Doc Code: PET.GREEN
Document Description: Petition for Green Tech Pilot

PTO/SB/420 (11-10)
Approved for use through 01/31/2011. OMB 0651-0062
U.S. Patent and Trademark Office; U. S. DEPARTMENT OF COMMERCE
Under the Paperwork Reduction Act of 1995, no persons are required to respond to a collection of information unless it displays a valid OMB control number.

PETITION TO MAKE SPECIAL UNDER THE GREEN TECHNOLOGY PILOT PROGRAM

Attorney Docket Number: 41929-501F01US	Application Number (if known): N/A	Filing date: February 9, 2011
First Named Inventor: Udi Meirav		
Title: Modular, High-Throughput Air Treatment System		

APPLICANT HEREBY REQUESTS TO PARTICIPATE IN THE GREEN TECHNOLOGY PILOT PROGRAM FOR THE ABOVE-IDENTIFIED APPLICATION. See Instruction Sheet on page 2.

This petition must be timely filed electronically using the USPTO electronic filing system, EFS-Web.

1. By filing this petition:

   Applicant is requesting early publication: Applicant hereby requests early publication under 37 CFR 1.219 and the publication fee set forth in 37 CFR 1.18(d) accompanies this request.

2. By filing this petition: applicant is agreeing to make an election without traverse in a telephonic interview and elect an invention that meets the eligibility requirements for the Green Technology Pilot Program, if the Office determines that the claims are not obviously directed to a single invention. See Instruction Sheet.

3. This request is accompanied by statements of special status for the eligibility requirement.

4. The application contains no more than three (3) independent claims and twenty (20) total claims.

5. The application does not contain any multiple dependent claims.

6. Other attachments: _____

Signature	Date 02/09/2011
Name (Print/Typed) Brad M. Scheller	Registration Number 61,022

Note: *Signatures of all the inventors or assignees of record of the entire interest or their representative(s) are required in accordance with 37 CFR 1.33 and 11.18. Please see 37 CFR 1.4(d) for the form of the signature. If necessary, submit multiple forms for more than one signature see below*.*

☐ *Total of _____ forms are submitted.

The information is required to obtain or retain a benefit by the public which is to file (and by the USPTO to process) an application. Confidentiality is governed by 35 U.S.C. 122 and 37 CFR 1.11 and 1.14. This collection is estimated to take 12 hours to complete, including gathering, preparing, and submitting the completed application form to the USPTO. Time will vary depending upon the individual case. Any comments on the amount of time you require to complete this form and/or suggestions for reducing this burden, should be sent to the Chief Information Officer, U.S. Patent and Trademark Office, U.S. Department of Commerce, P.O. Box 1450, Alexandria, VA 22313-1450. DO NOT SEND FEES OR COMPLETED FORMS TO THIS ADDRESS. **SEND TO: Commissioner for Patents, P.O. Box 1450, Alexandria, VA 22313-1450.**

If you need assistance in completing the form, call 1-800-PTO-9199 and select option 2.

E-Filed
Date of Deposit: February 9, 2011

Attorney Docket No. 41929-501F01US

IN THE UNITED STATES PATENT AND TRADEMARK OFFICE

Serial No.	:	N/A	TC/Art Unit	:	N/A
Applicants	:	Udi **MEIRAV** *et al.*	Conf. No.	:	N/A
Filing Date	:	HEREWITH	Examiner	:	N/A
Title	:	**MODULAR, HIGH-THROUGHPUT AIR TREATMENT SYSTEM**			

Commissioner for Patents
P.O. Box 1450
Alexandria, VA 22313-1450

STATEMENT OF SPECIAL STATUS

In accordance with the requirements for filing a Petition to Make Special under the Green Technology Pilot Program (the "Program"), as set forth in the December 8, 2009 Notice [Docket No. PTO–P–2009–0038] and Form PTO/SB/420, Applicants respectfully submit that the above-referenced application for a "Modular, High-Throughput Air Treatment System," concurrently filed herewith, materially contributes to the conservation of energy resources and is thus eligible for participation in the Program.

More specifically, Applicants have invented, and claim in their application, a modular air treatment apparatus that may be integrated within new or existing heating, ventilation and/or air conditioning ("HVAC") systems for removing contaminants, such as carbon dioxide (CO_2) or volatile organic compounds (VOCs), from indoor air. In contrast to conventional HVAC and/or air treatment systems that remove such contaminants by replacing some portion of the contaminated indoor air with fresh outside air, Applicants' modular air treatment apparatus removes such contaminants directly from the indoor air using discreet and scalable arrangements of adsorbent materials. By eliminating, or at least significantly reducing, the need to replace indoor air with fresh air from outside a building, vehicle or other structure, Applicants' invention eliminates and/or significantly reduces the amount of

energy that current HVAC and/or air treatment systems require to cool, dehumidify and/or heat such outside replacement air.

The claims recited in the present application are thus directed and materially contribute to the reduction of energy consumption in industrial equipment, such as HVAC systems and/or air treatment systems, used in small- or large-scale buildings, vehicles and other structures. Accordingly, the above-identified application qualifies for the special status required to make the application eligible for participation in the Program.

The Commissioner is hereby authorized to charge any additional fees that may be due, or credit any overpayment of the same, to Deposit Account No. **50-0311**, Reference No. **41929-501F01US**.

Respectfully submitted,

Dated: February 9, 2011

Brian P. Hopkins, Reg. No. 42,669
Brad M. Scheller, Reg. No. 61,022
Attorneys for Applicants
c/o MINTZ, LEVIN, *et al.*
666 Third Avenue-24th Floor
New York, New York 10017
Telephone: (212) 983-3000
Fax: (212) 983-3115
Customer No. 35437

UNITED STATES PATENT AND TRADEMARK OFFICE

UNITED STATES DEPARTMENT OF COMMERCE
United States Patent and Trademark Office
Address: COMMISSIONER FOR PATENTS
P.O. Box 1450
Alexandria, Virginia 22313-1450
www.uspto.gov

APPLICATION NO.	FILING DATE	FIRST NAMED INVENTOR	ATTORNEY DOCKET NO.	CONFIRMATION NO.
13/024,214	02/09/2011	Udi Meirav	41929-501F01US	1236

35437 7590 05/24/2011
MINTZ LEVIN COHN FERRIS GLOVSKY & POPEO
ONE FINANCIAL CENTER
BOSTON, MA 02111

EXAMINER

ART UNIT	PAPER NUMBER
3744	

MAIL DATE	DELIVERY MODE
05/24/2011	PAPER

Please find below and/or attached an Office communication concerning this application or proceeding.

The time period for reply, if any, is set in the attached communication.

UNITED STATES PATENT AND TRADEMARK OFFICE

Commissioner for Patents
United States Patent and Trademark Office
P.O. Box 1450
Alexandria, VA 22313-1450
www.uspto.gov

MINTZ LEVIN COHN FERRIS GLOVSKY & POPEO
ONE FINANCIAL CENTER
BOSTON MA 02111

In re Application of	:	
MEIRAV, UDI et al	:	DECISION ON PETITION
Application No. 13/024,214	:	TO MAKE SPECIAL UNDER
Filed: Feb. 9, 2011	:	THE GREEN TECHNOLOGY
Attorney Docket No. 41929-501F01US	:	PILOT PROGRAM

This is a decision on the petition under 37 CFR 1.102, filed Feb. 9, 2011, to make the above-identified application special under the pilot program for applications pertaining to Green Technologies as set forth in 74 Federal Register Notice 64666 (December 8, 2009) and amended by 75 Federal Register Notice 28554 (May 21, 2010) and 75 Federal Register Notice 69049 (November 10, 2010).

The petition is **dismissed**.

If reconsideration of this decision is desired, a petition for reconsideration must be filed within ONE (1) MONTH OR THIRTY (30) DAYS from the mail date of this decision, whichever is longer. No extension of this time limit can be granted under 37 CFR 1.136(a) or (b). The petition for reconsideration should include an exhaustive attempt to provide the lacking item(s) noted below, since, after a decision on the petition for reconsideration, no further reconsideration or review of the matter will be undertaken by the Director.

A grantable petition to make an application special under 37 CFR 1.102 and the pilot program as set forth in 74 FR 64666 must be directed to a nonprovisional application filed under 35 USC 111(a) or be a national stage entry under 35 USC 371, exclusive of any reissue applications.

In order to qualify for special status, the following requirements must be met. 1) The application must have no more than 3 independent claims and no more than 20 total claims. 2) The application must not contain any multiple dependent claims. 3) The petition must state the basis for seeking special status, i.e., the claimed invention either: A) materially enhances the quality of the environment or B) materially contributes to: i) the discovery or development of renewable energy resources, ii) the more efficient utilization and conservation of energy resources, or iii) greenhouse gas emission reduction. 4) If the disclosure is not clear on its face that the claimed invention materially contributes under category (A) or (B), the petition must be accompanied by a statement by the applicant, assignee, or an attorney/agent registered to practice before the

Office explaining how the materiality standard is met. 5) A statement that applicant will agree to make an election without traverse in a telephonic interview if a restriction requirement is made by the examiner. 6) The petition to make special must be filed electronically. 7) The petition must be filed at least one day prior to the date that a first Office Action appears in the Patent Application Information Retrieval (PAIR) system. 8) The petition must be accompanied by a request for early publication in compliance with 37 CFR 1.219 and include the publication fee as set forth in 37 CFR 1.18(d).

The requirement for a fee for consideration of the petition to make special for applications pertaining to Green Technologies has been waived.

In regard to item 4, petitioner should note that the instant petition includes a statement identifying the basis for the special status (i.e., whether the instant invention (1) materially enhances the quality of the environment or materially contributes to (2) development of renewable energy resources or energy conservation, or (3) greenhouse gas reduction) as required by sections II and III of the notice. However, as stated in the notice, applicant must also provide a statement pertaining to the materiality standard if the application disclosure is not clear on its face as to the materiality of the basis for the special status of the invention. This petition lacks such a statement and it is not agreed that the application on its face meets that materiality standard. Petitioner states that the claimed invention relates to reduction of energy consumption. This is not convincing. For example, it is not clear how the claimed conventional modular air filters will provide and enhance the quality of the environment or contribute to development of renewable energy resources or energy conservation or greenhouse gas reduction.

Any reconsideration of this decision should be submitted through the USPTO electronic filing system, EFS-Web, and selecting the document description of "Petition for Green Tech Pilot" on the EFS-Web screen.

Telephone inquiries concerning this decision should be directed to Henry C. Yuen at 571-272-4856.

The application will be forwarded to the Technology Center Art Unit 3744 for action in its regular turn.

/Henry C. Yuen/

Henry C. Yuen
Quality Assurance Specialist
Technology Center 3700

E-Filed
Date of Deposit: June 21, 2011

Attorney Docket No. 41929-501F01US

IN THE UNITED STATES PATENT AND TRADEMARK OFFICE

Serial No.	:	13/024,214	TC/Art Unit	:	3744
Applicants	:	Udi **MEIRAV** *et al.*	Conf. No.	:	1236
Filing Date	:	February 9, 2011	Examiner	:	N/A
Title	:	**MODULAR, HIGH-THROUGHPUT AIR TREATMENT SYSTEM**			

MAIL STOP PETITION
Commissioner for Patents
P.O. Box 1450
Alexandria, VA 22313-1450

PETITION FOR RECONSIDERATION OF DECISION
ON PETITION TO MAKE SPECIAL

In response to the Decision on Petition by the Patent Office, mailed on May 24, 2011 (the "Decision"), dismissing Applicants' February 9, 2011 Petition to Make Special Under the Green Technology Pilot Program, Applicants hereby file this Petition for Reconsideration to have the Patent Office reconsider the Decision in view of the revised statement provided below. This Petition is being filed within 30 days from the May 24, 2011 mailing date of the Decision and, as such, is timely.

Applicants electronically filed their original Petition to Make Special Under the Green Technology Pilot Program and accompanying Statement of Special Status in the above-identified application on February 9, 2011. Copies of the Petition and Statement are attached as **Exhibit A**.

In dismissing Applicants' Petition, the Decision on Petition states that Applicants' submission fails to satisfy all the requirements which must be met to qualify for special status. The Decision specifically indicates that Applicants' Statement does not satisfy the materiality standard set forth in 74 Federal Register Notice 64666 (December 8, 2009) and amended by 75 Federal Register Notice 28554 (May 21, 2010) and 75 Federal Register Notice 69049 (November 10, 2010):

> In regard to item 4, petitioner should note that the instant petition includes a statement identifying the basis for the special status (i.e., whether the instant invention (1) materially enhances the quality of the environment or materially contributes to (2) development of renewable energy resources or energy conservation, or (3) greenhouse gas reduction) as required by sections II and III of the notice. However, as stated in the notice, applicant must also provide a statement pertaining to the materiality standard if the application disclosure is not clear on its face as to the materiality of the basis for the special status of the invention. This petition lacks such a statement and it is not agreed that the application on its face meets that materiality standard. Petitioner states that the claimed invention relates to reduction of energy consumption. This is not convincing. For example, it is not clear how the claimed conventional modular air filters will provide and enhance the quality of the environment or contribute to development of renewable energy resources or energy conservation or greenhouse gas reduction.

In response to the Office's indication that it is not convinced that the methods, devices and systems of the subject application relate to the reduction of energy consumption, Applicants provide below further explanation as to:

- why the disclosed methods, devices and systems "*materially contribute*" to the "*more efficient utilization and conversation of energy resources*";
- how the disclosed methods, devices and systems will provide and enhance the quality of the environment; and
- how and why the disclosed methods, devices and systems will significantly contribute to energy conservation.

All modern buildings utilize Heating Ventilating and Air Conditioning (HVAC) systems to maintain the comfort, well-being and productivity of their inhabitants. Indeed, not only the developed world but a rapidly increasing percentage of the emerging economies are increasingly dependent on HVAC systems for their productivity and lifestyle. HVAC systems not only modify the temperature and humidity of the air but also need to maintain indoor air quality (IAQ) with regard to various contaminants, including gases, vapors, particles and microbes. These contaminants are released inside a building by its human occupants as well as its inanimate objects. Unlike particles, microbes and some vapors that can be filtered, the way unwanted gases are removed is by continually exhausting the indoor air and replacing it with fresh outside air.

HVAC systems are the largest contributors to the energy budget of commercial buildings and one of the largest loads on the entire electrical grid, especially during peak hours. Reducing

the power requirements of an HVAC system is thus an important goal in the overall energy efficiency program of our economy.

The subject matter disclosed and claimed in Applicants' application is aimed at *significantly* reducing the power consumption of HVAC systems in commercial buildings and other structures. The key to the savings opportunity provided by the methods, devices and systems of the subject application begins with understanding the way HVAC systems address IAQ issues. Air circulates throughout the various parts of a building by means of ducts and fans. The air gets collected by manifolds or plenums and re-circulates though a central air handling unit where it is cooled or heated, and filtered. As air is re-circulated, however, its quality degrades in large part due to the presence and respiration of people in the building: carbon dioxide (CO_2) accumulates and oxygen (O_2) is depleted. Other organic vapors, collectively referred to as volatile organic compounds, or VOCs, also accumulate. To restore wholesome air quality, current HVAC systems are designed to gradually replace the indoor air with fresh outside air frequent in significant amounts. Typically, the *entire volume of air* in a building is replaced *10 – 20 times per day*. This continual replacement of air results in a significant thermal load on the HVAC system; indeed, in warmer humid climates, air replacement is the single largest cooling load and can account for 40-50% of the entire energy load of an HVAC system. Thus, reducing the rate of air replacement can bring enormous energy savings, both at the level of an individual building and at the level of the entire electric grid.

Accordingly, the subject application describes methods, systems and devices directed to reducing the rate of air replacement and associated energy waste, while also maintaining optimal IAQ levels. Applicants' approach includes intercepting circulating air flow near a central air handling unit, diverting at least part of that air flow through special reusable adsorbents to at least partially remove CO_2 and VOCs and an optional module that distills oxygen from fresh outside air and injects small amounts of concentrated oxygen to replenish inside oxygen levels. Although some air may still be replaced with fresh outside air, the methods, systems and devices of the instant application provide for the replacement of the entire volume of air in a building at a much lower rate of 1 to 2 times per day, instead of 10 to 20 times, providing an 80% reduction of the heat load associated with air replacement while maintaining very good IAQ levels. The

technology disclosed in the instant application can be integrated – as an add-on modular retrofit – into most existing central HVAC systems to provide immediate reduction in power consumption that can be greater than 40% during peak hours.

The Energy Savings:

According to the U.S. Energy Information Administration's most recent available Commercial Building Energy Consumption Survey (www.eia.doe.gov/emeu/cbecs), there are approximately 5 million commercial buildings in the U.S., of which more than 100,000 are considered "large" (over 100,000 square feet). Cooling alone accounts for 400 billion kWh per year. Applicants estimate that 25-30% of this annual energy consumption, namely ***100 - 120 billion kWh*** per year, is due to the thermal load of air replacement. Using the technology disclosed in Applicants' subject application, most of that energy waste can be saved, without any compromise to IAQ levels.

To put these savings in perspective, 100 billion kWh per year is equivalent to the output of more than ***30 mid-size power plants***. From a user standpoint, while kWh costs vary regionally and temporally, there is well over ***$10 billion*** of potential energy savings to be had by implementing the technology disclosed in Applicants' application, *just in the U.S.* The benefits of reducing the thermal loads imposed by HVAC systems is far-reaching, from cost savings for businesses and building owners/operators, to the energy infrastructure, the overall economy and the environment.

Applicants note two additional important points regarding the relevance of the subject matter of the instant application to the nation's energy consumption:

1. While the sheer amount of ***kWh*** and dollars saved is impressive in and of itself, this still understates the overall economic *and* environmental benefit. Because the nature and impact of Applicants' technology is commensurate with outdoor air temperatures and building occupancy, much of the resulting energy savings will occur during peak daytime hours when energy costs are highest, resulting in maximum energy savings on the very hottest days when the electric grid is pushed to its limits and often subject to failure. Accordingly, the benefit of the Applicants' disclosed methods, systems and devices is not only in reducing fossil fuel

consumption and greenhouse gas emissions, but also in relief for ***generation and transmission infrastructure*** and staving off capital requirements for grid capacity expansion.

2. There are many energy saving technologies or renewable energy technologies that require very large upfront investments which would take many years to recoup, and as a result society has been slow to adopt them. Applicants' disclosed technology is different. The estimated cost of implementing the systems and/or devices described in the instant application would be rather modest and allow for a short timeline, possibly less than a year, to recoup the investment in terms of energy savings. Applicants' detailed analysis indicates that in a building designed for 1,000 occupants, the energy savings would be approximately ***$100,000 per year*** (depending on geography and climate). A system according to the subject matter of the instant application could be manufactured and delivered for less than half that amount. Even with installation expenses and profit margins, such a system can "pay for itself" in a year, thus allowing relatively rapid and widespread adoption with all the ensuing economic and environmental benefits.

In summary, the methods, devices and systems of the subject application can have a direct impact measured in over $10 billion and 100 billion kWh in the U.S. alone, substantially more around the world, and furthermore has attractive near-term adoption economics and a particularly strong positive impact on peak power consumption, making it an ideal candidate for participation in the Green Technology Pilot Program.

The Commissioner is hereby authorized to charge any additional fees that may be due, or credit any overpayment of the same, to Deposit Account No. **50-0311**, Attorney Reference No. **41929-501F01US**.

Respectfully submitted,

Dated: June 21, 2011

Brian P. Hopkins, Reg. No. 42,669
Brad M. Scheller, Reg. No. 61,022
Attorneys for Applicants
c/o MINTZ LEVIN *et al.*
666 Third Avenue-24th Floor
New York, New York 10017
Telephone: (212) 983-3000
Fax: (212) 983-3115
Customer No. 35437

E-Filed
Date of Deposit: June 21, 2011

Attorney Docket No.: 41929-501F01US

Exhibit A

Applicants: Udi MEIRAV et al.

Serial No. 13/024,214

Electronic Acknowledgement Receipt

EFS ID:	9412773
Application Number:	13024214
International Application Number:	
Confirmation Number:	1236
Title of Invention:	Modular, High-Throughput Air Treatment System
First Named Inventor/Applicant Name:	Udi Meirav
Customer Number:	35437
Filer:	Brad Michael Scheller
Filer Authorized By:	
Attorney Docket Number:	41929-501F01US
Receipt Date:	09-FEB-2011
Filing Date:	
Time Stamp:	18:46:17
Application Type:	Utility under 35 USC 111(a)

Payment information:

Submitted with Payment	yes
Payment Type	Credit Card
Payment was successfully received in RAM	$762
RAM confirmation Number	5277
Deposit Account	500311
Authorized User	SCHELLER,BRAD

The Director of the USPTO is hereby authorized to charge indicated fees and credit any overpayment as follows:

Charge any Additional Fees required under 37 C.F.R. Section 1.17 (Patent application and reexamination processing fees)

Charge any Additional Fees required under 37 C.F.R. Section 1.21 (Miscellaneous fees and charges)

File Listing:

Document Number	Document Description	File Name	File Size(Bytes)/ Message Digest	Multi Part /.zip	Pages (if appl.)
1	Miscellaneous Incoming Letter	Transmittal.pdf	47126 cde7da32c77a9099a408dfb95dad19f2267da820	no	2
Warnings:					
Information:					
2		Specification.pdf	1526317 611e9489a2893b034ae7339712b2aebc8f524778	yes	28

Multipart Description/PDF files in .zip description

Document Description	Start	End
Specification	1	22
Claims	23	27
Abstract	28	28

Warnings:					
Information:					
3	Application Data Sheet	Application_Data_Sheet.pdf	21386 5f31dc106322bde02f03f2c904c1b43a78f1a916	no	1
Warnings:					
Information:					
This is not an USPTO supplied ADS fillable form					
4	Oath or Declaration filed	Combined_Declaration_and_Power_of_Attorney.pdf	166862 3bca0bfda2ba5aa333be5fda6cda9fb80e819163	no	6
Warnings:					
Information:					
5	Petition for Green Tech Pilot	Petition_to_Make_Special.pdf	40954 3a0946623ad03355f72acb20cde4bb0f955ad009	no	1
Warnings:					
Information:					
6	Petition for Green Tech Pilot	Statement_of_Special_Status.pdf	54450 fb27585a18efbf2a8bb5ba40a73ddbc11b59ca1d	no	2
Warnings:					
Information:					

7	Drawings-only black and white line drawings	Drawings.pdf	1298242 11322ce58ad5cb73c304b216f41d5bc8bb8df469	no	14
Warnings:					
Information:					
8	Fee Worksheet (PTO-875)	fee-info.pdf	36253 411408acac445f994153888ddd56c69ec0020491	no	2
Warnings:					
Information:					
			Total Files Size (in bytes):	3191590	

This Acknowledgement Receipt evidences receipt on the noted date by the USPTO of the indicated documents, characterized by the applicant, and including page counts, where applicable. It serves as evidence of receipt similar to a Post Card, as described in MPEP 503.

<u>New Applications Under 35 U.S.C. 111</u>
If a new application is being filed and the application includes the necessary components for a filing date (see 37 CFR 1.53(b)-(d) and MPEP 506), a Filing Receipt (37 CFR 1.54) will be issued in due course and the date shown on this Acknowledgement Receipt will establish the filing date of the application.

<u>National Stage of an International Application under 35 U.S.C. 371</u>
If a timely submission to enter the national stage of an international application is compliant with the conditions of 35 U.S.C. 371 and other applicable requirements a Form PCT/DO/EO/903 indicating acceptance of the application as a national stage submission under 35 U.S.C. 371 will be issued in addition to the Filing Receipt, in due course.

<u>New International Application Filed with the USPTO as a Receiving Office</u>
If a new international application is being filed and the international application includes the necessary components for an international filing date (see PCT Article 11 and MPEP 1810), a Notification of the International Application Number and of the International Filing Date (Form PCT/RO/105) will be issued in due course, subject to prescriptions concerning national security, and the date shown on this Acknowledgement Receipt will establish the international filing date of the application.

Doc Code: PET.GREEN
Document Description: Petition for Green Tech Pilot

PTO/SB/420 (11-10)
Approved for use through 01/31/2011. OMB 0651-0062
U.S. Patent and Trademark Office; U. S. DEPARTMENT OF COMMERCE
Under the Paperwork Reduction Act of 1995, no persons are required to respond to a collection of information unless it displays a valid OMB control number.

PETITION TO MAKE SPECIAL UNDER THE GREEN TECHNOLOGY PILOT PROGRAM

Attorney Docket Number:	41929-501F01US	Application Number (If known):	N/A	Filing date:	February 9, 2011
First Named Inventor:	Udi Meirav				
Title:	Modular, High-Throughput Air Treatment System				

APPLICANT HEREBY REQUESTS TO PARTICIPATE IN THE GREEN TECHNOLOGY PILOT PROGRAM FOR THE ABOVE-IDENTIFIED APPLICATION. See Instruction Sheet on page 2.

This petition must be timely filed electronically using the USPTO electronic filing system, EFS-Web.

1. By filing this petition:

   Applicant is requesting early publication: Applicant hereby requests early publication under 37 CFR 1.219 and the publication fee set forth in 37 CFR 1.18(d) accompanies this request.

2. By filing this petition: applicant is agreeing to make an election without traverse in a telephonic interview and elect an invention that meets the eligibility requirements for the Green Technology Pilot Program, if the Office determines that the claims are not obviously directed to a single invention. See Instruction Sheet.

3. This request is accompanied by statements of special status for the eligibility requirement.

4. The application contains no more than three (3) independent claims and twenty (20) total claims.

5. The application does not contain any multiple dependent claims.

6. Other attachments: _____

Signature	Brad M. Scheller	Date	02/09/2011
Name (Print/Typed)	Brad M. Scheller	Registration Number	61,022

Note: *Signatures of all the inventors or assignees of record of the entire interest or their representative(s) are required in accordance with 37 CFR 1.33 and 11.18. Please see 37 CFR 1.4(d) for the form of the signature. If necessary, submit multiple forms for more than one signature see below*.*

☐ *Total of _____ forms are submitted.

The information is required to obtain or retain a benefit by the public which is to file (and by the USPTO to process) an application. Confidentiality is governed by 35 U.S.C. 122 and 37 CFR 1.11 and 1.14. This collection is estimated to take 12 hours to complete, including gathering, preparing, and submitting the completed application form to the USPTO. Time will vary depending upon the individual case. Any comments on the amount of time you require to complete this form and/or suggestions for reducing this burden, should be sent to the Chief Information Officer, U.S. Patent and Trademark Office, U.S. Department of Commerce, P.O. Box 1450, Alexandria, VA 22313-1450. DO NOT SEND FEES OR COMPLETED FORMS TO THIS ADDRESS. **SEND TO: Commissioner for Patents, P.O. Box 1450, Alexandria, VA 22313-1450.**

If you need assistance in completing the form, call 1-800-PTO-9199 and select option 2.

E-Filed
Date of Deposit: February 9, 2011 Attorney Docket No. 41929-501F01US

IN THE UNITED STATES PATENT AND TRADEMARK OFFICE

Serial No.	:	N/A	TC/Art Unit	:	N/A
Applicants	:	Udi **MEIRAV** *et al.*	Conf. No.	:	N/A
Filing Date	:	HEREWITH	Examiner	:	N/A
Title	:	**MODULAR, HIGH-THROUGHPUT AIR TREATMENT SYSTEM**			

Commissioner for Patents
P.O. Box 1450
Alexandria, VA 22313-1450

STATEMENT OF SPECIAL STATUS

In accordance with the requirements for filing a Petition to Make Special under the Green Technology Pilot Program (the "Program"), as set forth in the December 8, 2009 Notice [Docket No. PTO–P–2009–0038] and Form PTO/SB/420, Applicants respectfully submit that the above-referenced application for a "Modular, High-Throughput Air Treatment System," concurrently filed herewith, materially contributes to the conservation of energy resources and is thus eligible for participation in the Program.

More specifically, Applicants have invented, and claim in their application, a modular air treatment apparatus that may be integrated within new or existing heating, ventilation and/or air conditioning ("HVAC") systems for removing contaminants, such as carbon dioxide (CO_2) or volatile organic compounds (VOCs), from indoor air. In contrast to conventional HVAC and/or air treatment systems that remove such contaminants by replacing some portion of the contaminated indoor air with fresh outside air, Applicants' modular air treatment apparatus removes such contaminants directly from the indoor air using discreet and scalable arrangements of adsorbent materials. By eliminating, or at least significantly reducing, the need to replace indoor air with fresh air from outside a building, vehicle or other structure, Applicants' invention eliminates and/or significantly reduces the amount of

energy that current HVAC and/or air treatment systems require to cool, dehumidify and/or heat such outside replacement air.

The claims recited in the present application are thus directed and materially contribute to the reduction of energy consumption in industrial equipment, such as HVAC systems and/or air treatment systems, used in small- or large-scale buildings, vehicles and other structures. Accordingly, the above-identified application qualifies for the special status required to make the application eligible for participation in the Program.

The Commissioner is hereby authorized to charge any additional fees that may be due, or credit any overpayment of the same, to Deposit Account No. **50-0311**, Reference No. **41929-501F01US**.

Respectfully submitted,

Dated: February 9, 2011

Brian P. Hopkins, Reg. No. 42,669
Brad M. Scheller, Reg. No. 61,022
Attorneys for Applicants
c/o MINTZ, LEVIN, *et al.*
666 Third Avenue-24th Floor
New York, New York 10017
Telephone: (212) 983-3000
Fax: (212) 983-3115
Customer No. 35437

UNITED STATES PATENT AND TRADEMARK OFFICE

UNITED STATES DEPARTMENT OF COMMERCE
United States Patent and Trademark Office
Address: COMMISSIONER FOR PATENTS
P.O. Box 1450
Alexandria, Virginia 22313-1450
www.uspto.gov

APPLICATION NO.	FILING DATE	FIRST NAMED INVENTOR	ATTORNEY DOCKET NO.	CONFIRMATION NO.
13/024,214	02/09/2011	Udi Meirav	41929-501F01US	1236

35437 7590 07/01/2011
MINTZ LEVIN COHN FERRIS GLOVSKY & POPEO
ONE FINANCIAL CENTER
BOSTON, MA 02111

EXAMINER

ART UNIT	PAPER NUMBER
3744	

MAIL DATE	DELIVERY MODE
07/01/2011	PAPER

Please find below and/or attached an Office communication concerning this application or proceeding.

The time period for reply, if any, is set in the attached communication.

UNITED STATES PATENT AND TRADEMARK OFFICE

Commissioner for Patents
United States Patent and Trademark Office
P.O. Box 1450
Alexandria, VA 22313-1450
www.uspto.gov

MINTZ LEVIN COHN FERRIS GLOVSKY & POPEO 7/1/11
ONE FINANCIAL CENTER
BOSTON MA 02111

In re Application of	:	
Meirav et al.	:	DECISION ON PETITION
Application No. 13/024,214	:	TO MAKE SPECIAL UNDER
Filed: 2/9/2011	:	THE GREEN TECHNOLOGY
Attorney Docket No. **41929-501F01US**	:	PILOT PROGRAM

This is a decision on the request for reconsideration, filed 6/21/2011, to make the above-identified application special under the pilot program for applications pertaining to Green Technologies as set forth in 74 Federal Register Notice 64666 (December 8, 2009) and amended by 75 Federal Register Notice 28554 (May 21, 2010) and 75 Federal Register Notice 69049 (November 10, 2010).

The petition is **GRANTED**.

A grantable petition to make an application special under 37 CFR 1.102 and the pilot program as set forth in 74 FR 64666 must be directed to a nonprovisional application filed under 35 USC 111(a) or be a national stage entry under 35 USC 371, exclusive of any reissue applications.

In order to qualify for special status, the following requirements must be met. 1) The application must have no more than 3 independent claims and no more than 20 total claims. 2) The application must not contain any multiple dependent claims. 3) The petition must state the basis for seeking special status, i.e., the claimed invention either: A) materially enhances the quality of the environment or B) materially contributes to: i) the discovery or development of renewable energy resources, ii) the more efficient utilization and conservation of energy resources, or iii) greenhouse gas emission reduction. 4) If the disclosure is not clear on its face that the claimed invention materially contributes under category (A) or (B), the petition must be accompanied by a statement by the applicant, assignee, or an attorney/agent registered to practice before the Office explaining how the materiality standard is met. 5) A statement that applicant will agree to make an election without traverse in a telephonic interview if a restriction requirement is made by the examiner. 6) The petition to make special must be filed electronically. 7) The petition must be filed at least one day prior to the date that a first Office Action appears in the Patent Application Information Retrieval (PAIR) system. 8) The petition must be accompanied by a request for early publication in compliance with 37 CFR 1.219 and include the publication fee as set forth in 37 CFR 1.18(d).

The requirement for a fee for consideration of the petition to make special for applications pertaining to Green Technologies has been waived.

The instant petition complies with items 1 – 8 above. Accordingly, the above-identified application has been accorded "special" status.

Telephone inquires concerning this decision should be directed to Tom Dunn at 571-272-1171.

The application is being forwarded to the Technology Center Art Unit 3744 for action on the merits commensurate with this decision.

/Tom Dunn/

Tom Dunn
Quality Assurance Specialist
Technology Center 1700

UNITED STATES PATENT AND TRADEMARK OFFICE

Commissioner for Patents
United States Patent and Trademark Office
P.O. Box 1450
Alexandria, VA 22313-1450
www.uspto.gov

Rutan & Tucker, LLP.
611 ANTON BLVD
SUITE 1400
COSTA MESA CA 92626

MAILED

FEB 27 2012

OFFICE OF PETITIONS

In re Application of
Vishal Kakkad
Application No. 13/024,247
Filed: February 9, 2011
Attorney Docket No. **021404-0033P**

DECISION ON PETITION
TO WITHDRAW
FROM RECORD

This is a decision on the Request to Withdraw as attorney or agent of record under 37 CFR § 1.36(b), filed February 13, 2012.

The request is **NOT APPROVED**.

The request cannot be approved because it lacks the name of the first inventor or the assignee of record that is associated with the address listed in the request. Therefore, the change of correspondence address is considered improper.

The Office will only accept correspondence address changes to the most current address information provided for the assignee of the entire interest *who properly became of record under 37 CFR 3.71,* or, if no assignee of the entire interest has properly been made of record, the most current address information provided for the first named inventor. 37 CFR 3.71(c) states:

> *An assignee becomes of record either in a national patent application or a reexamination proceeding by filing a statement in compliance with § 3.73(b) that is signed by a party who is authorized to act on behalf of the assignee.*

The assignee must establish its ownership of the patent to the satisfaction of the Director. In this regard, the statement under 37 CFR 3.73(b) must have either: (i) documentary evidence of a chain of title from the original owner to the assignee (*e.g.*, copy of an executed assignment), and a statement affirming that the documentary evidence of the chain of title from the original owner to the assignee was or concurrently is being submitted for recordation pursuant to § 3.11; or (ii) a statement specifying where documentary evidence of a chain of title from the original owner to the assignee is recorded in the assignment records of the Office (*e.g.*, reel and frame number).

All future communications from the Office will continue to be directed to the above-listed address until otherwise notified by applicant.

Telephone inquires concerning this decision should be directed to the undersigned at 571-272-4584.

/JoAnne Burke/
JoAnne Burke
Petitions Examiner
Office of Petitions

UNITED STATES PATENT AND TRADEMARK OFFICE

Commissioner for Patents
United States Patent and Trademark Office
P.O. Box 1450
Alexandria, VA 22313-1450
www.uspto.gov

MAILED
MAY 03 2011
OFFICE OF PETITIONS

AMPACC Law Group, PLLC
6100 219th Street SW, Suite 580
Mountlake Terrace WA 98043

In re Application of	:	
Masahiro Hoshino et al.	:	
Application No. 13/024,292	:	DECISION ON PETITION
Filed: February 9, 2011	:	TO MAKE SPECIAL UNDER
Attorney Docket No. 908RO-000220US	:	37 CFR 1.102(c)(1)
	:	

This is a decision on the petition under 37 CFR 1.102(c)(1), filed March 1, 2011, to make the above-identified application special based on applicant's age as set forth in M.P.E.P. § 708.02, Section IV.

The petition is **GRANTED.**

A grantable petition to make an application special under 37 CFR 1.102(c)(1) and MPEP § 708.02, Section IV: Applicant's Age must be accompanied by evidence showing that at least one of the applicants is 65 years of age, or more, such as a birth certificate or a statement by applicant. No fee is required

The instant petition includes a statement by an attorney on behalf of inventor Masahiro Hoshino, attesting to his/her age. The above-identified application has been accorded "special" status.

Telephone inquiries concerning this decision should be directed to Kimberly Inabinet at 571-272-4618.

All other inquiries concerning either the examination or status of the application should be directed to the Technology Center.

The application is being forwarded to the Technology Center Art Unit 1736 for action on the merits commensurate with this decision.

/Kimberly Inabinet/

Kimberly Inabinet
Petitions Examiner
Office of Petitions

UNITED STATES PATENT AND TRADEMARK OFFICE

UNITED STATES DEPARTMENT OF COMMERCE
United States Patent and Trademark Office
Address: COMMISSIONER FOR PATENTS
P.O. Box 1450
Alexandria, Virginia 22313-1450
www.uspto.gov

APPLICATION NO.	FILING DATE	FIRST NAMED INVENTOR	ATTORNEY DOCKET NO.	CONFIRMATION NO.
13/024,293	02/09/2011	Roger Wen-Yi Hsu		1401

69107 7590 04/13/2011
AGNEW INTERNATIONAL
PATENT & TRADEMARK LAW FIRM
7700 Irvine Center Drive
SUITE 800
Irvine, CA 92618

EXAMINER
COLLINS, DARRYL J

ART UNIT	PAPER NUMBER
2873	

MAIL DATE	DELIVERY MODE
04/13/2011	PAPER

Please find below and/or attached an Office communication concerning this application or proceeding.

The time period for reply, if any, is set in the attached communication.

UNITED STATES PATENT AND TRADEMARK OFFICE

Commissioner for Patents
United States Patent and Trademark Office
P.O. Box 1450
Alexandria, VA 22313-1450
www.uspto.gov

4/13/11

CST

In re application of Roger Wen-Yi Hsu Serial No. 13/024,293 Filed: February 9, 2011 For: METHOD AND APPARATUS FOR MAKING RETARDER IN STERIOSCOPIC GLASS	: : : : : : :	DECISION ON PETITION TO MAKE SPECIAL

This is a decision on the petition filed on February 9, 2011 to make the above-identified application special under the accelerated examination program.

The petition to make the application special is **DISMISSED.**

REGULATION AND PRACTICE

A grantable petition to make special under 37 C.F.R. § 1.102(d) and pursuant to the "Change to Practice for Petitions in Patent Applications to Make Special and for Accelerated Examination" published in the Federal Register on June 26, 2006 (71 Fed. Reg. 36323), must satisfy the following conditions:

I. Conditions Regarding the Application:

1. the application must be a non-reissue utility or design application filed under 37 CFR 1.111(a);
2. the application, the petition and the required fees must be filed electronically using the USPTO's electronic filing system (EFS), or EFS-web; if not filed electronically, a statement asserting that EFS and EFS-web were not available during the normal business hours;
3. at the time of filing, the application must be complete under 37 CFR 1.51 and in condition for examination;
4. the application must contain three or fewer independent claims and twenty or fewer total claims and the claims must be directed to a single invention.

II. Conditions Regarding the Petition:

The petition must:

1. be filed with the application;

2. include a statement that applicant agrees not to separately argue the patentability of any dependent claim during any appeal in the application;

3. include a statement that applicant agrees to make an election without traverse in a telephone interview;

4. include a statement that applicant agrees to conduct such an interview when requested by the examiner;

5. include a statement, made based on a good faith belief, that a preexamination search in compliance with the following requirements, was conducted, including an identification of the field of search by United States class and subclass, where applicable, and for database searches, the search logic or chemical structure or sequence used as a query, the name of the file(s) searched and the database service, and the date of the search.

The preexamination search must:

5.1 involve U.S. patents and patent application publications, foreign patent documents, and non-patent literature, unless the applicant can justify with reasonable certainty that no references more pertinent than those already identified are likely to be found in the eliminated sources and includes such a justification with this statement;

5.2. be directed to the claimed invention and encompass all of the features of the claims, giving the claims the broadest reasonable interpretation;

5.3. encompass the disclosed features that may be claimed.

6. must provide in support of the petition an accelerated examination support document.

An accelerated examination support document must include:

6.1. an information disclosure statement (IDS) in compliance with 37 CFR 1.98 citing each reference deemed most closely related to the subject matter of each of the claims;

6.2. an identification of all the limitations in the claims that are disclosed by the reference specifying where the limitation is disclosed in the cited reference;

6.3. a detailed explanation of how each of the claims are patentable over the references cited with particularity required by 37 CFR 1.111(b) and (c);

6.4. a concise statement of the utility of the invention as defined in each of the independent claims (unless the application is a design application);

6.5. a showing of where each limitation of the claims finds support under 35 USC 112, first paragraph, in the written description of the specification. If applicable, the showing must also identify: (1) each means- (or step) plus-function claim element that invokes consideration under 35 USC 112, sixth paragraph; and (2) the structure, material, or acts in the specification that corresponds to each means- (or step) plus-function claim element that invokes consideration under 35 USC 112, sixth paragraph; if the application claims the benefit of one or more applications under title 35, United States Code, the showing must also include where each limitation of the claims finds support under 35 USC 112, first paragraph, in each such application in which such supports exists;

6.6. an identification of any cited references that may be disqualified under 35 USC 103(c).

REVIEW OF FACTS

The conditions regarding the application (section I, subsections 1-4) discussed above are considered to have been met. Additionally, the conditions regarding the petition, section II, subsections 1-4 are considered to have been met. However, the petition fails to comply with condition II, subsections 5 and 6.

It appears that the search is incomplete. Note that a search in Class 264, subclasses 2.7, 288.4, 289.6, 290.2, 320 and 345 is also required.

Only three of the references listed on the 6 page Information Disclosure Statement (IDS) have been discussed. However, there is a presumption that each of the cited references is considered most relevant to the claimed invention and that an identification of where all of the limitations in the claims that are disclosed in the references is required.

Applicant is encouraged to review the Frequently Asked Questions concerning the Accelerated Examination Program posted on www.uspto.gov. Specifically, note the question and answer reproduced below:

IDS 3. Will the Office accept an accelerated examination support document (AESD) that contains a list of references in the information disclosure statement (IDS) of the AESD, but does not include any identification and explanation for those references that are not required to be submitted in the IDS of the AESD (*i.e.*, references that are not most closely related to the subject matter of each of the claims)?

No, the AESD will be deemed insufficient for lack of identification and explanation. The applicant will be notified of the defects and the application will remain in the status of a new application awaiting action in its regular turn. The applicant will be given a time period of one month, without any extension of time under 37 CFR §1.136(a), to perfect the petition.

If applicant wishes to cite references that are not required in an AESD for the examiner to consider, applicant may submit such references in a separate IDS in compliance with 37 CFR §1.97 and §1.98. Applicant should clearly identify the IDS of the AESD that is in support of the petition to make special and, similarly, applicant should clearly identify the separate IDS that is not in support of the petition. Consistent with 37 CFR §10.18, any reference submitted in a separate IDS that is not part of an AESD will be treated as a representation by applicant to the USPTO that no reference submitted in the separate IDS is deemed closer to the subject matter of at least one claim than the references provided in the AESD.

It is required that petitioner provide a showing of where each limitation of the claims finds support under 35 USC 112, first paragraph, in the written description of provisional applications 61/302,553; 61/313,598 and 61/334,856 as applicant has claimed priority to these applications. Note that in the first paragraph of the present specification, provisional application 61/313,598 is listed twice, each time with a different filing date.

Therefore, the petition fails to meet the required conditions to be accorded special status under the accelerated examination procedure.

DECISION

For the above-stated reasons, the petition is dismissed. The application will therefore be taken up by the examiner in its regular turn.

Petitioner is given a single opportunity to perfect the petition. Any request for reconsideration of this decision must be submitted within 1 (one) month or 30 (thirty) days, whichever is longer, (no extension of time under 37 CFR 1.136(a)) from the date of this decision in order to be considered timely. Any request for reconsideration must address the deficiencies indicated above.

Petitioner is reminded that, upon granting of the special status of the application on request for reconsideration, the application will be processed expeditiously. However, due to the dismissal of the instant petition, examination may not be completed within twelve months of the filing date of the application.

Any inquiry regarding this decision should be directed to Christine Tierney, Quality Assurance Specialist, at (571) 272-1055.

/Christine Tierney/

Christine Tierney
Quality Assurance Specialist
Technology Center 1700

UNITED STATES PATENT AND TRADEMARK OFFICE

UNITED STATES DEPARTMENT OF COMMERCE
United States Patent and Trademark Office
Address: COMMISSIONER FOR PATENTS
P.O. Box 1450
Alexandria, Virginia 22313-1450
www.uspto.gov

APPLICATION NO.	FILING DATE	FIRST NAMED INVENTOR	ATTORNEY DOCKET NO.	CONFIRMATION NO.
13/024,293	02/09/2011	Roger Wen-Yi Hsu		1401

69107 7590 05/24/2011
AGNEW INTERNATIONAL
PATENT & TRADEMARK LAW FIRM
7700 Irvine Center Drive
SUITE 800
Irvine, CA 92618

EXAMINER
WOLLSCHLAGER, JEFFREY MICHAEL

ART UNIT	PAPER NUMBER
1742	

MAIL DATE	DELIVERY MODE
05/24/2011	PAPER

Please find below and/or attached an Office communication concerning this application or proceeding.

The time period for reply, if any, is set in the attached communication.

UNITED STATES PATENT AND TRADEMARK OFFICE

Commissioner for Patents
United States Patent and Trademark Office
P.O. Box 1450
Alexandria, VA 22313-1450
www.uspto.gov

CST

MAY 24 2011

In re application of Roger Wen-Yi Hsu Serial No. 13/024,293 Filed: February 9, 2011 For: METHOD AND APPARATUS FOR MAKING RETARDER IN STERIOSCOPIC GLASS	: : : : : : :	DECISION ON PETITION TO MAKE SPECIAL

A decision dismissing the petition to make the above-identified application special was mailed on April 13, 2011. The decision set a non-extendable time period of one month or 30 (thirty) days, whichever is longer, from its mailing date to correct the deficiency/deficiencies in the petition.

As of May 20, 2011, neither a reply nor a renewed petition has been received. Accordingly, the application is no longer eligible for the accelerated examination program.

The application will remain in its regular status and will be taken up by the examiner for action in its regular turn.

Petitioner is reminded that a single opportunity to perfect the petition is given. Therefore, further petitions for accelerated examination in this application will not be entertained.

Any inquiry regarding this decision should be directed to Christine Tierney, Quality Assurance Specialist, at (571) 272-1055.

/Christine Tierney/

Christine Tierney
Quality Assurance Specialist
Technology Center 1700

UNITED STATES PATENT AND TRADEMARK OFFICE

Commissioner for Patents
United States Patent and Trademark Office
P.O. Box 1450
Alexandria, VA 22313-1450
www.uspto.gov

FROMMER LAWRENCE & HAUG
745 FIFTH AVENUE- 10TH FL.
NEW YORK, NY 10151

MAILED

JUN 10 2011

OFFICE OF PETITIONS

In re Application of

John W. Holiday
Application No. 13/024,298
Filed: February 9, 2011
Attorney Docket No. 544974-207.2

DECISION ON PETITION
TO MAKE SPECIAL UNDER
37 CFR 1.102(c)(1)

This is a decision on the petition under 37 CFR 1.102(c)(1), filed April 25, 2011, to make the above-identified application special based on applicant's age as set forth in M.P.E.P. § 708.02, Section IV.

The petition is **GRANTED**.

A grantable petition to make an application special under 37 CFR 1.102(c)(1) and MPEP § 708.02, Section IV: Applicant's Age must be accompanied by evidence showing that at least one of the applicants is 65 years of age, or more, such as a birth certificate or a statement by applicant. No fee is required

The instant petition includes a statement signed by applicant. Accordingly, the above-identified application has been accorded "special" status.

Telephone inquiries concerning this decision should be directed to undersigned at 571-272-1642.

All other inquiries concerning either the examination or status of the application should be directed to the Technology Center.

The application is being forwarded to back to the Office of Patent Application Processing for pre-examination processing. This application will be accorded "special" status once pre-examination processing is complete.

/AMW/
April M. Wise
Petitions Examiner
Office of Petitions

UNITED STATES PATENT AND TRADEMARK OFFICE

Commissioner for Patents
United States Patent and Trademark Office
P.O. Box 1450
Alexandria, VA 22313-1450
www.uspto.gov

MAILED

AUG 01 2011

PCT LEGAL ADMINISTRATION

Oppedahl Patent Law Firm LLC
P O Box 5940
Dillon CO 80435-5940

In re Application of
HOLUSA, Václav
Application No.: 13/024,342
ATTY Docket No.: JANK.P-002-CIP
For: METHOD OF CONVERSION OF BIODEGRADABLE, HYGIENICALLY NON-STABILIZED SUBSTRATE INTO HYGIENICALLY STABILIZED PRODUCT

DECISION

This decision is in response to the RENEWED REQUEST FOR CORRECTED FILING RECEIPT filed in the United States Patent and Trademark Office (USPTO) on 07 March 2011 which is being treated as a petition under 37 CFR 1.181.

BACKGROUND

On 16 November 2005, applicant filed international application, PCT/CZ2005/000087.

On 10 February 2011, applicant filed the present application, which claims domestic benefit under 35 U.S.C. 120 to U.S. Application No. 12/090,479, which is the national stage application under 35 U.S.C 371 of PCT/CZ2005/000087.

On 24 February 2011, the USPTO issued a Filing Receipt for the present application.

On 28 February 2011, applicant filed a "Request for Corrected Filing Receipt" to correct the "filing date" of U.S. national stage application 12/090,479.

On 07 March 2011, a "Response to Request Corrected Filing Receipt" was mailed to applicant refusing the requested correction. On that same day, the petition under 37 CFR 1.181 considered herein was filed.

DISCUSSION

Applicant requests correction of the official filing receipt to change the "filing date" of U.S. national stage application 12/090,479 from 16 April 2008 to 16 November 2005. Applicant's request is refused. The date (16 April 2008) associated with U.S

national stage application no. 12/090,479 on the filing receipt is not the actual filing date of the national stage application, but rather the date of receipt of the requirements under 37 U.S.C. 371(c)(1), (2) and (4). See MPEP §1893.03(b), which states in pertinent part:

> [w]hen the file wrapper label or PALM bib-data sheet and filing receipt are printed, the information is read from the PALM database and the information printed in the filing date box is the date of receipt of 35 U.S.C. 371(c)(1), (c)(2) and (c)(4) requirements rather than the actual international filing date.

CONCLUSION

For the reasons above, the petition under 37 CFR 1.181 is **DISMISSED**, without prejudice

Any further correspondence with request to this matter may be filed electronically via EFS-Web selecting the document description "Petition for review and processing by the PCT Legal Office" or by mail addressed to Mail Stop PCT, Commissioner for Patents, Office of PCT Legal Administration, P.O. Box 1450, Alexandria, Virginia 22313-1450, with the contents of the letter marked to the attention of the Office of PCT Legal Administration.

/Boris Milef/

Shane Thomas
PCT Legal Detailee
Office of PCT Legal Administration

Boris Milef
PCT Legal Examiner
Office of PCT Legal Administration
(571) 272-3288

UNITED STATES PATENT AND TRADEMARK OFFICE

UNITED STATES DEPARTMENT OF COMMERCE
United States Patent and Trademark Office
Address: COMMISSIONER FOR PATENTS
P.O. Box 1450
Alexandria, Virginia 22313-1450
www.uspto.gov

APPLICATION NO.	FILING DATE	FIRST NAMED INVENTOR	ATTORNEY DOCKET NO.	CONFIRMATION NO.
13/024,360	02/10/2011	Sho KATO	0756-9157	1556

31780 7590 04/12/2012
Robinson Intellectual Property Law Office, P.C.
3975 Fair Ridge Drive
Suite 20 North
Fairfax, VA 22033

EXAMINER
LEE, HSIEN MING

ART UNIT	PAPER NUMBER
2823	

MAIL DATE	DELIVERY MODE
04/12/2012	PAPER

Please find below and/or attached an Office communication concerning this application or proceeding.

The time period for reply, if any, is set in the attached communication.

UNITED STATES PATENT AND TRADEMARK OFFICE

Commissioner for Patents
United States Patent and Trademark Office
P.O. Box 1450
Alexandria, VA 22313-1450
www.uspto.gov

April 11, 2012

Robinson Intellectual Property Law Office, P.C.
3975 Fair Ridge Drive
Suite 20 North
Fairfax VA 22033

Re Application of
KATO, SHO, ET Al
Application: **13/024360**
Filed: **02/10/2011**
Attorney Docket No: **0756-9157**

: DECISION ON PETITION
: ACCEPTANCE OF COLOR
: DRAWINGS

This is a decision on the Petition to Accept Color Drawings under 37 C.F.R 1.84 (a) (2), received in the United States Patent and Trademark Office (USPTO) February11, 2011.
The petition is **GRANTED**.
A grantable petition under 37 C.F.R. 1.84(a) (2) must be accompanied by the following.

1. The fee set forth under 37 C.F.R. 1.17(h),
2. Three (3) sets of the color drawings in question, or (1) set if filed via EFS, and
3. The specification containing the following language as the first paragraph in that portion of the specification relating to the brief description of the drawings.

   "The file of this patent contains at least one drawing executed in color. Copies of this patent with color drawing(s) will be provided by the Patent and Trademark Office upon request and payment of the necessary fee."

The petition was accompanied by all of the required fees and drawings. The specification contains the appropriate language. Therefore, the petition is GRANTED.

Telephone inquires relating to this decision may be directed to the undersigned in the Office of Data Management at 571-272-4200.

/Bernadette Queen/
Quality Control Specialist
Office of Data Management
Publications Branch

UNITED STATES PATENT AND TRADEMARK OFFICE

Commissioner for Patents
United States Patent and Trademark Office
P.O. Box 1450
Alexandria, VA 22313-1450
www.uspto.gov

APPLE INC.
C/O NOVAK DRUCE + QUIGG LLP
1000 LOUISIANA STREET
FIFTH-THIRD FLOOR
HOUSTON TX 77002

MAILED
NOV 01 2011
OFFICE OF PETITIONS

In re Application of	:	
MACDONALD	:	
Application No. 13/024,562	:	NOTICE
Filed: February 10, 2011	:	
Attorney Docket No. 20182.09.NPUS00	:	
P11590US1		

This is a notice regarding your request for acceptance of a fee deficiency submission under 37 CFR 1.28. On September 1, 1998, the Court of Appeals for the Federal Circuit held that 37 CFR 1.28(c) is the sole provision governing the time for correction of the erroneous payment of the issue fee as a small entity. **See DH Technology v. Synergystex International, Inc. 154 F.3d 1333, 47 USPQ2d 1865 (Fed. Cir. Sept. 1, 1998).**

The Office no longer investigates or rejects original or reissue applications under 37 CFR 1.56. **1098 Off. Gaz. Pat. Office 502 (January 3, 1989)**. Therefore, nothing in this Notice is intended to imply that an investigation was done.

Your fee deficiency submission under 37 CFR 1.28 is hereby **ACCEPTED**.

This application is no longer entitled to small entity status. Accordingly, all future fees paid in this application must be paid at the large entity rate.

Inquiries related to this communication should be directed to Diane Goodwyn at (571) 272-6735.

Thurman K. Page
Petitions Examiner
Office of Petitions

cc: BRIAN K. MCKNIGHT
NOVAK DRUCE + QUIGG LLP
555 MISSION STREET, 34TH FLOOR
SAN FRANCISCO, CA 94105

IN THE UNITED STATES PATENT AND TRADEMARK OFFICE

First Named Inventor: Rohit CHOUHAN	)
Confirmation No.: 1053	)
	)
Serial No.: 13/024,623	)
	)
Filing Date: February 10, 2011	)
	)
Atty Docket No.: 244347-1/GEC-269	)

Commissioner for Patents
P.O. Box 1450
Alexandria, VA 22313-1450

Statement Concerning the Basis for the Special Status

SIR:

Applicant respectfully submits that Special Status is sought on the basis that the present invention materially contributes to the development of renewable energy resources or energy conservation.

The undersigned attorney may be contacted at the number below to facilitate the resolution of any matters. Please charge any fees that are incurred in connection with this Statement to deposit account no. 09-0470.

Respectfully submitted,

General Electric Company

By : /Douglas D. Zhang/
Douglas D. Zhang
Reg. No. 37,985

Dated: May 13, 2011

GE Global Patent Operation
2 Corporate Drive, Suite 648
Shelton, CT 06484
203-944-6755

Doc Code: PET.GREEN
Document Description: Petition for Green Tech Pilot

PTO/SB/420 (03-11)

PETITION TO MAKE SPECIAL UNDER THE GREEN TECHNOLOGY PILOT PROGRAM

Attorney Docket Number: 244347-1/GEC-269	Application Number (if known): 13/024,623	Filing date: February 10, 2011

First Named Inventor: Rohit Chouhan

Title: ROTOR BLADE FOR WIND TURBINE

APPLICANT HEREBY REQUESTS TO PARTICIPATE IN THE GREEN TECHNOLOGY PILOT PROGRAM FOR THE ABOVE-IDENTIFIED APPLICATION. See Instruction Sheet on page 2.

This petition must be timely filed electronically using the USPTO electronic filing system, EFS-Web.

1. By filing this petition:

   Applicant is requesting early publication: Applicant hereby requests early publication under 37 CFR 1.219 and the publication fee set forth in 37 CFR 1.18(d) accompanies this request.

2. By filing this petition: applicant is agreeing to make an election without traverse in a telephonic interview and elect an invention that meets the eligibility requirements for the Green Technology Pilot Program, if the Office determines that the claims are not obviously directed to a single invention. See Instruction Sheet.

3. This request is accompanied by statements of special status for the eligibility requirement.

4. The application contains no more than three (3) independent claims and twenty (20) total claims.

5. The application does not contain any multiple dependent claims.

6. Other attachments: Statement Concerning the Basis for the Special Status

Signature /Douglas D. Zhang/	Date May 13, 2011
Name (Print/Typed) Douglas D. Zhang	Registration Number 37,985

***Note**: Signatures of all the inventors or assignees of record of the entire interest or their representative(s) are required in accordance with 37 CFR 1.33 and 11.18. Please see 37 CFR 1.4(d) for the form of the signature. If necessary, submit multiple forms for more than one signature, see below*.*

☐ *Total of _____ forms are submitted.

If you need assistance in completing the form, call 1-800-PTO-9199 and select option 2.

Privacy Act Statement

The **Privacy Act of 1974 (P.L. 93-579)** requires that you be given certain information in connection with your submission of the attached form related to a patent application or patent. Accordingly, pursuant to the requirements of the Act, please be advised that: (1) the general authority for the collection of this information is 35 U.S.C. 2(b)(2); (2) furnishing of the information solicited is voluntary; and (3) the principal purpose for which the information is used by the U.S. Patent and Trademark Office is to process and/or examine your submission related to a patent application or patent. If you do not furnish the requested information, the U.S. Patent and Trademark Office may not be able to process and/or examine your submission, which may result in termination of proceedings or abandonment of the application or expiration of the patent.

The information provided by you in this form will be subject to the following routine uses:

1. The information on this form will be treated confidentially to the extent allowed under the Freedom of Information Act (5 U.S.C. 552) and the Privacy Act (5 U.S.C 552a). Records from this system of records may be disclosed to the Department of Justice to determine whether disclosure of these records is required by the Freedom of Information Act.
2. A record from this system of records may be disclosed, as a routine use, in the course of presenting evidence to a court, magistrate, or administrative tribunal, including disclosures to opposing counsel in the course of settlement negotiations.
3. A record in this system of records may be disclosed, as a routine use, to a Member of Congress submitting a request involving an individual, to whom the record pertains, when the individual has requested assistance from the Member with respect to the subject matter of the record.
4. A record in this system of records may be disclosed, as a routine use, to a contractor of the Agency having need for the information in order to perform a contract. Recipients of information shall be required to comply with the requirements of the Privacy Act of 1974, as amended, pursuant to 5 U.S.C. 552a(m).
5. A record related to an International Application filed under the Patent Cooperation Treaty in this system of records may be disclosed, as a routine use, to the International Bureau of the World Intellectual Property Organization, pursuant to the Patent Cooperation Treaty.
6. A record in this system of records may be disclosed, as a routine use, to another federal agency for purposes of National Security review (35 U.S.C. 181) and for review pursuant to the Atomic Energy Act (42 U.S.C. 218(c)).
7. A record from this system of records may be disclosed, as a routine use, to the Administrator, General Services, or his/her designee, during an inspection of records conducted by GSA as part of that agency's responsibility to recommend improvements in records management practices and programs, under authority of 44 U.S.C. 2904 and 2906. Such disclosure shall be made in accordance with the GSA regulations governing inspection of records for this purpose, and any other relevant (*i.e.*, GSA or Commerce) directive. Such disclosure shall not be used to make determinations about individuals.
8. A record from this system of records may be disclosed, as a routine use, to the public after either publication of the application pursuant to 35 U.S.C. 122(b) or issuance of a patent pursuant to 35 U.S.C. 151. Further, a record may be disclosed, subject to the limitations of 37 CFR 1.14, as a routine use, to the public if the record was filed in an application which became abandoned or in which the proceedings were terminated and which application is referenced by either a published application, an application open to public inspection or an issued patent.
9. A record from this system of records may be disclosed, as a routine use, to a Federal, State, or local law enforcement agency, if the USPTO becomes aware of a violation or potential violation of law or regulation.

UNITED STATES PATENT AND TRADEMARK OFFICE

UNITED STATES DEPARTMENT OF COMMERCE
United States Patent and Trademark Office
Address: COMMISSIONER FOR PATENTS
P.O. Box 1450
Alexandria, Virginia 22313-1450
www.uspto.gov

APPLICATION NO.	FILING DATE	FIRST NAMED INVENTOR	ATTORNEY DOCKET NO.	CONFIRMATION NO.
13/024,623	02/10/2011	Rohit Chouhan	244347/GEC-269	1053

87853 7590 06/20/2011
Dority & Manning, PA and General Electric Company
Post Office Box 1449
Greenville, SC 29602

EXAMINER

ART UNIT	PAPER NUMBER
3745	

MAIL DATE	DELIVERY MODE
06/20/2011	PAPER

Please find below and/or attached an Office communication concerning this application or proceeding.

The time period for reply, if any, is set in the attached communication.

UNITED STATES PATENT AND TRADEMARK OFFICE

Commissioner for Patents
United States Patent and Trademark Office
P.O. Box 1450
Alexandria, VA 22313-1450
www.uspto.gov

Dority & Manning, PA and General Electric Company
Post Office Box 1449
Greenville SC 29602

In re Application of	:	
CHOUHAN, ROHIT	:	DECISION ON PETITION
Application No. 13/024623	:	TO MAKE SPECIAL UNDER
Filed: February 10, 2011	:	THE GREEN TECHNOLOGY
Attorney Docket No. 244347/GEC-269	:	PILOT PROGRAM

This is a decision on the petition under 37 CFR 1.102, filed May 19, 2011, to make the above-identified application special under the pilot program for applications pertaining to Green Technologies as set forth in 74 Federal Register Notice 64666 (December 8, 2009) and amended by 75 Federal Register Notice 28554 (May 21, 2010) and 75 Federal Register Notice 69049 (November 10, 2010).

The petition is **dismissed**.

A grantable petition to make an application special under 37 CFR 1.102 and the pilot program as set forth in 74 FR 64666 must be directed to a nonprovisional application filed under 35 USC 111(a) or be a national stage entry under 35 USC 371, exclusive of any reissue applications.

If reconsideration of this decision is desired, a petition for reconsideration must be filed within ONE (1) MONTH OR THIRTY (30) DAYS from the mail date of this decision, whichever is longer. No extension of this time limit can be granted under 37 CFR 1.136(a) or (b). The petition for reconsideration should include an exhaustive attempt to provide the lacking item(s) noted below, since, after a decision on the petition for reconsideration, no further reconsideration or review of the matter will be undertaken by the Director.

In order to qualify for special status, the following requirements must be met. 1) The application must have no more than 3 independent claims and no more than 20 total claims. 2) The application must not contain any multiple dependent claims. 3) The petition must state the basis for seeking special status, i.e., the claimed invention either: A) materially enhances the quality of the environment or B) materially contributes to: i) the discovery or development of renewable energy resources, ii) the more efficient utilization and conservation of energy resources, or iii) greenhouse gas emission reduction. 4) If the disclosure is not clear on its face that the claimed invention materially contributes under category (A) or (B), the petition must be accompanied by a statement by the applicant, assignee, or an attorney/agent registered to practice before the

Office explaining how the materiality standard is met. 5) A statement that applicant will agree to make an election without traverse in a telephonic interview if a restriction requirement is made by the examiner. 6) The petition to make special must be filed electronically. 7) The petition must be filed at least one day prior to the date that a first Office Action appears in the Patent Application Information Retrieval (PAIR) system. 8) The petition must be accompanied by a request for early publication in compliance with 37 CFR 1.219 and include the publication fee as set forth in 37 CFR 1.18(d).

The requirement for a fee for consideration of the petition to make special for applications pertaining to Green Technologies has been waived.

The petition lacks item #4.

In regard to item 4, petitioner should note that the instant petition includes a statement identifying the basis for the special status (i.e., whether the instant invention (1) materially enhances the quality of the environment or materially contributes to (2) development of renewable energy resources or energy conservation, or (3) greenhouse gas reduction) as required by sections II and III of the notice. Petitioner indicates that the basis for Special Status is that the claimed invention contributes to the development of renewable energy source and energy conservation. However, as stated in the notice, applicant must also provide a statement pertaining to the materiality standard if the application disclosure is not clear on its face as to the materiality of the basis for the special status of the invention. This petition lacks such a statement and it is not agreed that the application on its face meets that materiality standard. It is not clear how the claimed rotor blade per se will provide and enhance the quality of the environment or contribute to the development of renewable energy resources or to energy conservation or to greenhouse gas reduction. The claims have nothing to do with the green technologies.

Any reconsideration of this decision should be submitted through the USPTO electronic filing system, EFS-Web, and selecting the document description of "Petition for Green Tech Pilot" on the EFS-Web screen.

Telephone inquiries concerning this decision should be directed to Henry C. Yuen at 571-272-4856.

This application is currently docketed and ready for examination. The application will be forwarded to the Technology Center Art Unit 3745 for action in its regular turn.

/Henry C. Yuen/

Henry C. Yuen
Quality Assurance Specialist
Technology Center TC 3700

IN THE UNITED STATES PATENT AND TRADEMARK OFFICE

First Named Inventor: Rohit Chouhan	)
	)
Confirmation No.: 1053	)
	)
Serial No.: 13/024,623	)
	)
Filing Date: 02-10-2011	)
	)
Atty Docket No.: 244347/GEC-269	)

Commissioner for Patents
P.O. Box 1450
Alexandria, VA 22313-1450

Request for Reconsideration

SIR:

This is responsive to the Decision on Petition, dated as mailed 20 June 2011, in the above-referenced application.

Applicant respectfully requests reconsideration of Application's Petition to Make Special on the basis that the present invention materially contributes to the development of renewable energy resources or energy conservation.

The Decision to Make Special under the Green Technology Pilot Program (hereinafter "the Decision") alleges that it is not clear how the claimed rotor blade per se will provide and enhance the quality of the environment or contribute to the development of renewable energy resources or to energy conservation or to greenhouse gas reduction. The Decision further alleges that the claims have nothing to do with green technologies. Applicant does not agree with the comments made in the Decision.

Applicant respectfully submits that the present disclosure is generally directed to wind turbine rotor blades, and more particularly to noise reduction features defined in the rotor blades. (see at least paragraph [0001]).

Wind power is considered one of the cleanest, most environmentally friendly energy sources presently available, and wind turbines have gained increased attention in this regard. A modern wind turbine typically includes a tower, generator, gearbox, nacelle, and one or more rotor blades. The rotor blades capture kinetic energy of wind using known foil principles. The rotor blades transmit the kinetic energy in the form of rotational energy so as to turn a shaft coupling the rotor blades to a gearbox, or if a gearbox is not used, directly to the generator. The generator then converts the mechanical energy to electrical energy that may be deployed to a utility grid. During operation of the wind turbine, the rotor blades may produce noise of varying frequencies due to the flow of air past the rotor blades. One specific form of noise that may be produced by the rotor blades is a generally high frequency broadband noise caused by flow vortices at the tip of the rotor blade. The flow vortices are generally caused by the interaction of flow over the tip from the pressure side and the suction side. The flow vortices may then interact with the tip and the trailing edge of the rotor blade, causing the generally high frequency broadband noise. As wind turbines are increasingly located near populated areas, this noise can be disruptive to the populace and thus is generally undesirable. Additionally, the flow vortices may disturb streamline flows off of the pressure side and the suction side near the tip, thus reducing the performance of the rotor blade. (see at least paragraphs [0002]-[0005]).

Embodiments disclosed herein are directed to improved apparatus and methods for reducing the noise associated with a rotor blade, and specifically noise caused by the tip flow vortices of a rotor blade. Thus, in one embodiment, the apparatus may include a rotor blade for a wind turbine. The rotor blade includes a body having exterior surfaces defining a pressure side, a suction side, a leading edge, and a trailing edge extending between a tip and a root, the surfaces further defining an interior. The rotor blade further includes at least one purge conduit defined in the tip and configured for exhausting air from the interior such that the air generally reduces noise at the tip. (see at least the Abstract of the Disclosure).

Embodiments of the present invention ensure that wind turbines can be installed and operated closer to residential areas. It is well known in the art that the noise generated by wind turbine rotor blades is one of the significant obstacles to the proliferation wind turbines, and development of wind energy. Residents of communities near wind farms have complained of the effect of rotor blade noise on their quality of life. Noise from wind turbines have also been blamed for reduction of property values in nearby communities. Complaints from residents in affected communities may have resulted in tighter regulation of the placement and operation of wind turbines. Such measures may make the adoption of wind technology excessively burdensome for energy companies and communities alike.

Embodiments of the present invention may reduce the noise associated with wind turbines, and thus permit installation of wind turbines in areas where they would otherwise affect nearby communities. This removes an obstacle to the construction of wind turbines and facilitates the construction of wind turbines in locations with favorable

wind conditions Embodiments of the present invention also improve the efficiency of wind turbines by reducing noise associated with the tip of the rotor blade. More efficient wind turbines result in greater renewable energy output, which in turn promotes increased renewable energy production

The undersigned attorney may be contacted at the number below to facilitate the resolution of any matters. Please charge any fees that are incurred in connection with this Statement to deposit account no. 09-0470.

Respectfully submitted,

General Electric Company

By : /Allison W Mages/
Allison Weiner Mages
Reg. No. 57,275

Dated: July 20, 2011

GE Global Patent Operation
2 Corporate Drive, Suite 648
Shelton, CT 06484
203-944-6730

UNITED STATES PATENT AND TRADEMARK OFFICE

UNITED STATES DEPARTMENT OF COMMERCE
United States Patent and Trademark Office
Address: COMMISSIONER FOR PATENTS
P.O. Box 1450
Alexandria, Virginia 22313-1450
www.uspto.gov

APPLICATION NO.	FILING DATE	FIRST NAMED INVENTOR	ATTORNEY DOCKET NO.	CONFIRMATION NO.
13/024,623	02/10/2011	Rohit Chouhan	244347/GEC-269	1053

87853 7590 08/04/2011
Dority & Manning, PA and General Electric Company
Post Office Box 1449
Greenville, SC 29602

EXAMINER

ART UNIT	PAPER NUMBER
3745	

MAIL DATE	DELIVERY MODE
08/04/2011	PAPER

Please find below and/or attached an Office communication concerning this application or proceeding.

The time period for reply, if any, is set in the attached communication.

UNITED STATES PATENT AND TRADEMARK OFFICE

Commissioner for Patents
United States Patent and Trademark Office
P.O. Box 1450
Alexandria, VA 22313-1450
www.uspto.gov

8/4/11

Dority & Manning, PA and General Electric Company
Post Office Box 1449
Greenville SC 29602

In re Application of	:	
Chouhan et al.	:	DECISION ON PETITION
Application No. 13/024,623	:	TO MAKE SPECIAL UNDER
Filed: 2/10/2011	:	THE GREEN TECHNOLOGY
Attorney Docket No. **244347/GEC-269**	:	PILOT PROGRAM

This is a decision on the request for reconsideration, filed 7/20/2011, to make the above-identified application special under the pilot program for applications pertaining to Green Technologies as set forth in 74 Federal Register Notice 64666 (December 8, 2009) and amended by 75 Federal Register Notice 28554 (May 21, 2010) and 75 Federal Register Notice 69049 (November 10, 2010).

The petition is **GRANTED**.

A grantable petition to make an application special under 37 CFR 1.102 and the pilot program as set forth in 74 FR 64666 must be directed to a nonprovisional application filed under 35 USC 111(a) or be a national stage entry under 35 USC 371, exclusive of any reissue applications.

In order to qualify for special status, the following requirements must be met. 1) The application must have no more than 3 independent claims and no more than 20 total claims. 2) The application must not contain any multiple dependent claims. 3) The petition must state the basis for seeking special status, i.e., the claimed invention either: A) materially enhances the quality of the environment or B) materially contributes to: i) the discovery or development of renewable energy resources, ii) the more efficient utilization and conservation of energy resources, or iii) greenhouse gas emission reduction. 4) If the disclosure is not clear on its face that the claimed invention materially contributes under category (A) or (B), the petition must be accompanied by a statement by the applicant, assignee, or an attorney/agent registered to practice before the Office explaining how the materiality standard is met. 5) A statement that applicant will agree to make an election without traverse in a telephonic interview if a restriction requirement is made by the examiner. 6) The petition to make special must be filed electronically. 7) The petition must be filed at least one day prior to the date that a first Office Action appears in the Patent Application Information Retrieval (PAIR) system. 8) The petition must be accompanied by a request for early publication in compliance with 37 CFR 1.219 and include the publication fee as set forth in 37 CFR 1.18(d).

The requirement for a fee for consideration of the petition to make special for applications pertaining to Green Technologies has been waived.

The instant petition complies with items 1 – 8 above. Accordingly, the above-identified application has been accorded "special" status.

Telephone inquires concerning this decision should be directed to Tom Dunn at 571-272-1171.

The application is being forwarded to the Technology Center Art Unit 3745 for action on the merits commensurate with this decision.

/Tom Dunn/

Tom Dunn
Quality Assurance Specialist
Technology Center 1700

UNITED STATES PATENT AND TRADEMARK OFFICE

Commissioner for Patents
United States Patent and Trademark Office
P.O. Box 1450
Alexandria, VA 22313-1450
www.uspto.gov

PATTERSON THUENTE CHRISTENSEN
PEDERSEN PA
4800 IDS CENTER
80 SOUTH 8TH STREET
MINNEAPOLIS MN 55402-2100

MAILED
FEB 21 2012
OFFICE OF PETITIONS

In re Application of	:	DECISION
Buchheister, et al.	:	ON PETITION
Application No. 13/024,668	:	
Filed: February 10, 2011	:	
Attorney Docket Number: 3795.52US01	:	

This is in response to the petition under 37 CFR 1.84(a)(2), filed February 10, 2011, for acceptance of color drawings.

The petition is **DISMISSED**.

Any request for reconsideration of this decision must be submitted within **TWO (2) MONTHS** from the mail date of this decision. Extensions of time under 37 CFR 1.136(a) are permitted. The reconsideration request should include a cover letter entitled, "Renewed Petition under 37 CFR 1.84(a)(2)". No further petition fee is required for a renewed petition.

A grantable petition under 37 C.F.R. 1.84(a)(2) must be accompanied by the following:

(1) The fee set forth in 37 C.F.R. 1.17(h);

(2) Three (3) sets of color drawings, or one (1) set if filed via EFS, and

(3) The specification contains appropriate language referring to the color drawings as the first paragraph in that portion of the specification relating to the brief description of the drawings.

In addition, MPEP 608.02 states that a petition to accept color drawings will only be granted when the Office "has determined that a color drawing or photograph is the only practical medium by which to disclose in a printed utility patent the subject matter to be patented."

Here, the Office has determined that color drawings are not the only practical medium by which to disclose the subject matter. See, e.g. MPEP 608.02, Section IX, which states that drawing symbols can be used to indicate various materials where the material is an important feature of the invention.

Further correspondence with respect to this matter should be addressed as follows:

By mail: Mail Stop Petitions
Commissioner for Patents
PO Box 1450
Alexandria VA 22313-1450

By FAX: 571-273-8300
Attn: Office of Petitions

The application is being forwarded to Group Art Unit 2873 for examination in due course.

Telephone inquiries regarding this decision should be directed to the undersigned at (571)272-3207.

Cliff Congo
Petitions Attorney
Office of Petitions

UNITED STATES PATENT AND TRADEMARK OFFICE

Commissioner for Patents
United States Patent and Trademark Office
P.O. Box 1450
Alexandria, VA 22313-1450
www.uspto.gov

PATTERSON THUENTE CHRISTENSEN
PEDERSEN PA
4800 IDS CENTER
80 SOUTH 8TH STREET
MINNEAPOLIS MN 55402-2100

MAILED

MAR 16 2012

OFFICE OF PETITIONS

In re Application of	:	CORRECTED
Buchheister, et al.	:	DECISION
Application No. 13/024,668	:	ON PETITION
Filed: February 10, 2011	:	
Attorney Docket Number: 3795.52US01	:	

This is in response to the petition under 37 CFR 1.84(a)(2), filed February 10, 2011, for acceptance of color drawings. A previous decision was dismissing the petition was mailed on February 21, 2012.

The petition is **GRANTED**.

A grantable petition under 37 C.F.R. 1.84(a)(2) must be accompanied by the following:

(1) The fee set forth in 37 C.F.R. 1.17(h);

(2) Three (3) sets of color drawings, or one (1) set if filed via EFS, and

(3) The specification contains appropriate language referring to the color drawings as the first paragraph in that portion of the specification relating to the brief description of the drawings.

Here, the petition was accompanied by the required fee and drawings. The specification contains the appropriate language. Therefore, the petition is granted.

The application is being forwarded to Group Art Unit 2873 for examination in due course.

Telephone inquiries regarding this decision should be directed to the undersigned at (571)272-3207.

/Cliff Congo/
Cliff Congo
Petitions Attorney
Office of Petitions

UNITED STATES PATENT AND TRADEMARK OFFICE

Commissioner for Patents
United States Patent and Trademark Office
P.O. Box 1450
Alexandria, VA 22313-1450
www.uspto.gov

MCDERMOTT, WILL & EMERY LLP
600 13th Street, NW
Washington DC 20005-3096

MAILED
SEP 02 2011
OFFICE OF PETITIONS

In re Application of	:
Feng, et al.	:
Application No. 13/024,700	: DECISION REFUSING STATUS
Filed: February 10, 2011	: UNDER 37 CFR 1.47(a)
Attorney Docket No. **056612-0043**	:

For: **SYSTEM AND METHOD FOR VIDEO COMMUNICATION ON MOBILE DEVICES**

This is a decision on the petition under 37 CFR 1.47(a), August 24, 2011.

The petition under 37 CFR 1.47(a) is **dismissed.**

Any request for reconsideration under this decision must be submitted within TWO (2) MONTHS from the mail date of this decision. Extensions of time under 37 CFR 1.136(a) are permitted. Failure to respond will result in the abandonment of this application. Any response should be titled "Request for Reconsideration of Petition Under 37 CFR 1.47(a).

A grantable petition under 37 CFR 1.47(a) requires:

(1) proof that the non-signing inventor(s) cannot be reached or refuses to sign the oath or declaration after having been presented with the application papers (specification, claims, and drawings);

(2) an acceptable oath or declaration in compliance with 35 U.S.C. §§ 115 and 116;

(3) the petition fee,

(4) a statement of the last known address of the non-signing inventor,

The instant petition lacks items (1) and (2) as set forth above.

In summary, petitioner states that the non-signing inventor has refused to join the prosecution of the application. Although petitioner has obtained a constructive refusal to sign the declaration for the non-signing inventor, petitioner has not stated that a complete copy of the application papers was presented to the non-signing inventor. It is noted that the petition states that a complete copy of the application papers was sent to the non-signing inventor, but the e-mails exchanged between inventor Feng and the non-signing inventor do not seem to indicate that the complete copy of the application papers was sent to the last known address of the non-signing inventor. Section 409.03(d) of the *Manual of Patent Examining Procedure* provides, in pertinent part, that:

> [a] refusal by an inventor to sign an oath or declaration when the inventor has not been presented with the application papers does not, itself, suggest that the inventor is refusing to join the application unless it is clear that the inventor understands exactly what he or she is being asked to sign and refuses to accept the application papers. **A copy of the application papers should be sent to the last known address of the nonsigning inventor . . .**
>
> Proof that a *bona fide* attempt was made to present a copy of the application papers (specification, including claims, drawings, and oath or declaration) to the nonsigning inventor for signature, but the inventor refused to accept delivery of the papers or expressly stated that the application papers should not be sent, may be sufficient. When there is an express oral refusal, that fact along with the time and place of the refusal must be stated in the statement of facts. When there is an express written refusal, a copy of the document evidencing that refusal must be made part of the statement of facts. The document may be redacted to remove material not related to the inventor's reasons for refusal.
>
> When it is concluded by the 37 CFR 1.47 applicant that a nonsigning inventor's conduct constitutes a refusal, all facts upon which that conclusion is based should be stated in the statement of facts in support of the petition or directly in the petition. If there is documentary evidence to support facts alleged in the petition or in any statement of facts, such evidence should be submitted. Whenever a nonsigning inventor gives a reason for refusing to sign the application oath or declaration, that reason should be stated in the petition.

Petitioner should send a complete copy of the application papers to the last known address of the non-signing inventor and provide evidence of the same in accordance with MPEP 409.03(d) above.

As to item (2), Section 409.03 of the *Manual of Patent Examining Procedure* (MPEP) provides, in pertinent part, that:

> (A) All the available joint inventors must (1) make oath or declaration on their own behalf as required by 37 CFR 1.63 or 1.175 (see MPEP § 602 § 605.01, and § 1414) and (2) make oath or declaration on behalf of the nonsigning inventor as required by 37 CFR 1.64. An oath or declaration signed by all of the available joint inventors with the signature block of the nonsigning inventor(s) left blank may be treated as having been signed by all the available joint inventors on behalf of the nonsigning inventor(s), unless otherwise indicated.

The declaration filed on August 24, 2011, is defective because it does not contain a signature blocks for the non-signing inventor. The available joint inventors cannot be said to have executed the declaration on their own behalf and on behalf of inventor non-signing inventor. A proper declaration, preferably one that is formatted according to MPEP § 409.03 cited above, must accompany any renewed petition filed.

Further correspondence with respect to this matter should be addressed as follows:

By mail: Mail Stop Petitions
Commissioner for Patents
P.O. Box 1450
Alexandria, VA 22313-1450

By FAX: (571) 273-8300
Attn: Office of Petitions

Telephone inquiries concerning this decision should be directed to the undersigned at (571) 272-3222.

/Kenya A.. McLaughlin/
Kenya A. McLaughlin
Petitions Attorney
Office of Petitions

UNITED STATES PATENT AND TRADEMARK OFFICE

Commissioner for Patents
United States Patent and Trademark Office
P.O. Box 1450
Alexandria, VA 22313-1450
www.uspto.gov

MCDERMOTT, WILL & EMERY LLP
600 13th Street, NW
Washington DC 20005-3096

MAILED
NOV 22 2011
OFFICE OF PETITIONS

In re Application of :
Feng, et al. :
Application No. 13/024,700 : DECISION REFUSING STATUS
Filed: February 10, 2011 : UNDER 37 CFR 1.47(a)
Attorney Docket No. **056612-0043** :
For: **SYSTEM AND METHOD FOR VIDEO COMMUNICATION ON MOBILE DEVICES**

This is in response to the Request for Reconsideration under 37 CFR 1.47(a), noting the joinder of inventor Thakur in the above-cited application.

In view of the joinder of the inventor, further consideration under 37 CFR 1.47(a) is not necessary. This application does not have any Rule 1.47(a) status and no such status should appear on the file wrapper. This application need not be returned to this Office for further consideration under 37 CFR 1.47(a).

The Manual of Patent Examining Procedure ("MPEP"), § 409.03(j) provides that "[i]n the event the previously non-signing inventor decides to join the application by filing an executed oath or declaration complying with 37 CFR 1.63, the oath or declaration will be placed in the application file."

Accordingly, the declaration executed by the joint inventors is noted and made of record.

The address on the petition differs from the address of record. A courtesy copy of the decision is being sent to the address of record. All future correspondence will be mailed solely to the address of record until appropriate written instructions to the contrary are received.

This application is being directed to the Office of Patent Application Processing for further processing.

Telephone inquiries should be directed to the undersigned at (571) 272-3222.

/Kenya A. McLaughlin/

Kenya A. McLaughlin
Petitions Attorney
Office of Petitions

Cc : Arnol A. Parikh
McDermott Will & Emery, LLP
227 W. Monroe Street
Chicago, IL 60606

Doc Code: PET.GREEN
Document Description: Petition for Green Tech Pilot

PTO/SB/420 (11-10)
Approved for use through 01/31/2011. OMB 0651-0062
U.S. Patent and Trademark Office; U. S. DEPARTMENT OF COMMERCE
Under the Paperwork Reduction Act of 1995, no persons are required to respond to a collection of information unless it displays a valid OMB control number.

PETITION TO MAKE SPECIAL UNDER THE GREEN TECHNOLOGY PILOT PROGRAM

Attorney Docket Number:	Application Number (if known): 13024784	Filing date: 2/10/2011
First Named Inventor: Christian Smith		
Title: METHOD AND SYSTEM FOR THE ESTIMATING THE ENERGY CONSUMPTION OF COMMERCIALLY AVAILABLE ELECTRICAL DEVICES		

APPLICANT HEREBY REQUESTS TO PARTICIPATE IN THE GREEN TECHNOLOGY PILOT PROGRAM FOR THE ABOVE-IDENTIFIED APPLICATION. See Instruction Sheet on page 2.

This petition must be timely filed electronically using the USPTO electronic filing system, EFS-Web.

1. By filing this petition:

   Applicant is requesting early publication: Applicant hereby requests early publication under 37 CFR 1.219 and the publication fee set forth in 37 CFR 1.18(d) accompanies this request.

2. By filing this petition: applicant is agreeing to make an election without traverse in a telephonic interview and elect an invention that meets the eligibility requirements for the Green Technology Pilot Program, if the Office determines that the claims are not obviously directed to a single invention. See Instruction Sheet.

3. This request is accompanied by statements of special status for the eligibility requirement.

4. The application contains no more than three (3) independent claims and twenty (20) total claims.

5. The application does not contain any multiple dependent claims.

6. Other attachments: _____

Signature /Christian Smith/	Date 2/15/2011
Name (Print/Typed) Christian Smith	Registration Number 56996

Note: *Signatures of all the inventors or assignees of record of the entire interest or their representative(s) are required in accordance with 37 CFR 1.33 and 11.18. Please see 37 CFR 1.4(d) for the form of the signature. If necessary, submit multiple forms for more than one signature see below*.*

☐ *Total of 1 forms are submitted.

The information is required to obtain or retain a benefit by the public which is to file (and by the USPTO to process) an application. Confidentiality is governed by 35 U.S.C. 122 and 37 CFR 1.11 and 1.14. This collection is estimated to take 12 hours to complete, including gathering, preparing, and submitting the completed application form to the USPTO. Time will vary depending upon the individual case. Any comments on the amount of time you require to complete this form and/or suggestions for reducing this burden, should be sent to the Chief Information Officer, U.S. Patent and Trademark Office, U.S. Department of Commerce, P.O. Box 1450, Alexandria, VA 22313-1450. DO NOT SEND FEES OR COMPLETED FORMS TO THIS ADDRESS. **SEND TO: Commissioner for Patents, P.O. Box 1450, Alexandria, VA 22313-1450.**

If you need assistance in completing the form, call 1-800-PTO-9199 and select option 2.

Under the Paperwork Reduction Act of 1995, no persons are required to respond to a collection of information unless it displays a valid OMB control number.

Instruction Sheet for Petition to Make Special Under the Green Technology Pilot Program

(Not to be Submitted to the USPTO)

The following is a summary of the requirements (for more information see the notices (i) "Pilot Program for Green Technologies Including Greenhouse Gas Reduction," (ii) "Elimination of Classification Requirement in the Green Technology Pilot Program," and (iii) "Expansion and Extension of the Green Technology Pilot Program," available on the USPTO web site at http://www.uspto.gov/patents/init_events/green_tech.jsp):

1) The application must be a non-reissue, non-provisional utility application filed under 35 U.S.C. 111 (a), or an international application that has entered the national stage in compliance with 35 U.S.C. 371, irrespective of the filing date of the application. Reexamination proceedings are excluded from this pilot program.

2) The application must contain three or fewer independent claims and twenty or fewer total claims. The application must not contain any multiple dependent claims. For an application that contains more than three independent claims or twenty total claims, or multiple dependent claims, applicant must file a preliminary amendment in compliance with 37 CFR 1.121 to cancel the excess claims and/or the multiple dependent claims at the time the petition to make special is filed.

3) The claims must be directed to a single invention that materially enhances the quality of the environment, or that materially contributes to: (1) the discovery or development of renewable energy resources; (2) the more efficient utilization and conservation of energy resources; or (3) green house gas emission reduction (see the eligibility requirements of sections II and III of the notice (i) cited above). The petition must include a statement that, if the USPTO determines that the claims are directed to multiple inventions (e.g., in a restriction requirement), applicant will agree to make an election without traverse in a telephonic interview, and elect an invention that meets the eligibility requirements in section II or III of the notice (i) cited above.

4) The petition to make special must be timely filed electronically using the USPTO electronic filing system, EFS-Web, and selecting the document description of "Petition for Green Tech Pilot" on the EFS-Web screen. Applicant should use form PTO/SB/420, which is available as a Portable Document Format (PDF) fillable form in EFS-Web and on the USPTO Web site.

5) The petition to make special must be filed at least one day prior to the date that a first Office action (which may be an Office action containing only a restriction requirement) appears in the Patent Application Information Retrieval (PAIR) system. Applicant may check the status of the application using PAIR.

6) The petition to make special must be accompanied by a request for early publication in compliance with 37 CFR 1.219 and the publication fee set forth in 37 CFR 1.18(d).

Privacy Act Statement

The **Privacy Act of 1974 (P.L. 93-579)** requires that you be given certain information in connection with your submission of the attached form related to a patent application or patent. Accordingly, pursuant to the requirements of the Act, please be advised that: (1) the general authority for the collection of this information is 35 U.S.C. 2(b)(2); (2) furnishing of the information solicited is voluntary; and (3) the principal purpose for which the information is used by the U.S. Patent and Trademark Office is to process and/or examine your submission related to a patent application or patent. If you do not furnish the requested information, the U.S. Patent and Trademark Office may not be able to process and/or examine your submission, which may result in termination of proceedings or abandonment of the application or expiration of the patent.

The information provided by you in this form will be subject to the following routine uses:

1. The information on this form will be treated confidentially to the extent allowed under the Freedom of Information Act (5 U.S.C. 552) and the Privacy Act (5 U.S.C 552a). Records from this system of records may be disclosed to the Department of Justice to determine whether disclosure of these records is required by the Freedom of Information Act.
2. A record from this system of records may be disclosed, as a routine use, in the course of presenting evidence to a court, magistrate, or administrative tribunal, including disclosures to opposing counsel in the course of settlement negotiations.
3. A record in this system of records may be disclosed, as a routine use, to a Member of Congress submitting a request involving an individual, to whom the record pertains, when the individual has requested assistance from the Member with respect to the subject matter of the record.
4. A record in this system of records may be disclosed, as a routine use, to a contractor of the Agency having need for the information in order to perform a contract. Recipients of information shall be required to comply with the requirements of the Privacy Act of 1974, as amended, pursuant to 5 U.S.C. 552a(m).
5. A record related to an International Application filed under the Patent Cooperation Treaty in this system of records may be disclosed, as a routine use, to the International Bureau of the World Intellectual Property Organization, pursuant to the Patent Cooperation Treaty.
6. A record in this system of records may be disclosed, as a routine use, to another federal agency for purposes of National Security review (35 U.S.C. 181) and for review pursuant to the Atomic Energy Act (42 U.S.C. 218(c)).
7. A record from this system of records may be disclosed, as a routine use, to the Administrator, General Services, or his/her designee, during an inspection of records conducted by GSA as part of that agency's responsibility to recommend improvements in records management practices and programs, under authority of 44 U.S.C. 2904 and 2906. Such disclosure shall be made in accordance with the GSA regulations governing inspection of records for this purpose, and any other relevant (*i.e.*, GSA or Commerce) directive. Such disclosure shall not be used to make determinations about individuals.
8. A record from this system of records may be disclosed, as a routine use, to the public after either publication of the application pursuant to 35 U.S.C. 122(b) or issuance of a patent pursuant to 35 U.S.C. 151. Further, a record may be disclosed, subject to the limitations of 37 CFR 1.14, as a routine use, to the public if the record was filed in an application which became abandoned or in which the proceedings were terminated and which application is referenced by either a published application, an application open to public inspection or an issued patent.
9. A record from this system of records may be disclosed, as a routine use, to a Federal, State, or local law enforcement agency, if the USPTO becomes aware of a violation or potential violation of law or regulation.

UNITED STATES PATENT AND TRADEMARK OFFICE

UNITED STATES DEPARTMENT OF COMMERCE
United States Patent and Trademark Office
Address: COMMISSIONER FOR PATENTS
P.O. Box 1450
Alexandria, Virginia 22313-1450
www.uspto.gov

APPLICATION NO.	FILING DATE	FIRST NAMED INVENTOR	ATTORNEY DOCKET NO.	CONFIRMATION NO.
13/024,784	02/10/2011	Christian Smith	snapvolt	1356

91918 7590 04/15/2011
Christian Smith
2320 Ben Hur ct
San Jose, CA 95124

EXAMINER

ART UNIT	PAPER NUMBER
2123	

MAIL DATE	DELIVERY MODE
04/15/2011	PAPER

Please find below and/or attached an Office communication concerning this application or proceeding.

The time period for reply, if any, is set in the attached communication.

UNITED STATES PATENT AND TRADEMARK OFFICE

Commissioner for Patents
United States Patent and Trademark Office
P.O. Box 1450
Alexandria, VA 22313-1450
www.uspto.gov

Christian Smith
2320 Ben Hur Court
San Jose CA 95124

In re Application of	:	
SMITH, Christian	:	**DECISION ON PETITION**
Application No. 13/024,784	:	**TO MAKE SPECIAL UNDER**
Filed: February 10, 2011	:	**THE GREEN TECHNOLOGY**
For: **METHOD AND SYSTEM FOR THE ESTIMATING THE ENERGY CONSUMPTION OF COMMERCIALLY AVAILABLE ELECTRICAL DEVICES**	:	**PILOT PROGRAM**

The petition filed February 15, 2011 has been treated as a petition under 37 CFR 1.102 to make the above-identified application special under the pilot program for applications pertaining to Green Technologies as set forth in 74 Federal Register Notice 64666 (December 8, 2009) and amended by 75 Federal Register Notice 28554 (May 21, 2010).

The petition is **DISMISSED**.

If reconsideration of this decision is desired, a petition for reconsideration must be filed within ONE (1) MONTH OR THIRTY (30) DAYS from the mail date of this decision, whichever is longer. No extension of this time limit can be granted under 37 CFR 1.136(a) or (b). The petition for reconsideration should include an exhaustive attempt to provide the lacking item(s) noted below, since, after a decision on the petition for reconsideration, no further reconsideration or review of the matter will be undertaken by the Director.

A grantable petition to make an application special under 37 CFR 1.102 and the pilot program as set forth in 74 FR 64666 must be directed to a nonprovisional application filed under 35 USC 111(a) or be a national stage entry under 35 USC 371, exclusive of any reissue applications and be filed prior to the date of the notice, December 8, 2009.

In order to qualify for special status, the following requirements must be met. 1) The application must have no more than 3 independent claims and no more than 20 total claims. 2) The application must not contain any multiple dependent claims. 3) The petition must state the basis for seeking special status, i.e., the claimed invention either: A) materially enhances the quality of the environment or B) materially contributes to: i) the discovery or development of renewable energy resources, ii) the more efficient utilization and conservation of energy resources, or iii) greenhouse gas emission reduction. 4) If the disclosure is not clear on its face that the claimed

invention materially contributes under category (A) or (B); the petition must be accompanied by a statement by the applicant, assignee, or an attorney/agent registered to practice before the Office explaining how the materiality standard is met. 5) A statement that applicant will agree to make an election without traverse in a telephonic interview if a restriction requirement is made by the examiner. 6) The petition to make special must be filed electronically. 7) The petition must be filed at least one day prior to the date that a first Office Action appears in the Patent Application Information Retrieval (PAIR) system. 8) The petition must be accompanied by a request for early publication in compliance with 37 CFR 1.219 and include the publication fee as set forth in 37 CFR 1.18(d).

The requirement for a fee for consideration of the petition to make special for applications pertaining to Green Technologies has been waived.

The petition lacks item(s) 3 and 4 above for the reasons explained in more detail below.

Section II of the Pilot Program for Green Technologies as set forth in 74 Federal Register Notice 64666, specifies that "materiality standard does not permit an applicant to speculate as to how a hypothetical end-user might specially apply the invention in a manner that could materially enhance the quality of the environment. Nor dies such standard permit an applicant to enjoy the benefit of advanced examination merely because some minor aspect of the claimed invention may enhance the quality of the environment." This exclusion applies to applicant's petition since using "the devices [such as appliances] in a more energy efficient manner or replace them with more energy efficient models" based on information gleaned form the claimed "system for estimating the energy use of an electrical device" merely "speculate[s] as to how a hypothetical end-user might specially apply the invention in a manner that could materially enhance the quality of the environment." Additionally, the invention disclosed and claimed is directed to a system and method "to estimate total electrical usage over the circuit or group of circuits for a given time period. Beyond this, there seems to be no disclosure of "net reduction in electrical energy usage" resulting directly from the invention disclosed and claimed. Accordingly, the petition is properly dismissed.

Any reconsideration of this decision should be submitted through the USPTO electronic filing system, EFS-Web, and selecting the document description of "Petition for Green Tech Pilot" on the EFS-Web screen.

Any inquiry regarding this decision should be directed to Eddie C. Lee at (571) 272 - 1732.

/Eddie C. Lee/

Eddie C. Lee
Quality Assurance Specialist, TC 2100

REQUEST FOR RECONSIDERATION OF DISMISSAL OF PETITION TO MAKE SPECIAL UNDER THE GREEN TECHNOLOGY PILOT PROGRAM

Application No. 13/024,784
Filed: Feb 10, 2011
For: **METHOD AND SYSTEM FOR ESTIMATING THE ENERGY CONSUMPTION OF COMMERCIALLY AVAILABLE ELECTRICAL DEVICES**

Section II of the Pilot Program for Green Technologies as set forth in 74 Federal Register Notice 64666, specifies that "materiality standard does not permit an applicant to speculate as to how a hypothetical end-user might *specially* apply the invention in a manner that could materially enhance the quality of the environment".

The USPTO argues that the this exclusion applies to the current petition since "using the devices [such as appliances] in a more energy efficient manner or replace them with more energy efficient modes based on the information gleaned from the claimed invention merely speculates as to how a hypothetical end-user might *specially* apply the invention in a manner that could

materially enhance the quality of the environment".

The following definition of materiality is provided in 74 Federal Register Notice 64666:

For an application pertaining to environmental quality, the petition to make special must state that special status is sought because the invention materially enhances the quality of the environment by contributing to the restoration or maintenance of the basic life-sustaining natural elements.

Energy audits are a means of gathering information on power consumption in commercial or residential settings. Performing an energy audit is a common function in today's society. Audits are often performed free of charge by utility companies (such as Pacific Gas and Electric) in order to provide the utility customer with a tool to evaluate and reduce his power consumption. It is true that the results of an energy audit are not always acted upon. It is also true that there are no hard statistics as to precisely how much energy has been save due to energy audits. However it is unquestionable that the use of energy audits has resulted in electrical energy savings both in businesses and homes. Much of the electricity provided to utility customers is generated by the

combustion of fossil fuels such as coal. It can therefore be safely asserted that the energy auditing process has contributed to the maintenance of basic life-sustaining natural elements in the form of fossil fuels. Inventions that enhance the energy auditing process clearly meet the USPTO materiality standard.

Determination of the power usage of electrical devices found in businesses or homes is an essential component of the energy auditing process. Currently the following steps are taken to estimate power usage for a particular device:

1) locate manufacture provided labeling on the electrical device surface.

2) visually locate and mentally process the labeling contents to discover power parameters such as volts, watts

3) record the power parameters on paper or input the parameters to a computer

4) calculate power usage based on estimated usage over a specific time period

The present invention greatly simplifies the step 2 of this process. The person performing the audit takes a digital image of the labeling using a mobile device equipped with a camera such as an iphone. The digital image is then processed by the computer on the mobile device to extract the power parameters. This approach avoids both human error and frustration involved with mentally interpreting the label contents.

The present invention completely eliminates step 3 of the conventional process. Power parameters extracted from the digital image are stored directly in computer memory on the mobile device.

Step 4 is much more efficient using the present invention since power parameters can be immediately shown on the display of the mobile device. Further, power usage and cost can be directly calculated and displayed.

Applicant respectfully contends that there is no need to speculate as to how a hypothetical end user might *specially* apply the present invention. The invention is specifically (not specially) directed to the energy auditing process and provides a significant enhancement to an essential component of the process. Therefore

applicant submits the present invention meets the materiality and all other requirements specified by the USPTO as prerequisites for participation the Green Technology Pilot program as set forth in 74 Federal Register Notice 64666.

Thank you for your consideration.

/Christian Smith/
Inventor/applicant

REQUEST FOR RECONSIDERATION OF DISMISSAL OF PETITION TO MAKE SPECIAL UNDER THE GREEN TECHNOLOGY PILOT PROGRAM

Application No. 13/024,784
Filed: Feb 10, 2011
For: **METHOD AND SYSTEM FOR ESTIMATING THE ENERGY CONSUMPTION OF COMMERCIALLY AVAILABLE ELECTRICAL DEVICES**

Applicant would like to begin by pointing out that in the patent description the language "to estimate total electrical usage over the circuit or group of circuits over a given time" refers to one possible way data gathered by the invention may be utilized. The invention as claimed clearly and unequivocally pertains to estimating power usage for a single electrical device. Certainly data gathered from individual devices on a circuit can be aggregated to provide an estimate of power usage for the entire circuit.

Section II of the Pilot Program for Green Technologies as set forth in 74 Federal Register Notice 64666, specifies that "materiality standard does not permit an applicant to speculate as to how a hypothetical end-user might *specially* apply the invention in a

manner that could materially enhance the quality of the environment".

The USPTO argues that the this exclusion applies to the current petition since "using the devices [such as appliances] in a more energy efficient manner or replace them with more energy efficient modes based on the information gleaned from the claimed invention merely speculates as to how a hypothetical end-user might *specially* apply the invention in a manner that could materially enhance the quality of the environment".

The following definition of materiality is provided in 74 Federal Register Notice 64666:

For an application pertaining to environmental quality, the petition to make special must state that special status is sought because the invention materially enhances the quality of the environment by contributing to the restoration or maintenance of the basic life-sustaining natural elements.

Energy audits are a means of gathering information on power consumption in commercial or residential settings. Performing an energy audit is a common function in today's society. Audits are

often performed free of charge by utility companies (such as Pacific Gas and Electric) in order to provide the utility customer with a tool to evaluate and reduce his power consumption. It is true that the results of an energy audit are not always acted upon. It is also true that there are no hard statistics as to precisely how much energy has been save due to energy audits. However it is unquestionable that the use of energy audits has resulted in electrical energy savings both in businesses and homes. Much of the electricity provided to utility customers is generated by the combustion of fossil fuels such as coal. It can therefore be safely asserted that the energy auditing process has contributed to the maintenance of basic life-sustaining natural elements in the form of fossil fuels. Inventions that enhance the energy auditing process clearly meet the USPTO materiality standard.

Determination of the power usage of electrical devices found in businesses or homes is an essential component of the energy auditing process. Currently the following steps are taken to estimate power usage for a particular device:

1) locate manufacture provided labeling on the electrical device surface.

2) visually locate and mentally process the labeling contents to discover power parameters such as volts, watts

3) record the power parameters on paper or input the parameters to a computer

4) calculate power usage based on estimated usage over a specific time period

The present invention greatly simplifies the step 2 of this process. The person performing the audit takes a digital image of the labeling using a mobile device equipped with a camera such as an iphone. The digital image is then processed by the computer on the mobile device to extract the power parameters. This approach avoids both human error and frustration involved with mentally interpreting the label contents.

The present invention completely eliminates step 3 of the conventional process. Power parameters extracted from the digital image are stored directly in computer memory on the mobile device.

Step 4 is much more efficient using the present invention since

power parameters can be immediately shown on the display of the mobile device. Further, power usage and cost can be directly calculated and displayed.

Applicant respectfully contends that there is no need to speculate as to how a hypothetical end user might *specially* apply the present invention. The invention is specifically (not specially) directed to the energy auditing process and provides a significant enhancement to an essential component of the process. Therefore applicant submits the present invention meets the materiality and all other requirements specified by the USPTO as prerequisites for participation the Green Technology Pilot program as set forth in 74 Federal Register Notice 64666.

Thank you for your consideration.

/Christian Smith/
Inventor/applicant

UNITED STATES PATENT AND TRADEMARK OFFICE

UNITED STATES DEPARTMENT OF COMMERCE
United States Patent and Trademark Office
Address: COMMISSIONER FOR PATENTS
P.O. Box 1450
Alexandria, Virginia 22313-1450
www.uspto.gov

APPLICATION NO.	FILING DATE	FIRST NAMED INVENTOR	ATTORNEY DOCKET NO.	CONFIRMATION NO.
13/024,784	02/10/2011	Christian Smith	snapvolt.	1356

91918 7590 07/01/2011
Christian Smith
2320 Ben Hur ct
San Jose, CA 95124

EXAMINER

ART UNIT	PAPER NUMBER
2123	

MAIL DATE	DELIVERY MODE
07/01/2011	PAPER

Please find below and/or attached an Office communication concerning this application or proceeding.

The time period for reply, if any, is set in the attached communication.

UNITED STATES PATENT AND TRADEMARK OFFICE

Commissioner for Patents
United States Patent and Trademark Office
P.O. Box 1450
Alexandria, VA 22313-1450
www.uspto.gov

7/1/11

Christian Smith
2320 Ben Hur ct
San Jose CA 95124

In re Application of	:	
Smith	:	DECISION ON PETITION
Application No. 13/024,784	:	TO MAKE SPECIAL UNDER
Filed: 2/10/2011	:	THE GREEN TECHNOLOGY
Attorney Docket No. **snapvolt**	:	PILOT PROGRAM

This is a decision on the request for reconsideration, filed 5/23/2011, to make the above-identified application special under the pilot program for applications pertaining to Green Technologies as set forth in 74 Federal Register Notice 64666 (December 8, 2009) and amended by 75 Federal Register Notice 28554 (May 21, 2010) and 75 Federal Register Notice 69049 (November 10, 2010).

The petition is **GRANTED**.

A grantable petition to make an application special under 37 CFR 1.102 and the pilot program as set forth in 74 FR 64666 must be directed to a nonprovisional application filed under 35 USC 111(a) or be a national stage entry under 35 USC 371, exclusive of any reissue applications.

In order to qualify for special status, the following requirements must be met. 1) The application must have no more than 3 independent claims and no more than 20 total claims. 2) The application must not contain any multiple dependent claims. 3) The petition must state the basis for seeking special status, i.e., the claimed invention either: A) materially enhances the quality of the environment or B) materially contributes to: i) the discovery or development of renewable energy resources, ii) the more efficient utilization and conservation of energy resources, or iii) greenhouse gas emission reduction. 4) If the disclosure is not clear on its face that the claimed invention materially contributes under category (A) or (B), the petition must be accompanied by a statement by the applicant, assignee, or an attorney/agent registered to practice before the Office explaining how the materiality standard is met. 5) A statement that applicant will agree to make an election without traverse in a telephonic interview if a restriction requirement is made by the examiner. 6) The petition to make special must be filed electronically. 7) The petition must be filed at least one day prior to the date that a first Office Action appears in the Patent Application Information Retrieval (PAIR) system. 8) The petition must be accompanied by a request for early publication in compliance with 37 CFR 1.219 and include the publication fee as set forth in 37 CFR 1.18(d).

The requirement for a fee for consideration of the petition to make special for applications pertaining to Green Technologies has been waived.

The instant petition complies with items 1 – 8 above. Accordingly, the above-identified application has been accorded "special" status.

Telephone inquires concerning this decision should be directed to Tom Dunn at 571-272-1171.

The application is being forwarded to the Technology Center Art Unit 2123 for action on the merits commensurate with this decision.

/Tom Dunn/

Tom Dunn
Quality Assurance Specialist
Technology Center 1700

UNITED STATES PATENT AND TRADEMARK OFFICE

UNITED STATES DEPARTMENT OF COMMERCE
United States Patent and Trademark Office
Address: COMMISSIONER FOR PATENTS
P.O. Box 1450
Alexandria, Virginia 22313-1450
www.uspto.gov

APPLICATION NO.	FILING DATE	FIRST NAMED INVENTOR	ATTORNEY DOCKET NO.	CONFIRMATION NO.
13/024,874	02/10/2011	Ji Hyung MOON	3449-1631PUS1	1524

2292 7590 05/04/2011
BIRCH STEWART KOLASCH & BIRCH
PO BOX 747
FALLS CHURCH, VA 22040-0747

EXAMINER

ART UNIT	PAPER NUMBER
2811	

NOTIFICATION DATE	DELIVERY MODE
05/04/2011	ELECTRONIC

Please find below and/or attached an Office communication concerning this application or proceeding.

The time period for reply, if any, is set in the attached communication.

Notice of the Office communication was sent electronically on above-indicated "Notification Date" to the following e-mail address(es):

mailroom@bskb.com

UNITED STATES PATENT AND TRADEMARK OFFICE

Commissioner for Patents
United States Patent and Trademark Office
P.O. Box 1450
Alexandria, VA 22313-1450
www.uspto.gov

BIRCH STEWART KOLASCH & BIRCH
PO BOX 747
FALLS CHURCH VA 22040-0747

In re Application of
MOON et al.

Application No.: 13/024,874	**: DECISION ON REQUEST TO**
Filed: 10 February 2011	**: PARTICIPATE IN THE PATENT**
Attorney Docket No.: 3449-1631PUS1	**: PROSECUTION HIGHWAY**
For: LIGHT EMITTING DEVICE,	**: PROGRAM AND PETITION**
LIGHT EMITTING DEVICE	**: TO MAKE SPECIAL UNDER**
PACKAGE AND LIGHTING SYSTEM	**: 37 CFR 1.102(a)**

This is a decision on the request to participate in the Patent Prosecution Highway (PPH) program and the petition under 37 CFR 1.102(a), filed 25 February 2011, to make the above-identified application special.

The request and petition are **GRANTED**.

Discussion

A grantable request to participate in the PPH program and petition to make special require:

1. The U.S. application is

    a. a Paris Convention application which either
        i. validly claims priority under 35 U.S.C. 119(a) and 37 CFR 1.55 to one or more applications filed in the KIPO, or
        ii. validly claims priority under 35 U.S.C. 119(a)/365(a) to a PCT application that contains no priority claims,

    or

    b. a national stage application under the PCT (an application which entered the national stage in the U.S. from a PCT international application after compliance with 35 U.S.C. 371), which PCT application
        i. validly claims priority under 35 U.S.C. 365(b) to an application filed in the KIPO, or
        ii. validly claims priority under 35 U.S.C. 365(b) to a PCT application that contains no priority claims, or
        iii. contains no priority claim,

    or

    c. a so-called bypass application filed under 35 U.S.C. 111(a) which validly claims benefit under 35 U.S.C. 120 to a PCT application, which PCT application

i. validly claims priority under 35 U.S.C. 365(b) to an application filed in the KIPO, or
ii. validly claims priority under 35 U.S.C. 365(b) to a PCT application that contains no priority claims, or
iii. contains no priority claim;

2. Applicant must submit a copy of:
   a. The allowable/patentable claim(s) from the KR application(s);
   b. An English translation of the allowable/patentable claim(s), and
   c. A statement that the English translation is accurate (if the claims were published in a language other than English);
3. Applicant must:
   a. Ensure that all the claims in the U.S. application must sufficiently correspond or be amended to sufficiently correspond to the allowable/patentable claim(s) in the KR application(s), and
   b. Submit a claims correspondence table in English;
4. Examination of the U.S. application has not begun;
5. Applicant must submit:
   a. A copy of all the office actions (which are relevant to patentability), excluding "Decision to Grant a Patent" from each of the KR application(s) containing the allowable/patentable claim(s);
   b. An English language translation of the KIPO office action; and
   c. A statement that the English translation is accurate (if the office actions are not in the English language);
6. Applicant must submit:
   a. An IDS listing the documents cited by the KIPO examiner in the KIPO office action (unless already filed in this application); and
   b. Copies of all the documents cited in the KIPO office action, except U.S. patents or U.S. patent application publications (unless already filed in this application);

The request to participate in the PPH program and petition comply with the above requirements. Accordingly, the above-identified application has been accorded "special" status.

Any response must be submitted via EFS-Web.

Telephone inquiries concerning this decision should be directed to Lee W. Young at 571-272-4549.

All other inquiries concerning the examination or status of the application is accessible in the PAIR system at http://uspto.gov/ebc/index.html.

Lee W. Young
TQAS
Technology Center 2800 – Semiconductors
Electrical & Optical Systems & Components

UNITED STATES PATENT AND TRADEMARK OFFICE

UNITED STATES DEPARTMENT OF COMMERCE
United States Patent and Trademark Office
Address: COMMISSIONER FOR PATENTS
P.O. Box 1450
Alexandria, Virginia 22313-1450
www.uspto.gov

APPLICATION NO.	FILING DATE	FIRST NAMED INVENTOR	ATTORNEY DOCKET NO.	CONFIRMATION NO.
13/024,936	02/10/2011	David Johnson	LIUI136130	1645

26389 7590 04/11/2011
CHRISTENSEN, O'CONNOR, JOHNSON, KINDNESS, PLLC
1420 FIFTH AVENUE
SUITE 2800
SEATTLE, WA 98101-2347

EXAMINER
WILL, THOMAS B

ART UNIT	PAPER NUMBER
3671	

NOTIFICATION DATE	DELIVERY MODE
04/11/2011	ELECTRONIC

Please find below and/or attached an Office communication concerning this application or proceeding.

The time period for reply, if any, is set in the attached communication.

Notice of the Office communication was sent electronically on above-indicated "Notification Date" to the following e-mail address(es):

efiling@cojk.com

UNITED STATES PATENT AND TRADEMARK OFFICE

Commissioner for Patents
United States Patent and Trademark Office
P.O. Box 1450
Alexandria, VA 22313-1450
www.uspto.gov

APR - 8 2011

Christensen, O'Connor, Johnson, Kindness, PLLC
1420 Fifth Avenue
Suite 2800
Seattle, WA 98101-2347

In re application of Johnson et al. Application No. 13/024,936 Filed: February 10, 2011 Atty Docket No. LIUI136130 For: FOLD OUT RAMP	: : : : : :	**DECISION ON PETITION TO MAKE SPECIAL FOR NEW APPLICATION UNDER 37 CFR 1.102**

This is a decision on the petition filed on February 10, 2011 to make the above-identified application special for accelerated examination procedure under 37 C.F.R. § 1.102(d).

The petition to make the application special is **DISMISSED**.

REGULATION AND PRACTICE

A grantable petition to make special under 37 C.F.R. § 1.102(d) and pursuant to the "Change to Practice for Petitions in Patent Applications to Make Special and for Accelerated Examination" published in the Federal Register on June 26, 2006 (71 Fed. Reg. 36323), must satisfy the following conditions:

I. Conditions Regarding the Application:

1. the application must be a non-reissue utility or design application filed under 37 CFR 1.111(a);

2. the application, the petition and the required fees must be filed electronically using the USPTO's electronic filing system (EFS), or EFS-web; if not filed electronically, a statement asserting that EFS and EFS-web were not available during the normal business hours.

3. at the time of filing, the application must be complete under 37 CFR 1.51 and in condition for examination;

4. the application must contain three or fewer independent claims and twenty or fewer total claims and the claims must be directed to a single invention.

II. Conditions Regarding the Petition:

The petition must:

1. be filed with the application;

2. include a statement that applicant agrees not to separately argue the patentability of any dependent claim during any appeal in the application;

3. include a statement that applicant agrees to make an election without traverse in a telephone interview.

4. include a statement that applicant agrees to conduct such an interview when requested by the examiner.

5. include a statement, made based on a good faith belief, that a preexamination search in compliance with the following requirements, was conducted, including an identification of the field of search by United States class and subclass, where applicable, and for database searches, the search logic or chemical structure or sequence used as a query, the name of the file(s) searched and the database service, and the date of the search.

The preexamination search must:

5.1 involve U.S. patents and patent application publications, foreign patent documents, and non-patent literature, unless the applicant can justify with reasonable certainty that no references more pertinent than those already identified are likely to be found in the eliminated sources and includes such a justification with this statement;

5.2. be directed to the claimed invention and encompass all of the features of the claims, giving the claims the broadest reasonable interpretation;

5.3. encompass the disclosed features that may be claimed.

6. must provide in support of the petition an accelerated examination support document.

An accelerated examination support document must include:

6.1. an information disclosure statement (IDS) in compliance with 37 CFR 1.98 citing each reference deemed most closely related to the subject matter of each of the claims;

6.2. an identification of all the limitations in the claims that are disclosed by the reference specifying where the limitation is disclosed in the cited reference;

6.3. a detailed explanation of how each of the claims is patentable over the references cited with particularity required by 37 CFR 1.111(b) and (c);

6.4. a concise statement of the utility of the invention as defined in each of the independent claims (unless the application is a design application);

6.5. a showing of where each limitation of the claims finds support under 35 USC 112, first paragraph, in the written description of the specification. If applicable, the showing must also identify: (1) each means- (or step) plus-function claim element that invokes consideration under 35 USC 112, sixth paragraph; and (2) the structure, material, or acts in the specification that corresponds to each means- (or step) plus-function claim element that invokes consideration under 35 USC 112, sixth paragraph; if the application claims the benefit of one or more applications under title 35, United States Code, the showing must also include where each limitation of the claims finds support

under 35 USC 112, first paragraph, in each such application in which such supports exists;

6.6. an identification of any cited references that may be disqualified under 35 USC 103(c).

REVIEW OF FACTS

The petition in this case fails to comply with condition II.5.2.

As to condition II.5.2, the petition lacks an indication of a preexamination search that encompasses all of the features of the claims. Specifically, with respect to the classification search, in addition to the areas already searched, the search needs to include a search of 414/921.

Accordingly, the petition fails to meet the required conditions to be accorded special status under the accelerated examination procedure.

DECISION

For the above stated reasons, the petition is **DISMISSED**. The application will therefore be taken up by the examiner for action in its regular turn.

Petitioner is given a single opportunity to perfect the petition. Any request for reconsideration of this decision must be submitted within one (1) month or thirty (30) days, whichever is longer, from the date of this decision. No extensions of time will be granted under 37 CFR 1.136(a) if the request is to be considered timely. Any request for reconsideration must address the deficiencies indicated above.

Petitioner is reminded that, upon granting of the special status of the application on request for reconsideration, the application will be processed expeditiously. However, due to the dismissal of the instant petition, examination may not be completed within twelve months of the filing date of the application.

Any inquiry regarding this decision should be directed to Teri Luu at (571) 272-7045.

/Teri P. Luu/
Teri P. Luu
Quality Assurance Specialist
Technology Center 3600

TL/tl: 04/04/11

UNITED STATES PATENT AND TRADEMARK OFFICE

UNITED STATES DEPARTMENT OF COMMERCE
United States Patent and Trademark Office
Address: COMMISSIONER FOR PATENTS
P.O. Box 1450
Alexandria, Virginia 22313-1450
www.uspto.gov

APPLICATION NO.	FILING DATE	FIRST NAMED INVENTOR	ATTORNEY DOCKET NO.	CONFIRMATION NO.
13/024,936	02/10/2011	David Johnson	LIUI136130	1645

26389 7590 05/06/2011
CHRISTENSEN, O'CONNOR, JOHNSON, KINDNESS, PLLC
1420 FIFTH AVENUE
SUITE 2800
SEATTLE, WA 98101-2347

EXAMINER
HARTMANN, GARY S

ART UNIT	PAPER NUMBER
3671	

NOTIFICATION DATE	DELIVERY MODE
05/06/2011	ELECTRONIC

Please find below and/or attached an Office communication concerning this application or proceeding.

The time period for reply, if any, is set in the attached communication.

Notice of the Office communication was sent electronically on above-indicated "Notification Date" to the following e-mail address(es):

efiling@cojk.com

UNITED STATES PATENT AND TRADEMARK OFFICE

Commissioner for Patents
United States Patent and Trademark Office
P.O. Box 1450
Alexandria, VA 22313-1450
www.uspto.gov

MAY - 5 2011

Christensen, O'Connor, Johnson, Kindness, PLLC
1420 Fifth Avenue
Suite 2800
Seattle, WA 98101-2347

In re application of Johnson et al. Application No. 13/024,936 Filed: February 10, 2011 Atty Docket No. LIUI136130 For: FOLD OUT RAMP	: : : : : :	**DECISION ON PETITION TO MAKE SPECIAL FOR NEW APPLICATION UNDER 37 CFR 1.102**

This is a decision on the renewed petition filed on April 21, 2011 to make the above-identified application special for accelerated examination procedure under 37 C.F.R. § 1.102(d).

The petition to make the application special is **GRANTED**.

The application is eligible for accelerated examination and the petition complies with the conditions for granting the application special status pursuant to the "Change to Practice for Petitions in Patent Applications to Make Special and for Accelerated Examination" published June 26, 2006, in the Federal Register. (71 Fed. Reg. 36323).

The prosecution of the instant application will be conducted expeditiously according to the following guidelines.

1. The application will be docketed to an examiner and taken up for action within two weeks of the date of this decision.

2. Restriction Practice:
   If the examiner determines that the claims are not directed to a single invention, a telephone request to elect one single invention will be made pursuant to MPEP 812.01. As a prerequisite to the grant of this petition, the applicant has agreed to make an oral election, by telephone, without traverse. If the applicant refuses to make an election without traverse, or the examiner cannot reach the applicant after a reasonable effort, the examiner will treat the first claimed invention (invention defined by claim 1) as having being constructively elected without traverse for examination.

3. Office action:
If it is determined that, after appropriate consultation, there is a potential rejection or any other issue to be addressed, the examiner will telephone the applicant and arrange an interview to discuss and resolve the issue. An Office action, other than a Notice of Allowance and Fee(s) Due (Notice of Allowance), will not be issued unless either: 1) an interview was conducted but did not result in agreed to action that places the application in condition for allowance, or, 2) a determination is made that an interview would be unlikely to result in the application being placed in condition for allowance, and 3) an internal conference has been held to review any rejection of any claim.

4. Time for Reply:
An Office action other than a Notice of Allowance or a final Office action will set a shortened statutory period of one month or thirty days, whichever is longer, for reply with no extension of time available under 37 CFR 1.136(a). Failure to timely file a reply within this non-extendible period for reply will result in the abandonment of the application.

5. Reply by Applicant:
A timely reply to an Office action other than the Notice of Allowance must be submitted electronically via EFS or EFS-web and limited to addressing the rejections, objections and requirement made. Any amendment that attempts to: 1) add claims which would result in more than three pending independent claims or more than twenty pending total claims; 2) present claims not encompassed by the pre-examination search or an updated accelerated examination support document; or 3) present claims that are directed to a non-elected invention or an invention other than that previously claimed and examined in the application, will be treated as not fully responsive and will not be entered.

For any amendment to the claims (including any new claim) that is not encompassed by the accelerated examination support document, applicant must provide an updated accelerated examination support document that encompasses the amended or new claims at the time of filing of the amendment.

To proceed expeditiously with the examination, it is recommended that a reply with amendments made to any claim or with any new claim being added be accompanied by an updated accelerated examination support document or a statement explaining how the amended or new claim is supported by the original accelerated examination support document.

6. Information Disclosure Statement (IDS):
Any IDS filed during prosecution must be submitted electronically via EFS or EFS-web, accompanied by an updated accelerated examination support document, and be in compliance with 37 CFR 1.97 and 1.98.

7. Post-Allowance Processing:
To expedite processing of the allowed application into a patent, the applicant must: 1) pay the required fees within one month of the date of the Notice of Allowance, and 2) not file any post allowance papers not required by the Office. In no event may the issue fee be paid and accepted later than three months from the date of the Notice of Allowance.

8. After-Final and Appeal Procedures:
To expedite prosecution, after receiving the final Office action, applicant must: 1) promptly file a notice of appeal, an appeal brief and appeal fees; and 2) not request a pre-appeal brief conference.

   Any amendment, affidavit or other evidence filed after final Office action must comply with applicable rules and the requirements outlined in numbered paragraphs 5 and 6 above.

   On appeal, the application will proceed according to normal appeal procedures. After appeal, the application will again be treated special.

9. Proceedings Outside the Normal Examination Process:
If the application becomes involved in a proceeding that is outside the normal examination process (e.g., a secrecy order, national security review, interference proceeding, petitions under 37 CFR 1.181, 182 or 183), the application will be treated special before and after such proceeding.

10. Final Disposition:
The twelve month goal of this accelerated examination procedure ends with a final disposition. The mailing of a final Office action, a Notice of Allowance, the filing of a Notice of Appeal, or the filing of a Request for Continued Examination (RCE) is the final disposition.

If, during prosecution, a paper is not filed electronically using EFS-web, a reply is filed but is not fully responsive, the application is involved in an appeal, or a proceeding outside normal examination process, the application will still be examined expeditiously, however, the final disposition may occur more than twelve months from the filing of the application.

Any inquiry regarding this decision should be directed to Quality Assurance Specialist Teri P. Luu, at (571) 272-7045.

/Teri P. Luu/

Teri P. Luu
Special Program Examiner
Technology Center 3600

TL/tl: 05/04/11

PTO/SB/20PCT-KR (06-10)
Approved for use through 01/31/2012. OMB 0651-0058
U.S. Patent and Trademark Office; U. S. DEPARTMENT OF COMMERCE
Under the Paperwork Reduction Act of 1995, no persons are required to respond to a collection of information unless it displays a valid OMB control number.

REQUEST FOR PARTICIPATION IN THE PATENT COOPERATION TREATY - PATENT PROSECUTION HIGHWAY (PCT-PPH) PILOT PROGRAM BETWEEN THE KOREAN INTELLECTUAL PROPERTY OFFICE (KIPO) AND THE USPTO

Application No:	13/025,015	Filing date:	10 Feb 2011
First Named Inventor:	Solomon		
Title of the Invention:	Interactive Display System		

THIS REQUEST FOR PARTICIPATION IN THE PCT-PPH PILOT PROGRAM ALONG WITH THE REQUIRED DOCUMENTS MUST BE SUBMITTED VIA EFS-WEB. INFORMATION REGARDING EFS-WEB IS AVAILABLE AT HTTP://WWW.USPTO.GOV/EBC/EFS_HELP.HTML

APPLICANT HEREBY REQUESTS PARTICIPATION IN THE PCT-PPH PROGRAM AND PETITIONS TO MAKE THE ABOVE-IDENTIFIED APPLICATION SPECIAL UNDER THE PCT-PPH PROGRAM.

The above-identified application is (1) a national stage entry of the corresponding PCT application, or (2) a national stage entry of another PCT application which claims priority to the corresponding PCT application, or (3) a national application that claims domestic/ foreign priority to the corresponding PCT application, or (4) a national application which forms the basis for the priority claim in the corresponding PCT application, or (5) a continuing application of a U.S. application that satisfies one of (1) to (4) above, or (6) a U.S. application that claims domestic benefit to a U.S. provisional application which forms the basis for the priority claim in the corresponding PCT application.

The corresponding PCT application number(s) is/are: PCT/US2011/027376

The international filing date of the corresponding PCT application(s) is/are: 7 March 2011

I. List of Required Documents:

a. **A copy of the latest international work product (WO/ISA, WO/IPEA, or IPER) in the above–identified corresponding PCT application(s)**

☐ Is attached.

☑ Is not attached because the document is already in the U.S. application.

b. **A copy of all claims which were indicated as having novelty, inventive step and industrial applicability in the above-identified corresponding PCT application(s).**

☑ Is attached.

☐ Is not attached because the document is already in the U.S. application.

c. **English translations of the documents in a. and b. above are attached (if the documents are not in the English language). A statement that the English translation is accurate is attached for the document in b. above.**

This collection of information is required by 35 U.S.C. 119, 37 CFR 1.55, and 37 CFR 1.102(d). The information is required to obtain or retain a benefit by the public, which is to file (and by the USPTO to process) an application. Confidentiality is governed by 35 U.S.C. 122 and 37 CFR 1.11 and 1.14. This collection is estimated to take 2 hours to complete, including gathering, preparing, and submitting the completed application form to the USPTO. Time will vary depending upon the individual case. Any comments on the amount of time you require to complete this form and/or suggestions for reducing this burden should be sent to the Chief Information Officer, U.S. Patent and Trademark Office, U.S. Department of Commerce, P.O. Box 1450, Alexandria, VA 22313-1450. DO NOT SEND FEES OR COMPLETED FORMS TO THIS ADDRESS.

Approved for use through 01/31/2012. OMB 0651-0058
U.S.Patent and Trademark Office; U.S. DEPARTMENT OF COMMERCE
Under the Paperwork Reduction Act of 1995, no persons are required to respond to a collection of information unless it displays a valid OMB control number.

REQUEST FOR PARTICIPATION IN THE PCT-PPH PILOT PROGRAM BETWEEN THE KIPO AND THE USPTO

(continued)

Application No.:	13/025,015
First Named Inventor:	Solomon

d. **(1) An information disclosure statement listing the documents cited in the international work products (ISR, WO/ISA, WO/IPEA, IPER) of the corresponding PCT application.**

☐ Is attached

☑ Has already been filed in the above-identified U.S. application on 8 December 2011

(2) Copies of all documents (except) for U.S. patents or U.S. patent application publications)

☐ Are attached.

☑ Have already been filed in the above-identified U.S. application on 8 December 2011

II. Claims Correspondence Table:

Claims in US Application	Patentable Claims in the corresponding PCT Application	Explanation regarding the correspondence
2	2	Amended to be placed in independent form.
3	3	Amended to be placed in independent form.
5	5	Amended to be placed in independent form, and for clarity.
6	6	Amended to be placed in independent form.
7	7	Amended to be placed in independent form.
8	8	Amended to be placed in independent form, and for clarity.
9	9	Amended to be placed in independent form.
19	19	Amended to be placed in independent form.
20	20	Amended to be placed in independent form.
21	21	Amended to be placed in independent form, and for clarity.
22	22	Amended to be placed in independent form.
23	23	Amended to be placed in independent form.
24	24	Amended to be placed in independent form.
25	25	Amended to be placed in independent form.
26 - 39	26 - 39	Remain in original form; identical with the PCT claims.

III. All the claims in the US application sufficiently correspond to the patentable claims in the corresponding PCT application.

Signature /Rodney M Anderson/	Date 15 Dec 2011
Name (Print/Typed) Rodney M. Anderson	Registration Number 31939

Privacy Act Statement

The **Privacy Act of 1974 (P.L. 93-579)** requires that you be given certain information in connection with your submission of the attached form related to a patent application or patent. Accordingly, pursuant to the requirements of the Act, please be advised that: (1) the general authority for the collection of this information is 35 U.S.C. 2(b)(2); (2) furnishing of the information solicited is voluntary; and (3) the principal purpose for which the information is used by the U.S. Patent and Trademark Office is to process and/or examine your submission related to a patent application or patent. If you do not furnish the requested information, the U.S. Patent and Trademark Office may not be able to process and/or examine your submission, which may result in termination of proceedings or abandonment of the application or expiration of the patent.

The information provided by you in this form will be subject to the following routine uses:

1. The information on this form will be treated confidentially to the extent allowed under the Freedom of Information Act (5 U.S.C. 552) and the Privacy Act (5 U.S.C 552a). Records from this system of records may be disclosed to the Department of Justice to determine whether disclosure of these records is required by the Freedom of Information Act.
2. A record from this system of records may be disclosed, as a routine use, in the course of presenting evidence to a court, magistrate, or administrative tribunal, including disclosures to opposing counsel in the course of settlement negotiations.
3. A record in this system of records may be disclosed, as a routine use, to a Member of Congress submitting a request involving an individual, to whom the record pertains, when the individual has requested assistance from the Member with respect to the subject matter of the record.
4. A record in this system of records may be disclosed, as a routine use, to a contractor of the Agency having need for the information in order to perform a contract. Recipients of information shall be required to comply with the requirements of the Privacy Act of 1974, as amended, pursuant to 5 U.S.C. 552a(m).
5. A record related to an International Application filed under the Patent Cooperation Treaty in this system of records may be disclosed, as a routine use, to the International Bureau of the World Intellectual Property Organization, pursuant to the Patent Cooperation Treaty.
6. A record in this system of records may be disclosed, as a routine use, to another federal agency for purposes of National Security review (35 U.S.C. 181) and for review pursuant to the Atomic Energy Act (42 U.S.C. 218(c)).
7. A record from this system of records may be disclosed, as a routine use, to the Administrator, General Services, or his/her designee, during an inspection of records conducted by GSA as part of that agency's responsibility to recommend improvements in records management practices and programs, under authority of 44 U.S.C. 2904 and 2906. Such disclosure shall be made in accordance with the GSA regulations governing inspection of records for this purpose, and any other relevant (*i.e.*, GSA or Commerce) directive. Such disclosure shall not be used to make determinations about individuals.
8. A record from this system of records may be disclosed, as a routine use, to the public after either publication of the application pursuant to 35 U.S.C. 122(b) or issuance of a patent pursuant to 35 U.S.C. 151. Further, a record may be disclosed, subject to the limitations of 37 CFR 1.14, as a routine use, to the public if the record was filed in an application which became abandoned or in which the proceedings were terminated and which application is referenced by either a published application, an application open to public inspection or an issued patent.
9. A record from this system of records may be disclosed, as a routine use, to a Federal, State, or local law enforcement agency, if the USPTO becomes aware of a violation or potential violation of law or regulation.

UNITED STATES PATENT AND TRADEMARK OFFICE

Commissioner for Patents
United States Patent and Trademark Office
P.O. Box 1450
Alexandria, VA 22313-1450
www.uspto.gov

ANDERSON & LEVINE, L.L.P.
14785 PRESTON ROAD
SUITE 650
DALLAS TX 75254

MAILED
JAN 30 2012
OFFICE OF PETITIONS

In re Application of
SOLOMON, et al
Application No.: 13/025,015
Filed: February 10, 2011
Attorney Docket No.: INTR.P01
For: INTERACTIVE DISPLAY SYSTEM

: DECISION ON REQUEST TO
: PARTICIPATE IN THE PATENT
: PROSECUTION HIGHWAY
: PROGRAM AND PETITION
: TO MAKE SPECIAL UNDER
: 37 CFR 1.102(a)

This is a decision on the request to participate in the PCT Patent Prosecution Highway (PCT-PPH) pilot program and the petition under 37 CFR 1.102(a), filed on December 15, 2011 to make the above-identified application special.

The request and petition are **GRANTED**.

Discussion

A grantable request to participate in the PCT-PPH pilot program and petition to make special require:

(1) The U.S. application must have an eligible relationship to one or more PCT applications where the ISA or IPEA are the JPO, EPO, Australia, Austria, KIPO, NPI, Russia, Spain, Sweden, Finland, China or USPTO;

(2) At least one claim in the PCT application has novelty, inventive step, and industrial applicability and must be free of any observations in Box VIII in the latest work product in the international stage or applicant must identify and explain why the claim(s) is/are not subject to the observation in Box VIII;

(3) Applicant must submit a copy of the claim(s) from the PCT application(s) that have novelty, inventive step, and industrial applicability along with an English translation thereof and a statement that the English translation is accurate, if the claims are not in the English language;

(4) All the claims in the U.S. application must sufficiently correspond or be amended to sufficiently correspond to the claim(s) that have novelty, inventive step, and industrial applicability in the PCT application(s);

(5) Examination of the U.S. application has not begun;

(6) Applicant must submit a copy of the latest international work product from the PCT application indicating that the claim(s) have novelty, inventive step, and industrial applicability along with an English translation thereof and a statement that the English translation is accurate if the latest international work product is not in the English language;

(7) Applicant must submit an IDS listing the documents cited by the PCT examiner in the international work product along with copies of documents except U.S. patents or U.S. patent application publications.

The request to participate in the PCT-PPH pilot program and petition comply with the above requirements. Accordingly, the above-identified application has been accorded "special" status.

Telephone inquiries concerning this decision should be directed to the undersigned at (571) 272-6735.

All other inquiries concerning the examination or status of the application is accessible in the PAIR system at http://www.uspto.gov/ebc.index.html.

This application is being forwarded to Technology Center 2629 for action on the merits commensurate with this decision.

/Diane Goodwyn/
Diane Goodwyn
Petitions Examiner
Office of Petitions

UNITED STATES PATENT AND TRADEMARK OFFICE

Commissioner for Patents
United States Patent and Trademark Office
P.O. Box 1450
Alexandria, VA 22313-1450
www.uspto.gov

WILSON, SONSINI, GOODRICH & ROSATI
650 PAGE MILL ROAD
PALO ALTO CA 94304-1050

MAILED

JUL 20 2011

OFFICE OF PETITIONS

In re Application of	:	
Kraus et al.	:	DECISION ON PETITION
Application No. 13/025,046	:	TO WITHDRAW
Filed: February 10, 2011	:	FROM RECORD
Attorney Docket No. 38445-703.201	:	

This is a decision on the Request to Withdraw as attorney or agent of record under 37 C.F.R. § 1.36(b), filed July 1, 2011.

The request is **NOT APPROVED**.

The Office will only accept correspondence address changes to the most current address information provided for the assignee of the entire interest *who properly became of record under 37 CFR 3.71,* or, if no assignee of the entire interest has properly been made of record, the most current address information provided for the first named inventor. 37 CFR 3.71(c) states:

An assignee becomes of record either in a national patent application or a reexamination proceeding by filing a statement in compliance with § 3.73(b) that is signed by a party who is authorized to act on behalf of the assignee.

According to a review of current USPTO records petitioner has not requested the address be changed to a properly recorded assignee or the first listed inventor. Aubrey Helms, Jr. is neither the first named inventor nor the assignee who properly became of record under 37 CFR 3.71 As such, all future communications from the Office will continue to be directed to the above-listed address until otherwise notified by applicant.

Currently, there is no outstanding Office action that requires a reply.

Telephone inquires concerning this decision should be directed to the undersigned at (571) 272-7751.

/Joan Olszewski/
Joan Olszewski
Petitions Examiner
Office of Petitions

PTO/SB/20PCT-KR (06-10)
Approved for use through 01/31/2012. OMB 0651-0058
U.S. Patent and Trademark Office; U. S. DEPARTMENT OF COMMERCE
Under the Paperwork Reduction Act of 1995, no persons are required to respond to a collection of information unless it displays a valid OMB control number.

REQUEST FOR PARTICIPATION IN THE PATENT COOPERATION TREATY - PATENT PROSECUTION HIGHWAY (PCT-PPH) PILOT PROGRAM BETWEEN THE KOREAN INTELLECTUAL PROPERTY OFFICE (KIPO) AND THE USPTO

Application No:	13/025,051	Filing date:	February 10, 2011
First Named Inventor:	Detlef KOLL		
Title of the Invention:	Providing Computable Guidance to Relevant Evidence in Question-Answering Systems		

THIS REQUEST FOR PARTICIPATION IN THE PCT-PPH PILOT PROGRAM ALONG WITH THE REQUIRED DOCUMENTS MUST BE SUBMITTED VIA EFS-WEB. INFORMATION REGARDING EFS-WEB IS AVAILABLE AT HTTP://WWW.USPTO.GOV/EBC/EFS_HELP.HTML

APPLICANT HEREBY REQUESTS PARTICIPATION IN THE PCT-PPH PROGRAM AND PETITIONS TO MAKE THE ABOVE-IDENTIFIED APPLICATION SPECIAL UNDER THE PCT-PPH PROGRAM.

The above-identified application is (1) a national stage entry of the corresponding PCT application, or (2) a national stage entry of another PCT application which claims priority to the corresponding PCT application, or (3) a national application that claims domestic/ foreign priority to the corresponding PCT application, or (4) a national application which forms the basis for the priority claim in the corresponding PCT application, or (5) a continuing application of a U.S. application that satisfies one of (1) to (4) above, or (6) a U.S. application that claims domestic benefit to a U.S. provisional application which forms the basis for the priority claim in the corresponding PCT application.

The corresponding PCT application number(s) is/are: PCT/US2011/024405

The international filing date of the corresponding PCT application(s) is/are: Februrary 10, 2011

I. List of Required Documents:

a. **A copy of the latest international work product (WO/ISA, WO/IPEA, or IPER) in the above–identified corresponding PCT application(s)**

- [x] Is attached.
- [ ] Is not attached because the document is already in the U.S. application.

b. **A copy of all claims which were indicated as having novelty, inventive step and industrial applicability in the above-identified corresponding PCT application(s).**

- [x] Is attached.
- [ ] Is not attached because the document is already in the U.S. application.

c. **English translations of the documents in a. and b. above are attached (if the documents are not in the English language). A statement that the English translation is accurate is attached for the document in b. above.**

This collection of information is required by 35 U.S.C. 119, 37 CFR 1.55, and 37 CFR 1.102(d). The information is required to obtain or retain a benefit by the public, which is to file (and by the USPTO to process) an application. Confidentiality is governed by 35 U.S.C. 122 and 37 CFR 1.11 and 1.14. This collection is estimated to take 2 hours to complete, including gathering, preparing, and submitting the completed application form to the USPTO. Time will vary depending upon the individual case. Any comments on the amount of time you require to complete this form and/or suggestions for reducing this burden should be sent to the Chief Information Officer, U.S. Patent and Trademark Office, U.S. Department of Commerce, P.O. Box 1450, Alexandria, VA 22313-1450. DO NOT SEND FEES OR COMPLETED FORMS TO THIS ADDRESS.

Approved for use through 01/31/2012. OMB 0651-0058
U.S.Patent and Trademark Office; U.S. DEPARTMENT OF COMMERCE
Under the Paperwork Reduction Act of 1995, no persons are required to respond to a collection of information unless it displays a valid OMB control number.

REQUEST FOR PARTICIPATION IN THE PCT-PPH PILOT PROGRAM BETWEEN THE KIPO AND THE USPTO

(continued)

Application No.:	13/025,051
First Named Inventor:	Detlef KOLL

d. **(1) An information disclosure statement listing the documents cited in the international work products (ISR, WO/ISA, WO/IPEA, IPER) of the corresponding PCT application.**

☐ Is attached

☑ Has already been filed in the above-identified U.S. application on December 9, 2011

(2) Copies of all documents (except) for U.S. patents or U.S. patent application publications)

☐ Are attached.

☑ Have already been filed in the above-identified U.S. application on December 9, 2011

II. Claims Correspondence Table:

Claims in US Application	Patentable Claims in the corresponding PCT Application	Explanation regarding the correspondence
1-3	1-3	US claims 1-3 are identical to PCT claims 1-3.
4-5	1	US claims 4-5 are dependent on claim 1, and therefore "sufficiently correspond" to claim 1.
6	4	US claim 6 is identical to PCT claim 4.
7-8	4	US claims 7-8 are dependent on claim 6, and therefore "sufficiently correspond" to PCT claim 4.
9	5	US claim 9 is identical to PCT claim 5.
10-12	5	US claims 10-12 are dependent on claim 9, and therefore "sufficiently correspond" to PCT claim 5.
13	6	US claim 13 is identical to PCT claim 6.
14-16	1	US claims 14-16 are dependent on claim 1, and therefore "sufficiently correspond" to PCT claim 1.
17-26	7-16	US claims 17-26 are identical to PCT claims 7-16.
27	16	US claim 27 is dependent on claim 26, and therefore "sufficiently corresponds" to PCT claim 16.
28-29	17-18	US claims 28-29 are identical to PCT claims 17-18
30	18	US claim 30 is dependent on claim 29, and therefore "sufficiently correspond" to PCT claim 18.
31-36	19-23	US claims 31-36 are identical to PCT claims 19-23.
37-38	21	US claims 37-38 are dependent on claim 34, and therefore "sufficiently correspond" to PCT claim 21.
39	24	US claim 39 is identical to PCT claim 24.
40-41	24	US claims 40-41 are dependent on claim 39, and therefore "sufficiently correspond" to PCT claim 24.
42	25	US claim 42 is identical to PCT claim 25.
43-45	25	US claims 43-45 are dependent on claim 42, and therefore "sufficiently correspond" to PCT claim 25.
46	26	US claim 46 is identical to PCT claim 26.

III. All the claims in the US application sufficiently correspond to the patentable claims in the corresponding PCT application.

Signature /Robert Plotkin, Reg#43861/	Date January 2, 2012
Name (Print/Typed) Robert Plotkin, Esq.	Registration Number 43,861

Privacy Act Statement

The **Privacy Act of 1974 (P.L. 93-579)** requires that you be given certain information in connection with your submission of the attached form related to a patent application or patent. Accordingly, pursuant to the requirements of the Act, please be advised that: (1) the general authority for the collection of this information is 35 U.S.C. 2(b)(2); (2) furnishing of the information solicited is voluntary; and (3) the principal purpose for which the information is used by the U.S. Patent and Trademark Office is to process and/or examine your submission related to a patent application or patent. If you do not furnish the requested information, the U.S. Patent and Trademark Office may not be able to process and/or examine your submission, which may result in termination of proceedings or abandonment of the application or expiration of the patent.

The information provided by you in this form will be subject to the following routine uses:

1. The information on this form will be treated confidentially to the extent allowed under the Freedom of Information Act (5 U.S.C. 552) and the Privacy Act (5 U.S.C 552a). Records from this system of records may be disclosed to the Department of Justice to determine whether disclosure of these records is required by the Freedom of Information Act.
2. A record from this system of records may be disclosed, as a routine use, in the course of presenting evidence to a court, magistrate, or administrative tribunal, including disclosures to opposing counsel in the course of settlement negotiations.
3. A record in this system of records may be disclosed, as a routine use, to a Member of Congress submitting a request involving an individual, to whom the record pertains, when the individual has requested assistance from the Member with respect to the subject matter of the record.
4. A record in this system of records may be disclosed, as a routine use, to a contractor of the Agency having need for the information in order to perform a contract. Recipients of information shall be required to comply with the requirements of the Privacy Act of 1974, as amended, pursuant to 5 U.S.C. 552a(m).
5. A record related to an International Application filed under the Patent Cooperation Treaty in this system of records may be disclosed, as a routine use, to the International Bureau of the World Intellectual Property Organization, pursuant to the Patent Cooperation Treaty.
6. A record in this system of records may be disclosed, as a routine use, to another federal agency for purposes of National Security review (35 U.S.C. 181) and for review pursuant to the Atomic Energy Act (42 U.S.C. 218(c)).
7. A record from this system of records may be disclosed, as a routine use, to the Administrator, General Services, or his/her designee, during an inspection of records conducted by GSA as part of that agency's responsibility to recommend improvements in records management practices and programs, under authority of 44 U.S.C. 2904 and 2906. Such disclosure shall be made in accordance with the GSA regulations governing inspection of records for this purpose, and any other relevant (*i.e.*, GSA or Commerce) directive. Such disclosure shall not be used to make determinations about individuals.
8. A record from this system of records may be disclosed, as a routine use, to the public after either publication of the application pursuant to 35 U.S.C. 122(b) or issuance of a patent pursuant to 35 U.S.C. 151. Further, a record may be disclosed, subject to the limitations of 37 CFR 1.14, as a routine use, to the public if the record was filed in an application which became abandoned or in which the proceedings were terminated and which application is referenced by either a published application, an application open to public inspection or an issued patent.
9. A record from this system of records may be disclosed, as a routine use, to a Federal, State, or local law enforcement agency, if the USPTO becomes aware of a violation or potential violation of law or regulation.

UNITED STATES PATENT AND TRADEMARK OFFICE

Commissioner for Patents
United States Patent and Trademark Office
P.O. Box 1450

MAILED
FEB 13 2012
OFFICE OF PETITIONS

ROBERT PLOTKIN, PC
15 New England Executive Office Park
Burlington MA 01803

In re Application of
Detlef KOLL et al.
Application No. 13/025,051
Filed: February 10, 2011
Atty. Docket No.: M0002-1028
For: PROVIDING COMPUTABLE GUIDANCE TO RELEVANT EVIDENCE IN QUESTION-ANSWERING SYSTEMS

: DECISION ON REQUEST TO
: PARTICIPATE IN PCT-PPH PROGRAM
: AND PETITION TO MAKE SPECIAL
: UNDER 37 CFR 1.102(a)

This is a decision on the request to participate in the PCT Patent Prosecution Highway (PCT-PPH) program and the petition under 37 CFR 1.102(a), filed January 2, 2012, to make the above-identified application special.

The request and petition are **GRANTED**.

A grantable request to participate in the PCT –PPH program and petition to make special under 37 CFR 1.102(a) require:

(1) the U.S. application must have an eligible relationship to one or more PCT application where the ISA or IPEA are the JPO, EPO, KIPO, IPAU, Russia, Spain, Finland, Austria, or USPTO;

(2) at least one claim in the PCT application has novelty, inventive step, and industrial applicability and must be free of any observations in Box VIII in the latest work product in the international stage or applicant must identify and explain why the claim(s) is/are not subject to the observation in Box VIII;

(3) applicant must submit a copy of the claim(s) from the PCT application(s) that have novelty, inventive step, and industrial applicability along with an English translation thereof and a statement that the English translation is accurate, if the claims are not in the English language;

(4) all the claims in the U.S. application must sufficiently correspond or be amended to sufficiently correspond to the claim(s) that have novelty, inventive step, and industrial applicability in the PCT application(s);

(5) examination of the U.S. application has not begun;

(6) applicant must submit a copy of the latest international work product from the PCT application indicating that the claim(s) have novelty, inventive step, and industrial applicability along with an English translation thereof;

(7) applicant must submit an IDS listing the documents cited by the PCT examiner in the international work product along with copies of documents except U.S. patents or U.S. patent application publications; and

(8) applicant is required to submit a claims correspondence table in English which indicates how all the claims in the U.S. application correspond to the claims indicated as having novelty, inventive step, and industrial applicability in the latest international work product.

The request to participate in the PCT-PPH program and petition comply with the above requirements. Accordingly, the above-identified application has been accorded "special" status.

Telephone inquiries concerning this decision should be directed to Robert DeWitty, Petitions Attorney, Office of Petitions (571-272-8427). All other inquiries concerning the examination or status of the application is accessible in the PAIR system at http://www.uspto.gov/ebc.index.html.

This application will be forwarded to Technology Center Art Unit 2168 for action commensurate with this decision.

David Bucci
Petitions Examiner
Office of Petitions

PTO/SB/20PCT-KR (06-10)
Approved for use through 01/31/2012. OMB 0651-0058
U.S. Patent and Trademark Office; U. S. DEPARTMENT OF COMMERCE
Under the Paperwork Reduction Act of 1995, no persons are required to respond to a collection of information unless it displays a valid OMB control number.

REQUEST FOR PARTICIPATION IN THE PATENT COOPERATION TREATY - PATENT PROSECUTION HIGHWAY (PCT-PPH) PILOT PROGRAM BETWEEN THE KOREAN INTELLECTUAL PROPERTY OFFICE (KIPO) AND THE USPTO

Application No:	13/025,118	Filing date:	February 10, 2011
First Named Inventor:	Qi ZHAO		
Title of the Invention:	METHODS AND SYSTEMS FOR GENERATING SALIENCY MODELS THROUGH LINEAR AND/OR NONLINEAR INTEGRATION		

THIS REQUEST FOR PARTICIPATION IN THE PCT-PPH PILOT PROGRAM ALONG WITH THE REQUIRED DOCUMENTS MUST BE SUBMITTED VIA EFS-WEB. INFORMATION REGARDING EFS-WEB IS AVAILABLE AT HTTP://WWW.USPTO.GOV/EBC/EFS_HELP.HTML

APPLICANT HEREBY REQUESTS PARTICIPATION IN THE PCT-PPH PROGRAM AND PETITIONS TO MAKE THE ABOVE-IDENTIFIED APPLICATION SPECIAL UNDER THE PCT-PPH PROGRAM.

The above-identified application is (1) a national stage entry of the corresponding PCT application, or (2) a national stage entry of another PCT application which claims priority to the corresponding PCT application, or (3) a national application that claims domestic/ foreign priority to the corresponding PCT application, or (4) a national application which forms the basis for the priority claim in the corresponding PCT application, or (5) a continuing application of a U.S. application that satisfies one of (1) to (4) above, or (6) a U.S. application that claims domestic benefit to a U.S. provisional application which forms the basis for the priority claim in the corresponding PCT application.

The corresponding PCT application number(s) is/are: PCT/US2011/024414

The international filing date of the corresponding PCT application(s) is/are: February 10, 2011

I. List of Required Documents:

a. **A copy of the latest international work product (WO/ISA, WO/IPEA, or IPER) in the above–identified corresponding PCT application(s)**

☑ Is attached.

☐ Is not attached because the document is already in the U.S. application.

b. **A copy of all claims which were indicated as having novelty, inventive step and industrial applicability in the above-identified corresponding PCT application(s).**

☑ Is attached.

☐ Is not attached because the document is already in the U.S. application.

c. **English translations of the documents in a. and b. above are attached (if the documents are not in the English language). A statement that the English translation is accurate is attached for the document in b. above.**

This collection of information is required by 35 U.S.C. 119, 37 CFR 1.55, and 37 CFR 1.102(d). The information is required to obtain or retain a benefit by the public, which is to file (and by the USPTO to process) an application. Confidentiality is governed by 35 U.S.C. 122 and 37 CFR 1.11 and 1.14. This collection is estimated to take 2 hours to complete, including gathering, preparing, and submitting the completed application form to the USPTO. Time will vary depending upon the individual case. Any comments on the amount of time you require to complete this form and/or suggestions for reducing this burden should be sent to the Chief Information Officer, U.S. Patent and Trademark Office, U.S. Department of Commerce, P.O. Box 1450, Alexandria, VA 22313-1450. DO NOT SEND FEES OR COMPLETED FORMS TO THIS ADDRESS.

Approved for use through 01/31/2012. OMB 0651-0058
U.S.Patent and Trademark Office; U.S. DEPARTMENT OF COMMERCE
Under the Paperwork Reduction Act of 1995, no persons are required to respond to a collection of information unless it displays a valid OMB control number.

REQUEST FOR PARTICIPATION IN THE PCT-PPH PILOT PROGRAM BETWEEN THE KIPO AND THE USPTO

(continued)

Application No.:	13/025,118
First Named Inventor:	Qi ZHAO

d. **(1) An information disclosure statement listing the documents cited in the international work products (ISR, WO/ISA, WO/IPEA, IPER) of the corresponding PCT application.**

☑ Is attached

☐ Has already been filed in the above-identified U.S. application on _____

(2) Copies of all documents (except) for U.S. patents or U.S. patent application publications)

☑ Are attached.

☐ Have already been filed in the above-identified U.S. application on _____

II. Claims Correspondence Table:

Claims in US Application	Patentable Claims in the corresponding PCT Application	Explanation regarding the correspondence
1	1	US-1 identical to patentable PCT-1
2	2	US-2 identical to patentable PCT-2
3	3	US-3 identical to PCT-3 but does not depend on claim 2
4	4	US-4 identical to PCT-4 but does not depend claims 2-3
5	5	US-5 identical to PCT-5 but does not depend on claims 2-4
6	6	US-6 identical to patentable PCT-6
8	7	US-8 identical to PCT-7 but does not depend on claims 2-6
9	8	US-9 identical to PCT-8 but does not depend on claims 2-7
10	9	US-10 identical to PCT-9 but does not depend on claims 2-7
11	10	US-11 identical to patentable PCT-10
12	11	US-12 identical to patentable PCT-11
13	12	US-13 identical to PCT-12 but does not depend on claim 10
14	13	US-14 identical to patentable PCT-13
15	14	US-15 identical to PCT-14 but does not depend on claims 10, 12 & 13
16	15	US-16 identical to PCT-15 but does not depend on claims 10 & 12-14
17	16	US-17 identical to PCT-16 but does not depend on claims 10 & 12-15
18	17	US-18 identical to patentable PCT-17
19	18	US-19 identical to patentable PCT-18
20 & 21	19	US-20 & US-21 identical to PCT-3 but do not depend on claims 2-10 & 12-16

III. All the claims in the US application sufficiently correspond to the patentable claims in the corresponding PCT application.

Signature /Alessandro Steinfl, Reg. No. 56,448/	Date January 31, 2012
Name (Print/Typed) Alessandro Steinfl	Registration Number 56,448

UNITED STATES PATENT AND TRADEMARK OFFICE

Commissioner for Patents
United States Patent and Trademark Office
P.O. Box 1450
Alexandria, VA 22313-1450
www.uspto.gov
uninquivical

MAILED

MAR 29 2012

OFFICE OF PETITIONS

STEINFL & BRUNO LLP
155 N. LAKE AVE. STE 700
PASADENA, CA 91101

In re Application of
Qi Zhao, et al.
Application No.: 13/025,118
Filed: February 10, 2011
Attorney Docket No.: P716-US
For: **METHODS AND SYSTEMS FOR GENERATING SALIENCY MODELS THROUGH LINEAR AND/OR NONLINEAR INTEGRATION**

: DECISION ON REQUEST TO
: PARTICIPATE IN THE PATENT
: PROSECUTION HIGHWAY
: PROGRAM AND PETITION
: TO MAKE SPECIAL UNDER
: 37 CFR 1.102(a)

This is a decision on the request to participate in the PCT Patent Prosecution Highway (PCT-PPH) pilot program and the petition under 37 CFR 1.102(a), filed on January 31, 2012 to make the above-identified application special.

The request and petition are **GRANTED**.

Discussion

A grantable request to participate in the PCT-PPH pilot program and petition to make special require:

(1) The U.S. application must have an eligible relationship to one or more PCT applications where the ISA or IPEA are the JPO, EPO, KIPO, NPI, NBPR, IPAU, APO, RU, SPTO, PRV, SIPO or USPTO;

(2) At least one claim in the PCT application has novelty, inventive step, and industrial applicability and must be free of any observations in Box VIII in the latest work product in the international stage or applicant must identify and explain why the claim(s) is/are not subject to the observation in Box VIII;

(3) Applicant must submit a copy of the claim(s) from the PCT application(s) that have novelty, inventive step, and industrial applicability along with an English translation thereof and a statement that the English translation is accurate, if the claims are not in the English language;

(4) All the claims in the U.S. application must sufficiently correspond or be amended to sufficiently correspond to the claim(s) that have novelty, inventive step, and industrial applicability in the PCT application(s);

(5) Examination of the U.S. application has not begun;

(6) Applicant must submit a copy of the latest international work product from the PCT application indicating that the claim(s) have novelty, inventive step, and industrial applicability along with an English translation thereof and a statement that the English translation is accurate if the latest international work product is not in the English language;

(7) Applicant must submit an IDS listing the documents cited by the PCT examiner in the international work product along with copies of documents except U.S. patents or U.S. patent application publications.

(8) Applicant is required to submit a claims correspondence table in English which indicates how all the claims in the U.S. application correspond to the claims indicated as having novelty, inventive step and industrial applicability in the latest international work product.

The request to participate in the PCT-PPH pilot program and petition comply with the above requirements. Accordingly, the above-identified application has been accorded "special" status.

Telephone inquiries concerning this decision should be directed to the undersigned at 571-272-3204.

All other inquiries concerning the examination or status of the application is accessible in the PAIR system at http://www.uspto.gov/ebc.index.html.

This application will be forwarded to the examiner for action on the merits commensurate with this decision.

/SDB/

Sherry D. Brinkley
Petitions Examiner
Office of Petitions

UNITED STATES PATENT AND TRADEMARK OFFICE

Commissioner for Patents
United States Patent and Trademark Office
P.O. Box 1450
Alexandria, VA 22313-1450
www.uspto.gov

In re Application of
Clifford E. Gammons

Application No. 13025146

Filed:

Attorney Docket No. 09053-UPA

:DECISION ON PETITION TO MAKE SPECIAL
:UNDER 37 CFR 1.102(c)(1)

This is a decision on the electronic petition under 37 CFR 1.102 (c)(1), filed 14-FEB-2011 to make the above-identified application special based on applicant's age as set forth in MPEP § 708.02, Section IV.

The petition is **GRANTED**.

A grantable petition to make an application special under 37 CFR 1.102(c)(1), MPEP § 708.02, Section IV: Applicant's Age must include a statement by applicant or a registered practitioner having evidence that applicant is at least 65 years of age. No fee is required.

Accordingly, the above-identified application has been accorded "special" status and will be taken up for action by the examiner upon the completion of all pre-examination processing.

Telephone inquiries concerning this electronic decision should be directed to the Electronic Business Center at 866-217-9197.

All other inquiries concerning either the examination or status of the application should be directed to the Technology Center.

UNITED STATES PATENT AND TRADEMARK OFFICE

Commissioner for Patents
United States Patent and Trademark Office
P.O. Box 1450
Alexandria, VA 22313-1450
www.uspto.gov

DINSMORE & SHOHL LLP
FIFTH THIRD CENTER, ONE SOUTH MAIN STREET
SUITE 1300
DAYTON OH 45402-2023

MAILED
APR 08 2011
OFFICE OF PETITIONS

In re Application of	:	
SALYER, Ival O.	:	
Application No. 13/025,232	:	DECISION ON PETITION
Filed: February 11, 2011	:	TO MAKE SPECIAL UNDER
Attorney Docket No. **SAL 0009 IA/40675.25**	:	37 CFR 1.102(c)(1)
	:	

This is a decision on the petition under 37 CFR 1.102(c)(1), filed February 14, 2011, to make the above-identified application special based on applicant's age as set forth in M.P.E.P. § 708.02, Section IV.

The petition is **GRANTED**.

A grantable petition to make an application special under 37 CFR 1.102(c)(1) and MPEP § 708.02, Section IV: Applicant's Age must be accompanied by evidence showing that at least one of the applicants is 65 years of age, or more, such as a birth certificate or a statement by applicant. No fee is required

The instant petition includes a statement by Ival O. Salyer attesting that he is over 65 years of age. Accordingly, the above-identified application has been accorded "special" status.

Telephone inquiries concerning this decision should be directed to the undersigned at 571-272-4231.

All other inquiries concerning either the examination or status of the application should be directed to the Technology Center.

The application is being forwarded to the Technology Center Art Unit 1777 for action on the merits commensurate with this decision.

Michelle R. Eason

Michelle R. Eason
Paralegal Specialist
Office of Petitions

UNITED STATES PATENT AND TRADEMARK OFFICE

Commissioner for Patents
United States Patent and Trademark Office
P.O. Box 1450
Alexandria, VA 22313-1450
www.uspto.gov

Andrew Rosca
9 Maple Tree Ave. A1
Stamford CT 06906

MAILED
MAY 18 2011
OFFICE OF PETITIONS

In re Application of :
Zoltnik et al. :
Application No. 13/025336 :
Filing or 371(c) Date: 02/11/2011 :
Title of Invention: :
INTELLIGENT EXECUTION FOR :
BROKERAGE TRADE ORDERS : ON PETITION

This is a decision on the "Petition Under 37 C.F.R. 1.53(E)," requesting this Office accord the application a filing date of February 11, 2011. The petition is properly treated under 37 CFR 1.53(e).

The petition is granted.

The application was filed on February 11, 2011. On March 2, 2011, the Office of Patent Application Processing mailed a Notice of Incomplete Provisional Application (hereinafter "Notice"), informing Applicant that the application had NOT been accorded a filing date because the application had been deposited without drawings.

Applicant responds with the instant petition and avers that drawings are not necessary to establish a for establishing a filing date because the application as-filed contains method claims.

A review of the file reveals that the Applicant is correct, the specification contains method claims. As stated in MPEP § 601.01(f), it is the practice of the PTO to treat an application that contains at least one process, method or composition claim as an application for which a drawing is not necessary for an understanding of the invention under 35 U.S.C. 113 (first sentence).

MPEP § 601.01(f) also states that:

> A nonprovisional application having at least one claim, or a provisional application having at least some disclosure, directed to the subject matter discussed above for which a drawing is usually not considered essential for a filing date, describing drawing figure(s) in the specification, but filed without drawings will be treated as an application filed without all of the drawing figures referred to in the specification as discussed in MPEP § 601.01(g), so long as the application contains something that can be construed as a written description.

This application contains method claims; therefore, the application should have been treated as an application filed without all of the drawing figures referred to in the specification as discussed in MPEP § 601.01(g).

In applications filed without all of the drawing figure(s) referred to in the specification, the MPEP § 601.01(g) states that a "Notice of Omitted Item(s)" is mailed indicating that the application has been accorded a filing date, but is lacking some of the figures of drawings described in the specification.

In view of the above, the Notice mailed March 2, 2011, was mailed in error and is hereby withdrawn.

This application is being referred to the Office of Patent Application Processing, Customer Corrections, for further processing,

- with the filing date of February 11, 2011, and
- an indication that no drawings were present or required on filing.

The petition fee has been refunded to petitioner's credit card.

Telephone inquiries concerning this matter should be directed to the undersigned at (571-272-3232.

/DLW/

Derek L. Woods
Attorney
Office of Petitions

UNITED STATES PATENT AND TRADEMARK OFFICE

Commissioner for Patents
United States Patent and Trademark Office
P.O. Box 1450
Alexandria, VA 22313-1450
www.uspto.gov

ALLEN J OH LAW OFFICE
7200 FORESTVIEW LANE
MAPLE GROVE MN 55369

MAILED

APR 20 2011

OFFICE OF PETITIONS

In re Application of	:	
FOGARTY	:	
Application No. 13/025,364	:	DECISION ON PETITION
Filed: February 11, 2011	:	TO MAKE SPECIAL UNDER
Attorney Docket No. F001-004-01-US	:	37 CFR 1.102(c)(1)
	:	

This is a decision on the petition under 37 CFR 1.102(c)(1), filed March 3, 2011, to make the above-identified application special based on applicant's age as set forth in M.P.E.P. § 708.02, Section IV.

The petition is **GRANTED**.

A grantable petition to make an application special under 37 CFR 1.102(c)(1) and MPEP § 708.02, Section IV: Applicant's Age must be accompanied by evidence showing that at least one of the applicants is 65 years of age, or more, such as a birth certificate or a statement by applicant. No fee is required

The instant petition includes a statement made by registered attorney Allen J. Oh, which will be treated as the result of the attorney having evidence that at least one of the applicants is 65 years of age or more. In the event that such evidence is not with the attorney, the Office should be notified immediately. Accordingly, the above-identified application has been accorded "special" status.

Telephone inquiries concerning this decision should be directed to undersigned at (571) 272-6735.

All other inquiries concerning either the examination or status of the application should be directed to the Technology Center at (571) 272-3700.

The application is being forwarded to Technology Center Art Unit 3735 for action on the merits commensurate with this decision.

/Diane C. Goodwyn/
Diane C. Goodwyn
Petitions Examiner
Office of Petitions

UNITED STATES PATENT AND TRADEMARK OFFICE

Commissioner for Patents
United States Patent and Trademark Office
P.O. Box 1450
Alexandria, VA 22313-1450
www.uspto.gov

MAILED

JUL 28 2011

OFFICE OF PETITIONS

NIXON PEABODY, LLP
300 S. Riverside Plaza, 16th Floor
CHICAGO IL 60606-6613

In re Application of	:	
Ambrose, et al.	:	DECISION ON PETITION
Application No. 13/025,391	:	
Filed/Deposited: 11 February, 2011	:	
Attorney Docket No. 247161-000139USPT	:	

This is a decision on the petition filed on 13 July, 2011, pursuant to 37 C.F.R. §1.47.

NOTE:

The Office had questions as to this matter and sought to reach Petitioner but was unable to reach Petitioner in an effort to resolve the matter.

Petitioner may benefit from stepping through the requirements herein. (*See, generally:* MPEP §409.03, and §409.03(a)—the applicable statute (35 U.S.C.§ 116).

The petition as considered pursuant to 37 C.F.R. §1.47(a) is **DISMISSED**.

Rule 47 applicant is given TWO (2) MONTHS from the mailing date of this decision to reply, correcting the below-noted deficiencies. Any reply should be entitled "Request for Reconsideration of Petition Pursuant to 37 C.F.R. §1.47(a)," and should address the deficiencies noted below, except that the reply may include an oath or declaration executed by the non-signing inventor. **FAILURE TO RESPOND WILL RESULT IN ABANDONMENT OF THE APPLICATION.** Any extensions of time will be governed by 37 C.F.R. §1.136(a).

This is **not** a final agency action within the meaning of 5 U.S.C. §704.

A grantable petition pursuant to 37 C.F.R. §1.47(a) requires: (1) petition and fee; (2) proof that the non-signing inventor cannot be reached or refuses to sign the oath or declaration after having been presented with the application papers (specification: description, claims and drawings); (3) an acceptable oath or declaration in compliance with 35 U.S.C. §§ 115 and 116; and (4) a statement of the last known address of the non-signing inventor(s)—with diligence in the effort

to ascertain the validity of the address set forth as the reasonably believed to be last known/current/valid address.

Petitioner does not seem to have worked through the requirements of the petition, as set forth above, in satisfaction of those requirements. (*See, generally:* MPEP §409.03, and §409.03(a)—the applicable statute (35 U.S.C.§ 116).

In particular, Petitioner has not as of this writing satisfied the requirement(s) of the petition as listed above and discussed below.

Petitioners always are reminded that for transmission by Email of any document to be accepted by the Office, written acknowledgment of receipt and readability of the message and all applicable attachments of required materials must be provided.

BACKGROUND

The record reflects as follows:

The application was deposited on 11 February, 2011.

On 23 February, 2011, the Office mailed a Notice of Missing Parts, indicating therein the requirement, *inter alia*, for a fully executed oath/declaration.

On 13 July, 2011, Petitioner Justin M. Cook (Reg. No. 66,635) filed, *inter alia*, a request and fee for extension of time with a petition, with fee, pursuant to the regulations at 37 C.F.R. §1.47, an oath/declaration executed by co-inventors LaFort and van Hal for themselves and on behalf of non-signing inventors Stephen D. Ambrose (Mr. Ambrose), Samuel P. Guido (Mr. Guido) and Robert B. Schulein (Mr. Schulein) and an <u>averment</u> of transmittal of the entire application (description, claims, abstract, drawings) to the non-signing inventors (via Counsel) with oath/declaration and a request to sign—Petitioner included more than two hundred (200) pages of additional documentation and a declaration by Aart van Halteren, averred Chief Technology Officer of averred assignee, however, it is unclear that the entire final application (description, claims, abstract and drawings), as filed, was sent to the non-signing inventors (or, in view of ongoing litigation, to the non-signing inventors through their Cousel—in addition the copy of record of the statement by Aart van Halteren is faint). The Email transmissions upon which Petitioner depends apparently were not from him or directed to him, and it is unclear as to the intent of the messages submitted—i.e, were the materials transmitted in view of the requirements under the Rule, or were they transmitted as part of a discussion and negotiation as to related litigation. (It is noted that the Office sought to contact Petitioner by telephone in this regard, but was unable to reach him.) In view of these questions, it does not appear as of this writing that Petitioner has satisfied his burden under the Rule. Thus Petitioner failed to make the showing as required under the Rule (37 C.F.R. §1.47(a)) and consistent with the guidance in the Commentary at MPEP §409.03, and §409.03(a).

Petitioners always are reminded:

- *for transmission by Email of any document to be accepted by the Office, written acknowledgment of receipt and readability of the message and all applicable attachments of required materials must be provided; and*

- *of the duties of candor to—with requirement for diligent inquiry before—the Office and to satisfy the Rules of Practice and the guidance in the Commentary at MPEP §409.03, and §409.03(a), et seq.*

Petitioner will find it beneficial to step through the requirements of a grantable petition under 37 C.F.R. §1.47(a) (i.e., (1) petition and fee; (2) proof that the non-signing inventor cannot be reached or refuses to sign the oath or declaration after having been presented with the application papers (specification: description, claims and drawings); (3) an acceptable oath or declaration in compliance with 35 U.S.C. §§ 115 and 116; and (4) a statement of the last known address of the non-signing inventor(s)—with diligence in the effort to ascertain the validity of the address set forth as the reasonably believed to be last known/current/valid address) and satisfy himself that he has complied with these requirements on submission of any renewed petition. (*See also*: the guidance in the Commentary at MPEP §409.03, and §409.03(a), et seq.)

Again, Petitioner has not worked through the requirements of the petition.

Thus, the present incompleteness of the record makes granting of the instant petition inappropriate.

The availability of applications and application papers online to applicants/practitioners who diligently associate their Customer Number with the respective application(s) now provides an applicant/practitioner on-demand information as to events/transactions in an application. Thus, now if one wishes to know the progress in and/or status of an application or the accuracy of the data therein, one need only look at the file online.

Out of an abundance of caution, Petitioners always are reminded that those registered to practice *and* all others who make representations before the Office must inquire into the underlying facts of representations made to the Office and support averments with the appropriate documentation–since all owe to the Office the continuing duty to disclose.[1]

---

[1] See supplement of 17 June, 1999. The Patent and Trademark Office is relying on petitioner's duty of candor and good faith and accepting a statement made by Petitioner. See Changes to Patent Practice and Procedure, 62 Fed. Reg. at 53160 and 53178, 1203 Off. Gaz. Pat. Office at 88 and 103 (responses to comments 64 and 109)(applicant obligated under 37 C.F.R. §10.18 to inquire into the underlying facts and circumstances when providing statements to the Patent and Trademark Office). See specifically, the regulations at 37 C.F.R. §10.18.

Application No. 13/025,391

The instant petition pursuant to 37 C.F.R. §1.47(a) is **dismissed**.

Further correspondence with respect to this matter should be addressed as follows:

By mail: Mail Stop PETITIONS
Commissioner for Patents
Post Office Box 1450
Alexandria, VA 22313-1450

By hand: Customer Service Window
Mail Stop Petitions
Randolph Building
401 Dulany Street
Alexandria, VA 22314

By FAX: (571) 273-8300
ATTN: Office of Petitions

While telephone inquiries regarding this decision may be directed to the undersigned at (571) 272-3214—it is noted, however, that all practice before the Office is in writing (see: 37 C.F.R. §1.2[2]) and the proper authority for action on any matter in this regard are the statutes (35 U.S.C.), regulations (37 C.F.R.) and the commentary on policy (MPEP). Therefore, no telephone discussion may be controlling or considered authority for Petitioner's action(s).

/John J. Gillon, Jr./
John J. Gillon, Jr.
Senior Attorney
Office of Petitions

---

[2] The regulations at 37 C.F.R. §1.2 provide:

§1.2 Business to be transacted in writing.

All business with the Patent and Trademark Office should be transacted in writing. The personal attendance of applicants or their attorneys or agents at the Patent and Trademark Office is unnecessary. The action of the Patent and Trademark Office will be based exclusively on the written record in the Office. No attention will be paid to any alleged oral promise, stipulation, or understanding in relation to which there is disagreement or doubt.

UNITED STATES PATENT AND TRADEMARK OFFICE

Commissioner for Patents
United States Patent and Trademark Office
P.O. Box 1450
Alexandria, VA 22313-1450
www.uspto.gov

NIXON PEABODY, LLP
300 S. RIVERSIDE PLAZA, 16TH FLOOR
CHICAGO IL 60606-6613

MAILED

AUG 26 2011

OFFICE OF PETITIONS

In re Application of
Ambrose, et al.
Application No. 13/025,391
Filed/Deposited: 11 February, 2011
Attorney Docket No. 247161-000139USPT

DECISION ON PETITION

This is a decision on the petition filed on 26 August, 2011, pursuant to 37 C.F.R. §1.47.

The petition as considered pursuant to 37 C.F.R. §1.47(a) is **GRANTED**.

A grantable petition pursuant to 37 C.F.R. §1.47(a) requires: (1) petition and fee; (2) proof that the non-signing inventor cannot be reached or refuses to sign the oath or declaration after having been presented with the application papers (specification: description, claims and drawings); (3) an acceptable oath or declaration in compliance with 35 U.S.C. §§ 115 and 116; and (4) a statement of the last known address of the non-signing inventor(s)—with diligence in the effort to ascertain the validity of the address set forth as the reasonably believed to be last known/current/valid address.

Petitioners always are reminded that for transmission by Email of any document to be accepted by the Office, written acknowledgment of receipt and readability of the message and all applicable attachments of required materials must be provided.

BACKGROUND

The record reflects as follows:

The application was deposited on 11 February, 2011.

On 23 February, 2011, the Office mailed a Notice of Missing Parts, indicating therein the requirement, *inter alia*, for a fully executed oath/declaration.

On 13 July, 2011, Petitioner Justin M. Cook (Reg. No. 66,635) filed, *inter alia*, a request and fee for extension of time with a petition, with fee, pursuant to the regulations at 37 C.F.R. §1.47, an

oath/declaration executed by co-inventors LaFort and van Hal for themselves and on behalf of non-signing inventors Stephen D. Ambrose (Mr. Ambrose), Samuel P. Gido (Mr. Gido) and Robert B. Schulein (Mr. Schulein) and an averment of transmittal of the entire application (description, claims, abstract, drawings) to the non-signing inventors (via Counsel) with oath/declaration and a request to sign—Petitioner included more than two hundred (200) pages of additional documentation and a declaration by Aart van Halteren, averred Chief Technology Officer of averred assignee, however, it is unclear that the entire final application (description, claims, abstract and drawings), as filed, was sent to the non-signing inventors (or, in view of ongoing litigation, to the non-signing inventors through their Counsel—in addition the copy of record of the statement by Aart van Halteren was faint). The Email transmissions upon which Petitioner depends apparently were not from him or directed to him, and it is unclear as to the intent of the messages submitted—i.e, were the materials transmitted in view of the requirements under the Rule, or were they transmitted as part of a discussion and negotiation as to related litigation. (It is noted that the Office sought to contact Petitioner by telephone in this regard, but was unable to reach him.) In view of these questions, it did not appear that the requirements under the Rule were satisfied, and the petition was dismissed on 28 July, 2011.

On 26 August, 2011, Petitioner re-advanced his petition with a showing that the entire application (description, claims, abstract, drawings) were sent and delivered to Counsel for the non-signing inventor Ambrose, Gido and Schulein, and that the non-signing inventors failed to sign/join, and so constructively refused to sign/join. Therefore, it appears that Petitioner provided a showing satisfying the requirements under the Rule to wit: showing/proof that the non-signing inventor actually and/or constructively refused to sign the oath or declaration after having been presented with the application papers (specification: description, claims and drawings); an acceptable oath or declaration in compliance with 35 U.S.C. §§ 115 and 116; and a statement of the last known address of the non-signing inventor(s)—with diligence in the effort to ascertain the validity of the address set forth as the reasonably believed to be last known/current/valid address. Thus, Petitioner sought to satisfy the requirements pursuant to the Rule and the guidance in the Commentary at MPEP §409.03, and §409.03(a) et seq.), and provide a showing that the non-signing inventors could not be found/refused to sign after diligent effort.

The availability of applications and application papers online to applicants/practitioners who diligently associate their Customer Number with the respective application(s) now provides an applicant/practitioner on-demand information as to events/transactions in an application.

Out of an abundance of caution, Petitioners always are reminded that those registered to practice and all others who make representations before the Office **must** inquire into the underlying facts of representations made to the Office and support averments with the appropriate documentation–since all owe to the Office the continuing duty to disclose.[1]

---

[1] See supplement of 17 June, 1999. The Patent and Trademark Office is relying on petitioner's duty of candor and good faith and accepting a statement made by Petitioner. See Changes to Patent Practice and Procedure, 62 Fed. Reg. at 53160 and 53178, 1203 Off. Gaz. Pat. Office at 88 and 103 (responses to comments 64 and 109)(applicant obligated under 37 C.F.R. §11.18, formerly §10.18 to inquire into the underlying facts and circumstances when providing statements to the Patent and Trademark Office).

CONCLUSION

The instant petition under 37 C.F.R. §1.47(a) is **granted** (status is accorded pursuant to 37 C.F.R. §1.47(a).)

As provided in 37 C.F.R. §1.47(c), this Office will forward notice of this application's filing to the non-signing inventors at the addresses given in the petition. Notice of the filing of this application will also be published in the Official Gazette.

The instant application is released to the Office of Patent Application Processing (OPAP) for such processing as required in due course.

Telephone inquiries regarding this decision may be directed to the undersigned at (571) 272-3214—it is noted, however, that all practice before the Office is in writing (see: 37 C.F.R. §1.2[2]) and the proper authority for action on any matter in this regard are the statutes (35 U.S.C.), regulations (37 C.F.R.) and the commentary on policy (MPEP). Therefore, no telephone discussion may be controlling or considered authority for Petitioner's action(s).

/John J. Gillon, Jr./
John J. Gillon, Jr.
Senior Attorney
Office of Petitions

[2] The regulations at 37 C.F.R. §1.2 provide:
§1.2 Business to be transacted in writing.
All business with the Patent and Trademark Office should be transacted in writing. The personal attendance of applicants or their attorneys or agents at the Patent and Trademark Office is unnecessary. The action of the Patent and Trademark Office will be based exclusively on the written record in the Office. No attention will be paid to any alleged oral promise, stipulation, or understanding in relation to which there is disagreement or doubt

UNITED STATES PATENT AND TRADEMARK OFFICE

Commissioner for Patents
United States Patent and Trademark Office
P.O. Box 1450
Alexandria, VA 22313-1450
www.uspto.gov

STEPHEN D. AMBROSE
1257 WHITEHALL DRIVE
LONGMONT, CO 80504

MAILED

AUG 26 2011

OFFICE OF PETITIONS

In re Application of
Ambrose, et al.
Application No. 13/025,391
Filed/Deposited: 11 February, 2011
Attorney Docket No. 247161-000139USPT

COMMUNICATION

Dear Stephen D. Ambrose:

You are named as an inventor in the above-identified United States patent application, filed under the provisions of 35 U.S.C. §116 (United States Code), and 37 C.F.R. §1.47 (Code of Federal Regulations), Rules of Practice in Patent Cases. Should a patent be granted on the application you will be designated therein as an inventor.

As a named inventor you are entitled to inspect any paper in the file wrapper of the application, order copies of all or any part thereof (at a prepaid cost per 37 C.F.R. §1.19) or make your position of record in the application. Alternatively, you may arrange to do any of the preceding through a registered patent attorney or agent presenting written authorization from you. If you care to join the application, counsel of record (see below) would presumably assist you. Joining the application would entail the filing of an appropriate oath or declaration by you pursuant to 37 C.F.R. §1.63.

Should you elect to join in the application, the contact information for Counsel of Record is set forth at the end of this Communication.

Should you seek to identify independent Counsel, you may find the Patent Attorneys/Agents Search engine of assistance (https://oedci.uspto.gov/OEDCI/).

Requests for information regarding your application should be directed to the File Information Unit at (703) 308-2733. Information regarding how to pay for and order a copy of the application, or a specific paper in the application, should be directed to the Certification Division at (571) 272-3150 or 1 (800) 972-6382 (outside the Washington, DC area).

Telephone inquiries regarding this communication may be directed to the undersigned at (571) 272-3214—it is noted, however, that all practice before the Office is in writing (see: 37 C.F.R. §1.2[1]) and the proper authority for action on any matter in this regard are the statutes (35 U.S.C.), regulations (37 C.F.R.) and the commentary on policy (MPEP). Therefore, no telephone discussion may be controlling or considered authority for Petitioner's/your action(s) and/or inactions. Moreover, the Office can neither advise you nor recommend Counsel in this matter.

/John J. Gillon, Jr./
John J. Gillon, Jr.
Senior Attorney
Office of Petitions

Counsel of Record:
NIXON PEABODY, LLP
300 S. RIVERSIDE PLAZA, 16TH FLOOR
CHICAGO IL 60606-6613

[1] The regulations at 37 C.F.R. §1.2 provide:
§1.2 Business to be transacted in writing.
All business with the Patent and Trademark Office should be transacted in writing. The personal attendance of applicants or their attorneys or agents at the Patent and Trademark Office is unnecessary. The action of the Patent and Trademark Office will be based exclusively on the written record in the Office. No attention will be paid to any alleged oral promise, stipulation, or understanding in relation to which there is disagreement or doubt

UNITED STATES PATENT AND TRADEMARK OFFICE

Commissioner for Patents
United States Patent and Trademark Office
P.O. Box 1450
Alexandria, VA 22313-1450
www.uspto.gov

ROBERT B. SCHULEIN
10 EAST MONTEREY
SCHAUMBURG, IL 60193

MAILED

AUG 26 2011

OFFICE OF PETITIONS

In re Application of	:	
Ambrose, et al.	:	COMMUNICATION
Application No. 13/025,391	:	
Filed/Deposited: 11 February, 2011	:	
Attorney Docket No. 247161-000139USPT	:	

Dear Robert B. Schulein:

You are named as an inventor in the above-identified United States patent application, filed under the provisions of 35 U.S.C. §116 (United States Code), and 37 C.F.R. §1.47 (Code of Federal Regulations), Rules of Practice in Patent Cases. Should a patent be granted on the application you will be designated therein as an inventor.

As a named inventor you are entitled to inspect any paper in the file wrapper of the application, order copies of all or any part thereof (at a prepaid cost per 37 C.F.R. §1.19) or make your position of record in the application. Alternatively, you may arrange to do any of the preceding through a registered patent attorney or agent presenting written authorization from you. If you care to join the application, counsel of record (see below) would presumably assist you. Joining the application would entail the filing of an appropriate oath or declaration by you pursuant to 37 C.F.R. §1.63.

Should you elect to join in the application, the contact information for Counsel of Record is set forth at the end of this Communication.

Should you seek to identify independent Counsel, you may find the Patent Attorneys/Agents Search engine of assistance (https://oedci.uspto.gov/OEDCI/).

Requests for information regarding your application should be directed to the File Information Unit at (703) 308-2733. Information regarding how to pay for and order a copy of the application, or a specific paper in the application, should be directed to the Certification Division at (571) 272-3150 or 1 (800) 972-6382 (outside the Washington, DC area).

Telephone inquiries regarding this communication may be directed to the undersigned at (571) 272-3214—it is noted, however, that all practice before the Office is in writing (see: 37 C.F.R. §1.2[1]) and the proper authority for action on any matter in this regard are the statutes (35 U.S.C.), regulations (37 C.F.R.) and the commentary on policy (MPEP). Therefore, no telephone discussion may be controlling or considered authority for Petitioner's/your action(s) and/or inactions. Moreover, the Office can neither advise you nor recommend Counsel in this matter.

/John J. Gillon, Jr./
John J. Gillon, Jr.
Senior Attorney
Office of Petitions

Counsel of Record:
NIXON PEABODY, LLP
300 S. RIVERSIDE PLAZA, 16TH FLOOR
CHICAGO IL 60606-6613

[1] The regulations at 37 C.F.R. §1.2 provide:
§1.2 Business to be transacted in writing.
All business with the Patent and Trademark Office should be transacted in writing. The personal attendance of applicants or their attorneys or agents at the Patent and Trademark Office is unnecessary. The action of the Patent and Trademark Office will be based exclusively on the written record in the Office. No attention will be paid to any alleged oral promise, stipulation, or understanding in relation to which there is disagreement or doubt

UNITED STATES PATENT AND TRADEMARK OFFICE

Commissioner for Patents
United States Patent and Trademark Office
P.O. Box 1450
Alexandria, VA 22313-1450
www.uspto.gov

SAMUEL P GIDO
56 HUNTINGTON ROAD
HADLAY, MA 01565

MAILED

AUG 26 2011

OFFICE OF PETITIONS

In re Application of
Ambrose, et al.
Application No. 13/025,391
Filed/Deposited: 11 February, 2011
Attorney Docket No. 247161-000139USPT

COMMUNICATION

Dear Samuel P Gido:

You are named as an inventor in the above-identified United States patent application, filed under the provisions of 35 U.S.C. §116 (United States Code), and 37 C.F.R. §1.47 (Code of Federal Regulations), Rules of Practice in Patent Cases. Should a patent be granted on the application you will be designated therein as an inventor.

As a named inventor you are entitled to inspect any paper in the file wrapper of the application, order copies of all or any part thereof (at a prepaid cost per 37 C.F.R. §1.19) or make your position of record in the application. Alternatively, you may arrange to do any of the preceding through a registered patent attorney or agent presenting written authorization from you. If you care to join the application, counsel of record (see below) would presumably assist you. Joining the application would entail the filing of an appropriate oath or declaration by you pursuant to 37 C.F.R. §1.63.

Should you elect to join in the application, the contact information for Counsel of Record is set forth at the end of this Communication.

Should you seek to identify independent Counsel, you may find the Patent Attorneys/Agents Search engine of assistance (https://oedci.uspto.gov/OEDCI/).

Requests for information regarding your application should be directed to the File Information Unit at (703) 308-2733. Information regarding how to pay for and order a copy of the application, or a specific paper in the application, should be directed to the Certification Division at (571) 272-3150 or 1 (800) 972-6382 (outside the Washington, DC area).

Telephone inquiries regarding this communication may be directed to the undersigned at (571) 272-3214—it is noted, however, that all practice before the Office is in writing (see: 37 C.F.R. §1.2[1]) and the proper authority for action on any matter in this regard are the statutes (35 U.S.C.), regulations (37 C.F.R.) and the commentary on policy (MPEP). Therefore, no telephone discussion may be controlling or considered authority for Petitioner's/your action(s) and/or inactions. Moreover, the Office can neither advise you nor recommend Counsel in this matter.

/John J. Gillon, Jr./
John J. Gillon, Jr.
Senior Attorney
Office of Petitions

Counsel of Record:
NIXON PEABODY, LLP
300 S. RIVERSIDE PLAZA, 16TH FLOOR
CHICAGO IL 60606-6613

[1] The regulations at 37 C.F.R. §1.2 provide:
§1.2 Business to be transacted in writing.
All business with the Patent and Trademark Office should be transacted in writing. The personal attendance of applicants or their attorneys or agents at the Patent and Trademark Office is unnecessary. The action of the Patent and Trademark Office will be based exclusively on the written record in the Office. No attention will be paid to any alleged oral promise, stipulation, or understanding in relation to which there is disagreement or doubt

UNITED STATES PATENT AND TRADEMARK OFFICE

Commissioner for Patents
United States Patent and Trademark Office
P.O. Box 1450
Alexandria, VA 22313-1450
www.uspto.gov

In re Application of
Robert Magee Shivers

Application No. 13025459

Filed:

Attorney Docket No. 1260.035

:DECISION ON PETITION TO MAKE SPECIAL
:UNDER 37 CFR 1.102(c)(1)

This is a decision on the electronic petition under 37 CFR 1.102 (c)(1), filed 11-FEB-2011 to make the above-identified application special based on applicant's age as set forth in MPEP § 708.02, Section IV.

The petition is **GRANTED**.

A grantable petition to make an application special under 37 CFR 1.102(c)(1), MPEP § 708.02, Section IV: Applicant's Age must include a statement by applicant or a registered practitioner having evidence that applicant is at least 65 years of age. No fee is required.

Accordingly, the above-identified application has been accorded "special" status and will be taken up for action by the examiner upon the completion of all pre-examination processing.

Telephone inquiries concerning this electronic decision should be directed to the Electronic Business Center at 866-217-9197.

All other inquiries concerning either the examination or status of the application should be directed to the Technology Center.

PTO/SB/20PCT-KR (06-10)
Approved for use through 01/31/2015. OMB 0651-0058
U.S. Patent and Trademark Office; U.S DEPARTMENT OF COMMERCE
Under the Paperwork Reduction Act of 1995, no persons are required to respond to a collection of information unless it displays a valid OMB control number.

REQUEST FOR PARTICIPATION IN THE PATENT COOPERATION TREATY – PATENT PROSECUTION HIGHWAY (PCT-PPH) PILOT PROGRAM BETWEEN THE KOREAN INTELLECTUAL PROPERTY OFFICE (KIPO) AND THE USPTO

Application No.:	13/025,467	First Named Inventor:	Angelescu, Dan E.
Filing Date:	2/11/2011	Attorney Docket No.:	3397/102
Title of the Invention:	Passive Micro-vessel and Sensor		

THIS REQUEST FOR PARTICIPATION IN THE PCT-PPH PILOT PROGRAM ALONG WITH THE REQUIRED DOCUMENTS MUST BE SUBMITTED VIA EFS-WEB. INFORMATION REGARDING EFS-WEB IS AVAILABLE AT HTTP://WWW.USPTO.GOV/EBC/EFS_HELP.HTML.

APPLICANT HEREBY REQUESTS PARTICIPATION IN THE PCT-PPH PILOT PROGRAM AND PETITIONS TO MAKE THE ABOVE-IDENTIFIED APPLICATION SPECIAL UNDER THE PCT-PPH PILOT PROGRAM.

The above-identified application is (1) a national stage entry of the corresponding PCT application, or (2) a national stage entry of another PCT application which claims priority to the corresponding PCT application, or (3) a national application that claims domestic/ foreign priority to the corresponding PCT application, or (4) a national application which forms the basis for the priority claim in the corresponding PCT application, or (5) a continuing application of a U.S. application that satisfies one of (1) to (4) above, or (6) a U.S. application that claims domestic benefit to a U.S. provisional application which forms the basis for the priority claim in the corresponding PCT application.

The corresponding PCT application number(s) is/are: PCT/US11/24467

The international filing date of the corresponding PCT application(s) is/are: 2/11/2011

I. List of Required Documents:

a. **A copy of the latest international work product (WO/ISA, WO/IPEA, or IPER) in the above-identified corresponding PCT application(s)**

☐ is attached.

☑ is not attached because the document is already in the U.S. application.

b. **A copy of all claims which were indicated as having novelty, inventive step and industrial applicability in the above-identified corresponding PCT application(s)**

☑ is attached.

☐ is not attached because the document is already in the U.S. application.

c. **English translations of the documents in a. and b. above are attached (if the documents are not in the English language). A statement that the English translation is accurate is attached for the document in b. above.**

d. **(1) An information disclosure statement listing the documents cited in the international work products (ISR, WO/ISA, WO/IPEA, IPER) of the corresponding PCT application.**

☐ is attached.

☑ has already been filed in the above-identified U.S. application on 1/12/2012

(2) Copies of all documents (except for U.S. patents or U.S. patent application publications)

☑ are attached.

☑ have already been filed in the above-identified U.S. application on 1/12/2012, 1/30/2012

This collection of information is required by 35 U.S.C. 119, 37 CFR 1.55, and 37 CFR 1.102(d). The information is required to obtain or retain a benefit by the public, which is to file (and by the USPTO to process) an application. Confidentiality is governed by 35 U.S.C. 122 and 37 CFR 1.11 and 1.14. This collection is estimated to take 2 hours to complete, including gathering, preparing, and submitting the completed application form to the USPTO. Time will vary depending upon the individual case. Any comments on the amount of time you require to complete this form and/or suggestions for reducing this burden should be sent to the Chief Information Officer, U.S. Patent and Trademark Office, U.S. Department of Commerce, P.O. Box 1450, Alexandria, VA 22313-1450. DO NOT SEND FEES OR COMPLETED FORMS TO THIS ADDRESS.

Under the Paperwork Reduction Act of 1995, no persons are required to respond to a collection of information unless it displays a valid OMB control number.

REQUEST FOR PARTICIPATION IN THE PCT-PPH PILOT PROGRAM BETWEEN THE KIPO AND THE USPTO

(continued)

Application No.:	13/025,467	First Named Inventor:	Angelescu, Dan E

II. Claims Correspondence Table:

Claims in US Application	Patentable Claims in the corresponding PCT application	Explanation regarding the correspondence
1 - 19	1 - 19	
20 - 27	22 - 29	
28	33	
29	30	
30 - 38	72 - 80	

III. All the claims in the US application sufficiently correspond to the patentable claims in the corresponding PCT application.

Signature /Alexander J. Smolenski, Jr., #47,953/	Date March 8, 2012
Name (Print/Typed) Alexander J. Smolenski, Jr.	Registration Number 47,953

Privacy Act Statement

The **Privacy Act of 1974 (P.L. 93-579)** requires that you be given certain information in connection with your submission of the attached form related to a patent application or patent. Accordingly, pursuant to the requirements of the Act, please be advised that: (1) the general authority for the collection of this information is 35 U.S.C. 2(b)(2); (2) furnishing of the information solicited is voluntary; and (3) the principal purpose for which the information is used by the U.S. Patent and Trademark Office is to process and/or examine your submission related to a patent application or patent. If you do not furnish the requested information, the U.S. Patent and Trademark Office may not be able to process and/or examine your submission, which may result in termination of proceedings or abandonment of the application or expiration of the patent.

The information provided by you in this form will be subject to the following routine uses:

1. The information on this form will be treated confidentially to the extent allowed under the Freedom of Information Act (5 U.S.C. 552) and the Privacy Act (5 U.S.C 552a). Records from this system of records may be disclosed to the Department of Justice to determine whether disclosure of these records is required by the Freedom of Information Act.
2. A record from this system of records may be disclosed, as a routine use, in the course of presenting evidence to a court, magistrate, or administrative tribunal, including disclosures to opposing counsel in the course of settlement negotiations.
3. A record in this system of records may be disclosed, as a routine use, to a Member of Congress submitting a request involving an individual, to whom the record pertains, when the individual has requested assistance from the Member with respect to the subject matter of the record.
4. A record in this system of records may be disclosed, as a routine use, to a contractor of the Agency having need for the information in order to perform a contract. Recipients of information shall be required to comply with the requirements of the Privacy Act of 1974, as amended, pursuant to 5 U.S.C. 552a(m).
5. A record related to an International Application filed under the Patent Cooperation Treaty in this system of records may be disclosed, as a routine use, to the International Bureau of the World Intellectual Property Organization, pursuant to the Patent Cooperation Treaty.
6. A record in this system of records may be disclosed, as a routine use, to another federal agency for purposes of National Security review (35 U.S.C. 181) and for review pursuant to the Atomic Energy Act (42 U.S.C. 218(c)).
7. A record from this system of records may be disclosed, as a routine use, to the Administrator, General Services, or his/her designee, during an inspection of records conducted by GSA as part of that agency's responsibility to recommend improvements in records management practices and programs, under authority of 44 U.S.C. 2904 and 2906. Such disclosure shall be made in accordance with the GSA regulations governing inspection of records for this purpose, and any other relevant (*i.e.*, GSA or Commerce) directive. Such disclosure shall not be used to make determinations about individuals.
8. A record from this system of records may be disclosed, as a routine use, to the public after either publication of the application pursuant to 35 U.S.C. 122(b) or issuance of a patent pursuant to 35 U.S.C. 151. Further, a record may be disclosed, subject to the limitations of 37 CFR 1.14, as a routine use, to the public if the record was filed in an application which became abandoned or in which the proceedings were terminated and which application is referenced by either a published application, an application open to public inspection or an issued patent.
9. A record from this system of records may be disclosed, as a routine use, to a Federal, State, or local law enforcement agency, if the USPTO becomes aware of a violation or potential violation of law or regulation.

UNITED STATES PATENT AND TRADEMARK OFFICE

Commissioner for Patents
United States Patent and Trademark Office
P.O. Box 1450
Alexandria, VA 22313-1450
www.uspto.gov

In re Application of
Robert Magee Shivers

Application No. 13025477

Filed:

Attorney Docket No. 1260.036

:DECISION ON PETITION TO MAKE SPECIAL
:UNDER 37 CFR 1.102(c)(1)

This is a decision on the electronic petition under 37 CFR 1.102 (c)(1), filed 11-FEB-2011 to make the above-identified application special based on applicant's age as set forth in MPEP § 708.02, Section IV.

The petition is **GRANTED**.

A grantable petition to make an application special under 37 CFR 1.102(c)(1), MPEP § 708.02, Section IV: Applicant's Age must include a statement by applicant or a registered practitioner having evidence that applicant is at least 65 years of age. No fee is required.

Accordingly, the above-identified application has been accorded "special" status and will be taken up for action by the examiner upon the completion of all pre-examination processing.

Telephone inquiries concerning this electronic decision should be directed to the Electronic Business Center at 866-217-9197.

All other inquiries concerning either the examination or status of the application should be directed to the Technology Center.

UNITED STATES PATENT AND TRADEMARK OFFICE

Commissioner for Patents
United States Patent and Trademark Office
P.O. Box 1450
Alexandria, VA 22313-1450
www.uspto.gov

In re Application of
Robert Magee Shivers

Application No. 13025493

Filed:

Attorney Docket No. 1260.037

:DECISION ON PETITION TO MAKE SPECIAL
:UNDER 37 CFR 1.102(c)(1)

This is a decision on the electronic petition under 37 CFR 1.102 (c)(1), filed 11-FEB-2011 to make the above-identified application special based on applicant's age as set forth in MPEP § 708.02, Section IV.

The petition is **GRANTED**.

A grantable petition to make an application special under 37 CFR 1.102(c)(1), MPEP § 708.02, Section IV: Applicant's Age must include a statement by applicant or a registered practitioner having evidence that applicant is at least 65 years of age. No fee is required.

Accordingly, the above-identified application has been accorded "special" status and will be taken up for action by the examiner upon the completion of all pre-examination processing.

Telephone inquiries concerning this electronic decision should be directed to the Electronic Business Center at 866-217-9197.

All other inquiries concerning either the examination or status of the application should be directed to the Technology Center.

PTO/SB/20PCT-KR (06-10)
Approved for use through 01/31/2015. OMB 0651-0058
U.S. Patent and Trademark Office; U.S DEPARTMENT OF COMMERCE
Under the Paperwork Reduction Act of 1995, no persons are required to respond to a collection of information unless it displays a valid OMB control number.

REQUEST FOR PARTICIPATION IN THE PATENT COOPERATION TREATY – PATENT PROSECUTION HIGHWAY (PCT-PPH) PILOT PROGRAM BETWEEN THE KOREAN INTELLECTUAL PROPERTY OFFICE (KIPO) AND THE USPTO

Application No.:	13/025,534	First Named Inventor:	Noorman Bin Abu Hassan
Filing Date:	February 11, 2011	Attorney Docket No.:	A0215-00
Title of the Invention:	BREACH OR CONTAMINATION INDICATING ARTICLE HAVING MICROCAPSULES		

THIS REQUEST FOR PARTICIPATION IN THE PCT-PPH PILOT PROGRAM ALONG WITH THE REQUIRED DOCUMENTS MUST BE SUBMITTED VIA EFS-WEB. INFORMATION REGARDING EFS-WEB IS AVAILABLE AT HTTP://WWW.USPTO.GOV/EBC/EFS_HELP.HTML.

APPLICANT HEREBY REQUESTS PARTICIPATION IN THE PCT-PPH PILOT PROGRAM AND PETITIONS TO MAKE THE ABOVE-IDENTIFIED APPLICATION SPECIAL UNDER THE PCT-PPH PILOT PROGRAM.

The above-identified application is (1) a national stage entry of the corresponding PCT application, or (2) a national stage entry of another PCT application which claims priority to the corresponding PCT application, or (3) a national application that claims domestic/ foreign priority to the corresponding PCT application, or (4) a national application which forms the basis for the priority claim in the corresponding PCT application, or (5) a continuing application of a U.S. application that satisfies one of (1) to (4) above, or (6) a U.S. application that claims domestic benefit to a U.S. provisional application which forms the basis for the priority claim in the corresponding PCT application.

The corresponding PCT application number(s) is/are: PCT/US2011/048589

The international filing date of the corresponding PCT application(s) is/are: August 22, 2011

I. List of Required Documents:

a. **A copy of the latest international work product (WO/ISA, WO/IPEA, or IPER) in the above-identified corresponding PCT application(s)**

- ☑ is attached.
- ☐ is not attached because the document is already in the U.S. application.

b. **A copy of all claims which were indicated as having novelty, inventive step and industrial applicability in the above-identified corresponding PCT application(s)**

- ☑ is attached.
- ☐ is not attached because the document is already in the U.S. application.

c. **English translations of the documents in a. and b. above are attached (if the documents are not in the English language). A statement that the English translation is accurate is attached for the document in b. above.**

d. **(1) An information disclosure statement listing the documents cited in the international work products (ISR, WO/ISA, WO/IPEA, IPER) of the corresponding PCT application.**

- ☑ is attached.
- ☐ has already been filed in the above-identified U.S. application on _____

(2) Copies of all documents (except for U.S. patents or U.S. patent application publications)

- ☑ are attached.
- ☐ have already been filed in the above-identified U.S. application on _____

This collection of information is required by 35 U.S.C. 119, 37 CFR 1.55, and 37 CFR 1.102(d). The information is required to obtain or retain a benefit by the public, which is to file (and by the USPTO to process) an application. Confidentiality is governed by 35 U.S.C. 122 and 37 CFR 1.11 and 1.14. This collection is estimated to take 2 hours to complete, including gathering, preparing, and submitting the completed application form to the USPTO. Time will vary depending upon the individual case. Any comments on the amount of time you require to complete this form and/or suggestions for reducing this burden should be sent to the Chief Information Officer, U.S. Patent and Trademark Office, U.S. Department of Commerce, P.O. Box 1450, Alexandria, VA 22313-1450. DO NOT SEND FEES OR COMPLETED FORMS TO THIS ADDRESS.

Under the Paperwork Reduction Act of 1995, no persons are required to respond to a collection of information unless it displays a valid OMB control number.

REQUEST FOR PARTICIPATION IN THE PCT-PPH PILOT PROGRAM BETWEEN THE KIPO AND THE USPTO

(continued)

Application No.:	13/025,534	First Named Inventor:	Noorman Bin Abu Hassan

II. Claims Correspondence Table:

Claims in US Application	Patentable Claims in the corresponding PCT application	Explanation regarding the correspondence
1	1	Same
2	2	Same
3	12	PCT Claim 12 encompasses US Claims 3 and 15, and no more
4	3	Same
5	4	Same
6	5	Same
7	6	Same
8	9	PCT Claim 9 encompasses US Claims 8 and 9, and no more
9	9	PCT Claim 9 encompasses US Claims 8 and 9, and no more
10	7	Same
11	8	Same
12	11	PCT Claim 11 encompasses US Claims 12 and 18, and no more
13	15	Same
14	10	Same
15	12	PCT Claim 12 encompasses US Claims 3 and 15, and no more
16	13	Same
17	14	Same
18	11	PCT Claim 11 encompasses US Claims 12 and 18, and no more

III. All the claims in the US application sufficiently correspond to the patentable claims in the corresponding PCT application.

Signature /Arthur E. Jackson/	Date 05 April 2012
Name (Print/Typed) Arthur E Jackson	Registration Number 34,354

Privacy Act Statement

The **Privacy Act of 1974 (P.L. 93-579)** requires that you be given certain information in connection with your submission of the attached form related to a patent application or patent. Accordingly, pursuant to the requirements of the Act, please be advised that: (1) the general authority for the collection of this information is 35 U.S.C. 2(b)(2); (2) furnishing of the information solicited is voluntary; and (3) the principal purpose for which the information is used by the U.S. Patent and Trademark Office is to process and/or examine your submission related to a patent application or patent. If you do not furnish the requested information, the U.S. Patent and Trademark Office may not be able to process and/or examine your submission, which may result in termination of proceedings or abandonment of the application or expiration of the patent.

The information provided by you in this form will be subject to the following routine uses:

1. The information on this form will be treated confidentially to the extent allowed under the Freedom of Information Act (5 U.S.C. 552) and the Privacy Act (5 U.S.C 552a). Records from this system of records may be disclosed to the Department of Justice to determine whether disclosure of these records is required by the Freedom of Information Act.
2. A record from this system of records may be disclosed, as a routine use, in the course of presenting evidence to a court, magistrate, or administrative tribunal, including disclosures to opposing counsel in the course of settlement negotiations.
3. A record in this system of records may be disclosed, as a routine use, to a Member of Congress submitting a request involving an individual, to whom the record pertains, when the individual has requested assistance from the Member with respect to the subject matter of the record.
4. A record in this system of records may be disclosed, as a routine use, to a contractor of the Agency having need for the information in order to perform a contract. Recipients of information shall be required to comply with the requirements of the Privacy Act of 1974, as amended, pursuant to 5 U.S.C. 552a(m).
5. A record related to an International Application filed under the Patent Cooperation Treaty in this system of records may be disclosed, as a routine use, to the International Bureau of the World Intellectual Property Organization, pursuant to the Patent Cooperation Treaty.
6. A record in this system of records may be disclosed, as a routine use, to another federal agency for purposes of National Security review (35 U.S.C. 181) and for review pursuant to the Atomic Energy Act (42 U.S.C. 218(c)).
7. A record from this system of records may be disclosed, as a routine use, to the Administrator, General Services, or his/her designee, during an inspection of records conducted by GSA as part of that agency's responsibility to recommend improvements in records management practices and programs, under authority of 44 U.S.C. 2904 and 2906. Such disclosure shall be made in accordance with the GSA regulations governing inspection of records for this purpose, and any other relevant (*i.e.*, GSA or Commerce) directive. Such disclosure shall not be used to make determinations about individuals.
8. A record from this system of records may be disclosed, as a routine use, to the public after either publication of the application pursuant to 35 U.S.C. 122(b) or issuance of a patent pursuant to 35 U.S.C. 151. Further, a record may be disclosed, subject to the limitations of 37 CFR 1.14, as a routine use, to the public if the record was filed in an application which became abandoned or in which the proceedings were terminated and which application is referenced by either a published application, an application open to public inspection or an issued patent.
9. A record from this system of records may be disclosed, as a routine use, to a Federal, State, or local law enforcement agency, if the USPTO becomes aware of a violation or potential violation of law or regulation.

UNITED STATES PATENT AND TRADEMARK OFFICE

Commissioner for Patents
United States Patent and Trademark Office
P.O. Box 1450
Alexandria, VA 22313-1450
www.uspto.gov

MALLOY & MALLOY
2800 S.W. THIRD AVENUE
HISTORIC CORAL WAY
MIAMI, FL 33129

MAILED

FEB 08 2012

OFFICE OF PETITIONS

In re Application of	:	
Bernardo Maribona	:	
Application No. 13/025,549	:	DECISION ON PETITION
Filed: February 11, 2011	:	TO WITHDRAW FROM
Attorney Docket No. 1.917.11	:	RECORD

This is a decision on the Request to Withdraw as attorney or agent of record under 37 CFR §§ 1.36(b) or 37 CFR 10.40, filed December 20, 2011.

The request is **APPROVED**.

The request was signed by John Fulton, Jr. on behalf of himself and all the attorneys/agents of record. Therefore, John Fulton, Jr. and all the attorneys/agents of record have been withdrawn.

Applicant is reminded that there are no attorneys/agents of record at this time.

All future communications from the Office will be directed to the sole inventor at the address listed below until otherwise properly notified by the applicant.

Telephone inquiries concerning this decision should be directed to the undersigned at (571) 272-3226.

/Andrea Smith/
Andrea Smith
Petitions Examiner
Office of Petitions

cc: Bernardo Maribona
3320 N.E. 164 Street
North Miami Beach, FL 33160

UNITED STATES PATENT AND TRADEMARK OFFICE

UNITED STATES DEPARTMENT OF COMMERCE
United States Patent and Trademark Office
Address: COMMISSIONER FOR PATENTS
PO Box 1450
Alexandria, Virginia 22313-1450
www.uspto.gov

APPLICATION NUMBER	FILING OR 371(C) DATE	FIRST NAMED APPLICANT	ATTY. DOCKET NO./TITLE
13/025,549	02/11/2011	Bernardo Maribona	1.917.11

CONFIRMATION NO. 2892

POWER OF ATTORNEY NOTICE

4219
MALLOY & MALLOY
2800 S.W. THIRD AVENUE
HISTORIC CORAL WAY
MIAMI, FL 33129

OC000000052347563

Date Mailed: 02/01/2012

NOTICE REGARDING CHANGE OF POWER OF ATTORNEY

This is in response to the Power of Attorney filed 12/20/2011.

- The withdrawal as attorney in this application has been accepted. Future correspondence will be mailed to the new address of record. 37 CFR 1.33.

/amsmith/

Office of Data Management, Application Assistance Unit (571) 272-4000, or (571) 272-4200, or 1-888-786-0101

UNITED STATES PATENT AND TRADEMARK OFFICE

Commissioner for Patents
United States Patent and Trademark Office
P.O. Box 1450
Alexandria, VA 22313-1450
www.uspto.gov

MAY 11 2011

Harness Dickey & Pierce (Biomet)
5445 Corporate Drive
Suite 200
Troy MI 48098

In re Application of: Berelsman et al.
Application No.: 13/025597
Filed: February 11, 2011
Title: MODULAR PROSTHESIS AND USE THEREOF FOR REPLACING A RADIAL HEAD

DECISION ON PETITION TO MAKE SPECIAL FOR NEW APPLICATION UNDER 37 C.F.R. § 1.102 & M.P.E.P. § 708.02

This is a decision on the petition filed on February 11, 2011 to make the above-identified application special for accelerated examination procedure under 37 C.F.R. § 1.102(d).

The petition to make the application special is **DISMISSED**.

REGULATION AND PRACTICE

A grantable petition to make special under 37 C.F.R. § 1.102(d) and pursuant to the "Change to Practice for Petitions in Patent Applications to Make Special and for Accelerated Examination" published in the Federal Register on June 26, 2006 (71 Fed. Reg. 36323), must satisfy the following conditions:

I. Conditions Regarding the Application:

1. the application must be a non-reissue utility or design application filed under 37 CFR 1.111(a);
2. the application, the petition and the required fees must be filed electronically using the USPTO's electronic filing system (EFS), or EFS-web; if not filed electronically, a statement asserting that EFS and EFS-web were not available during the normal business hours.
3. at the time of filing, the application must be complete under 37 CFR 1.51 and in condition for examination;
4. the application must contain three or fewer independent claims and twenty or fewer total claims and the claims must be directed to a single invention.

II. Conditions Regarding the Petition:

The petition must:

1. be filed with the application;
2. include a statement that applicant agrees not to separately argue the patentability of any independent claim during any appeal in the application;

3. include a statement that applicant agrees to make an election without traverse in a telephone interview.

4. include a statement that applicant agrees to conduct such an interview when requested by the examiner.

5. include a statement, made based on a good faith belief, that a preexamination search in compliance with the following requirements, was conducted, including an identification of the field of search by United States class and subclass, where applicable, and for database searches, the search logic or chemical structure or sequence used as a query, the name of the file(s) searched and the database service, and the date of the search.

The preexamination search must:

5.1 involve U.S. patents and patent application publications, foreign patent documents, and non-patent literature, unless the applicant can justify with reasonable certainty that no references more pertinent than those already identified are likely to be found in the eliminated sources and includes such a justification with this statement;

5.2. be directed to the claimed invention and encompass all of the features of the claims, giving the claims the broadest reasonable interpretation;

5.3. encompass the disclosed features that may be claimed.

6. must provide in support of the petition an accelerated examination support document. An accelerated examination support document must include:

6.1. an information disclosure statement (IDS) in compliance with 37 CFR 1.98 citing each reference deemed most closely related to the subject matter of each of the claims;

6.2. an identification of all the limitations in the claims that are disclosed by the reference specifying where the limitation is disclosed in the cited reference;

6.3. a detailed explanation of how each of the claims are patentable over the references cited with particularity required by 37 CFR 1.111(b) and (c);

6.4. a concise statement of the utility of the invention as defined in each of the independent claims (unless the application is a design application);

6.5. a showing of where each limitation of the claims finds support under 35 U.S.C. 112, first paragraph, in the written description of the specification. If applicable, the showing must also identify: (1) each means- (or step) plus-function claim element that invokes consideration under 35 U.S.C. 112, sixth paragraph; and (2) the structure, material, or acts in the specification that corresponds to each means- (or step) plus-function claim element that invokes consideration under 35 U.S.C. 112, sixth paragraph; if the application claims the benefit of one or more applications under title 35, United States Code, the showing must also include where each limitation of the claims finds support under 35 U.S.C. 112, first paragraph, in each such application in which such supports exists;

6.6. an identification of any cited references that may be disqualified under 35 U.S.C. 103(c).

REVIEW OF FACTS

The conditions I:1-4, II: 1-5, 5.3, 6, 6.1, and 6.6 above are considered to have been met. However, the petition fails to comply with conditions II : 5.1, 5.2, 6.2, 6.3, 6.4 and 6.5 above.

Therefore, the petition fails to meet the required conditions to be accorded special status under the accelerated examination procedure.

Discussion

When referring to "the petition" hereinbelow, the received papers under consideration include the PTO/SB/28 form, the "pre-examination search document" including pages 1-4; the "accelerated examination support document" comprising pages 1-19, and an Information Disclosure Statement including form PTO/SB/08A.

Regarding the requirements of section II element 5.1 and 5.2 outlined above, it appears the search outlined in the petition omitted a critical search area by not searching in class 623 subclass 17.11. Searching in class 606 subclasses 63, 64, and 99 also appear on point.

Regarding the requirements of section II element 6.2 outlined above, the petition fails to identify all of the limitations in the application claims that are disclosed in each of the reference(s) and where the limitation is disclosed in each of the cited reference. As stated in the policy published in the Federal Register on June 26, 2006 (71 Fed. Reg. 36323), for each reference cited, the examination support document must include an identification of all the limitations in the claims that are disclosed by the reference specifying where the limitation is disclosed in the cited reference. The policy statement does not caveat "the independent claims", nor does it allow for grouping and general discussions. A grantable petition must delineate every limitation of every claim and identify where the equivalent limitation is disclosed in each piece of prior art cited on the IDS. As is published on www.uspto.gov/web/patents/accelerated/ in "Guidelines for Applicants under the new accelerated examination procedures"):

> *For each reference cited, the accelerated examination support document must include an identification of all the limitations in the claims that are disclosed by the reference specifying where the limitation is disclosed in the cited reference. Applicants should specify where in each of the cited references the particular claim limitations are found. This process is intended to be analogous to the analysis an examiner uses when locating a relevant prior art reference and then determining whether the reference contains the claimed limitation. For each claimed limitation, the examiner would consider the disclosure of the reference and all reasonable portions in the reference where the limitation is shown. When preparing an Office Action, the examiner would correlate the limitation to the portion of reference which best characterizes the limitation. This part of the AESD is not intended to be an exhaustive listing of every conceivable subjective interpretation of how a claim limitation may read on the reference. Applicants should point out what are considered to be the relevant representations of the limitation in the reference. A limitation may be found in more than one portion of the reference and should be pointed out, yet the intention is not to have applicants point out every conceivable interpretation. The USPTO will adopt a rule of reason when evaluating this portion of the AESD. Unless the representation is so deficient that it would materially effect examination of the application (e.g., numerous instances where the limitations are not shown where applicant states they are), the representation will be deemed to be sufficient for this part of the AESD.*

In the instant petition, the references from the IDS filed March 25, 2011 have not been addressed in a supplemental AESD. If applicant wishes to cite references that are not required in an AESD for the examiner to consider, applicant may submit such references in a separate IDS in compliance with 37 CFR §1.97 and §1.98. Applicant should clearly identify the IDS of the AESD that is in support of the petition to make special and, similarly, applicant should clearly identify the separate IDS that is not in support of the petition. Consistent with 37 CFR §10.18, any reference submitted in a separate IDS that is not part of an AESD will be treated as a representation by applicant to the USPTO that no reference submitted in the separate IDS is deemed closer to the subject matter of at least one claim than the references provided in the AESD.

Similarly, with respect to the requirements of section II element 6.3 outlined above, the petition fails to provide a detailed explanation of how each of the claims are patentable over (each of) the reference(s) with particularity required by 37 CFR 1.111(b) and (c). Petitioners should be specific in their explanation and include the identification of specific claim limitations that support their position, where appropriate. Petitioners must distinguish each claim from each piece of prior art cited. General statements that the claims are neither anticipated nor rendered obvious by the cited references or that the references are not properly combinable will not be acceptable. The Office cannot infer or guess what petitioner believes the differences between the claims and the teachings of the prior art to be. Petitioner's statements must also be consistent and must be related to the claim language.
The additional references in the IDS filed on March 25, 2011 have not been discussed.

Regarding the requirements of section II element 6.4 outlined above, the petition fails to identify a concise statement of the utility of the invention as defined in each of the independent claims. A general statement directed to the overall concept of the invention is not specifically relating the utility to each of the independent claims as is required by the policy. Petitioner should reference the independent claims specifically when discussing the utility of the invention.

Regarding the requirements of section II element 6.5 outlined above, the requirements of this section are not met. A grantable petition requires petitioner to provide a showing of where <u>each limitation</u> of the claims finds support under 35 U.S.C. 112, first paragraph, in the written description of the specification. If applicable, the showing must also identify: (1) each means- (or step) plus-function claim element that invokes consideration under 35 U.S.C. 112, sixth paragraph; and (2) the structure, material, or acts in the specification that corresponds to each means- (or step) plus-function claim element that invokes consideration under 35 U.S.C. 112, sixth paragraph; if the application claims the benefit of one or more applications under title 35, United States Code, the showing must also include where each limitation of the claims finds support under 35 U.S.C. 112, first paragraph, in each such application in which such supports exists. In the instant petition, all limitations must include reference to a portion of the written description and not just figures. For example in claim 1, the limitation "said stem having a first coupling portion and first and second sides which are generally parallel to the longitudinal axis" only refers to figures as does the limitations for claims 3, 5 and 6. Petitioner should carefully check all claims for this issue in both the present application and all of the priority applications. Additionally, since the priority documents do not have the same number of paragraphs and figures, they cannot be grouped together. For example, provisional application 61/195444 does

not include figures 15 and 16. As such, showing of support must be shown separately for applications 10/999297, 10/464043, 09/828745 and 61/195444.

DECISION

For the above-stated reasons, the petition is **dismissed**. The application will therefore be taken up by the examiner for action in its regular turn.

Petitioner is given a single opportunity to perfect the petition. Any request for reconsideration of this decision must be submitted within 1 (one) month or 30 (thirty) days, whichever is longer, (no extension of time under 37 CFR 1.136(a)) from the date of this decision in order to be considered timely. Any request for reconsideration must address all of the deficiencies indicated above.

Petitioner is reminded that, upon granting of the special status of the application on request for reconsideration, the application will be processed expeditiously. However, due to the dismissal of the instant petition, examination may not be completed within twelve months of the filing date of the application.

Any inquiry regarding this decision should be directed to Linda J. Sholl, TC 3700 Special Programs Examiner, at (571) 272-4391.

/Linda J. Sholl/
Linda J. Sholl
Special Programs Examiner
Technology Center 3700

UNITED STATES PATENT AND TRADEMARK OFFICE

Commissioner for Patents
United States Patent and Trademark Office
P.O. Box 1450
Alexandria, VA 22313-1450
www.uspto.gov

JUL 14 2011

Harness Dickey & Pierce (Biomet)
5445 Corporate Drive
Suite 200
Troy MI 48098

In re Application of: Berelsman et al. Application No.: 13/025597 Filed: February 11, 2011 Title: MODULAR PROSTHESIS AND USE THEREOF FOR REPLACING A RADIAL HEAD	DECISION ON PETITION TO MAKE SPECIAL FOR NEW APPLICATION UNDER 37 C.F.R. § 1.102 & M.P.E.P. § 708.02

This is a decision on the renewed petition filed on June 13, 2011 to make the above-identified application special for accelerated examination procedure under 37 C.F.R. § 1.102(d).

The petition to make the application special is GRANTED.

The application is eligible for accelerated examination and the petition complies with the conditions for granting the application special status pursuant to the "Change to Practice for Petitions in Patent Applications to Make Special and for Accelerated Examination" published June 26, 2006, in the Federal Register. (71 Fed. Reg. 36323).

The prosecution of the instant application will be conducted expeditiously according to the following guidelines.

1. The application will be docketed to an examiner and taken up for action within two weeks of the date of this decision.

2. Restriction Practice:
   If the examiner determines that the claims are not directed to a single invention, a telephone request to elect one single invention will be made pursuant to MPEP 812.01. As a prerequisite to the grant of this petition, the applicant has agreed to make an oral election, by telephone, without traverse. If the applicant refuses to make an election without traverse, or the examiner cannot reach the applicant after a reasonable effort, the examiner will treat the first claimed invention (invention defined by claim 1) as having being constructively elected without traverse for examination.

3. Office action:
   If it is determined that, after appropriate consultation, there is a potential rejection or any other issue to be addressed, the examiner will telephone the applicant and arrange an interview to discuss and resolve the issue. An Office action, other than a Notice of Allowance and Fee(s) Due (Notice of Allowance), will not be issued unless either: 1) an interview was conducted but did not result in agreed to action that places the application in condition for allowance, or, 2) a determination is made that an interview would be unlikely to result in the application being placed in condition for allowance, and 3) an internal conference has been held to review any rejection of any claim.

4. Time for Reply:
   An Office action other than a Notice of Allowance or a final Office action will set a shortened statutory period of one month or thirty days, whichever is longer, for reply with no extension of time available under 37 CFR 1.136(a). Failure to timely file a reply within this non-extendible period for reply will result in the abandonment of the application.

5. Reply by Applicant:
   A timely reply to an Office action other than the Notice of Allowance must be submitted electronically via EFS or EFS-web and limited to addressing the rejections, objections and requirement made. Any amendment that attempts to: 1) add claims which would result in more than three pending independent claims or more than twenty pending total claims; 2) present claims not encompassed by the pre-examination search or an updated accelerated examination support document; or 3) present claims that are directed a non-elected invention or an invention other than that previously claimed and examined in the application, will be treated as not fully responsive and will not be entered.

   For any amendment to the claims (including any new claim) that is not encompassed by the accelerated examination support document, applicant must provide an updated accelerated examination support document that encompasses the amended or new claims at the time of filing of the amendment.

   To proceed expeditiously with the examination, it is recommended that a reply with amendments made to any claim or with any new claim being added be accompanied by an updated accelerated examination support document or a statement explaining how the amended or new claim is supported by the original accelerated examination support document.

6. Information Disclosure Statement (IDS):
   Any IDS filed during prosecution must be submitted electronically via EFS or EFS-web, accompanied by an updated accelerated examination support document, and be in compliance with 37 CFR 1.97 and 1.98.

7. Post-Allowance Processing:
   To expedite processing of the allowed application into a patent, the applicant must: 1) pay the required fees within one month of the date of the Notice of Allowance, and 2) not file any post allowance papers not required by the Office. In no event may the issue fee be paid and accepted later than three months from the date of the Notice of Allowance.

8. After-Final and Appeal Procedures:
   To expedite prosecution, after receiving the final Office action, applicant must: 1) promptly file a notice of appeal, an appeal brief and appeal fees; and 2) not request a pre-appeal brief conference.

   Any amendment, affidavit or other evidence filed after final Office action must comply with applicable rules and the requirements outlined in numbered paragraphs 5 and 6 above.

   On appeal, the application will proceed according to normal appeal procedures. After appeal, the application will again be treated special.

9. Proceedings Outside the Normal Examination Process:
   If the application becomes involved in a proceeding that is outside the normal examination process (e.g., a secrecy order, national security review, interference proceeding, petitions under 37 CFR 1.181, 182 or 183), the application will be treated special before and after such proceeding.

10. Final Disposition:
    The twelve month goal of this accelerated examination procedure ends with a final disposition. The mailing of a final Office action, a Notice of Allowance, the filing of a Notice of Appeal, or the filing of a Request for Continued Examination (RCE) is the final disposition.

If, during prosecution, a paper is not filed electronically using EFS-web, a reply is filed but is not fully responsive, the application is involved in an appeal, or a proceeding outside normal examination process, the application will still be examined expeditiously, however, the final disposition may occur more than twelve months from the filing of the application.

Any inquiry regarding this decision should be directed to Linda Sholl at (571) 272-4391

/Linda Sholl/
Linda Sholl
Special Programs Examiner
Technology Center 3700

UNITED STATES PATENT AND TRADEMARK OFFICE

Commissioner for Patents
United States Patent and Trademark Office
P.O. Box 1450
Alexandria, VA 22313-1450
www.uspto.gov

MATHEWS, SHEPHERD, MCKAY, & BRUNEAU, P.A.
29 THANET ROAD, SUITE 201
PRINCETON NJ 08540

MAILED

JUN 10 2011

OFFICE OF PETITIONS

In re Application of	:	
DeCarvalho Cal et al.	:	
Application No. 13/025672	:	
Filing or 371(c) Date: 00/00/0000	:	
Attorney Docket Number:	:	DECISION
5824-103 US	:	ON PETITION

This is a decision on the "Response to Notice of Incomplete Nonprovisional Application," filed May 2, 2011. The response is properly treated as a petition under §1.57(a).

The petition is **dismissed**.

Background

Application papers in the above-identified application were deposited on February 11, 2011. However, on February 28, 2011, the Office of Patent Application Processing mailed applicants a "Notice of Incomplete Nonprovisional Application," notifying applicants that the application papers had NOT been accorded a filing date because the specification was missing. The Notice also required replacement drawings. In response, applicants timely filed this petition. Applicant submits a copy of the inadvertently omitted specification and provide that the specification is identical to the English translation of Brazilian Patent Application No. PI-1001193-5 filed with the application papers on February 11, 2011, and petitions to add the inadvertently omitted specification.

Applicable Law, Rules and MPEP

Petition under 37 CFR 1.57(a)

37 CFR § 1.57, Incorporation by reference, states:

> (a) Subject to the conditions and requirements of this paragraph, if all or a portion of the specification or drawing(s) is inadvertently omitted from an application, but the application contains a claim under § 1.55 for priority of a prior-filed foreign application, or a claim under § 1.78 for the benefit of a prior-filed provisional, nonprovisional, or international application, that was present on the filing date of the application, and the inadvertently omitted portion of the specification or

drawing(s) is completely contained in the prior-filed application, the claim under § 1.55 or § 1.78 shall also be considered an incorporation by reference of the prior-filed application as to the inadvertently omitted portion of the specification or drawing(s).

(1) The application must be amended to include the inadvertently omitted portion of the specification or drawing(s) within any time period set by the Office, but in no case later than the close of prosecution as defined by § 1.114(b), or abandonment of the application, whichever occurs earlier. The applicant is also required to:

(i) Supply a copy of the prior-filed application, except where the prior-filed application is an application filed under 35 U.S.C. 111;

(ii) Supply an English language translation of any prior-filed application that is in a language other than English; and

(iii) Identify where the inadvertently omitted portion of the specification or drawings can be found in the prior-filed application.

Analysis

Applicants have filed a copy of the inadvertently omitted specification and provide that the specification is identical to the English translation of Brazilian Patent Application No. PI-1001193-5 filed with the application papers on February 11, 2011; however, the applicable rule requires an Amendment to the application. Applicants have failed to include an Amendment to the application to include the inadvertently omitted portion of the specification as required by 37 CFR 1.57(a)(1).

Conclusion

The petition is dismissed without prejudice. Applicants must file an Amendment to the application to include the inadvertently omitted specification.

Telephone inquiries concerning this matter should be directed to Attorney Derek Woods at (571) 272-3232.

Christopher Bottorff
Petitions Examiner
Office of Petitions

UNITED STATES PATENT AND TRADEMARK OFFICE

Commissioner for Patents
United States Patent and Trademark Office
P.O. Box 1450
Alexandria, VA 22313-1450
www.uspto.gov

MATHEWS, SHEPHERD, MCKAY, & BRUNEAU, P.A.
29 THANET ROAD, SUITE 201
PRINCETON NJ 08540

MAILED
JUL 21 2011
OFFICE OF PETITIONS

In re Application of	:	
De Carvalho Cal et al.	:	
Application No. 13/025672	:	
Filing or 371(c) Date: 02/11/2011	:	
Attorney Docket Number:	:	DECISION
5824-103 US	:	ON PETITION

This is a decision on the Amendment, filed July 14, 2011, in response to a Decision dismissing a petition to add inadvertently omitted material filed under 37 CFR §1.57(a). The Amendment is properly treated as a request for reconsideration of the petition under 37 CFR §1.57(a).

The petition is **granted to the extent indicated below**.

Background

Application papers in the above-identified application were deposited on February 11, 2011. However, on February 28, 2011, the Office of Patent Application Processing mailed applicants a "Notice of Incomplete Nonprovisional Application," notifying applicants that the application papers had NOT been accorded a filing date because the specification was missing. The Notice also required replacement drawings. In response, applicants timely filed this petition. Applicant submitted a copy of the inadvertently omitted specification and provided that the specification is identical to the English translation of Brazilian Patent Application No. PI-1001193-5 filed with the application papers on February 11, 2011, and petitioned to add the inadvertently omitted specification. However, Applicant had failed to Amend the application to include the inadvertently omitted specification.

The petition was dismissed in a Decision mailed June 10, 2011. The Decision dismissing the petition required an Amendment to the application to include the inadvertently omitted specification in accordance with 37 CFR 1.57(a).

The present renewed petition

Applicant files the present renewed petition and an Amendment to add the inadvertently omitted specification in accordance with 37 CFR 1.57(a).

Applicable Law, Rules and MPEP

Petition under 37 CFR 1.57(a)

37 CFR § 1.57, Incorporation by reference, states:

> (a) Subject to the conditions and requirements of this paragraph, if all or a portion of the specification or drawing(s) is inadvertently omitted from an application, but the application contains a claim under § 1.55 for priority of a prior-filed foreign application, or a claim under § 1.78 for the benefit of a prior-filed provisional, nonprovisional, or international application, that was present on the filing date of the application, and the inadvertently omitted portion of the specification or drawing(s) is completely contained in the prior-filed application, the claim under § 1.55 or § 1.78 shall also be considered an incorporation by reference of the prior-filed application as to the inadvertently omitted portion of the specification or drawing(s).

Priority claim under 37 CFR 1.78

A petition for acceptance of a claim for late priority under 37 CFR 1.78(a)(3) is only applicable to those applications filed on or after November 29, 2000. Further, the petition is appropriate only after the expiration of the period specified in 37 CFR 1.78(a)(2)(ii). In addition, the petition under 37 CFR 1.78(a)(3) must be accompanied by:

(1) the reference required by 35 U.S.C. § 120 and 37 CFR 1.78(a)(2)(i) of the prior-filed application, unless previously submitted;
(2) the surcharge set forth in § 1.17(t); and
(3) a statement that the entire delay between the date the claim was due under 37 CFR 1.78(a)(2)(ii) and the date the claim was filed was unintentional. The Director may require additional information where there is a question whether the delay was unintentional.

Analysis

Applicant has included a proper priority claim to Brazilian Patent Application PI-1001193-5, filed February 11, 2011, in the Oath/Declaration filed on February 11, 2011. Therefore, based upon applicant's incorporation by reference of the contents of the Brazilian Patent Application on filing of the present application, a filing date of February 11, 2011, may be accorded the

present application. Applicant has filed a preliminary amendment to add the inadvertently omitted material with the present renewed petition on February 11, 2011, in accordance with 37 CFR 1.57(a).

Conclusion

This application is being referred to the Office of Patent Application Processing for further processing, with the filing date of February 11, 2011, using the application papers present on that date.

Telephone inquiries concerning this matter should be directed to Attorney Derek Woods at (571) 272-3232.

Christopher Bottorff
Petitions Examiner
Office of Petitions

Doc Code: PET.AUTO **Document Description: Petition automatically granted by EFS-Web**	PTO/SB/83 U.S. Patent and Trademark Office Department of Commerce

Electronic Petition Request	**REQUEST FOR WITHDRAWAL AS ATTORNEY OR AGENT AND CHANGE OF CORRESPONDENCE ADDRESS**
Application Number	13025677
Filing Date	11-Feb-2011
First Named Inventor	Walter Presz
Art Unit	3745
Examiner Name	
Attorney Docket Number	FDWT 200050US01
Title	FLUID TURBINE

◉ Please withdraw me as attorney or agent for the above identified patent application and the practitioners of record associated with Customer Number: 27885

The reason(s) for this request are those described in 37 CFR:

10.40(c)(5)

Certifications

☒ I/We have given reasonable notice to the client, prior to the expiration of the response period, that the practitioner(s) intend to withdraw from employment

☒ I/We have delivered to the client or a duly authorized representative of the client all papers and property (including funds) to which the client is entitled

☒ I/We have notified the client of any responses that may be due and the time frame within which the client must respond

Change the correspondence address and direct all future correspondence to the first named inventor or assignee that has properly made itself of record pursuant to 37 CFR 3.71:

Name	FloDesign Wind Turbine Corp.
Address	380 Main Street
City	Wilbraham
State	MA
Postal Code	01095
Country	US

I am authorized to sign on behalf of myself and all withdrawing practitioners.	
Signature	/ Richard M. Klein /
Name	Richard M. Klein
Registration Number	33000

UNITED STATES PATENT AND TRADEMARK OFFICE

Commissioner for Patents
United States Patent and Trademark Office
P.O. Box 1450
Alexandria, VA 22313-1450
www.uspto.gov

Decision Date : September 16,2011

In re Application of :

Walter Presz

Application No : 13025677

Filed : 11-Feb-2011

Attorney Docket No : FDWT 200050US01

DECISION ON REQUEST TO WITHDRAW AS ATTORNEY/AGENTOF RECORD

This is an electronic decision on the Request to Withdraw as attorney or agent of record under 37 CFR § 1.36(b), filed September 16,2011

The request is **APPROVED.**

The request was signed by Richard M. Klein (registration no. 33000) on behalf of all attorneys/agents associated with Customer Number 27885 . All attorneys/agents associated with Cusotmer Number 27885 have been withdrawn.

Since there are no remaining attorneys of record, all future communications from the Office will be directed to the first named inventor or assignee that has properly made itself of record pursuant to 37 CFR 3.71, with correspondence address:

Name	FloDesign Wind Turbine Corp.
Name2	
Address 1	380 Main Street
Address 2	
City	Wilbraham
State	MA
Postal Code	01095
Country	US

As a reminder, requester is required to inform the first named inventor or assignee that has properly made itself of record pursuant to 37 CFR 3.71 of the electronically processed petition.

Telephone inquiries concerning this decision should be directed to the Patent Electronic Business Center (EBC) at 866-217-9197.

Office of Petitions

UNITED STATES PATENT AND TRADEMARK OFFICE

UNITED STATES DEPARTMENT OF COMMERCE
United States Patent and Trademark Office
Address: COMMISSIONER FOR PATENTS
P.O. Box 1450
Alexandria, Virginia 22313-1450
www.uspto.gov

APPLICATION NO.	FILING DATE	FIRST NAMED INVENTOR	ATTORNEY DOCKET NO.	CONFIRMATION NO.
13/025,686	02/11/2011	Simone Monika Ritter	99866-50	3205

20311 7590 04/15/2011
LUCAS & MERCANTI, LLP
475 PARK AVENUE SOUTH
15TH FLOOR
NEW YORK, NY 10016

EXAMINER	
ART UNIT	PAPER NUMBER
1767	

NOTIFICATION DATE	DELIVERY MODE
04/15/2011	ELECTRONIC

Please find below and/or attached an Office communication concerning this application or proceeding.

The time period for reply, if any, is set in the attached communication.

Notice of the Office communication was sent electronically on above-indicated "Notification Date" to the following e-mail address(es):

info@lmiplaw.com

UNITED STATES PATENT AND TRADEMARK OFFICE

Commissioner for Patents
United States Patent and Trademark Office
P.O. Box 1450
Alexandria, VA 22313-1450
www.uspto.gov

APR 15 2011

CST

In re application of Simone Monika Ritter et al Serial No. 13/025,686 Filed: February 11, 2011 For: X-RAY OPAQUE BARIUM-FREE GLASSES AND USES THEREOF	: : : : : :	DECISION ON REQUEST TO PARTICIPATE IN PATENT PROSECUTION HIGHWAY PROGRAM AND PETITION TO MAKE SPECIAL UNDER 37 CFR 1.102(a)

This is a decision on the request to participate in the Patent Prosecution Highway (PPH) program filed February 11, 2011.

The request and petition are **GRANTED**.

A grantable request to participate in the PPH program and petition to make special require:

(1) The U.S. application must validly claim priority under 35 U.S.C. 119(a) to one or more applications filed in the DPMA, note where the DPMA application with similar claims is not the same application from which the U.S. application claims priority that the applicant must identify the relationship between the DPMA application with similar claims and the DPMA priority application;

(2) Applicant must submit a copy of:
   a. The allowable/patentable claim(s) from the DPMA application(s) or if a copy of the allowable/patentable claims is available via the Dossier Access System (DAS) applicant may request the USPTO to obtain a copy from DAS; however, if the USPTO is unable to obtain a copy from the DAS, the applicant will be required to submit a copy;
   b. An English translation of the allowable/ patentable claim(s), if applicable; and
   c. A statement that the English translation is accurate, if applicable;

(3) Applicant must:
   a. Ensure all the claims in the U.S. application must sufficiently correspond or be amended to sufficiently correspond to the allowable/patentable claim(s) in the DPMA application(s); and
   b. Submit a claims correspondence table in English;

(4) Examination of the U.S. application has not begun;

(5) Applicant must submit:
   a. Documentation of prior office action:
      a copy of the office action(s) from each of the DPMA application(s) containing the allowable/patentable claims(s);
   b. An English language translation of the DPMA Office action; and
   c. A statement that the English translation is accurate; and

(6) Applicant must submit:
   a. An IDS listing the documents cited by the DPMA examiner in the DPMA office action (unless already submitted in this application)
   b. Copies of documents except U.S. patents or U.S. patent application publications (unless already submitted in this application).

The request to participate in the PPH program and petition comply with the above requirements. Accordingly, the above-identified application has been accorded "special" status.

The application is currently undergoing preexamination processing, and will be forwarded to the examiner for action on the merits upon completion of the processing.

Any inquiry regarding this decision should be directed to Christine Tierney, Quality Assurance Specialist, at (571) 272-1055.

All other inquiries concerning the examination or status of the application is accessible in the PAIR system at http://www.uspto.gov/ebc/index.html.

/Christine Tierney/

Christine Tierney
Quality Assurance Specialist
Technology Center 1700

Doc Code: PET.GREEN
Document Description: Petition for Green Tech Pilot

PTO/SB/420 (11-10)
Approved for use through 01/31/2011. OMB 0651-0062
U.S. Patent and Trademark Office; U. S. DEPARTMENT OF COMMERCE
Under the Paperwork Reduction Act of 1995, no persons are required to respond to a collection of information unless it displays a valid OMB control number.

PETITION TO MAKE SPECIAL UNDER THE GREEN TECHNOLOGY PILOT PROGRAM

Attorney Docket Number: PAT 6303-2	Application Number (if known): 13/025,696	Filing date: February 11, 2010
First Named Inventor: Norbert PUETZ		
Title: SOLAR CELL ASSEMBLY WITH SOLDER LUG		

APPLICANT HEREBY REQUESTS TO PARTICIPATE IN THE GREEN TECHNOLOGY PILOT PROGRAM FOR THE ABOVE-IDENTIFIED APPLICATION. See Instruction Sheet on page 2.

This petition must be timely filed electronically using the USPTO electronic filing system, EFS-Web.

1. By filing this petition:

   Applicant is requesting early publication: Applicant hereby requests early publication under 37 CFR 1.219 and the publication fee set forth in 37 CFR 1.18(d) accompanies this request.

2. By filing this petition: applicant is agreeing to make an election without traverse in a telephonic interview and elect an invention that meets the eligibility requirements for the Green Technology Pilot Program, if the Office determines that the claims are not obviously directed to a single invention. See Instruction Sheet.

3. This request is accompanied by statements of special status for the eligibility requirement.

4. The application contains no more than three (3) independent claims and twenty (20) total claims.

5. The application does not contain any multiple dependent claims.

6. Other attachments: _____

Signature /Louis B. Allard/	Date April 21, 2011
Name (Print/Typed) Louis B. Allard	Registration Number 64,014

Note: *Signatures of all the inventors or assignees of record of the entire interest or their representative(s) are required in accordance with 37 CFR 1.33 and 11.18. Please see 37 CFR 1.4(d) for the form of the signature. If necessary, submit multiple forms for more than one signature, see below*.*

*Total of ..... forms are submitted.

The information is required to obtain or retain a benefit by the public which is to file (and by the USPTO to process) an application. Confidentiality is governed by 35 U.S.C. 122 and 37 CFR 1.11 and 1.14. This collection is estimated to take 12 hours to complete, including gathering, preparing, and submitting the completed application form to the USPTO. Time will vary depending upon the individual case. Any comments on the amount of time you require to complete this form and/or suggestions for reducing this burden, should be sent to the Chief Information Officer, U.S. Patent and Trademark Office, U.S. Department of Commerce, P.O. Box 1450, Alexandria, VA 22313-1450. DO NOT SEND FEES OR COMPLETED FORMS TO THIS ADDRESS. **SEND TO: Commissioner for Patents, P.O. Box 1450, Alexandria, VA 22313-1450.**

If you need assistance in completing the form, call 1-800-PTO-9199 and select option 2.

Under the Paperwork Reduction Act of 1995, no persons are required to respond to a collection of information unless it displays a valid OMB control number.

Instruction Sheet for Petition to Make Special Under the Green Technology Pilot Program

(Not to be Submitted to the USPTO)

The following is a summary of the requirements (for more information see the notices (i) "Pilot Program for Green Technologies Including Greenhouse Gas Reduction," (ii) "Elimination of Classification Requirement in the Green Technology Pilot Program," and (iii) "Expansion and Extension of the Green Technology Pilot Program," available on the USPTO web site at http://www.uspto.gov/patents/init_events/green_tech.jsp):

1) The application must be a non-reissue, non-provisional utility application filed under 35 U.S.C. 111 (a), or an international application that has entered the national stage in compliance with 35 U.S.C. 371, irrespective of the filing date of the application. Reexamination proceedings are excluded from this pilot program.

2) The application must contain three or fewer independent claims and twenty or fewer total claims. The application must not contain any multiple dependent claims. For an application that contains more than three independent claims or twenty total claims, or multiple dependent claims, applicant must file a preliminary amendment in compliance with 37 CFR 1.121 to cancel the excess claims and/or the multiple dependent claims at the time the petition to make special is filed.

3) The claims must be directed to a single invention that materially enhances the quality of the environment, or that materially contributes to: (1) the discovery or development of renewable energy resources; (2) the more efficient utilization and conservation of energy resources; or (3) green house gas emission reduction (see the eligibility requirements of sections II and III of the notice (i) cited above). The petition must include a statement that, if the USPTO determines that the claims are directed to multiple inventions (e.g., in a restriction requirement), applicant will agree to make an election without traverse in a telephonic interview, and elect an invention that meets the eligibility requirements in section II or III of the notice (i) cited above.

4) The petition to make special must be timely filed electronically using the USPTO electronic filing system, EFS-Web, and selecting the document description of "Petition for Green Tech Pilot" on the EFS-Web screen. Applicant should use form PTO/SB/420, which is available as a Portable Document Format (PDF) fillable form in EFS-Web and on the USPTO Web site.

5) The petition to make special must be filed at least one day prior to the date that a first Office action (which may be an Office action containing only a restriction requirement) appears in the Patent Application Information Retrieval (PAIR) system. Applicant may check the status of the application using PAIR.

6) The petition to make special must be accompanied by a request for early publication in compliance with 37 CFR 1.219 and the publication fee set forth in 37 CFR 1.18(d).

Privacy Act Statement

The **Privacy Act of 1974 (P.L. 93-579)** requires that you be given certain information in connection with your submission of the attached form related to a patent application or patent. Accordingly, pursuant to the requirements of the Act, please be advised that: (1) the general authority for the collection of this information is 35 U.S.C. 2(b)(2); (2) furnishing of the information solicited is voluntary; and (3) the principal purpose for which the information is used by the U.S. Patent and Trademark Office is to process and/or examine your submission related to a patent application or patent. If you do not furnish the requested information, the U.S. Patent and Trademark Office may not be able to process and/or examine your submission, which may result in termination of proceedings or abandonment of the application or expiration of the patent.

The information provided by you in this form will be subject to the following routine uses:

1. The information on this form will be treated confidentially to the extent allowed under the Freedom of Information Act (5 U.S.C. 552) and the Privacy Act (5 U.S.C 552a). Records from this system of records may be disclosed to the Department of Justice to determine whether disclosure of these records is required by the Freedom of Information Act.
2. A record from this system of records may be disclosed, as a routine use, in the course of presenting evidence to a court, magistrate, or administrative tribunal, including disclosures to opposing counsel in the course of settlement negotiations.
3. A record in this system of records may be disclosed, as a routine use, to a Member of Congress submitting a request involving an individual, to whom the record pertains, when the individual has requested assistance from the Member with respect to the subject matter of the record.
4. A record in this system of records may be disclosed, as a routine use, to a contractor of the Agency having need for the information in order to perform a contract. Recipients of information shall be required to comply with the requirements of the Privacy Act of 1974, as amended, pursuant to 5 U.S.C. 552a(m).
5. A record related to an International Application filed under the Patent Cooperation Treaty in this system of records may be disclosed, as a routine use, to the International Bureau of the World Intellectual Property Organization, pursuant to the Patent Cooperation Treaty.
6. A record in this system of records may be disclosed, as a routine use, to another federal agency for purposes of National Security review (35 U.S.C. 181) and for review pursuant to the Atomic Energy Act (42 U.S.C. 218(c)).
7. A record from this system of records may be disclosed, as a routine use, to the Administrator, General Services, or his/her designee, during an inspection of records conducted by GSA as part of that agency's responsibility to recommend improvements in records management practices and programs, under authority of 44 U.S.C. 2904 and 2906. Such disclosure shall be made in accordance with the GSA regulations governing inspection of records for this purpose, and any other relevant (*i.e.*, GSA or Commerce) directive. Such disclosure shall not be used to make determinations about individuals.
8. A record from this system of records may be disclosed, as a routine use, to the public after either publication of the application pursuant to 35 U.S.C. 122(b) or issuance of a patent pursuant to 35 U.S.C. 151. Further, a record may be disclosed, subject to the limitations of 37 CFR 1.14, as a routine use, to the public if the record was filed in an application which became abandoned or in which the proceedings were terminated and which application is referenced by either a published application, an application open to public inspection or an issued patent.
9. A record from this system of records may be disclosed, as a routine use, to a Federal, State, or local law enforcement agency, if the USPTO becomes aware of a violation or potential violation of law or regulation.

UNITED STATES PATENT AND TRADEMARK OFFICE

UNITED STATES DEPARTMENT OF COMMERCE
United States Patent and Trademark Office
Address: COMMISSIONER FOR PATENTS
P.O. Box 1450
Alexandria, Virginia 22313-1450
www.uspto.gov

APPLICATION NO.	FILING DATE	FIRST NAMED INVENTOR	ATTORNEY DOCKET NO.	CONFIRMATION NO.
13/025,696	02/11/2011	Norbert PUETZ	PAT 6303-2	3227

26123 7590 05/26/2011
BORDEN LADNER GERVAIS LLP
Anne Kinsman
WORLD EXCHANGE PLAZA
100 QUEEN STREET SUITE 1100
OTTAWA, ON K1P 1J9
CANADA

EXAMINER

ART UNIT	PAPER NUMBER
1725	

NOTIFICATION DATE	DELIVERY MODE
05/26/2011	ELECTRONIC

Please find below and/or attached an Office communication concerning this application or proceeding.

The time period for reply, if any, is set in the attached communication.

Notice of the Office communication was sent electronically on above-indicated "Notification Date" to the following e-mail address(es):

ipinfo@blg.com

UNITED STATES PATENT AND TRADEMARK OFFICE

Commissioner for Patents
United States Patent and Trademark Office
P.O. Box 1450
Alexandria, VA 22313-1450
www.uspto.gov

5/26/11

BORDEN LADNER GERVAIS LLP
Anne Kinsman
WORLD EXCHANGE PLAZA
100 QUEEN STREET SUITE 1100
OTTAWA ON K1P 1J9 CA CANADA

In re Application of	:	
Puetz et al.	:	DECISION ON PETITION
Application No. 13/025,696	:	TO MAKE SPECIAL UNDER
Filed: 2/11/2011	:	THE GREEN TECHNOLOGY
Attorney Docket No. **PAT 6303-2**	:	PILOT PROGRAM

This is a decision on the petition under 37 CFR 1.102, filed 4/21/2011, to make the above-identified application special under the pilot program for applications pertaining to Green Technologies as set forth in 74 Federal Register Notice 64666 (December 8, 2009) and amended by 75 Federal Register Notice 28554 (May 21, 2010) and 75 Federal Register Notice 69049 (November 10, 2010).

The petition is **GRANTED**.

A grantable petition to make an application special under 37 CFR 1.102 and the pilot program as set forth in 74 FR 64666 must be directed to a nonprovisional application filed under 35 USC 111(a) or be a national stage entry under 35 USC 371, exclusive of any reissue applications.

In order to qualify for special status, the following requirements must be met. 1) The application must have no more than 3 independent claims and no more than 20 total claims. 2) The application must not contain any multiple dependent claims. 3) The petition must state the basis for seeking special status, i.e., the claimed invention either: A) materially enhances the quality of the environment or B) materially contributes to: i) the discovery or development of renewable energy resources, ii) the more efficient utilization and conservation of energy resources, or iii) greenhouse gas emission reduction. 4) If the disclosure is not clear on its face that the claimed invention materially contributes under category (A) or (B), the petition must be accompanied by a statement by the applicant, assignee, or an attorney/agent registered to practice before the Office explaining how the materiality standard is met. 5) A statement that applicant will agree to make an election without traverse in a telephonic interview if a restriction requirement is made by the examiner. 6) The petition to make special must be filed electronically. 7) The petition must be filed at least one day prior to the date that a first Office Action appears in the Patent Application Information Retrieval (PAIR) system. 8) The petition must be accompanied by a

request for early publication in compliance with 37 CFR 1.219 and include the publication fee as set forth in 37 CFR 1.18(d).

The requirement for a fee for consideration of the petition to make special for applications pertaining to Green Technologies has been waived.

The instant petition complies with items 1 – 8 above. Accordingly, the above-identified application has been accorded "special" status.

Telephone inquires concerning this decision should be directed to Tom Dunn at 571-272-1171.

The application is being forwarded to the Technology Center Art Unit 1725 for action on the merits commensurate with this decision.

/Tom Dunn/

Tom Dunn
Quality Assurance Specialist
Technology Center 1700

UNITED STATES PATENT AND TRADEMARK OFFICE

Commissioner for Patents
United States Patent and Trademark Office
P.O. Box 1450
Alexandria, VA 22313-1450
www.uspto.gov

MAILED
JUN 06 2011
OFFICE OF PETITIONS

BINGHAM MCCUTCHEN LLP
2020 K Street, N.W.
Intellectual Property Department
WASHINGTON DC 20006

In re Application of	:	
Hansson et al.	:	
Application No. 13/025,702	:	ON PETITION
Deposited: February 11, 2011	:	
Attorney Docket No. 7060795002	:	

This is in response to the "PETITION UNDER 37 C.F.R. 1.57 (a)" filed April 28, 2011, requesting that the above-referenced application be accorded a filing date of February 11, 2011. This petition is being treated pursuant to 37 CFR 1.53(e)(2)[1].

Application papers in the above-identified application were deposited on February 11, 2011. However, on February 28, 2011, the Office of Patent Application Processing mailed applicants a "Notice of Incomplete Nonprovisional Application," notifying applicants that the application papers had not been accorded a filing date because the application was deposited without drawings. In response, applicants timely filed this petition. Applicants request that the application be amended to include the inadvertently omitted drawings on the basis that the application as filed contained a prior benefit claim under 37 CFR 1.55 or 1.78.

Petitioner's arguments and evidence have been considered. However, a review of the application confirms that, as filed, the application contained at least one method claim. MPEP 601.01(f) provides that:

> It has been USPTO practice to treat an application that contains at least one process or method claim as an application for which a drawing is not necessary for an understanding of the invention under 35 U.S.C. 113 (first sentence).

Thus, pursuant to § 601.01(f), a drawing is not considered essential for a filing date. The instant application is entitled to a filing date without drawings present in the application.

Accordingly, the Office should have granted the application a filing date and mailed a Notice of Omitted Items instead of a Notice of Incomplete Nonprovisional Application. As stated in MPEP 601.01(g) under the section entitled, "Application Entitled to a Filing Date," applicant may submit an amendment to include the inadvertently omitted portion of the drawing(s) pursuant to 37 CFR 1.57(a):

---

[1] Any request for review of a notification pursuant to paragraph (e)(1) of this section, or a notification that the original application papers lack a portion of the specification or drawing(s), must be by way of a petition pursuant to this paragraph accompanied by the fee set forth in § 1.17(f). In the absence of a timely (§ 1.181(f)) petition pursuant to this paragraph, the filing date of an application in which the applicant was notified of a filing error pursuant to paragraph (e)(1) of this section will be the date the filing error is corrected.

> [i]f an application was filed on or after September 21, 2004, and contains a claim under 37 CFR 1.55 for priority of a prior-filed foreign application, or a claim under 37 CFR 1.78 for the benefit of a prior-filed provisional, nonprovisional, or international application that was present on the filing date of the application, and the omitted portion of the drawing(s) was inadvertently omitted from the application and is completely contained in the prior-filed application[.]

Please note that no petition is required and that the amendment must comply with 37 CFR 1.57(a) and 37 CFR 1.121. See MPEP § 201.17. Any amendment to include the inadvertently omitted drawing(s) will be considered by the examiner.

To the extent the instant petition requests a filing date of February 11, 2011 with no drawings present in the application, the petition is **GRANTED**.

Given the basis for granting this petition, the petition fee is being refunded.

Pursuant to this decision, the application will be referred to Office of Patent Application Processing for:

- **correction of the filing date to February 11, 2011**;
- **for indication in Office records, as appropriate, that "0" sheets of drawings were present on filing** and
- **for issuance of a filing receipt.**

Telephone inquiries concerning this matter may be directed to the undersigned at (571) 272-3215.

Charlema Grant
Attorney
Office of Petitions

PETITION TO MAKE SPECIAL UNDER THE GREEN TECHNOLOGY PILOT PROGRAM

Attorney Docket Number: 027364-013700US	Application Number (if known): 13/025,791	Filing date: February 11, 2011
First Named Inventor: Shum, Frank Tin Chung		
Title: ILLUMINATION SOURCE WITH DIRECT DIE PLACEMENT		

APPLICANT HEREBY REQUESTS TO PARTICIPATE IN THE GREEN TECHNOLOGY PILOT PROGRAM FOR THE ABOVE-IDENTIFIED APPLICATION. See Instruction Sheet on page 2.

This petition must be timely filed electronically using the USPTO electronic filing system, EFS-Web.

1. By filing this petition:

   Applicant is requesting early publication: Applicant hereby requests early publication under 37 CFR 1.219 and the publication fee set forth in 37 CFR 1.18(d) accompanies this request.

2. By filing this petition: applicant is agreeing to make an election without traverse in a telephonic interview and elect an invention that meets the eligibility requirements for the Green Technology Pilot Program, if the Office determines that the claims are not obviously directed to a single invention. See Instruction Sheet.

3. This request is accompanied by statements of special status for the eligibility requirement.

4. The application contains no more than three (3) independent claims and twenty (20) total claims.

5. The application does not contain any multiple dependent claims.

6. Other attachments:_____

Signature /Robert C. Colwell/	Date February 16, 2011
Name (Print/Typed) Robert C. Colwell	Registration Number 27,431

Note: *Signatures of all the inventors or assignees of record of the entire interest or their representative(s) are required in accordance with 37 CFR 1.33 and 11.18. Please see 37 CFR 1.4(d) for the form of the signature. If necessary, submit multiple forms for more than one signature, see below*.*

☐ *Total of_____forms are submitted.

Instruction Sheet for
Petition to Make Special Under the Green Technology Pilot Program

(Not to be Submitted to the USPTO)

The following is a summary of the requirements (for more information see notices (i) "Pilot Program for Green Technologies Including Greenhouse Gas Reduction," (ii) "Elimination of Classification Requirement in the Green Technology Pilot Program," and (iii) Expansion and Extension of the Green Technology Pilot Program," available on the USPTO web site at http:// www.uspto.gov/patents/init_events/green_tech.jsp):

1) The application must be a non-reissue, non-provisional utility application filed under 35 U.S.C. 111 (a), or an international application that has entered the national stage in compliance with 35 U.S.C. 371, irrespective of the filing date of the application. Reexamination proceedings are excluded from this pilot program.

2) The application must contain three or fewer independent claims and twenty or fewer total claims. The application must not contain any multiple dependent claims. For an application that contains more than three independent claims or twenty total claims, or multiple dependent claims, applicant must file a preliminary amendment in compliance with 37 CFR 1.121 to cancel the excess claims and/or the multiple dependent claims at the time the petition to make special is filed.

3) The claims must be directed to a single invention that materially enhances the quality of the environment, or that materially contributes to: (1) the discovery or development of renewable energy resources; (2) the more efficient utilization and conservation of energy resources; or (3) green house gas emission reduction (see the eligibility requirements of sections II and III of the notice (i) cited above). The petition must include a statement that, if the USPTO determines that the claims are directed to multiple inventions (e.g., in a restriction requirement), applicant will agree to make an election without traverse in a telephonic interview, and elect an invention that meets the eligibility requirements in section II or III of the notice (i) cited above.

4) The petition to make special must be timely filed electronically using the USPTO electronic filing system, EFS-Web, and selecting the document description of "Petition for Green Tech Pilot" on the EFS-Web screen. Applicant should use form PTO/SB/420, which is available as a Portable Document Format (PDF) fillable form in EFS-Web and on the USPTO Web site.

5) The petition to make special must be filed at least one day prior to the date that a first Office action (which may be an Office action containing only a restriction requirement) appears in the Patent Application Information Retrieval (PAIR) system. Applicant may check the status of the application using PAIR.

6) The petition to make special must be accompanied by a request for early publication in compliance with 37 CFR 1.219 and the publication fee set forth in 37 CFR 1.18(d).

PATENT
Docket No.: 027364-013700US

IN THE UNITED STATES PATENT AND TRADEMARK OFFICE

In re application of:	Confirmation No.: 3440
Frank Tin Chung Shum et al.	Examiner: Unknown
Application No.: 13/025,791	Art Unit: Unknown
Filed: February 11, 2011	
For: ILLUMINATION SOURCE WITH DIRECT DIE PLACEMENT	PETITION TO MAKE SPECIAL UNDER THE GREEN TECHNOLOGY PILOT PROGRAM
Customer No.: 20350	

Commissioner for Patents
P.O. Box 1450
Alexandria, VA 22313-1450

Commissioner:

Applicant hereby requests to participate in the Green Technology Pilot Program for the above-identified application.

Applicant further requests early publication under 37 CFR1.219 and the publication fee set forth in 37 CFR 1.18(d) accompanies this request. The Commissioner is hereby authorized to charge Deposit Account No. 20-1430 for the amount of $300.

By filing this petition, Applicant is agreeing to make an election without traverse in a telephonic interview and elect an invention that meets the eligibility requirement and the classification requirement set forth in the Federal Register notice entitled "Pilot Program for Green Technologies Including Greenhouse Gas Reduction" that was published in the Federal Register if the Office determines that the claims are not obviously directed to a single invention.

STATEMENT OF SPECIAL STATUS FOR THE ELIGIBILITY REQUIREMENT

The basis for the special status is that the invention claimed in the above-identified patent application materially contributes to the development of more efficient

utilization and conservation of energy resources. The present invention is related to light-emitting diodes devices, which can be used for various types of lighting applications. Light-emitting diodes promise fundamentally higher efficiencies than traditional lighting technologies such as incandescent and mercury-based fluorescent lamps. Lighting accounts for about 20% of nationwide electricity use. Switching older lighting technologies to high efficiency LED lighting could reduce this electricity consumption in half. That is, an overall 10% reduction in nationwide electricity use. This is a savings of 1100 Terra-Watt-hours/year in energy consumption (or ~ $100B/year energy costs) and a 200M tons/year reduction in global carbon emissions annually. In addition, it could save 125 GW/year in electricity generation requirements ($50B construction cost or more). This invention contributes directly to LED lighting because the claimed invention is directed to a structure for an LED light.

The application does not contain any multiple dependent claims.

Respectfully submitted,

/Robert C. Colwell/

Robert C. Colwell
Reg. No. 27,431

KILPATRICK TOWNSEND & STOCKTON LLP
Two Embarcadero Center, Eighth Floor
San Francisco, California 94111-3834
Tel: (415) 576-0200
Fax: (415) 576-0300
RCC:mks
63161823 v1

UNITED STATES PATENT AND TRADEMARK OFFICE

UNITED STATES DEPARTMENT OF COMMERCE
United States Patent and Trademark Office
Address: COMMISSIONER FOR PATENTS
P.O. Box 1450
Alexandria, Virginia 22313-1450
www.uspto.gov

APPLICATION NO.	FILING DATE	FIRST NAMED INVENTOR	ATTORNEY DOCKET NO.	CONFIRMATION NO.
13/025,791	02/11/2011	Frank Tin Chung Shum	027364-013700US	3440

20350 7590 05/26/2011
KILPATRICK TOWNSEND & STOCKTON LLP
TWO EMBARCADERO CENTER
EIGHTH FLOOR
SAN FRANCISCO, CA 94111-3834

EXAMINER

ART UNIT	PAPER NUMBER
2875	

NOTIFICATION DATE	DELIVERY MODE
05/26/2011	ELECTRONIC

Please find below and/or attached an Office communication concerning this application or proceeding.

The time period for reply, if any, is set in the attached communication.

Notice of the Office communication was sent electronically on above-indicated "Notification Date" to the following e-mail address(es):

Docket@kilpatricktownsend.com
ipefiling@kilpatricktownsend.com
jlhice@kilpatrick.foundationip.com

UNITED STATES PATENT AND TRADEMARK OFFICE

Commissioner for Patents
United States Patent and Trademark Office
P.O. Box 1450
Alexandria, VA 22313-1450
www.uspto.gov

KILPATRICK TOWNSEND & STOCKTON LLP
TWO EMBARCADERO CENTER
EIGHTH FLOOR
SAN FRANCISCO CA 94111-3834

In re Application of	:	
SHUM et al.	:	DECISION ON PETITION
Application No. 13/025,791	:	TO MAKE SPECIAL UNDER
Filed: February 11, 2011	:	THE GREEN TECHNOLOGY
Attorney Docket No. 027364-013700US	:	PILOT PROGRAM

This is a decision on the petition under 37 CFR 1.102, filed on February 17, 2011, to make the above-identified application special under the pilot program for applications pertaining to Green Technologies as set forth 74 Federal Register Notice 64666 (December 8, 2009) and amended by 75 Federal Register Notice 28554 (May 21, 2010) and 75 Federal Register Notice 69049 (November 10, 2010).

The petition is **GRANTED**.

A grantable petition to make an application special under 37 CFR 1.102 and the pilot program as set forth in 74 FR 64666 must be directed to a nonprovisional application filed under 35 USC 111(a) or be a national stage entry under 35 USC 371, exclusive of any reissue applications.

In order to qualify for special status, the following requirements must be met. 1) The application must have no more than 3 independent claims and no more than 20 total claims. 2) The application must not contain any multiple dependent claims. 3) The petition must state the basis for seeking special status, i.e., the claimed invention either: A) materially enhances the quality of the environment or B) materially contributes to: i) the discovery or development of renewable energy resources, ii) the more efficient utilization and conservation of energy resources, or iii) greenhouse gas emission reduction. 4) If the disclosure is not clear on its face that the claimed invention materially contributes under category (A) or (B), the petition must be accompanied by a statement by the applicant, assignee, or an attorney/agent registered to practice before the Office explaining how the materiality standard is met. 5) A statement that applicant will agree to make an election without traverse in a telephonic interview if a restriction requirement is made by the examiner. 6) The petition to make special must be filed electronically. 7) The petition must be filed at least one day prior to the date that a first Office Action appears in the Patent Application Information Retrieval (PAIR) system. 8) The petition must be accompanied by a request for early publication in compliance with 37 CFR 1.219 and include the publication fee as set forth in 37 CFR 1.18(d).

The requirement for a fee for consideration of the petition to make special for applications pertaining to Green Technologies has been waived.

The instant petition complies with items 1 – 8 above. Accordingly, the above-identified application has been accorded "special" status.

Telephone inquires concerning this decision should be directed to Lee W. Young at 571-272-4549.

The application is being forwarded to the Technology Center Art Unit 2875 for action on the merits commensurate with this decision.

Lee W. Young
Quality Assurance Specialist
Technology Center 2800

UNITED STATES PATENT AND TRADEMARK OFFICE

Commissioner for Patents
United States Patent and Trademark Office
P.O. Box 1450
Alexandria, VA 22313-1450
www.uspto.gov

IDEATION LAW
2750 RIVERSIDE AVENUE
JACKSONVILLE, FL 32205

MAILED
DEC 23 2011
OFFICE OF PETITIONS

In re Application of	:	
William D. Meadow, et al.	:	
Application No. 13/025,819	:	DECISION ON PETITION
Filed: February 11, 2011	:	
Attorney Docket No. RDC.0002DIV1	:	

This is a decision on the petition under the unintentional provisions of 37 CFR 1.137(b), filed November 17, 2011, to revive the above-identified application.

There is no indication that the person signing the instant petition was ever given a power of attorney or authorization of agent to prosecute the above-identified application. In accordance with 37 CFR 1.34(a), the signature appearing on the petition shall constitute a representation to the United States Patent and Trademark Office that he/she is authorized to represent the particular party in whose behalf he/she acts. However, if petitioner desires to receive future correspondence regarding this application, the appropriate power of attorney or authorization of agent must be submitted. A courtesy copy of this decision is being mailed to petitioner. Nevertheless, all future correspondence regarding this application file will be directed solely to the address of record until otherwise instructed.

The application became abandoned for failure to reply in a timely manner to the Notice to File Missing Parts of Non-provisional Application (Notice), mailed February 25, 2011. The Notice set a period for reply of two (2) months from the mail date of the Notice. No extensions of time under the provisions of 37 CFR 1.136(a) were obtained. Accordingly, the application became abandoned on April 26, 2011.

The petition satisfies the requirements of 37 CFR 1.137(b) in that petitioner has supplied (1) the reply in the form of a reply, (2) the petition fee of $930, and (3) a proper statement of unintentional delay.

In view of the above, the petition is **GRANTED**.

Telephone inquiries concerning this decision should be directed to undersigned at (571) 272-1642. All other inquiries concerning the examination or status of this application should be directed to the Office of Patent Application Processing at their hotline 571-272-4000.

This application is being referred back to the Office of Patent Application Processing for pre-examination processing of the reply received November 17, 2011.

April M. Wise
Petitions Examiner
Office of Petitions

PETITION TO MAKE SPECIAL UNDER THE GREEN TECHNOLOGY PILOT PROGRAM

Attorney Docket Number: 027364-013800US	Application Number (if known): 13/025,833	Filing date: February 11, 2011

First Named Inventor: Shum, Frank Tin Chung

Title: ILLUMINATION SOURCE WITH REDUCED INNER CORE SIZE

APPLICANT HEREBY REQUESTS TO PARTICIPATE IN THE GREEN TECHNOLOGY PILOT PROGRAM FOR THE ABOVE-IDENTIFIED APPLICATION. See Instruction Sheet on page 2.

This petition must be timely filed electronically using the USPTO electronic filing system, EFS-Web.

1. By filing this petition:

   Applicant is requesting early publication: Applicant hereby requests early publication under 37 CFR 1.219 and the publication fee set forth in 37 CFR 1.18(d) accompanies this request.

2. By filing this petition: applicant is agreeing to make an election without traverse in a telephonic interview and elect an invention that meets the eligibility requirements for the Green Technology Pilot Program, if the Office determines that the claims are not obviously directed to a single invention. See Instruction Sheet.

3. This request is accompanied by statements of special status for the eligibility requirement.

4. The application contains no more than three (3) independent claims and twenty (20) total claims.

5. The application does not contain any multiple dependent claims.

6. Other attachments:_____

Signature /Robert C. Colwell/	Date February 16, 2011
Name (Print/Typed) Robert C. Colwell	Registration Number 27,431

Note: *Signatures of all the inventors or assignees of record of the entire interest or their representative(s) are required in accordance with 37 CFR 1.33 and 11.18. Please see 37 CFR 1.4(d) for the form of the signature. If necessary, submit multiple forms for more than one signature, see below*.*

☐ *Total of_____forms are submitted.

Instruction Sheet for
Petition to Make Special Under the Green Technology Pilot Program

(Not to be Submitted to the USPTO)

The following is a summary of the requirements (for more information see notices (i) "Pilot Program for Green Technologies Including Greenhouse Gas Reduction," (ii) "Elimination of Classification Requirement in the Green Technology Pilot Program," and (iii) Expansion and Extension of the Green Technology Pilot Program," available on the USPTO web site at http:// www.uspto.gov/patents/init_events/green_tech.jsp):

1) The application must be a non-reissue, non-provisional utility application filed under 35 U.S.C. 111 (a), or an international application that has entered the national stage in compliance with 35 U.S.C. 371, irrespective of the filing date of the application. Reexamination proceedings are excluded from this pilot program.

2) The application must contain three or fewer independent claims and twenty or fewer total claims. The application must not contain any multiple dependent claims. For an application that contains more than three independent claims or twenty total claims, or multiple dependent claims, applicant must file a preliminary amendment in compliance with 37 CFR 1.121 to cancel the excess claims and/or the multiple dependent claims at the time the petition to make special is filed.

3) The claims must be directed to a single invention that materially enhances the quality of the environment, or that materially contributes to: (1) the discovery or development of renewable energy resources; (2) the more efficient utilization and conservation of energy resources; or (3) green house gas emission reduction (see the eligibility requirements of sections II and III of the notice (i) cited above). The petition must include a statement that, if the USPTO determines that the claims are directed to multiple inventions (e.g., in a restriction requirement), applicant will agree to make an election without traverse in a telephonic interview, and elect an invention that meets the eligibility requirements in section II or III of the notice (i) cited above.

4) The petition to make special must be timely filed electronically using the USPTO electronic filing system, EFS-Web, and selecting the document description of "Petition for Green Tech Pilot" on the EFS-Web screen. Applicant should use form PTO/SB/420, which is available as a Portable Document Format (PDF) fillable form in EFS-Web and on the USPTO Web site.

5) The petition to make special must be filed at least one day prior to the date that a first Office action (which may be an Office action containing only a restriction requirement) appears in the Patent Application Information Retrieval (PAIR) system. Applicant may check the status of the application using PAIR.

6) The petition to make special must be accompanied by a request for early publication in compliance with 37 CFR 1.219 and the publication fee set forth in 37 CFR 1.18(d).

PATENT
Docket No.: 027364-013800US

IN THE UNITED STATES PATENT AND TRADEMARK OFFICE

In re application of:	Confirmation No.: 3529
Frank Tin Chung Shum et al.	Examiner: Unknown
Application No.: 13/025,833	Art Unit: Unknown
Filed: February 11, 2011	
For: ILLUMINATION SOURCE WITH REDUCED INNER CORE SIZE	PETITION TO MAKE SPECIAL UNDER THE GREEN TECHNOLOGY PILOT PROGRAM
Customer No.: 20350	

Commissioner for Patents
P.O. Box 1450
Alexandria, VA 22313-1450

Commissioner:

Applicant hereby requests to participate in the Green Technology Pilot Program for the above-identified application.

Applicant further requests early publication under 37 CFR1.219 and the publication fee set forth in 37 CFR 1.18(d) accompanies this request. The Commissioner is hereby authorized to charge Deposit Account No. 20-1430 for the amount of $300.

By filing this petition, Applicant is agreeing to make an election without traverse in a telephonic interview and elect an invention that meets the eligibility requirement and the classification requirement set forth in the Federal Register notice entitled "Pilot Program for Green Technologies Including Greenhouse Gas Reduction" that was published in the Federal Register if the Office determines that the claims are not obviously directed to a single invention.

STATEMENT OF SPECIAL STATUS FOR THE ELIGIBILITY REQUIREMENT

The basis for the special status is that the invention claimed in the above-identified patent application materially contributes to the development of more efficient

utilization and conservation of energy resources. The present invention is related to light-emitting diodes devices, which can be used for various types of lighting applications. Light-emitting diodes promise fundamentally higher efficiencies than traditional lighting technologies such as incandescent and mercury-based fluorescent lamps. Lighting accounts for about 20% of nationwide electricity use. Switching older lighting technologies to high efficiency LED lighting could reduce this electricity consumption in half. That is, an overall 10% reduction in nationwide electricity use. This is a savings of 1100 Terra-Watt-hours/year in energy consumption (or ~ $100B/year energy costs) and a 200M tons/year reduction in global carbon emissions annually. In addition, it could save 125 GW/year in electricity generation requirements ($50B construction cost or more). This invention contributes directly to LED lighting, as the claimed invention is directed to an LED light having an industry standard MR-16 form factor.

The application does not contain any multiple dependent claims.

Respectfully submitted,

/Robert C. Colwell/

Robert C. Colwell
Reg. No. 27,431

KILPATRICK TOWNSEND & STOCKTON LLP
Two Embarcadero Center, Eighth Floor
San Francisco, California 94111-3834
Tel: (415) 576-0200
Fax: (415) 576-0300
RCC:mks
63161848 v1

UNITED STATES PATENT AND TRADEMARK OFFICE

UNITED STATES DEPARTMENT OF COMMERCE
United States Patent and Trademark Office
Address: COMMISSIONER FOR PATENTS
P.O. Box 1450
Alexandria, Virginia 22313-1450
www.uspto.gov

APPLICATION NO.	FILING DATE	FIRST NAMED INVENTOR	ATTORNEY DOCKET NO.	CONFIRMATION NO.
13/025,833	02/11/2011	Frank Tin Chung Shum	91756-798778	3529

20350 7590 05/26/2011
KILPATRICK TOWNSEND & STOCKTON LLP
TWO EMBARCADERO CENTER
EIGHTH FLOOR
SAN FRANCISCO, CA 94111-3834

EXAMINER

ART UNIT	PAPER NUMBER
2875	

NOTIFICATION DATE	DELIVERY MODE
05/26/2011	ELECTRONIC

Please find below and/or attached an Office communication concerning this application or proceeding.

The time period for reply, if any, is set in the attached communication.

Notice of the Office communication was sent electronically on above-indicated "Notification Date" to the following e-mail address(es):

Docket@kilpatricktownsend.com
ipefiling@kilpatricktownsend.com
jlhice@kilpatrick.foundationip.com

UNITED STATES PATENT AND TRADEMARK OFFICE

Commissioner for Patents
United States Patent and Trademark Office
P.O. Box 1450
Alexandria, VA 22313-1450
www.uspto.gov

KILPATRICK TOWNSEND & STOCKTON LLP
TWO EMBARCADERO CENTER
EIGHTH FLOOR
SAN FRANCISCO CA 94111-3834

In re Application of	:	
SHUM et al.	:	DECISION ON PETITION
Application No. 13/025,833	:	TO MAKE SPECIAL UNDER
Filed: February 11, 2011	:	THE GREEN TECHNOLOGY
Attorney Docket No. 91756-798778	:	PILOT PROGRAM

This is a decision on the petition under 37 CFR 1.102, filed on February 17, 2011, to make the above-identified application special under the pilot program for applications pertaining to Green Technologies as set forth 74 Federal Register Notice 64666 (December 8, 2009) and amended by 75 Federal Register Notice 28554 (May 21, 2010) and 75 Federal Register Notice 69049 (November 10, 2010).

The petition is **GRANTED**.

A grantable petition to make an application special under 37 CFR 1.102 and the pilot program as set forth in 74 FR 64666 must be directed to a nonprovisional application filed under 35 USC 111(a) or be a national stage entry under 35 USC 371, exclusive of any reissue applications.

In order to qualify for special status, the following requirements must be met. 1) The application must have no more than 3 independent claims and no more than 20 total claims. 2) The application must not contain any multiple dependent claims. 3) The petition must state the basis for seeking special status, i.e., the claimed invention either: A) materially enhances the quality of the environment or B) materially contributes to: i) the discovery or development of renewable energy resources, ii) the more efficient utilization and conservation of energy resources, or iii) greenhouse gas emission reduction. 4) If the disclosure is not clear on its face that the claimed invention materially contributes under category (A) or (B), the petition must be accompanied by a statement by the applicant, assignee, or an attorney/agent registered to practice before the Office explaining how the materiality standard is met. 5) A statement that applicant will agree to make an election without traverse in a telephonic interview if a restriction requirement is made by the examiner. 6) The petition to make special must be filed electronically. 7) The petition must be filed at least one day prior to the date that a first Office Action appears in the Patent Application Information Retrieval (PAIR) system. 8) The petition must be accompanied by a request for early publication in compliance with 37 CFR 1.219 and include the publication fee as set forth in 37 CFR 1.18(d).

The requirement for a fee for consideration of the petition to make special for applications pertaining to Green Technologies has been waived.

The instant petition complies with items 1 – 8 above. Accordingly, the above-identified application has been accorded "special" status.

Telephone inquires concerning this decision should be directed to Lee W. Young at 571-272-4549.

The application is being forwarded to the Technology Center Art Unit 2875 for action on the merits commensurate with this decision.

Lee W. Young
Quality Assurance Specialist
Technology Center 2800

PETITION TO MAKE SPECIAL UNDER THE GREEN TECHNOLOGY PILOT PROGRAM

Attorney Docket Number: 027364-013900US	Application Number (if known): 13/025,849	Filing date: February 11, 2011

First Named Inventor: Shum, Frank Tin Chung

Title: ILLUMINATION SOURCE AND MANUFACTURING METHODS

APPLICANT HEREBY REQUESTS TO PARTICIPATE IN THE GREEN TECHNOLOGY PILOT PROGRAM FOR THE ABOVE-IDENTIFIED APPLICATION. See Instruction Sheet on page 2.

This petition must be timely filed electronically using the USPTO electronic filing system, EFS-Web.

1. By filing this petition:

   Applicant is requesting early publication: Applicant hereby requests early publication under 37 CFR 1.219 and the publication fee set forth in 37 CFR 1.18(d) accompanies this request.

2. By filing this petition: applicant is agreeing to make an election without traverse in a telephonic interview and elect an invention that meets the eligibility requirements for the Green Technology Pilot Program, if the Office determines that the claims are not obviously directed to a single invention. See Instruction Sheet.

3. This request is accompanied by statements of special status for the eligibility requirement.

4. The application contains no more than three (3) independent claims and twenty (20) total claims.

5. The application does not contain any multiple dependent claims.

6. Other attachments:_____

Signature /Robert C. Colwell/	Date February 16, 2011
Name (Print/Typed) Robert C. Colwell	Registration Number 27,431

Note: *Signatures of all the inventors or assignees of record of the entire interest or their representative(s) are required in accordance with 37 CFR 1.33 and 11.18. Please see 37 CFR 1.4(d) for the form of the signature. If necessary, submit multiple forms for more than one signature, see below*.*

☐ *Total of_____forms are submitted.

Instruction Sheet for
Petition to Make Special Under the Green Technology Pilot Program

(Not to be Submitted to the USPTO)

The following is a summary of the requirements (for more information see notices (i) "Pilot Program for Green Technologies Including Greenhouse Gas Reduction," (ii) "Elimination of Classification Requirement in the Green Technology Pilot Program," and (iii) Expansion and Extension of the Green Technology Pilot Program," available on the USPTO web site at http:// www.uspto.gov/patents/init_events/green_tech.jsp):

1) The application must be a non-reissue, non-provisional utility application filed under 35 U.S.C. 111 (a), or an international application that has entered the national stage in compliance with 35 U.S.C. 371, irrespective of the filing date of the application. Reexamination proceedings are excluded from this pilot program.

2) The application must contain three or fewer independent claims and twenty or fewer total claims. The application must not contain any multiple dependent claims. For an application that contains more than three independent claims or twenty total claims, or multiple dependent claims, applicant must file a preliminary amendment in compliance with 37 CFR 1.121 to cancel the excess claims and/or the multiple dependent claims at the time the petition to make special is filed.

3) The claims must be directed to a single invention that materially enhances the quality of the environment, or that materially contributes to: (1) the discovery or development of renewable energy resources; (2) the more efficient utilization and conservation of energy resources; or (3) green house gas emission reduction (see the eligibility requirements of sections II and III of the notice (i) cited above). The petition must include a statement that, if the USPTO determines that the claims are directed to multiple inventions (e.g., in a restriction requirement), applicant will agree to make an election without traverse in a telephonic interview, and elect an invention that meets the eligibility requirements in section II or III of the notice (i) cited above.

4) The petition to make special must be timely filed electronically using the USPTO electronic filing system, EFS-Web, and selecting the document description of "Petition for Green Tech Pilot" on the EFS-Web screen. Applicant should use form PTO/SB/420, which is available as a Portable Document Format (PDF) fillable form in EFS-Web and on the USPTO Web site.

5) The petition to make special must be filed at least one day prior to the date that a first Office action (which may be an Office action containing only a restriction requirement) appears in the Patent Application Information Retrieval (PAIR) system. Applicant may check the status of the application using PAIR.

6) The petition to make special must be accompanied by a request for early publication in compliance with 37 CFR 1.219 and the publication fee set forth in 37 CFR 1.18(d).

PATENT
Docket No.: 027364-013900US

IN THE UNITED STATES PATENT AND TRADEMARK OFFICE

In re application of:	Confirmation No.: 3562
Frank Tin Chung Shum et al.	Examiner: Unknown
Application No.: 13/025,849	Art Unit: Unknown
Filed: February 11, 2011	
For: ILLUMINATION SOURCE AND MANUFACTURING METHODS	PETITION TO MAKE SPECIAL UNDER THE GREEN TECHNOLOGY PILOT PROGRAM
Customer No.: 20350	

Commissioner for Patents
P.O. Box 1450
Alexandria, VA 22313-1450

Commissioner:

Applicant hereby requests to participate in the Green Technology Pilot Program for the above-identified application.

Applicant further requests early publication under 37 CFR1.219 and the publication fee set forth in 37 CFR 1.18(d) accompanies this request. The Commissioner is hereby authorized to charge Deposit Account No. 20-1430 for the amount of $300.

By filing this petition, Applicant is agreeing to make an election without traverse in a telephonic interview and elect an invention that meets the eligibility requirement and the classification requirement set forth in the Federal Register notice entitled "Pilot Program for Green Technologies Including Greenhouse Gas Reduction" that was published in the Federal Register if the Office determines that the claims are not obviously directed to a single invention.

STATEMENT OF SPECIAL STATUS FOR THE ELIGIBILITY REQUIREMENT

The basis for the special status is that the invention claimed in the above-identified patent application materially contributes to the development of more efficient

utilization and conservation of energy resources. The present invention is related to light-emitting diodes devices, which can be used for various types of lighting applications. Light-emitting diodes promise fundamentally higher efficiencies than traditional lighting technologies such as incandescent and mercury-based fluorescent lamps. Lighting accounts for about 20% of nationwide electricity use. Switching older lighting technologies to high efficiency LED lighting could reduce this electricity consumption in half. That is, an overall 10% reduction in nationwide electricity use. This is a savings of 1100 Terra-Watt-hours/year in energy consumption (or ~ $100B/year energy costs) and a 200M tons/year reduction in global carbon emissions annually. In addition, it could save 125 GW/year in electricity generation requirements ($50B construction cost or more). This invention contributes directly to LED lighting, as the claimed invention is directed to a method of making an LED light.

The application does not contain any multiple dependent claims.

Respectfully submitted,

/Robert C. Colwell/

Robert C. Colwell
Reg. No. 27,431

KILPATRICK TOWNSEND & STOCKTON LLP
Two Embarcadero Center, Eighth Floor
San Francisco, California 94111-3834
Tel: (415) 576-0200
Fax: (415) 576-0300
RCC:mks
63161866 v1

UNITED STATES PATENT AND TRADEMARK OFFICE

UNITED STATES DEPARTMENT OF COMMERCE
United States Patent and Trademark Office
Address: COMMISSIONER FOR PATENTS
P.O. Box 1450
Alexandria, Virginia 22313-1450
www.uspto.gov

APPLICATION NO.	FILING DATE	FIRST NAMED INVENTOR	ATTORNEY DOCKET NO.	CONFIRMATION NO.
13/025,849	02/11/2011	Frank Tin Chung Shum	91756-798779	3562

20350 7590 05/26/2011
KILPATRICK TOWNSEND & STOCKTON LLP
TWO EMBARCADERO CENTER
EIGHTH FLOOR
SAN FRANCISCO, CA 94111-3834

EXAMINER

ART UNIT	PAPER NUMBER
2875	

NOTIFICATION DATE	DELIVERY MODE
05/26/2011	ELECTRONIC

Please find below and/or attached an Office communication concerning this application or proceeding.

The time period for reply, if any, is set in the attached communication.

Notice of the Office communication was sent electronically on above-indicated "Notification Date" to the following e-mail address(es):

Docket@kilpatricktownsend.com
ipefiling@kilpatricktownsend.com
jlhice@kilpatrick.foundationip.com

UNITED STATES PATENT AND TRADEMARK OFFICE

Commissioner for Patents
United States Patent and Trademark Office
P.O. Box 1450
Alexandria, VA 22313-1450
www.uspto.gov

KILPATRICK TOWNSEND & STOCKTON LLP
TWO EMBARCADERO CENTER
EIGHTH FLOOR
SAN FRANCISCO CA 94111-3834

In re Application of	:	
SHUM et al.	:	DECISION ON PETITION
Application No. 13/025,849	:	TO MAKE SPECIAL UNDER
Filed: February 11, 2011	:	THE GREEN TECHNOLOGY
Attorney Docket No. 91756-798779	:	PILOT PROGRAM

This is a decision on the petition under 37 CFR 1.102, filed on February 17, 2011, to make the above-identified application special under the pilot program for applications pertaining to Green Technologies as set forth 74 Federal Register Notice 64666 (December 8, 2009) and amended by 75 Federal Register Notice 28554 (May 21, 2010) and 75 Federal Register Notice 69049 (November 10, 2010).

The petition is **GRANTED**.

A grantable petition to make an application special under 37 CFR 1.102 and the pilot program as set forth in 74 FR 64666 must be directed to a nonprovisional application filed under 35 USC 111(a) or be a national stage entry under 35 USC 371, exclusive of any reissue applications.

In order to qualify for special status, the following requirements must be met. 1) The application must have no more than 3 independent claims and no more than 20 total claims. 2) The application must not contain any multiple dependent claims. 3) The petition must state the basis for seeking special status, i.e., the claimed invention either: A) materially enhances the quality of the environment or B) materially contributes to: i) the discovery or development of renewable energy resources, ii) the more efficient utilization and conservation of energy resources, or iii) greenhouse gas emission reduction. 4) If the disclosure is not clear on its face that the claimed invention materially contributes under category (A) or (B), the petition must be accompanied by a statement by the applicant, assignee, or an attorney/agent registered to practice before the Office explaining how the materiality standard is met. 5) A statement that applicant will agree to make an election without traverse in a telephonic interview if a restriction requirement is made by the examiner. 6) The petition to make special must be filed electronically. 7) The petition must be filed at least one day prior to the date that a first Office Action appears in the Patent Application Information Retrieval (PAIR) system. 8) The petition must be accompanied by a request for early publication in compliance with 37 CFR 1.219 and include the publication fee as set forth in 37 CFR 1.18(d).

The requirement for a fee for consideration of the petition to make special for applications pertaining to Green Technologies has been waived.

The instant petition complies with items 1 – 8 above. Accordingly, the above-identified application has been accorded "special" status.

Telephone inquires concerning this decision should be directed to Lee W. Young at 571-272-4549.

The application is being forwarded to the Technology Center Art Unit 2875 for action on the merits commensurate with this decision.

Lee W. Young
Quality Assurance Specialist
Technology Center 2800

PETITION TO MAKE SPECIAL UNDER THE GREEN TECHNOLOGY PILOT PROGRAM

Attorney Docket Number: 027364-014000US	Application Number (if known): 13/025,860	Filing date: February 11, 2011
First Named Inventor: Shum, Frank Tin Chung		
Title: MODULAR LED LAMP AND MANUFACTURING METHODS		

APPLICANT HEREBY REQUESTS TO PARTICIPATE IN THE GREEN TECHNOLOGY PILOT PROGRAM FOR THE ABOVE-IDENTIFIED APPLICATION. See Instruction Sheet on page 2.

This petition must be timely filed electronically using the USPTO electronic filing system, EFS-Web.

1. By filing this petition:

   Applicant is requesting early publication: Applicant hereby requests early publication under 37 CFR 1.219 and the publication fee set forth in 37 CFR 1.18(d) accompanies this request.

2. By filing this petition: applicant is agreeing to make an election without traverse in a telephonic interview and elect an invention that meets the eligibility requirements for the Green Technology Pilot Program, if the Office determines that the claims are not obviously directed to a single invention. See Instruction Sheet.

3. This request is accompanied by statements of special status for the eligibility requirement.

4. The application contains no more than three (3) independent claims and twenty (20) total claims.

5. The application does not contain any multiple dependent claims.

6. Other attachments:_____

Signature /Robert C. Colwell/	Date February 16, 2011
Name (Print/Typed) Robert C. Colwell	Registration Number 27,431

Note: *Signatures of all the inventors or assignees of record of the entire interest or their representative(s) are required in accordance with 37 CFR 1.33 and 11.18. Please see 37 CFR 1.4(d) for the form of the signature. If necessary, submit multiple forms for more than one signature, see below*.*

☐ *Total of_____forms are submitted.

Instruction Sheet for
Petition to Make Special Under the Green Technology Pilot Program

(Not to be Submitted to the USPTO)

The following is a summary of the requirements (for more information see notices (i) "Pilot Program for Green Technologies Including Greenhouse Gas Reduction," (ii) "Elimination of Classification Requirement in the Green Technology Pilot Program," and (iii) Expansion and Extension of the Green Technology Pilot Program," available on the USPTO web site at http:// www.uspto.gov/patents/init_events/green_tech.jsp):

1) The application must be a non-reissue, non-provisional utility application filed under 35 U.S.C. 111 (a), or an international application that has entered the national stage in compliance with 35 U.S.C. 371, irrespective of the filing date of the application. Reexamination proceedings are excluded from this pilot program.

2) The application must contain three or fewer independent claims and twenty or fewer total claims. The application must not contain any multiple dependent claims. For an application that contains more than three independent claims or twenty total claims, or multiple dependent claims, applicant must file a preliminary amendment in compliance with 37 CFR 1.121 to cancel the excess claims and/or the multiple dependent claims at the time the petition to make special is filed.

3) The claims must be directed to a single invention that materially enhances the quality of the environment, or that materially contributes to: (1) the discovery or development of renewable energy resources; (2) the more efficient utilization and conservation of energy resources; or (3) green house gas emission reduction (see the eligibility requirements of sections II and III of the notice (i) cited above). The petition must include a statement that, if the USPTO determines that the claims are directed to multiple inventions (e.g., in a restriction requirement), applicant will agree to make an election without traverse in a telephonic interview, and elect an invention that meets the eligibility requirements in section II or III of the notice (i) cited above.

4) The petition to make special must be timely filed electronically using the USPTO electronic filing system, EFS-Web, and selecting the document description of "Petition for Green Tech Pilot" on the EFS-Web screen. Applicant should use form PTO/SB/420, which is available as a Portable Document Format (PDF) fillable form in EFS-Web and on the USPTO Web site.

5) The petition to make special must be filed at least one day prior to the date that a first Office action (which may be an Office action containing only a restriction requirement) appears in the Patent Application Information Retrieval (PAIR) system. Applicant may check the status of the application using PAIR.

6) The petition to make special must be accompanied by a request for early publication in compliance with 37 CFR 1.219 and the publication fee set forth in 37 CFR 1.18(d).

PATENT
Docket No.: 027364-014000US

IN THE UNITED STATES PATENT AND TRADEMARK OFFICE

In re application of:	Confirmation No.: 3589
Frank Tin Chung Shum et al.	Examiner: Unknown
Application No.: 13/025,860	Art Unit: Unknown
Filed: February 11, 2011	
For: MODULAR LED LAMP AND MANUFACTURING METHODS	PETITION TO MAKE SPECIAL UNDER THE GREEN TECHNOLOGY PILOT PROGRAM
Customer No.: 20350	

Commissioner for Patents
P.O. Box 1450
Alexandria, VA 22313-1450

Commissioner:

Applicant hereby requests to participate in the Green Technology Pilot Program for the above-identified application.

Applicant further requests early publication under 37 CFR1.219 and the publication fee set forth in 37 CFR 1.18(d) accompanies this request. The Commissioner is hereby authorized to charge Deposit Account No. 20-1430 for the amount of $300.

By filing this petition, Applicant is agreeing to make an election without traverse in a telephonic interview and elect an invention that meets the eligibility requirement and the classification requirement set forth in the Federal Register notice entitled "Pilot Program for Green Technologies Including Greenhouse Gas Reduction" that was published in the Federal Register if the Office determines that the claims are not obviously directed to a single invention.

STATEMENT OF SPECIAL STATUS FOR THE ELIGIBILITY REQUIREMENT

The basis for the special status is that the invention claimed in the above-identified patent application materially contributes to the development of more efficient

utilization and conservation of energy resources. The present invention is related to light-emitting diodes devices, which can be used for various types of lighting applications. Light-emitting diodes promise fundamentally higher efficiencies than traditional lighting technologies such as incandescent and mercury-based fluorescent lamps. Lighting accounts for about 20% of nationwide electricity use. Switching older lighting technologies to high efficiency LED lighting could reduce this electricity consumption in half. That is, an overall 10% reduction in nationwide electricity use. This is a savings of 1100 Terra-Watt-hours/year in energy consumption (or ~ $100B/year energy costs) and a 200M tons/year reduction in global carbon emissions annually. In addition, it could save 125 GW/year in electricity generation requirements ($50B construction cost or more). This invention contributes directly to LED lighting, as the claimed invention is directed to a method of making an LED Light.

The application does not contain any multiple dependent claims.

Respectfully submitted,

/Robert C. Colwell/

Robert C. Colwell
Reg. No. 27,431

KILPATRICK TOWNSEND & STOCKTON LLP
Two Embarcadero Center, Eighth Floor
San Francisco, California 94111-3834
Tel: (415) 576-0200
Fax: (415) 576-0300
RCC:mks
63161878 v1

UNITED STATES PATENT AND TRADEMARK OFFICE

UNITED STATES DEPARTMENT OF COMMERCE
United States Patent and Trademark Office
Address: COMMISSIONER FOR PATENTS
P.O. Box 1450
Alexandria, Virginia 22313-1450
www.uspto.gov

APPLICATION NO.	FILING DATE	FIRST NAMED INVENTOR	ATTORNEY DOCKET NO.	CONFIRMATION NO.
13/025,860	02/11/2011	Frank Tin Chung Shum	91756-798780	3589

20350 7590 05/26/2011
KILPATRICK TOWNSEND & STOCKTON LLP
TWO EMBARCADERO CENTER
EIGHTH FLOOR
SAN FRANCISCO, CA 94111-3834

EXAMINER

ART UNIT	PAPER NUMBER
2875	

NOTIFICATION DATE	DELIVERY MODE
05/26/2011	ELECTRONIC

Please find below and/or attached an Office communication concerning this application or proceeding.

The time period for reply, if any, is set in the attached communication.

Notice of the Office communication was sent electronically on above-indicated "Notification Date" to the following e-mail address(es):

Docket@kilpatricktownsend.com
ipefiling@kilpatricktownsend.com
jlhice@kilpatrick.foundationip.com

UNITED STATES PATENT AND TRADEMARK OFFICE

Commissioner for Patents
United States Patent and Trademark Office
P.O. Box 1450
Alexandria, VA 22313-1450
www.uspto.gov

KILPATRICK TOWNSEND & STOCKTON LLP
TWO EMBARCADERO CENTER
EIGHTH FLOOR
SAN FRANCISCO CA 94111-3834

In re Application of	:	
SHUM et al.	:	DECISION ON PETITION
Application No. 13/025,860	:	TO MAKE SPECIAL UNDER
Filed: February 11, 2011	:	THE GREEN TECHNOLOGY
Attorney Docket No. 91756-798780	:	PILOT PROGRAM

This is a decision on the petition under 37 CFR 1.102, filed on February 17, 2011, to make the above-identified application special under the pilot program for applications pertaining to Green Technologies as set forth 74 Federal Register Notice 64666 (December 8, 2009) and amended by 75 Federal Register Notice 28554 (May 21, 2010) and 75 Federal Register Notice 69049 (November 10, 2010).

The petition is **GRANTED**.

A grantable petition to make an application special under 37 CFR 1.102 and the pilot program as set forth in 74 FR 64666 must be directed to a nonprovisional application filed under 35 USC 111(a) or be a national stage entry under 35 USC 371, exclusive of any reissue applications.

In order to qualify for special status, the following requirements must be met. 1) The application must have no more than 3 independent claims and no more than 20 total claims. 2) The application must not contain any multiple dependent claims. 3) The petition must state the basis for seeking special status, i.e., the claimed invention either: A) materially enhances the quality of the environment or B) materially contributes to: i) the discovery or development of renewable energy resources, ii) the more efficient utilization and conservation of energy resources, or iii) greenhouse gas emission reduction. 4) If the disclosure is not clear on its face that the claimed invention materially contributes under category (A) or (B), the petition must be accompanied by a statement by the applicant, assignee, or an attorney/agent registered to practice before the Office explaining how the materiality standard is met. 5) A statement that applicant will agree to make an election without traverse in a telephonic interview if a restriction requirement is made by the examiner. 6) The petition to make special must be filed electronically. 7) The petition must be filed at least one day prior to the date that a first Office Action appears in the Patent Application Information Retrieval (PAIR) system. 8) The petition must be accompanied by a request for early publication in compliance with 37 CFR 1.219 and include the publication fee as set forth in 37 CFR 1.18(d).

The requirement for a fee for consideration of the petition to make special for applications pertaining to Green Technologies has been waived.

The instant petition complies with items 1 – 8 above. Accordingly, the above-identified application has been accorded "special" status.

Telephone inquires concerning this decision should be directed to Lee W. Young at 571-272-4549.

The application is being forwarded to the Technology Center Art Unit 2875 for action on the merits commensurate with this decision.

Lee W. Young
Quality Assurance Specialist
Technology Center 2800

PTO/SB/20PCT-KR (06-10)
Approved for use through 01/31/2015. OMB 0651-0058
U.S. Patent and Trademark Office; U.S DEPARTMENT OF COMMERCE
Under the Paperwork Reduction Act of 1995, no persons are required to respond to a collection of information unless it displays a valid OMB control number.

REQUEST FOR PARTICIPATION IN THE PATENT COOPERATION TREATY – PATENT PROSECUTION HIGHWAY (PCT-PPH) PILOT PROGRAM BETWEEN THE KOREAN INTELLECTUAL PROPERTY OFFICE (KIPO) AND THE USPTO

Application No.:	13/025,968	First Named Inventor:	Jeffrey Alan Craig
Filing Date:	02/11/2011	Attorney Docket No.:	1322/399/2
Title of the Invention:	METHODS, SYSTEMS, AND COMPUTER READABLE MEDIA FOR INTER-DIAMETER-MESSAGE PROCESSOR ROUTING		

THIS REQUEST FOR PARTICIPATION IN THE PCT-PPH PILOT PROGRAM ALONG WITH THE REQUIRED DOCUMENTS MUST BE SUBMITTED VIA EFS-WEB. INFORMATION REGARDING EFS-WEB IS AVAILABLE AT HTTP://WWW.USPTO.GOV/EBC/EFS_HELP.HTML.

APPLICANT HEREBY REQUESTS PARTICIPATION IN THE PCT-PPH PILOT PROGRAM AND PETITIONS TO MAKE THE ABOVE-IDENTIFIED APPLICATION SPECIAL UNDER THE PCT-PPH PILOT PROGRAM.

The above-identified application is (1) a national stage entry of the corresponding PCT application, or (2) a national stage entry of another PCT application which claims priority to the corresponding PCT application, or (3) a national application that claims domestic/ foreign priority to the corresponding PCT application, or (4) a national application which forms the basis for the priority claim in the corresponding PCT application, or (5) a continuing application of a U.S. application that satisfies one of (1) to (4) above, or (6) a U.S. application that claims domestic benefit to a U.S. provisional application which forms the basis for the priority claim in the corresponding PCT application.

The corresponding PCT application number(s) is/are: PCT/US2011/024588

The international filing date of the corresponding PCT application(s) is/are: 02/11/2011

I. List of Required Documents:

a. **A copy of the latest international work product (WO/ISA, WO/IPEA, or IPER) in the above-identified corresponding PCT application(s)**

☑ is attached.

☐ is not attached because the document is already in the U.S. application.

b. **A copy of all claims which were indicated as having novelty, inventive step and industrial applicability in the above-identified corresponding PCT application(s)**

☑ is attached.

☐ is not attached because the document is already in the U.S. application.

c. **English translations of the documents in a. and b. above are attached (if the documents are not in the English language). A statement that the English translation is accurate is attached for the document in b. above.**

d. **(1) An information disclosure statement listing the documents cited in the international work products (ISR, WO/ISA, WO/IPEA, IPER) of the corresponding PCT application.**

☑ is attached.

☐ has already been filed in the above-identified U.S. application on _____

(2) Copies of all documents (except for U.S. patents or U.S. patent application publications)

☑ are attached.

☐ have already been filed in the above-identified U.S. application on _____

This collection of information is required by 35 U.S.C. 119, 37 CFR 1.55, and 37 CFR 1.102(d). The information is required to obtain or retain a benefit by the public, which is to file (and by the USPTO to process) an application. Confidentiality is governed by 35 U.S.C. 122 and 37 CFR 1.11 and 1.14. This collection is estimated to take 2 hours to complete, including gathering, preparing, and submitting the completed application form to the USPTO. Time will vary depending upon the individual case. Any comments on the amount of time you require to complete this form and/or suggestions for reducing this burden should be sent to the Chief Information Officer, U.S. Patent and Trademark Office, U.S. Department of Commerce, P.O. Box 1450, Alexandria, VA 22313-1450. DO NOT SEND FEES OR COMPLETED FORMS TO THIS ADDRESS.

Under the Paperwork Reduction Act of 1995, no persons are required to respond to a collection of information unless it displays a valid OMB control number.

REQUEST FOR PARTICIPATION IN THE PCT-PPH PILOT PROGRAM BETWEEN THE KIPO AND THE USPTO

(continued)

Application No.:	13/025,968	First Named Inventor:	Jeffrey Alan Craig

II. Claims Correspondence Table:

Claims in US Application	Patentable Claims in the corresponding PCT application	Explanation regarding the correspondence
1-22	1-22	Exactly the same.

III. All the claims in the US application sufficiently correspond to the patentable claims in the corresponding PCT application.

Signature /Gregory A. Hunt/	Date February 23, 2012
Name (Print/Typed) Gregory A. Hunt	Registration Number 41,085

Privacy Act Statement

The **Privacy Act of 1974 (P.L. 93-579)** requires that you be given certain information in connection with your submission of the attached form related to a patent application or patent. Accordingly, pursuant to the requirements of the Act, please be advised that: (1) the general authority for the collection of this information is 35 U.S.C. 2(b)(2); (2) furnishing of the information solicited is voluntary; and (3) the principal purpose for which the information is used by the U.S. Patent and Trademark Office is to process and/or examine your submission related to a patent application or patent. If you do not furnish the requested information, the U.S. Patent and Trademark Office may not be able to process and/or examine your submission, which may result in termination of proceedings or abandonment of the application or expiration of the patent.

The information provided by you in this form will be subject to the following routine uses:

1. The information on this form will be treated confidentially to the extent allowed under the Freedom of Information Act (5 U.S.C. 552) and the Privacy Act (5 U.S.C 552a). Records from this system of records may be disclosed to the Department of Justice to determine whether disclosure of these records is required by the Freedom of Information Act.
2. A record from this system of records may be disclosed, as a routine use, in the course of presenting evidence to a court, magistrate, or administrative tribunal, including disclosures to opposing counsel in the course of settlement negotiations.
3. A record in this system of records may be disclosed, as a routine use, to a Member of Congress submitting a request involving an individual, to whom the record pertains, when the individual has requested assistance from the Member with respect to the subject matter of the record.
4. A record in this system of records may be disclosed, as a routine use, to a contractor of the Agency having need for the information in order to perform a contract. Recipients of information shall be required to comply with the requirements of the Privacy Act of 1974, as amended, pursuant to 5 U.S.C. 552a(m).
5. A record related to an International Application filed under the Patent Cooperation Treaty in this system of records may be disclosed, as a routine use, to the International Bureau of the World Intellectual Property Organization, pursuant to the Patent Cooperation Treaty.
6. A record in this system of records may be disclosed, as a routine use, to another federal agency for purposes of National Security review (35 U.S.C. 181) and for review pursuant to the Atomic Energy Act (42 U.S.C. 218(c)).
7. A record from this system of records may be disclosed, as a routine use, to the Administrator, General Services, or his/her designee, during an inspection of records conducted by GSA as part of that agency's responsibility to recommend improvements in records management practices and programs, under authority of 44 U.S.C. 2904 and 2906. Such disclosure shall be made in accordance with the GSA regulations governing inspection of records for this purpose, and any other relevant (*i.e.*, GSA or Commerce) directive. Such disclosure shall not be used to make determinations about individuals.
8. A record from this system of records may be disclosed, as a routine use, to the public after either publication of the application pursuant to 35 U.S.C. 122(b) or issuance of a patent pursuant to 35 U.S.C. 151. Further, a record may be disclosed, subject to the limitations of 37 CFR 1.14, as a routine use, to the public if the record was filed in an application which became abandoned or in which the proceedings were terminated and which application is referenced by either a published application, an application open to public inspection or an issued patent.
9. A record from this system of records may be disclosed, as a routine use, to a Federal, State, or local law enforcement agency, if the USPTO becomes aware of a violation or potential violation of law or regulation.

Doc Code: PET.GREEN
Document Description: Petition for Green Tech Pilot

PTO/SB/420 (03-11)

PETITION TO MAKE SPECIAL UNDER THE GREEN TECHNOLOGY PILOT PROGRAM

Attorney Docket Number: 0316362-NP1	Application Number (if known): 13/025,987	Filing date: February 11, 2011

First Named Inventor: Allan J. Reifel et al.

Title: Condensing Gas Package Unit for Roof or Ground Installation, Collector and Condensate Drain Apparatus

APPLICANT HEREBY REQUESTS TO PARTICIPATE IN THE GREEN TECHNOLOGY PILOT PROGRAM FOR THE ABOVE-IDENTIFIED APPLICATION. See Instruction Sheet on page 2.

This petition must be timely filed electronically using the USPTO electronic filing system, EFS-Web.

1. By filing this petition:

   Applicant is requesting early publication: Applicant hereby requests early publication under 37 CFR 1.219 and the publication fee set forth in 37 CFR 1.18(d) accompanies this request.

2. By filing this petition: applicant is agreeing to make an election without traverse in a telephonic interview and elect an invention that meets the eligibility requirements for the Green Technology Pilot Program, if the Office determines that the claims are not obviously directed to a single invention. See Instruction Sheet.

3. This request is accompanied by statements of special status for the eligibility requirement.

4. The application contains no more than three (3) independent claims and twenty (20) total claims.

5. The application does not contain any multiple dependent claims.

6. Other attachments: Preliminary Amendment

Signature	Date February 11, 2011
Name (Print/Typed) Allan W. Watts	Registration Number 45,930

***Note**: Signatures of all the inventors or assignees of record of the entire interest or their representative(s) are required in accordance with 37 CFR 1.33 and 11.18. Please see 37 CFR 1.4(d) for the form of the signature. If necessary, submit multiple forms for more than one signature, see below*.*

☐ *Total of 1 forms are submitted.

If you need assistance in completing the form, call 1-800-PTO-9199 and select option 2.

IN THE UNITED STATES PATENT AND TRADEMARK OFFICE

In re Application of	Group Art Unit: 3744
Allan J. Reifel et al.	Examiner: TBD
Application No.: 13/025,987	Confirmation No.: 3884
Filed: February 11, 2011	

Title: Condensing Gas Package Unit for Roof or Ground Installation, Collector, and Condensate Drain Apparatus

STATEMENT OF SPECIAL STATUS FOR ELIGIBILITY INTO THE GREEN TECHNOLOGY PILOT PROGRAM

Commissioner for Patents
P.O. Box 1450
Alexandria, VA 22313-1450

Dear Sir:

This paper is being filed with form PTO/SB/420 prior to the issuance of a first Office Action in the above-identified matter in order to qualify for special status and accelerated examination under the Green Technology Pilot Program. This paper includes remarks explaining why this patent application qualifies for the Green Technology Pilot Program. A fee for early publication is being filed herewith. No other fee is believed to be due in conjunction with this paper, but if any fee is required for this paper, or if the above fee is missing or insufficient, please consider this to be a petition therefore and deduct any necessary fees from (or deposit any overpayment to) Deposit Account 02-4467.

REMARKS begin on page 2 of this paper.

REMARKS

This patent application qualifies for the Green Technology Pilot Program because the subject matter of this patent application pertains to environmental quality, energy conservation, and greenhouse gas emission reduction. Patent applications in any one of these areas qualify for this program, but this patent application pertains to all three. Specifically, the present invention helps to make practicable, at least in certain applications, condensing gas furnaces or gas package units. Condensing units are more efficient than prior non-condensing gas units because more energy is recovered from the products of combustion before those products of combustion are discarded. As a result, less fuel needs to be burned to provide the amount of heat that is needed. Consequently, this invention contributes to more efficient utilization and conservation of natural gas and propane (as examples) and at least proportionally reduces the emissions into the atmosphere of pollutants traditionally associated with the combustion of fossil fuels such as carbon monoxide, hydrocarbons, and oxides of nitrogen. In addition, since less natural gas or propane is burned, this invention at least proportionally contributes to the reduction of the emission of greenhouse gasses such as carbon dioxide and any unburned methane in comparison, for example, with prior gas furnace technology.

Condensing furnaces have previously been used to reduce consumption of fossil fuels (e.g., natural gas or propane) burned in furnaces to provide heating. Condensing gas furnaces, however, have typically been located indoors. In such installations, condensate was typically drained into a sewer in a conventional manner. Many buildings, however, are configured to have an HVAC unit installed on the roof of the building or on the ground outside the building. In the past, such applications have typically not permitted use of a condensing furnace because condensate from the furnace would freeze when local ambient temperatures were below freezing. Frozen condensate would interfere with continued operation of the unit, collect causing a hazard or nuisance, or a combination thereof, as examples.

A number of reasons exist to reduce consumption of fossil fuels. These reasons include, as examples, reducing fuel bills for the building owner, reducing greenhouse gas

(e.g., carbon dioxide) production, reducing emissions of traditional pollutants such as carbon monoxide, hydrocarbons, and oxides of nitrogen, reducing dependency on limited fossil fuel reserves, reducing dependency on foreign sources of fossil fuels, and reducing environmental damage and risk associated with extraction of fossil fuels. Since many buildings are configured for HVAC units that are located outdoors, conversion of outdoor gas package units to condensing gas package units has the potential to significantly reduce consumption of fossil fuels. Consequently, needs or potential for benefit exist for equipment, apparatuses, and methods that allow condensing gas furnaces to be installed and used outdoors. In particular, needs or potential for benefit exist for equipment, apparatuses, and methods that prevent problems that result from the freezing of condensate from condensing furnaces that are installed outdoors. Needs or potential for benefit exist for equipment, apparatuses, and methods that prevent frozen condensate from interfering with continued operation of the HVAC unit, from collecting, from causing a hazard or nuisance, or a combination thereof, as examples.

Furthermore, condensing gas furnaces, means and methods of disposing of condensate from gas furnaces, and devices that make such equipment and systems possible for outdoor installations are needed or would be beneficial that are sufficiently reliable, inexpensive, and easy to install and service so as to be practical in a mass-production context. Needs or potential for benefit or improvement exist for methods of manufacturing condensing gas package units, HVAC equipment and HVAC units having condensing furnaces, and systems and buildings having such devices. Other needs or potential for benefit or improvement may also be described in this patent application or known in the HVAC or fossil fuel industries. Room for improvement exists over the prior art in these and other areas that may be apparent to a person of ordinary skill in the art having studied this patent application.

Particular claims of this patent application concern an air conditioning unit packaged with a condensing gas heat exchanger that has certain improvements to facilitate proper disposal of condensate. Other claims are directed to a part (a collector) for such a unit also with certain improvements to facilitate proper disposal of condensate. Other claims are

directed to an apparatus for passing a tube (e.g., a condensate drain line) through a duct wall, for example, to facilitate use of such a unit and to dispose of condensate in an acceptable manner. All such claims help to make practicable, at least in certain applications, condensing gas furnaces or gas package units, and thereby, contribute to more efficient utilization and conservation of natural gas and propane, reduce the emissions of pollutants traditionally associated with the combustion of fossil fuels, and reduce the emission of greenhouse gasses, for example, in comparison with prior gas furnace technology. If any one of these benefits exist, all such claims qualify for the Green Technology Pilot Program.

The statements made herein and in the other documents filed for this patent application should not be construed as an admission or assertion that any claim of this patent application would have been obvious over any other claim or that any two claims are not patentably distinct or independent. Nor should the statements made or silence herein be construed as consent or acceptance of any statement made by any other party unless specifically stated as such herein.

Consideration and allowance of all pending claims is requested. Should the Examiner believe that a discussion would help to advance allowance of this patent application, the Examiner is invited to telephone the undersigned.

Respectfully submitted,

Date: 11/4/11

By

Allan W. Watts
U.S. Reg. No. 45,930
Bryan Cave LLP
One Renaissance Square
Two North Central Avenue,
Suite 2200
Phoenix, AZ 85004-4406
allan.watts@bryancave.com
Direct: 602-364-7331

UNITED STATES PATENT AND TRADEMARK OFFICE

UNITED STATES DEPARTMENT OF COMMERCE
United States Patent and Trademark Office
Address: COMMISSIONER FOR PATENTS
P.O. Box 1450
Alexandria, Virginia 22313-1450
www.uspto.gov

APPLICATION NO.	FILING DATE	FIRST NAMED INVENTOR	ATTORNEY DOCKET NO.	CONFIRMATION NO.
13/025,987	02/11/2011	Allan J. Reifel	0316362-NP1	3884

46019 7590 11/25/2011
BRYAN CAVE LLP
TWO NORTH CENTRAL AVENUE, SUITE 2200
PHOENIX, AZ 85004

EXAMINER

ART UNIT	PAPER NUMBER
3744	

MAIL DATE	DELIVERY MODE
11/25/2011	PAPER

Please find below and/or attached an Office communication concerning this application or proceeding.

The time period for reply, if any, is set in the attached communication.

UNITED STATES PATENT AND TRADEMARK OFFICE

Commissioner for Patents
United States Patent and Trademark Office
P.O. Box 1450
Alexandria, VA 22313-1450
www.uspto.gov

BRYAN CAVE LLP
TWO NORTH CENTRAL AVENUE, SUITE 2200
PHOENIX AZ 85004

In re Application of	:	
REIFEL, ALLAN J. et. al.	:	DECISION ON PETITION
Application No. 13/025,987	:	TO MAKE SPECIAL UNDER
Filed: February 11, 2011	:	THE GREEN TECHNOLOGY
Attorney Docket No. 0316362-NP1	:	PILOT PROGRAM

This is a decision on the petition under 37 CFR 1.102, filed November 4, 2011, to make the above-identified application special under the pilot program for applications pertaining to Green Technologies as set forth in 74 Federal Register Notice 64666 (December 8, 2009) and amended by 75 Federal Register Notice 28554 (May 21, 2010) and 75 Federal Register Notice 69049 (November 10, 2010).

The petition is **granted**.

A grantable petition to make an application special under 37 CFR 1.102 and the pilot program as set forth in 74 FR 64666 must be directed to a nonprovisional application filed under 35 USC 111(a) or be a national stage entry under 35 USC 371, exclusive of any reissue applications.

If reconsideration of this decision is desired, a petition for reconsideration must be filed within ONE (1) MONTH OR THIRTY (30) DAYS from the mail date of this decision, whichever is longer. No extension of this time limit can be granted under 37 CFR 1.136(a) or (b). The petition for reconsideration should include an exhaustive attempt to provide the lacking item(s) noted below, since, after a decision on the petition for reconsideration, no further reconsideration or review of the matter will be undertaken by the Director.

In order to qualify for special status, the following requirements must be met. 1) The application must have no more than 3 independent claims and no more than 20 total claims. 2) The application must not contain any multiple dependent claims. 3) The petition must state the basis for seeking special status, i.e., the claimed invention either: A) materially enhances the quality of the environment or B) materially contributes to: i) the discovery or development of renewable energy resources, ii) the more efficient utilization and conservation of energy resources, or iii) greenhouse gas emission reduction. 4) If the disclosure is not clear on its face that the claimed invention materially contributes under category (A) or (B), the petition must be accompanied by a statement by the applicant, assignee, or an attorney/agent registered to practice before the

Office explaining how the materiality standard is met. 5) A statement that applicant will agree to make an election without traverse in a telephonic interview if a restriction requirement is made by the examiner. 6) The petition to make special must be filed electronically. 7) The petition must be filed at least one day prior to the date that a first Office Action appears in the Patent Application Information Retrieval (PAIR) system. 8) The petition must be accompanied by a request for early publication in compliance with 37 CFR 1.219 and include the publication fee as set forth in 37 CFR 1.18(d).

The requirement for a fee for consideration of the petition to make special for applications pertaining to Green Technologies has been waived.

The instant petition complies with items 1 – 8 above. Accordingly, the above-identified application has been accorded "special" status.

Telephone inquires concerning this decision should be directed to Henry C. Yuen at 571-272-4856.

This application will be forwarded to the Technology Center Art Unit 3744 for action on the merits commensurate with this decision.

/Henry C. Yuen/

Henry C. Yuen
Quality Assurance Specialist
Technology Center TC 3700

UNITED STATES PATENT AND TRADEMARK OFFICE

Commissioner for Patents
United States Patent and Trademark Office
P.O. Box 1450
Alexandria, VA 22313-1450
www.uspto.gov

ROBERT J. VAN DER WALL
GRAND BAY PLAZA
2665 SOUTH BAYSHORE DRIVE
SUITE 420
COCONUT GROVE, FL 33133

MAILED
MAR 28 2011
OFFICE OF PETITIONS

In re Application of

Dorothey Tome
Application No. 13/025,996
Filed: February 11, 2011
Attorney Docket No. 1157-1

DECISION ON PETITION
TO MAKE SPECIAL UNDER
37 CFR 1.102(c)(1)

This is a decision on the petition under 37 CFR 1.102(c)(1), filed February 11, 2011, to make the above-identified application special based on applicant's age as set forth in M.P.E.P. § 708.02, Section IV.

The petition is **GRANTED**.

A grantable petition to make an application special under 37 CFR 1.102(c)(1) and MPEP § 708.02, Section IV: Applicant's Age must be accompanied by evidence showing that at least one of the applicants is 65 years of age, or more, such as a birth certificate or a statement by applicant. No fee is required

The instant petition includes a declaration statement signed by applicant. Accordingly, the above-identified application has been accorded "special" status.

Telephone inquiries concerning this decision should be directed to undersigned at 571-272-1642.

All other inquiries concerning either the examination or status of the application should be directed to the Technology Center.

The application is being forwarded to the Technology Center Art Unit 3711 for action on the merits commensurate with this decision.

/AMW/
April M. Wise
Petitions Examiner
Office of Petitions

Doc Code: PET.GREEN
Document Description: Petition for Green Tech Pilot

PTO/SB/420 (03-11)

PETITION TO MAKE SPECIAL UNDER THE GREEN TECHNOLOGY PILOT PROGRAM

Attorney Docket Number: 0316362-NP2	Application Number (if known): 13/026,003	Filing date: February 11, 2011

First Named Inventor: Allan J. Reifel et al.

Title: Condensing Gas Package Unit Configured to Drain Condensate Through Return Air Duct or Floor of Unit Enclosure

APPLICANT HEREBY REQUESTS TO PARTICIPATE IN THE GREEN TECHNOLOGY PILOT PROGRAM FOR THE ABOVE-IDENTIFIED APPLICATION. See Instruction Sheet on page 2.

This petition must be timely filed electronically using the USPTO electronic filing system, EFS-Web.

1. By filing this petition:

   Applicant is requesting early publication: Applicant hereby requests early publication under 37 CFR 1.219 and the publication fee set forth in 37 CFR 1.18(d) accompanies this request.

2. By filing this petition: applicant is agreeing to make an election without traverse in a telephonic interview and elect an invention that meets the eligibility requirements for the Green Technology Pilot Program, if the Office determines that the claims are not obviously directed to a single invention. See Instruction Sheet.

3. This request is accompanied by statements of special status for the eligibility requirement.

4. The application contains no more than three (3) independent claims and twenty (20) total claims.

5. The application does not contain any multiple dependent claims.

6. Other attachments: _____

Signature	Date February 11, 2011
Name (Print/Typed) Allan W. Watts	Registration Number 45,930

Note: *Signatures of all the inventors or assignees of record of the entire interest or their representative(s) are required in accordance with 37 CFR 1.33 and 11.18. Please see 37 CFR 1.4(d) for the form of the signature. If necessary, submit multiple forms for more than one signature, see below*.*

■ *Total of 1 forms are submitted.

If you need assistance in completing the form, call 1-800-PTO-9199 and select option 2.

Attorney Docket No. 0316362-NP2

IN THE UNITED STATES PATENT AND TRADEMARK OFFICE

In re Application of	:	Group Art Unit: 3744
Allan J. Reifel et al.	:	Examiner: TBD
Application No.: 13/026,003	:	Confirmation No.: 3916
Filed: February 11, 2011	:	

Title: Condensing Gas Package Unit Configured to Drain Condensate Through Return Air Duct or Floor of Unit Enclosure

STATEMENT OF SPECIAL STATUS FOR ELIGIBILITY INTO THE GREEN TECHNOLOGY PILOT PROGRAM

Commissioner for Patents
P.O. Box 1450
Alexandria, VA 22313-1450

Dear Sir:

This paper is being filed with form PTO/SB/420 prior to the issuance of a first Office Action in the above-identified matter in order to qualify for special status and accelerated examination under the Green Technology Pilot Program. This paper includes remarks explaining why this patent application qualifies for the Green Technology Pilot Program. A fee for early publication is being filed herewith. No other fee is believed to be due in conjunction with this paper, but if any fee is required for this paper, or if the above fee is missing or insufficient, please consider this to be a petition therefore and deduct any necessary fees from (or deposit any overpayment to) Deposit Account 02-4467.

REMARKS begin on page 2 of this paper.

REMARKS

This patent application qualifies for the Green Technology Pilot Program because the subject matter of this patent application pertains to environmental quality, energy conservation, and greenhouse gas emission reduction. Patent applications in any one of these areas qualify for this program, but this patent application pertains to all three. Specifically, the present invention helps to make practicable, at least in certain applications, condensing gas furnaces or gas package units. Condensing units are more efficient than prior non-condensing gas units because more energy is recovered from the products of combustion before those products of combustion are discarded. As a result, less fuel needs to be burned to provide the amount of heat that is needed. Consequently, this invention contributes to more efficient utilization and conservation of natural gas and propane (as examples) and at least proportionally reduces the emissions into the atmosphere of pollutants traditionally associated with the combustion of fossil fuels such as carbon monoxide, hydrocarbons, and oxides of nitrogen. In addition, since less natural gas or propane is burned, this invention at least proportionally contributes to the reduction of the emission of greenhouse gasses such as carbon dioxide and any unburned methane in comparison, for example, with prior gas furnace technology.

Condensing furnaces have previously been used to reduce consumption of fossil fuels (e.g., natural gas or propane) burned in furnaces to provide heating. Condensing gas furnaces, however, have typically been located indoors. In such installations, condensate was typically drained into a sewer in a conventional manner. Many buildings, however, are configured to have an HVAC unit installed on the roof of the building or on the ground outside the building. In the past, such applications have typically not permitted use of a condensing furnace because condensate from the furnace would freeze when local ambient temperatures were below freezing. Frozen condensate would interfere with continued operation of the unit, collect causing a hazard or nuisance, or a combination thereof, as examples.

A number of reasons exist to reduce consumption of fossil fuels. These reasons include, as examples, reducing fuel bills for the building owner, reducing greenhouse gas

(e.g., carbon dioxide) production, reducing emissions of traditional pollutants such as carbon monoxide, hydrocarbons, and oxides of nitrogen, reducing dependency on limited fossil fuel reserves, reducing dependency on foreign sources of fossil fuels, and reducing environmental damage and risk associated with extraction of fossil fuels. Since many buildings are configured for HVAC units that are located outdoors, conversion of outdoor gas package units to condensing gas package units has the potential to significantly reduce consumption of fossil fuels. Consequently, needs or potential for benefit exist for equipment, apparatuses, and methods that allow condensing gas furnaces to be installed and used outdoors. In particular, needs or potential for benefit exist for equipment, apparatuses, and methods that prevent problems that result from the freezing of condensate from condensing furnaces that are installed outdoors. Needs or potential for benefit exist for equipment, apparatuses, and methods that prevent frozen condensate from interfering with continued operation of the HVAC unit, from collecting, from causing a hazard or nuisance, or a combination thereof, as examples.

Furthermore, condensing gas furnaces, means and methods of disposing of condensate from gas furnaces, and devices that make such equipment and systems possible for outdoor installations are needed or would be beneficial that are sufficiently reliable, inexpensive, and easy to install and service so as to be practical in a mass-production context. Needs or potential for benefit or improvement exist for methods of manufacturing condensing gas package units, HVAC equipment and HVAC units having condensing furnaces, and systems and buildings having such devices. Other needs or potential for benefit or improvement may also be described in this patent application or known in the HVAC or fossil fuel industries. Room for improvement exists over the prior art in these and other areas that may be apparent to a person of ordinary skill in the art having studied this patent application.

Various claims of this patent application concern air conditioning units packaged with condensing gas heat exchangers that have certain improvements to facilitate proper disposal of condensate. All such claims help to make practicable, at least in certain applications, condensing gas furnaces or gas package units, and thereby, contribute to

more efficient utilization and conservation of natural gas and propane, reduce the emissions of pollutants traditionally associated with the combustion of fossil fuels, and reduce the emission of greenhouse gasses, for example, in comparison with prior gas furnace technology. If any one of these benefits exist, all such claims qualify for the Green Technology Pilot Program.

The statements made herein and in the other documents filed for this patent application should not be construed as an admission or assertion that any claim of this patent application would have been obvious over any other claim or that any two claims are not patentably distinct or independent. Nor should the statements made or silence herein be construed as consent or acceptance of any statement made by any other party unless specifically stated as such herein.

Consideration and allowance of all pending claims is requested. Should the Examiner believe that a discussion would help to advance allowance of this patent application, the Examiner is invited to telephone the undersigned.

Respectfully submitted,

Date: 11-4-11

By

Allan W. Watts
U.S. Reg. No. 45,930
Bryan Cave LLP
One Renaissance Square
Two North Central Avenue,
Suite 2200
Phoenix, AZ 85004-4406
allan.watts@bryancave.com
Direct: 602-364-7331

UNITED STATES PATENT AND TRADEMARK OFFICE

UNITED STATES DEPARTMENT OF COMMERCE
United States Patent and Trademark Office
Address: COMMISSIONER FOR PATENTS
P.O. Box 1450
Alexandria, Virginia 22313-1450
www.uspto.gov

APPLICATION NO.	FILING DATE	FIRST NAMED INVENTOR	ATTORNEY DOCKET NO.	CONFIRMATION NO.
13/026,003	02/11/2011	Allan J. Reifel	0316362-NP2	3916

46019 7590 11/25/2011
BRYAN CAVE LLP
TWO NORTH CENTRAL AVENUE, SUITE 2200
PHOENIX, AZ 85004

EXAMINER

ART UNIT	PAPER NUMBER
3744	

MAIL DATE	DELIVERY MODE
11/25/2011	PAPER

Please find below and/or attached an Office communication concerning this application or proceeding.

The time period for reply, if any, is set in the attached communication.

UNITED STATES PATENT AND TRADEMARK OFFICE

Commissioner for Patents
United States Patent and Trademark Office
P.O. Box 1450
Alexandria, VA 22313-1450
www.uspto.gov

BRYAN CAVE LLP
TWO NORTH CENTRAL AVENUE, SUITE 2200
PHOENIX AZ 85004

In re Application of	:	
REIFEL, ALLAN J. et. al.	:	DECISION ON PETITION
Application No. 13/026,003	:	TO MAKE SPECIAL UNDER
Filed: February 11, 2011	:	THE GREEN TECHNOLOGY
Attorney Docket No. 0316362-NP2	:	PILOT PROGRAM

This is a decision on the petition under 37 CFR 1.102, filed November 4, 2011, to make the above-identified application special under the pilot program for applications pertaining to Green Technologies as set forth in 74 Federal Register Notice 64666 (December 8, 2009) and amended by 75 Federal Register Notice 28554 (May 21, 2010) and 75 Federal Register Notice 69049 (November 10, 2010).

The petition is **granted**.

A grantable petition to make an application special under 37 CFR 1.102 and the pilot program as set forth in 74 FR 64666 must be directed to a nonprovisional application filed under 35 USC 111(a) or be a national stage entry under 35 USC 371, exclusive of any reissue applications.

If reconsideration of this decision is desired, a petition for reconsideration must be filed within ONE (1) MONTH OR THIRTY (30) DAYS from the mail date of this decision, whichever is longer. No extension of this time limit can be granted under 37 CFR 1.136(a) or (b). The petition for reconsideration should include an exhaustive attempt to provide the lacking item(s) noted below, since, after a decision on the petition for reconsideration, no further reconsideration or review of the matter will be undertaken by the Director.

In order to qualify for special status, the following requirements must be met. 1) The application must have no more than 3 independent claims and no more than 20 total claims. 2) The application must not contain any multiple dependent claims. 3) The petition must state the basis for seeking special status, i.e., the claimed invention either: A) materially enhances the quality of the environment or B) materially contributes to: i) the discovery or development of renewable energy resources, ii) the more efficient utilization and conservation of energy resources, or iii) greenhouse gas emission reduction. 4) If the disclosure is not clear on its face that the claimed invention materially contributes under category (A) or (B), the petition must be accompanied by a statement by the applicant, assignee, or an attorney/agent registered to practice before the

Office explaining how the materiality standard is met. 5) A statement that applicant will agree to make an election without traverse in a telephonic interview if a restriction requirement is made by the examiner. 6) The petition to make special must be filed electronically. 7) The petition must be filed at least one day prior to the date that a first Office Action appears in the Patent Application Information Retrieval (PAIR) system. 8) The petition must be accompanied by a request for early publication in compliance with 37 CFR 1.219 and include the publication fee as set forth in 37 CFR 1.18(d).

The requirement for a fee for consideration of the petition to make special for applications pertaining to Green Technologies has been waived.

The instant petition complies with items 1 – 8 above. Accordingly, the above-identified application has been accorded "special" status.

Telephone inquires concerning this decision should be directed to Henry C. Yuen at 571-272-4856.

This application will be forwarded to the Technology Center Art Unit 3744 for action on the merits commensurate with this decision.

/Henry C. Yuen/

Henry C. Yuen
Quality Assurance Specialist
Technology Center TC 3700

UNITED STATES PATENT AND TRADEMARK OFFICE

Commissioner for Patents
United States Patent and Trademark Office
P.O. Box 1450
Alexandria, VA 22313-1450
www.uspto.gov

LEASON ELLIS LLP
81 MAIN STREET
SUITE 503
WHITE PLAINS NY 10601

MAILED

APR 22 2011

OFFICE OF PETITIONS

In re Application of	:	
RAO, Gottipaty	:	
Application No. 13/026,011	:	DECISION ON PETITION
Filed: February 11, 2011	:	TO MAKE SPECIAL UNDER
Attorney Docket No. 0985/1705-US2	:	37 CFR 1.102(c)(1)
	:	

This is a decision on the petition under 37 CFR 1.102(c)(1), filed March 15, 2011, to make the above-identified application special based on applicant's age as set forth in M.P.E.P. § 708.02, Section IV.

The petition is **GRANTED**.

A grantable petition to make an application special under 37 CFR 1.102(c)(1) and MPEP § 708.02, Section IV: Applicant's Age must be accompanied by evidence showing that at least one of the applicants is 65 years of age, or more, such as a birth certificate or a statement by applicant. No fee is required

The instant petition includes a statement by Gottipaty Rao, attesting to his age. Accordingly, the above-identified application will be accorded "special" status.

Telephone inquiries concerning this decision should be directed to Tredelle Jackson at 571-272-2783.

All other inquiries concerning either the examination or status of the application should be directed to the Technology Center.

The application is being forwarded to the Technology Center Art Unit 2886 for action on the merits commensurate with this decision.

/Tredelle D. Jackson/
Paralegal Specialist
Office of Petitions

UNITED STATES PATENT AND TRADEMARK OFFICE

Commissioner for Patents
United States Patent and Trademark Office
P.O. Box 1450
Alexandria, VA 22313-1450
www.uspto.gov

Leason Ellis LLP
One Barker Avenue
Fifth Floor
White Plains, NY 10601-1526

MAILED

FEB 27 2012

OFFICE OF PETITIONS

In re Application of Gottipaty Rao :
Application No. 13/026,011 : DECISION ON PETITION
Filing Date: February 11, 2011 : UNDER 37 CFR 1.78(a)(3)
Attorney Docket No. 00985/001705-US2 :

This is a decision on the petition under 37 CFR 1.78(a)(3) filed January 13, 2012, to accept an unintentionally delayed claim under 35 U.S.C. § 120 for the benefit of priority to the prior-filed nonprovisional application set forth in the amendment filed with the petition.

The petition is **GRANTED**.

A petition for acceptance of a claim for late priority under 37 CFR 1.78(a)(3) is only applicable to those applications filed on or after November 29, 2000. Further, the petition is appropriate only after the expiration of the period specified in 37 CFR 1.78(a)(2)(ii). In addition, the petition under 37 CFR 1.78(a)(3) must be accompanied by:

(1) the reference required by 35 U.S.C. § 120 and 37 CFR 1.78(a)(2)(i) of the prior-filed application, unless previously submitted;
(2) the surcharge set forth in § 1.17(t); and
(3) a statement that the entire delay between the date the claim was due under 37 CFR 1.78(a)(2)(ii) and the date the claim was filed was unintentional. The Director may require additional information where there is a question whether the delay was unintentional.

All of the above requirements having been satisfied, the late claim for priority under 35 U.S.C. § 120 is accepted as being unintentionally delayed.

The granting of the petition to accept the delayed benefit claim to the prior-filed applications under 37 CFR 1.78(a)(3) should not be construed as meaning that this application is entitled to the benefit of the prior-filed application. In order for this application to be entitled to the benefit of the prior-filed application, all other requirements under 35 U.S.C. § 120 and 37 CFR 1.78(a)(1) and (a)(2) must be met. Similarly, the fact that the corrected Filing Receipt accompanying this decision on petition includes the

prior-filed application should not be construed as meaning that applicant is entitled to the claim for benefit of priority to the prior-filed applications noted thereon. Accordingly, the examiner will, in due course, consider this benefit claim and determine whether the application is entitled to the benefit of the earlier filing date.

A corrected Filing Receipt, which includes the priority claim to the prior-filed nonprovisional application, accompanies this decision on petition.

This application is being forwarded to Technology Center Art Unit 2886 for consideration by the examiner of the amendment filed January 13, 2012, which includes applicant's priority claim under 35 U.S.C. § 120 based on the prior filed application.

Any inquiries concerning this decision may be directed to Senior Petitions Attorney Steven Brantley at (571) 272-3203. All other inquiries concerning either the examination procedures or status of the application should be directed to the Technology Center.

Charles Steven Brantley
Senior Petitions Attorney
Office of Petitions

ATTACHMENT: Corrected Filing Receipt

UNITED STATES PATENT AND TRADEMARK OFFICE

UNITED STATES DEPARTMENT OF COMMERCE
United States Patent and Trademark Office
Address: COMMISSIONER FOR PATENTS
P.O. Box 1450
Alexandria, Virginia 22313-1450
www.uspto.gov

APPLICATION NUMBER	FILING or 371(c) DATE	GRP ART UNIT	FIL FEE REC'D	ATTY.DOCKET.NO	TOT CLAIMS	IND CLAIMS
13/026,011	02/11/2011	2886	1220	00985/001705-US2	28	2

CONFIRMATION NO. 3925

CORRECTED FILING RECEIPT

76808
Leason Ellis LLP
One Barker Avenue
Fifth Floor
White Plains, NY 10601-1526

OC000000052772672

Date Mailed: 02/24/2012

Receipt is acknowledged of this non-provisional patent application. The application will be taken up for examination in due course. Applicant will be notified as to the results of the examination. Any correspondence concerning the application must include the following identification information: the U.S. APPLICATION NUMBER, FILING DATE, NAME OF APPLICANT, and TITLE OF INVENTION. Fees transmitted by check or draft are subject to collection. Please verify the accuracy of the data presented on this receipt. **If an error is noted on this Filing Receipt, please submit a written request for a Filing Receipt Correction. Please provide a copy of this Filing Receipt with the changes noted thereon. If you received a "Notice to File Missing Parts" for this application, please submit any corrections to this Filing Receipt with your reply to the Notice. When the USPTO processes the reply to the Notice, the USPTO will generate another Filing Receipt incorporating the requested corrections**

Applicant(s)
Gottipaty Rao, West Hempstead, NY;

Assignment For Published Patent Application
Adelphi University, Garden City, NY

Power of Attorney: The patent practitioners associated with Customer Number 76808

Domestic Priority data as claimed by applicant
This application is a CIP of 12/878,553 09/09/2010

Foreign Applications (You may be eligible to benefit from the **Patent Prosecution Highway** program at the USPTO. Please see http://www.uspto.gov for more information.)

If Required, Foreign Filing License Granted: 02/24/2011

The country code and number of your priority application, to be used for filing abroad under the Paris Convention, is **US 13/026,011**

Projected Publication Date: 06/07/2012

Non-Publication Request: No

Early Publication Request: No
**** SMALL ENTITY ****

Title

METHOD AND APPARATUS FOR TRACE GAS DETECTION USING OFF-AXIS CAVITY AND MULTIPLE LINE INTEGRATED SPECTROSCOPY

Preliminary Class

356

PROTECTING YOUR INVENTION OUTSIDE THE UNITED STATES

Since the rights granted by a U.S. patent extend only throughout the territory of the United States and have no effect in a foreign country, an inventor who wishes patent protection in another country must apply for a patent in a specific country or in regional patent offices. Applicants may wish to consider the filing of an international application under the Patent Cooperation Treaty (PCT). An international (PCT) application generally has the same effect as a regular national patent application in each PCT-member country. The PCT process **simplifies** the filing of patent applications on the same invention in member countries, but **does not result** in a grant of "an international patent" and does not eliminate the need of applicants to file additional documents and fees in countries where patent protection is desired.

Almost every country has its own patent law, and a person desiring a patent in a particular country must make an application for patent in that country in accordance with its particular laws. Since the laws of many countries differ in various respects from the patent law of the United States, applicants are advised to seek guidance from specific foreign countries to ensure that patent rights are not lost prematurely.

Applicants also are advised that in the case of inventions made in the United States, the Director of the USPTO must issue a license before applicants can apply for a patent in a foreign country. The filing of a U.S. patent application serves as a request for a foreign filing license. The application's filing receipt contains further information and guidance as to the status of applicant's license for foreign filing.

Applicants may wish to consult the USPTO booklet, "General Information Concerning Patents" (specifically, the section entitled "Treaties and Foreign Patents") for more information on timeframes and deadlines for filing foreign patent applications. The guide is available either by contacting the USPTO Contact Center at 800-786-9199, or it can be viewed on the USPTO website at http://www.uspto.gov/web/offices/pac/doc/general/index.html.

For information on preventing theft of your intellectual property (patents, trademarks and copyrights), you may wish to consult the U.S. Government website, http://www.stopfakes.gov. Part of a Department of Commerce initiative, this website includes self-help "toolkits" giving innovators guidance on how to protect intellectual property in specific countries such as China, Korea and Mexico. For questions regarding patent enforcement issues, applicants may call the U.S. Government hotline at 1-866-999-HALT (1-866-999-4158).

LICENSE FOR FOREIGN FILING UNDER

Title 35, United States Code, Section 184

Title 37, Code of Federal Regulations, 5.11 & 5.15

GRANTED

The applicant has been granted a license under 35 U.S.C. 184, if the phrase "IF REQUIRED, FOREIGN FILING LICENSE GRANTED" followed by a date appears on this form. Such licenses are issued in all applications where

the conditions for issuance of a license have been met, regardless of whether or not a license may be required as set forth in 37 CFR 5.15. The scope and limitations of this license are set forth in 37 CFR 5.15(a) unless an earlier license has been issued under 37 CFR 5.15(b). The license is subject to revocation upon written notification. The date indicated is the effective date of the license, unless an earlier license of similar scope has been granted under 37 CFR 5.13 or 5.14.

This license is to be retained by the licensee and may be used at any time on or after the effective date thereof unless it is revoked. This license is automatically transferred to any related applications(s) filed under 37 CFR 1.53(d). This license is not retroactive.

The grant of a license does not in any way lessen the responsibility of a licensee for the security of the subject matter as imposed by any Government contract or the provisions of existing laws relating to espionage and the national security or the export of technical data. Licensees should apprise themselves of current regulations especially with respect to certain countries, of other agencies, particularly the Office of Defense Trade Controls, Department of State (with respect to Arms, Munitions and Implements of War (22 CFR 121-128)); the Bureau of Industry and Security, Department of Commerce (15 CFR parts 730-774); the Office of Foreign AssetsControl, Department of Treasury (31 CFR Parts 500+) and the Department of Energy.

NOT GRANTED

No license under 35 U.S.C. 184 has been granted at this time, if the phrase "IF REQUIRED, FOREIGN FILING LICENSE GRANTED" DOES NOT appear on this form. Applicant may still petition for a license under 37 CFR 5.12, if a license is desired before the expiration of 6 months from the filing date of the application. If 6 months has lapsed from the filing date of this application and the licensee has not received any indication of a secrecy order under 35 U.S.C. 181, the licensee may foreign file the application pursuant to 37 CFR 5.15(b).

SelectUSA

The United States represents the largest, most dynamic marketplace in the world and is an unparalleled location for business investment, innovation and commercialization of new technologies. The USA offers tremendous resources and advantages for those who invest and manufacture goods here. Through SelectUSA, our nation works to encourage, facilitate, and accelerate business investment. To learn more about why the USA is the best country in the world to develop technology, manufacture products, and grow your business, visit SelectUSA.gov.

Doc Code: PET.GREEN
Document Description: Petition for Green Tech Pilot

PTO/SB/420 (03-11)

PETITION TO MAKE SPECIAL UNDER THE GREEN TECHNOLOGY PILOT PROGRAM

Attorney Docket Number: 0316362-NP3	Application Number (if known): 13/026,014	Filing date: February 11, 2011

First Named Inventor: Allan J. Reifel et al.

Title: Condensing Gas Package Unit Configured to Drain Condensate Through Inducer Fan and Method of Reducing Fuel Consumption

APPLICANT HEREBY REQUESTS TO PARTICIPATE IN THE GREEN TECHNOLOGY PILOT PROGRAM FOR THE ABOVE-IDENTIFIED APPLICATION. See Instruction Sheet on page 2.

This petition must be timely filed electronically using the USPTO electronic filing system, EFS-Web.

1. By filing this petition:

   Applicant is requesting early publication: Applicant hereby requests early publication under 37 CFR 1.219 and the publication fee set forth in 37 CFR 1.18(d) accompanies this request.

2. By filing this petition: applicant is agreeing to make an election without traverse in a telephonic interview and elect an invention that meets the eligibility requirements for the Green Technology Pilot Program, if the Office determines that the claims are not obviously directed to a single invention. See Instruction Sheet.

3. This request is accompanied by statements of special status for the eligibility requirement.

4. The application contains no more than three (3) independent claims and twenty (20) total claims.

5. The application does not contain any multiple dependent claims.

6. Other attachments: Preliminary Amendment

Signature	Date February 11, 2011
Name (Print/Typed) Allan W. Watts	Registration Number 45,930

Note: *Signatures of all the inventors or assignees of record of the entire interest or their representative(s) are required in accordance with 37 CFR 1.33 and 11.18. Please see 37 CFR 1.4(d) for the form of the signature. If necessary, submit multiple forms for more than one signature, see below*.*

☒ *Total of 1 forms are submitted.

If you need assistance in completing the form, call 1-800-PTO-9199 and select option 2.

Attorney Docket No. 0316362-NP3

IN THE UNITED STATES PATENT AND TRADEMARK OFFICE

In re Application of	Group Art Unit: 3749
Allan J. Reifel et al.	Examiner: TBD
Application No.: 13/026,014	Confirmation No.: 3932
Filed: February 11, 2011	

Title: Condensing Gas Package Unit Configured to Drain Condensate Through Inducer Fan and Method of Reducing Fuel Consumption

STATEMENT OF SPECIAL STATUS FOR ELIGIBILITY INTO THE GREEN TECHNOLOGY PILOT PROGRAM

Commissioner for Patents
P.O. Box 1450
Alexandria, VA 22313-1450

Dear Sir:

This paper is being filed with form PTO/SB/420 prior to the issuance of a first Office Action in the above-identified matter in order to qualify for special status and accelerated examination under the Green Technology Pilot Program. This paper includes remarks explaining why this patent application qualifies for the Green Technology Pilot Program. A fee for early publication is being filed herewith. No other fee is believed to be due in conjunction with this paper, but if any fee is required for this paper, or if the above fee is missing or insufficient, please consider this to be a petition therefore and deduct any necessary fees from (or deposit any overpayment to) Deposit Account 02-4467.

REMARKS begin on page 2 of this paper.

REMARKS

This patent application qualifies for the Green Technology Pilot Program because the subject matter of this patent application pertains to environmental quality, energy conservation, and greenhouse gas emission reduction. Patent applications in any one of these areas qualify for this program, but this patent application pertains to all three. Specifically, the present invention helps to make practicable, at least in certain applications, condensing gas furnaces or gas package units. Condensing units are more efficient than prior non-condensing gas units because more energy is recovered from the products of combustion before those products of combustion are discarded. As a result, less fuel needs to be burned to provide the amount of heat that is needed. Consequently, this invention contributes to more efficient utilization and conservation of natural gas and propane (as examples) and at least proportionally reduces the emissions into the atmosphere of pollutants traditionally associated with the combustion of fossil fuels such as carbon monoxide, hydrocarbons, and oxides of nitrogen. In addition, since less natural gas or propane is burned, this invention at least proportionally contributes to the reduction of the emission of greenhouse gasses such as carbon dioxide and any unburned methane in comparison, for example, with prior gas furnace technology.

Condensing furnaces have previously been used to reduce consumption of fossil fuels (e.g., natural gas or propane) burned in furnaces to provide heating. Condensing gas furnaces, however, have typically been located indoors. In such installations, condensate was typically drained into a sewer in a conventional manner. Many buildings, however, are configured to have an HVAC unit installed on the roof of the building or on the ground outside the building. In the past, such applications have typically not permitted use of a condensing furnace because condensate from the furnace would freeze when local ambient temperatures were below freezing. Frozen condensate would interfere with continued operation of the unit, collect causing a hazard or nuisance, or a combination thereof, as examples.

A number of reasons exist to reduce consumption of fossil fuels. These reasons include, as examples, reducing fuel bills for the building owner, reducing greenhouse gas

(e.g., carbon dioxide) production, reducing emissions of traditional pollutants such as carbon monoxide, hydrocarbons, and oxides of nitrogen, reducing dependency on limited fossil fuel reserves, reducing dependency on foreign sources of fossil fuels, and reducing environmental damage and risk associated with extraction of fossil fuels. Since many buildings are configured for HVAC units that are located outdoors, conversion of outdoor gas package units to condensing gas package units has the potential to significantly reduce consumption of fossil fuels. Consequently, needs or potential for benefit exist for equipment, apparatuses, and methods that allow condensing gas furnaces to be installed and used outdoors. In particular, needs or potential for benefit exist for equipment, apparatuses, and methods that prevent problems that result from the freezing of condensate from condensing furnaces that are installed outdoors. Needs or potential for benefit exist for equipment, apparatuses, and methods that prevent frozen condensate from interfering with continued operation of the HVAC unit, from collecting, from causing a hazard or nuisance, or a combination thereof, as examples.

Furthermore, condensing gas furnaces, means and methods of disposing of condensate from gas furnaces, and devices that make such equipment and systems possible for outdoor installations are needed or would be beneficial that are sufficiently reliable, inexpensive, and easy to install and service so as to be practical in a mass-production context. Needs or potential for benefit or improvement exist for methods of manufacturing condensing gas package units, HVAC equipment and HVAC units having condensing furnaces, and systems and buildings having such devices. Other needs or potential for benefit or improvement may also be described in this patent application or known in the HVAC or fossil fuel industries. Room for improvement exists over the prior art in these and other areas that may be apparent to a person of ordinary skill in the art having studied this patent application.

Various claims of this patent application concern air conditioning units packaged with condensing gas heat exchangers that have certain improvements to facilitate proper disposal of condensate. Other claims specifically concern methods of reducing consumption of fossil fuels and emissions of greenhouse gasses from HVAC equipment.

All such claims help to make practicable, at least in certain applications, condensing gas furnaces or gas package units, and thereby, contribute to more efficient utilization and conservation of natural gas and propane, reduce the emissions of pollutants traditionally associated with the combustion of fossil fuels, and reduce the emission of greenhouse gasses, for example, in comparison with prior gas furnace technology. If any one of these benefits exist, all such claims qualify for the Green Technology Pilot Program.

The statements made herein and in the other documents filed for this patent application should not be construed as an admission or assertion that any claim of this patent application would have been obvious over any other claim or that any two claims are not patentably distinct or independent. Nor should the statements made or silence herein be construed as consent or acceptance of any statement made by any other party unless specifically stated as such herein.

Consideration and allowance of all pending claims is requested. Should the Examiner believe that a discussion would help to advance allowance of this patent application, the Examiner is invited to telephone the undersigned.

Respectfully submitted,

Date: 11-4-11

By

Allan W. Watts
U.S. Reg. No. 45,930
Bryan Cave LLP
One Renaissance Square
Two North Central Avenue,
Suite 2200
Phoenix, AZ 85004-4406
allan.watts@bryancave.com
Direct: 602-364-7331

UNITED STATES PATENT AND TRADEMARK OFFICE

UNITED STATES DEPARTMENT OF COMMERCE
United States Patent and Trademark Office
Address: COMMISSIONER FOR PATENTS
P.O. Box 1450
Alexandria, Virginia 22313-1450
www.uspto.gov

APPLICATION NO.	FILING DATE	FIRST NAMED INVENTOR	ATTORNEY DOCKET NO.	CONFIRMATION NO.
13/026,014	02/11/2011	Allan J. Reifel	0316362-NP3	3932

46019 7590 11/25/2011
BRYAN CAVE LLP
TWO NORTH CENTRAL AVENUE, SUITE 2200
PHOENIX, AZ 85004

EXAMINER

ART UNIT	PAPER NUMBER
3749	

MAIL DATE	DELIVERY MODE
11/25/2011	PAPER

Please find below and/or attached an Office communication concerning this application or proceeding.

The time period for reply, if any, is set in the attached communication.

UNITED STATES PATENT AND TRADEMARK OFFICE

Commissioner for Patents
United States Patent and Trademark Office
P.O. Box 1450
Alexandria, VA 22313-1450
www.uspto.gov

BRYAN CAVE LLP
TWO NORTH CENTRAL AVENUE, SUITE 2200
PHOENIX AZ 85004

In re Application of	:	
REIFEL, ALLAN J. et. al.	:	DECISION ON PETITION
Application No. 13/026,014	:	TO MAKE SPECIAL UNDER
Filed: February 11, 2011	:	THE GREEN TECHNOLOGY
Attorney Docket No. 0316362-NP3	:	PILOT PROGRAM

This is a decision on the petition under 37 CFR 1.102, filed November 4, 2011, to make the above-identified application special under the pilot program for applications pertaining to Green Technologies as set forth in 74 Federal Register Notice 64666 (December 8, 2009) and amended by 75 Federal Register Notice 28554 (May 21, 2010) and 75 Federal Register Notice 69049 (November 10, 2010).

The petition is **granted**.

A grantable petition to make an application special under 37 CFR 1.102 and the pilot program as set forth in 74 FR 64666 must be directed to a nonprovisional application filed under 35 USC 111(a) or be a national stage entry under 35 USC 371, exclusive of any reissue applications.

If reconsideration of this decision is desired, a petition for reconsideration must be filed within ONE (1) MONTH OR THIRTY (30) DAYS from the mail date of this decision, whichever is longer. No extension of this time limit can be granted under 37 CFR 1.136(a) or (b). The petition for reconsideration should include an exhaustive attempt to provide the lacking item(s) noted below, since, after a decision on the petition for reconsideration, no further reconsideration or review of the matter will be undertaken by the Director.

In order to qualify for special status, the following requirements must be met. 1) The application must have no more than 3 independent claims and no more than 20 total claims. 2) The application must not contain any multiple dependent claims. 3) The petition must state the basis for seeking special status, i.e., the claimed invention either: A) materially enhances the quality of the environment or B) materially contributes to: i) the discovery or development of renewable energy resources, ii) the more efficient utilization and conservation of energy resources, or iii) greenhouse gas emission reduction. 4) If the disclosure is not clear on its face that the claimed invention materially contributes under category (A) or (B), the petition must be accompanied by a statement by the applicant, assignee, or an attorney/agent registered to practice before the

Office explaining how the materiality standard is met. 5) A statement that applicant will agree to make an election without traverse in a telephonic interview if a restriction requirement is made by the examiner. 6) The petition to make special must be filed electronically. 7) The petition must be filed at least one day prior to the date that a first Office Action appears in the Patent Application Information Retrieval (PAIR) system. 8) The petition must be accompanied by a request for early publication in compliance with 37 CFR 1.219 and include the publication fee as set forth in 37 CFR 1.18(d).

The requirement for a fee for consideration of the petition to make special for applications pertaining to Green Technologies has been waived.

The instant petition complies with items 1 – 8 above. Accordingly, the above-identified application has been accorded "special" status.

Telephone inquires concerning this decision should be directed to Henry C. Yuen at 571-272-4856.

This application will be forwarded to the Technology Center Art Unit 3749 for action on the merits commensurate with this decision.

/Henry C. Yuen/

Henry C. Yuen
Quality Assurance Specialist
Technology Center TC 3700

PTO/SB/20PCT-KR (06-10)
Approved for use through 01/31/2012. OMB 0651-0058
U.S. Patent and Trademark Office; U. S. DEPARTMENT OF COMMERCE
Under the Paperwork Reduction Act of 1995, no persons are required to respond to a collection of information unless it displays a valid OMB control number.

REQUEST FOR PARTICIPATION IN THE PATENT COOPERATION TREATY - PATENT PROSECUTION HIGHWAY (PCT-PPH) PILOT PROGRAM BETWEEN THE KOREAN INTELLECTUAL PROPERTY OFFICE (KIPO) AND THE USPTO

Application No:	13026034	Filing date:	February 11, 2011
First Named Inventor:	Fredrick D. CURTIS		
Title of the Invention:	PRESSURE CONTROL DEVICE WITH REMOTE ORIENTATION RELATIVE TO A RIG		

THIS REQUEST FOR PARTICIPATION IN THE PCT-PPH PILOT PROGRAM ALONG WITH THE REQUIRED DOCUMENTS MUST BE SUBMITTED VIA EFS-WEB. INFORMATION REGARDING EFS-WEB IS AVAILABLE AT HTTP://WWW.USPTO.GOV/EBC/EFS_HELP.HTML

APPLICANT HEREBY REQUESTS PARTICIPATION IN THE PCT-PPH PROGRAM AND PETITIONS TO MAKE THE ABOVE-IDENTIFIED APPLICATION SPECIAL UNDER THE PCT-PPH PROGRAM.

The above-identified application is (1) a national stage entry of the corresponding PCT application, or (2) a national stage entry of another PCT application which claims priority to the corresponding PCT application, or (3) a national application that claims domestic/ foreign priority to the corresponding PCT application, or (4) a national application which forms the basis for the priority claim in the corresponding PCT application, or (5) a continuing application of a U.S. application that satisfies one of (1) to (4) above, or (6) a U.S. application that claims domestic benefit to a U.S. provisional application which forms the basis for the priority claim in the corresponding PCT application.

The corresponding PCT application number(s) is/are: PCT/US10/25385

The international date of the corresponding PCT application(s) is/are: 25 February 2010

I. List of Required Documents:

a. **A copy of the latest international work product (WO/ISA, WO/IPEA, or IPER) in the above–identified corresponding PCT application(s)**

- [x] Is attached.
- [ ] Is not attached because the document is already in the U.S. application.

b. **A copy of all claims which were indicated as having novelty, inventive step and industrial applicability in the above-identified corresponding PCT application(s).**

- [x] Is attached.
- [ ] Is not attached because the document is already in the U.S. application.

c. **English translations of the documents in a. and b. above are attached (if the documents are not in the English language). A statement that the English translation is accurate is attached for the document in b. above.**

This collection of information is required by 35 U.S.C. 119, 37 CFR 1.55, and 37 CFR 1.102(d). The information is required to obtain or retain a benefit by the public, which is to file (and by the USPTO to process) an application. Confidentiality is governed by 35 U.S.C. 122 and 37 CFR 1.11 and 1.14. This collection is estimated to take 2 hours to complete, including gathering, preparing, and submitting the completed application form to the USPTO. Time will vary depending upon the individual case. Any comments on the amount of time you require to complete this form and/or suggestions for reducing this burden should be sent to the Chief Information Officer, U.S. Patent and Trademark Office, U.S. Department of Commerce, P.O. Box 1450, Alexandria, VA 22313-1450. DO NOT SEND FEES OR COMPLETED FORMS TO THIS ADDRESS.

Approved for use through 01/31/2012. OMB 0651-0058
U.S.Patent and Trademark Office; U.S. DEPARTMENT OF COMMERCE
Under the Paperwork Reduction Act of 1995, no persons are required to respond to a collection of information unless it displays a valid OMB control number.

REQUEST FOR PARTICIPATION IN THE PCT-PPH PILOT PROGRAM BETWEEN THE KIPO AND THE USPTO

(continued)

Application No.:	13/026,034
First Named Inventor:	Fredrick D. CURTIS

d. **(1) An information disclosure statement listing the documents cited in the international work products (ISR, WO/ISA, WO/IPEA, IPER) of the corresponding PCT application.**

☒ Is attached

☐ Has already been filed in the above-identified U.S. application on _____

(2) Copies of all documents (except) for U.S. patents or U.S. patent application publications)

☒ Are attached.

Have already been filed in the above-identified U.S. application on _____

II. Claims Correspondence Table:

Claims in US Application	Patentable Claims in the corresponding PCT Application	Explanation regarding the correspondence
1 - 41	1 - 41	IDENTICAL

III. All the claims in the US application sufficiently correspond to the patentable claims in the corresponding PCT application.

Signature	/Marlin R. Smith/	Date	March 24, 2011
Name (Print/Typed)	Marlin R. Smith	Registration Number	38310

Privacy Act Statement

The **Privacy Act of 1974 (P.L. 93-579)** requires that you be given certain information in connection with your submission of the attached form related to a patent application or patent. Accordingly, pursuant to the requirements of the Act, please be advised that: (1) the general authority for the collection of this information is 35 U.S.C. 2(b)(2); (2) furnishing of the information solicited is voluntary; and (3) the principal purpose for which the information is used by the U.S. Patent and Trademark Office is to process and/or examine your submission related to a patent application or patent. If you do not furnish the requested information, the U.S. Patent and Trademark Office may not be able to process and/or examine your submission, which may result in termination of proceedings or abandonment of the application or expiration of the patent.

The information provided by you in this form will be subject to the following routine uses:

1. The information on this form will be treated confidentially to the extent allowed under the Freedom of Information Act (5 U.S.C. 552) and the Privacy Act (5 U.S.C 552a). Records from this system of records may be disclosed to the Department of Justice to determine whether disclosure of these records is required by the Freedom of Information Act.
2. A record from this system of records may be disclosed, as a routine use, in the course of presenting evidence to a court, magistrate, or administrative tribunal, including disclosures to opposing counsel in the course of settlement negotiations.
3. A record in this system of records may be disclosed, as a routine use, to a Member of Congress submitting a request involving an individual, to whom the record pertains, when the individual has requested assistance from the Member with respect to the subject matter of the record.
4. A record in this system of records may be disclosed, as a routine use, to a contractor of the Agency having need for the information in order to perform a contract. Recipients of information shall be required to comply with the requirements of the Privacy Act of 1974, as amended, pursuant to 5 U.S.C. 552a(m).
5. A record related to an International Application filed under the Patent Cooperation Treaty in this system of records may be disclosed, as a routine use, to the International Bureau of the World Intellectual Property Organization, pursuant to the Patent Cooperation Treaty.
6. A record in this system of records may be disclosed, as a routine use, to another federal agency for purposes of National Security review (35 U.S.C. 181) and for review pursuant to the Atomic Energy Act (42 U.S.C. 218(c)).
7. A record from this system of records may be disclosed, as a routine use, to the Administrator, General Services, or his/her designee, during an inspection of records conducted by GSA as part of that agency's responsibility to recommend improvements in records management practices and programs, under authority of 44 U.S.C. 2904 and 2906. Such disclosure shall be made in accordance with the GSA regulations governing inspection of records for this purpose, and any other relevant (*i.e.*, GSA or Commerce) directive. Such disclosure shall not be used to make determinations about individuals.
8. A record from this system of records may be disclosed, as a routine use, to the public after either publication of the application pursuant to 35 U.S.C. 122(b) or issuance of a patent pursuant to 35 U.S.C. 151. Further, a record may be disclosed, subject to the limitations of 37 CFR 1.14, as a routine use, to the public if the record was filed in an application which became abandoned or in which the proceedings were terminated and which application is referenced by either a published application, an application open to public inspection or an issued patent.
9. A record from this system of records may be disclosed, as a routine use, to a Federal, State, or local law enforcement agency, if the USPTO becomes aware of a violation or potential violation of law or regulation.

UNITED STATES PATENT AND TRADEMARK OFFICE

UNITED STATES DEPARTMENT OF COMMERCE
United States Patent and Trademark Office
Address: COMMISSIONER FOR PATENTS
P.O. Box 1450
Alexandria, Virginia 22313-1450
www.uspto.gov

APPLICATION NO.	FILING DATE	FIRST NAMED INVENTOR	ATTORNEY DOCKET NO.	CONFIRMATION NO.
13/026,034	02/11/2011	Fredrick D. CURTIS	2010-IP-029060 US	3975

49431 7590 05/05/2011
SMITH IP SERVICES, P.C.
P.O. Box 997
Rockwall, TX 75087

EXAMINER

ART UNIT	PAPER NUMBER
3674	

NOTIFICATION DATE	DELIVERY MODE
05/05/2011	ELECTRONIC

Please find below and/or attached an Office communication concerning this application or proceeding.

The time period for reply, if any, is set in the attached communication.

Notice of the Office communication was sent electronically on above-indicated "Notification Date" to the following e-mail address(es):

sally@smithipservices.com
mail@smithipservices.com
scrawford@smithipservices.com

UNITED STATES PATENT AND TRADEMARK OFFICE

MAY 4 2011

Commissioner for Patents
United States Patent and Trademark Office
P.O. Box 1450
Alexandria, VA 22313-1450
www.uspto.gov

SMITH IP SERVICES, P.C.
P.O. Box 997
Rockwall TX 75087

In re application of Curtis et al. Application No. 13/026,034 Filed: February 11, 2011 For: PRESSURE CONTROL DEVICE WITH REMOTE ORIENTATION RELATIVE TO A RIG	:	**DECISION ON REQUEST TO PARTICIPATE IN PATENT PROSECUTION HIGHWAY PROGRAM AND PETITION TO MAKE SPECIAL UNDER 37 CFR 1.102(a)**

This is a decision on the request to participate in the Patent Prosecution Highway (PPH) program and the petition under 37 CFR 1.102(a), filed March 24, 2011 to make the above-identified application special.

The request and petition are **GRANTED**.

A grantable request to participate in the PPH program and petition to make special require:

(1) The U.S. application must disclose an eligible relationship to one or more PCT applications filed in the KIPO or USPTO;
(2) Applicant must submit a copy of the allowable/patentable claim(s) from the PCT application(s) latest international work product (the written opinion or the IPER) along with an English translation thereof and a statement that the English translation is accurate;
(3) All the claims in the U.S. application must sufficiently correspond or be amended to sufficiently correspond to the allowable/patentable claim(s) in the PCT application(s);
(4) Examination of the U.S. application has not begun;
(5) Applicant must submit a copy of the latest international work product from the PCT application containing the allowable/patentable claim(s) along with an English translation thereof and a statement that the English translation is accurate;
(6) Applicant must submit an IDS listing the documents cited by the PCT examiner in the international work product along with copies of documents except U.S. patents or U.S. patent application publications.

In light of the petition being properly submitted via EFS-Web as is required, the request to participate in the PPH program complies with the above requirements, the above-identified application has been accorded "special" status.

All other inquiries concerning the examination or status of the application should be directed to the Patent Application Information Retrieval (PAIR) system.

The application is being forwarded to the examiner for action on the merits commensurate with this decision as soon as any pre-exam processing has been completed.

Any inquiry regarding this decision should be directed to Mikado Buiz, Quality Assurance Specialist, at (571) 272-6578.

/ Mikado Buiz /

Mikado Buiz,
Quality Assurance Specialist
Technology Center 3600

MB/MB: 05/03/11

UNITED STATES PATENT AND TRADEMARK OFFICE

Commissioner for Patents
United States Patent and Trademark Office
P.O. Box 1450
Alexandria, VA 22313-1450
www.uspto.gov

PATTERSON & SHERIDAN,
LLP - - APPM/TX
3040 POST OAK BOULEVARD, SUITE 1500
HOUSTON TX 77056

MAILED
MAY 2 6 2011
OFFICE OF PETITIONS

In re Application of :
Yang, et al. : DECISION ON PETITION
Application No. 13/026,038 :
Filed/Deposited: 8 October, 2010 :
Attorney Docket No. 014877/AEP/LES/ESONG :

This is a decision on the petition filed on 26 April, 2011, pursuant to 37 C.F.R. §1.47.

The petition as considered under 37 C.F.R. §1.47(a) is **GRANTED**.

A grantable petition pursuant to 37 C.F.R. §1.47(a) requires: (1) petition and fee; (2) proof that the non-signing inventor cannot be reached or refuses to sign the oath or declaration after having been presented with the application papers (specification: description, claims and drawings); (3) an acceptable oath or declaration in compliance with 35 U.S.C. §§ 115 and 116; and (4) a statement of the last known address of the non-signing inventor(s)—with diligence in the effort to ascertain the validity of the address set forth as the reasonably believed to be last known/current/valid address.

Petitioners always are reminded that for transmission by Email of any document to be accepted by the Office, written acknowledgment of receipt and readability of the message and all applicable attachments of required materials must be provided.

BACKGROUND

The record reflects as follows:

The application was deposited on 11 February, 2011, without, *inter alia*, a fully executed oath/declaration

On 28 February, 2011, the Office mailed a Notice of Missing Parts requiring, *inter alia*, a fully executed oath/declaration.

On 26 April, 2011, Petitioner Keith M. Tackett (Reg. No. 32,008) filed, *inter alia*, a request and fee for extension of time, a petition and fee pursuant to the regulations at 37 C.F.R. §1.47, a statement of facts an oath/declaration executed by Mr. Yang and Mr. Anapolsky for themselves and on behalf of the non-signing inventor Eric H. Liu (Mr. Liu), made a showing that the entire application (description, claims, abstract and drawings) were sent to Mr. Liu at his valid/current/reasonably believed to be last known address and he has failed and so constructively refused to sign/join in the oath/declaration. Therefore, it appears that Petitioner provided a showing satisfying the requirements under the Rule to wit: showing/proof that the non-signing inventor actually and/or constructively refused to sign the oath or declaration after having been presented with the application papers (specification: description, claims and drawings); an acceptable oath or declaration in compliance with 35 U.S.C. §§ 115 and 116; and a statement of the last known address of the non-signing inventor(s)—with diligence in the effort to ascertain the validity of the address set forth as the reasonably believed to be last known/current/valid address. Thus, Petitioner sought to satisfy the requirements pursuant to the Rule and the guidance in the Commentary at MPEP §409.03, and §409.03(a) et seq.), and provide a showing that the non-signing inventor could not be found/refused to sign after diligent effort.

The availability of applications and application papers online to applicants/practitioners who diligently associate their Customer Number with the respective application(s) now provides an applicant/practitioner on-demand information as to events/transactions in an application. Thus, now if one wishes to know the progress in and/or status of an application or the accuracy of the data therein, one need only look at the file online.

Out of an abundance of caution, Petitioners always are reminded that those registered to practice *and* all others who make representations before the Office must inquire into the underlying facts of representations made to the Office and support averments with the appropriate documentation–since all owe to the Office the continuing duty to disclose.[1]

CONCLUSION

The instant petition under 37 C.F.R. §1.47(a) is **granted** (status is accorded pursuant to 37 C.F.R. §1.47(a).)

[1] See supplement of 17 June, 1999. The Patent and Trademark Office is relying on petitioner's duty of candor and good faith and accepting a statement made by Petitioner. See Changes to Patent Practice and Procedure, 62 Fed. Reg. at 53160 and 53178, 1203 Off. Gaz. Pat. Office at 88 and 103 (responses to comments 64 and 109)(applicant obligated under 37 C.F.R. §10.18 to inquire into the underlying facts and circumstances when providing statements to the Patent and Trademark Office). See specifically, the regulations at 37 C.F.R. §10.18.

As provided in 37 C.F.R. §1.47(c), this Office will forward notice of this application's filing to the non-signing inventors at the addresses given in the petition. Notice of the filing of this application will also be published in the Official Gazette.

The instant application is released to the Office of Patent Application Processing (OPAP) for such processing as required in due course.

Telephone inquiries regarding this decision may be directed to the undersigned at (571) 272-3214—it is noted, however, that all practice before the Office is in writing (see: 37 C.F.R. §1.2[2]) and the proper authority for action on any matter in this regard are the statutes (35 U.S.C.), regulations (37 C.F.R.) and the commentary on policy (MPEP). Therefore, no telephone discussion may be controlling or considered authority for Petitioner's action(s).

/John J. Gillon, Jr./
John J. Gillon, Jr.
Senior Attorney
Office of Petitions

[2] The regulations at 37 C.F.R. §1.2 provide:
§1.2 Business to be transacted in writing.
All business with the Patent and Trademark Office should be transacted in writing. The personal attendance of applicants or their attorneys or agents at the Patent and Trademark Office is unnecessary. The action of the Patent and Trademark Office will be based exclusively on the written record in the Office. No attention will be paid to any alleged oral promise, stipulation, or understanding in relation to which there is disagreement or doubt

UNITED STATES PATENT AND TRADEMARK OFFICE

Commissioner for Patents
United States Patent and Trademark Office
P.O. Box 1450
Alexandria, VA 22313-1450
www.uspto.gov

ERIC H. LIU
355 N. WOLFE ROAD/APT. 138
SUNNYVALE, CA 94086

MAILED
MAY 26 2011
OFFICE OF PETITIONS

In re Application of	:	
Yang, et al.	:	COMMUNICATION
Application No. 13/026,038	:	
Filed/Deposited: 8 October, 2010	:	
Attorney Docket No. 014877/AEP/LES/ESONG	:	

Dear Eric H. Liu:

You are named as an inventor in the above-identified United States patent application, filed under the provisions of 35 U.S.C. §116 (United States Code), and 37 C.F.R. §1.47 (Code of Federal Regulations), Rules of Practice in Patent Cases. Should a patent be granted on the application you will be designated therein as an inventor.

As a named inventor you are entitled to inspect any paper in the file wrapper of the application, order copies of all or any part thereof (at a prepaid cost per 37 C.F.R. §1.19) or make your position of record in the application. Alternatively, you may arrange to do any of the preceding through a registered patent attorney or agent presenting written authorization from you. If you care to join the application, counsel of record (see below) would presumably assist you. Joining the application would entail the filing of an appropriate oath or declaration by you pursuant to 37 C.F.R. §1.63.

Should you elect to join in the application, the contact information for Counsel of Record is set forth at the end of this Communication.

Should you seek to identify independent Counsel, you may find the Patent Attorneys/Agents Search engine of assistance (https://oedci.uspto.gov/OEDCI/).

Requests for information regarding your application should be directed to the File Information Unit at (703) 308-2733. Information regarding how to pay for and order a copy of the application, or a specific paper in the application, should be directed to the Certification Division at (571) 272-3150 or 1 (800) 972-6382 (outside the Washington, DC area).

Telephone inquiries regarding this communication may be directed to the undersigned at (571) 272-3214—it is noted, however, that all practice before the Office is in writing (see: 37 C.F.R. §1.2[1]) and the proper authority for action on any matter in this regard are the statutes (35 U.S.C.), regulations (37 C.F.R.) and the commentary on policy (MPEP). Therefore, no telephone discussion may be controlling or considered authority for Petitioner's/your action(s) and/or inactions. Moreover, the Office can neither advise you nor recommend Counsel in this matter.

/John J. Gillon, Jr./
John J. Gillon, Jr.
Senior Attorney
Office of Petitions

Counsel of Record:
PATTERSON & SHERIDAN,
LLP - - APPM/TX
3040 POST OAK BOULEVARD, SUITE 1500
HOUSTON TX 77056

[1] The regulations at 37 C.F.R. §1.2 provide:
§1.2 Business to be transacted in writing.
All business with the Patent and Trademark Office should be transacted in writing. The personal attendance of applicants or their attorneys or agents at the Patent and Trademark Office is unnecessary. The action of the Patent and Trademark Office will be based exclusively on the written record in the Office. No attention will be paid to any alleged oral promise, stipulation, or understanding in relation to which there is disagreement or doubt

Doc Code: PET.AUTO **Document Description: Petition automatically granted by EFS-Web**	PTO/SB/83 U.S. Patent and Trademark Office Department of Commerce

Electronic Petition Request	**REQUEST FOR WITHDRAWAL AS ATTORNEY OR AGENT AND CHANGE OF CORRESPONDENCE ADDRESS**
Application Number	13026041
Filing Date	11-Feb-2011
First Named Inventor	Douglas SUTTON
Art Unit	3735
Examiner Name	
Attorney Docket Number	645232000500
Title	BRACHYTHERAPY APPLICATOR

◉ Please withdraw me as attorney or agent for the above identified patent application and the practitioners of record associated with Customer Number: 25226

The reason(s) for this request are those described in 37 CFR:

10.40(b)(4)

Certifications

☒ I/We have given reasonable notice to the client, prior to the expiration of the response period, that the practitioner(s) intend to withdraw from employment

☒ I/We have delivered to the client or a duly authorized representative of the client all papers and property (including funds) to which the client is entitled

☒ I/We have notified the client of any responses that may be due and the time frame within which the client must respond

Change the correspondence address and direct all future correspondence to the first named inventor or assignee that has properly made itself of record pursuant to 37 CFR 3.71:

Name	VivaRay, Inc.
Address	3264 Alpine Rd
City	Portola Valley
State	CA
Postal Code	94028
Country	US

I am authorized to sign on behalf of myself and all withdrawing practitioners.	
Signature	/Mika Mayer/
Name	Mika Mayer
Registration Number	47777

UNITED STATES PATENT AND TRADEMARK OFFICE

Commissioner for Patents
United States Patent and Trademark Office
P.O. Box 1450
Alexandria, VA 22313-1450
www.uspto.gov

Decision Date : September 8,2011

In re Application of :

Douglas SUTTON

Application No : 13026041

Filed : 11-Feb-2011

Attorney Docket No : 645232000500

DECISION ON REQUEST TO WITHDRAW AS ATTORNEY/AGENTOF RECORD

This is an electronic decision on the Request to Withdraw as attorney or agent of record under 37 CFR § 1.36(b), filed September 8,2011

The request is **APPROVED.**

The request was signed by Mika Mayer (registration no. 47777) on behalf of all attorneys/agents associated with Customer Number 25226 . All attorneys/agents associated with Cusotmer Number 25226 have been withdrawn.

Since there are no remaining attorneys of record, all future communications from the Office will be directed to the first named inventor or assignee that has properly made itself of record pursuant to 37 CFR 3.71, with correspondence address:

Name	VivaRay, Inc.
Name2	
Address 1	3264 Alpine Rd
Address 2	
City	Portola Valley
State	CA
Postal Code	94028
Country	US

As a reminder, requester is required to inform the first named inventor or assignee that has properly made itself of record pursuant to 37 CFR 3.71 of the electronically processed petition.

Telephone inquiries concerning this decision should be directed to the Patent Electronic Business Center (EBC) at 866-217-9197.

Office of Petitions

PTO/SB/20PCT-KR (06-10)
Approved for use through 01/31/2015. OMB 0651-0058
U.S. Patent and Trademark Office; U.S DEPARTMENT OF COMMERCE
Under the Paperwork Reduction Act of 1995, no persons are required to respond to a collection of information unless it displays a valid OMB control number.

REQUEST FOR PARTICIPATION IN THE PATENT COOPERATION TREATY – PATENT PROSECUTION HIGHWAY (PCT-PPH) PILOT PROGRAM BETWEEN THE KOREAN INTELLECTUAL PROPERTY OFFICE (KIPO) AND THE USPTO

Application No.:	13/026,060	First Named Inventor:	Mark Edward Kanode
Filing Date:	02/11/2011	Attorney Docket No.:	1322/399/5
Title of the Invention:	METHODS, SYSTEMS, AND COMPUTER READABLE MEDIA FOR PROVIDING PRIORITY ROUTING AT A DIAMETER NODE		

THIS REQUEST FOR PARTICIPATION IN THE PCT-PPH PILOT PROGRAM ALONG WITH THE REQUIRED DOCUMENTS MUST BE SUBMITTED VIA EFS-WEB. INFORMATION REGARDING EFS-WEB IS AVAILABLE AT HTTP://WWW.USPTO.GOV/EBC/EFS_HELP.HTML.

APPLICANT HEREBY REQUESTS PARTICIPATION IN THE PCT-PPH PILOT PROGRAM AND PETITIONS TO MAKE THE ABOVE-IDENTIFIED APPLICATION SPECIAL UNDER THE PCT-PPH PILOT PROGRAM.

The above-identified application is (1) a national stage entry of the corresponding PCT application, or (2) a national stage entry of another PCT application which claims priority to the corresponding PCT application, or (3) a national application that claims domestic/ foreign priority to the corresponding PCT application, or (4) a national application which forms the basis for the priority claim in the corresponding PCT application, or (5) a continuing application of a U.S. application that satisfies one of (1) to (4) above, or (6) a U.S. application that claims domestic benefit to a U.S. provisional application which forms the basis for the priority claim in the corresponding PCT application.

The corresponding PCT application number(s) is/are: PCT/US2011/024611

The international filing date of the corresponding PCT application(s) is/are: 02/11/2011

I. List of Required Documents:

a. **A copy of the latest international work product (WO/ISA, WO/IPEA, or IPER) in the above-identified corresponding PCT application(s)**

☑ is attached.

☐ is not attached because the document is already in the U.S. application.

b. **A copy of all claims which were indicated as having novelty, inventive step and industrial applicability in the above-identified corresponding PCT application(s)**

☑ is attached.

☐ is not attached because the document is already in the U.S. application.

c. **English translations of the documents in a. and b. above are attached (if the documents are not in the English language). A statement that the English translation is accurate is attached for the document in b. above.**

d. **(1) An information disclosure statement listing the documents cited in the international work products (ISR, WO/ISA, WO/IPEA, IPER) of the corresponding PCT application.**

☑ is attached.

☐ has already been filed in the above-identified U.S. application on _____

(2) Copies of all documents (except for U.S. patents or U.S. patent application publications)

☑ are attached.

☐ have already been filed in the above-identified U.S. application on _____

This collection of information is required by 35 U.S.C. 119, 37 CFR 1.55, and 37 CFR 1.102(d). The information is required to obtain or retain a benefit by the public, which is to file (and by the USPTO to process) an application. Confidentiality is governed by 35 U.S.C. 122 and 37 CFR 1.11 and 1.14. This collection is estimated to take 2 hours to complete, including gathering, preparing, and submitting the completed application form to the USPTO. Time will vary depending upon the individual case. Any comments on the amount of time you require to complete this form and/or suggestions for reducing this burden should be sent to the Chief Information Officer, U.S. Patent and Trademark Office, U.S. Department of Commerce, P.O. Box 1450, Alexandria, VA 22313-1450. DO NOT SEND FEES OR COMPLETED FORMS TO THIS ADDRESS.

Under the Paperwork Reduction Act of 1995, no persons are required to respond to a collection of information unless it displays a valid OMB control number.

REQUEST FOR PARTICIPATION IN THE PCT-PPH PILOT PROGRAM BETWEEN THE KIPO AND THE USPTO

(continued)

Application No.:	13/026,060	First Named Inventor:	Mark Edward Kanode

II. Claims Correspondence Table:

Claims in US Application	Patentable Claims in the corresponding PCT application	Explanation regarding the correspondence
1-34	1-34	Exactly the same.

III. All the claims in the US application sufficiently correspond to the patentable claims in the corresponding PCT application.

Signature /Gregory A. Hunt/	Date February 23, 2012
Name (Print/Typed) Gregory A. Hunt	Registration Number 41,085

Privacy Act Statement

The **Privacy Act of 1974 (P.L. 93-579)** requires that you be given certain information in connection with your submission of the attached form related to a patent application or patent. Accordingly, pursuant to the requirements of the Act, please be advised that: (1) the general authority for the collection of this information is 35 U.S.C. 2(b)(2); (2) furnishing of the information solicited is voluntary; and (3) the principal purpose for which the information is used by the U.S. Patent and Trademark Office is to process and/or examine your submission related to a patent application or patent. If you do not furnish the requested information, the U.S. Patent and Trademark Office may not be able to process and/or examine your submission, which may result in termination of proceedings or abandonment of the application or expiration of the patent.

The information provided by you in this form will be subject to the following routine uses:

1. The information on this form will be treated confidentially to the extent allowed under the Freedom of Information Act (5 U.S.C. 552) and the Privacy Act (5 U.S.C 552a). Records from this system of records may be disclosed to the Department of Justice to determine whether disclosure of these records is required by the Freedom of Information Act.
2. A record from this system of records may be disclosed, as a routine use, in the course of presenting evidence to a court, magistrate, or administrative tribunal, including disclosures to opposing counsel in the course of settlement negotiations.
3. A record in this system of records may be disclosed, as a routine use, to a Member of Congress submitting a request involving an individual, to whom the record pertains, when the individual has requested assistance from the Member with respect to the subject matter of the record.
4. A record in this system of records may be disclosed, as a routine use, to a contractor of the Agency having need for the information in order to perform a contract. Recipients of information shall be required to comply with the requirements of the Privacy Act of 1974, as amended, pursuant to 5 U.S.C. 552a(m).
5. A record related to an International Application filed under the Patent Cooperation Treaty in this system of records may be disclosed, as a routine use, to the International Bureau of the World Intellectual Property Organization, pursuant to the Patent Cooperation Treaty.
6. A record in this system of records may be disclosed, as a routine use, to another federal agency for purposes of National Security review (35 U.S.C. 181) and for review pursuant to the Atomic Energy Act (42 U.S.C. 218(c)).
7. A record from this system of records may be disclosed, as a routine use, to the Administrator, General Services, or his/her designee, during an inspection of records conducted by GSA as part of that agency's responsibility to recommend improvements in records management practices and programs, under authority of 44 U.S.C. 2904 and 2906. Such disclosure shall be made in accordance with the GSA regulations governing inspection of records for this purpose, and any other relevant (*i.e.*, GSA or Commerce) directive. Such disclosure shall not be used to make determinations about individuals.
8. A record from this system of records may be disclosed, as a routine use, to the public after either publication of the application pursuant to 35 U.S.C. 122(b) or issuance of a patent pursuant to 35 U.S.C. 151. Further, a record may be disclosed, subject to the limitations of 37 CFR 1.14, as a routine use, to the public if the record was filed in an application which became abandoned or in which the proceedings were terminated and which application is referenced by either a published application, an application open to public inspection or an issued patent.
9. A record from this system of records may be disclosed, as a routine use, to a Federal, State, or local law enforcement agency, if the USPTO becomes aware of a violation or potential violation of law or regulation.

PTO/SB/20PCT-KR (06-10)
Approved for use through 01/31/2015. OMB 0651-0058
U.S. Patent and Trademark Office; U.S DEPARTMENT OF COMMERCE
Under the Paperwork Reduction Act of 1995, no persons are required to respond to a collection of information unless it displays a valid OMB control number.

REQUEST FOR PARTICIPATION IN THE PATENT COOPERATION TREATY – PATENT PROSECUTION HIGHWAY (PCT-PPH) PILOT PROGRAM BETWEEN THE KOREAN INTELLECTUAL PROPERTY OFFICE (KIPO) AND THE USPTO

Application No.:	13/026,076	First Named Inventor:	Jeffrey Alan Craig
Filing Date:	02/11/2011	Attorney Docket No.:	1322/399/6/2
Title of the Invention:	METHODS, SYSTEMS, AND COMPUTER READABLE MEDIA FOR PROVIDING PEER ROUTING AT A DIAMETER NODE		

THIS REQUEST FOR PARTICIPATION IN THE PCT-PPH PILOT PROGRAM ALONG WITH THE REQUIRED DOCUMENTS MUST BE SUBMITTED VIA EFS-WEB. INFORMATION REGARDING EFS-WEB IS AVAILABLE AT HTTP://WWW.USPTO.GOV/EBC/EFS_HELP.HTML.

APPLICANT HEREBY REQUESTS PARTICIPATION IN THE PCT-PPH PILOT PROGRAM AND PETITIONS TO MAKE THE ABOVE-IDENTIFIED APPLICATION SPECIAL UNDER THE PCT-PPH PILOT PROGRAM.

The above-identified application is (1) a national stage entry of the corresponding PCT application, or (2) a national stage entry of another PCT application which claims priority to the corresponding PCT application, or (3) a national application that claims domestic/ foreign priority to the corresponding PCT application, or (4) a national application which forms the basis for the priority claim in the corresponding PCT application, or (5) a continuing application of a U.S. application that satisfies one of (1) to (4) above, or (6) a U.S. application that claims domestic benefit to a U.S. provisional application which forms the basis for the priority claim in the corresponding PCT application.

The corresponding PCT application number(s) is/are: PCT/US2011/024614

The international filing date of the corresponding PCT application(s) is/are: 02/11/2011

I. List of Required Documents:

a. **A copy of the latest international work product (WO/ISA, WO/IPEA, or IPER) in the above-identified corresponding PCT application(s)**

☑ is attached.

☐ is not attached because the document is already in the U.S. application.

b. **A copy of all claims which were indicated as having novelty, inventive step and industrial applicability in the above-identified corresponding PCT application(s)**

☑ is attached.

☐ is not attached because the document is already in the U.S. application.

c. **English translations of the documents in a. and b. above are attached (if the documents are not in the English language). A statement that the English translation is accurate is attached for the document in b. above.**

d. **(1) An information disclosure statement listing the documents cited in the international work products (ISR, WO/ISA, WO/IPEA, IPER) of the corresponding PCT application.**

☑ is attached.

☐ has already been filed in the above-identified U.S. application on _____

(2) Copies of all documents (except for U.S. patents or U.S. patent application publications)

☑ are attached.

☐ have already been filed in the above-identified U.S. application on _____

This collection of information is required by 35 U.S.C. 119, 37 CFR 1.55, and 37 CFR 1.102(d). The information is required to obtain or retain a benefit by the public, which is to file (and by the USPTO to process) an application. Confidentiality is governed by 35 U.S.C. 122 and 37 CFR 1.11 and 1.14. This collection is estimated to take 2 hours to complete, including gathering, preparing, and submitting the completed application form to the USPTO. Time will vary depending upon the individual case. Any comments on the amount of time you require to complete this form and/or suggestions for reducing this burden should be sent to the Chief Information Officer, U.S. Patent and Trademark Office, U.S. Department of Commerce, P.O. Box 1450, Alexandria, VA 22313-1450. DO NOT SEND FEES OR COMPLETED FORMS TO THIS ADDRESS.

Under the Paperwork Reduction Act of 1995, no persons are required to respond to a collection of information unless it displays a valid OMB control number.

REQUEST FOR PARTICIPATION IN THE PCT-PPH PILOT PROGRAM BETWEEN THE KIPO AND THE USPTO

(continued)

Application No.:	13/026,076	First Named Inventor:	Jeffrey Alan Craig

II. Claims Correspondence Table:

Claims in US Application	Patentable Claims in the corresponding PCT application	Explanation regarding the correspondence
1-28	1-28	Exactly the same.

III. All the claims in the US application sufficiently correspond to the patentable claims in the corresponding PCT application.

Signature /Gregory A. Hunt/	Date February 24, 2012
Name (Print/Typed) Gregory A. Hunt	Registration Number 41,085

Privacy Act Statement

The **Privacy Act of 1974 (P.L. 93-579)** requires that you be given certain information in connection with your submission of the attached form related to a patent application or patent. Accordingly, pursuant to the requirements of the Act, please be advised that: (1) the general authority for the collection of this information is 35 U.S.C. 2(b)(2); (2) furnishing of the information solicited is voluntary; and (3) the principal purpose for which the information is used by the U.S. Patent and Trademark Office is to process and/or examine your submission related to a patent application or patent. If you do not furnish the requested information, the U.S. Patent and Trademark Office may not be able to process and/or examine your submission, which may result in termination of proceedings or abandonment of the application or expiration of the patent.

The information provided by you in this form will be subject to the following routine uses:

1. The information on this form will be treated confidentially to the extent allowed under the Freedom of Information Act (5 U.S.C. 552) and the Privacy Act (5 U.S.C 552a). Records from this system of records may be disclosed to the Department of Justice to determine whether disclosure of these records is required by the Freedom of Information Act.
2. A record from this system of records may be disclosed, as a routine use, in the course of presenting evidence to a court, magistrate, or administrative tribunal, including disclosures to opposing counsel in the course of settlement negotiations.
3. A record in this system of records may be disclosed, as a routine use, to a Member of Congress submitting a request involving an individual, to whom the record pertains, when the individual has requested assistance from the Member with respect to the subject matter of the record.
4. A record in this system of records may be disclosed, as a routine use, to a contractor of the Agency having need for the information in order to perform a contract. Recipients of information shall be required to comply with the requirements of the Privacy Act of 1974, as amended, pursuant to 5 U.S.C. 552a(m).
5. A record related to an International Application filed under the Patent Cooperation Treaty in this system of records may be disclosed, as a routine use, to the International Bureau of the World Intellectual Property Organization, pursuant to the Patent Cooperation Treaty.
6. A record in this system of records may be disclosed, as a routine use, to another federal agency for purposes of National Security review (35 U.S.C. 181) and for review pursuant to the Atomic Energy Act (42 U.S.C. 218(c)).
7. A record from this system of records may be disclosed, as a routine use, to the Administrator, General Services, or his/her designee, during an inspection of records conducted by GSA as part of that agency's responsibility to recommend improvements in records management practices and programs, under authority of 44 U.S.C. 2904 and 2906. Such disclosure shall be made in accordance with the GSA regulations governing inspection of records for this purpose, and any other relevant (*i.e.*, GSA or Commerce) directive. Such disclosure shall not be used to make determinations about individuals.
8. A record from this system of records may be disclosed, as a routine use, to the public after either publication of the application pursuant to 35 U.S.C. 122(b) or issuance of a patent pursuant to 35 U.S.C. 151. Further, a record may be disclosed, subject to the limitations of 37 CFR 1.14, as a routine use, to the public if the record was filed in an application which became abandoned or in which the proceedings were terminated and which application is referenced by either a published application, an application open to public inspection or an issued patent.
9. A record from this system of records may be disclosed, as a routine use, to a Federal, State, or local law enforcement agency, if the USPTO becomes aware of a violation or potential violation of law or regulation.

Doc Code: PET.GREEN
Document Description: Petition for Green Tech Pilot

PTO/SB/420 (11-10)
Approved for use through 01/31/2011. OMB 0651-0062
U.S. Patent and Trademark Office; U. S. DEPARTMENT OF COMMERCE
Under the Paperwork Reduction Act of 1995, no persons are required to respond to a collection of information unless it displays a valid OMB control number.

PETITION TO MAKE SPECIAL UNDER THE GREEN TECHNOLOGY PILOT PROGRAM

Attorney Docket Number: BETC-01ORD	Application Number (if known): 13026094	Filing date: 02/11/2011
First Named Inventor: Correa		
Title: Organic Water Retention Mix for Use on Soil		

APPLICANT HEREBY REQUESTS TO PARTICIPATE IN THE GREEN TECHNOLOGY PILOT PROGRAM FOR THE ABOVE-IDENTIFIED APPLICATION. See Instruction Sheet on page 2.

This petition must be timely filed electronically using the USPTO electronic filing system, EFS-Web.

1. By filing this petition:

   Applicant is requesting early publication: Applicant hereby requests early publication under 37 CFR 1.219 and the publication fee set forth in 37 CFR 1.18(d) accompanies this request.

2. By filing this petition: applicant is agreeing to make an election without traverse in a telephonic interview and elect an invention that meets the eligibility requirements for the Green Technology Pilot Program, if the Office determines that the claims are not obviously directed to a single invention. See Instruction Sheet.

3. This request is accompanied by statements of special status for the eligibility requirement.

4. The application contains no more than three (3) independent claims and twenty (20) total claims.

5. The application does not contain any multiple dependent claims.

6. Other attachments: Statement of Special Status for Eligibility

Signature /barbarajluther/	Date 03/16/2011
Name (Print/Typed) Barbara J. Luther	Registration Number 33954

Note: *Signatures of all the inventors or assignees of record of the entire interest or their representative(s) are required in accordance with 37 CFR 1.33 and 11.18. Please see 37 CFR 1.4(d) for the form of the signature. If necessary, submit multiple forms for more than one signature see below*.*

☐ *Total of 1 forms are submitted.

The information is required to obtain or retain a benefit by the public which is to file (and by the USPTO to process) an application. Confidentiality is governed by 35 U.S.C. 122 and 37 CFR 1.11 and 1.14. This collection is estimated to take 12 hours to complete, including gathering, preparing, and submitting the completed application form to the USPTO. Time will vary depending upon the individual case. Any comments on the amount of time you require to complete this form and/or suggestions for reducing this burden, should be sent to the Chief Information Officer, U.S. Patent and Trademark Office, U.S. Department of Commerce, P.O. Box 1450, Alexandria, VA 22313-1450. DO NOT SEND FEES OR COMPLETED FORMS TO THIS ADDRESS. **SEND TO: Commissioner for Patents, P.O. Box 1450, Alexandria, VA 22313-1450.**

If you need assistance in completing the form, call 1-800-PTO-9199 and select option 2.

Under the Paperwork Reduction Act of 1995, no persons are required to respond to a collection of information unless it displays a valid OMB control number.

Instruction Sheet for Petition to Make Special Under the Green Technology Pilot Program

(Not to be Submitted to the USPTO)

The following is a summary of the requirements (for more information see the notices (i) "Pilot Program for Green Technologies Including Greenhouse Gas Reduction," (ii) "Elimination of Classification Requirement in the Green Technology Pilot Program," and (iii) "Expansion and Extension of the Green Technology Pilot Program," available on the USPTO web site at http://www.uspto.gov/patents/init_events/green_tech.jsp):

1) The application must be a non-reissue, non-provisional utility application filed under 35 U.S.C. 111 (a), or an international application that has entered the national stage in compliance with 35 U.S.C. 371, irrespective of the filing date of the application. Reexamination proceedings are excluded from this pilot program.

2) The application must contain three or fewer independent claims and twenty or fewer total claims. The application must not contain any multiple dependent claims. For an application that contains more than three independent claims or twenty total claims, or multiple dependent claims, applicant must file a preliminary amendment in compliance with 37 CFR 1.121 to cancel the excess claims and/or the multiple dependent claims at the time the petition to make special is filed.

3) The claims must be directed to a single invention that materially enhances the quality of the environment, or that materially contributes to: (1) the discovery or development of renewable energy resources; (2) the more efficient utilization and conservation of energy resources; or (3) green house gas emission reduction (see the eligibility requirements of sections II and III of the notice (i) cited above). The petition must include a statement that, if the USPTO determines that the claims are directed to multiple inventions (e.g., in a restriction requirement), applicant will agree to make an election without traverse in a telephonic interview, and elect an invention that meets the eligibility requirements in section II or III of the notice (i) cited above.

4) The petition to make special must be timely filed electronically using the USPTO electronic filing system, EFS-Web, and selecting the document description of "Petition for Green Tech Pilot" on the EFS-Web screen. Applicant should use form PTO/SB/420, which is available as a Portable Document Format (PDF) fillable form in EFS-Web and on the USPTO Web site.

5) The petition to make special must be filed at least one day prior to the date that a first Office action (which may be an Office action containing only a restriction requirement) appears in the Patent Application Information Retrieval (PAIR) system. Applicant may check the status of the application using PAIR.

6) The petition to make special must be accompanied by a request for early publication in compliance with 37 CFR 1.219 and the publication fee set forth in 37 CFR 1.18(d).

Privacy Act Statement

The **Privacy Act of 1974 (P.L. 93-579)** requires that you be given certain information in connection with your submission of the attached form related to a patent application or patent. Accordingly, pursuant to the requirements of the Act, please be advised that: (1) the general authority for the collection of this information is 35 U.S.C. 2(b)(2); (2) furnishing of the information solicited is voluntary; and (3) the principal purpose for which the information is used by the U.S. Patent and Trademark Office is to process and/or examine your submission related to a patent application or patent. If you do not furnish the requested information, the U.S. Patent and Trademark Office may not be able to process and/or examine your submission, which may result in termination of proceedings or abandonment of the application or expiration of the patent.

The information provided by you in this form will be subject to the following routine uses:

1. The information on this form will be treated confidentially to the extent allowed under the Freedom of Information Act (5 U.S.C. 552) and the Privacy Act (5 U.S.C 552a). Records from this system of records may be disclosed to the Department of Justice to determine whether disclosure of these records is required by the Freedom of Information Act.
2. A record from this system of records may be disclosed, as a routine use, in the course of presenting evidence to a court, magistrate, or administrative tribunal, including disclosures to opposing counsel in the course of settlement negotiations.
3. A record in this system of records may be disclosed, as a routine use, to a Member of Congress submitting a request involving an individual, to whom the record pertains, when the individual has requested assistance from the Member with respect to the subject matter of the record.
4. A record in this system of records may be disclosed, as a routine use, to a contractor of the Agency having need for the information in order to perform a contract. Recipients of information shall be required to comply with the requirements of the Privacy Act of 1974, as amended, pursuant to 5 U.S.C. 552a(m).
5. A record related to an International Application filed under the Patent Cooperation Treaty in this system of records may be disclosed, as a routine use, to the International Bureau of the World Intellectual Property Organization, pursuant to the Patent Cooperation Treaty.
6. A record in this system of records may be disclosed, as a routine use, to another federal agency for purposes of National Security review (35 U.S.C. 181) and for review pursuant to the Atomic Energy Act (42 U.S.C. 218(c)).
7. A record from this system of records may be disclosed, as a routine use, to the Administrator, General Services, or his/her designee, during an inspection of records conducted by GSA as part of that agency's responsibility to recommend improvements in records management practices and programs, under authority of 44 U.S.C. 2904 and 2906. Such disclosure shall be made in accordance with the GSA regulations governing inspection of records for this purpose, and any other relevant (*i.e.*, GSA or Commerce) directive. Such disclosure shall not be used to make determinations about individuals.
8. A record from this system of records may be disclosed, as a routine use, to the public after either publication of the application pursuant to 35 U.S.C. 122(b) or issuance of a patent pursuant to 35 U.S.C. 151. Further, a record may be disclosed, subject to the limitations of 37 CFR 1.14, as a routine use, to the public if the record was filed in an application which became abandoned or in which the proceedings were terminated and which application is referenced by either a published application, an application open to public inspection or an issued patent.
9. A record from this system of records may be disclosed, as a routine use, to a Federal, State, or local law enforcement agency, if the USPTO becomes aware of a violation or potential violation of law or regulation.

IN THE UNITED STATES PATENT AND TRADEMARK OFFICE

Applicant:	Correa	Examiner:	Unknown
Docket No.:	BETC-01ORD	Serial No.:	13/026,094
Filed:	February 11, 2011	Group Art Unit:	1736
Title:	Organic Water Retention Mix for Use on Soil		

PETITION TO MAKE SPECIAL UNDER THE GREEN TECHNOLOGY PILOT PROGRAM

STATEMENT OF SPECIAL STATUS FOR ELIGIBILITY

Office of Petitions
Commissioner for Patents
P.O. Box 1450
Alexandria, VA 22313-1450

Dear Sir or Madam:

This Statement is being submitted with form SB420, the Petition to Make Special Under the Green Technology Pilot Program. Following are reasons that the invention of the above-captioned patent application materially enhances the quality of the environment by contributing to the restoration or maintenance of the basic life-sustaining natural elements.

1. The present invention provides a combination of materials that together are highly absorbent of water. The combination can be used on arid land, where the inventive combination retains a large percentage of water humidity on the soil for a long period of time. This reduces the amount of water needed for irrigation on farming soil, or green areas in parks or recreation facilities. Reducing the amount of water used for irrigation in arid lands of the country has an important impact on the environment. Considering that close to 70% of water in the United States is used for irrigation, this inventive combination can help in the reduction of this consumption.

2. The present invention provides a use for organic, industrial waste products, including sawdust, paper pulp waste or sludge and manure, that otherwise would go to landfill where these wastes accumulate and cause the landfill to expand and

use up otherwise arable land. Thus, this invention helps maintain the supply of usable land and reduces the amount of organic industrial waste that is sent to landfills.

If the Office of Petitions has any questions that can be resolved with a telephone call, the Office is respectfully requested to telephone the undersigned at 480-766-8064.

Respectfully yours,

By /barbarajluther/
Barbara J. Luther
Reg. No. 33,954

Customer Number: 51951
The Luther Law Firm, PLC
10575 N 114th St., Suite 103
Scottsdale, AZ 85259

UNITED STATES PATENT AND TRADEMARK OFFICE

UNITED STATES DEPARTMENT OF COMMERCE
United States Patent and Trademark Office
Address: COMMISSIONER FOR PATENTS
P.O. Box 1450
Alexandria, Virginia 22313-1450
www.uspto.gov

APPLICATION NO.	FILING DATE	FIRST NAMED INVENTOR	ATTORNEY DOCKET NO.	CONFIRMATION NO.
13/026,094	02/11/2011	Hector Luis Correa Delgado	BETC-01ORD	4112

51951 7590 05/03/2011
THE LUTHER LAW FIRM, PLC
10575 N 114TH STREET
SUITE 103
SCOTTSDALE, AZ 85259

EXAMINER

ART UNIT	PAPER NUMBER
1761	

NOTIFICATION DATE	DELIVERY MODE
05/03/2011	ELECTRONIC

Please find below and/or attached an Office communication concerning this application or proceeding.

The time period for reply, if any, is set in the attached communication.

Notice of the Office communication was sent electronically on above-indicated "Notification Date" to the following e-mail address(es):

INFO@THELUTHERLAWFIRM.COM
bjl@thelutherlawfirm.com

UNITED STATES PATENT AND TRADEMARK OFFICE

Commissioner for Patents
United States Patent and Trademark Office
P.O. Box 1450
Alexandria, VA 22313-1450
www.uspto.gov

5/3/11

THE LUTHER LAW FIRM, PLC
10575 N 114TH STREET
SUITE 103
SCOTTSDALE AZ 85259

In re Application of	:	
Correa Delgado et al.	:	DECISION ON PETITION
Application No. 13/026,094	:	TO MAKE SPECIAL UNDER
Filed: 2/11/2011	:	THE GREEN TECHNOLOGY
Attorney Docket No. **BETC-01ORD**	:	PILOT PROGRAM

This is a decision on the petition under 37 CFR 1.102, filed 3/16/2011, to make the above-identified application special under the pilot program for applications pertaining to Green Technologies as set forth in 74 Federal Register Notice 64666 (December 8, 2009) and amended by 75 Federal Register Notice 28554 (May 21, 2010) and 75 Federal Register Notice 69049 (November 10, 2010).

The petition is **GRANTED**.

A grantable petition to make an application special under 37 CFR 1.102 and the pilot program as set forth in 74 FR 64666 must be directed to a nonprovisional application filed under 35 USC 111(a) or be a national stage entry under 35 USC 371, exclusive of any reissue applications.

In order to qualify for special status, the following requirements must be met. 1) The application must have no more than 3 independent claims and no more than 20 total claims. 2) The application must not contain any multiple dependent claims. 3) The petition must state the basis for seeking special status, i.e., the claimed invention either: A) materially enhances the quality of the environment or B) materially contributes to: i) the discovery or development of renewable energy resources, ii) the more efficient utilization and conservation of energy resources, or iii) greenhouse gas emission reduction. 4) If the disclosure is not clear on its face that the claimed invention materially contributes under category (A) or (B), the petition must be accompanied by a statement by the applicant, assignee, or an attorney/agent registered to practice before the Office explaining how the materiality standard is met. 5) A statement that applicant will agree to make an election without traverse in a telephonic interview if a restriction requirement is made by the examiner. 6) The petition to make special must be filed electronically. 7) The petition must be filed at least one day prior to the date that a first Office Action appears in the Patent Application Information Retrieval (PAIR) system. 8) The petition must be accompanied by a

request for early publication in compliance with 37 CFR 1.219 and include the publication fee as set forth in 37 CFR 1.18(d).

The requirement for a fee for consideration of the petition to make special for applications pertaining to Green Technologies has been waived.

The instant petition complies with items 1 – 8 above. Accordingly, the above-identified application has been accorded "special" status.

Telephone inquires concerning this decision should be directed to Tom Dunn at 571-272-1171.

The application is being forwarded to the Technology Center Art Unit 1761 for action on the merits commensurate with this decision.

/Tom Dunn/

Tom Dunn
Quality Assurance Specialist
Technology Center 1700

PTO/SB/20PCT-KR (06-10)
Approved for use through 01/31/2015. OMB 0651-0058
U.S. Patent and Trademark Office; U.S DEPARTMENT OF COMMERCE
Under the Paperwork Reduction Act of 1995, no persons are required to respond to a collection of information unless it displays a valid OMB control number.

REQUEST FOR PARTICIPATION IN THE PATENT COOPERATION TREATY – PATENT PROSECUTION HIGHWAY (PCT-PPH) PILOT PROGRAM BETWEEN THE KOREAN INTELLECTUAL PROPERTY OFFICE (KIPO) AND THE USPTO

Application No.:	13/026,098	First Named Inventor:	Jeffrey Alan Craig
Filing Date:	02/11/2011	Attorney Docket No.:	1322/399/8
Title of the Invention:	METHODS, SYSTEMS, AND COMPUTER READABLE MEDIA FOR PROVIDING LOCAL APPLICATION ROUTING AT A DIAMETER NODE		

THIS REQUEST FOR PARTICIPATION IN THE PCT-PPH PILOT PROGRAM ALONG WITH THE REQUIRED DOCUMENTS MUST BE SUBMITTED VIA EFS-WEB. INFORMATION REGARDING EFS-WEB IS AVAILABLE AT HTTP://WWW.USPTO.GOV/EBC/EFS_HELP.HTML.

APPLICANT HEREBY REQUESTS PARTICIPATION IN THE PCT-PPH PILOT PROGRAM AND PETITIONS TO MAKE THE ABOVE-IDENTIFIED APPLICATION SPECIAL UNDER THE PCT-PPH PILOT PROGRAM.

The above-identified application is (1) a national stage entry of the corresponding PCT application, or (2) a national stage entry of another PCT application which claims priority to the corresponding PCT application, or (3) a national application that claims domestic/ foreign priority to the corresponding PCT application, or (4) a national application which forms the basis for the priority claim in the corresponding PCT application, or (5) a continuing application of a U.S. application that satisfies one of (1) to (4) above, or (6) a U.S. application that claims domestic benefit to a U.S. provisional application which forms the basis for the priority claim in the corresponding PCT application.

The corresponding PCT application number(s) is/are: PCT/US2011/024622

The international filing date of the corresponding PCT application(s) is/are: 02/11/2011

I. List of Required Documents:

a. **A copy of the latest international work product (WO/ISA, WO/IPEA, or IPER) in the above-identified corresponding PCT application(s)**

☑ is attached.

☐ is not attached because the document is already in the U.S. application.

b. **A copy of all claims which were indicated as having novelty, inventive step and industrial applicability in the above-identified corresponding PCT application(s)**

☑ is attached.

☐ is not attached because the document is already in the U.S. application.

c. **English translations of the documents in a. and b. above are attached (if the documents are not in the English language). A statement that the English translation is accurate is attached for the document in b. above.**

d. **(1) An information disclosure statement listing the documents cited in the international work products (ISR, WO/ISA, WO/IPEA, IPER) of the corresponding PCT application.**

☑ is attached.

☐ has already been filed in the above-identified U.S. application on _____

(2) Copies of all documents (except for U.S. patents or U.S. patent application publications)

☑ are attached.

☐ have already been filed in the above-identified U.S. application on _____

This collection of information is required by 35 U.S.C. 119, 37 CFR 1.55, and 37 CFR 1.102(d). The information is required to obtain or retain a benefit by the public, which is to file (and by the USPTO to process) an application. Confidentiality is governed by 35 U.S.C. 122 and 37 CFR 1.11 and 1.14. This collection is estimated to take 2 hours to complete, including gathering, preparing, and submitting the completed application form to the USPTO. Time will vary depending upon the individual case. Any comments on the amount of time you require to complete this form and/or suggestions for reducing this burden should be sent to the Chief Information Officer, U.S. Patent and Trademark Office, U.S. Department of Commerce, P.O. Box 1450, Alexandria, VA 22313-1450. DO NOT SEND FEES OR COMPLETED FORMS TO THIS ADDRESS.

Under the Paperwork Reduction Act of 1995, no persons are required to respond to a collection of information unless it displays a valid OMB control number.

REQUEST FOR PARTICIPATION IN THE PCT-PPH PILOT PROGRAM BETWEEN THE KIPO AND THE USPTO

(continued)

Application No.:	13/026,098	First Named Inventor:	Jeffrey Alan Craig

II. Claims Correspondence Table:

Claims in US Application	Patentable Claims in the corresponding PCT application	Explanation regarding the correspondence
1-21	1-21	Exactly the same.

III. All the claims in the US application sufficiently correspond to the patentable claims in the corresponding PCT application.

Signature /Gregory A. Hunt/	Date February 22, 2012
Name (Print/Typed) Gregory A. Hunt	Registration Number 41,085

Privacy Act Statement

The **Privacy Act of 1974 (P.L. 93-579)** requires that you be given certain information in connection with your submission of the attached form related to a patent application or patent. Accordingly, pursuant to the requirements of the Act, please be advised that: (1) the general authority for the collection of this information is 35 U.S.C. 2(b)(2); (2) furnishing of the information solicited is voluntary; and (3) the principal purpose for which the information is used by the U.S. Patent and Trademark Office is to process and/or examine your submission related to a patent application or patent. If you do not furnish the requested information, the U.S. Patent and Trademark Office may not be able to process and/or examine your submission, which may result in termination of proceedings or abandonment of the application or expiration of the patent.

The information provided by you in this form will be subject to the following routine uses:

1. The information on this form will be treated confidentially to the extent allowed under the Freedom of Information Act (5 U.S.C. 552) and the Privacy Act (5 U.S.C 552a). Records from this system of records may be disclosed to the Department of Justice to determine whether disclosure of these records is required by the Freedom of Information Act.
2. A record from this system of records may be disclosed, as a routine use, in the course of presenting evidence to a court, magistrate, or administrative tribunal, including disclosures to opposing counsel in the course of settlement negotiations.
3. A record in this system of records may be disclosed, as a routine use, to a Member of Congress submitting a request involving an individual, to whom the record pertains, when the individual has requested assistance from the Member with respect to the subject matter of the record.
4. A record in this system of records may be disclosed, as a routine use, to a contractor of the Agency having need for the information in order to perform a contract. Recipients of information shall be required to comply with the requirements of the Privacy Act of 1974, as amended, pursuant to 5 U.S.C. 552a(m).
5. A record related to an International Application filed under the Patent Cooperation Treaty in this system of records may be disclosed, as a routine use, to the International Bureau of the World Intellectual Property Organization, pursuant to the Patent Cooperation Treaty.
6. A record in this system of records may be disclosed, as a routine use, to another federal agency for purposes of National Security review (35 U.S.C. 181) and for review pursuant to the Atomic Energy Act (42 U.S.C. 218(c)).
7. A record from this system of records may be disclosed, as a routine use, to the Administrator, General Services, or his/her designee, during an inspection of records conducted by GSA as part of that agency's responsibility to recommend improvements in records management practices and programs, under authority of 44 U.S.C. 2904 and 2906. Such disclosure shall be made in accordance with the GSA regulations governing inspection of records for this purpose, and any other relevant (*i.e.*, GSA or Commerce) directive. Such disclosure shall not be used to make determinations about individuals.
8. A record from this system of records may be disclosed, as a routine use, to the public after either publication of the application pursuant to 35 U.S.C. 122(b) or issuance of a patent pursuant to 35 U.S.C. 151. Further, a record may be disclosed, subject to the limitations of 37 CFR 1.14, as a routine use, to the public if the record was filed in an application which became abandoned or in which the proceedings were terminated and which application is referenced by either a published application, an application open to public inspection or an issued patent.
9. A record from this system of records may be disclosed, as a routine use, to a Federal, State, or local law enforcement agency, if the USPTO becomes aware of a violation or potential violation of law or regulation.

PTO/SB/20PCT-KR (06-10)
Approved for use through 01/31/2015. OMB 0651-0058
U.S. Patent and Trademark Office; U.S DEPARTMENT OF COMMERCE
Under the Paperwork Reduction Act of 1995, no persons are required to respond to a collection of information unless it displays a valid OMB control number.

REQUEST FOR PARTICIPATION IN THE PATENT COOPERATION TREATY – PATENT PROSECUTION HIGHWAY (PCT-PPH) PILOT PROGRAM BETWEEN THE KOREAN INTELLECTUAL PROPERTY OFFICE (KIPO) AND THE USPTO

Application No.:	13/026,105	First Named Inventor:	Jeffrey Alan Craig
Filing Date:	02/11/2011	Attorney Docket No.:	1322/399/4
Title of the Invention:	METHODS, SYSTEMS, AND COMPUTER READABLE MEDIA FOR INTER-MESSAGE PROCESSOR STATUS SHARING		

THIS REQUEST FOR PARTICIPATION IN THE PCT-PPH PILOT PROGRAM ALONG WITH THE REQUIRED DOCUMENTS MUST BE SUBMITTED VIA EFS-WEB. INFORMATION REGARDING EFS-WEB IS AVAILABLE AT HTTP://WWW.USPTO.GOV/EBC/EFS_HELP.HTML.

APPLICANT HEREBY REQUESTS PARTICIPATION IN THE PCT-PPH PILOT PROGRAM AND PETITIONS TO MAKE THE ABOVE-IDENTIFIED APPLICATION SPECIAL UNDER THE PCT-PPH PILOT PROGRAM.

The above-identified application is (1) a national stage entry of the corresponding PCT application, or (2) a national stage entry of another PCT application which claims priority to the corresponding PCT application, or (3) a national application that claims domestic/ foreign priority to the corresponding PCT application, or (4) a national application which forms the basis for the priority claim in the corresponding PCT application, or (5) a continuing application of a U.S. application that satisfies one of (1) to (4) above, or (6) a U.S. application that claims domestic benefit to a U.S. provisional application which forms the basis for the priority claim in the corresponding PCT application.

The corresponding PCT application number(s) is/are: PCT/US2011/024621

The international filing date of the corresponding PCT application(s) is/are: 02/11/2011

I. List of Required Documents:

a. **A copy of the latest international work product (WO/ISA, WO/IPEA, or IPER) in the above-identified corresponding PCT application(s)**

☑ is attached.

☐ is not attached because the document is already in the U.S. application.

b. **A copy of all claims which were indicated as having novelty, inventive step and industrial applicability in the above-identified corresponding PCT application(s)**

☑ is attached.

☐ is not attached because the document is already in the U.S. application.

c. **English translations of the documents in a. and b. above are attached (if the documents are not in the English language). A statement that the English translation is accurate is attached for the document in b. above.**

d. **(1) An information disclosure statement listing the documents cited in the international work products (ISR, WO/ISA, WO/IPEA, IPER) of the corresponding PCT application.**

☑ is attached.

☐ has already been filed in the above-identified U.S. application on _____

(2) Copies of all documents (except for U.S. patents or U.S. patent application publications)

☑ are attached.

☐ have already been filed in the above-identified U.S. application on _____

This collection of information is required by 35 U.S.C. 119, 37 CFR 1.55, and 37 CFR 1.102(d). The information is required to obtain or retain a benefit by the public, which is to file (and by the USPTO to process) an application. Confidentiality is governed by 35 U.S.C. 122 and 37 CFR 1.11 and 1.14. This collection is estimated to take 2 hours to complete, including gathering, preparing, and submitting the completed application form to the USPTO. Time will vary depending upon the individual case. Any comments on the amount of time you require to complete this form and/or suggestions for reducing this burden should be sent to the Chief Information Officer, U.S. Patent and Trademark Office, U.S. Department of Commerce, P.O. Box 1450, Alexandria, VA 22313-1450. DO NOT SEND FEES OR COMPLETED FORMS TO THIS ADDRESS.

Under the Paperwork Reduction Act of 1995, no persons are required to respond to a collection of information unless it displays a valid OMB control number.

REQUEST FOR PARTICIPATION IN THE PCT-PPH PILOT PROGRAM BETWEEN THE KIPO AND THE USPTO

(continued)

Application No.:	13/026,105	First Named Inventor:	Jeffrey Alan Craig

II. Claims Correspondence Table:

Claims in US Application	Patentable Claims in the corresponding PCT application	Explanation regarding the correspondence
1-23	1-23	Exactly the same.

III. All the claims in the US application sufficiently correspond to the patentable claims in the corresponding PCT application.

Signature /Gregory A. Hunt/	Date February 22, 2012
Name (Print/Typed) Gregory A. Hunt	Registration Number 41,085

Privacy Act Statement

The **Privacy Act of 1974 (P.L. 93-579)** requires that you be given certain information in connection with your submission of the attached form related to a patent application or patent. Accordingly, pursuant to the requirements of the Act, please be advised that: (1) the general authority for the collection of this information is 35 U.S.C. 2(b)(2); (2) furnishing of the information solicited is voluntary; and (3) the principal purpose for which the information is used by the U.S. Patent and Trademark Office is to process and/or examine your submission related to a patent application or patent. If you do not furnish the requested information, the U.S. Patent and Trademark Office may not be able to process and/or examine your submission, which may result in termination of proceedings or abandonment of the application or expiration of the patent.

The information provided by you in this form will be subject to the following routine uses:

1. The information on this form will be treated confidentially to the extent allowed under the Freedom of Information Act (5 U.S.C. 552) and the Privacy Act (5 U.S.C 552a). Records from this system of records may be disclosed to the Department of Justice to determine whether disclosure of these records is required by the Freedom of Information Act.
2. A record from this system of records may be disclosed, as a routine use, in the course of presenting evidence to a court, magistrate, or administrative tribunal, including disclosures to opposing counsel in the course of settlement negotiations.
3. A record in this system of records may be disclosed, as a routine use, to a Member of Congress submitting a request involving an individual, to whom the record pertains, when the individual has requested assistance from the Member with respect to the subject matter of the record.
4. A record in this system of records may be disclosed, as a routine use, to a contractor of the Agency having need for the information in order to perform a contract. Recipients of information shall be required to comply with the requirements of the Privacy Act of 1974, as amended, pursuant to 5 U.S.C. 552a(m).
5. A record related to an International Application filed under the Patent Cooperation Treaty in this system of records may be disclosed, as a routine use, to the International Bureau of the World Intellectual Property Organization, pursuant to the Patent Cooperation Treaty.
6. A record in this system of records may be disclosed, as a routine use, to another federal agency for purposes of National Security review (35 U.S.C. 181) and for review pursuant to the Atomic Energy Act (42 U.S.C. 218(c)).
7. A record from this system of records may be disclosed, as a routine use, to the Administrator, General Services, or his/her designee, during an inspection of records conducted by GSA as part of that agency's responsibility to recommend improvements in records management practices and programs, under authority of 44 U.S.C. 2904 and 2906. Such disclosure shall be made in accordance with the GSA regulations governing inspection of records for this purpose, and any other relevant (*i.e.*, GSA or Commerce) directive. Such disclosure shall not be used to make determinations about individuals.
8. A record from this system of records may be disclosed, as a routine use, to the public after either publication of the application pursuant to 35 U.S.C. 122(b) or issuance of a patent pursuant to 35 U.S.C. 151. Further, a record may be disclosed, subject to the limitations of 37 CFR 1.14, as a routine use, to the public if the record was filed in an application which became abandoned or in which the proceedings were terminated and which application is referenced by either a published application, an application open to public inspection or an issued patent.
9. A record from this system of records may be disclosed, as a routine use, to a Federal, State, or local law enforcement agency, if the USPTO becomes aware of a violation or potential violation of law or regulation.

PTO/SB/20PCT-KR (06-10)
Approved for use through 01/31/2015. OMB 0651-0058
U.S. Patent and Trademark Office; U.S DEPARTMENT OF COMMERCE
Under the Paperwork Reduction Act of 1995, no persons are required to respond to a collection of information unless it displays a valid OMB control number.

REQUEST FOR PARTICIPATION IN THE PATENT COOPERATION TREATY – PATENT PROSECUTION HIGHWAY (PCT-PPH) PILOT PROGRAM BETWEEN THE KOREAN INTELLECTUAL PROPERTY OFFICE (KIPO) AND THE USPTO

Application No.:	13/026,112	First Named Inventor:	Jeffrey Alan Craig
Filing Date:	02/11/2011	Attorney Docket No.:	1322/399/9
Title of the Invention:	METHODS, SYSTEMS, AND COMPUTER READABLE MEDIA FOR ANSWER-BASED ROUTING OF DIAMETER REQUEST MESSAGES		

THIS REQUEST FOR PARTICIPATION IN THE PCT-PPH PILOT PROGRAM ALONG WITH THE REQUIRED DOCUMENTS MUST BE SUBMITTED VIA EFS-WEB. INFORMATION REGARDING EFS-WEB IS AVAILABLE AT HTTP://WWW.USPTO.GOV/EBC/EFS_HELP.HTML.

APPLICANT HEREBY REQUESTS PARTICIPATION IN THE PCT-PPH PILOT PROGRAM AND PETITIONS TO MAKE THE ABOVE-IDENTIFIED APPLICATION SPECIAL UNDER THE PCT-PPH PILOT PROGRAM.

The above-identified application is (1) a national stage entry of the corresponding PCT application, or (2) a national stage entry of another PCT application which claims priority to the corresponding PCT application, or (3) a national application that claims domestic/ foreign priority to the corresponding PCT application, or (4) a national application which forms the basis for the priority claim in the corresponding PCT application, or (5) a continuing application of a U.S. application that satisfies one of (1) to (4) above, or (6) a U.S. application that claims domestic benefit to a U.S. provisional application which forms the basis for the priority claim in the corresponding PCT application.

The corresponding PCT application number(s) is/are: PCT/US2011/024625

The international filing date of the corresponding PCT application(s) is/are: 02/11/2011

I. List of Required Documents:

a. **A copy of the latest international work product (WO/ISA, WO/IPEA, or IPER) in the above-identified corresponding PCT application(s)**

☑ is attached.

☐ is not attached because the document is already in the U.S. application.

b. **A copy of all claims which were indicated as having novelty, inventive step and industrial applicability in the above-identified corresponding PCT application(s)**

☑ is attached.

☐ is not attached because the document is already in the U.S. application.

c. **English translations of the documents in a. and b. above are attached (if the documents are not in the English language). A statement that the English translation is accurate is attached for the document in b. above.**

d. **(1) An information disclosure statement listing the documents cited in the international work products (ISR, WO/ISA, WO/IPEA, IPER) of the corresponding PCT application.**

☑ is attached.

☐ has already been filed in the above-identified U.S. application on _____

(2) Copies of all documents (except for U.S. patents or U.S. patent application publications)

☑ are attached.

☐ have already been filed in the above-identified U.S. application on _____

This collection of information is required by 35 U.S.C. 119, 37 CFR 1.55, and 37 CFR 1.102(d). The information is required to obtain or retain a benefit by the public, which is to file (and by the USPTO to process) an application. Confidentiality is governed by 35 U.S.C. 122 and 37 CFR 1.11 and 1.14. This collection is estimated to take 2 hours to complete, including gathering, preparing, and submitting the completed application form to the USPTO. Time will vary depending upon the individual case. Any comments on the amount of time you require to complete this form and/or suggestions for reducing this burden should be sent to the Chief Information Officer, U.S. Patent and Trademark Office, U.S. Department of Commerce, P.O. Box 1450, Alexandria, VA 22313-1450. DO NOT SEND FEES OR COMPLETED FORMS TO THIS ADDRESS.

Under the Paperwork Reduction Act of 1995, no persons are required to respond to a collection of information unless it displays a valid OMB control number.

REQUEST FOR PARTICIPATION IN THE PCT-PPH PILOT PROGRAM BETWEEN THE KIPO AND THE USPTO

(continued)

Application No.:	13/026,112	First Named Inventor:	Jeffrey Alan Craig

II. Claims Correspondence Table:

Claims in US Application	Patentable Claims in the corresponding PCT application	Explanation regarding the correspondence
1-22	1-22	Exactly the same.

III. All the claims in the US application sufficiently correspond to the patentable claims in the corresponding PCT application.

Signature /Gregory A. Hunt/	Date February 24, 2012
Name (Print/Typed) Gregory A. Hunt	Registration Number 41,085

Privacy Act Statement

The **Privacy Act of 1974 (P.L. 93-579)** requires that you be given certain information in connection with your submission of the attached form related to a patent application or patent. Accordingly, pursuant to the requirements of the Act, please be advised that: (1) the general authority for the collection of this information is 35 U.S.C. 2(b)(2); (2) furnishing of the information solicited is voluntary; and (3) the principal purpose for which the information is used by the U.S. Patent and Trademark Office is to process and/or examine your submission related to a patent application or patent. If you do not furnish the requested information, the U.S. Patent and Trademark Office may not be able to process and/or examine your submission, which may result in termination of proceedings or abandonment of the application or expiration of the patent.

The information provided by you in this form will be subject to the following routine uses:

1. The information on this form will be treated confidentially to the extent allowed under the Freedom of Information Act (5 U.S.C. 552) and the Privacy Act (5 U.S.C 552a). Records from this system of records may be disclosed to the Department of Justice to determine whether disclosure of these records is required by the Freedom of Information Act.
2. A record from this system of records may be disclosed, as a routine use, in the course of presenting evidence to a court, magistrate, or administrative tribunal, including disclosures to opposing counsel in the course of settlement negotiations.
3. A record in this system of records may be disclosed, as a routine use, to a Member of Congress submitting a request involving an individual, to whom the record pertains, when the individual has requested assistance from the Member with respect to the subject matter of the record.
4. A record in this system of records may be disclosed, as a routine use, to a contractor of the Agency having need for the information in order to perform a contract. Recipients of information shall be required to comply with the requirements of the Privacy Act of 1974, as amended, pursuant to 5 U.S.C. 552a(m).
5. A record related to an International Application filed under the Patent Cooperation Treaty in this system of records may be disclosed, as a routine use, to the International Bureau of the World Intellectual Property Organization, pursuant to the Patent Cooperation Treaty.
6. A record in this system of records may be disclosed, as a routine use, to another federal agency for purposes of National Security review (35 U.S.C. 181) and for review pursuant to the Atomic Energy Act (42 U.S.C. 218(c)).
7. A record from this system of records may be disclosed, as a routine use, to the Administrator, General Services, or his/her designee, during an inspection of records conducted by GSA as part of that agency's responsibility to recommend improvements in records management practices and programs, under authority of 44 U.S.C. 2904 and 2906. Such disclosure shall be made in accordance with the GSA regulations governing inspection of records for this purpose, and any other relevant (*i.e.*, GSA or Commerce) directive. Such disclosure shall not be used to make determinations about individuals.
8. A record from this system of records may be disclosed, as a routine use, to the public after either publication of the application pursuant to 35 U.S.C. 122(b) or issuance of a patent pursuant to 35 U.S.C. 151. Further, a record may be disclosed, subject to the limitations of 37 CFR 1.14, as a routine use, to the public if the record was filed in an application which became abandoned or in which the proceedings were terminated and which application is referenced by either a published application, an application open to public inspection or an issued patent.
9. A record from this system of records may be disclosed, as a routine use, to a Federal, State, or local law enforcement agency, if the USPTO becomes aware of a violation or potential violation of law or regulation.

PTO/SB/20PCT-KR (06-10)
Approved for use through 01/31/2015. OMB 0651-0058
U.S. Patent and Trademark Office; U.S DEPARTMENT OF COMMERCE
Under the Paperwork Reduction Act of 1995, no persons are required to respond to a collection of information unless it displays a valid OMB control number.

REQUEST FOR PARTICIPATION IN THE PATENT COOPERATION TREATY – PATENT PROSECUTION HIGHWAY (PCT-PPH) PILOT PROGRAM BETWEEN THE KOREAN INTELLECTUAL PROPERTY OFFICE (KIPO) AND THE USPTO

Application No.:	13/026,153	First Named Inventor:	Mark Edward Kanode
Filing Date:	02/11/2011	Attorney Docket No.:	1322/399/13
Title of the Invention:	METHODS, SYSTEMS, AND COMPUTER READABLE MEDIA FOR DIAMETER NETWORK MANAGEMENT		

THIS REQUEST FOR PARTICIPATION IN THE PCT-PPH PILOT PROGRAM ALONG WITH THE REQUIRED DOCUMENTS MUST BE SUBMITTED VIA EFS-WEB. INFORMATION REGARDING EFS-WEB IS AVAILABLE AT HTTP://WWW.USPTO.GOV/EBC/EFS_HELP.HTML.

APPLICANT HEREBY REQUESTS PARTICIPATION IN THE PCT-PPH PILOT PROGRAM AND PETITIONS TO MAKE THE ABOVE-IDENTIFIED APPLICATION SPECIAL UNDER THE PCT-PPH PILOT PROGRAM.

The above-identified application is (1) a national stage entry of the corresponding PCT application, or (2) a national stage entry of another PCT application which claims priority to the corresponding PCT application, or (3) a national application that claims domestic/ foreign priority to the corresponding PCT application, or (4) a national application which forms the basis for the priority claim in the corresponding PCT application, or (5) a continuing application of a U.S. application that satisfies one of (1) to (4) above, or (6) a U.S. application that claims domestic benefit to a U.S. provisional application which forms the basis for the priority claim in the corresponding PCT application.

The corresponding PCT application number(s) is/are: PCT/US2011/024645

The international filing date of the corresponding PCT application(s) is/are: 02/11/2011

I. List of Required Documents:

a. **A copy of the latest international work product (WO/ISA, WO/IPEA, or IPER) in the above-identified corresponding PCT application(s)**

☑ is attached.

☐ is not attached because the document is already in the U.S. application.

b. **A copy of all claims which were indicated as having novelty, inventive step and industrial applicability in the above-identified corresponding PCT application(s)**

☑ is attached.

☐ is not attached because the document is already in the U.S. application.

c. **English translations of the documents in a. and b. above are attached (if the documents are not in the English language). A statement that the English translation is accurate is attached for the document in b. above.**

d. **(1) An information disclosure statement listing the documents cited in the international work products (ISR, WO/ISA, WO/IPEA, IPER) of the corresponding PCT application.**

☑ is attached.

☐ has already been filed in the above-identified U.S. application on _____

(2) Copies of all documents (except for U.S. patents or U.S. patent application publications)

☑ are attached.

☐ have already been filed in the above-identified U.S. application on _____

This collection of information is required by 35 U.S.C. 119, 37 CFR 1.55, and 37 CFR 1.102(d). The information is required to obtain or retain a benefit by the public, which is to file (and by the USPTO to process) an application. Confidentiality is governed by 35 U.S.C. 122 and 37 CFR 1.11 and 1.14. This collection is estimated to take 2 hours to complete, including gathering, preparing, and submitting the completed application form to the USPTO. Time will vary depending upon the individual case. Any comments on the amount of time you require to complete this form and/or suggestions for reducing this burden should be sent to the Chief Information Officer, U.S. Patent and Trademark Office, U.S. Department of Commerce, P.O. Box 1450, Alexandria, VA 22313-1450. DO NOT SEND FEES OR COMPLETED FORMS TO THIS ADDRESS.

Under the Paperwork Reduction Act of 1995, no persons are required to respond to a collection of information unless it displays a valid OMB control number.

REQUEST FOR PARTICIPATION IN THE PCT-PPH PILOT PROGRAM BETWEEN THE KIPO AND THE USPTO

(continued)

Application No.:	13/026,153	First Named Inventor:	Mark Edward Kanode

II. Claims Correspondence Table:

Claims in US Application	Patentable Claims in the corresponding PCT application	Explanation regarding the correspondence
1-26	1-26	The same except for typographical errors in claims 9 and 21 corrected by preliminary amendment on October 20, 2011.

III. All the claims in the US application sufficiently correspond to the patentable claims in the corresponding PCT application.

Signature /Gregory A. Hunt/	Date February 24, 2012
Name (Print/Typed) Gregory A. Hunt	Registration Number 41,085

Privacy Act Statement

The **Privacy Act of 1974 (P.L. 93-579)** requires that you be given certain information in connection with your submission of the attached form related to a patent application or patent. Accordingly, pursuant to the requirements of the Act, please be advised that: (1) the general authority for the collection of this information is 35 U.S.C. 2(b)(2); (2) furnishing of the information solicited is voluntary; and (3) the principal purpose for which the information is used by the U.S. Patent and Trademark Office is to process and/or examine your submission related to a patent application or patent. If you do not furnish the requested information, the U.S. Patent and Trademark Office may not be able to process and/or examine your submission, which may result in termination of proceedings or abandonment of the application or expiration of the patent.

The information provided by you in this form will be subject to the following routine uses:

1. The information on this form will be treated confidentially to the extent allowed under the Freedom of Information Act (5 U.S.C. 552) and the Privacy Act (5 U.S.C 552a). Records from this system of records may be disclosed to the Department of Justice to determine whether disclosure of these records is required by the Freedom of Information Act.
2. A record from this system of records may be disclosed, as a routine use, in the course of presenting evidence to a court, magistrate, or administrative tribunal, including disclosures to opposing counsel in the course of settlement negotiations.
3. A record in this system of records may be disclosed, as a routine use, to a Member of Congress submitting a request involving an individual, to whom the record pertains, when the individual has requested assistance from the Member with respect to the subject matter of the record.
4. A record in this system of records may be disclosed, as a routine use, to a contractor of the Agency having need for the information in order to perform a contract. Recipients of information shall be required to comply with the requirements of the Privacy Act of 1974, as amended, pursuant to 5 U.S.C. 552a(m).
5. A record related to an International Application filed under the Patent Cooperation Treaty in this system of records may be disclosed, as a routine use, to the International Bureau of the World Intellectual Property Organization, pursuant to the Patent Cooperation Treaty.
6. A record in this system of records may be disclosed, as a routine use, to another federal agency for purposes of National Security review (35 U.S.C. 181) and for review pursuant to the Atomic Energy Act (42 U.S.C. 218(c)).
7. A record from this system of records may be disclosed, as a routine use, to the Administrator, General Services, or his/her designee, during an inspection of records conducted by GSA as part of that agency's responsibility to recommend improvements in records management practices and programs, under authority of 44 U.S.C. 2904 and 2906. Such disclosure shall be made in accordance with the GSA regulations governing inspection of records for this purpose, and any other relevant (*i.e.*, GSA or Commerce) directive. Such disclosure shall not be used to make determinations about individuals.
8. A record from this system of records may be disclosed, as a routine use, to the public after either publication of the application pursuant to 35 U.S.C. 122(b) or issuance of a patent pursuant to 35 U.S.C. 151. Further, a record may be disclosed, subject to the limitations of 37 CFR 1.14, as a routine use, to the public if the record was filed in an application which became abandoned or in which the proceedings were terminated and which application is referenced by either a published application, an application open to public inspection or an issued patent.
9. A record from this system of records may be disclosed, as a routine use, to a Federal, State, or local law enforcement agency, if the USPTO becomes aware of a violation or potential violation of law or regulation.

PTO/SB/20PCT-KR (06-10)
Approved for use through 01/31/2015. OMB 0651-0058
U.S. Patent and Trademark Office; U.S DEPARTMENT OF COMMERCE
Under the Paperwork Reduction Act of 1995, no persons are required to respond to a collection of information unless it displays a valid OMB control number.

REQUEST FOR PARTICIPATION IN THE PATENT COOPERATION TREATY – PATENT PROSECUTION HIGHWAY (PCT-PPH) PILOT PROGRAM BETWEEN THE KOREAN INTELLECTUAL PROPERTY OFFICE (KIPO) AND THE USPTO

Application No.:	13/026,162	First Named Inventor:	Jeffrey Alan Craig
Filing Date:	02/11/2011	Attorney Docket No.:	1322/399/14
Title of the Invention:	METHODS, SYSTEMS, AND COMPUTER READABLE MEDIA FOR DIAMETER APPLICATION LOOP PREVENTION		

THIS REQUEST FOR PARTICIPATION IN THE PCT-PPH PILOT PROGRAM ALONG WITH THE REQUIRED DOCUMENTS MUST BE SUBMITTED VIA EFS-WEB. INFORMATION REGARDING EFS-WEB IS AVAILABLE AT HTTP://WWW.USPTO.GOV/EBC/EFS_HELP.HTML.

APPLICANT HEREBY REQUESTS PARTICIPATION IN THE PCT-PPH PILOT PROGRAM AND PETITIONS TO MAKE THE ABOVE-IDENTIFIED APPLICATION SPECIAL UNDER THE PCT-PPH PILOT PROGRAM.

The above-identified application is (1) a national stage entry of the corresponding PCT application, or (2) a national stage entry of another PCT application which claims priority to the corresponding PCT application, or (3) a national application that claims domestic/ foreign priority to the corresponding PCT application, or (4) a national application which forms the basis for the priority claim in the corresponding PCT application, or (5) a continuing application of a U.S. application that satisfies one of (1) to (4) above, or (6) a U.S. application that claims domestic benefit to a U.S. provisional application which forms the basis for the priority claim in the corresponding PCT application.

The corresponding PCT application number(s) is/are: PCT/US2011/024646

The international filing date of the corresponding PCT application(s) is/are: 02/11/2011

I. List of Required Documents:

a. **A copy of the latest international work product (WO/ISA, WO/IPEA, or IPER) in the above-identified corresponding PCT application(s)**

☑ is attached.

☐ is not attached because the document is already in the U.S. application.

b. **A copy of all claims which were indicated as having novelty, inventive step and industrial applicability in the above-identified corresponding PCT application(s)**

☑ is attached.

☐ is not attached because the document is already in the U.S. application.

c. **English translations of the documents in a. and b. above are attached (if the documents are not in the English language). A statement that the English translation is accurate is attached for the document in b. above.**

d. **(1) An information disclosure statement listing the documents cited in the international work products (ISR, WO/ISA, WO/IPEA, IPER) of the corresponding PCT application.**

☑ is attached.

☐ has already been filed in the above-identified U.S. application on _____

(2) Copies of all documents (except for U.S. patents or U.S. patent application publications)

☑ are attached.

☐ have already been filed in the above-identified U.S. application on _____

This collection of information is required by 35 U.S.C. 119, 37 CFR 1.55, and 37 CFR 1.102(d). The information is required to obtain or retain a benefit by the public, which is to file (and by the USPTO to process) an application. Confidentiality is governed by 35 U.S.C. 122 and 37 CFR 1.11 and 1.14. This collection is estimated to take 2 hours to complete, including gathering, preparing, and submitting the completed application form to the USPTO. Time will vary depending upon the individual case. Any comments on the amount of time you require to complete this form and/or suggestions for reducing this burden should be sent to the Chief Information Officer, U.S. Patent and Trademark Office, U.S. Department of Commerce, P.O. Box 1450, Alexandria, VA 22313-1450. DO NOT SEND FEES OR COMPLETED FORMS TO THIS ADDRESS.

Under the Paperwork Reduction Act of 1995, no persons are required to respond to a collection of information unless it displays a valid OMB control number.

REQUEST FOR PARTICIPATION IN THE PCT-PPH PILOT PROGRAM BETWEEN THE KIPO AND THE USPTO

(continued)

Application No.:	13/026,162	First Named Inventor:	Jeffrey Alan Craig

II. Claims Correspondence Table:

Claims in US Application	Patentable Claims in the corresponding PCT application	Explanation regarding the correspondence
1-33	1-33	The same except for typographical errors corrected in claims 15 and 31 by preliminary amendment dated September 20, 2011.

III. All the claims in the US application sufficiently correspond to the patentable claims in the corresponding PCT application.

Signature /Gregory A. Hunt/	Date February 23, 2012
Name (Print/Typed) Gregory A. Hunt	Registration Number 41,085

Privacy Act Statement

The **Privacy Act of 1974 (P.L. 93-579)** requires that you be given certain information in connection with your submission of the attached form related to a patent application or patent. Accordingly, pursuant to the requirements of the Act, please be advised that: (1) the general authority for the collection of this information is 35 U.S.C. 2(b)(2); (2) furnishing of the information solicited is voluntary; and (3) the principal purpose for which the information is used by the U.S. Patent and Trademark Office is to process and/or examine your submission related to a patent application or patent. If you do not furnish the requested information, the U.S. Patent and Trademark Office may not be able to process and/or examine your submission, which may result in termination of proceedings or abandonment of the application or expiration of the patent.

The information provided by you in this form will be subject to the following routine uses:

1. The information on this form will be treated confidentially to the extent allowed under the Freedom of Information Act (5 U.S.C. 552) and the Privacy Act (5 U.S.C 552a). Records from this system of records may be disclosed to the Department of Justice to determine whether disclosure of these records is required by the Freedom of Information Act.
2. A record from this system of records may be disclosed, as a routine use, in the course of presenting evidence to a court, magistrate, or administrative tribunal, including disclosures to opposing counsel in the course of settlement negotiations.
3. A record in this system of records may be disclosed, as a routine use, to a Member of Congress submitting a request involving an individual, to whom the record pertains, when the individual has requested assistance from the Member with respect to the subject matter of the record.
4. A record in this system of records may be disclosed, as a routine use, to a contractor of the Agency having need for the information in order to perform a contract. Recipients of information shall be required to comply with the requirements of the Privacy Act of 1974, as amended, pursuant to 5 U.S.C. 552a(m).
5. A record related to an International Application filed under the Patent Cooperation Treaty in this system of records may be disclosed, as a routine use, to the International Bureau of the World Intellectual Property Organization, pursuant to the Patent Cooperation Treaty.
6. A record in this system of records may be disclosed, as a routine use, to another federal agency for purposes of National Security review (35 U.S.C. 181) and for review pursuant to the Atomic Energy Act (42 U.S.C. 218(c)).
7. A record from this system of records may be disclosed, as a routine use, to the Administrator, General Services, or his/her designee, during an inspection of records conducted by GSA as part of that agency's responsibility to recommend improvements in records management practices and programs, under authority of 44 U.S.C. 2904 and 2906. Such disclosure shall be made in accordance with the GSA regulations governing inspection of records for this purpose, and any other relevant (*i.e.*, GSA or Commerce) directive. Such disclosure shall not be used to make determinations about individuals.
8. A record from this system of records may be disclosed, as a routine use, to the public after either publication of the application pursuant to 35 U.S.C. 122(b) or issuance of a patent pursuant to 35 U.S.C. 151. Further, a record may be disclosed, subject to the limitations of 37 CFR 1.14, as a routine use, to the public if the record was filed in an application which became abandoned or in which the proceedings were terminated and which application is referenced by either a published application, an application open to public inspection or an issued patent.
9. A record from this system of records may be disclosed, as a routine use, to a Federal, State, or local law enforcement agency, if the USPTO becomes aware of a violation or potential violation of law or regulation.

PTO/SB/420 (05-10)
Approved for use through 01/31/2011. OMB 0651-0062
U.S. Patent and Trademark Office; U. S. DEPARTMENT OF COMMERCE
Under the Paperwork Reduction Act of 1995, no persons are required to respond to a collection of information unless it displays a valid OMB control number.

PETITION TO MAKE SPECIAL UNDER THE GREEN TECHNOLOGY PILOT PROGRAM

Attorney Docket Number: APCO.061A	Application Number (if known): 13/026,177	Filing date: February 11, 2011

First Named Inventor: Jeff Gibson

Title: ENVIRONMENTALLY BENEFICIAL AND EFFECTIVE HYDROCHLOROFLUOROCARBON COMPOSITIONS FOR FIRE EXTINGUISHING APPLICATIONS

APPLICANT HEREBY REQUESTS TO PARTICIPATE IN THE GREEN TECHNOLOGY PILOT PROGRAM FOR THE ABOVE-IDENTIFIED APPLICATION. See Instruction Sheet on page 2.

This petition must be timely filed electronically using the USPTO electronic filing system, EFS-Web.

1. By filing this petition:

   Applicant is requesting early publication: Applicant hereby requests early publication under 37 CFR 1.219 and the publication fee set forth in 37 CFR 1.18(d) accompanies this request.

2. By filing this petition: applicant is agreeing to make an election without traverse in a telephonic interview and elect an invention that meets the eligibility requirements set forth in the notice titled "Pilot Program for Green Technologies Including Greenhouse Gas Reduction," as modified by the notice titled "Elimination of Classification Requirement in the Green Technology Pilot Program," each of which was published in the Federal Register, if the Office determines that the claims are not obviously directed to a single invention.

3. This request is accompanied by statements of special status for the eligibility requirement.

4. The application contains no more than three (3) independent claims and twenty (20) total claims.

5. The application does not contain any multiple dependent claims.

6. Other attachments: _____

Signature /Brent Johnson/	Date 2-15-11
Name (Print/Typed) Brent Johnson, Ph.D.	Registration Number 51,851

Note: *Signatures of all the inventors or assignees of record of the entire interest or their representative(s) are required in accordance with 37 CFR 1.33 and 11.18. Please see 37 CFR 1.4(d) for the form of the signature. If necessary, submit multiple forms for more than one signature, see below*.*

☐ *Total of _____ forms are submitted.

The information is required to obtain or retain a benefit by the public which is to file (and by the USPTO to process) an application. Confidentiality is governed by 35 U.S.C. 122 and 37 CFR 1.11 and 1.14. This collection is estimated to take 1 hour to complete, including gathering, preparing, and submitting the completed application form to the USPTO. Time will vary depending upon the individual case. Any comments on the amount of time you require to complete this form and/or suggestions for reducing this burden, should be sent to the Chief Information Officer, U.S. Patent and Trademark Office, U.S. Department of Commerce, P.O. Box 1450, Alexandria, VA 22313-1450. DO NOT SEND FEES OR COMPLETED FORMS TO THIS ADDRESS. **SEND TO: Commissioner for Patents, P.O. Box 1450, Alexandria, VA 22313-1450.**

If you need assistance in completing the form, call 1-800-PTO-9199 and select option 2.

UNITED STATES PATENT AND TRADEMARK OFFICE

UNITED STATES DEPARTMENT OF COMMERCE
United States Patent and Trademark Office
Address: COMMISSIONER FOR PATENTS
P.O. Box 1450
Alexandria, Virginia 22313-1450
www.uspto.gov

APPLICATION NO.	FILING DATE	FIRST NAMED INVENTOR	ATTORNEY DOCKET NO.	CONFIRMATION NO.
13/026,177	02/11/2011	Jeff Gibson	APCO.061A	4286

20995 7590 09/20/2011
KNOBBE MARTENS OLSON & BEAR LLP
2040 MAIN STREET
FOURTEENTH FLOOR
IRVINE, CA 92614

EXAMINER

ART UNIT	PAPER NUMBER
1761	

NOTIFICATION DATE	DELIVERY MODE
09/20/2011	ELECTRONIC

Please find below and/or attached an Office communication concerning this application or proceeding.

The time period for reply, if any, is set in the attached communication.

Notice of the Office communication was sent electronically on above-indicated "Notification Date" to the following e-mail address(es):

jcartee@kmob.com
efiling@kmob.com
eOAPilot@kmob.com

UNITED STATES PATENT AND TRADEMARK OFFICE

Commissioner for Patents
United States Patent and Trademark Office
P.O. Box 1450
Alexandria, VA 22313-1450
www.uspto.gov

KNOBBE MARTENS OLSON & BEAR LLP
2040 MAIN STREET
FOURTEENTH FLOOR
IRVINE CA 92614

9/20/11

In re Application of	:	
Gibson et al.	:	DECISION ON PETITION
Application No. 13/026,177	:	TO MAKE SPECIAL UNDER
Filed: 2/11/2011	:	THE GREEN TECHNOLOGY
Attorney Docket No. **APCO.061A**	:	PILOT PROGRAM

This is a decision on the petition under 37 CFR 1.102, filed 2/15/2011, to make the above-identified application special under the pilot program for applications pertaining to Green Technologies as set forth in 74 Federal Register Notice 64666 (December 8, 2009) and amended by 75 Federal Register Notice 28554 (May 21, 2010) and 75 Federal Register Notice 69049 (November 10, 2010).

The petition is **GRANTED**.

A grantable petition to make an application special under 37 CFR 1.102 and the pilot program as set forth in 74 FR 64666 must be directed to a nonprovisional application filed under 35 USC 111(a) or be a national stage entry under 35 USC 371, exclusive of any reissue applications.

In order to qualify for special status, the following requirements must be met. 1) The application must have no more than 3 independent claims and no more than 20 total claims. 2) The application must not contain any multiple dependent claims. 3) The petition must state the basis for seeking special status, i.e., the claimed invention either: A) materially enhances the quality of the environment or B) materially contributes to: i) the discovery or development of renewable energy resources, ii) the more efficient utilization and conservation of energy resources, or iii) greenhouse gas emission reduction. 4) If the disclosure is not clear on its face that the claimed invention materially contributes under category (A) or (B), the petition must be accompanied by a statement by the applicant, assignee, or an attorney/agent registered to practice before the Office explaining how the materiality standard is met. 5) A statement that applicant will agree to make an election without traverse in a telephonic interview if a restriction requirement is made by the examiner. 6) The petition to make special must be filed electronically. 7) The petition must be filed at least one day prior to the date that a first Office Action appears in the Patent Application Information Retrieval (PAIR) system. 8) The petition must be accompanied by a

request for early publication in compliance with 37 CFR 1.219 and include the publication fee as set forth in 37 CFR 1.18(d).

The requirement for a fee for consideration of the petition to make special for applications pertaining to Green Technologies has been waived.

The instant petition complies with items 1 – 8 above. Accordingly, the above-identified application has been accorded "special" status.

Telephone inquires concerning this decision should be directed to Tom Dunn at 571-272-1171.

The application is being forwarded to the Technology Center Art Unit 1761 for action on the merits commensurate with this decision.

/Tom Dunn/

Tom Dunn
Quality Assurance Specialist
Technology Center 1700

UNITED STATES PATENT AND TRADEMARK OFFICE

Commissioner for Patents
United States Patent and Trademark Office
P.O. Box 1450
Alexandria, VA 22313-1450
www.uspto.gov

STEPHEN CHRISTOPHER SWIFT
SWIFT LAW OFFICE
2121 EISENHOWER AVENUE
SUITE 200
ALEXANDRIA, VA 22314-4688

MAILED

MAR 29 2011

OFFICE OF PETITIONS

In re Application of

Fritz JurGen Wisotzki
Application No. 13/026,228
Filed: February 12, 2011
Attorney Docket No. 310-5

DECISION ON PETITION
TO MAKE SPECIAL UNDER
37 CFR 1.102(c)(1)

This is a decision on the petition under 37 CFR 1.102(c)(1), filed February 12, 2011, to make the above-identified application special based on applicant's age as set forth in M.P.E.P. § 708.02, Section IV.

The petition is **GRANTED**.

A grantable petition to make an application special under 37 CFR 1.102(c)(1) and MPEP § 708.02; Section IV: Applicant's Age must be accompanied by evidence showing that at least one of the applicants is 65 years of age, or more, such as a birth certificate or a statement by applicant. No fee is required

The instant petition includes a copy of applicant's passport. Accordingly, the above-identified application has been accorded "special" status.

Telephone inquiries concerning this decision should be directed to undersigned at 571-272-1642.

All other inquiries concerning either the examination or status of the application should be directed to the Technology Center.

The application is being referred back to the Office of Patent Application Processing for pre-examination processing. This application will be accorded "special status" once pre-examination processing is complete.

/AMW/
April M. Wise
Petitions Examiner
Office of Petitions

UNITED STATES PATENT AND TRADEMARK OFFICE

Commissioner for Patents
United States Patent and Trademark Office
P.O. Box 1450
Alexandria, VA 22313-1450

MAILED

FEB 09 2012

OFFICE OF PETITIONS

GREG LOPREATO
1716 FAIRBANKS STREET
NEDERLAND TX 77627

Applicant: Gregory Francis Lopreato
Appl. No.: 13/026,244
Filing Date: February 12, 2011
Title: LARIAT APTAMER: APTAMER CANDIDATE EXCLUSION BY NUCLEASE DIGESTION
Attorney Docket No. None
Pub. No.: US 20110251088 A1
Pub. Date: October 13, 2011

This is a decision on the request for a corrected patent application publication under 37 CFR 1.221(b), received on November 28, 2011, for the above-identified application.

Applicant requests that the application be republished because the patent application publication contains material errors in the specification.

The request is DISMISSED.

37 CFR 1.221 (b) is applicable "only when the Office makes a **material mistake** which is apparent from Office records.... Any request for a corrected publication or revised patent application publication other than provided as provided in paragraph (a) of this section must be filed within two months from the date of the patent application publication. This period is not extendable." (Emphasis added) A material mistake must affect the public's ability to appreciate the technical disclosure of the patent application publication, to determine the scope of the patent application publication, or to determine the scope of the provisional rights that an applicant may seek to enforce upon issuance of a patent.[1]

The errors are due to faulty optical character recognition and are, in this case, not Office error. The errors are due to the quality of the text, which makes it difficult to electronically reproduce by digital imaging and optical character recognition. See 37 CFR 1.52(a)(1)(v), which states that all papers that are to become a permanent part of Office records must be presented "in a form having sufficient clarity and contrast between the paper and the writing to permit . . . electronic capture by use of digital imaging and optical character recognition." As set forth at MPEP 1121, "applications with poor quality text, which may be acceptable for scanning and examination purposes, may lead to errors in the patent application publication. Correction of these errors and inclusion of any desired amendments into the text of the originally-filed specification and

[1]Changes to Implement Eighteen-Month Publication of Patent Applications, 65 FR 57023, 57038 (Sept. 20, 2000), 1239, Off. Gaz. Pat. Office Notices 63, 75 (Oct. 10, 2000) (final rule).

drawings will only occur if applicant files a request for republication under 37 CFR 1.221(a). They will not be corrected by the Office in a corrected publication under 37 CFR 1.221(b)."

The applicant is advised that a "request for republication of an application previously published" may be filed under 37 CFR 1.221 (a). Such a request for republication "must include a copy of the application compliance with the Office's electronic filing system requirements and be accompanied by the publication fee set forth in § 1.18 (d) and the processing fee set forth in § 1.17 (i)." If the request for republication does not comply with the electronic filing system requirements, the republication will not take place and the publication fee set forth in § 1.18 (d) will be refunded. The processing fee will be retained.

A guide for filing a request for a Pre-Grant Publication, such as a request for republication, may be found on the link below:

http://www.uspto.gov/patents/process/file/efs/guidance/index.jsp
OR
http://www.uspto.gov/ebc/portal/efs/pgpub_quickstart.pdf

Any request for republication under 37 CFR 1.221(a), must be submitted via the EFS system, as a "Pre-Grant Publication" and questions or request for reconsideration of the decision, should be addressed as follows:

By mail to: Mail Stop PGPUB
Commissioner for Patents
P.O. Box 1450
Alexandria, Va. 22313-1450

Inquiries relating to this matter may be directed to Karen Creasy at (571) 272-3208.

/Christopher Bottorff/

Christopher Bottorff
Petitions Examiner
Office of Petitions

Doc Code: PET.GREEN
Document Description: Petition for Green Tech Pilot

PTO/SB/420 (11-10)
Approved for use through 01/31/2011. OMB 0651-0062
U.S. Patent and Trademark Office; U. S. DEPARTMENT OF COMMERCE
Under the Paperwork Reduction Act of 1995, no persons are required to respond to a collection of information unless it displays a valid OMB control number.

PETITION TO MAKE SPECIAL UNDER THE GREEN TECHNOLOGY PILOT PROGRAM

Attorney Docket Number: 04030.0007-WO-C1	Application Number (if known):	Filing date: 13 February 2011
First Named Inventor: Theodora Retsina		
Title: A SYSTEM AND PROCESS FOR SEPARATING PURE CHEMICALS FROM BIOMASS EXTRACT		

APPLICANT HEREBY REQUESTS TO PARTICIPATE IN THE GREEN TECHNOLOGY PILOT PROGRAM FOR THE ABOVE-IDENTIFIED APPLICATION. See Instruction Sheet on page 2.

This petition must be timely filed electronically using the USPTO electronic filing system, EFS-Web.

1. By filing this petition:

   Applicant is requesting early publication: Applicant hereby requests early publication under 37 CFR 1.219 and the publication fee set forth in 37 CFR 1.18(d) accompanies this request.

2. By filing this petition: applicant is agreeing to make an election without traverse in a telephonic interview and elect an invention that meets the eligibility requirements for the Green Technology Pilot Program, if the Office determines that the claims are not obviously directed to a single invention. See Instruction Sheet.

3. This request is accompanied by statements of special status for the eligibility requirement.

4. The application contains no more than three (3) independent claims and twenty (20) total claims.

5. The application does not contain any multiple dependent claims.

6. Other attachments: Preliminary Amendment

Signature /Ryan P. O'Connor/	Date 13 February 2011
Name (Print/Typed) Ryan P. O'Connor	Registration Number 56,693

***Note:** Signatures of all the inventors or assignees of record of the entire interest or their representative(s) are required in accordance with 37 CFR 1.33 and 11.18. Please see 37 CFR 1.4(d) for the form of the signature. If necessary, submit multiple forms for more than one signature see below*.*

☒ *Total of 1 forms are submitted.

The information is required to obtain or retain a benefit by the public which is to file (and by the USPTO to process) an application. Confidentiality is governed by 35 U.S.C. 122 and 37 CFR 1.11 and 1.14. This collection is estimated to take 12 hours to complete, including gathering, preparing, and submitting the completed application form to the USPTO. Time will vary depending upon the individual case. Any comments on the amount of time you require to complete this form and/or suggestions for reducing this burden, should be sent to the Chief Information Officer, U.S. Patent and Trademark Office, U.S. Department of Commerce, P.O. Box 1450, Alexandria, VA 22313-1450. DO NOT SEND FEES OR COMPLETED FORMS TO THIS ADDRESS. **SEND TO: Commissioner for Patents, P.O. Box 1450, Alexandria, VA 22313-1450.**

If you need assistance in completing the form, call 1-800-PTO-9199 and select option 2.

UNITED STATES PATENT AND TRADEMARK OFFICE

UNITED STATES DEPARTMENT OF COMMERCE
United States Patent and Trademark Office
Address: COMMISSIONER FOR PATENTS
P.O. Box 1450
Alexandria, Virginia 22313-1450
www.uspto.gov

APPLICATION NO.	FILING DATE	FIRST NAMED INVENTOR	ATTORNEY DOCKET NO.	CONFIRMATION NO.
13/026,273	02/13/2011	Theodora Retsina	04030.0007-wo-c1	4563

22865 7590 05/13/2011
Altera Law Group, LLC
220 S 6 St Suite 1700
Minneapolis, MN 55402

EXAMINER

ART UNIT	PAPER NUMBER
1741	

MAIL DATE	DELIVERY MODE
05/13/2011	PAPER

Please find below and/or attached an Office communication concerning this application or proceeding.

The time period for reply, if any, is set in the attached communication.

UNITED STATES PATENT AND TRADEMARK OFFICE

Commissioner for Patents
United States Patent and Trademark Office
P.O. Box 1450
Alexandria, VA 22313-1450
www.uspto.gov

Altera Law Group, LLC
220 S 6 St Suite 1700
Minneapolis MN 55402

5/13/11

In re Application of	:	
Retsina et al.	:	DECISION ON PETITION
Application No. 13/026,273	:	TO MAKE SPECIAL UNDER
Filed: 2/13/2011	:	THE GREEN TECHNOLOGY
Attorney Docket No. **04030.0007-wo-c1**	:	PILOT PROGRAM

This is a decision on the petition under 37 CFR 1.102, filed 2/13/2011, to make the above-identified application special under the pilot program for applications pertaining to Green Technologies as set forth in 74 Federal Register Notice 64666 (December 8, 2009) and amended by 75 Federal Register Notice 28554 (May 21, 2010) and 75 Federal Register Notice 69049 (November 10, 2010).

The petition is **GRANTED**.

A grantable petition to make an application special under 37 CFR 1.102 and the pilot program as set forth in 74 FR 64666 must be directed to a nonprovisional application filed under 35 USC 111(a) or be a national stage entry under 35 USC 371, exclusive of any reissue applications.

In order to qualify for special status, the following requirements must be met. 1) The application must have no more than 3 independent claims and no more than 20 total claims. 2) The application must not contain any multiple dependent claims. 3) The petition must state the basis for seeking special status, i.e., the claimed invention either: A) materially enhances the quality of the environment or B) materially contributes to: i) the discovery or development of renewable energy resources, ii) the more efficient utilization and conservation of energy resources, or iii) greenhouse gas emission reduction. 4) If the disclosure is not clear on its face that the claimed invention materially contributes under category (A) or (B), the petition must be accompanied by a statement by the applicant, assignee, or an attorney/agent registered to practice before the Office explaining how the materiality standard is met. 5) A statement that applicant will agree to make an election without traverse in a telephonic interview if a restriction requirement is made by the examiner. 6) The petition to make special must be filed electronically. 7) The petition must be filed at least one day prior to the date that a first Office Action appears in the Patent Application Information Retrieval (PAIR) system. 8) The petition must be accompanied by a request for early publication in compliance with 37 CFR 1.219 and include the publication fee as set forth in 37 CFR 1.18(d).

The requirement for a fee for consideration of the petition to make special for applications pertaining to Green Technologies has been waived.

The instant petition complies with items 1 – 8 above. Accordingly, the above-identified application has been accorded "special" status.

Telephone inquires concerning this decision should be directed to Tom Dunn at 571-272-1171.

The application is being forwarded to the Technology Center Art Unit 1741 for action on the merits commensurate with this decision.

/Tom Dunn/

Tom Dunn
Quality Assurance Specialist
Technology Center 1700

Doc Code: PET.GREEN
Document Description: Petition for Green Tech Pilot

PTO/SB/420 (11-10)
Approved for use through 01/31/2011. OMB 0651-0062
U.S. Patent and Trademark Office; U. S. DEPARTMENT OF COMMERCE
Under the Paperwork Reduction Act of 1995, no persons are required to respond to a collection of information unless it displays a valid OMB control number.

PETITION TO MAKE SPECIAL UNDER THE GREEN TECHNOLOGY PILOT PROGRAM

Attorney Docket Number: 04030.0008-WO-C1	Application Number (if known):	Filing date: 13 February 2011
First Named Inventor: Theodora Retsina		
Title: Process For Producing Alcohol And Other Bioproducts From Biomass Used In Thermal Conversion To Energy And Stepwise Enzymatic Hydrolysis Process For Cellulosic Fiber		

APPLICANT HEREBY REQUESTS TO PARTICIPATE IN THE GREEN TECHNOLOGY PILOT PROGRAM FOR THE ABOVE-IDENTIFIED APPLICATION. See Instruction Sheet on page 2.

This petition must be timely filed electronically using the USPTO electronic filing system, EFS-Web.

1. By filing this petition:

   Applicant is requesting early publication: Applicant hereby requests early publication under 37 CFR 1.219 and the publication fee set forth in 37 CFR 1.18(d) accompanies this request.

2. By filing this petition: applicant is agreeing to make an election without traverse in a telephonic interview and elect an invention that meets the eligibility requirements for the Green Technology Pilot Program, if the Office determines that the claims are not obviously directed to a single invention. See Instruction Sheet.

3. This request is accompanied by statements of special status for the eligibility requirement.

4. The application contains no more than three (3) independent claims and twenty (20) total claims.

5. The application does not contain any multiple dependent claims.

6. Other attachments: Preliminary Amendment

Signature /Ryan P. O'Connor/	Date 13 February 2011
Name (Print/Typed) Ryan P. O'Connor	Registration Number 56,693

***Note:** Signatures of all the inventors or assignees of record of the entire interest or their representative(s) are required in accordance with 37 CFR 1.33 and 11.18. Please see 37 CFR 1.4(d) for the form of the signature. If necessary, submit multiple forms for more than one signature see below*.*

☒ *Total of 1 forms are submitted.

The information is required to obtain or retain a benefit by the public which is to file (and by the USPTO to process) an application. Confidentiality is governed by 35 U.S.C. 122 and 37 CFR 1.11 and 1.14. This collection is estimated to take 12 hours to complete, including gathering, preparing, and submitting the completed application form to the USPTO. Time will vary depending upon the individual case. Any comments on the amount of time you require to complete this form and/or suggestions for reducing this burden, should be sent to the Chief Information Officer, U.S. Patent and Trademark Office, U.S. Department of Commerce, P.O. Box 1450, Alexandria, VA 22313-1450. DO NOT SEND FEES OR COMPLETED FORMS TO THIS ADDRESS. **SEND TO: Commissioner for Patents, P.O. Box 1450, Alexandria, VA 22313-1450.**

If you need assistance in completing the form, call 1-800-PTO-9199 and select option 2.

UNITED STATES PATENT AND TRADEMARK OFFICE

UNITED STATES DEPARTMENT OF COMMERCE
United States Patent and Trademark Office
Address: COMMISSIONER FOR PATENTS
P.O. Box 1450
Alexandria, Virginia 22313-1450
www.uspto.gov

APPLICATION NO.	FILING DATE	FIRST NAMED INVENTOR	ATTORNEY DOCKET NO.	CONFIRMATION NO.
13/026,280	02/13/2011	Theodora Retsina	04030.0008-WO-C1	4571

22865 7590 11/17/2011
Altera Law Group, LLC
120 S 6 St Suite 850
Minneapolis, MN 55402

EXAMINER
ROBINSON, HOPE A

ART UNIT	PAPER NUMBER
1652	

MAIL DATE	DELIVERY MODE
11/17/2011	PAPER

Please find below and/or attached an Office communication concerning this application or proceeding.

The time period for reply, if any, is set in the attached communication.

UNITED STATES PATENT AND TRADEMARK OFFICE

Commissioner for Patents
United States Patent and Trademark Office
P.O. Box 1450
Alexandria, VA 22313-1450
www.uspto.gov

NOV 1 7 2011

Altera Law Group, LLC
120 S 6 St Suite 850
Minneapolis MN 55402

In re Application of	:	
RETSINA, Theodora *et al.*	:	DECISION ON PETITION
Application No. 13/026280	:	TO MAKE SPECIAL UNDER
Filed: February 13, 2011	:	THE GREEN TECHNOLOGY
Attorney Docket No. 04030.0008-WO-C1	:	PILOT PROGRAM

This is a decision on the petition under 37 CFR 1.102, filed February 13, 2011, to make the above-identified application special under the pilot program for applications pertaining to Green Technologies as set forth in 74 Federal Register Notice 64666 (December 8, 2009) and amended by 75 Federal Register Notice 28554 (May 21, 2010) and 75 Federal Register Notice 69049 (November 10, 2010).

The petition is **GRANTED**.

A grantable petition to make an application special under 37 CFR 1.102 and the pilot program as set forth in 74 FR 64666 must be directed to a nonprovisional application filed under 35 USC 111(a) or be a national stage entry under 35 USC 371, exclusive of any reissue applications.

In order to qualify for special status, the following requirements must be met. 1) The application must have no more than 3 independent claims and no more than 20 total claims. 2) The application must not contain any multiple dependent claims. 3) The petition must state the basis for seeking special status, i.e., the claimed invention either: A) materially enhances the quality of the environment or B) materially contributes to: i) the discovery or development of renewable energy resources, ii) the more efficient utilization and conservation of energy resources, or iii) greenhouse gas emission reduction. 4) If the disclosure is not clear on its face that the claimed invention materially contributes under category (A) or (B), the petition must be accompanied by a statement by the applicant, assignee, or an attorney/agent registered to practice before the Office explaining how the materiality standard is met. 5) A statement that applicant will agree to make an election without traverse in a telephonic interview if a restriction requirement is made by the examiner. 6) The petition to make special must be filed electronically. 7) The petition must be filed at least one day prior to the date that a first Office Action appears in the Patent Application Information Retrieval (PAIR) system. 8) The petition must be accompanied by a request for early publication in compliance with 37 CFR 1.219 and include the publication fee as set forth in 37 CFR 1.18(d).

The requirement for a fee for consideration of the petition to make special for applications pertaining to Green Technologies has been waived.

The instant petition complies with items 1 – 8 above. Accordingly, the above-identified application has been accorded "special" status.

Telephone inquires concerning this decision should be directed to Manjunath Rao at 571-272-0939.

The application is being forwarded to the Technology Center Art Unit 1652 for action on the merits commensurate with this decision.

/Manjunath Rao/

Manjunath Rao
Supervisory Patent Examiner &
POC for TC 1600 Green Tech Petitions
Technology Center 1600

UNITED STATES PATENT AND TRADEMARK OFFICE

Commissioner for Patents
United States Patent and Trademark Office
P.O. Box 1450
Alexandria, VA 22313-1450
www.uspto.gov

Fay Sharpe LLP
1228 Euclid Avenue, 5th Floor
The Halle Building
Cleveland OH 44115

MAILED
FEB 14 2012
PCT LEGAL ADMINISTRATION

In re Application of :
LIOTTA et al. :
Application No.: 13/026,346 :
Filing Date: February 14, 2011 : DECISION ON PETITION
Attorney Docket No.: IMMU 200076US04 :
For: REAL-TIME DELIVERY OF MEDICAL :
TEST DATA TO PORTABLE :
COMMUNICATIONS DEVICES

This decision is in response to applicants' "Petition under 37 CFR 1.78(a)(3)" filed 30 January 2012, to accept an unintentionally delayed claim under 35 U.S.C. §120 for the benefit of priority to the prior-filed international applications set forth in the amendment filed concurrently with the instant petition.

The petitions are **DISMISSED**.

A petition for acceptance of a claim for late priority under 37 CFR §§ 1.78(a)(3) and 1.78(a)(6) is only applicable to those applications filed on or after November 29, 2000. Further, the petition is appropriate only after the expiration of the period specified in 37 CFR §§ 1.78(a)(2)(ii) and 1.78(a)(5)(ii). In addition, the petition under 37 CFR §§ 1.78(a)(3) and 1.78(a)(6) must be accompanied by:

(1) the reference required by 35 U.S.C. §§ 120 and 119(e) and 37 CFR §§ 1.78(a)(2)(i) and 1.78(a)(5)(i) of the prior-filed application, unless previously submitted;
(2) the surcharge set forth in § 1.17(t); and
(3) a statement that the entire delay between the date the claim was due under 37 CFR §§ 1.78(a)(2)(ii) and 1.78(a)(5)(ii) and the date the claim was filed was unintentional. The Director may require additional where there is a question whether the delay was unintentional.

The petition does not comply with item (1) above for the following reasons:

The amendment fails to state the proper relationship of nonprovisional application no. 10/130,402 filed October 17, 2002 to International Application No. PCT/US2000/042116 filed November 14, 2000. (See 37 CFR 1.78(a)(2)(i)) 37 CFR 1.78(a)(2)(i) requires that any nonprovisional application claiming the benefit of one or more prior-filed copending nonprovisional applications must contain or be amended to contain a reference to each such prior-filed application, identifying it by application number (consisting of the series code and serial number) and indicating the relationship of the applications. The relationship between the applications is whether the subject application is a continuation, divisional, or continuation-in-part of a prior-filed nonprovisional application. Here, the amendment submitted with the present petition indicates that ". . .U.S. Application no. 10/130,402 is a continuation application of PCT/US2000/042116 filed November 14, 2000." However, nonprovisional application no. 10/130,402 filed October 17, 2002 is the National Stage application of International Application No. PCT/US2000/042116 filed November 14, 2000 under 35 U.S.C. 371. Therefore, the amendment filed January 30, 2012 fails to comply with the provisions of 37 CFR 1.78(a)(2) and is therefore unacceptable.

Before the petition under 37 CFR § 1.78(a)(3) can be granted, a renewed petition and either an Application Data Sheet (37 CFR 1.76(a)(2)) or a proper amendment (complying with the provisions of 37 CFR 1.121) to correct the above matters are required.

Any questions concerning this matter may be directed to Anthony Smith at (571) 272-3298.

Any further correspondence with respect to this matter may be filed electronically via EFS-Web selecting the document description "Petition for review and processing by the PCT Legal Office" or by mail addressed to Mail Stop PCT, Commissioner for Patents, Office of PCT Legal Administration, P.O. Box 1450, Alexandria, Virginia 22313-1450, with the contents of the letter marked to the attention of the Office of PCT Legal Administration.

Boris Milef
Legal Examiner
PCT Legal Administration

UNITED STATES PATENT AND TRADEMARK OFFICE

Commissioner for Patents
United States Patent and Trademark Office
P.O. Box 1450
Alexandria, VA 22313-1450
www.uspto.gov

Fay Sharpe LLP
1228 Euclid Avenue, 5th Floor
The Halle Building
Cleveland OH 44115

MAILED
MAR 26 2012
PCT LEGAL ADMINISTRATION

In re Application of :
LIOTTA et al. :
Application No.: 13/026,346 :
Filing Date: February 14, 2011 : DECISION ON PETITION
Attorney Docket No.: IMMU 200076US04 :
For: REAL-TIME DELIVERY OF MEDICAL :
TEST DATA TO PORTABLE :
COMMUNICATIONS DEVICES

This decision is in response to applicants' "Renewed Petition under 37 CFR 1.78(a)(3)" filed March 07, 2012 to accept an unintentionally delayed claim under 35 U.S.C. §120 for the benefit of priority to the prior-filed international applications set forth in the amendment filed concurrently with the instant petition.

The petition is **DISMISSED as moot**.

As indicated in the filing receipt mailed March 03, 2011, the present U.S. patent application contains a domestic benefit claim identifying the application as a divisional of U.S. application 10/398,550. Parent application 10/130,402 is a national stage application of international application PCT/US2000/042116 filed under 35 U.S.C. 371; however, applicants did not specifically identify U.S. application 10/130,402 as the national stage of PCT/US2000/042116 in the specification filed with the original application materials on February 14, 2011. The present petition seeks acceptance of an unintentionally delayed benefit claim to international application PCT/US2000/042116.

As set forth in MPEP section 1893.03(c), "a national stage application submitted under 35 U.S.C. 371 may not claim benefit of the filing date of the international application of which it is the national stage since its filing date is the international filing date of the international application." In other words, the international application is not an earlier application (it has the same filing date as the national stage; see 35 U.S.C. 363). Thus, reference in the national stage application to the international application number is not required. Furthermore, the inclusion of such a reference does not constitute a new benefit claim under 35 U.S.C. 120 and/or 365 (c). See Broadcast Innovation, L.L.C. and IO Research PTY LTD v. Charter Communications, Inc. and

Comcast Corporation, 420 F.3d 1364, 1367 (Fed. Cir., Aug 19, 2005): "Where proper reference to a national stage application exists, no reference to the corresponding PCT application is required because the national stage application effectively has the same U.S. filing date as the PCT application."

Based on the above, in the present circumstances, where the application includes a proper benefit claim directed to the U.S. national stage application (10/130,402), a petition for acceptance of an unintentionally delayed benefit claim is not necessary in order for applicant to add a reference to the international application upon which the national stage application is based (PCT/US2000/042116). The present petition is therefore appropriately dismissed as moot.

Boris Milef
Legal Examiner
Office of PCT Legal Administration

UNITED STATES PATENT AND TRADEMARK OFFICE

UNITED STATES DEPARTMENT OF COMMERCE
United States Patent and Trademark Office
Address: COMMISSIONER FOR PATENTS
P.O. Box 1450
Alexandria, Virginia 22313-1450
www.uspto.gov

APPLICATION NUMBER	FILING or 371(c) DATE	GRP ART UNIT	FIL FEE REC'D	ATTY.DOCKET.NO	TOT CLAIMS	IND CLAIMS
13/026,346	02/14/2011	3626	462	IMMU 200076US04	13	1

CONFIRMATION NO. 4710

CORRECTED FILING RECEIPT

OC000000053324978

27885
FAY SHARPE LLP
1228 Euclid Avenue, 5th Floor
The Halle Building
Cleveland, OH 44115

Date Mailed: 03/23/2012

Receipt is acknowledged of this non-provisional patent application. The application will be taken up for examination in due course. Applicant will be notified as to the results of the examination. Any correspondence concerning the application must include the following identification information: the U.S. APPLICATION NUMBER, FILING DATE, NAME OF APPLICANT, and TITLE OF INVENTION. Fees transmitted by check or draft are subject to collection. Please verify the accuracy of the data presented on this receipt. **If an error is noted on this Filing Receipt, please submit a written request for a Filing Receipt Correction. Please provide a copy of this Filing Receipt with the changes noted thereon. If you received a "Notice to File Missing Parts" for this application, please submit any corrections to this Filing Receipt with your reply to the Notice. When the USPTO processes the reply to the Notice, the USPTO will generate another Filing Receipt incorporating the requested corrections**

Applicant(s)

Lance A. Liotta, Bethesda, MD;
Tyson Liotta, Rockville, MD;

Power of Attorney: The patent practitioners associated with Customer Number 27885

Domestic Priority data as claimed by applicant

This application is a DIV of 10/130,402 10/17/2002
which is a 371 of PCT/US2000/042116 11/14/2000
which claims benefit of 60/165,500 11/15/1999

Foreign Applications (You may be eligible to benefit from the **Patent Prosecution Highway** program at the USPTO. Please see http://www.uspto.gov for more information.)

Permission to Access - A proper **Authorization to Permit Access to Application by Participating Offices** (PTO/SB/39 or its equivalent) has been received by the USPTO.

If Required, Foreign Filing License Granted: 02/24/2011

The country code and number of your priority application, to be used for filing abroad under the Paris Convention, is **US 13/026,346**

Projected Publication Date: Not Applicable

Non-Publication Request: No

Early Publication Request: No
**** SMALL ENTITY ****

Title

REAL-TIME DELIVERY OF MEDICAL TEST DATA TO PORTABLE COMMUNICATIONS DEVICES

Preliminary Class

705

PROTECTING YOUR INVENTION OUTSIDE THE UNITED STATES

Since the rights granted by a U.S. patent extend only throughout the territory of the United States and have no effect in a foreign country, an inventor who wishes patent protection in another country must apply for a patent in a specific country or in regional patent offices. Applicants may wish to consider the filing of an international application under the Patent Cooperation Treaty (PCT). An international (PCT) application generally has the same effect as a regular national patent application in each PCT-member country. The PCT process **simplifies** the filing of patent applications on the same invention in member countries, but **does not result** in a grant of "an international patent" and does not eliminate the need of applicants to file additional documents and fees in countries where patent protection is desired.

Almost every country has its own patent law, and a person desiring a patent in a particular country must make an application for patent in that country in accordance with its particular laws. Since the laws of many countries differ in various respects from the patent law of the United States, applicants are advised to seek guidance from specific foreign countries to ensure that patent rights are not lost prematurely.

Applicants also are advised that in the case of inventions made in the United States, the Director of the USPTO must issue a license before applicants can apply for a patent in a foreign country. The filing of a U.S. patent application serves as a request for a foreign filing license. The application's filing receipt contains further information and guidance as to the status of applicant's license for foreign filing.

Applicants may wish to consult the USPTO booklet, "General Information Concerning Patents" (specifically, the section entitled "Treaties and Foreign Patents") for more information on timeframes and deadlines for filing foreign patent applications. The guide is available either by contacting the USPTO Contact Center at 800-786-9199, or it can be viewed on the USPTO website at http://www.uspto.gov/web/offices/pac/doc/general/index.html.

For information on preventing theft of your intellectual property (patents, trademarks and copyrights), you may wish to consult the U.S. Government website, http://www.stopfakes.gov. Part of a Department of Commerce initiative, this website includes self-help "toolkits" giving innovators guidance on how to protect intellectual property in specific countries such as China, Korea and Mexico. For questions regarding patent enforcement issues, applicants may call the U.S. Government hotline at 1-866-999-HALT (1-866-999-4158).

LICENSE FOR FOREIGN FILING UNDER

Title 35, United States Code, Section 184

Title 37, Code of Federal Regulations, 5.11 & 5.15

GRANTED

The applicant has been granted a license under 35 U.S.C. 184, if the phrase "IF REQUIRED, FOREIGN FILING LICENSE GRANTED" followed by a date appears on this form. Such licenses are issued in all applications where the conditions for issuance of a license have been met, regardless of whether or not a license may be required as

set forth in 37 CFR 5.15. The scope and limitations of this license are set forth in 37 CFR 5.15(a) unless an earlier license has been issued under 37 CFR 5.15(b). The license is subject to revocation upon written notification. The date indicated is the effective date of the license, unless an earlier license of similar scope has been granted under 37 CFR 5.13 or 5.14.

This license is to be retained by the licensee and may be used at any time on or after the effective date thereof unless it is revoked. This license is automatically transferred to any related applications(s) filed under 37 CFR 1.53(d). This license is not retroactive.

The grant of a license does not in any way lessen the responsibility of a licensee for the security of the subject matter as imposed by any Government contract or the provisions of existing laws relating to espionage and the national security or the export of technical data. Licensees should apprise themselves of current regulations especially with respect to certain countries, of other agencies, particularly the Office of Defense Trade Controls, Department of State (with respect to Arms, Munitions and Implements of War (22 CFR 121-128)); the Bureau of Industry and Security, Department of Commerce (15 CFR parts 730-774); the Office of Foreign AssetsControl, Department of Treasury (31 CFR Parts 500+) and the Department of Energy.

NOT GRANTED

No license under 35 U.S.C. 184 has been granted at this time, if the phrase "IF REQUIRED, FOREIGN FILING LICENSE GRANTED" DOES NOT appear on this form. Applicant may still petition for a license under 37 CFR 5.12, if a license is desired before the expiration of 6 months from the filing date of the application. If 6 months has lapsed from the filing date of this application and the licensee has not received any indication of a secrecy order under 35 U.S.C. 181, the licensee may foreign file the application pursuant to 37 CFR 5.15(b).

SelectUSA

The United States represents the largest, most dynamic marketplace in the world and is an unparalleled location for business investment, innovation and commercialization of new technologies. The USA offers tremendous resources and advantages for those who invest and manufacture goods here. Through SelectUSA, our nation works to encourage, facilitate, and accelerate business investment. To learn more about why the USA is the best country in the world to develop technology, manufacture products, and grow your business, visit SelectUSA.gov.

Doc Code: PET.GREEN
Document Description: Petition for Green Tech Pilot

PTO/SB/420 (11-10)
Approved for use through 01/31/2011. OMB 0651-0062
U.S. Patent and Trademark Office; U. S. DEPARTMENT OF COMMERCE
Under the Paperwork Reduction Act of 1995, no persons are required to respond to a collection of information unless it displays a valid OMB control number.

PETITION TO MAKE SPECIAL UNDER THE GREEN TECHNOLOGY PILOT PROGRAM

Attorney Docket Number: 83161378	Application Number (if known): 13/026,588	Filing date: February 14, 2011
First Named Inventor: Joseph Stanek		
Title: Electric Vehicle and Method of Control for Active Auxiliary Battery Depletion		

APPLICANT HEREBY REQUESTS TO PARTICIPATE IN THE GREEN TECHNOLOGY PILOT PROGRAM FOR THE ABOVE-IDENTIFIED APPLICATION. See Instruction Sheet on page 2.

This petition must be timely filed electronically using the USPTO electronic filing system, EFS-Web.

1. By filing this petition:

   Applicant is requesting early publication: Applicant hereby requests early publication under 37 CFR 1.219 and the publication fee set forth in 37 CFR 1.18(d) accompanies this request.

2. By filing this petition: applicant is agreeing to make an election without traverse in a telephonic interview and elect an invention that meets the eligibility requirements for the Green Technology Pilot Program, if the Office determines that the claims are not obviously directed to a single invention. See Instruction Sheet.

3. This request is accompanied by statements of special status for the eligibility requirement.

4. The application contains no more than three (3) independent claims and twenty (20) total claims.

5. The application does not contain any multiple dependent claims.

6. Other attachments: _____

Signature /James N. Kallis/	Date March 24, 2011
Name (Print/Typed) James N. Kallis	Registration Number 41102

Note: *Signatures of all the inventors or assignees of record of the entire interest or their representative(s) are required in accordance with 37 CFR 1.33 and 11.18. Please see 37 CFR 1.4(d) for the form of the signature. If necessary, submit multiple forms for more than one signature see below*.*

☒ *Total of 1 forms are submitted.

The information is required to obtain or retain a benefit by the public which is to file (and by the USPTO to process) an application. Confidentiality is governed by 35 U.S.C. 122 and 37 CFR 1.11 and 1.14. This collection is estimated to take 12 hours to complete, including gathering, preparing, and submitting the completed application form to the USPTO. Time will vary depending upon the individual case. Any comments on the amount of time you require to complete this form and/or suggestions for reducing this burden, should be sent to the Chief Information Officer, U.S. Patent and Trademark Office, U.S. Department of Commerce, P.O. Box 1450, Alexandria, VA 22313-1450. DO NOT SEND FEES OR COMPLETED FORMS TO THIS ADDRESS. **SEND TO: Commissioner for Patents, P.O. Box 1450, Alexandria, VA 22313-1450.**

If you need assistance in completing the form, call 1-800-PTO-9199 and select option 2.

UNITED STATES PATENT AND TRADEMARK OFFICE

UNITED STATES DEPARTMENT OF COMMERCE
United States Patent and Trademark Office
Address: COMMISSIONER FOR PATENTS
P.O. Box 1450
Alexandria, Virginia 22313-1450
www.uspto.gov

APPLICATION NO.	FILING DATE	FIRST NAMED INVENTOR	ATTORNEY DOCKET NO.	CONFIRMATION NO.
13/026,588	02/14/2011	Joseph Stanek	83161378	5166

28395 7590 05/05/2011
BROOKS KUSHMAN P.C./FGTL
1000 TOWN CENTER
22ND FLOOR
SOUTHFIELD, MI 48075-1238

EXAMINER

ART UNIT	PAPER NUMBER
3618	

MAIL DATE	DELIVERY MODE
05/05/2011	PAPER

Please find below and/or attached an Office communication concerning this application or proceeding.

The time period for reply, if any, is set in the attached communication.

UNITED STATES PATENT AND TRADEMARK OFFICE

Commissioner for Patents
United States Patent and Trademark Office
P.O. Box 1450
Alexandria, VA 22313-1450
www.uspto.gov

MAY - 5 2011

BROOKS KUSHMAN P.C./FGTL
1000 TOWN CENTER
22ND FLOOR
SOUTHFIELD MI 48075-1238

In re Application of	:	
Joseph STANEK et al.	:	DECISION ON PETITION
Application No. 13/026,588	:	TO MAKE SPECIAL UNDER
Filed: February 14, 2011	:	THE GREEN TECHNOLOGY
Attorney Docket No. 83161378	:	PILOT PROGRAM

This is a decision on the petitions under 37 CFR 1.102, filed March 24, 2011 to make the above-identified application special under the pilot program for applications pertaining to Green Technologies as set forth in 74 Federal Register Notice 64666 (December 8, 2009) and amended by 75 Federal Register Notice 28554 (May 21, 2010) and 75 Federal Register Notice 69049 (November 10, 2010).

The petition is **DISMISSED**.

If reconsideration of this decision is desired, a petition for reconsideration must be filed within ONE (1) MONTH OR THIRTY (30) DAYS from the mail date of this decision, whichever is longer. No extension of this time limit can be granted under 37 CFR 1.136(a) or (b). The petition for reconsideration should include an exhaustive attempt to provide the lacking item(s) noted below, since, after a decision on the petition for reconsideration, no further reconsideration or review of the matter will be undertaken by the Director.

A grantable petition to make an application special under 37 CFR 1.102 and the pilot program as set forth in 74 FR 64666 must be directed to a nonprovisional application filed under 35 USC 111(a) or be a national stage entry under 35 USC 371, exclusive of any reissue applications.

In order to qualify for special status, the following requirements must be met. 1) The application must have no more than 3 independent claims and no more than 20 total claims. 2) The application must not contain any multiple dependent claims. 3) The petition must state the basis for seeking special status, i.e., the claimed invention either: A) materially enhances the quality of the environment or B) materially contributes to: i) the discovery or development of renewable energy resources, ii) the more efficient utilization and conservation of energy resources, or iii) greenhouse gas emission reduction. 4) If the disclosure is not clear on its face that the claimed invention materially contributes under category (A) or (B), the petition must be accompanied by a statement by the applicant, assignee, or an attorney/agent registered to practice before the Office explaining

how the materiality standard is met. 5) A statement that applicant will agree to make an election without traverse in a telephonic interview if a restriction requirement is made by the examiner. 6) The petition to make special must be filed electronically. 7) The petition must be filed at least one day prior to the date that a first Office Action appears in the Patent Application Information Retrieval (PAIR) system. 8) The petition must be accompanied by a request for early publication in compliance with 37 CFR 1.219 and include the publication fee as set forth in 37 CFR 1.18(d).

The requirement for a fee for consideration of the petition to make special for applications pertaining to Green Technologies has been waived.

The petition lacks item 4.

In regard to item 4, as the auxiliary battery is discharged to operate the auxiliary loads, energy resource is being used up and the auxiliary battery is eventually needed to be charged by the traction battery to maintain a minimum level of SOC. This process shows that both the auxiliary battery and traction battery are actively used to propel the vehicle and to operate the auxiliary loads. As such, energy resources (both batteries) are not being conserved or necessarily utilized efficiently. In addition, as both batteries are used, they both emit greenhouse gases. Therefore, petitioner's statement of the claimed invention's efficient utilization/energy conservation/reduction of greenhouse gas emissions is merely speculative as there is no materiality statement presented. As stated in the notice, the materiality standard does not permit an applicant to speculate as to how a hypothetical end-user might specially apply the invention in a manner than could materially contribute to category (A) or (B). *Also see MPEP § 708.02 (VI).* Accordingly, it is not agreed that the application on its face meets that materiality standard.

Telephone inquiries concerning this decision should be directed to Lanna Mai at 571-272-6867.

The application is being forwarded to the Technology Center Art Unit 3618 for action in its regular turn.

/Lanna Mai/

Lanna Mai
Quality Assurance Specialist
Technology Center 3600

IN THE UNITED STATES PATENT AND TRADEMARK OFFICE

In re application of:

Joseph Stanek et al.

Group Art Unit: 3618

Examiner: Unknown

Serial No.: 13/026,588

Filed: February 14, 2011

For: Electric Vehicle and Method of Control for Active Auxiliary Battery Depletion

Attorney Docket No.: 83161378 (FMC 3274 PUS)

PETITION FOR RECONSIDERATION TO MAKE SPECIAL UNDER THE GREEN TECHNOLOGY PILOT PROGRAM

Commissioner for Patents
U.S. Patent and Trademark Office
P.O. Box 1450
Alexandria, VA 22313-1450

Dear Sir:

A petition under 37 CFR 1.102 to make the above-identified application special under the pilot program for applications pertaining to Green Technologies was filed on March 24, 2011 and dismissed on May 5, 2011. The Decision on Petition (May 5, 2011, p. 2) indicated:

> The petition lacks item 4.
>
> In regard to item 4, as the auxiliary battery is discharged to operate the auxiliary loads, energy resource is being used up and the auxiliary battery is eventually needed to be charged by the traction battery to maintain a minimum level of SOC. This process shows that both the auxiliary battery and traction battery are actively used to propel the vehicle and to operate the auxiliary loads. As such, energy resources (both batteries) are not being conserved or necessarily utilized efficiently. In addition, as both batteries are used, they both emit greenhouse gases. Therefore, petitioner's statement of the claimed invention's efficient utilization/energy conservation/reduction of greenhouse gas emissions is merely speculative as to how a hypothetical end-user might specially apply the invention in a manner that could materially contribute to category (A) or (B). *Also see*

MPEP 708.02(VI). Accordingly, it is not agreed that the application on its face meets that materiality standard.

In response, the Applicant submits herewith a Preliminary Amendment amending claim 11 to read as follows:

11. An electric vehicle comprising:

an electric machine;

a traction battery electrically connected with the electric machine;

an auxiliary battery; and

a controller configured to prevent the traction battery from charging the auxiliary battery while the auxiliary battery has more than a minimum energy;

wherein the controller is further configured to, upon the auxiliary battery having the minimum energy, enable the traction battery to charge the auxiliary battery such that the auxiliary battery is maintained at the minimum energy.

Claim 11 specifically recites an "electric vehicle" with "an electric machine" and "a traction battery electrically connected with the electric machine," which is vehicle structure indicative of such an alternatively powered vehicle. Hence, the invention of claim 11 materially contributes to the more efficient utilization and conservation of energy resources and greenhouse gas emission reduction. That is, electric vehicles materially contribute to the more efficient utilization and conservation of energy resources and greenhouse gas emission reduction.

The Applicant respectfully requests reconsideration of the petition filed on March 24, 2011 under 37 CFR 1.102 to make the above-identified application special under the pilot program for applications pertaining to Green Technologies.

Respectfully submitted,

Joseph Stanek et al.

By: /James N. Kallis/
James N. Kallis
Reg. No. 41,102
Attorney for Applicant

Date: June 1, 2011

BROOKS KUSHMAN P.C.
1000 Town Center, 22nd Floor
Southfield, MI 48075-1238
Phone: 248-358-4400
Fax: 248-358-3351

UNITED STATES PATENT AND TRADEMARK OFFICE

UNITED STATES DEPARTMENT OF COMMERCE
United States Patent and Trademark Office
Address: COMMISSIONER FOR PATENTS
P.O. Box 1450
Alexandria, Virginia 22313-1450
www.uspto.gov

APPLICATION NO.	FILING DATE	FIRST NAMED INVENTOR	ATTORNEY DOCKET NO.	CONFIRMATION NO.
13/026,588	02/14/2011	Joseph Stanek	83161378	5166

28395 7590 06/09/2011
BROOKS KUSHMAN P.C./FGTL
1000 TOWN CENTER
22ND FLOOR
SOUTHFIELD, MI 48075-1238

EXAMINER
COOLMAN, VAUGHN

ART UNIT	PAPER NUMBER
3618	

MAIL DATE	DELIVERY MODE
06/09/2011	PAPER

Please find below and/or attached an Office communication concerning this application or proceeding.

The time period for reply, if any, is set in the attached communication.

UNITED STATES PATENT AND TRADEMARK OFFICE

Commissioner for Patents
United States Patent and Trademark Office
P.O. Box 1450
Alexandria, VA 22313-1450
www.uspto.gov

JUN 0 9 2011

BROOKS KUSHMAN P.C./FGTL
1000 TOWN CENTER
22ND FLOOR
SOUTHFIELD MI 48075-1238

In re Application of	:	
Joseph STANEK et al.	:	DECISION ON PETITION
Application No. 13/026,588	:	TO MAKE SPECIAL UNDER
Filed: February 14, 2011	:	THE GREEN TECHNOLOGY
Attorney Docket No. 83161378	:	PILOT PROGRAM

This is a decision on the renewed petition under 37 CFR 1.102, filed June 1, 2011 to make the above-identified application special under the pilot program for applications pertaining to Green Technologies as set forth in 74 Federal Register Notice 64666 (December 8, 2009) and amended by 75 Federal Register Notice 28554 (May 21, 2010) and 75 Federal Register Notice 69049 (November 10, 2010).

The petition is **DENIED**.

A grantable petition to make an application special under 37 CFR 1.102 and the pilot program as set forth in 74 FR 64666 must be directed to a nonprovisional application filed under 35 USC 111(a) or be a national stage entry under 35 USC 371, exclusive of any reissue applications.

In order to qualify for special status, the following requirements must be met. 1) The application must have no more than 3 independent claims and no more than 20 total claims. 2) The application must not contain any multiple dependent claims. 3) The petition must state the basis for seeking special status, i.e., the claimed invention either: A) materially enhances the quality of the environment or B) materially contributes to: i) the discovery or development of renewable energy resources, ii) the more efficient utilization and conservation of energy resources, or iii) greenhouse gas emission reduction. 4) If the disclosure is not clear on its face that the claimed invention materially contributes under category (A) or (B), the petition must be accompanied by a statement by the applicant, assignee, or an attorney/agent registered to practice before the Office explaining how the materiality standard is met. 5) A statement that applicant will agree to make an election without traverse in a telephonic interview if a restriction requirement is made by the examiner. 6) The petition to make special must be filed electronically. 7) The petition must be filed at least one day prior to the date that a first Office Action appears in the Patent Application Information Retrieval (PAIR) system. 8) The petition must be accompanied by a request for early publication in compliance with 37 CFR 1.219 and include the publication fee as set forth in 37 CFR 1.18(d).

The requirement for a fee for consideration of the petition to make special for applications pertaining to Green Technologies has been waived.

The petition lacks item 4.

In regard to item 4, the amended claim 11 and petitioner's arguments have been considered. It is unclear if the electric machine, a new feature added to claim 11, has support in the original disclosure. Nonetheless, it appears that petitioner attempts to power the traction battery with an external source such as power grid. It is noted that plug-in electrical energy is typically come from power grid which uses coal to generate electricity so the traction battery of a plug-in hybrid vehicle is considered to have the same greenhouse gas emissions as coal. Whether the traction battery draws its charge from an external source or from the internal source via motor 16/generator 18, this arrangement does not make the claimed invention more energy efficient as it does not change the way the traction battery and the auxiliary battery are used to propel the vehicle and to operate the auxiliary loads. As such, energy resources (both batteries) are not being conserved or necessarily utilized efficiently. In addition, as both batteries are used, they both emit greenhouse gases. Therefore, petitioner's statement of the claimed invention's efficient utilization/energy conservation/reduction of greenhouse gas emissions is merely speculative. As stated in the notice, the materiality standard does not permit an applicant to speculate as to how a hypothetical end-user might specially apply the invention in a manner than could materially contribute to category (A) or (B). *Also see MPEP § 708.02 (VI).* Accordingly, it is not agreed that the application on its face meets that materiality standard.

Telephone inquiries concerning this decision should be directed to Lanna Mai at 571-272-6867.

The application is being forwarded to the Technology Center Art Unit 3618 for action in its regular turn.

/Lanna Mai/

Lanna Mai
Quality Assurance Specialist
Technology Center 3600

UNITED STATES PATENT AND TRADEMARK OFFICE

Commissioner for Patents
United States Patent and Trademark Office
P.O. Box 1450
Alexandria, VA 22313-1450
www.uspto.gov

BACON & THOMAS, PLLC
625 SLATERS LANE
FOURTH FLOOR
ALEXANDRIA VA 22314-1176

MAILED
APR 22 2011
OFFICE OF PETITIONS

In re Application of	:	
Kawasaki	:	
Application No. 13/026,644	:	ON PETITION
Deposited: February 14, 2011	:	
Attorney Docket No. KAWA3014D3D/JJC/JS	:	

This is in response to the "PETITION UNDER 37 C.F.R. 1.57(a) TO OFFICE ACTION OF MARCH 1, 2011" filed March 3, 2011, requesting that the above-referenced application be accorded a filing date of February 14, 2011. This petition is being treated pursuant to 37 CFR 1.53(e)(2)[1].

Application papers in the above-identified application were deposited on February 14, 2011. However, on March 1, 2011, the Office of Patent Application Processing mailed applicant a "Notice of Incomplete Nonprovisional Application," notifying applicant that the application papers had not been accorded a filing date because the application was deposited without drawings. In response, applicant timely filed this petition. Applicant requests that the application be amended to include the inadvertently omitted drawings on the basis that the application as filed contained a prior benefit claim under 37 CFR 1.55 or 1.78.

Petitioner's arguments and evidence have been considered. However, a review of the application confirms that, as filed, the application contained at least one method claim. MPEP 601.01(f) provides that:

> It has been USPTO practice to treat an application that contains at least one process or method claim as an application for which a drawing is not necessary for an understanding of the invention under 35 U.S.C. 113 (first sentence).

Thus, pursuant to § 601.01(f), a drawing is not considered essential for a filing date. The instant application is entitled to a filing date without drawings present in the application.

[1] Any request for review of a notification pursuant to paragraph (e)(1) of this section, or a notification that the original application papers lack a portion of the specification or drawing(s), must be by way of a petition pursuant to this paragraph accompanied by the fee set forth in § 1.17(f). In the absence of a timely (§ 1.181(f)) petition pursuant to this paragraph, the filing date of an application in which the applicant was notified of a filing error pursuant to paragraph (e)(1) of this section will be the date the filing error is corrected.

Accordingly, the Office should have granted the application a filing date and mailed a Notice of Omitted Items instead of a Notice of Incomplete Nonprovisional Application. As stated in MPEP 601.01(g) under the section entitled, "Application Entitled to a Filing Date," applicant may submit an amendment to include the inadvertently omitted portion of the drawing(s) pursuant to 37 CFR 1.57(a):

> [i]f an application was filed on or after September 21, 2004, and contains a claim under 37 CFR 1.55 for priority of a prior-filed foreign application, or a claim under 37 CFR 1.78 for the benefit of a prior-filed provisional, nonprovisional, or international application that was present on the filing date of the application, and the omitted portion of the drawing(s) was inadvertently omitted from the application and is completely contained in the prior-filed application[.]

Please note that no petition is required and that the amendment must comply with 37 CFR 1.57(a) and 37 CFR 1.121. See MPEP § 201.17. Any amendment to include the inadvertently omitted drawing(s) will be considered by the examiner.

To the extent the instant petition requests a filing date of February 14, 2011 with no drawings present in the application, the petition is **GRANTED**.

Given the basis for granting this petition, the petition fee is being credited to petitioner's credit card.

Pursuant to this decision, the application will be referred to Office of Patent Application Processing for:

- **correction of the filing date to February 14, 2011**;
- **for indication in Office records, as appropriate, that "0" sheets of drawings were present on filing** and
- **for issuance of a filing receipt.**

Entry of the amendment filed March 3, 2011 will be determined by the examiner.

Telephone inquiries concerning this matter may be directed to the undersigned at (571) 272-3230.

Shirene Willis Brantley

Shirene Willis Brantley
Senior Petitions Attorney
Office of Petitions

UNITED STATES PATENT AND TRADEMARK OFFICE

Commissioner for Patents
United States Patent and Trademark Office
P.O. Box 1450
Alexandria, VA 22313-1450
www.uspto.gov

MORGAN LEWIS & BOCKIUS, LLP (WA)
1111 PENNSYLVANIA AVENUE, NW
WASHINGTON, DC 20004

MAILED

MAY 16 2011

OFFICE OF PETITIONS

In re Application of :
Sung Jo Koo, et. al. :
Application No. 13/026,671 : NOTICE
Filed: February 14, 2011 :
Attorney Docket No. 065543-5069-01 :

This is a Notice regarding your "REQUEST TO CORRECT FEES AND REQUEST TO CHANGE TO LARGE ENTITY STATUS," filed on March 31, 2011 and April 13, 2011, which is being treated as a request for acceptance of a fee deficiency submission under 37 CFR 1.28(c).

The Office no longer investigates or rejects original or reissue applications under 37 CFR 1.56. 1098 Off. Gaz. Pat. Office 502 (January 3, 1989). Therefore, nothing in this Notice is intended to imply that an investigation was done.

Your fee deficiency submission under 37 CFR 1.28 is hereby **ACCEPTED**. Therefore, status as a small entity has been removed and any future fee(s) submitted must be paid at the large entity rate.

Inquiries related to this communication should be directed to the undersigned at (571) 272-3226.

Andrea Smith
Petitions Examiner
Office of Petitions

IN THE UNITED STATES PATENT AND TRADEMARK OFFICE

APPLICANTS:	McBride *et al.*		
SERIAL NO.:	Not yet assigned	GROUP NO.:	Not yet assigned
FILING DATE:	Herewith	EXAMINER:	Not yet assigned
TITLE:	SYSTEMS AND METHODS FOR COMPRESSED-GAS ENERGY STORAGE USING COUPLED CYLINDER ASSEMBLIES		

Commissioner for Patents
P.O. Box 1450
Alexandria, VA 22313-1450

STATEMENTS OF SPECIAL STATUS AND MATERIALITY IN SUPPORT OF PETITION TO MAKE SPECIAL UNDER THE GREEN TECHNOLOGY PILOT PROGRAM

In accordance with the Federal Register notices published December 8, 2009, May 21, 2010, and November 10, 2010, Applicants hereby request to participate in the Green Technology Pilot Program for the above-identified application. Applicants submit that the invention claimed in the above-identified application materially contributes to the development of renewable energy resources and the conservation of energy resources at least because the invention solves a persistent problem with intermittent energy-generation systems (e.g., wind and solar renewable energy) by providing systems for storing and recovering the energy from these sources, thereby making them deployable on a widespread and practical basis – thereby enhancing and promoting the deployment of such systems. Thus, the claimed invention directly contributes to the conservation of energy resources by increasing the practicality and acceptance of renewable energy sources, thereby enabling them to replace fossil-fuel-dependent energy sources.

Specifically, the claimed energy storage and recovery method represents an important step in the conversion of clean energy stored in the form of compressed gas into, e.g., usable electricity and vice versa. The gas is expanded and/or compressed via reciprocal motion (e.g., of a pneumatic cylinder piston), and the reciprocal motion arises from or is converted to rotary motion (e.g., of a motor/generator, thereby consuming or generating electricity). Furthermore, heat is exchanged with the gas in order to maintain the gas at a substantially constant temperature, thereby increasing efficiency of the energy recovery and storage.

The claimed method thus encompasses direct conversion of the rotary motion of a motor/generator (e.g., powered by the wind turbine or solar cell) into the linear gas-compressing motion of a pneumatic cylinder assembly, storing clean energy in the form of compressed gas. The stored clean energy may be recovered via, e.g., direct operation of the motor/generator by the pneumatic cylinder assembly (and an intermediate transmission mechanism). Advantageously, in many embodiments no hydraulic systems are required between the pneumatic cylinder assembly and the motor generator, eliminating the need for hydraulic liquids that may be harmful to the environment, and enabling the broader deployment of renewable-energy systems and compressed-gas energy storage systems.

Applicants believe no additional fees are necessitated by the filing of this paper. However, if any additional fee is due, please charge said fee occasioned by this paper to our Deposit Account No. 50-4047.

Respectfully submitted,

Date: February 14, 2011
Reg. No. 58,533

Electronic Signature: /Matthew T. Currie/
Matthew T. Currie
Attorney for Applicants
Bingham McCutchen LLP
One Federal Street
Boston, Massachusetts 02110

Tel. No.: (617) 951-8293
Fax No.: (617) 951-8736

Doc Code: PET.GREEN
Document Description: Petition for Green Tech Pilot

PTO/SB/420 (05-10)
Approved for use through 05/31/2010. OMB 0651-0062
U.S. Patent and Trademark Office; U.S. DEPARTMENT OF COMMERCE
Under the Paperwork Reduction Act of 1995, no persons are required to respond to a collection of information unless it displays a valid OMB control number.

PETITION TO MAKE SPECIAL UNDER THE GREEN TECHNOLOGY PILOT PROGRAM

Attorney Docket Number:	SUS-023C1/ 7301093001	Application Number (if known):	Filing date: Herewith
First Named Inventor:	Troy O. McBride		
Title:	SYSTEMS AND METHODS FOR COMPRESSED-GAS ENERGY STORAGE USING COUPLED CYLINDER ASSEMBLIES		

APPLICANT HEREBY REQUESTS TO PARTICIPATE IN THE GREEN TECHNOLOGY PILOT PROGRAM FOR THE ABOVE-IDENTIFIED APPLICATION. See Instruction Sheet on page 2.

This petition must be timely filed electronically using the USPTO electronic filing system, EFS-Web.

1. By filing this petition:

   Applicant is requesting early publication: Applicant hereby requests early publication under 37 CFR 1.219 and the publication fee set forth in 37 CFR 1.18(d) accompanies this request.

2. By filing this petition: applicant is agreeing to make an election without traverse in a telephonic interview and elect an invention that meets the eligibility requirements set forth in the notice titled "Pilot Program for Green Technologies Including Greenhouse Gas Reduction," as modified by the notice titled "Elimination of Classification Requirement in the Green Technology Pilot Program," each of which was published in the Federal Register, if the Office determines that the claims are not obviously directed to a single invention.

3. This request is accompanied by statements of special status for the eligibility requirement.

4. The application contains no more than three (3) independent claims and twenty (20) total claims.

5. The application does not contain any multiple dependent claims

6. Other attachments: Preliminary Amendment
   Statement of Special Status

Signature	/Matthew T. Currie/	Date	February 14, 2011
Name (Print/Typed)	Matthew T. Currie	Registration Number	58,533

***Note**: Signatures of all the inventors or assignees of record of the entire interest or their representative(s) are required in accordance with 37 CFR 1.33 and 11.18. Please see 37 CFR 1.4(d) for the form of the signature. If necessary, submit multiple forms if more than one signature, see below*.*

☐ *Total of 1 forms are submitted.

UNITED STATES PATENT AND TRADEMARK OFFICE

UNITED STATES DEPARTMENT OF COMMERCE
United States Patent and Trademark Office
Address: COMMISSIONER FOR PATENTS
P.O. Box 1450
Alexandria, Virginia 22313-1450
www.uspto.gov

APPLICATION NO.	FILING DATE	FIRST NAMED INVENTOR	ATTORNEY DOCKET NO.	CONFIRMATION NO.
13/026,677	02/14/2011	Troy O. McBride	SUS-023C1/7301093001	5318

23517 7590 03/08/2011
BINGHAM MCCUTCHEN LLP
2020 K Street, N.W.
Intellectual Property Department
WASHINGTON, DC 20006

EXAMINER

ART UNIT	PAPER NUMBER
2878	

MAIL DATE	DELIVERY MODE
03/08/2011	PAPER

Please find below and/or attached an Office communication concerning this application or proceeding.

The time period for reply, if any, is set in the attached communication.

UNITED STATES PATENT AND TRADEMARK OFFICE

Commissioner for Patents
United States Patent and Trademark Office
P.O. Box 1450
Alexandria, VA 22313-1450
www.uspto.gov

BINGHAM MCCUTCHEN LLP
2020 K Street, N.W.
Intellectual Property Department
WASHINGTON DC 20006

In re Application of	:	
MCBRIBE et al.	:	DECISION ON PETITION
Application No. 13/026,677	:	TO MAKE SPECIAL UNDER
Filed: February 14, 2011	:	THE GREEN TECHNOLOGY
Attorney Docket No. SUS-023C1/7301093001	:	PILOT PROGRAM

This is a decision on the petition under 37 CFR 1.102, filed on February 14, 2011, to make the above-identified application special under the pilot program for applications pertaining to Green Technologies as set forth 74 Federal Register Notice 64666 (December 8, 2009) and amended by 75 Federal Register Notice 28554 (May 21, 2010) and 75 Federal Register Notice 69049 (November 10, 2010).

The petition is **DISMISSED**.

If reconsideration of this decision is desired, a petition for reconsideration must be filed within ONE (1) MONTH OR THIRTY (30) DAYS from the mail date of this decision, whichever is longer. No extension of this time limit can be granted under 37 CFR 1.136(a) or (b). The petition for reconsideration should include an exhaustive attempt to provide the lacking item(s) noted below, since, after a decision on the petition for reconsideration, no further reconsideration or review of the matter will be undertaken by the Director.

A grantable petition to make an application special under 37 CFR 1.102 and the pilot program as set forth in 74 FR 64666 must be directed to a nonprovisional application filed under 35 USC 111(a) or be a national stage entry under 35 USC 371, exclusive of any reissue applications and be filed prior to the date of the notice, December 8, 2009.

In order to qualify for special status, the following requirements must be met. 1) The application must have no more than 3 independent claims and no more than 20 total claims. 2) The application must not contain any multiple dependent claims. 3) The petition must state the basis for seeking special status, i.e., the claimed invention either: A) materially enhances the quality of the environment or B) materially contributes to: i) the discovery or development of renewable energy resources, ii) the more efficient utilization and conservation of energy resources, or iii) greenhouse gas emission reduction. 4) If the disclosure is not clear on its face that the claimed invention materially contributes under category (A) or (B), the petition must be accompanied by a statement by the applicant, assignee, or an attorney/agent registered to practice before the

Office explaining how the materiality standard is met. 5) A statement that applicant will agree to make an election without traverse in a telephonic interview if a restriction requirement is made by the examiner. 6) The petition to make special must be filed electronically. 7) The petition must be filed at least one day prior to the date that a first Office Action appears in the Patent Application Information Retrieval (PAIR) system. 8) The petition must be accompanied by a request for early publication in compliance with 37 CFR 1.219 and include the publication fee as set forth in 37 CFR 1.18(d).

The requirement for a fee for consideration of the petition to make special for applications pertaining to Green Technologies has been waived.

The petition lacks item 4.

In regard to item 4, applicant's statement pertaining to how the materiality standard is met does not satisfy the requirements for this pilot. The instant petition includes a statement identifying the basis for the special status as contributing to the development of renewable energy resources and conservation of energy. Regarding the development of renewable energy resources statement, the materiality standard does not permit an applicant to speculate as to how a hypothetical end-user might specially apply the invention in a manner that could contribute to the development of renewable energy resources. Any argument that the claimed invention can be used with wind and solar energy is considered speculate as to how a hypothetical end-user might specially apply the claimed invention. Energy conservation alone is not a materiality standard for this pilot. One of the materiality standards for the pilot is more efficient utilization and conservation of energy. It is readily apparent how storage and recovery of energy meets the requirement for more efficient utilization of energy.

Any reconsideration of this decision should be submitted through the USPTO electronic filing system, EFS-Web, and selecting the document description of "Petition for Green Tech Pilot" on the EFS-Web screen.

Telephone inquiries concerning this decision should be directed to Lee W. Young at 571-272-4549.

The application is being forwarded to the Technology Center Art Unit 2878 for action in its regular turn.

Lee W. Young
Quality Assurance Specialist
Technology Center 2800

IN THE UNITED STATES PATENT AND TRADEMARK OFFICE

APPLICANTS:	McBride *et al.*		
SERIAL NO.:	13/026,677	GROUP NO.:	2878
FILING DATE:	February 14, 2011	EXAMINER:	Not yet assigned
TITLE:	SYSTEMS AND METHODS FOR COMPRESSED-GAS ENERGY STORAGE USING COUPLED CYLINDER ASSEMBLIES		

Commissioner for Patents
P.O. Box 1450
Alexandria, VA 22313-1450

REQUEST FOR RECONSIDERATION OF PETITION TO MAKE SPECIAL UNDER THE GREEN TECHNOLOGY PILOT PROGRAM

Applicants hereby request reconsideration of the decision to dismiss Applicants' petition to make special filed on February 14, 2011. The March 8, 2011 decision indicated that the statement of materiality in the original petition failed to satisfy the requirements of the program. Applicants submit that the invention claimed in the above-identified application materially contributes to the development of renewable energy resources and the conservation of energy resources at least because the invention solves a persistent problem with intermittent energy-generation systems (e.g., wind and solar renewable energy) by providing systems for storing and recovering the energy from these sources, thereby making them deployable on a widespread and practical basis – thereby enhancing and promoting the deployment of such systems. Thus, the claimed invention directly contributes to the conservation of energy resources by increasing the practicality and acceptance of renewable energy sources, thereby enabling them to replace fossil-fuel-dependent energy sources.

Specifically, the claimed energy storage and recovery method represents an important step in the conversion of clean energy stored in the form of compressed gas into, e.g., usable electricity and vice versa. The gas is expanded and/or compressed via reciprocal motion (e.g., of a pneumatic cylinder piston), and the reciprocal motion arises from or is converted to rotary motion (e.g., of a motor/generator, thereby consuming or generating electricity). Furthermore, heat is exchanged with the gas in order to maintain the gas at a substantially constant temperature, thereby increasing efficiency of the energy recovery and storage. As demonstrated

by dependent claim 61, the claimed method encompasses storage of energy originating from an intermittent renewable energy source of wind or solar energy and recovery of energy when the intermittent renewable energy source is nonfunctional. Thus, power demands are addressed consistently, regardless of the energy output of the renewable energy source at any particular time.

Accordingly, Applicants respectfully request reconsideration and grant of the original Petition to Make Special and that the application undergo accelerated examination. Applicants believe that no fee is required with this request for reconsideration; however, in the event that the Applicants are mistaken, the Director is hereby authorized to charge any fees that should have been filed herewith to our Deposit Account No. 50-4047.

Respectfully submitted,

Date: March 23, 2011
Reg. No. 58,533

Electronic Signature: /Matthew T. Currie/
Matthew T. Currie
Attorney for Applicants
Bingham McCutchen LLP
One Federal Street
Boston, Massachusetts 02110

Tel. No.: (617) 951-8293
Fax No.: (617) 951-8736

UNITED STATES PATENT AND TRADEMARK OFFICE

UNITED STATES DEPARTMENT OF COMMERCE
United States Patent and Trademark Office
Address: COMMISSIONER FOR PATENTS
P.O. Box 1450
Alexandria, Virginia 22313-1450
www.uspto.gov

APPLICATION NO.	FILING DATE	FIRST NAMED INVENTOR	ATTORNEY DOCKET NO.	CONFIRMATION NO.
13/026,677	02/14/2011	Troy O. McBride	SUS-023C1/7301093001	5318

23517 7590 04/14/2011
BINGHAM MCCUTCHEN LLP
2020 K Street, N.W.
Intellectual Property Department
WASHINGTON, DC 20006

EXAMINER

ART UNIT	PAPER NUMBER
3745	

MAIL DATE	DELIVERY MODE
04/14/2011	PAPER

Please find below and/or attached an Office communication concerning this application or proceeding.

The time period for reply, if any, is set in the attached communication.

UNITED STATES PATENT AND TRADEMARK OFFICE

Commissioner for Patents
United States Patent and Trademark Office
P.O. Box 1450
Alexandria, VA 22313-1450
www.uspto.gov

BINGHAM MCCUTCHEN LLP
2020 K Street, N.W.
Intellectual Property Department
WASHINGTON DC 20006

In re Application of	:	
MCBRIDE, TROY O. et al	:	DECISION ON PETITION
Application No. 13/026,677	:	TO MAKE SPECIAL UNDER
Filed: Feb. 14, 2011	:	THE GREEN TECHNOLOGY
Attorney Docket No. SUS-023C1/7301093001	:	PILOT PROGRAM

This is a decision on the renewed petition under 37 CFR 1.102, filed March 23, 2011 to make the above-identified application special under the pilot program for applications pertaining to Green Technologies as set forth in 74 Federal Register Notice 64666 (December 8, 2009) and amended by 75 Federal Register Notice 28554 (May 21, 2010) and 75 Federal Register Notice 69049 (November 10, 2010).

The petition is **GRANTED.**

If reconsideration of this decision is desired, a petition for reconsideration must be filed within ONE (1) MONTH OR THIRTY (30) DAYS from the mail date of this decision, whichever is longer. No extension of this time limit can be granted under 37 CFR 1.136(a) or (b). The petition for reconsideration should include an exhaustive attempt to provide the lacking item(s) noted below, since, after a decision on the petition for reconsideration, no further reconsideration or review of the matter will be undertaken by the Director.

A grantable petition to make an application special under 37 CFR 1.102 and the pilot program as set forth in 74 FR 64666 must be directed to a nonprovisional application filed under 35 USC 111(a) or be a national stage entry under 35 USC 371, exclusive of any reissue applications.

In order to qualify for special status, the following requirements must be met. 1) The application must have no more than 3 independent claims and no more than 20 total claims. 2) The application must not contain any multiple dependent claims. 3) The petition must state the basis for seeking special status, i.e., the claimed invention either: A) materially enhances the quality of the environment or B) materially contributes to: i) the discovery or development of renewable energy resources, ii) the more efficient utilization and conservation of energy resources, or iii) greenhouse gas emission reduction. 4) If the disclosure is not clear on its face that the claimed invention materially contributes under category (A) or (B), the petition must be accompanied by a statement by the applicant, assignee, or an attorney/agent registered to practice before the

Office explaining how the materiality standard is met. 5) A statement that applicant will agree to make an election without traverse in a telephonic interview if a restriction requirement is made by the examiner. 6) The petition to make special must be filed electronically. 7) The petition must be filed at least one day prior to the date that a first Office Action appears in the Patent Application Information Retrieval (PAIR) system. 8) The petition must be accompanied by a request for early publication in compliance with 37 CFR 1.219 and include the publication fee as set forth in 37 CFR 1.18(d).

The requirement for a fee for consideration of the petition to make special for applications pertaining to Green Technologies has been waived.

The instant petition complies with items 1 – 8 above. Accordingly, the above-identified application has been accorded "special" status.

Telephone inquires concerning this decision should be directed to Henry C. Yuen at 571-272-4856.

This application will be forwarded to the Technology Center Art Unit 3745 for action on the merits commensurate with this decision.

/Henry C. Yuen/

Henry C. Yuen
Quality Assurance Specialist
Technology Center TC 3700

UNITED STATES PATENT AND TRADEMARK OFFICE

UNITED STATES DEPARTMENT OF COMMERCE
United States Patent and Trademark Office
Address: COMMISSIONER FOR PATENTS
P.O. Box 1450
Alexandria, Virginia 22313-1450
www.uspto.gov

APPLICATION NO.	FILING DATE	FIRST NAMED INVENTOR	ATTORNEY DOCKET NO.	CONFIRMATION NO.
13/026,753	02/14/2011	Hideki TANAKA	27313Z	5473

23389 7590 07/11/2011
SCULLY SCOTT MURPHY & PRESSER, PC
400 GARDEN CITY PLAZA
SUITE 300
GARDEN CITY, NY 11530

EXAMINER

ART UNIT	PAPER NUMBER
3739	

MAIL DATE	DELIVERY MODE
07/11/2011	PAPER

Please find below and/or attached an Office communication concerning this application or proceeding.

The time period for reply, if any, is set in the attached communication.

UNITED STATES PATENT AND TRADEMARK OFFICE

Commissioner for Patents
United States Patent and Trademark Office
P.O. Box 1450
Alexandria, VA 22313-1450
www.uspto.gov

SCULLY SCOTT MURPHY & PRESSER, PC
400 GARDEN CITY PLAZA
SUITE 300
GARDEN CITY NY 11530

In re Application of: TANAKA, HIDEKI Serial No.: 13/026753 Filed: February 14, 2011 Attorney Docket No. : 27313Z Title: ENDOSCOPE APPARATUS	DECISION ON A REQUEST TO PARTICIPATE IN PATENT PROSECUTION HIGHWAY PROGRAM AND PETITION TO MAKE SPECIAL UNDER CFR 1.102(a)

This is a decision on the request to participate in the Patent Prosecution Highway (PPH) program and the petition under 37 CFR 1.102(a), filed June 20, 2011 to make the above-identified application special.

The request and petition are **granted.**

A grantable request to participate in the PPH program and petition to make special require:

(1) The U.S. application must validly claim priority under 35 U.S.C. 119(a) to one or more corresponding application(s) filed in the JPO;
(2) Applicant must submit a copy of the allowable/patentable claim(s) from the JPO application(s) along with an English translation thereof and a statement that the English translation is accurate;
(3) All the claims in the U.S. application must sufficiently correspond or be amended to sufficiently correspond to the allowable/patentable claim(s) in the JPO application(s);
(4) Examination of the U.S. application has not begun;
(5) Applicant must submit a copy of all the office actions from each of the JPO application(s) containing the allowable/patentable claim(s) along with an English translation thereof and a statement that the English translation is accurate; and
(6) Applicant must submit IDS listing the documents cited by the JPO examiner in the JPO office action along with copies of documents except U.S. patents or U.S. patent application publications.

In light of the petition being properly submitted, the request to participate in the PPH program and the petition comply with the above requirements. Accordingly, the above-identified application has been accorded "special" status.

The applicant is encouraged to cite and submit all relevant prior art references, if any, to facilitate examination in this application.

Response must be filed via EFS-Web. Telephone inquiries concerning this decision should be directed to Henry C. Yuen, at 571-272-4856.

Petition is **granted**.

/Henry C. Yuen/

Henry C. Yuen
Special Programs Examiner
Technology Center 3700
Tel: 571-272-4856

UNITED STATES PATENT AND TRADEMARK OFFICE

Commissioner for Patents
United States Patent and Trademark Office
P.O. Box 1450
Alexandria, VA 22313-1450
www.uspto.gov

SCULLY SCOTT MURPHY & PRESSER, PC
400 GARDEN CITY PLAZA
SUITE 300
GARDEN CITY NY 11530

MAILED
MAR 09 2012
OFFICE OF PETITIONS

In re Application of
Hideki TANAKA
Application No.: 13/026,784
Filed: February 14, 2011
Attorney Docket No.: 27310Z
For: ENDOSCOPE APPARATUS AND BENDING DRIVE CONTROL METHOD

: DECISION ON REQUEST TO
: PARTICIPATE IN THE PATENT
: PROSECUTION HIGHWAY
: PROGRAM AND PETITION
: TO MAKE SPECIAL UNDER
: 37 CFR 1.102(a)

This is a decision on the request to participate in the Patent Prosecution Highway (PPH) program and the petition under 37 CFR 1.102(a), filed January 03, 2012, to make the above-identified application special.

The request and petition are **GRANTED**.

Discussion

A grantable request to participate in the PPH pilot program and petition to make special require:

1. The U.S. application is

    a. a Paris Convention application which either
        i. validly claims priority under 35 U.S.C. 119(a) and 37 CFR 1.55 to one or more applications filed in the JPO, or
        ii. validly claims priority to a PCT application that contains no priority claims, or
    b. a national stage application under the PCT (an application which entered the national stage in the U.S. from a PCT international application after compliance with 35 U.S.C. 371), which PCT application
        i. validly claims priority to an application filed in the JPO, or
        ii. validly claims priority to a PCT application that contains no priority claims, or
        iii. contains no priority claim, or
    c. a so-called bypass application filed under 35 U.S.C. 111(a) which validly claims benefit under 35 U.S.C. 120 to a PCT application, which PCT application
        i. validly claims priority to an application filed in the JPO, or
        ii. validly claims priority to a PCT application that contains no priority claims, or
        iii. contains no priority claim;

2. Applicant must submit a copy of:
    a. The allowable/patentable claim(s) from the JPO application(s);
    b. An English translation of the allowable/patentable claim(s) and
    c. A statement that the English translation is accurate;
3. Applicant must:
    a. Ensure all the claims in the U.S. application must sufficiently correspond or be amended to sufficiently correspond to the allowable/patentable claim(s) in the JPO application(s) and
    b. Submit a claims correspondence table in English;
4. Examination of the U.S. application has not begun;
5. Applicant must submit:
    a. Documentation of prior office action:
        i. a copy of the office action(s) just prior to the "Decision to Grant a Patent" from each of the JPO application(s) containing the allowable/patentable claim(s) or
        ii. if the allowable/patentable claims(s) are from a "Notification of Reasons for Refusal" then the Notification of Reasons for Refusal or
        iii. if the JPO application is a first action allowance then no office action from the JPO is necessary should be indicated on the request/petition form;
    b. An English language translation of the JPO Office action from (5)(a)(i)-(ii) above
    c. A statement that the English translation is accurate;
6. Applicant must submit:
    a. An IDS listing the documents cited by the JPO examiner in the JPO office action (unless already submitted in this application)
    b. Copies of the documents except U.S. patents or U.S. patent application publications (unless already submitted in this application);

The request to participate in the PPH pilot program and petition comply with the above requirements. Accordingly, the above-identified application has been accorded "special" status.

Inquiries concerning this decision should be directed to Michelle R. Eason at 571-272-4231.

All other inquiries concerning the examination or status of the application is accessible in the PAIR system at http://www.uspto.gov/ebc.index.html.

This application will be forwarded to the examiner for action on the merits commensurate with this decision.

Thurman K. Page
Petitions Examiner
Office of Petitions

Doc Code: PET.GREEN
Document Description: Petition for Green Tech Pilot

PTO/SB/420 (03-11)

PETITION TO MAKE SPECIAL UNDER THE GREEN TECHNOLOGY PILOT PROGRAM

Attorney Docket Number: LS00026US	Application Number (if known): 13/026,871	Filing date: February 14, 2011
First Named Inventor: RUDE, Mathew		
Title: SURFACTANTS AND DETERGENT COMPOSITIONS COMPRISING MICROBIALLY PRODUCED BRANCED FATTY ALCOHOLS		

APPLICANT HEREBY REQUESTS TO PARTICIPATE IN THE GREEN TECHNOLOGY PILOT PROGRAM FOR THE ABOVE-IDENTIFIED APPLICATION. See Instruction Sheet on page 2.

This petition must be timely filed electronically using the USPTO electronic filing system, EFS-Web.

1. By filing this petition:

   Applicant is requesting early publication: Applicant hereby requests early publication under 37 CFR 1.219 and the publication fee set forth in 37 CFR 1.18(d) accompanies this request.

2. By filing this petition: applicant is agreeing to make an election without traverse in a telephonic interview and elect an invention that meets the eligibility requirements for the Green Technology Pilot Program, if the Office determines that the claims are not obviously directed to a single invention. See Instruction Sheet.

3. This request is accompanied by statements of special status for the eligibility requirement.

4. The application contains no more than three (3) independent claims and twenty (20) total claims.

5. The application does not contain any multiple dependent claims.

6. Other attachments: 1) Statements of Special Status for the Eligibility Requirements; 2) Preliminary Amendment

Signature	Date December 20, 2011
Name (Print/Typed) Linda R. Judge	Registration Number 42,702

***Note**: Signatures of all the inventors or assignees of record of the entire interest or their representative(s) are required in accordance with 37 CFR 1.33 and 11.18. Please see 37 CFR 1.4(d) for the form of the signature. If necessary, submit multiple forms for more than one signature, see below*.*

☐ *Total of _____ forms are submitted.

If you need assistance in completing the form, call 1-800-PTO-9199 and select option 2.

UNITED STATES PATENT AND TRADEMARK OFFICE

UNITED STATES DEPARTMENT OF COMMERCE
United States Patent and Trademark Office
Address: COMMISSIONER FOR PATENTS
P.O. Box 1450
Alexandria, Virginia 22313-1450
www.uspto.gov

APPLICATION NO.	FILING DATE	FIRST NAMED INVENTOR	ATTORNEY DOCKET NO.	CONFIRMATION NO.
13/026,871	02/14/2011	Mathew Rude	LS00026 US	5706

80782 7590 01/23/2012
LS9, Inc.
600 Gateway Boulevard
South San Francisco, CA 94080

EXAMINER

ART UNIT	PAPER NUMBER
1615	

NOTIFICATION DATE	DELIVERY MODE
01/23/2012	ELECTRONIC

Please find below and/or attached an Office communication concerning this application or proceeding.

The time period for reply, if any, is set in the attached communication.

Notice of the Office communication was sent electronically on above-indicated "Notification Date" to the following e-mail address(es):

chgpatent@leydig.com
ljudge@ls9.com

UNITED STATES PATENT AND TRADEMARK OFFICE

Commissioner for Patents
United States Patent and Trademark Office
P.O. Box 1450
Alexandria, VA 22313-1450
www.uspto.gov

JAN 23 2012

LS9, Inc.
600 Gateway Boulevard
South San Francisco CA 94080

In re Application of	:	
RUDE, Mathew *et al.*	:	DECISION ON PETITION
Application No. 13/026871	:	TO MAKE SPECIAL UNDER
Filed: February 14, 2011	:	THE GREEN TECHNOLOGY
Attorney Docket No. LS00026 US	:	PILOT PROGRAM

This is a decision on the petition under 37 CFR 1.102, filed December 20, 2011, to make the above-identified application special under the pilot program for applications pertaining to Green Technologies as set forth in 74 Federal Register Notice 64666 (December 8, 2009) and amended by 75 Federal Register Notice 28554 (May 21, 2010) and 75 Federal Register Notice 69049 (November 10, 2010).

The petition is **GRANTED**.

A grantable petition to make an application special under 37 CFR 1.102 and the pilot program as set forth in 74 FR 64666 must be directed to a nonprovisional application filed under 35 USC 111(a) or be a national stage entry under 35 USC 371, exclusive of any reissue applications.

In order to qualify for special status, the following requirements must be met. 1) The application must have no more than 3 independent claims and no more than 20 total claims. 2) The application must not contain any multiple dependent claims. 3) The petition must state the basis for seeking special status, i.e., the claimed invention either: A) materially enhances the quality of the environment or B) materially contributes to: i) the discovery or development of renewable energy resources, ii) the more efficient utilization and conservation of energy resources, or iii) greenhouse gas emission reduction. 4) If the disclosure is not clear on its face that the claimed invention materially contributes under category (A) or (B), the petition must be accompanied by a statement by the applicant, assignee, or an attorney/agent registered to practice before the Office explaining how the materiality standard is met. 5) A statement that applicant will agree to make an election without traverse in a telephonic interview if a restriction requirement is made by the examiner. 6) The petition to make special must be filed electronically. 7) The petition must be filed at least one day prior to the date that a first Office Action appears in the Patent Application Information Retrieval (PAIR) system. 8) The petition must be accompanied by a request for early publication in compliance with 37 CFR 1.219 and include the publication fee as set forth in 37 CFR 1.18(d).

The requirement for a fee for consideration of the petition to make special for applications pertaining to Green Technologies has been waived.

The instant petition complies with items 1 – 8 above. Accordingly, the above-identified application has been accorded "special" status.

Telephone inquires concerning this decision should be directed to Manjunath Rao at 571-272-0939.

The application is being forwarded to the Technology Center Art Unit 1615 for action on the merits commensurate with this decision.

/Manjunath Rao/

Manjunath Rao
Supervisory Patent Examiner &
POC for TC 1600 Green Tech Petitions
Technology Center 1600

IN THE UNITED STATES PATENT AND TRADEMARK OFFICE

APPLICANTS:	Pitera *et al.*		
SERIAL NO.:	Not yet assigned	GROUP NO.:	Not yet assigned
FILING DATE:	Herewith	EXAMINER:	Not yet assigned
TITLE:	METHODS OF FORMING HIGH-EFFICIENCY MULTI-JUNCTION SOLAR CELL STRUCTURES		

Commissioner for Patents
P.O. Box 1450
Alexandria, VA 22313-1450

STATEMENT OF SPECIAL STATUS IN SUPPORT OF PETITION TO MAKE SPECIAL UNDER THE GREEN TECHNOLOGY PILOT PROGRAM

In accordance with the Federal Register notices published December 8, 2009, May 21, 2010, and November 10, 2010, Applicants hereby request to participate in the Green Technology Pilot Program for the above-identified application. Applicants submit that the invention claimed in the above-identified application materially contributes to the development of renewable energy resources and energy conservation. Specifically, the invention relates to high-efficiency solar cells that convert solar energy into electrical energy and that are suitable for a host of applications. Applicants believe no additional fees are necessitated by the filing of this paper. However, if any additional fee is due, please charge said fee occasioned by this paper to our Deposit Account No. 50-4047.

Respectfully submitted,

Date: February 14, 2011
Reg. No. 58,533

Electronic Signature: /Matthew T. Currie/
Matthew T. Currie
Attorney for Applicants
Bingham McCutchen LLP
One Federal Street
Boston, Massachusetts 02110

Tel. No.: (617) 951-8293
Fax No.: (617) 951-8736

Doc Code: PET.GREEN
Document Description: Petition for Green Tech Pilot

PTO/SB/420 (05-10)
Approved for use through 05/31/2010. OMB 0651-0062
U.S. Patent and Trademark Office; U.S. DEPARTMENT OF COMMERCE
Under the Paperwork Reduction Act of 1995, no persons are required to respond to a collection of information unless it displays a valid OMB control number.

PETITION TO MAKE SPECIAL UNDER THE GREEN TECHNOLOGY PILOT PROGRAM

Attorney Docket Number: PWR-002BC1/7304033001	Application Number (if known):	Filing date: Herewith
First Named Inventor: Arthur J. Pitera		
Title: METHODS OF FORMING HIGH-EFFICIENCY MULTI-JUNCTION SOLAR CELL STRUCTURES		

APPLICANT HEREBY REQUESTS TO PARTICIPATE IN THE GREEN TECHNOLOGY PILOT PROGRAM FOR THE ABOVE-IDENTIFIED APPLICATION. See Instruction Sheet on page 2.

This petition must be timely filed electronically using the USPTO electronic filing system, EFS-Web.

1. By filing this petition:

   Applicant is requesting early publication: Applicant hereby requests early publication under 37 CFR 1.219 and the publication fee set forth in 37 CFR 1.18(d) accompanies this request.

2. By filing this petition: applicant is agreeing to make an election without traverse in a telephonic interview and elect an invention that meets the eligibility requirements set forth in the notice titled "Pilot Program for Green Technologies Including Greenhouse Gas Reduction," as modified by the notice titled "Elimination of Classification Requirement in the Green Technology Pilot Program," each of which was published in the Federal Register, if the Office determines that the claims are not obviously directed to a single invention.

3. This request is accompanied by statements of special status for the eligibility requirement.

4. The application contains no more than three (3) independent claims and twenty (20) total claims.

5. The application does not contain any multiple dependent claims

6. Other attachments: Preliminary Amendment
   Statement of Special Status

Signature /Matthew T. Currie/	Date February 14, 2011
Name (Print/Typed) Matthew T. Currie	Registration Number 58,533

***Note**: Signatures of all the inventors or assignees of record of the entire interest or their representative(s) are required in accordance with 37 CFR 1.33 and 11.18. Please see 37 CFR 1.4(d) for the form of the signature. If necessary, submit multiple forms if more than one signature, see below*.*

☐ *Total of 1 forms are submitted.

UNITED STATES PATENT AND TRADEMARK OFFICE

UNITED STATES DEPARTMENT OF COMMERCE
United States Patent and Trademark Office
Address: COMMISSIONER FOR PATENTS
P.O. Box 1450
Alexandria, Virginia 22313-1450
www.uspto.gov

APPLICATION NO.	FILING DATE	FIRST NAMED INVENTOR	ATTORNEY DOCKET NO.	CONFIRMATION NO.
13/026,882	02/14/2011	Arthur J. Pitera	PWR-002BC1/7301033001	5728

7590 03/08/2011
Bingham McCutchen LLP
2020 K Street, NW
Washington, DC 20006

EXAMINER

ART UNIT	PAPER NUMBER
2822	

MAIL DATE	DELIVERY MODE
03/08/2011	PAPER

Please find below and/or attached an Office communication concerning this application or proceeding.

The time period for reply, if any, is set in the attached communication.

UNITED STATES PATENT AND TRADEMARK OFFICE

Commissioner for Patents
United States Patent and Trademark Office
P.O. Box 1450
Alexandria, VA 22313-1450
www.uspto.gov

Bingham McCutchen LLP
2020 K Street, NW
Washington DC 20006

In re Application of	:	
PITERA et al.	:	DECISION ON PETITION
Application No. 13/026,882	:	TO MAKE SPECIAL UNDER
Filed: February 14, 2011	:	THE GREEN TECHNOLOGY
Attorney Docket No. PWR-002BC1/7301033001	:	PILOT PROGRAM

This is a decision on the petition under 37 CFR 1.102, filed February 14, 2011, to make the above-identified application special under the pilot program for applications pertaining to Green Technologies as set forth 74 Federal Register Notice 64666 (December 8, 2009) and amended by 75 Federal Register Notice 28554 (May 21, 2010) and 75 Federal Register Notice 69049 (November 10, 2010).

The petition is **GRANTED**.

A grantable petition to make an application special under 37 CFR 1.102 and the pilot program as set forth in 74 FR 64666 must be directed to a nonprovisional application filed under 35 USC 111(a) or be a national stage entry under 35 USC 371, exclusive of any reissue applications.

In order to qualify for special status, the following requirements must be met. 1) The application must have no more than 3 independent claims and no more than 20 total claims. 2) The application must not contain any multiple dependent claims. 3) The petition must state the basis for seeking special status, i.e., the claimed invention either: A) materially enhances the quality of the environment or B) materially contributes to: i) the discovery or development of renewable energy resources, ii) the more efficient utilization and conservation of energy resources, or iii) greenhouse gas emission reduction. 4) If the disclosure is not clear on its face that the claimed invention materially contributes under category (A) or (B), the petition must be accompanied by a statement by the applicant, assignee, or an attorney/agent registered to practice before the Office explaining how the materiality standard is met. 5) A statement that applicant will agree to make an election without traverse in a telephonic interview if a restriction requirement is made by the examiner. 6) The petition to make special must be filed electronically. 7) The petition must be filed at least one day prior to the date that a first Office Action appears in the Patent Application Information Retrieval (PAIR) system. 8) The petition must be accompanied by a request for early publication in compliance with 37 CFR 1.219 and include the publication fee as set forth in 37 CFR 1.18(d).

The requirement for a fee for consideration of the petition to make special for applications pertaining to Green Technologies has been waived.

The instant petition complies with items 1 – 8 above. Accordingly, the above-identified application has been accorded "special" status.

Telephone inquires concerning this decision should be directed to Lee W. Young at 571-272-4549.

The application is being forwarded to the Technology Center Art Unit 2822 for action in its regular turn.

Lee W. Young
Quality Assurance Specialist
Technology Center 2800

PTO/SB/20PCT-CN (06-11)
Approved for use through 01/31/2012. OMB 0651-0058
U.S. Patent and Trademark Office; U. S. DEPARTMENT OF COMMERCE
Under the Paperwork Reduction Act of 1995, no persons are required to respond to a collection of information unless it displays a valid OMB control number.

REQUEST FOR PARTICIPATION IN THE PATENT COOPERATION TREATY - PATENT PROSECUTION HIGHWAY (PCT-PPH) PILOT PROGRAM BETWEEN THE STATE INTELLECTUAL PROPERTY OFFICE OF THE P.R.C. (SIPO) AND THE USPTO

Application No:	13/026,914	Filing date:	February 14, 2011
First Named Inventor:	Yuanrong ZHU		
Title of the Invention:	ACTIVE ANTENNA, BASE STATION, METHOD FOR REFRESHING AMPLITUDES AND PHASES, AND METHOD FOR PROCESSING SIGNALS		

THIS REQUEST FOR PARTICIPATION IN THE PCT-PPH PILOT PROGRAM ALONG WITH THE REQUIRED DOCUMENTS MUST BE SUBMITTED VIA EFS-WEB. INFORMATION REGARDING EFS-WEB IS AVAILABLE AT HTTP://WWW.USPTO.GOV/EBC/EFS_HELP.HTML

APPLICANT HEREBY REQUESTS PARTICIPATION IN THE PCT-PPH PROGRAM AND PETITIONS TO MAKE THE ABOVE-IDENTIFIED APPLICATION SPECIAL UNDER THE PCT-PPH PROGRAM.

The above-identified application is (1) a national stage entry of the corresponding PCT application, or (2) a national stage entry of another PCT application which claims priority to the corresponding PCT application, or (3) a national application that claims domestic/ foreign priority to the corresponding PCT application, or (4) a national application which forms the basis for the priority claim in the corresponding PCT application, or (5) a continuing application of a U.S. application that satisfies one of (1) to (4) above, or (6) a U.S. application that claims domestic benefit to a U.S. provisional application which forms the basis for the priority claim in the corresponding PCT application.

The corresponding PCT application number(s) is/are: PCT/CN2009/070866

The international filing date of the corresponding PCT application(s) is/are: 18 Mar 2009

I. List of Required Documents:

a. **A copy of the latest international work product (WO/ISA, WO/IPEA, or IPER) in the above–identified corresponding PCT application(s)**

- [✔] Is attached.
- [ ] Is not attached because the document is already in the U.S. application.

b. **A copy of all claims which were indicated as having novelty, inventive step and industrial applicability in the above-identified corresponding PCT application(s).**

- [✔] Is attached.
- [ ] Is not attached because the document is already in the U.S. application.

c. **English translations of the documents in a. and b. above are attached (if the documents are not in the English language). A statement that the English translation is accurate is attached for the document in b. above.**

This collection of information is required by 35 U.S.C. 119, 37 CFR 1.55, and 37 CFR 1.102(d). The information is required to obtain or retain a benefit by the public, which is to file (and by the USPTO to process) an application. Confidentiality is governed by 35 U.S.C. 122 and 37 CFR 1.11 and 1.14. This collection is estimated to take 2 hours to complete, including gathering, preparing, and submitting the completed application form to the USPTO. Time will vary depending upon the individual case. Any comments on the amount of time you require to complete this form and/or suggestions for reducing this burden should be sent to the Chief Information Officer, U.S. Patent and Trademark Office, U.S. Department of Commerce, P.O. Box 1450, Alexandria, VA 22313-1450. DO NOT SEND FEES OR COMPLETED FORMS TO THIS ADDRESS.

Under the Paperwork Reduction Act of 1995, no persons are required to respond to a collection of information unless it displays a valid OMB control number.

REQUEST FOR PARTICIPATION IN THE PCT-PPH PILOT PROGRAM BETWEEN THE SIPO AND THE USPTO

(continued)

Application No.:	13/026,914
First Named Inventor:	Yuanrong ZHU

d. **(1) An information disclosure statement listing the documents cited in the international work products (ISR, WO/ISA, WO/IPEA, IPER) of the corresponding PCT application.**

☐ Is attached

☑ Has already been filed in the above-identified U.S. application on 2011-2-14

(2) Copies of all documents (except) for U.S. patents or U.S. patent application publications)

☐ Are attached.

☑ Have already been filed in the above-identified U.S. application on 2011-2-14

II. Claims Correspondence Table:

Claims in US Application	Patentable Claims in the corresponding PCT Application	Explanation regarding the correspondence
1	1	substantially the same
2	2	substantially the same
3	3	substantially the same
4	4	substantially the same
5	5	substantially the same
6	6	substantially the same
7	7	substantially the same
8	8	substantially the same
9	9	substantially the same
10	10	substantially the same
11	11	substantially the same
12	12	substantially the same
13	13	substantially the same
14	14	substantially the same
15	15	substantially the same
16	16	substantially the same
17	17	substantially the same

III. All the claims in the US application sufficiently correspond to the patentable claims in the corresponding PCT application.

Signature /John B. Conklin/	Date March 12, 2012
Name (Print/Typed) John B. Conklin	Registration Number 30,369

Privacy Act Statement

The **Privacy Act of 1974 (P.L. 93-579)** requires that you be given certain information in connection with your submission of the attached form related to a patent application or patent. Accordingly, pursuant to the requirements of the Act, please be advised that: (1) the general authority for the collection of this information is 35 U.S.C. 2(b)(2); (2) furnishing of the information solicited is voluntary; and (3) the principal purpose for which the information is used by the U.S. Patent and Trademark Office is to process and/or examine your submission related to a patent application or patent. If you do not furnish the requested information, the U.S. Patent and Trademark Office may not be able to process and/or examine your submission, which may result in termination of proceedings or abandonment of the application or expiration of the patent.

The information provided by you in this form will be subject to the following routine uses:

1. The information on this form will be treated confidentially to the extent allowed under the Freedom of Information Act (5 U.S.C. 552) and the Privacy Act (5 U.S.C 552a). Records from this system of records may be disclosed to the Department of Justice to determine whether disclosure of these records is required by the Freedom of Information Act.
2. A record from this system of records may be disclosed, as a routine use, in the course of presenting evidence to a court, magistrate, or administrative tribunal, including disclosures to opposing counsel in the course of settlement negotiations.
3. A record in this system of records may be disclosed, as a routine use, to a Member of Congress submitting a request involving an individual, to whom the record pertains, when the individual has requested assistance from the Member with respect to the subject matter of the record.
4. A record in this system of records may be disclosed, as a routine use, to a contractor of the Agency having need for the information in order to perform a contract. Recipients of information shall be required to comply with the requirements of the Privacy Act of 1974, as amended, pursuant to 5 U.S.C. 552a(m).
5. A record related to an International Application filed under the Patent Cooperation Treaty in this system of records may be disclosed, as a routine use, to the International Bureau of the World Intellectual Property Organization, pursuant to the Patent Cooperation Treaty.
6. A record in this system of records may be disclosed, as a routine use, to another federal agency for purposes of National Security review (35 U.S.C. 181) and for review pursuant to the Atomic Energy Act (42 U.S.C. 218(c)).
7. A record from this system of records may be disclosed, as a routine use, to the Administrator, General Services, or his/her designee, during an inspection of records conducted by GSA as part of that agency's responsibility to recommend improvements in records management practices and programs, under authority of 44 U.S.C. 2904 and 2906. Such disclosure shall be made in accordance with the GSA regulations governing inspection of records for this purpose, and any other relevant (*i.e.*, GSA or Commerce) directive. Such disclosure shall not be used to make determinations about individuals.
8. A record from this system of records may be disclosed, as a routine use, to the public after either publication of the application pursuant to 35 U.S.C. 122(b) or issuance of a patent pursuant to 35 U.S.C. 151. Further, a record may be disclosed, subject to the limitations of 37 CFR 1.14, as a routine use, to the public if the record was filed in an application which became abandoned or in which the proceedings were terminated and which application is referenced by either a published application, an application open to public inspection or an issued patent.
9. A record from this system of records may be disclosed, as a routine use, to a Federal, State, or local law enforcement agency, if the USPTO becomes aware of a violation or potential violation of law or regulation.

Doc Code: PET.GREEN
Document Description: Petition for Green Tech Pilot

PTO/SB/420 (05-10)
Approved for use through 05/31/2010. OMB 0651-0062
U.S. Patent and Trademark Office; U.S. DEPARTMENT OF COMMERCE
Under the Paperwork Reduction Act of 1995, no persons are required to respond to a collection of information unless it displays a valid OMB control number.

PETITION TO MAKE SPECIAL UNDER THE GREEN TECHNOLOGY PILOT PROGRAM

Attorney Docket Number:	SUS-013C1/ 7300843001	Application Number (if known):	Filing date: Herewith
First Named Inventor:	Benjamin R. Bollinger		
Title:	SYSTEMS AND METHODS FOR IMPROVING DRIVETRAIN EFFICIENCY FOR COMPRESSED GAS ENERGY STORAGE AND RECOVERY SYSTEMS		

APPLICANT HEREBY REQUESTS TO PARTICIPATE IN THE GREEN TECHNOLOGY PILOT PROGRAM FOR THE ABOVE-IDENTIFIED APPLICATION. See Instruction Sheet on page 2.

This petition must be timely filed electronically using the USPTO electronic filing system, EFS-Web.

1. By filing this petition:

   Applicant is requesting early publication: Applicant hereby requests early publication under 37 CFR 1.219 and the publication fee set forth in 37 CFR 1.18(d) accompanies this request.

2. By filing this petition: applicant is agreeing to make an election without traverse in a telephonic interview and elect an invention that meets the eligibility requirements set forth in the notice titled "Pilot Program for Green Technologies Including Greenhouse Gas Reduction," as modified by the notice titled "Elimination of Classification Requirement in the Green Technology Pilot Program," each of which was published in the Federal Register, if the Office determines that the claims are not obviously directed to a single invention.

3. This request is accompanied by statements of special status for the eligibility requirement.

4. The application contains no more than three (3) independent claims and twenty (20) total claims.

5. The application does not contain any multiple dependent claims

6. Other attachments: Preliminary Amendment
   Statement of Special Status

Signature	/Matthew T. Currie/	Date	February 14, 2011
Name (Print/Typed)	Matthew T. Currie	Registration Number	58,533

***Note**: Signatures of all the inventors or assignees of record of the entire interest or their representative(s) are required in accordance with 37 CFR 1.33 and 11.18. Please see 37 CFR 1.4(d) for the form of the signature. If necessary, submit multiple forms if more than one signature, see below*.*

☐ *Total of 1 forms are submitted.

IN THE UNITED STATES PATENT AND TRADEMARK OFFICE

APPLICANTS:	Bollinger *et al.*		
SERIAL NO.:	Not yet assigned	GROUP NO.:	Not yet assigned
FILING DATE:	Herewith	EXAMINER:	Not yet assigned
TITLE:	SYSTEMS AND METHODS FOR IMPROVING DRIVETRAIN EFFICIENCY FOR COMPRESSED GAS ENERGY STORAGE AND RECOVERY SYSTEMS		

Commissioner for Patents
P.O. Box 1450
Alexandria, VA 22313-1450

STATEMENTS OF SPECIAL STATUS AND MATERIALITY IN SUPPORT OF PETITION TO MAKE SPECIAL UNDER THE GREEN TECHNOLOGY PILOT PROGRAM

In accordance with the Federal Register notices published December 8, 2009, May 21, 2010, and November 10, 2010, Applicants hereby request to participate in the Green Technology Pilot Program for the above-identified application. Applicants submit that the invention claimed in the above-identified application materially contributes to the development of renewable energy resources and the conservation of energy resources at least because the invention solves a persistent problem with intermittent energy-generation systems (e.g., wind and solar renewable energy) by providing systems for storing and recovering the energy from these sources, thereby making them deployable on a widespread and practical basis – thereby enhancing and promoting the deployment of such systems. Thus, the claimed invention directly contributes to the conservation of energy resources by increasing the practicality and acceptance of renewable energy sources, thereby enabling them to replace fossil-fuel-dependent energy sources.

Specifically, the claimed energy storage and generation system features at least one liquid-piston cylinder assembly for expansion and/or compression of gas, whereby energy is respectively recovered and stored during expansion and compression of the gas and a control system operating the at least one liquid-piston cylinder assembly such that the at least one of expansion or compression of the gas is performed substantially isothermally, thereby increasing efficiency of the energy recovery and storage. The system is typically an open-air system, and

thus typically includes a pressure vessel for storage of compressed gas and a vent for venting expanded gas to atmosphere – such systems provide a large energy density. When this simple and compact system is coupled to renewable energy sources (e.g., wind turbines or solar cells), it stores the energy produced thereby in the form of compressed gas. Then, during periods of high power demand and/or periods when the wind turbine or solar cell is not producing energy (e.g., periods of calm or night), the compressed-gas energy may be utilized to produce electricity and satisfy demand. The simplicity of the liquid-piston-based approach may provide significant cost savings, enabling more efficient utilization of energy resources. Specifically, liquid-piston cylinder assemblies lack pistons and typically do not require honed cylinders, facilitating a less expensive energy storage and recovery solution.

In addition, the claimed invention assists in the conservation of energy and reduction of greenhouse-gas emissions by eliminating energy waste due to fluctuations in power demand. The claimed invention eliminates the need for rapidly-deployable gas turbines or generators that require the use of non-renewable energy resources (e.g., natural gas and diesel fuel) and are environmentally damaging due to their inherent noise and emissions. Instead, the claimed systems may be utilized to service fluctuating power demand without concomitant fossil-fuel use or greenhouse-gas emission.

Applicants believe no additional fees are necessitated by the filing of this paper. However, if any additional fee is due, please charge said fee occasioned by this paper to our Deposit Account No. 50-4047.

Respectfully submitted,

Date: February 14, 2011
Reg. No. 58,533

Electronic Signature: /Matthew T. Currie/
Matthew T. Currie
Attorney for Applicants
Bingham McCutchen LLP
One Federal Street
Boston, Massachusetts 02110

Tel. No.: (617) 951-8293
Fax No.: (617) 951-8736

UNITED STATES PATENT AND TRADEMARK OFFICE

UNITED STATES DEPARTMENT OF COMMERCE
United States Patent and Trademark Office
Address: COMMISSIONER FOR PATENTS
P.O. Box 1450
Alexandria, Virginia 22313-1450
www.uspto.gov

APPLICATION NO.	FILING DATE	FIRST NAMED INVENTOR	ATTORNEY DOCKET NO.	CONFIRMATION NO.
13/026,920	02/14/2011	Benjamin R. Bollinger	SUS-013C1	5791

23517 7590 03/15/2011
BINGHAM MCCUTCHEN LLP
2020 K Street, N.W.
Intellectual Property Department
WASHINGTON, DC 20006

EXAMINER

ART UNIT	PAPER NUMBER
3746	

MAIL DATE	DELIVERY MODE
03/15/2011	PAPER

Please find below and/or attached an Office communication concerning this application or proceeding.

The time period for reply, if any, is set in the attached communication.

UNITED STATES PATENT AND TRADEMARK OFFICE

Commissioner for Patents
United States Patent and Trademark Office
P.O. Box 1450
Alexandria, VA 22313-1450
www.uspto.gov

BINGHAM MCCUTCHEN LLP
2020 K Street, N.W.
Intellectual Property Department
WASHINGTON DC 20006

In re Application of	:	
BOLLINGER, BENJAMIN R. et al	:	DECISION ON PETITION
Application No. 13/026,920	:	TO MAKE SPECIAL UNDER
Filed: Feb. 14, 2011	:	THE GREEN TECHNOLOGY
Attorney Docket No. SUS-0131	:	PILOT PROGRAM

This is a decision on the petition under 37 CFR 1.102, filed Feb. 14, 2011 to make the above-identified application special under the pilot program for applications pertaining to Green Technologies as set forth in 74 Federal Register Notice 64666 (December 8, 2009) and amended by 75 Federal Register Notice 28554 (May 21, 2010) and 75 Federal Register Notice 69049 (November 10, 2010).

The petition is **granted.**

If reconsideration of this decision is desired, a petition for reconsideration must be filed within ONE (1) MONTH OR THIRTY (30) DAYS from the mail date of this decision, whichever is longer. No extension of this time limit can be granted under 37 CFR 1.136(a) or (b). The petition for reconsideration should include an exhaustive attempt to provide the lacking item(s) noted below, since, after a decision on the petition for reconsideration, no further reconsideration or review of the matter will be undertaken by the Director.

A grantable petition to make an application special under 37 CFR 1.102 and the pilot program as set forth in 74 FR 64666 must be directed to a nonprovisional application filed under 35 USC 111(a) or be a national stage entry under 35 USC 371, exclusive of any reissue applications.

In order to qualify for special status, the following requirements must be met. 1) The application must have no more than 3 independent claims and no more than 20 total claims. 2) The application must not contain any multiple dependent claims. 3) The petition must state the basis for seeking special status, i.e., the claimed invention either: A) materially enhances the quality of the environment or B) materially contributes to: i) the discovery or development of renewable energy resources, ii) the more efficient utilization and conservation of energy resources, or iii)

greenhouse gas emission reduction. 4) If the disclosure is not clear on its face that the claimed invention materially contributes under category (A) or (B), the petition must be accompanied by a statement by the applicant, assignee, or an attorney/agent registered to practice before the Office explaining how the materiality standard is met. 5) A statement that applicant will agree to make an election without traverse in a telephonic interview if a restriction requirement is made by the examiner. 6) The petition to make special must be filed electronically. 7) The petition must be filed at least one day prior to the date that a first Office Action appears in the Patent Application Information Retrieval (PAIR) system. 8) The petition must be accompanied by a request for early publication in compliance with 37 CFR 1.219 and include the publication fee as set forth in 37 CFR 1.18(d).

The requirement for a fee for consideration of the petition to make special for applications pertaining to Green Technologies has been waived.

The instant petition complies with items 1 – 8 above. Accordingly, the above-identified application has been accorded "special" status.

Telephone inquires concerning this decision should be directed to Henry C. Yuen at 571-272-4856.

Currently, this application is undergoing pre-examination processing. Upon completion, the application will be forwarded to the Technology Center Art Unit 3746 for action on the merits commensurate with this decision.

/Henry C. Yuen/

Henry C. Yuen
Quality Assurance Specialist
Technology Center TC 3700

Attorney's Docket No. 34786-547001US
Customer Number 64046

IN THE UNITED STATES PATENT AND TRADEMARK OFFICE

Serial No.:	13/026,921	TC/Art Unit:	2877
Applicant:	Alfred Feitisch *et al.*	Conf. No.:	5793
Filing Date:	February 14, 2011	Examiner:	Not Yet Assigned
Title:	**SPECTROMETER WITH VALIDATION CELL**		

Mail Stop Petition
Commissioner for Patents
P.O. Box 1450
Alexandria, VA 22313-1450

SUBMISSION IN SUPPORT OF PETITION TO MAKE SPECIAL UNDER THE GREEN TECHNOLOGY PILOT PROGRAM

The following pages include items submitted in support of the attached *Petition to Make Special Under the Green Technology Pilot Program.* Prompt consideration and grant of this petition is hereby requested in light of the statements on the following pages.

CERTIFICATE OF ELECTRONIC TRANSMISSION

I hereby certify that this correspondence is being electronically transmitted to the Patent and Trademark Office on the date indicated below in accordance with 37 CFR 1.8(a)(1)(i)(C).

August 15, 2011
Date of Transmission

Signature

Kethya Teuk
Typed or Printed Name of Person Signing Certificate

REMARKS

Number of Claims. The instant application, which is a non-reissue, non-provisional utility application filed under 35 U.S.C. 111(a), contains no more than three (3) independent claims and twenty (20) total claims and no multiple dependent claims. A preliminary amendment is submitted herewith to cancel claims in excess of these requirements.

Early Publication Request. Per the attached Petition to Make Special Under the Green Technology Pilot Program (Form PTO/SB/420), a request for early publication is hereby submitted in compliance with 37 CFR §1.219. The publication fee set forth in 37 CFR §1.18(d) is also paid in association with this submission.

No first Office Action Yet Mailed. As of the date of this filing, no first Office action (which may be an Office action containing only a restriction requirement) appears in the Patent Application Information Retrieval (PAIR) system.

Single Invention. The claims of the instant application are believed to be directed to a single invention. If the Office determines that the claims are directed to multiple inventions (e.g., in a restriction requirement), the Office is requested to initiate a telephonic interview to the undersigned who agrees to elect, without traverse, an invention that meets the eligibility requirements of the Green Technology Pilot Program.

Statement of Special Status for the Eligibility Requirement. The subject matter of the currently pending claims of this application materially enhances the quality of the environment and/or materially contributes to: (1) the discovery or development of renewable energy resources, (2) the more efficient utilization and conservation of energy resources, and/or (3) green house gas emission reduction.

The claims of the instant application are drawn to systems, methods, and the like for enabling an absorption spectrometer to re-calibrate itself, for example using an iterative process in which one or more operating and/or analytical parameters of the laser absorption spectrometer are adjusted to find new operating and/or analytical conditions that cause the spectrometer to perform more closely to a previously recorded calibration condition. Such capabilities can result in significantly enhanced process control abilities, for example in petroleum refining operations, and can lead to substantial savings in energy usage (e.g. by enabling more efficient operation of the process and minimizing process downtime by enabling dynamic and continuous recalibration of spectroscopic analyzers) and in end-product quality and energy content.

CONCLUSION

On the basis of the foregoing, the instant application is believed to be in condition for acceptance into the *Green Technology Pilot Program*. The Statement of Special Status submitted herein discusses one or more advantages relating to implementations of the instantly claimed subject matter that can enhance the environment or contribute to energy conservation or renewable energy generation or to reduction in greenhouse gas emissions. Other advantages or benefits may also flow from implementations of the current subject matter. Nothing in this paper should be construed as an intent to concede any issue with regard to any claim, except as specifically stated in this paper.

As noted above, the Publication Fee set forth in 37 CFR §1.18(d) is paid in association with this submission. No other fees are believed to be due. However, the Commissioner is hereby authorized to charge any additional claim fees and any additional fees that may be due, or credit any overpayment of same, to Deposit Account No. 50-0311, Reference No. 34786-547001US. If there are any questions regarding this reply, the Examiner is encouraged to contact the undersigned at the telephone number provided below.

Respectfully submitted,

Date: August 15, 2011

Michael D. Van Loy, Reg. No. 52,315

Mintz, Levin, Cohn, Ferris, Glovsky and Popeo, P.C.
3580 Carmel Mountain Road, Suite 300
San Diego, CA 92130
Customer No. 64046
Tel.: 858/314-1559
Fax: 858/314-1501

Doc Code: PET.GREEN
Document Description: Petition for Green Tech Pilot

PTO/SB/420 (03-11)

PETITION TO MAKE SPECIAL UNDER THE GREEN TECHNOLOGY PILOT PROGRAM

Attorney Docket Number: 34786-547001US	Application Number (if known): 13/026,921	Filing date: February 14, 2011

First Named Inventor: Alfred Feitisch

Title: SPECTROMETER WITH VALIDATION CELL

APPLICANT HEREBY REQUESTS TO PARTICIPATE IN THE GREEN TECHNOLOGY PILOT PROGRAM FOR THE ABOVE-IDENTIFIED APPLICATION. See Instruction Sheet on page 2.

This petition must be timely filed electronically using the USPTO electronic filing system, EFS-Web.

1. By filing this petition:

   Applicant is requesting early publication: Applicant hereby requests early publication under 37 CFR 1.219 and the publication fee set forth in 37 CFR 1.18(d) accompanies this request.

2. By filing this petition: applicant is agreeing to make an election without traverse in a telephonic interview and elect an invention that meets the eligibility requirements for the Green Technology Pilot Program, if the Office determines that the claims are not obviously directed to a single invention. See Instruction Sheet.

3. This request is accompanied by statements of special status for the eligibility requirement.

4. The application contains no more than three (3) independent claims and twenty (20) total claims.

5. The application does not contain any multiple dependent claims.

6. Other attachments: _____

Signature	Date 8/15/2011
Name (Print/Typed) Michael Van Loy (Applicant's representative)	Registration Number 52315

Note: Signatures of all the inventors or assignees of record of the entire interest or their representative(s) are required in accordance with 37 CFR 1.33 and 11.18. Please see 37 CFR 1.4(d) for the form of the signature. If necessary, submit multiple forms for more than one signature, see below.*

☐ *Total of_____ forms are submitted.

If you need assistance in completing the form, call 1-800-PTO-9199 and select option 2.

UNITED STATES PATENT AND TRADEMARK OFFICE

UNITED STATES DEPARTMENT OF COMMERCE
United States Patent and Trademark Office
Address: COMMISSIONER FOR PATENTS
P.O. Box 1450
Alexandria, Virginia 22313-1450
www.uspto.gov

APPLICATION NO.	FILING DATE	FIRST NAMED INVENTOR	ATTORNEY DOCKET NO.	CONFIRMATION NO.
13/026,921	02/14/2011	ALFRED FEITISCH	34786-547001US	5793

64046 7590 09/21/2011
MINTZ, LEVIN, COHN, FERRIS, GLOVSKY AND POPEO, P.C
ONE FINANCIAL CENTER
BOSTON, MA 02111

EXAMINER

ART UNIT	PAPER NUMBER
2877	

MAIL DATE	DELIVERY MODE
09/21/2011	PAPER

Please find below and/or attached an Office communication concerning this application or proceeding.

The time period for reply, if any, is set in the attached communication.

UNITED STATES PATENT AND TRADEMARK OFFICE

Commissioner for Patents
United States Patent and Trademark Office
P.O. Box 1450
Alexandria, VA 22313-1450
www.uspto.gov

MINTZ, LEVIN, COHN, FERRIS, GLOVSKY AND POPEO, P.C
ONE FINANCIAL CENTER
BOSTON MA 02111

SEP 21 2011

In re Application of	:	
FEITISCH et al.	:	DECISION ON PETITION
Application No. 13/026,921	:	TO MAKE SPECIAL UNDER
Filed: February 14, 2010	:	THE GREEN TECHNOLOGY
Attorney Docket No. 34786-547001US	:	PILOT PROGRAM

This is a decision on the petition under 37 CFR 1.102, filed on August 15, 2011, to make the above-identified application special under the pilot program for applications pertaining to Green Technologies as set forth 74 Federal Register Notice 64666 (December 8, 2009) and amended by 75 Federal Register Notice 28554 (May 21, 2010) and 75 Federal Register Notice 69049 (November 10, 2010).

The petition is **DISMISSED**.

If reconsideration of this decision is desired, a petition for reconsideration must be filed within ONE (1) MONTH OR THIRTY (30) DAYS from the mail date of this decision, whichever is longer. No extension of this time limit can be granted under 37 CFR 1.136(a) or (b). The petition for reconsideration should include an exhaustive attempt to provide the lacking item(s) noted below, since, after a decision on the petition for reconsideration, no further reconsideration or review of the matter will be undertaken by the Director.

A grantable petition to make an application special under 37 CFR 1.102 and the pilot program as set forth in 74 FR 64666 must be directed to a nonprovisional application filed under 35 USC 111(a) or be a national stage entry under 35 USC 371, exclusive of any reissue applications and be filed prior to the date of the notice, December 8, 2009.

In order to qualify for special status, the following requirements must be met. 1) The application must have no more than 3 independent claims and no more than 20 total claims. 2) The application must not contain any multiple dependent claims. 3) The petition must state the basis for seeking special status, i.e., the claimed invention either: A) materially enhances the quality of the environment or B) materially contributes to: i) the discovery or development of renewable energy resources, ii) the more efficient utilization and conservation of energy resources, or iii) greenhouse gas emission reduction. 4) If the disclosure is not clear on its face that the claimed invention materially contributes under category (A) or (B), the petition must be accompanied by a statement by the applicant, assignee, or an attorney/agent registered to practice before the Office explaining how the materiality standard is met. 5) A statement that applicant will agree to make an election without traverse in a telephonic interview if a restriction requirement is made

by the examiner. 6) The petition to make special must be filed electronically. 7) The petition must be filed at least one day prior to the date that a first Office Action appears in the Patent Application Information Retrieval (PAIR) system. 8) The petition must be accompanied by a request for early publication in compliance with 37 CFR 1.219 and include the publication fee as set forth in 37 CFR 1.18(d).

The requirement for a fee for consideration of the petition to make special for applications pertaining to Green Technologies has been waived.

The petition lacks item 4.

In regard to item 4, applicant's statement pertaining to how the materiality standard is met does not satisfy the requirements for this pilot. The instant petition includes a statement identifying the basis for the special status as having claims which materially contributes to the development of renewable energy resources, efficient energy utilization/conservation, and green house gas reduction. The materiality standard does not permit an applicant to speculate as to how a hypothetical end-user might specially apply the claimed invention in a manner that could contribute to the development of renewable energy resources, efficient energy utilization/conservation, and green house gas reduction. Any argument that the claimed invention can be used energy conservation, green house gas reduction or development of renewable energy would be considered speculative as to how a hypothetical end-user might specially apply to the claimed method of absorption spectrometer. The claims are not directed to the energy conservation, renewable energy, or reduction of green house gas emissions.

Any reconsideration of this decision should be submitted through the USPTO electronic filing system, EFS-Web, and selecting the document description of "Petition for Green Tech Pilot" on the EFS-Web screen.

Telephone inquiries concerning this decision should be directed to Colleen Dunn at 571-272-1170.

The application is being forwarded to the appropriate Technology Center Art Unit for action on the merits commensurate with this decision.

/Colleen Dunn/

Colleen Dunn
Quality Assurance Specialist
Technology Center 2800

UNITED STATES PATENT AND TRADEMARK OFFICE

Commissioner for Patents
United States Patent and Trademark Office
P.O. Box 1450
Alexandria, VA 22313-1450
www.uspto.gov

ROPES & GRAY LLP
IPRM - Floor 43
PRUDENTIAL TOWER
800 BOYLSTON STREET
BOSTON MA 02199-3600

MAILED
APR 12 2011
OFFICE OF PETITIONS

In re Application of
William Eugene Patton
Application No. 13/026,924
Filed: February 14, 2011
Attorney Docket No. HSDO-034-104

: DECISION GRANTING
: PETITION

This is a decision on the filing date petition filed March 16, 2011 under 37 CFR 1.57(a). The petition is treated under 37 CFR 1.53(e)(2).

The application was filed on February 14, 2011. However, on March 10, 2011 the Office of Data Management mailed a Notice of Incomplete Application stating that the application had not been filed with drawings and thus, the application could not be accorded a filing date.

In response, the present petition was filed. Petitioner contends that the instant application, upon filing, properly claimed priority to previously filed non-provisional U.S. Application 11/986,275, which is incorporated herein by reference.

Petitioner's arguments and evidence have been considered. However, a review of the application confirms that, as filed, the application contained at least one method claim. MPEP 601.01(f) provides that:

> It has been USPTO practice to treat an application that contains at least one process or method claim as an application for which a drawing is not necessary for an understanding of the invention under 35 U.S.C. 113 (first sentence). The same practice has been followed in composition applications.

Thus, pursuant to § 601.01(f), a drawing is not considered essential for a filing date. The instant application is entitled to a filing date without drawings present in the application.

Accordingly, the Office should have granted the application a filing date and mailed a Notice of Omitted Items instead of a Notice of Incomplete Nonprovisional Application.

As stated in MPEP 601.01(g) under the section entitled, "Application Entitled to a Filing Date," applicant may submit an amendment to include the inadvertently omitted portion of the drawing(s) pursuant to 37 CFR 1.57(a):

> [i]f an application was filed on or after September 21, 2004, and contains a claim under 37 CFR 1.55 for priority of a prior-filed foreign application, or a claim under 37 CFR 1.78 for the benefit of a prior-filed provisional, nonprovisional, or international application that was present on the filing date of the application, and the omitted portion of the drawing(s) was inadvertently omitted from the application and is completely contained in the prior-filed application[.]

Please note that no petition is required and that the amendment must comply with 37 CFR 1.57(a) and 37 CFR 1.121. See MPEP § 201.17 The amendment filed with the instant petition to include the inadvertently omitted drawing(s) will be considered by the examiner.

To the extent the instant petition requests a filing date of February 14, 2011 with no drawings present in the application, the petition is **GRANTED**.

Given the basis for granting this petition, the petition fee is being refunded back to deposit account no. 18-1945.

Pursuant to this decision, the application has been referred to Office of Patent Application Processing for:

- correction of the filing date to February 14, 2011
- for indication in Office records, as appropriate, that "0" sheets of drawings were present on filing and
- for issuance of a filing receipt.

Telephone inquiries concerning this matter should be directed to Senior Petitions Attorney Patricia Faison-Ball at (571) 272-3212.

Christopher Bottorff
Supervisor
Office of Petitions

UNITED STATES PATENT AND TRADEMARK OFFICE

Commissioner for Patents
United States Patent and Trademark Office
P.O. Box 1450
Alexandria, VA 22313-1450
www.uspto.gov

In re Application of
Randy Westlund

Application No. 13026949

Filed: February 14,2011

Attorney Docket No. GREATB-53617

:DECISION ON PETITION TO MAKE SPECIAL
:UNDER 37 CFR 1.102(c)(1)

This is a decision on the electronic petition under 37 CFR 1.102 (c)(1), filed 13-APR-2011 to make the above-identified application special based on applicant's age as set forth in MPEP § 708.02, Section IV.

The petition is **GRANTED**.

A grantable petition to make an application special under 37 CFR 1.102(c)(1), MPEP § 708.02, Section IV: Applicant's Age must include a statement by applicant or a registered practitioner having evidence that applicant is at least 65 years of age. No fee is required.

Accordingly, the above-identified application has been accorded "special" status and will be taken up for action by the examiner upon the completion of all pre-examination processing.

Telephone inquiries concerning this electronic decision should be directed to the Electronic Business Center at 866-217-9197.

All other inquiries concerning either the examination or status of the application should be directed to the Technology Center.

Doc code : PET.OP.AGE
Description : Petition to make special based on Age/Health

PTO/SB/130 (07-09)
Approved for use through 07/31/2012. OMB 0651- 0031
U.S. Patent and Trademark Office; U.S. DEPARTMENT OF COMMERCE
Under the Paperwork Reduction Act of 1995, no persons are required to respond to a collection of information unless it contains a valid OMB control number

PETITION TO MAKE SPECIAL BASED ON AGE FOR ADVANCEMENT OF EXAMINATION UNDER 37 CFR 1.102(c)(1)

Application Information

Application Number	13026949	Confirmation Number	5846	Filing Date	2011-02-14
Attorney Docket Number (optional)	GREATB-53617	Art Unit	3766	Examiner	
First Named Inventor	Randy Westlund				
Title of Invention	MEDICAL LEAD SYSTEM UTILIZING ELECTROMAGNETIC BANDSTOP FILTERS				

Attention: Office of Petitions
An application may be made special for advancement of examination upon filing of a petition showing that the applicant is 65 years of age, or more. No fee is required with such a petition. See 37 CFR 1.102(c)(1) and MPEP 708.02 (IV).

APPLICANT HEREBY PETITIONS TO MAKE SPECIAL FOR ADVANCEMENT OF EXAMINATION IN THIS APPLICATION UNDER 37 CFR 1.102(c)(1) and MPEP 708.02 (IV) ON THE BASIS OF THE APPLICANT'S AGE.

A grantable petition requires one of the following items:
(1) Statement by one named inventor in the application that he/she is 65 years of age, or more; or
(2) Certification by a registered attorney/agent having evidence such as a birth certificate, passport, driver's license, etc. showing one named inventor in the application is 65 years of age, or more.

Name of Inventor who is 65 years of age, or older

Given Name	Middle Name	Family Name	Suffix
Robert	A.	Stevenson	

A signature of the applicant or representative is required in accordance with 37 CFR 1.33 and 10.18.
Please see 37 CFR 1.4(d) for the format of the signature.

Select (1) or (2) :

○ (1) I am an inventor in this application and I am 65 years of age, or more.

◉ (2) I am an attorney or agent registered to practice before the Patent and Trademark Office, and I certify that I am in possession of evidence, and will retain such in the application file record, showing that the inventor listed above is 65 years of age, or more.

Signature	/Scott W. Kelley, Reg. No. 30762/	Date (YYYY-MM-DD)	2011-04-13
Name	Scott W. Kelley	Registration Number	30762

PTO/SB/130 (07-09)
Approved for use through 07/31/2012. OMB 0651- 0031
U.S. Patent and Trademark Office; U.S. DEPARTMENT OF COMMERCE
Under the Paperwork Reduction Act of 1995, no persons are required to respond to a collection of information unless it contains a valid OMB control number

Privacy Act Statement

The Privacy Act of 1974 (P.L. 93-579) requires that you be given certain information in connection with your submission of the attached form related to a patent application or patent. Accordingly, pursuant to the requirements of the Act, please be advised that: (1) the general authority for the collection of this information is 35 U.S.C. 2(b)(2); (2) furnishing of the information solicited is voluntary; and (3) the principal purpose for which the information is used by the U.S. Patent and Trademark Office is to process and/or examine your submission related to a patent application or patent. If you do not furnish the requested information, the U.S. Patent and Trademark Office may not be able to process and/or examine your submission, which may result in termination of proceedings or abandonment of the application or expiration of the patent.

The information provided by you in this form will be subject to the following routine uses:

1. The information on this form will be treated confidentially to the extent allowed under the Freedom of Information Act (5 U.S.C. 552) and the Privacy Act (5 U.S.C. 552a). Records from this system of records may be disclosed to the Department of Justice to determine whether the Fr eedom of Information Act requires disclosure of these records.

2. A record from this system of records may be disclosed, as a routine use, in the course of presenting evidence to a court, magistrate, or administrative tribunal, including disclosures to opposing counsel in the course of settlement negotiations.

3. A record in this system of records may be disclosed, as a routine use, to a Member of Congress submitting a request involving an individual, to whom the record pertains, when the individual has requested assistance from the Member with respect to the subject matter of the record.

4. A record in this system of records may be disclosed, as a routine use, to a contractor of the Agency having need for the information in order to perform a contract. Recipients of information shall be required to comply with the requirements of the Privacy Act of 1974, as amended, pursuant to 5 U.S.C. 552a(m).

5. A record related to an International Application filed under the Patent Cooperation Treaty in this system of records may be disclosed, as a routine use, to the International Bureau of the World Intellectual Property Organization, pursuant to the Patent Cooperation Treaty.

6. A record in this system of records may be disclosed, as a routine use, to another federal agency for purposes of National Security review (35 U.S.C. 181) and for review pursuant to the Atomic Energy Act (42 U.S.C. 218(c)).

7. A record from this system of records may be disclosed, as a routine use, to the Administrator, General Services, or his/her designee, during an inspection of records conducted by GSA as part of that agency's responsibility to recommend improvements in records management practices and programs, under authority of 44 U.S.C. 2904 and 2906. Such disclosure shall be made in accordance with the GSA regulations governing inspection of records for this purpose, and any other relevant (i.e., GSA or Commerce) directive. Such disclosure shall not be used to make determinations about indivi duals.

8. A record from this system of records may be disclosed, as a routine use, to the public after either publication of the application pursuant to 35 U.S.C. 122(b) or issuance of a patent pursuant to 35 U.S.C. 151. Further, a record may be disclosed, subject to the limitations of 37 CFR 1.14, as a routine use, to the public if the record was filed in an application which became abandoned or in which the proceedings were terminated and which application is referenced by either a published application, an application open to public inspections or an issued patent.

9. A record from this system of records may be disclosed, as a routine use, to a Federal, State, or local law enforcement agency, if the USPTO becomes aware of a violation or potential violation of law or regulation.

UNITED STATES PATENT AND TRADEMARK OFFICE

Commissioner for Patents
United States Patent and Trademark Office
P.O. Box 1450
Alexandria, VA 22313-1450
www.uspto.gov

Decision Date : November 23,2011

In re Application of :

Randy Westlund

DECISION ON PETITION

UNDER CFR 1.313(c)(2)

Application No : 13026949

Filed : 14-Feb-2011

Attorney Docket No : GREATB-53617

This is an electronic decision on the petition under 37 CFR 1.313(c)(2), filed November 23,2011 to withdraw the above-identified application from issue after payment of the issue fee.

The petition is **GRANTED.**

The above-identified application is withdrawn from issue for consideration of a submission under 37 CFR 1.114 (request for continued examination). See 37 CFR 1.313(c)(2).

Petitioner is advised that the issue fee paid in this application cannot be refunded. If, however, this application is again allowed, petitioner may request that it be applied towards the issue fee required by the new Notice of Allowance.

Telephone inquiries concerning this decision should be directed to the Patent Electronic Business Center (EBC) at 866-217-9197.

This application file is being referred to Technology Center AU 3762 for processing of the request for continuing examination under 37 CFR 1.114 .

Office of Petitions

Doc Code: PET.AUTO Document Description: Petition automatically granted by EFS-Web	PTO/SB/140 U.S. Patent and Trademark Office Department of Commerce

Electronic Petition Request	**PETITION TO WITHDRAW AN APPLICATION FROM ISSUE AFTER PAYMENT OF THE ISSUE FEE UNDER 37 CFR 1.313(c)**
Application Number	13026949
Filing Date	14-Feb-2011
First Named Inventor	Randy Westlund
Art Unit	3762
Examiner Name	GEORGE MANUEL
Attorney Docket Number	GREATB-53617
Title	MEDICAL LEAD SYSTEM UTILIZING ELECTROMAGNETIC BANDSTOP FILTERS

An application may be withdrawn from issue for further action upon petition by the applicant. To request that the Office withdraw an application from issue, applicant must file a petition under this section including the fee set forth in § 1.17(h) and a showing of good and sufficient reasons why withdrawal of the application from issue is necessary.

APPLICANT HEREBY PETITIONS TO WITHDRAW THIS APPLICATION FROM ISSUE UNDER 37 CFR 1.313(c).

A grantable petition requires the following items:
(1) Petition fee; and
(2) One of the following reasons:
(a) Unpatentability of one or more claims, which must be accompanied by an unequivocal statement that one or more claims are unpatentable, an amendment to such claim or claims, and an explanation as to how the amendment causes such claim or claims to be patentable;
(b) Consideration of a request for continued examination in compliance with § 1.114 (for a utility or plant application only); or
(c) Express abandonment of the application. Such express abandonment may be in favor of a continuing application, but not a CPA under 37 CFR 1.53(d).

Petition Fee

☐ Applicant claims SMALL ENTITY status. See 37 CFR 1.27.

☐ Applicant is no longer claiming SMALL ENTITY status. See 37 CFR 1.27(g)(2).

☐ Applicant(s) status remains as SMALL ENTITY.

☒ Applicant(s) status remains as other than SMALL ENTITY

Reason for withdrawal from issue

○ One or more claims are unpatentable

◉ Consideration of a request for continued examination (RCE) (List of Required Documents and Fees)

○ Applicant hereby expressly abandons the instant application (any attorney/agent signing for this reason must have power of attorney pursuant to 37 CFR 1.32(b)).

RCE request,submission, and fee.

☐ I certify, in accordance with 37 CFR 1.4(d)(4) that : The RCE request ,submission, and fee have already been filed in the above-identified application on

☒ Are attached.

THIS PORTION MUST BE COMPLETED BY THE SIGNATORY OR SIGNATORIES

I certify, in accordance with 37 CFR 1.4(d)(4) that I am:

◉ An attorney or agent registered to practice before the Patent and Trademark Office who has been given power of attorney in this application.

○ An attorney or agent registered to practice before the Patent and Trademark Office, acting in a representative capacity.

○ A sole inventor

○ A joint inventor; I certify that I am authorized to sign this submission on behalf of all of the inventors

○ A joint inventor; all of whom are signing this e-petition

○ The assignee of record of the entire interest that has properly made itself of record pursuant to 37 CFR 3.71

Signature	/Scott W. Kelley, Reg. No. 30762/
Name	Scott W. Kelley
Registration Number	30762

Doc Code: PET.GREEN
Document Description: Petition for Green Tech Pilot

PTO/SB/420 (11-10)
Approved for use through 01/31/2011. OMB 0651-0062
U.S. Patent and Trademark Office; U.S. DEPARTMENT OF COMMERCE
Under the Paperwork Reduction Act of 1995, no persons are required to respond to a collection of information unless it displays a valid OMB control number.

PETITION TO MAKE SPECIAL UNDER THE GREEN TECHNOLOGY PILOT PROGRAM

Attorney Docket Number:	695458605US	Application Number (if known): 13/026,990- Conf. #5922	Filing date: February 14, 2011
First Named Inventor:	Roy E. McAlister, P.E.		
Title:	CHEMICAL REACTORS WITH ANNULARLY POSITIONED DELIVERY AND REMOVAL DEVICES, AND ASSOCIATED SYSTEMS AND METHODS		

APPLICANT HEREBY REQUESTS TO PARTICIPATE IN THE GREEN TECHNOLOGY PILOT PROGRAM FOR THE ABOVE-IDENTIFIED APPLICATION. See Instruction Sheet on page 2.

This petition must be timely filed electronically using the USPTO electronic filing system, EFS-Web.

1. By filing this petition:

   Applicant is requesting early publication: Applicant hereby requests early publication under 37 CFR 1.219 and the publication fee set forth in 37 CFR 1.18(d) accompanies this request.

2. By filing this petition: applicant is agreeing to make an election without traverse in a telephonic interview and elect an invention that meets the eligibility requirements for the Green Technology Pilot Program, if the Office determines that the claims are not obviously directed to a single invention. See Instruction Sheet.

3. This request is accompanied by statements of special status for the eligibility requirement.

4. The application contains no more than three (3) independent claims and twenty (20) total claims.

5. The application does not contain any multiple dependent claims.

6. Other attachments: Statement in Support of Petition

Signature	Date 5.16.11
Name (Print/Typed) Susan D. Betcher	Registration Number 43,498

Note: Signatures of all the inventors or assignees of record of the entire interest or their representative(s) are required in accordance with 37 CFR 1.33 and 11.18. Please see 37 CFR 1.4(d) for the form of the signature. If necessary, submit multiple forms if more than one signature, see below.*

☐ *Total of 1 forms are submitted.

Docket No.: 695458605US
(PATENT)

IN THE UNITED STATES PATENT AND TRADEMARK OFFICE

In re Patent Application of:
Roy E. McAlister, P.E.

Application No.: 13/026,990

Confirmation No.: 5922

Filed: February 14, 2011

Art Unit: 1715

For: CHEMICAL REACTORS WITH ANNULARLY POSITIONED DELIVERY AND REMOVAL DEVICES, AND ASSOCIATED SYSTEMS AND METHODS

Examiner: Not Yet Assigned

STATEMENT IN SUPPORT OF PETITION TO MAKE SPECIAL

MS Missing Parts
Commissioner for Patents
P.O. Box 1450
Alexandria, VA 22313-1450

Sir:

This paper is filed in support of the Petition to Make Special under the Green Technology Pilot Program filed concurrently herewith.

Petitioner hereby states that the referenced application is directed to a single invention that materially enhances the quality of the environment, or that materially contributes to: (1) the discovery or development of renewable energy resources; (2) the more efficient utilization and conservation of energy resources; or (3) green house gas emission reduction.

More specifically, the specification and claims are directed to a chemical reactor using concentrated solar radiation to provide more efficient utilization and conservation of energy resources.

In light of the above, it is requested that the Petition to Make Special under the Green Technology Pilot Program be granted.

Applicant believes no fee is due with this response. However, if a fee is due, please charge our Deposit Account No. 50-0665, under Order No. 695458606US from which the undersigned is authorized to draw.

Dated: 5.16.11

Respectfully submitted,

By _____

Susan D. Betcher
Registration No.: 43,498
PERKINS COIE LLP
P.O. Box 1247
Seattle, Washington 98111-1247
(206) 359-8000
(206) 359-7198 (Fax)
Attorney for Applicant

UNITED STATES PATENT AND TRADEMARK OFFICE

UNITED STATES DEPARTMENT OF COMMERCE
United States Patent and Trademark Office
Address: COMMISSIONER FOR PATENTS
P.O. Box 1450
Alexandria, Virginia 22313-1450
www.uspto.gov

APPLICATION NO.	FILING DATE	FIRST NAMED INVENTOR	ATTORNEY DOCKET NO.	CONFIRMATION NO.
13/026,990	02/14/2011	Roy Edward McAlister	695458605US	5922

25096 7590 06/21/2011
PERKINS COIE LLP
PATENT-SEA
P.O. BOX 1247
SEATTLE, WA 98111-1247

EXAMINER

ART UNIT	PAPER NUMBER
1715	

NOTIFICATION DATE	DELIVERY MODE
06/21/2011	ELECTRONIC

Please find below and/or attached an Office communication concerning this application or proceeding.

The time period for reply, if any, is set in the attached communication.

Notice of the Office communication was sent electronically on above-indicated "Notification Date" to the following e-mail address(es):

patentprocurement@perkinscoie.com

UNITED STATES PATENT AND TRADEMARK OFFICE

Commissioner for Patents
United States Patent and Trademark Office
P.O. Box 1450
Alexandria, VA 22313-1450
www.uspto.gov

PERKINS COIE LLP
PATENT-SEA
P.O. BOX 1247
SEATTLE WA 98111-1247

6/21/11

In re Application of	:	
MCALISTER, ROY EDWARD et al	:	DECISION ON PETITION
Application No. 13/026,990	:	TO MAKE SPECIAL UNDER
Filed: **02/14/2011**	:	THE GREEN TECHNOLOGY
Attorney Docket No. **695458605US**	:	PILOT PROGRAM

This is a decision on the petition under 37 CFR 1.102, filed May 16, 2011, to make the above-identified application special under the pilot program for applications pertaining to Green Technologies as set forth in 74 Federal Register Notice 64666 (December 8, 2009) and amended by 75 Federal Register Notice 28554 (May 21, 2010) and 75 Federal Register Notice 69049 (November 10, 2010).

The petition is **GRANTED**.

A grantable petition to make an application special under 37 CFR 1.102 and the pilot program as set forth in 74 FR 64666 must be directed to a nonprovisional application filed under 35 USC 111(a) or be a national stage entry under 35 USC 371, exclusive of any reissue applications.

In order to qualify for special status, the following requirements must be met. 1) The application must have no more than 3 independent claims and no more than 20 total claims. 2) The application must not contain any multiple dependent claims. 3) The petition must state the basis for seeking special status, i.e., the claimed invention either: A) materially enhances the quality of the environment or B) materially contributes to: i) the discovery or development of renewable energy resources, ii) the more efficient utilization and conservation of energy resources, or iii) greenhouse gas emission reduction. 4) If the disclosure is not clear on its face that the claimed invention materially contributes under category (A) or (B), the petition must be accompanied by a statement by the applicant, assignee, or an attorney/agent registered to practice before the Office explaining how the materiality standard is met. 5) A statement that applicant will agree to make an election without traverse in a telephonic interview if a restriction requirement is made by the examiner. 6) The petition to make special must be filed electronically. 7) The petition must be filed at least one day prior to the date that a first Office Action appears in the Patent Application Information Retrieval (PAIR) system. 8) The petition must be accompanied by a request for early publication in compliance with 37 CFR 1.219 and include the publication fee as set forth in 37 CFR 1.18(d).

The requirement for a fee for consideration of the petition to make special for applications pertaining to Green Technologies has been waived.

The instant petition complies with items 1 – 8 above. Accordingly, the above-identified application has been accorded "special" status.

Telephone inquires concerning this decision should be directed to Tom Dunn at 571-272-1171.

The application is being forwarded to the Technology Center Art Unit 1715 for action on the merits commensurate with this decision.

/Tom Dunn/

Tom Dunn
Quality Assurance Specialist
Technology Center 1700

Doc Code: PET.GREEN
Document Description: Petition for Green Tech Pilot

PTO/SB/420 (11-10)
Approved for use through 01/31/2011. OMB 0651-0062
U.S. Patent and Trademark Office; U.S. DEPARTMENT OF COMMERCE
Under the Paperwork Reduction Act of 1995, no persons are required to respond to a collection of information unless it displays a valid OMB control number.

PETITION TO MAKE SPECIAL UNDER THE GREEN TECHNOLOGY PILOT PROGRAM

Attorney Docket Number:	695458602US	Application Number (if known): 13/026,996- Conf. #5929	Filing date: February 14, 2011
First Named Inventor:	Roy E. McAlister, P.E.		
Title:	REACTOR VESSELS WITH TRANSMISSIVE SURFACES FOR PRODUCING HYDROGEN-BASED FUELS AND STRUCTURAL ELEMENTS, AND ASSOCIATED SYSTEMS AND METHODS		

APPLICANT HEREBY REQUESTS TO PARTICIPATE IN THE GREEN TECHNOLOGY PILOT PROGRAM FOR THE ABOVE-IDENTIFIED APPLICATION. See Instruction Sheet on page 2.

This petition must be timely filed electronically using the USPTO electronic filing system, EFS-Web.

1. By filing this petition:

   Applicant is requesting early publication: Applicant hereby requests early publication under 37 CFR 1.219 and the publication fee set forth in 37 CFR 1.18(d) accompanies this request.

2. By filing this petition: applicant is agreeing to make an election without traverse in a telephonic interview and elect an invention that meets the eligibility requirements for the Green Technology Pilot Program, if the Office determines that the claims are not obviously directed to a single invention. See Instruction Sheet.

3. This request is accompanied by statements of special status for the eligibility requirement.

4. The application contains no more than three (3) independent claims and twenty (20) total claims.

5. The application does not contain any multiple dependent claims.

6. Other attachments: Statement in Support of Petition

Signature		Date	5.2.11
Name (Print/Typed)	Susan D. Betcher	Registration Number	43,498

Note: Signatures of all the inventors or assignees of record of the entire interest or their representative(s) are required in accordance with 37 CFR 1.33 and 11.18. Please see 37 CFR 1.4(d) for the form of the signature. If necessary, submit multiple forms if more than one signature, see below.*

☐ *Total of 1 forms are submitted.

Docket No.: 695458602US
(PATENT)

IN THE UNITED STATES PATENT AND TRADEMARK OFFICE

In re Patent Application of:
Roy E. McAlister, P.E.

Application No.: 13/026,996

Confirmation No.: 5929

Filed: February 14, 2011

Art Unit: 1771

For: REACTOR VESSELS WITH TRANSMISSIVE SURFACES FOR PRODUCING HYDROGEN-BASED FUELS AND STRUCTURAL ELEMENTS, AND ASSOCIATED SYSTEMS AND METHODS

Examiner: Not Yet Assigned

STATEMENT IN SUPPORT OF PETITION TO MAKE SPECIAL

MS Missing Parts
Commissioner for Patents
P.O. Box 1450
Alexandria, VA 22313-1450

Sir:

This paper is filed in support of the Petition to Make Special under the Green Technology Pilot Program filed concurrently herewith.

Petitioner hereby states that the referenced application is directed to a single invention that materially enhances the quality of the environment, or that materially contributes to: (1) the discovery or development of renewable energy resources; (2) the more efficient utilization and conservation of energy resources; or (3) green house gas emission reduction.

More specifically, the specification and claims are directed to the development of renewable energy resources and green house gas emission reduction by providing reactor vessels with transmissive surfaces for producing hydrogenated fuels.

In light of the above, it is requested that the Petition to Make Special under the Green Technology Pilot Program be granted.

Applicant believes no fee is due with this response. However, if a fee is due, please charge our Deposit Account No. 50-0665, under Order No. 695458602US from which the undersigned is authorized to draw.

Dated: 5.2.11

Respectfully submitted,

By _____
Susan D. Betcher
Registration No.: 43,498
PERKINS COIE LLP
P.O. Box 1247
Seattle, Washington 98111-1247
(206) 359-8000
(206) 359-7198 (Fax)
Attorney for Applicant

UNITED STATES PATENT AND TRADEMARK OFFICE

UNITED STATES DEPARTMENT OF COMMERCE
United States Patent and Trademark Office
Address: COMMISSIONER FOR PATENTS
P.O. Box 1450
Alexandria, Virginia 22313-1450
www.uspto.gov

APPLICATION NO.	FILING DATE	FIRST NAMED INVENTOR	ATTORNEY DOCKET NO.	CONFIRMATION NO.
13/026,996	02/14/2011	Roy Edward McAlister	695458602US	5929

25096 7590 05/26/2011
PERKINS COIE LLP
PATENT-SEA
P.O. BOX 1247
SEATTLE, WA 98111-1247

EXAMINER

ART UNIT	PAPER NUMBER
1771	

NOTIFICATION DATE	DELIVERY MODE
05/26/2011	ELECTRONIC

Please find below and/or attached an Office communication concerning this application or proceeding.

The time period for reply, if any, is set in the attached communication.

Notice of the Office communication was sent electronically on above-indicated "Notification Date" to the following e-mail address(es):

patentprocurement@perkinscoie.com

UNITED STATES PATENT AND TRADEMARK OFFICE

Commissioner for Patents
United States Patent and Trademark Office
P.O. Box 1450
Alexandria, VA 22313-1450
www.uspto.gov

PERKINS COIE LLP
PATENT-SEA
P.O. BOX 1247
SEATTLE WA 98111-1247

5/26/11

In re Application of	:	
McAlister	:	DECISION ON PETITION
Application No. 13/026,996	:	TO MAKE SPECIAL UNDER
Filed: 2/14/2011	:	THE GREEN TECHNOLOGY
Attorney Docket No. **695458602US**	:	PILOT PROGRAM

This is a decision on the petition under 37 CFR 1.102, filed 5/2/2011, to make the above-identified application special under the pilot program for applications pertaining to Green Technologies as set forth in 74 Federal Register Notice 64666 (December 8, 2009) and amended by 75 Federal Register Notice 28554 (May 21, 2010) and 75 Federal Register Notice 69049 (November 10, 2010).

The petition is **GRANTED**.

A grantable petition to make an application special under 37 CFR 1.102 and the pilot program as set forth in 74 FR 64666 must be directed to a nonprovisional application filed under 35 USC 111(a) or be a national stage entry under 35 USC 371, exclusive of any reissue applications.

In order to qualify for special status, the following requirements must be met. 1) The application must have no more than 3 independent claims and no more than 20 total claims. 2) The application must not contain any multiple dependent claims. 3) The petition must state the basis for seeking special status, i.e., the claimed invention either: A) materially enhances the quality of the environment or B) materially contributes to: i) the discovery or development of renewable energy resources, ii) the more efficient utilization and conservation of energy resources, or iii) greenhouse gas emission reduction. 4) If the disclosure is not clear on its face that the claimed invention materially contributes under category (A) or (B), the petition must be accompanied by a statement by the applicant, assignee, or an attorney/agent registered to practice before the Office explaining how the materiality standard is met. 5) A statement that applicant will agree to make an election without traverse in a telephonic interview if a restriction requirement is made by the examiner. 6) The petition to make special must be filed electronically. 7) The petition must be filed at least one day prior to the date that a first Office Action appears in the Patent Application Information Retrieval (PAIR) system. 8) The petition must be accompanied by a

request for early publication in compliance with 37 CFR 1.219 and include the publication fee as set forth in 37 CFR 1.18(d).

The requirement for a fee for consideration of the petition to make special for applications pertaining to Green Technologies has been waived.

The instant petition complies with items 1 – 8 above. Accordingly, the above-identified application has been accorded "special" status.

Telephone inquires concerning this decision should be directed to Tom Dunn at 571-272-1171.

The application is being forwarded to the Technology Center Art Unit 1771 for action on the merits commensurate with this decision.

/Tom Dunn/

Tom Dunn
Quality Assurance Specialist
Technology Center 1700

Attorney's Docket No. 34786-547002US
Customer Number 64046

IN THE UNITED STATES PATENT AND TRADEMARK OFFICE

Serial No.:	13/027,000	TC/Art Unit:	2877
Applicant:	Alfred Feitisch *et al.*	Conf. No.:	5937
Filing Date:	February 14, 2011	Examiner:	Not Yet Assigned
Title:	**VALIDATION AND CORRECTION OF SPECTROMETER PERFORMANCE USING A VALIDATION CELL**		

Mail Stop Petition
Commissioner for Patents
P.O. Box 1450
Alexandria, VA 22313-1450

SUBMISSION IN SUPPORT OF PETITION TO MAKE SPECIAL UNDER THE GREEN TECHNOLOGY PILOT PROGRAM

The following pages include items submitted in support of the attached *Petition to Make Special Under the Green Technology Pilot Program*. Prompt consideration and grant of this petition is hereby requested in light of the statements on the following pages.

CERTIFICATE OF ELECTRONIC TRANSMISSION

I hereby certify that this correspondence is being electronically transmitted to the Patent and Trademark Office on the date indicated below in accordance with 37 CFR 1.8(a)(1)(i)(C).

August 15, 2011
Date of Transmission

Signature

Kethya Teuk
Typed or Printed Name of Person Signing Certificate

REMARKS

Number of Claims. The instant application, which is a non-reissue, non-provisional utility application filed under 35 U.S.C. 111(a), contains no more than three (3) independent claims and twenty (20) total claims and no multiple dependent claims. A preliminary amendment is submitted with to cancel claims in excess of these requirements.

Early Publication Request. Per the attached Petition to Make Special Under the Green Technology Pilot Program (Form PTO/SB/420), a request for early publication is hereby submitted in compliance with 37 CFR §1.219. The publication fee set forth in 37 CFR §1.18(d) is also paid in association with this submission.

No first Office Action Yet Mailed. As of the date of this filing, no first Office action (which may be an Office action containing only a restriction requirement) appears in the Patent Application Information Retrieval (PAIR) system.

Single Invention. The claims of the instant application are believed to be directed to a single invention. If the Office determines that the claims are directed to multiple inventions (e.g., in a restriction requirement), the Office is requested to initiate a telephonic interview to the undersigned who agrees to elect, without traverse, an invention that meets the eligibility requirements of the Green Technology Pilot Program.

Statement of Special Status for the Eligibility Requirement. The subject matter of the currently pending claims of this application materially enhances the quality of the environment and/or materially contributes to: (1) the discovery or development of renewable energy resources, (2) the more efficient utilization and conservation of energy resources, and/or (3) green house gas emission reduction.

The claims of the instant application are drawn to systems, methods, and the like for enabling an absorption spectrometer to re-calibrate itself, for example using an iterative process in which one or more operating and/or analytical parameters of the laser absorption spectrometer are adjusted to find new operating and/or analytical conditions that cause the spectrometer to perform more closely to a previously recorded calibration condition. Such capabilities can result in significantly enhanced process control abilities, for example in petroleum refining operations, and can lead to substantial savings in energy usage (e.g. by enabling more efficient operation of the process and minimizing process downtime by enabling dynamic and continuous recalibration of spectroscopic analyzers) and in end-product quality and energy content.

CONCLUSION

On the basis of the foregoing, the instant application is believed to be in condition for acceptance into the *Green Technology Pilot Program.* The Statement of Special Status submitted herein discusses one or more advantages relating to implementations of the instantly claimed subject matter that can enhance the environment or contribute to energy conservation or renewable energy generation or to reduction in greenhouse gas emissions. Other advantages or benefits may also flow from implementations of the current subject matter. Nothing in this paper should be construed as an intent to concede any issue with regard to any claim, except as specifically stated in this paper.

As noted above, the Publication Fee set forth in 37 CFR §1.18(d) is paid in association with this submission. No other fees are believed to be due. However, the Commissioner is hereby authorized to charge any additional claim fees and any additional fees that may be due, or credit any overpayment of same, to Deposit Account No. 50-0311, Reference No. 34786-547002US. If there are any questions regarding this reply, the Examiner is encouraged to contact the undersigned at the telephone number provided below.

Respectfully submitted,

Date: August 15, 2011

Michael D. Van Loy, Reg. No. 52,315

Mintz, Levin, Cohn, Ferris, Glovsky and Popeo, P.C.
3580 Carmel Mountain Road, Suite 300
San Diego, CA 92130
Customer No. 64046
Tel.: 858/314-1559
Fax: 858/314-1501

Doc Code: PET.GREEN
Document Description: Petition for Green Tech Pilot

PTO/SB/420 (03-11)

PETITION TO MAKE SPECIAL UNDER THE GREEN TECHNOLOGY PILOT PROGRAM

Attorney Docket Number: 34786-547002US	Application Number (if known): 13/027,000	Filing date: February 14, 2011

First Named Inventor: Alfred Feitisch

Title: VALIDATION AND CORRECTION OF SPECTROMETER PERFORMANCE USING A VALIDATION CELL

APPLICANT HEREBY REQUESTS TO PARTICIPATE IN THE GREEN TECHNOLOGY PILOT PROGRAM FOR THE ABOVE-IDENTIFIED APPLICATION. See Instruction Sheet on page 2.

This petition must be timely filed electronically using the USPTO electronic filing system, EFS-Web.

1. By filing this petition:

   Applicant is requesting early publication: Applicant hereby requests early publication under 37 CFR 1.219 and the publication fee set forth in 37 CFR 1.18(d) accompanies this request.

2. By filing this petition: applicant is agreeing to make an election without traverse in a telephonic interview and elect an invention that meets the eligibility requirements for the Green Technology Pilot Program, if the Office determines that the claims are not obviously directed to a single invention. See Instruction Sheet.

3. This request is accompanied by statements of special status for the eligibility requirement.

4. The application contains no more than three (3) independent claims and twenty (20) total claims.

5. The application does not contain any multiple dependent claims.

6. Other attachments: _____

Signature	Date 8/15/2011
Name (Print/Typed) Michael Van Loy (Applicant's representative)	Registration Number 52315

Note: *Signatures of all the inventors or assignees of record of the entire interest or their representative(s) are required in accordance with 37 CFR 1.33 and 11.18. Please see 37 CFR 1.4(d) for the form of the signature. If necessary, submit multiple forms for more than one signature, see below*.*

☐ *Total of_____ forms are submitted.

If you need assistance in completing the form, call 1-800-PTO-9199 and select option 2.

UNITED STATES PATENT AND TRADEMARK OFFICE

UNITED STATES DEPARTMENT OF COMMERCE
United States Patent and Trademark Office
Address: COMMISSIONER FOR PATENTS
P.O. Box 1450
Alexandria, Virginia 22313-1450
www.uspto.gov

APPLICATION NO.	FILING DATE	FIRST NAMED INVENTOR	ATTORNEY DOCKET NO.	CONFIRMATION NO.
13/027,000	02/14/2011	ALFRED FEITISCH	34786-547002US	5937

64046 7590 09/22/2011
MINTZ, LEVIN, COHN, FERRIS, GLOVSKY AND POPEO, P.C
ONE FINANCIAL CENTER
BOSTON, MA 02111

EXAMINER

ART UNIT	PAPER NUMBER
2877	

MAIL DATE	DELIVERY MODE
09/22/2011	PAPER

Please find below and/or attached an Office communication concerning this application or proceeding.

The time period for reply, if any, is set in the attached communication.

UNITED STATES PATENT AND TRADEMARK OFFICE

Commissioner for Patents
United States Patent and Trademark Office
P.O. Box 1450
Alexandria, VA 22313-1450
www.uspto.gov

MINTZ, LEVIN, COHN, FERRIS, GLOVSKY AND POPEO, P.C
ONE FINANCIAL CENTER
BOSTON MA 02111

In re Application of	:	
FEITISCH et al.	:	DECISION ON PETITION
Application No. 13/027,000	:	TO MAKE SPECIAL UNDER
Filed: February 14, 2010	:	THE GREEN TECHNOLOGY
Attorney Docket No. 34786-547002US	:	PILOT PROGRAM

This is a decision on the petition under 37 CFR 1.102, filed on August 15, 2011, to make the above-identified application special under the pilot program for applications pertaining to Green Technologies as set forth 74 Federal Register Notice 64666 (December 8, 2009) and amended by 75 Federal Register Notice 28554 (May 21, 2010) and 75 Federal Register Notice 69049 (November 10, 2010).

The petition is **DISMISSED**.

If reconsideration of this decision is desired, a petition for reconsideration must be filed within ONE (1) MONTH OR THIRTY (30) DAYS from the mail date of this decision, whichever is longer. No extension of this time limit can be granted under 37 CFR 1.136(a) or (b). The petition for reconsideration should include an exhaustive attempt to provide the lacking item(s) noted below, since, after a decision on the petition for reconsideration, no further reconsideration or review of the matter will be undertaken by the Director.

A grantable petition to make an application special under 37 CFR 1.102 and the pilot program as set forth in 74 FR 64666 must be directed to a nonprovisional application filed under 35 USC 111(a) or be a national stage entry under 35 USC 371, exclusive of any reissue applications and be filed prior to the date of the notice, December 8, 2009.

In order to qualify for special status, the following requirements must be met. 1) The application must have no more than 3 independent claims and no more than 20 total claims. 2) The application must not contain any multiple dependent claims. 3) The petition must state the basis for seeking special status, i.e., the claimed invention either: A) materially enhances the quality of the environment or B) materially contributes to: i) the discovery or development of renewable energy resources, ii) the more efficient utilization and conservation of energy resources, or iii) greenhouse gas emission reduction. 4) If the disclosure is not clear on its face that the claimed invention materially contributes under category (A) or (B), the petition must be accompanied by a statement by the applicant, assignee, or an attorney/agent registered to practice before the Office explaining how the materiality standard is met. 5) A statement that applicant will agree to make an election without traverse in a telephonic interview if a restriction requirement is made

by the examiner. 6) The petition to make special must be filed electronically. 7) The petition must be filed at least one day prior to the date that a first Office Action appears in the Patent Application Information Retrieval (PAIR) system. 8) The petition must be accompanied by a request for early publication in compliance with 37 CFR 1.219 and include the publication fee as set forth in 37 CFR 1.18(d).

The requirement for a fee for consideration of the petition to make special for applications pertaining to Green Technologies has been waived.

The petition lacks item 4.

In regard to item 4, applicant's statement pertaining to how the materiality standard is met does not satisfy the requirements for this pilot. The instant petition includes a statement identifying the basis for the special status as having claims which materially contributes to the development of renewable energy resources, efficient energy utilization/conservation, and green house gas reduction. The materiality standard does not permit an applicant to speculate as to how a hypothetical end-user might specially apply the claimed invention in a manner that could contribute to the development of renewable energy resources, efficient energy utilization/conservation, and green house gas reduction. Any argument that the claimed invention can be used energy conservation, green house gas reduction or development of renewable energy would be considered speculative as to how a hypothetical end-user might specially apply to the claimed method of absorption spectrometer. The claims are not directed to the energy conservation, renewable energy, or reduction of green house gas emissions.

Any reconsideration of this decision should be submitted through the USPTO electronic filing system, EFS-Web, and selecting the document description of "Petition for Green Tech Pilot" on the EFS-Web screen.

Telephone inquiries concerning this decision should be directed to Colleen Dunn at 571-272-1170.

The application is being forwarded to the appropriate Technology Center Art Unit for action on the merits commensurate with this decision.

/Colleen Dunn/

Colleen Dunn
Quality Assurance Specialist
Technology Center 2800

Doc Code: PET.GREEN
Document Description: Petition for Green Tech Pilot

PTO/SB/420 (11-10)
Approved for use through 01/31/2011. OMB 0651-0062
U.S. Patent and Trademark Office; U.S. DEPARTMENT OF COMMERCE
Under the Paperwork Reduction Act of 1995, no persons are required to respond to a collection of information unless it displays a valid OMB control number.

PETITION TO MAKE SPECIAL UNDER THE GREEN TECHNOLOGY PILOT PROGRAM

Attorney Docket Number:	695458603US	Application Number (if known): 13/027,015- Conf. #5972	Filing date: February 14, 2011
First Named Inventor:	Roy E. McAlister, P.E.		
Title:	CHEMICAL REACTORS WITH RE-RADIATING SURFACES AND ASSOCIATED SYSTEMS AND METHODS		

APPLICANT HEREBY REQUESTS TO PARTICIPATE IN THE GREEN TECHNOLOGY PILOT PROGRAM FOR THE ABOVE-IDENTIFIED APPLICATION. See Instruction Sheet on page 2.

This petition must be timely filed electronically using the USPTO electronic filing system, EFS-Web.

1. By filing this petition:

   Applicant is requesting early publication: Applicant hereby requests early publication under 37 CFR 1.219 and the publication fee set forth in 37 CFR 1.18(d) accompanies this request.

2. By filing this petition: applicant is agreeing to make an election without traverse in a telephonic interview and elect an invention that meets the eligibility requirements for the Green Technology Pilot Program, if the Office determines that the claims are not obviously directed to a single invention. See Instruction Sheet.

3. This request is accompanied by statements of special status for the eligibility requirement.

4. The application contains no more than three (3) independent claims and twenty (20) total claims.

5. The application does not contain any multiple dependent claims.

6. Other attachments: Statement in Support of Petition

Signature		Date	5.9.11
Name (Print/Typed)	Susan D. Betcher	Registration Number	43,498

Note: Signatures of all the inventors or assignees of record of the entire interest or their representative(s) are required in accordance with 37 CFR 1.33 and 11.18. Please see 37 CFR 1.4(d) for the form of the signature. If necessary, submit multiple forms if more than one signature, see below.*

☐ *Total of 1 forms are submitted.

Docket No.: 695458603US
(PATENT)

IN THE UNITED STATES PATENT AND TRADEMARK OFFICE

In re Patent Application of:
Roy E. McAlister, P.E.

Application No.: 13/027,015

Confirmation No.: 5972

Filed: February 14, 2011

Art Unit: 1736

For: CHEMICAL REACTORS WITH RE-RADIATING SURFACES AND ASSOCIATED SYSTEMS AND METHODS

Examiner: Not Yet Assigned

STATEMENT IN SUPPORT OF PETITION TO MAKE SPECIAL

MS Missing Parts
Commissioner for Patents
P.O. Box 1450
Alexandria, VA 22313-1450

Sir:

This paper is filed in support of the Petition to Make Special under the Green Technology Pilot Program filed concurrently herewith.

Petitioner hereby states that the referenced application is directed to a single invention that materially enhances the quality of the environment, or that materially contributes to: (1) the discovery or development of renewable energy resources; (2) the more efficient utilization and conservation of energy resources; or (3) green house gas emission reduction.

More specifically, the specification and claims are directed to a chemical reactor which provides the more efficient utilization and conservation of energy resources.

In light of the above, it is requested that the Petition to Make Special under the Green Technology Pilot Program be granted.

Docket No.: 695458603US
(PATENT)

Applicant believes no fee is due with this response. However, if a fee is due, please charge our Deposit Account No. 50-0665, under Order No. 695458603US from which the undersigned is authorized to draw.

Dated: 6.9.11

Respectfully submitted,

By

Susan D. Betcher
Registration No.: 43,498
PERKINS COIE LLP
P.O. Box 1247
Seattle, Washington 98111-1247
(206) 359-8000
(206) 359-7198 (Fax)
Attorney for Applicant

UNITED STATES PATENT AND TRADEMARK OFFICE

UNITED STATES DEPARTMENT OF COMMERCE
United States Patent and Trademark Office
Address: COMMISSIONER FOR PATENTS
P.O. Box 1450
Alexandria, Virginia 22313-1450
www.uspto.gov

APPLICATION NO.	FILING DATE	FIRST NAMED INVENTOR	ATTORNEY DOCKET NO.	CONFIRMATION NO.
13/027,015	02/14/2011	Roy Edward McAlister	695458603US	5972

25096 7590 05/26/2011
PERKINS COIE LLP
PATENT-SEA
P.O. BOX 1247
SEATTLE, WA 98111-1247

EXAMINER

ART UNIT	PAPER NUMBER
1736	

NOTIFICATION DATE	DELIVERY MODE
05/26/2011	ELECTRONIC

Please find below and/or attached an Office communication concerning this application or proceeding.

The time period for reply, if any, is set in the attached communication.

Notice of the Office communication was sent electronically on above-indicated "Notification Date" to the following e-mail address(es):

patentprocurement@perkinscoie.com

UNITED STATES PATENT AND TRADEMARK OFFICE

Commissioner for Patents
United States Patent and Trademark Office
P.O. Box 1450
Alexandria, VA 22313-1450
www.uspto.gov

5/26/11

PERKINS COIE LLP
PATENT-SEA
P.O. BOX 1247
SEATTLE WA 98111-1247

In re Application of	:	
McAlister	:	DECISION ON PETITION
Application No. 13/027,015	:	TO MAKE SPECIAL UNDER
Filed: 2/14/2011	:	THE GREEN TECHNOLOGY
Attorney Docket No. **695458603US**	:	PILOT PROGRAM

This is a decision on the petition under 37 CFR 1.102, filed 5/9/2011, to make the above-identified application special under the pilot program for applications pertaining to Green Technologies as set forth in 74 Federal Register Notice 64666 (December 8, 2009) and amended by 75 Federal Register Notice 28554 (May 21, 2010) and 75 Federal Register Notice 69049 (November 10, 2010).

The petition is **GRANTED**.

A grantable petition to make an application special under 37 CFR 1.102 and the pilot program as set forth in 74 FR 64666 must be directed to a nonprovisional application filed under 35 USC 111(a) or be a national stage entry under 35 USC 371, exclusive of any reissue applications.

In order to qualify for special status, the following requirements must be met. 1) The application must have no more than 3 independent claims and no more than 20 total claims. 2) The application must not contain any multiple dependent claims. 3) The petition must state the basis for seeking special status, i.e., the claimed invention either: A) materially enhances the quality of the environment or B) materially contributes to: i) the discovery or development of renewable energy resources, ii) the more efficient utilization and conservation of energy resources, or iii) greenhouse gas emission reduction. 4) If the disclosure is not clear on its face that the claimed invention materially contributes under category (A) or (B), the petition must be accompanied by a statement by the applicant, assignee, or an attorney/agent registered to practice before the Office explaining how the materiality standard is met. 5) A statement that applicant will agree to make an election without traverse in a telephonic interview if a restriction requirement is made by the examiner. 6) The petition to make special must be filed electronically. 7) The petition must be filed at least one day prior to the date that a first Office Action appears in the Patent Application Information Retrieval (PAIR) system. 8) The petition must be accompanied by a

request for early publication in compliance with 37 CFR 1.219 and include the publication fee as set forth in 37 CFR 1.18(d).

The requirement for a fee for consideration of the petition to make special for applications pertaining to Green Technologies has been waived.

The instant petition complies with items 1 – 8 above. Accordingly, the above-identified application has been accorded "special" status.

Telephone inquires concerning this decision should be directed to Tom Dunn at 571-272-1171.

The application is being forwarded to the Technology Center Art Unit 1736 for action on the merits commensurate with this decision.

/Tom Dunn/

Tom Dunn
Quality Assurance Specialist
Technology Center 1700

Doc Code: PET.GREEN
Document Description: Petition for Green Tech Pilot

PTO/SB/420 (11-10)
Approved for use through 01/31/2011. OMB 0651-0062
U.S. Patent and Trademark Office; U.S. DEPARTMENT OF COMMERCE
Under the Paperwork Reduction Act of 1995, no persons are required to respond to a collection of information unless it displays a valid OMB control number.

PETITION TO MAKE SPECIAL UNDER THE GREEN TECHNOLOGY PILOT PROGRAM

Attorney Docket Number:	695458313US1	Application Number (if known): 13/027,051- Conf. #6043	Filing date: February 14, 2011
First Named Inventor:	Roy E. McAlister, P.E.		
Title:	FUEL INJECTOR ASSEMBLIES HAVING ACOUSTICAL FORCE MODIFIERS AND ASSOCIATED METHODS OF USE AND MANUFACTURE		

APPLICANT HEREBY REQUESTS TO PARTICIPATE IN THE GREEN TECHNOLOGY PILOT PROGRAM FOR THE ABOVE-IDENTIFIED APPLICATION. See Instruction Sheet on page 2.

This petition must be timely filed electronically using the USPTO electronic filing system, EFS-Web.

1. By filing this petition:

   Applicant is requesting early publication: Applicant hereby requests early publication under 37 CFR 1.219 and the publication fee set forth in 37 CFR 1.18(d) accompanies this request.

2. By filing this petition: applicant is agreeing to make an election without traverse in a telephonic interview and elect an invention that meets the eligibility requirements for the Green Technology Pilot Program, if the Office determines that the claims are not obviously directed to a single invention. See Instruction Sheet.

3. This request is accompanied by statements of special status for the eligibility requirement.

4. The application contains no more than three (3) independent claims and twenty (20) total claims.

5. The application does not contain any multiple dependent claims.

6. Other attachments: Statment in Support of Petition

Signature	Date 5.10.11
Name (Print/Typed) Susan D. Betcher	Registration Number 43,498

Note: Signatures of all the inventors or assignees of record of the entire interest or their representative(s) are required in accordance with 37 CFR 1.33 and 11.18. Please see 37 CFR 1.4(d) for the form of the signature. If necessary, submit multiple forms if more than one signature, see below.*

☐ *Total of 1 forms are submitted.

Docket No.: 695458313US1
(PATENT)

IN THE UNITED STATES PATENT AND TRADEMARK OFFICE

In re Patent Application of:
Roy E. McAlister, P.E.

Application No.: 13/027,051

Confirmation No.: 6043

Filed: February 14, 2011

Art Unit: 3747

For: FUEL INJECTOR ASSEMBLIES HAVING ACOUSTICAL FORCE MODIFIERS AND ASSOCIATED METHODS OF USE AND MANUFACTURE

Examiner: Not Yet Assigned

STATEMENT IN SUPPORT OF PETITION TO MAKE SPECIAL

MS Missing Parts
Commissioner for Patents
P.O. Box 1450
Alexandria, VA 22313-1450

Sir:

This paper is filed in support of the Petition to Make Special under the Green Technology Pilot Program filed concurrently herewith.

Petitioner hereby states that the referenced application is directed to a single invention that materially enhances the quality of the environment, or that materially contributes to: (1) the discovery or development of renewable energy resources; (2) the more efficient utilization and conservation of energy resources; or (3) green house gas emission reduction.

More specifically, the specification and claims are directed to fuel injector assemblies having acoustical force modifiers for more efficient utilization and conservation of energy resources and for green house gas emissions reduction.

In light of the above, it is requested that the Petition to Make Special under the Green Technology Pilot Program be granted.

Applicant believes no fee is due with this response. However, if a fee is due, please charge our Deposit Account No. 50-0665, under Order No. 695458313US1 from which the undersigned is authorized to draw.

Dated: 5.10.11

Respectfully submitted,

By

Susan D. Betcher
Registration No.: 43,498
PERKINS COIE LLP
P.O. Box 1247
Seattle, Washington 98111-1247
(206) 359-8000
(206) 359-7198 (Fax)
Attorney for Applicant

UNITED STATES PATENT AND TRADEMARK OFFICE

UNITED STATES DEPARTMENT OF COMMERCE
United States Patent and Trademark Office
Address: COMMISSIONER FOR PATENTS
P.O. Box 1450
Alexandria, Virginia 22313-1450
www.uspto.gov

APPLICATION NO.	FILING DATE	FIRST NAMED INVENTOR	ATTORNEY DOCKET NO.	CONFIRMATION NO.
13/027,051	02/14/2011	Roy E. McAlister	695458313US1	6043

25096 7590 06/15/2011
PERKINS COIE LLP
PATENT-SEA
P.O. BOX 1247
SEATTLE, WA 98111-1247

EXAMINER

ART UNIT	PAPER NUMBER
3752	

NOTIFICATION DATE	DELIVERY MODE
06/15/2011	ELECTRONIC

Please find below and/or attached an Office communication concerning this application or proceeding.

The time period for reply, if any, is set in the attached communication.

Notice of the Office communication was sent electronically on above-indicated "Notification Date" to the following e-mail address(es):

patentprocurement@perkinscoie.com

UNITED STATES PATENT AND TRADEMARK OFFICE

Commissioner for Patents
United States Patent and Trademark Office
P.O. Box 1450
Alexandria, VA 22313-1450
www.uspto.gov

PERKINS COIE LLP
PATENT-SEA
P.O. BOX 1247
SEATTLE WA 98111-1247

In re Application of	:	
MCALISTER, ROY E.	:	DECISION ON PETITION
Application No. 13/027051	:	TO MAKE SPECIAL UNDER
Filed: February 14, 2011	:	THE GREEN TECHNOLOGY
Attorney Docket No. 695458313US1	:	PILOT PROGRAM

This is a decision on the petition under 37 CFR 1.102, filed May 10, 2011, to make the above-identified application special under the pilot program for applications pertaining to Green Technologies as set forth in 74 Federal Register Notice 64666 (December 8, 2009) and amended by 75 Federal Register Notice 28554 (May 21, 2010) and 75 Federal Register Notice 69049 (November 10, 2010).

The petition is **granted**.

A grantable petition to make an application special under 37 CFR 1.102 and the pilot program as set forth in 74 FR 64666 must be directed to a nonprovisional application filed under 35 USC 111(a) or be a national stage entry under 35 USC 371, exclusive of any reissue applications.

If reconsideration of this decision is desired, a petition for reconsideration must be filed within ONE (1) MONTH OR THIRTY (30) DAYS from the mail date of this decision, whichever is longer. No extension of this time limit can be granted under 37 CFR 1.136(a) or (b). The petition for reconsideration should include an exhaustive attempt to provide the lacking item(s) noted below, since, after a decision on the petition for reconsideration, no further reconsideration or review of the matter will be undertaken by the Director.

In order to qualify for special status, the following requirements must be met. 1) The application must have no more than 3 independent claims and no more than 20 total claims. 2) The application must not contain any multiple dependent claims. 3) The petition must state the basis for seeking special status, i.e., the claimed invention either: A) materially enhances the quality of the environment or B) materially contributes to: i) the discovery or development of renewable energy resources, ii) the more efficient utilization and conservation of energy resources, or iii)

greenhouse gas emission reduction. 4) If the disclosure is not clear on its face that the claimed invention materially contributes under category (A) or (B), the petition must be accompanied by a statement by the applicant, assignee, or an attorney/agent registered to practice before the Office explaining how the materiality standard is met. 5) A statement that applicant will agree to make an election without traverse in a telephonic interview if a restriction requirement is made by the examiner. 6) The petition to make special must be filed electronically. 7) The petition must be filed at least one day prior to the date that a first Office Action appears in the Patent Application Information Retrieval (PAIR) system. 8) The petition must be accompanied by a request for early publication in compliance with 37 CFR 1.219 and include the publication fee as set forth in 37 CFR 1.18(d).

The requirement for a fee for consideration of the petition to make special for applications pertaining to Green Technologies has been waived.

The instant petition complies with items 1 – 8 above. Accordingly, the above-identified application has been accorded "special" status.

Telephone inquires concerning this decision should be directed to Henry C. Yuen at 571-272-4856.

This application will be forwarded to the Technology Center Art Unit 3752 for action on the merits commensurate with this decision.

/Henry C. Yuen/

Henry C. Yuen
Quality Assurance Specialist
Technology Center TC 3700

Doc Code: PET.GREEN
Document Description: Petition for Green Tech Pilot

PTO/SB/420 (11-10)
Approved for use through 01/31/2011. OMB 0651-0062
U.S. Patent and Trademark Office; U.S. DEPARTMENT OF COMMERCE
Under the Paperwork Reduction Act of 1995, no persons are required to respond to a collection of information unless it displays a valid OMB control number.

PETITION TO MAKE SPECIAL UNDER THE GREEN TECHNOLOGY PILOT PROGRAM

Attorney Docket Number:	695458616US	Application Number (if known): 13/027,060- Conf. #6062	Filing date: February 14, 2011
First Named Inventor:	Roy E. McAlister, P.E.		
Title:	REACTOR VESSELS WITH PRESSURE AND HEAT TRANSFER FEATURES FOR PRODUCING HYDROGEN-BASED FUELS AND STRUCTURAL ELEMENTS, AND ASSOCIATED SYSTEMS AND METHODS		

APPLICANT HEREBY REQUESTS TO PARTICIPATE IN THE GREEN TECHNOLOGY PILOT PROGRAM FOR THE ABOVE-IDENTIFIED APPLICATION. See Instruction Sheet on page 2.

This petition must be timely filed electronically using the USPTO electronic filing system, EFS-Web.

1. By filing this petition:

   <u>Applicant is requesting early publication</u>: Applicant hereby requests early publication under 37 CFR 1.219 and the publication fee set forth in 37 CFR 1.18(d) accompanies this request.

2. By filing this petition: applicant is agreeing to make an election without traverse in a telephonic interview and elect an invention that meets the eligibility requirements for the Green Technology Pilot Program, if the Office determines that the claims are not obviously directed to a single invention. See Instruction Sheet.

3. This request is accompanied by statements of special status for the eligibility requirement.

4. The application contains no more than three (3) independent claims and twenty (20) total claims.

5. The application does not contain any multiple dependent claims.

6. Other attachments: Statement in Support of Petition

Signature		Date	6.1.11
Name (Print/Typed)	Susan D. Betcher	Registration Number	43,498

Note: Signatures of all the inventors or assignees of record of the entire interest or their representative(s) are required in accordance with 37 CFR 1.33 and 11.18. Please see 37 CFR 1.4(d) for the form of the signature. If necessary, submit multiple forms if more than one signature, see below.*

☐ *Total of 1 forms are submitted.

Docket No.: 695458616US
(PATENT)

IN THE UNITED STATES PATENT AND TRADEMARK OFFICE

In re Patent Application of:
Roy E. McAlister, P.E.

Application No.: 13/027,060

Confirmation No.: 6062

Filed: February 14, 2011

Art Unit: 1771

For: REACTOR VESSELS WITH PRESSURE AND HEAT TRANSFER FEATURES FOR PRODUCING HYDROGEN-BASED FUELS AND STRUCTURAL ELEMENTS, AND ASSOCIATED SYSTEMS AND METHODS

Examiner: Not Yet Assigned

STATEMENT IN SUPPORT OF PETITION TO MAKE SPECIAL

MS Missing Parts
Commissioner for Patents
P.O. Box 1450
Alexandria, VA 22313-1450

Sir:

This paper is filed in support of the Petition to Make Special under the Green Technology Pilot Program filed concurrently herewith.

Petitioner hereby states that the referenced application is directed to a single invention that materially enhances the quality of the environment, or that materially contributes to: (1) the discovery or development of renewable energy resources; (2) the more efficient utilization and conservation of energy resources; or (3) green house gas emission reduction.

More specifically, the specification and claims are directed to systems and methods for producing hydrogen-based fuels by more efficient utilization and conservation of energy resources.

In light of the above, it is requested that the Petition to Make Special under the Green Technology Pilot Program be granted.

Applicant believes no fee is due with this response. However, if a fee is due, please charge our Deposit Account No. 50-0665, under Order No. 695458616US from which the undersigned is authorized to draw.

Dated: 6.1.11

Respectfully submitted,

By

Susan D. Betcher
Registration No.: 43,498
PERKINS COIE LLP
P.O. Box 1247
Seattle, Washington 98111-1247
(206) 359-6088
(206) 359-9000 (Fax)
Attorney for Applicant

UNITED STATES PATENT AND TRADEMARK OFFICE

UNITED STATES DEPARTMENT OF COMMERCE
United States Patent and Trademark Office
Address: COMMISSIONER FOR PATENTS
P.O. Box 1450
Alexandria, Virginia 22313-1450
www.uspto.gov

APPLICATION NO.	FILING DATE	FIRST NAMED INVENTOR	ATTORNEY DOCKET NO.	CONFIRMATION NO.
13/027,060	02/14/2011	Roy Edward McAlister	695458616US	6062

25096 7590 07/14/2011
PERKINS COIE LLP
PATENT-SEA
P.O. BOX 1247
SEATTLE, WA 98111-1247

EXAMINER

ART UNIT	PAPER NUMBER
1621	

NOTIFICATION DATE	DELIVERY MODE
07/14/2011	ELECTRONIC

Please find below and/or attached an Office communication concerning this application or proceeding.

The time period for reply, if any, is set in the attached communication.

Notice of the Office communication was sent electronically on above-indicated "Notification Date" to the following e-mail address(es):

patentprocurement@perkinscoie.com

UNITED STATES PATENT AND TRADEMARK OFFICE

Commissioner for Patents
United States Patent and Trademark Office
P.O. Box 1450
Alexandria, VA 22313-1450
www.uspto.gov

PERKINS COIE LLP
PATENT-SEA
P.O. BOX 1247
SEATTLE WA 98111-1247

JUL 14 2011

In re Application of	:	
MCALISTER, ROY EDWARD	:	DECISION ON PETITION
Application No. 13/027,060	:	TO MAKE SPECIAL UNDER
Filed: 02/14/2011	:	THE GREEN TECHNOLOGY
Attorney Docket No. 695458616US	:	PILOT PROGRAM

This is a decision on the petition under 37 CFR 1.102, filed June 1, 2011, to make the above-identified application special under the pilot program for applications pertaining to Green Technologies as set forth in 74 Federal Register Notice 64666 (December 8, 2009) and amended by 75 Federal Register Notice 28554 (May 21, 2010) and 75 Federal Register Notice 69049 (November 10, 2010).

The petition is **GRANTED**.

A grantable petition to make an application special under 37 CFR 1.102 and the pilot program as set forth in 74 FR 64666 must be directed to a nonprovisional application filed under 35 USC 111(a) or be a national stage entry under 35 USC 371, exclusive of any reissue applications.

In order to qualify for special status, the following requirements must be met. 1) The application must have no more than 3 independent claims and no more than 20 total claims. 2) The application must not contain any multiple dependent claims. 3) The petition must state the basis for seeking special status, i.e., the claimed invention either: A) materially enhances the quality of the environment or B) materially contributes to: i) the discovery or development of renewable energy resources, ii) the more efficient utilization and conservation of energy resources, or iii) greenhouse gas emission reduction. 4) If the disclosure is not clear on its face that the claimed invention materially contributes under category (A) or (B), the petition must be accompanied by a statement by the applicant, assignee, or an attorney/agent registered to practice before the Office explaining how the materiality standard is met. 5) A statement that applicant will agree to make an election without traverse in a telephonic interview if a restriction requirement is made by the examiner. 6) The petition to make special must be filed electronically. 7) The petition must be filed at least one day prior to the date that a first Office Action appears in the Patent Application Information Retrieval (PAIR) system. 8) The petition must be accompanied by a

request for early publication in compliance with 37 CFR 1.219 and include the publication fee as set forth in 37 CFR 1.18(d).

The requirement for a fee for consideration of the petition to make special for applications pertaining to Green Technologies has been waived.

The instant petition complies with items 1 – 8 above. Accordingly, the above-identified application has been accorded "special" status.

Telephone inquires concerning this decision should be directed to Tom Dunn at 571-272-1171.

The application is being forwarded to the Technology Center Art Unit 1621 for action on the merits commensurate with this decision.

/Tom Dunn/

Tom Dunn
Quality Assurance Specialist
Technology Center 1700

PTO/SB/20PCT-KR (06-10)
Approved for use through 01/31/2012. OMB 0651-0058
U.S. Patent and Trademark Office; U.S. DEPARTMENT OF COMMERCE
Under the Paperwork Reduction Act of 1995, no persons are required to respond to a collection of information unless it displays a valid OMB control number.

REQUEST FOR PARTICIPATION IN THE PATENT COOPERATION TREATY – PATENT PROSECUTION HIGHWAY (PCT-PPH) PILOT PROGRAM BETWEEN THE KOREAN INTELLECTUAL PROPERTY OFFICE (KIPO) AND THE USPTO

Application No.:	13/027,060-Conf. #6062	Filing Date:	February 14, 2011
First Named Inventor:	Roy E. McAlister, P.E.		
Title of the Invention:	REACTOR VESSELS WITH PRESSURE AND HEAT TRANSFER FEATURES FOR PRODUCING HYDROGEN-BASED FUELS AND STRUCTURAL ELEMENTS, AND ASSOCIATED SYSTEMS AND METHODS		

THIS REQUEST FOR PARTICIPATION IN THE PCT-PPH PILOT PROGRAM ALONG WITH THE REQUIRED DOCUMENTS MUST BE SUBMITTED VIA EFS-WEB. INFORMATION REGARDING EFS-WEB IS AVAILABLE AT HTTP://WWW.USPTO.GOV/EBC/EFS_HELP.HTML.

APPLICANT HEREBY REQUESTS PARTICIPATION IN THE PCT-PPH PROGRAM AND PETITIONS TO MAKE THE ABOVE-IDENTIFIED APPLICATION SPECIAL UNDER THE PCT-PPH PROGRAM.

The above-identified application is (1) a national stage entry of the corresponding PCT application, or (2) a national stage entry of another PCT application which claims priority to the corresponding PCT application, or (3) a national application that claims domestic/ foreign priority to the corresponding PCT application, or (4) a national application which forms the basis for the priority claim in the corresponding PCT application, or (5) a continuing application of a U.S. application that satisfies one of (1) to (4) above, or (6) a U.S. application that claims domestic benefit to a U.S. provisional application which forms the basis for the priority claim in the corresponding PCT application.

The corresponding PCT application number(s) is/are: PCT/US11/24772

The international date of the corresponding PCT application(s) is/are: February 14, 2011

I. **List of Required Documents:**

a. **A copy of the latest international work product (WO/ISA, WO/IPEA, or IPER) in the above-identified corresponding PCT application(s).**

[x] Is attached.

[ ] Is not attached because the document is already in the U.S. application.

b. **A copy of all claims which were indicated as having novelty, inventive step and industrial applicability in the above-identified corresponding PCT appliction(s).**

[x] Is attached.

[ ] Is not attached because the document is already in the U.S. application.

c. **English translations of the documents in a. and b. above are attached (if the documents are not in the English language). A statement that the English translation is accurate is attached for the document in b. above.**

Under the Paperwork Reduction Act of 1995, no persons are required to respond to a collection of information unless it displays a valid OMB control number.

REQUEST FOR PARTICIPATION IN THE PCT-PPH PILOT PROGRAM BETWEEN THE KIPO AND THE USPTO
(continued)

Application No.:	13/027,060-Conf. #6062
First Named Inventor:	Roy E. McAlister, P.E.

d. **(1) An information disclosure statement listing the documents cited in the international work products (ISR, WO/ISA, WO/IPEA, IPER) of the corresponding PCT application.**

[x] Is attached.

[ ] Has already been filed in the above-identified U.S. application on _____

(2) Copies of all documents (except) for U.S. patents or U.S. patent application publications)

[x] Are attached.

[ ] Have already been filed in the above-identified U.S. application on _____

II. Claims Correspondence Table:

Claims in US Application	Patentable Claims in the corresponding PCT Application	Explanation regarding the correspondence
1-20	1-20	The claims pending in the US application are identical to their corresponding claims in the PCT Application.

III. All the claims in the US application sufficiently correspond to the patentable claims in the corresponding PCT application.

Signature		Date	Jan. 30, 2012
Name (Print/Typed)	John M. Wechkin	Registration Number	42,216

PCT/US2011/024772

PATENT COOPERATION TREATY

69545-8616.WO00
JMW/MK

From the INTERNATIONAL SEARCHING AUTHORITY

To:

WECHKIN JOHN M.

PERKINS COIE LLP P.O. BOX 1247 SEATTLE WA 98111-1247 USA

DOCKETED
☒ Deadline
☐ Follow up
☐ Previously
☐ Abandoned
☐ Transferred
☐ Docketed

RECEIVED
PATENT DOCKETING
OCT 28 2011
PERKINS COIE LLP

12-24-11
1-24-12

PCT

NOTIFICATION OF TRANSMITTAL OF THE INTERNATIONAL SEARCH REPORT AND THE WRITTEN OPINION OF THE INTERNATIONAL SEARCHING AUTHORITY, OR THE DECLARATION

(PCT Rule 44.1)

	Date of mailing (day/month/year) 24 OCTOBER 2011 (24.10.2011)
Applicant's or agent's file reference 69545858616WO	FOR FURTHER ACTION See paragraphs 1 and 4 below
International application No. **PCT/US2011/024772**	International filing date (day/month/year) **14 FEBRUARY 2011 (14.02.2011)**
Applicant **MCALISTER, ROY EDWARD**	

1. ☒ The applicant is hereby notified that the international search report and the written opinion of the International Searching Authority have been established and are transmitted herewith.

Filing of amendments and statement under Article 19:

The applicant is entitled, if he so wishes, to amend the claims of the international application (see Rule 46):

When? The time limit for filing such amendments is normally two months from the date of transmittal of the international search report.

Where? Directly to the International Bureau of WIPO, 34 chemin des Colombettes 1211 Geneva 20, Switzerland, Facsimile No.: +41 22 338 82 70

For more detailed instructions, see *PCT Applicant's Guide*, International Phase, paragraphs 9.004 , 9.011.

2. ☐ The applicant is hereby notified that no international search report will be established and that the declaration under Article 17(2)(a) to that effect and the written opinion of the International Searching Authority are transmitted herewith.

3. ☐ **With regard to any protest** against payment of (an) additional fee(s) under Rule 40.2, the applicant is notified that:

☐ the protest together with the decision thereon has been transmitted to the International Bureau together with any request to forward the texts of both the protest and the decision thereon to the designated Offices.

☐ no decision has been made yet on the protest; the applicant will be notified as soon as a decision is made.

4. **Reminders**

The applicant may submit comments on an informal basis on the written opinion of the International Searching Authority to the International Bureau. The International Bureau will send a copy of such comments to all designated Offices unless an international preliminary examination report has been or is to be established. Following the expiration of 30 months from the priority date, these comments will also be made available to the public.

Shortly after the expiration of **18 months** from the priority date, the international application will be published by the International Bureau. If the applicant wishes to avoid or postpone publication, a notice of withdrawal of the international application, or of the priority claim, must reach the International Bureau before the completion of the technical preparations for international publication (Rules 90bis.1 and 90bis.3).

Within **19 months** from the priority date, but only in respect of some designated Offices, a demand for international preliminary examination must be filed if the applicant wishes to postpone the entry into the national phase **until 20 months** from the priority date (in some Offices even later); otherwise, the applicant must, **within 20 months** from the priority date, perform the prescribed acts for entry into the national phase before those designated Offices.

In respect of other designated Offices, the time limit of **30 months** (or later) will apply even if no demand is filed within 19months.

For details about the applicable time limits, Office by Office, see www.wipo.int/pct/en/texts/time_limits.html and the PCT Applicant's Guide, National Chapters.

Name and mailing address of the ISA/KR Korean Intellectual Property Office Government Complex-Daejeon, 189 Cheongsa-ro, Seo-gu, Daejeon 302-701, Republic of Korea Facsimile No. 82-42-472-7140	Authorized officer COMMISSIONER Telephone No. 82-42-481-8755

* Attention

Copies of the documents cited in the international search report can be searched in the following Korean Intellectual Property Office English website for three months from the date of mailing of the international search report.

http://www.kipo.go.kr/en/ => PCT Services => PCT Services

ID : PCT international application number
PW : **KJ3K72RV**

Inquiries related to PCT International Search Report or Written Opinion prepared by KIPO as an International Searching Authority can be answered not only by KIPO but also through IPKC (Intellectual Property Korea Center), located in Vienna, VA, which functions as a PCT Help Desk for PCT applicants.

Homepage: http://www.ipkcenter.com
Email: ipkc@ipkcenter.com
Phone: +1 703 388 1066
Fax: +1 703 388 1084

PATENT COOPERATION TREATY

PCT

INTERNATIONAL SEARCH REPORT

(PCT Article 18 and Rules 43 and 44)

Applicant's or agent's file reference 695458616WO	FOR FURTHER ACTION	see Form PCT/ISA/220 as well as, where applicable, item 5 below.
International application No. **PCT/US2011/024772**	International filing date *(day/month/year)* **14 FEBRUARY 2011 (14.02.2011)**	(Earliest) Priority Date *(day/month/year)* 13 FEBRUARY 2010 (13.02.2010)
Applicant **MCALISTER, ROY EDWARD**		

This International search report has been prepared by this International Searching Authority and is transmitted to the applicant according to Article 18. A copy is being transmitted to the International Bureau.

This international search report consists of a total of 3 sheets.

☐ It is also accompanied by a copy of each prior art document cited in this report.

1. **Basis of the report**
   a. With regard to the **language**, the international search was carried out on the basis of:
      ☒ the international application in the language in which it was filed
      ☐ a translation of the international application into _____, which is the language of a translation furnished for the purposes of international search (Rules 12.3(a) and 23.1(b))
   b. ☐ This international search report has been established taking into account the **rectification of an obvious mistake** authorized by or notified to this Authority under Rule 91 (Rule 43.6*bis*(a)).
   c. ☐ With regard to any **nucleotide and/or amino acid sequence** disclosed in the international application, see Box No. I.
2. ☐ **Certain claims were found unsearchable** (See Box No. II)
3. ☐ **Unity of invention is lacking** (See Box No. III)
4. With regard to the **title**,
   ☒ the text is approved as submitted by the applicant.
   ☐ the text has been established by this Authority to read as follows:
5. With regard to the **abstract**,
   ☒ the text is approved as submitted by the applicant.
   ☐ the text has been established, according to Rule 38.2, by this Authority as it appears in Box No. IV. The applicant may, within one month from the date of mailing of this international search report, submit comments to this Authority.
6. With regard to the drawings,
   a. the figure of the drawings to be published with the abstract is Figure No. 2
      ☒ as suggested by the applicant.
      ☐ as selected by this Authority, because the applicant failed to suggest a figure.
      ☐ as selected by this Authority, because this figure better characterizes the invention.
   b. ☐ none of the figure is to be published with the abstract.

INTERNATIONAL SEARCH REPORT

International application No.
PCT/US2011/024772

A. CLASSIFICATION OF SUBJECT MATTER

C01B 3/38(2006.01)i, B01J 19/24(2006.01)i, B01J 19/08(2006.01)i

According to International Patent Classification (IPC) or to both national classification and IPC

B. FIELDS SEARCHED

Minimum documentation searched (classification system followed by classification symbols)

C01B 3/38; H01M 8/04; C25B 1/04; F25D 5/00; H01M 8/10; H01L 35/00; F24J 3/02; B01J 8/00; F02C 3/30

Documentation searched other than minimum documentation to the extent that such documents are included in the fields searched

Korean utility models and applications for utility models

Japanese utility models and applications for utility models

Electronic data base consulted during the international search (name of data base and, where practicable, search terms used)

eKOMPASS(KIPO internal) & Keywords: reactor, actuator, heat exchanger, controller, hydrogen-based fuel, hydrocarbon

C. DOCUMENTS CONSIDERED TO BE RELEVANT

Category*	Citation of document, with indication, where appropriate, of the relevant passages	Relevant to claim No.
A	US 2010-0000874 A1 (BRIAN L. HINMAN et al.) 07 January 2010 See abstract; paragraphs [0030], [0037], [0052]; claims 1, 3	1-27
A	US 2006-0048808 A1 (JACK HUGH RUCKMAN et al.) 09 March 2006 See abstract; paragraphs [0057], [0062]; claims 1, 6	1-27
A	US 2009-0071166 A1 (DAVID L. HAGEN et al.) 19 March 2009 See abstract, paragraph [0172], claim 1	1-27
A	US 04158354 A (PETER O. CARDEN) 19 June 1979 See abstract; column 6, lines 46-51, 59-65; claims 1-2, 4	1-27
A	US 6585785 B1 (DAVID W. WARREN et al.) 01 July 2003 See abstract, claims 1, 4	1-27
A	US 2003-0224231 A1 (MIHAIL M. PENEV) 04 December 2003 See abstract, claims 1, 21	1-27

☐ Further documents are listed in the continuation of Box C.

☒ See patent family annex.

* Special categories of cited documents:

"A" document defining the general state of the art which is not considered to be of particular relevance

"E" earlier application or patent but published on or after the international filing date

"L" document which may throw doubts on priority claim(s) or which is cited to establish the publication date of citation or other special reason (as specified)

"O" document referring to an oral disclosure, use, exhibition or other means

"P" document published prior to the international filing date but later than the priority date claimed

"T" later document published after the international filing date or priority date and not in conflict with the application but cited to understand the principle or theory underlying the invention

"X" document of particular relevance; the claimed invention cannot be considered novel or cannot be considered to involve an inventive step when the document is taken alone

"Y" document of particular relevance; the claimed invention cannot be considered to involve an inventive step when the document is combined with one or more other such documents,such combination being obvious to a person skilled in the art

"&" document member of the same patent family

Date of the actual completion of the international search	Date of mailing of the international search report
24 OCTOBER 2011 (24.10.2011)	**24 OCTOBER 2011 (24.10.2011)**

Name and mailing address of the ISA/KR	Authorized officer
Korean Intellectual Property Office Government Complex-Daejeon, 189 Cheongsa-ro, Seo-gu, Daejeon 302-701, Republic of Korea Facsimile No. 82-42-472-7140	LEE, Young Wan Telephone No. 82-42-481-5560

INTERNATIONAL SEARCH REPORT

Information on patent family members

International application No.
PCT/US2011/024772

Patent document cited in search report	Publication date	Patent family member(s)	Publication date
US 2010-0000874 A1	07.01.2010	AU 2009-262289 A1	30.12.2009
		AU 2009-262289 A8	30.12.2009
		US 2009-0313886 A1	24.12.2009
		WO 2010-036662 A1	01.04.2010
US 2006-0048808 A1	09.03.2006	None	
US 2009-0071166 A1	19.03.2009	CA 2513982 A1	05.08.2004
		CA 2514073 A1	05.08.2004
		CN 1761588 A	19.04.2006
		CN 1764498 A	26.04.2006
		EP 1585889 A2	19.10.2005
		EP 1587613 A2	26.10.2005
		JP 2006-515912 T	08.06.2006
		JP 2006-523294 T	12.10.2006
		JP 4489756 B2	23.06.2010
		US 2004-219079 A1	04.11.2004
		US 2004-238654 A1	02.12.2004
		US 2009-180939 A1	16.07.2009
		US 7416137 B2	26.08.2008
		US 7523603 B2	28.04.2009
		WO 2004-064990 A2	05.08.2004
		WO 2004-064990 A3	29.12.2004
		WO 2004-065763 A2	05.08.2004
		WO 2004-065763 A3	28.07.2005
US 04158354 A	19.06.1979	US 04304993 A	08.12.1981
US 6585785 B1	01.07.2003	CA 2424760 A1	04.10.2004
		CA 2424760 C	11.09.2007
		WO 02-062463 A1	15.08.2002
US 2003-0224231 A1	04.12.2003	US 2005-0191535 A1	01.09.2005
		US 6881508 B2	19.04.2005
		US 7033688 B2	25.04.2006

PATENT COOPERATION TREATY

From the
INTERNATIONAL SEARCHING AUTHORITY

To:
WECHKIN JOHN M.

PERKINS COIE LLP P.O. BOX 1247 SEATTLE WA 98111-1247 USA

PCT

WRITTEN OPINION OF THE INTERNATIONAL SEARCHING AUTHORITY

(PCT Rule 43bis.1)

Date of mailing *(day/month/year)*	**24 OCTOBER 2011 (24.10.2011)**
Applicant's or agent's file reference 695458616WO	**FOR FURTHER ACTION** See paragraph 2 below

International application No.	International filing date *(day/month/year)*	Priority date *(day/month/year)*
PCT/US2011/024772	**14 FEBRUARY 2011 (14.02.2011)**	13 FEBRUARY 2010 (13.02.2010)

International Patent Classification (IPC) or both national classification and IPC

C01B 3/38(2006.01)i, B01J 19/24(2006.01)i, B01J 19/08(2006.01)i

Applicant

MCALISTER, ROY EDWARD

1. This opinion contains indications relating to the following items:

- [x] Box No. I Basis of the opinion
- [ ] Box No. II Priority
- [ ] Box No. III Non-establishment of opinion with regard to novelty, inventive step and industrial applicability
- [ ] Box No. IV Lack of unity of invention
- [x] Box No. V Reasoned statement under Rule 43bis.1(a)(i) with regard to novelty, inventive step or industrial applicability; citations and explanations supporting such statement
- [ ] Box No. VI Certain documents cited
- [ ] Box No. VII Certain defects in the international application
- [ ] Box No. VIII Certain observations on the international application

2. **FURTHER ACTION**

If a demand for international preliminary examination is made, this opinion will be considered to be a written opinion of the International Preliminary Examining Authority ("IPEA") except that this does not apply where the applicant chooses an Authority other than this one to be the IPEA and the chosen IPEA has notified the International Bureau under Rule 66.1bis(b) that written opinions of this International Searching Authority will not be so considered.

If this opinion is, as provided above, considered to be a written opinion of the IPEA, the applicant is invited to submit to the IPEA a written reply together, where appropriate, with amendments, before the expiration of 3 months from the date of mailing of Form PCT/ISA/220 or before the expiration of 22 months from the priority date, whichever expires later.
For further options, see Form PCT/ISA/220.

Name and mailing address of the ISA/KR	Date of completion of this opinion	Authorized officer
Korean Intellectual Property Office Government Complex-Daejeon, 189 Cheongsa-ro, Seo-gu, Daejeon 302-701, Republic of Korea Facsimile No. 82-42-472-7140	24 OCTOBER 2011 (24.10.2011)	LEE, Young Wan Telephone No.82-42-481-5560

WRITTEN OPINION OF THE INTERNATIONAL SEARCHING AUTHORITY	International application No. PCT/US2011/024772

Box No. I Basis of this opinion

1. With regard to the language, this opinion has been established on the basis of:

   ☒ the international application in the language in which it was filed

   ☐ a translation of the international application into _____, which is the language of a translation furnished for the purposes of international search (Rules 12.3(a) and 23.1(b))

2. ☐ This opinion has been established taking into account the **rectification of an obvious mistake** authorized by or notified to this Authority under Rule 91 (Rule 43*bis*.1(a))

3. With regard to any **nucleotide and/or amino acid sequence** disclosed in the international application, this opinion has been established on the basis of:

   a. a sequence listing filed or furnished
      ☐ on paper
      ☐ in electronic form

   b. time of filing or furnishing
      ☐ contained in the international application as filed.
      ☐ filed together with the international application in electronic form.
      ☐ furnished subsequently to this Authority for the purposes of search.

4. ☐ In addition, in the case that more than one version or copy of a sequence listing has been filed or furnished, the required statements that the information in the subsequent or additioanl copies is identical to that in the application as filed or does not go beyond the application as filed, as appropriate, were furnished.

5. Additional comments:

WRITTEN OPINION OF THE INTERNATIONAL SEARCHING AUTHORITY

International application No.
PCT/US2011/024772

Box No. V Reasoned statement under Rule 43bis.1(a)(i) with regard to novelty, inventive step or industrial applicability; citations and explanations supporting such statement

1. Statement

Novelty (N)	Claims	1-27	YES
	Claims	NONE	NO
Inventive step (IS)	Claims	1-27	YES
	Claims	NONE	NO
Industrial applicability (IA)	Claims	1-27	YES
	Claims	NONE	NO

2. Citations and explanations :

Reference is made to the following documents:

D1: US 2010-0000874 A1 (BRIAN L. HINMAN et al.) 07 January 2010
D2: US 2006-0048808 A1 (JACK HUGH RUCKMAN et al.) 09 March 2006
D3: US 2009-0071166 A1 (DAVID L. HAGEN et al.) 19 March 2009
D4: US 04158354 A (PETER O. CARDEN) 19 June 1979
D5: US 6585785 B1 (DAVID W. WARREN et al.) 01 July 2003
D6: US 2003-0224231 A1 (MIHAIL M. PENEV) 04 December 2003

1. Novelty and Inventive Step

1.1 Claims 1-6

The subject matter of claim 1 differs from that of the prior art documents in disclosing a chemical reactor system, comprising: a first reaction zone and a heat path; a reactant source; a first actuator; a second reaction zone; a mechanism coupled between the first and second reaction zones to control a flow rate between the first and second reaction zones; a second actuator; a first heat exchange; a second heat exchanger; and a controller coupled to the first and second actuators. And it is not obvious to a person skilled in the art by the documents, taken alone or in combination. Therefore, claim 1 meets the requirements of PCT Article 33(2) and (3) with respect to novelty and inventive step.

Claims 2-6 are dependent on claim 1 and therefore meet the requirements of PCT Article 33(2) and (3).

1.2 Claims 7-8

The subject matter of claim 7 differs from that of the prior art documents in disclosing a chemical reactor system, comprising: a first reactor portion having a first reactant port, a first product port, a first reaction zone and a solar radiation path; a source of methane and carbon dioxide; at least one first actuator; a second reactor portion having a second reactant port, a second product port, and a second reaction zone; a check valve; a source of hydrogen; a second actuator; a first heat exchanger; a second heat exchanger; and a controller operatively coupled to the first and second actuators. And it is not obvious to a person skilled in the art by the documents, taken alone or in combination. Therefore, claim 7 meets the requirements of PCT Article 33(2) and (3) with respect to novelty and inventive step.

Claim 8 is dependent on claim 7 and therefore meets the requirements of PCT Article 33(2) and (3).

(Continued on Supplemental Box.)

Supplemental Box

In case the space in any of the preceding boxes is not sufficient.
Continuation of:

Box V

1.3 Claims 9-20

The subject matter of claim 9 differs from that of the prior art documents in disclosing a method for processing a hydrogenous compound, comprising: directing reactants including a hydrogenous compound, to a first reaction zone; cyclically varying a pressure at the first reaction zone; directing heat into the first reaction zone; dissociating the hydrogenous compound to produce a first product; transferring the first product to a second reaction zone; cyclically varying a pressure at the second reaction zone; producing a second product including at least one of a hydrogen-based fuel and a structural building block; and transferring heat from the second product to the reactants. And it is not obvious to a person skilled in the art by the documents, taken alone or in combination. Therefore, claim 9 meets the requirements of PCT Article 33(2) and (3) with respect to novelty and inventive step.

Claims 10-20 are dependent on claim 9 and therefore meet the requirements of PCT Article 33(2) and (3).

1.4 Claims 21-27

The subject matter of claim 21 differs from that of the prior art documents in disclosing a method for processing a hydrocarbon, comprising: (a) directing methane and carbon dioxide to a first reaction zone; (b) elevating a temperature in the first reaction zone; (c) dissociating the methane to produce hydrogen and carbon monoxide; (d) directing the hydrogen and carbon monoxide to a second reaction zone; (e) transferring heat from the carbon monoxide and hydrogen to methane and carbon dioxide; (f) pressurizing the second reaction zone; (g) causing the pressure in the second reaction zone; (h) combining carbon monoxide and hydrogen to produce methanol; (i) releasing the methanol from the second reaction zone; (j) transferring heat from the methanol to methane and carbon dioxide; (k) repeating processes (d)-(k); and (l) controlling the pressure in the first and second reaction zones. And it is not obvious to a person skilled in the art by the documents, taken alone or in combination. Therefore, claim 21 meets the requirements of PCT Article 33(2) and (3) with respect to novelty and inventive step.

Claims 22-27 are dependent on claim 21 and therefore meet the requirements of PCT Article 33(2) and (3).

2. Industrial Applicability

Claims 1-27 are industrially applicable under PCT Article 33(4).

(12) INTERNATIONAL APPLICATION PUBLISHED UNDER THE PATENT COOPERATION TREATY (PCT)

(19) World Intellectual Property Organization
International Bureau

(43) International Publication Date
18 August 2011 (18.08.2011)

PCT

(10) International Publication Number
WO 2011/100696 A2

(51) International Patent Classification:
C01B 3/38 (2006.01) *B01J 19/08* (2006.01)
B01J 19/24 (2006.01)

(21) International Application Number:
PCT/US2011/024772

(22) International Filing Date:
14 February 2011 (14.02.2011)

(25) Filing Language: English

(26) Publication Language: English

(30) Priority Data:
61/304,403 13 February 2010 (13.02.2010) US

(72) Inventor; and
(71) Applicant : **MCALISTER, Roy, Edward** [US/US]; 2350 W Shangri La, Phoenix, AZ 85029 (US).

(74) Agents: **WECHKIN, John M.** et al.; Perkins Coie LLP, P.o. Box 1247, Seattle, WA 98111-1247 (US).

(81) Designated States *(unless otherwise indicated, for every kind of national protection available)*: AE, AG, AL, AM, AO, AT, AU, AZ, BA, BB, BG, BH, BR, BW, BY, BZ, CA, CH, CL, CN, CO, CR, CU, CZ, DE, DK, DM, DO, DZ, EC, EE, EG, ES, FI, GB, GD, GE, GH, GM, GT, HN, HR, HU, ID, IL, IN, IS, JP, KE, KG, KM, KN, KP, KR, KZ, LA, LC, LK, LR, LS, LT, LU, LY, MA, MD, ME, MG, MK, MN, MW, MX, MY, MZ, NA, NG, NI, NO, NZ, OM, PE, PG, PH, PL, PT, RO, RS, RU, SC, SD, SE, SG, SK, SL, SM, ST, SV, SY, TH, TJ, TM, TN, TR, TT, TZ, UA, UG, US, UZ, VC, VN, ZA, ZM, ZW.

(84) Designated States *(unless otherwise indicated, for every kind of regional protection available)*: ARIPO (BW, GH, GM, KE, LR, LS, MW, MZ, NA, SD, SL, SZ, TZ, UG, ZM, ZW), Eurasian (AM, AZ, BY, KG, KZ, MD, RU, TJ, TM), European (AL, AT, BE, BG, CH, CY, CZ, DE, DK, EE, ES, FI, FR, GB, GR, HR, HU, IE, IS, IT, LT, LU, LV, MC, MK, MT, NL, NO, PL, PT, RO, RS, SE, SI, SK, SM, TR), OAPI (BF, BJ, CF, CG, CI, CM, GA, GN, GQ, GW, ML, MR, NE, SN, TD, TG).

Published:

— *without international search report and to be republished upon receipt of that report (Rule 48.2(g))*

(54) Title: REACTOR VESSELS WITH PRESSURE AND HEAT TRANSFER FEATURES FOR PRODUCING HYDROGEN-BASED FUELS AND STRUCTURAL ELEMENTS, AND ASSOCIATED SYSTEMS AND METHODS

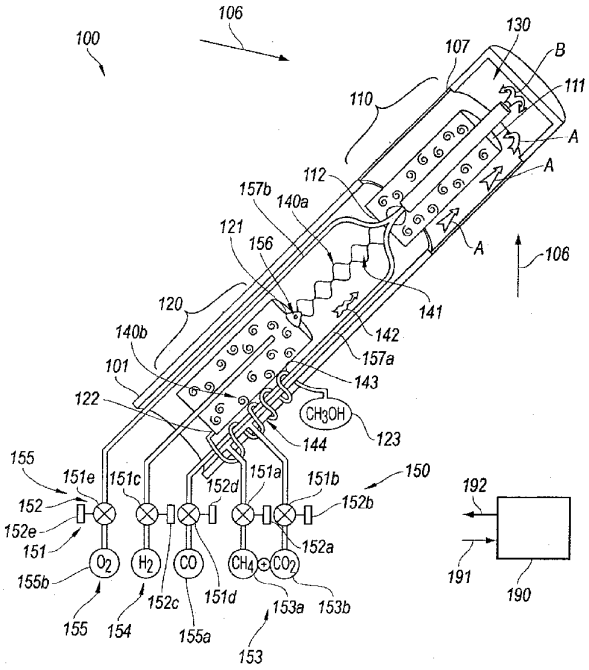

Fig. 2

(57) Abstract: Reactor vessels with pressure and heat transfer features for producing hydrogen-based fuels and structural elements, and associated systems and methods. A representative reactor system in accordance with a particular embodiment includes a first reaction zone and a heat path positioned to direct heat into the first reaction zone, a reactant source coupled to the first reaction zone, and a first actuator coupled to cyclically pressurize the first reaction zone. The system can further include a second reaction zone in fluid communication with the first, a valve coupled between the first and second reaction zones to control a flow rate therebetween, and a second actuator coupled in fluid communication with the second reaction zone to cyclically pressurize the second reaction zone. A first heat exchanger is positioned to direct heat from a first product leaving the first reaction zone to a reactant entering the first reaction zone, and a second heat exchanger is positioned to direct heat from a second product leaving the second reaction zone to the reactant entering the first reaction zone. A controller is coupled to the first and second actuators and is programmed with instructions that, when executed, control the first and second actuators in a coordinated manner based at least in part on a flow rate of the second product from the second reaction zone.

WO 2011/100696 A2

REACTOR VESSELS WITH PRESSURE AND HEAT TRANSFER FEATURES FOR PRODUCING HYDROGEN-BASED FUELS AND STRUCTURAL ELEMENTS, AND ASSOCIATED SYSTEMS AND METHODS

CROSS-REFERENCE TO RELATED APPLICATIONS

[0001] The present application claims priority to and the benefit of U.S. Patent Application No. 61/304,403, filed on February 13, 2010 and titled FULL SPECTRUM ENERGY AND RESOURCE INDEPENDENCE, which is incorporated herein by reference in its entirety. To the extent the foregoing application and/or any other materials incorporated herein by reference conflict with the disclosure presented herein, the disclosure herein controls.

TECHNICAL FIELD

[0002] The present technology relates generally to chemical reactor vessels with pressure and heat transfer features for producing hydrogen-based fuels and structural elements, and associated systems and methods. In particular embodiments, such reactor vessels can be used to produce clean-burning, hydrogen-based fuels from a wide variety of feedstocks, and can produce structural building blocks from carbon and/or other elements that are released when forming the hydrogen-based fuels.

BACKGROUND

[0003] Renewable energy sources such as solar, wind, wave, falling water, and biomass-based sources have tremendous potential as significant energy sources, but currently suffer from a variety of problems that prohibit widespread adoption. For example, using renewable energy sources in the production of electricity is dependent on the availability of the sources, which can be intermittent. Solar energy is limited by the sun's availability (i.e., daytime only), wind energy is limited by the variability of wind, falling

water energy is limited by droughts, and biomass energy is limited by seasonal variances, among other things. As a result of these and other factors, much of the energy from renewable sources, captured or not captured, tends to be wasted.

[0004] The foregoing inefficiencies associated with capturing and saving energy limit the growth of renewable energy sources into viable energy providers for many regions of the world, because they often lead to high costs of producing energy. Thus, the world continues to rely on oil and other fossil fuels as major energy sources because, at least in part, government subsidies and other programs supporting technology developments associated with fossil fuels make it deceptively convenient and seemingly inexpensive to use such fuels. At the same time, the replacement cost for the expended resources, and the costs of environment degradation, health impacts, and other by-products of fossil fuel use are not included in the purchase price of the energy resulting from these fuels.

[0005] In light of the foregoing and other drawbacks currently associated with sustainably producing renewable resources, there remains a need for improving the efficiencies and commercial viabilities of producing products and fuels with such resources.

BRIEF DESCRIPTION OF THE DRAWINGS

[0006] Figure 1 is a partially schematic, partially cross-sectional illustration of a solar-heated reactor vessel configured in accordance with an embodiment of the present technology.

[0007] Figure 2 is a partially schematic, cross-sectional illustration of a reactor having interacting endothermic and exothermic reaction zones in accordance with an embodiment of the disclosure.

[0008] Figure 3 is a flow diagram illustrating a chemical process having heat transfer characteristics and pressure variation characteristics in accordance with an embodiment of the present technology.

DETAILED DESCRIPTION

1. Overview

[0009] Several examples of devices, systems and methods for conducting interconnected exothermic and endothermic reactions in a chemical reactor are described below. The interconnections can be based on pressure differences and/or temperature differences between regions and constituents within the reactor. Such reactors can be used to produce hydrogen fuels and/or other useful end products. Accordingly, the reactors can produce clean-burning fuel and can re-purpose carbon and/or other constituents for use in durable goods, including polymers and carbon composites. Although the following description provides many specific details of the following examples in a manner sufficient to enable a person skilled in the relevant art to practice, make and use them, several of the details and advantages described below may not be necessary to practice certain examples of the technology. Additionally, the technology may include other examples that are within the scope of the claims but are not described here in detail.

[0010] References throughout this specification to "one example," "an example," "one embodiment" or "an embodiment" mean that a particular feature, structure, process or characteristic described in connection with the example is included in at least one example of the present technology. Thus, the occurrences of the phrases "in one example," "in an example," "one embodiment" or "an embodiment" in various places throughout this specification are not necessarily all referring to the same example. Furthermore, the particular features, structures, routines, steps or characteristics may be combined in any suitable manner in one or more examples of the technology. The headings provided herein are for convenience only and are not intended to limit or interpret the scope or meaning of the claimed technology.

[0011] Certain embodiments of the technology described below may take the form of computer-executable instructions, including routines executed by a programmable computer or controller. Those skilled in the relevant art will appreciate that the technology can be practiced on computer or controller systems other than those shown and described below. The technology can be embodied in a special-purpose computer, controller, or

data processor that is specifically programmed, configured or constructed to perform one or more of the computer-executable instructions described below. Accordingly, the terms "computer" and "controller" as generally used herein refer to any data processor and can include internet appliances, hand-held devices, multi-processor systems, programmable consumer electronics, network computers, mini-computers, and the like. The technology can also be practiced in distributed environments where tasks or modules are performed by remote processing devices that are linked through a communications network. Aspects of the technology described below may be stored or distributed on computer-readable media, including magnetic or optically readable or removable computer discs as well as media distributed electronically over networks. In particular embodiments, data structures and transmissions of data particular to aspects of the technology are also encompassed within the scope of the present technology. The present technology encompasses both methods of programming computer-readable media to perform particular steps, as well as executing the steps.

2. Representative Reactors and Associated Methodologies

[0012] Figure 1 is a partially schematic, partially cross-sectional illustration of a system 100 configured to conduct interactive endothermic and exothermic chemical reactions in accordance with an embodiment of the present technology. The system 100 can include a reactor vessel 101 having multiple reaction zones, shown in Figure 1 as a first reaction zone 110 and a second reaction zone 120. The system 100 includes features for providing energy to both reaction zones, for example, a suitable heat source, such as a solar concentrator 103 positioned to direct solar energy 106 into the first reaction zone 110. In this embodiment, the reactor vessel 101 and the solar concentrator 103 are mounted to a pedestal 102 that can move with multiple degrees of freedom (e.g. rotate about two orthogonal axes) to position the solar concentrator 103 to capture solar energy throughout the course of the day.

[0013] The system 100 can further include supplies of reactants and other chemical constituents, including a methane supply 153a, a carbon dioxide supply 153b, and a hydrogen supply 154. In a particular embodiment, the methane and carbon dioxide are

provided to the reactor vessel 101 to produce methanol. The methanol represents a denser and/or more versatile hydrogen carrier that has increased utility for vehicle and other fuel storage and transport purposes. The hydrogen can be stored at a hydrogen storage tank 108. As will be described in further detail below, the hydrogen can be used to pressurize the second reaction zone 120, and/or provide power to an engine 104 and generator 105. The generator 105 can provide power for the overall system 100. In other embodiments, the engine 104 and/or generator 105 can be located far away from the rest of the system 100 and can provide power to devices other than the system 100. In such cases, the hydrogen can be supplied to the engine 104 via a pipeline or other transport device. The system 100 can further include features that allow the reactions at the first and second reaction zones 110, 120 to continue in the absence of sufficient solar energy (e.g. at night). Further details are described below with reference to Figure 2. The system 100 can also include a controller 190 that receives input signals 191 from any of a variety of sensors, transducers, and/or other elements of the system 100, and, in response to information received from these elements, delivers control signals 192 to adjust operational parameters of the system 100. Further details of representative closed-loop control arrangements are also described further below with reference to Figures 2 and 3.

[0014] Figure 2 is a partially schematic, cross-sectional illustration of particular components of the system 100, including the reactor vessel 101. The reactor vessel 101 includes the first reaction zone 110 positioned toward the upper left of Figure 2 (e.g., at a first reactor portion) to receive incident solar radiation 106, e.g., through a solar transmissive surface 107. The second reaction zone 120 is also positioned within the reactor vessel 101, e.g., at a second reactor portion, to receive products from the first reaction zone 110 and to produce an end product, for example, methanol. Reactant sources 153 provide reactants to the reactor vessel 101, and a product collector 123 collects the resulting end product. A regulation system 150, which can include valves 151 or other regulators and corresponding actuators 152, is coupled to the reactant sources 153 to control the delivery of reactants to the first reaction zone 110 and to control other flows within the system 100. In other embodiments, the valves can be replaced by or supplemented with other mechanisms, e.g., pumps.

[0015] In a particular embodiment, the reactant sources 153 include a methane source 153a and a carbon dioxide source 153b. The methane source 153a is coupled to a first reactant valve 151a having a corresponding actuator 152a, and the carbon dioxide source 153b is coupled to a second reactant valve 151b having a corresponding actuator 152b. The reactants pass into the reaction vessel 101 and are conducted upwardly around the second reaction zone 120 and the first reaction zone 110 as indicated by arrows A. As the reactants travel through the reactor vessel 101, they can receive heat from the first and second reaction zones 110, 120 and from products passing from the first reaction zone 110 to the second reaction zone 120, as will be described in further detail later. The reactants enter the first reaction zone 110 at a first reactant port 111. At the first reaction zone 110, the reactants can undergo the following reaction:

$$CH_4 + CO_2 + HEAT \rightarrow 2CO + 2H_2 \quad \text{[Equation 1]}$$

[0016] In a particular embodiment, the foregoing endothermic reaction is conducted at about 900°C and at pressures of up to about 1,500 psi. In other embodiments, reactions with other reactants can be conducted at other temperatures at the first reaction zone 110. The first reaction zone 110 can include any of a variety of suitable catalysts, for example, a nickel/aluminum oxide catalyst. In particular embodiments, the reactants and/or the first reaction zone 110 can be subjected to acoustic pressure fluctuation (in addition to the overall pressure changes caused by introducing reactants, undergoing the reaction, and removing products from the first reaction zone 110) to aid in delivering the reactants to the reaction sites of the catalyst. In any of these embodiments, the products produced at the first reaction zone 110 (e.g. carbon monoxide and hydrogen) exit the first reaction zone 110 at a first product port 112 and enter a first heat exchanger 140a. The first products travel through the first heat exchanger 140a along a first flow path 141 and transfer heat to the incoming reactants traveling along a second flow path 142. Accordingly, the incoming reactants can be preheated at the first heat exchanger 140a, and by virtue of passing along or around the outside of the first reaction zone 110. In particular embodiments, one or more surfaces of the first heat exchanger 140a can include elements or materials that absorb radiation at one frequency and re-radiate it at another. Further details of suitable materials and arrangements are disclosed in co-

pending U.S. Application No. _____ titled "CHEMICAL REACTORS WITH RE-RADIATING SURFACES AND ASSOCIATED SYSTEMS AND METHODS" (Attorney Docket No. 69545.8603), filed concurrently herewith and incorporated herein by reference.

[0017] The first products enter the second reaction zone 120 via a second reactant port 121 and a check valve 156 or other flow inhibitor. The check valve 156 is configured to allow a one-way flow of the first products into the second reaction zone 120 when the pressure of the first products exceeds the pressure in the second reaction zone 120. In other embodiments, the check valve 156 can be replaced with another mechanism, e.g., a piston or pump that conveys the first products to the second reaction zone 120.

[0018] At the second reaction zone 120, the first products from the first reaction zone 110 undergo an exothermic reaction, for example:

$$2CO + 2H_2 + 2'H_2 \rightarrow CH_3OH + HEAT \qquad \text{[Equation 2]}$$

[0019] The foregoing exothermic reaction can be conducted at a temperature of approximately 250°C and in many cases at a pressure higher than that of the endothermic reaction in the first reaction zone 110. To increase the pressure at the second reaction zone 120, the system 100 can include an additional constituent source 154 (e.g. a source of hydrogen) that is provided to the second reaction zone 120 via a valve 151c and corresponding actuator 152c. The additional constituent (e.g. hydrogen, represented by $2'H_2$ in Equation 2) can pressurize the second reaction zone with or without necessarily participating as a consumable in the reaction identified in Equation 2. In particular, the additional hydrogen may be produced at pressure levels beyond 1,500 psi, e.g., up to about 5,000 psi or more, to provide the increased pressure at the second reaction zone 120. In a representative embodiment, the additional hydrogen may be provided in a separate dissociation reaction using methane or another reactant. For example, the hydrogen can be produced in a separate endothermic reaction, independent of the reactions at the first and second reaction zones 110, 120, as follows:

$$CH_4 + HEAT \rightarrow C + 2H_2 \qquad \text{[Equation 3]}$$

[0020] In addition to producing hydrogen for pressurizing the second reaction zone 120, the foregoing reaction can produce carbon suitable to serve as a building block in the

production of any of a variety of suitable end products, including polymers, self-organizing carbon-based structures such as graphene, carbon composites, and/or other materials. Further examples of suitable products are included in co-pending U.S. Application No. _____ titled "ARCHITECTURAL CONSTRUCT HAVING FOR EXAMPLE A PLURALITY OF ARCHITECTURAL CRYSTALS" (Attorney Docket No. 69545.8701US) filed concurrently herewith and incorporated herein by reference.

[0021] The reaction at the second reaction zone 120 can be facilitated with a suitable catalyst, for example, copper, zinc, aluminum and/or compounds including one or more of the foregoing elements. The product resulting from the reaction at the second reaction zone 120 (e.g. methanol) is collected at the product collector 123. Accordingly, the methanol exits the second reaction zone 120 at a second product port 122 and passes through a second heat exchanger 140b. At the second heat exchanger 140b, the methanol travels along a third flow path 143 and transfers heat to the incoming constituents provided to the first reaction zone 110 along a fourth flow path 144. Accordingly, the two heat exchangers 140a, 140b can increase the overall efficiency of the reactions taking place in the reactor vessel 101 by conserving and recycling the heat generated at the first and second reaction zones.

[0022] In a particular embodiment, energy is provided to the first reaction zone 110 via the solar concentrator 103 described above with reference to Figure 2. Accordingly, the energy provided to the first reaction zone 110 by the solar collector 103 will be intermittent. The system 100 can include a supplemental energy source that allows the reactions to continue in the absence of sufficient solar energy. In particular, the system 100 can include a supplemental heat source 155. For example, the supplemental heat source 155 can include a combustion reactant source 155a (e.g. providing carbon monoxide) and an oxidizer source 155b (e.g. providing oxygen). The flows from the reactant source 155a and oxidizer source 155b are controlled by corresponding valves 151d, 151e, and actuators 152d, 152e. In operation, the reactant and oxidizer are delivered to the reactor vessel 101 via corresponding conduits 157a, 157b. The reactant and oxidizer can be preheated within the reactor vessel 101, before reaching a combustion zone 130, as indicated by arrow B. At the combustion zone 130, the

combustion reactant and oxidizer are combusted to provide heat to the first reaction zone 110, thus supporting the endothermic reaction taking place within the first reaction zone 110 in the absence of sufficient solar energy. The result of the combustion can also yield carbon dioxide, thus reducing the need for carbon dioxide from the carbon dioxide source 153b. The controller 190 can control when the secondary heat source 155 is activated and deactivated, e.g., in response to a heat or light sensor.

[0023] In another embodiment, the oxygen provided by the oxidizer source 155b can react directly with the methane at the combustion zone 130 to produce carbon dioxide and hydrogen. This in turn can also reduce the amount of carbon dioxide required at the first reaction zone 110.

[0024] As noted above, Equation 1 represents an endothermic reaction, and Equation 2 represents an exothermic reaction. In addition, the forward progress of Equation 1 is supported by a relatively low pressure environment, while the forward progress of Equation 2 is supported by a relatively high pressure environment. The present technology includes controlling the heats and pressures produced and required in the two reaction zones in an inter-dependent manner to enhance (e.g. optimize) the production rate of methanol or other end products. Figure 3 identifies the general manner in which this is accomplished, and the details of particular embodiments are then further described. Referring now to Figures 2 and 3, an overall process 300 that can be conducted with the system 100 described above includes directing reactants, including a hydrogenous compound, to a first reaction zone 110 (process portion 301). For example, the hydrogenous compound can include the methane described above. In other embodiments, the hydrogenous compound can include other hydrocarbons, or other hydrogen-bearing compounds that do not necessarily include carbon (e.g. nitrogenous compounds). In process portion 302, the pressure at the first reaction zone 110 is cyclically varied in accordance with a first cycle. For example, the pressure in the first reaction zone 110 can be adjusted by adjusting the pressure and/or flow rate with which reactants are directed into the first reaction zone 110, and by the rate at which the resulting products leave the first reaction zone 110. Process portion 303 includes directing heat into the first reaction zone to heat the reactants. The heat added to the first

reaction zone 110 also increases the pressure in the first reaction zone 110 and accordingly represents an additional pressure control variable. Process portion 304 includes dissociating the hydrogenous compound to produce the first products in the endothermic reaction. In a representative embodiment, the endothermic reaction includes the reaction described above with reference to Equation 1, and in other embodiments, the reaction can include different products and/or reactants, while still absorbing heat.

[0025] In process portion 305, the first products are transferred to the second reaction zone 120, while transferring heat from the first products to reactants in transit to the first reaction zone 110. For example, the foregoing heat transfer process can be conducted by the first heat exchanger 140a described above with reference to Figure 2. In process portion 306, the pressure at the second reaction zone 120 is cyclically varied in accordance with a second cycle. For example, the pressure in the second reaction zone 120 can be adjusted by adjusting the flow of first products into the second reaction zone 120, and by adjusting the flow of hydrogen (or another additional constituent) from the additional constituent source 154 into the second reaction zone 120. Process portion 307 includes producing second products at the second reaction zone 120, including at least one of a hydrogen-based fuel and a structural building block, in an exothermic reaction. For example, Equation 2 above includes forming methanol at the second reaction zone 120. In other embodiments, other processes can be conducted at the second reaction zone 120 to produce other hydrogen-based fuels. In still further embodiments, the resulting products can include structural building blocks, e.g., building blocks formed from carbon, boron, nitrogen, or other elements. Representative reactants, products and processes are described in further detail in the following co-pending U.S. Applications, filed concurrently herewith and incorporated herein by reference: Application No. _____ titled "CHEMICAL PROCESSES AND REACTORS FOR EFFICIENTLY PRODUCING HYDROGEN FUELS AND STRUCTURAL MATERIALS, AND ASSOCIATED SYSTEMS AND METHODS" (Attorney Docket No. 69545.8601US); Application No. _____ titled "CARBON-BASED DURABLE GOODS AND RENEWABLE FUEL FROM BIOMASS WASTE DISSOCIATION" (Attorney Docket No. 69545.9002); and Application No. _____ titled "ARCHITECTURAL CONSTRUCT HAVING FOR EXAMPLE A PLURALITY

OF ARCHITECTURAL CRYSTALS" (Attorney Docket No. 69545.8701US). Process portion 308 includes transferring heat from the second products to the reactants in transit to the first reaction zone, e.g. via the second heat exchanger 140b described above with reference to Figure 2.

[0026] The detailed steps outlined below identify the operation of the system 100 in accordance with a further particular embodiment:

1. Provide methane and carbon dioxide to the first reaction zone 110 under pressure. In a representative embodiment, the pressure in the first reaction zone 110 cycles between about 50 psi and about 1500 psi.

2. Elevate the temperature in the first reaction zone 110, causing an endothermic reaction to proceed.

3. Produce hydrogen and carbon monoxide (first products) at the first reaction zone 110. As the hydrogen and carbon monoxide are produced, the pressure in the first reaction zone 110 increases, which slows the reaction rate. As the reaction rate slows, the first reaction zone 110 continues to heat.

4. As the pressure in the first reaction zone 110 exceeds the pressure in the second reaction zone 120, direct the hydrogen and carbon monoxide to flow to second reaction zone 120. This will reduce the pressure in the first reaction zone 110.

5. As the carbon monoxide and hydrogen pass to the second reaction zone 120, transfer heat from these constituents to the methane and carbon dioxide flowing to the first reaction zone 110.

6. As the pressure decreases in the first reaction zone 110, the endothermic reaction rate there increases, as does the rate at which the hydrogen and carbon monoxide are delivered to the second reaction zone 120. This will increase the pressure in the second reaction zone 120.

7. Further pressurize the second reaction zone 120 with a separate source of hydrogen, e.g., provided in quantities that may exceed a stoichiometric balance.

8. The pressure in the second reaction zone 120 increases to the point that hydrogen and carbon monoxide from the first reaction zone 110 no longer enter the second reaction zone 120.

9. At the second reaction zone 120, combine carbon monoxide and hydrogen to produce methanol. The rate of this exothermic reaction increases with pressure.
10. Provide occasional release of the methanol from the second reaction zone 120, thus reducing the pressure there to reactivate the reaction bed. Releasing the pressure decreases the reaction rate. The pressure at the second reaction zone 120 can generally be at a higher pressure, but can accordingly cycle between a low valve of, e.g., about 50 psi, and a high valve of, e.g., about 5,000 psi or more.
11. Transfer heat from the methanol exiting the second reaction zone 120 to the methane and carbon dioxide flowing to the first reaction zone 110.
12. As the pressure in the second reaction zone 120 falls below the pressure in the first reaction zone 110, return to step 4.
13. Control the pressures in the first and second reaction zones 110, 120 to enhance (e.g., maximize) the production of methanol.

[0027] One feature of embodiments of the systems and processes described above with reference to Figure 1-3 is that they include internally transferring heat between chemical constituents participating in the reactions. An advantage of this arrangement is that it reduces overall heat losses by recycling the heat produced and required in the exothermic and endothermic reactions, thus increasing the overall thermodynamic efficiency of the process. This in turn is expected to reduce the cost of producing high-quality, clean-burning hydrogen-based fuels and/or the building block constituents (e.g., carbon) that can be re-purposed to produce durable goods. Such goods represent an additional revenue stream that can in turn reduce the cost to produce the hydrogen-based fuel.

[0028] Another feature of at least some of the foregoing embodiments is that the pressures and flow rates of the constituents involved in the endothermic and exothermic reactions can be controlled to take advantage of reaction rates that are favored by high pressures and by low pressures. By coupling the flows of constituents in a manner that reflects the pressure differentials and temperature differentials between the reactions, the overall rate of production of the end product (e.g., methanol in a particular example) can be enhanced (e.g., optimized and/or maximized). This process can be performed

automatically or autonomously by the controller 190 described above, based on sensed values throughout the system to provide real-time control of the product production.

[0029] From the foregoing, it will appreciated that specific embodiments of the technology have been described herein for purposes of illustration, but that various modifications may be made without deviating from the technology. For example, in addition to adjusting the foregoing parameters to efficiently utilize the available solar energy, the parameters can be adjusted to account for varying rates of solar energy, and/or to maximize the life of the catalysts in the first reaction zone 110 and/or the second reaction zone 120. While embodiments were discussed above in the context of a particular hydrocarbon (e.g., methane), other hydrocarbons (e.g., gasoline, propane, butane, diesel fuel, kerosene, bunker fuel and/or others) can also be suitable. In other embodiments, the reactants can include other carbon-based hydrogen donors, or hydrogen-containing compounds that include elements other than carbon. For example, the process can include extracting nitrogen from air or another source, and combining the nitrogen with hydrogen to produce ammonia. In still further embodiments, the system can operate without cyclically varying the pressure in the first and/or second reaction zones. For example, the first reaction zone can run at a relatively low pressure and the second reaction zone can run at a relatively high pressure. In such cases, a pump, piston or other device can add work to the first products to direct them to the second reaction zone. In a further aspect of such cases, ultrasonic energy at the first and/or second reaction zones can be used to load reactants and remove products.

[0030] A variety of sources can be used to produce suitable inputs for the reactor. For example, carbohydrates and carbon dioxide produced by breweries, bakeries, power plants, coking and/or calcining operations and/or others can be supplied to the reactor. In any of these embodiments, one feature of the processes is to increase the density of the hydrogen, for example, to the point where the hydrogen can be stored in existing fuel tanks currently used for conventional fuels. Other suitable products that may be formed with carbon extracted during the foregoing processes can include diamond-like platings, e.g., for friction reduction, increased thermal conductivity and/or optical purposes,

graphene crystal formation, macroscopic fibers, scrolls and other shapes, colorants and additives for polymers, and/or doped semiconductor materials.

[0031] Certain aspects of the technology described in the context of particular embodiments may be combined or eliminated in other embodiments. For example, multiple reactors of the type shown in Figure 2 can produce different products that serve as reactants for each other. The specific details of the reactor described above in the context of Figure 2, and the steps enumerated above can be eliminated or changed in other embodiments. Further, while advantages associated with certain embodiments of the technology have been described in the context of those embodiments, other embodiments may also exhibit such advantages, and not all embodiments need necessarily exhibit such advantages to fall within the scope of the present disclosure. Accordingly, the present disclosure and associated technology can encompass other embodiments not expressly shown or described herein.

[0032] To the extent not previously incorporated herein by reference, the present application incorporates by reference in their entirety the subject matter of each of the following materials: U.S. Patent Application No. 12/857,553, filed on August 16, 2010 and titled SUSTAINABLE ECONOMIC DEVELOPMENT THROUGH INTEGRATED PRODUCTION OF RENEWABLE ENERGY, MATERIALS RESOURCES, AND NUTRIENT REGIMES; U.S. Patent Application No. 12/857,553, filed on August 16, 2010 and titled SYSTEMS AND METHODS FOR SUSTAINABLE ECONOMIC DEVELOPMENT THROUGH INTEGRATED FULL SPECTRUM PRODUCTION OF RENEWABLE ENERGY; U.S. Patent Application No. 12/857,554, filed on August 16, 2010 and titled SYSTEMS AND METHODS FOR SUSTAINABLE ECONOMIC DEVELOPMENT THROUGH INTEGRATED FULL SPECTRUM PRODUCTION OF RENEWABLE MATERIAL RESOURCES USING SOLAR THERMAL; U.S. Patent Application No. 12/857,502, filed on August 16, 2010 and titled ENERGY SYSTEM FOR DWELLING SUPPORT; Attorney Docket No. 69545-8505.US00, filed on February 14, 2011 and titled DELIVERY SYSTEMS WITH IN-LINE SELECTIVE EXTRACTION DEVICES AND ASSOCIATED METHODS OF OPERATION; U.S. Patent Application No. 61/401,699, filed on August 16, 2010 and titled COMPREHENSIVE COST MODELING OF AUTOGENOUS

SYSTEMS AND PROCESSES FOR THE PRODUCTION OF ENERGY, MATERIAL RESOURCES AND NUTRIENT REGIMES; Attorney Docket No. 69545-8601.US00, filed on February 14, 2011 and titled CHEMICAL PROCESSES AND REACTORS FOR EFFICIENTLY PRODUCING HYDROGEN FUELS AND STRUCTURAL MATERIALS, AND ASSOCIATED SYSTEMS AND METHODS; Attorney Docket No. 69545-8602.US00, filed on February 14, 2011 and titled REACTOR VESSELS WITH TRANSMISSIVE SURFACES FOR PRODUCING HYDROGEN-BASED FUELS AND STRUCTURAL ELEMENTS, AND ASSOCIATED SYSTEMS AND METHODS; Attorney Docket No. 69545-8603.US00, filed on February 14, 2011 and titled CHEMICAL REACTORS WITH RE-RADIATING SURFACES AND ASSOCIATED SYSTEMS AND METHODS; Attorney Docket No. 69545-8604.US00, filed on February 14, 2011 and titled THERMAL TRANSFER DEVICE AND ASSOCIATED SYSTEMS AND METHODS; Attorney Docket No. 69545-8605.US00, filed on February 14, 2011 and titled CHEMICAL REACTORS WITH ANNULARLY POSITIONED DELIVERY AND REMOVAL DEVICES, AND ASSOCIATED SYSTEMS AND METHODS; Attorney Docket No. 69545-8606.US00, filed on February 14, 2011 and titled REACTORS FOR CONDUCTING THERMOCHEMICAL PROCESSES WITH SOLAR HEAT INPUT, AND ASSOCIATED SYSTEMS AND METHODS; Attorney Docket No. 69545-8608.US00, filed on February 14, 2011 and titled INDUCTION FOR THERMOCHEMICAL PROCESS, AND ASSOCIATED SYSTEMS AND METHODS; Attorney Docket No. 69545-8611.US00, filed on February 14, 2011 and titled COUPLED THERMOCHEMICAL REACTORS AND ENGINES, AND ASSOCIATED SYSTEMS AND METHODS; U.S. Patent Application No. 61/385,508, filed on September 22, 2010 and titled REDUCING AND HARVESTING DRAG ENERGY ON MOBILE ENGINES USING THERMAL CHEMICAL REGENERATION; Attorney Docket No. 69545-8701.US00, filed on February 14, 2011 and titled ARCHITECTURAL CONSTRUCT HAVING FOR EXAMPLE A PLURALITY OF ARCHITECTURAL CRYSTALS; U.S. Patent Application No. 12/806,634, filed on August 16, 2010 and titled METHODS AND APPARATUSES FOR DETECTION OF PROPERTIES OF FLUID CONVEYANCE SYSTEMS; Attorney Docket No. 69545-8801.US01, filed on February 14, 2011 and titled METHODS, DEVICES, AND SYSTEMS FOR DETECTING PROPERTIES OF TARGET

SAMPLES; Attorney Docket No. 69545-9002.US00, filed on February 14, 2011 and titled SYSTEM FOR PROCESSING BIOMASS INTO HYDROCARBONS, ALCOHOL VAPORS, HYDROGEN, CARBON, ETC.; Attorney Docket No. 69545-9004.US00, filed on February 14, 2011 and titled CARBON RECYCLING AND REINVESTMENT USING THERMOCHEMICAL REGENERATION; Attorney Docket No. 69545-9006.US00, filed on February 14, 2011 and titled OXYGENATED FUEL; U.S. Patent Application No. 61/237,419, filed on August 27, 2009 and titled CARBON SEQUESTRATION; U.S. Patent Application No. 61/237,425, filed on August 27, 2009 and titled OXYGENATED FUEL PRODUCTION; Attorney Docket No. 69545-9102.US00, filed on February 14, 2011 and titled MULTI-PURPOSE RENEWABLE FUEL FOR ISOLATING CONTAMINANTS AND STORING ENERGY; U.S. Patent Application No. 61/421,189, filed on December 8, 2010 and titled LIQUID FUELS FROM HYDROGEN, OXIDES OF CARBON, AND/OR NITROGEN; AND PRODUCTION OF CARBON FOR MANUFACTURING DURABLE GOODS; and Attorney Docket No. 69545-9105.US00, filed on February 14, 2011 and titled ENGINEERED FUEL STORAGE, RESPECIATION AND TRANSPORT.

CLAIMS

I/We claim:

1. A chemical reactor system, comprising:

a first reaction zone and a heat path positioned to direct heat into the first reaction zone;

a reactant source coupled to the first reaction zone;

a first actuator coupled in fluid communication with the first reaction zone to cyclically pressurize the first reaction zone;

a second reaction zone in fluid communication with the first reaction zone;

a mechanism coupled between the first and second reaction zones to control a flow rate between the first and second reaction zones;

a second actuator coupled in fluid communication with the second reaction zone to cyclically pressurize the second reaction zone;

a first heat exchanger positioned to direct heat from a first product leaving the first reaction zone to a reactant entering the first reaction zone;

a second heat exchanger positioned to direct heat from a second product leaving the second reaction zone to the reactant entering the first reaction zone; and

a controller coupled to the first and second actuators, the controller being programmed with instructions that, when executed, control the first and second actuators in a coordinated manner based at least in part on a flow rate of the second product from the second reaction zone.

2. The system of claim 1 wherein:

the first heat exchanger is positioned in fluid communication with the first and second reaction zones and has:

a first flow path positioned to direct products from the first reaction zone into the second reaction zone; and

a second flow path in thermal communication with the first flow path and coupled between the reactant source and the first reaction zone; and wherein

the second heat exchanger is positioned in fluid communication with the second reaction zone and has:

a third flow path positioned to direct products from the second reactor; and

a fourth flow path in thermal communication with the second flow path and coupled between the reactant source and the first reaction zone.

3. The system of claim 1 wherein the controller is programmed with instructions that, when executed:

direct the first actuator to cyclically pressurize the first reaction zone; and

direct the second actuator to cyclically pressurize the first reaction zone in a manner that is correlated with pressurization of the first reaction zone.

4. The system of claim 1 wherein the heat path includes a reactor surface transmissive to solar energy, and wherein the system further comprises a solar collector positioned to direct solar radiation through the reactor surface.

5. The system of claim 4, further comprising:

a secondary heat source coupled to the first reaction zone, and wherein

the controller is coupled to the secondary heat source to actuate the secondary heat source in response to an indication of low solar input to the first reaction zone.

6. The system of claim 1 wherein the mechanism includes a check valve positioned to admit the first product into the second reaction zone when the pressure in the first reaction zone is greater than the pressure in the second reaction zone, and prevent fluid communication between the first and second reaction zones when the

pressure in the second reaction zone is greater than the pressure in the first reaction zone.

7. A chemical reactor system, comprising:

a first reactor portion having:

a first reactant port;

a first product port;

a first reaction zone in fluid communication with the first reactant port and the first product port; and

a solar radiation path positioned to direct solar radiation into the first reaction zone;

a source of methane and carbon dioxide coupled to the first reactant port;

at least one first actuator coupled in fluid communication with the first reactant port to cyclically pressurize the methane and carbon dioxide;

a second reactor portion having:

a second reactant port coupled to the first product port;

a second product port; and

a second reaction zone in fluid communication with the second reactant port and the second product port;

a check valve positioned in fluid communication with the first and second reaction zones;

a source of hydrogen coupled to the second reaction zone;

a second actuator coupled in fluid communication with the source of hydrogen to cyclically pressurize the hydrogen delivered to the second reaction zone;

a first heat exchanger positioned in fluid communication with the first product port and the second reactant port, the first heat exchanger having:

a first flow path positioned to direct products from the first reactor into the second reactor; and

a second flow path in thermal communication with the first flow path and coupled between the first reactant port and the source of methane and carbon dioxide;

a second heat exchanger positioned in fluid communication with the second product port, the second heat exchanger having:

a third flow path positioned to direct products from the second reactor;

a fourth flow path in thermal communication with the third flow path and coupled between the first reactant port and the source of methane and carbon dioxide; and

a controller operatively coupled to the first and second actuators, the controller being programmed with instructions that, when executed, activate the actuators to increase a rate of methanol production, based on an input corresponding to the rate of methanol production.

8. The method of claim 7, further comprising:

a solar concentrator positioned to direct solar radiation along the solar radiation path; and

a secondary heat source operatively coupled to the first reaction zone; and wherein the controller automatically activates the secondary heat source based at least in part on an input corresponding to a low input of solar energy to the first reaction zone.

9. A method for processing a hydrogenous compound, comprising:

directing reactants, including a hydrogenous compound, to a first reaction zone;

cyclically varying a pressure at the first reaction zone in accordance with a first cycle;

directing heat into the first reaction zone to heat the reactants;

disassociating the hydrogenous compound to produce a first product in an endothermic reaction;

transferring the first product to a second reaction zone while transferring heat from the first product to reactants in transit to the first reaction zone;

cyclically varying a pressure at the second reaction zone in accordance with a second cycle;

at the second reaction zone, producing a second product including at least one of a hydrogen-based fuel and a structural building block in an exothermic reaction; and

transferring heat from the second product to the reactants in transit to the first reaction zone.

10. The method of claim 9 wherein cyclically changing the pressure at the first reaction zone is performed in response to a rate at which the second product is produced at the second reaction zone.

11. The method of claim 9, further comprising:

at high pressure portions of the first cycle, increasing a rate at which heat is collected at the first reaction zone; and

at low pressure portions of the first cycle, increasing a rate of the endothermic reaction.

12. The method of claim 9, further comprising:

at high pressure portions of the second cycle, increasing a rate of the exothermic reaction; and

at low pressure portions of the second cycle, increasing a rate at which the dissociation products are transferred to the second reaction zone.

13. The method of claim 9 wherein directing reactants includes directing methane and carbon dioxide.

14. The method of claim 9 wherein producing first products includes producing hydrogen and carbon monoxide.

15. The method of claim 9 wherein directing heat includes directing solar radiation.

16. The method of claim 15 wherein directing solar radiation includes directing solar radiation during daylight hours and wherein directing heat includes directing heat other than solar radiation at other than daylight hours.

17. The method of claim 9 wherein cyclically varying a pressure at the second reaction zone includes directing an additional amount of a constituent present in the first products.

18. The method of claim 17 wherein directing an additional amount of the constituent includes directing an additional amount of the constituent beyond an amount sufficient to stoichiometrically balance the exothermic reaction.

19. The method of claim 9, further comprising controlling a rate of the endothermic reaction by controlling a pressure in the first reaction zone.

20. The method of claim 9, further comprising controlling the pressures in the first and second reaction zones in a coordinated manner based at least in part on a rate at which the second product is produced at the second reaction zone.

21. A method for processing a hydrocarbon, comprising:

(a) directing methane and carbon dioxide to a first reaction zone under a controlled pressure;

(b) elevating a temperature in the first reaction zone to further increase the pressure at the first reaction zone;

(c) dissociating the methane in an endothermic reaction at the first reaction zone to produce hydrogen and carbon monoxide;

(d) as the pressure in the first reaction zone exceeds a pressure in a second reaction zone, directing the hydrogen and carbon monoxide to flow to the second reaction zone, causing the pressure in the first reaction zone to decrease and the reaction rate at the first reaction zone to increase, and causing the pressure in the second reaction zone to increase;

(e) transferring heat from (1) the carbon monoxide and hydrogen passing to the second reaction zone to (2) methane and carbon dioxide flowing to the first reaction zone;

(f) further pressurizing the second reaction zone with additional hydrogen not received from the first reaction zone;

(g) causing the pressure in the second reaction zone to increase above the pressure in the first reaction zone to preclude hydrogen and carbon monoxide in the first reaction zone from entering the second reaction zone;

(h) at the second reaction zone, combining carbon monoxide and hydrogen to produce methanol in an exothermic reaction that increases in rate as a function of increasing pressure;

(i) releasing the methanol from the second reaction zone to reduce the pressure and reaction rate at the second reaction zone;

(j) transferring heat from the methanol exiting the second reaction zone to methane and carbon dioxide flowing to the first reaction zone;

(k) as the pressure in the second reaction zone falls below the pressure in the first reaction zone, repeating processes (d) – (k); and

(l) controlling the pressures in the first and second reaction zones to vary based at least in part on a rate at which methanol is released from the second reaction zone.

22. The method of claim 21, further comprising forming the additional hydrogen by dissociating hydrogen from methane in a reaction separate from the endothermic reaction in the first reaction zone.

23. The method of claim 21 wherein directing solar radiation is performed during daylight hours, and wherein the method further comprises directing heat from other than solar radiation to the first reaction zone during non-daylight hours.

24. The method of claim 23 wherein directing heat includes oxidizing carbon monoxide.

25. The method of claim 21, further comprising conducting the endothermic reaction at the first reaction zone in the presence of a nickel alumina catalyst.

26. The method of claim 21 wherein performing the endothermic reaction includes performing the endothermic reaction at a temperature of about 900°C and a pressure of up to about 1500 psi.

27. The method of claim 21 wherein performing the exothermic reaction includes performing the exothermic reaction at a temperature of about 250°C and a pressure of up to about 5000 psi.

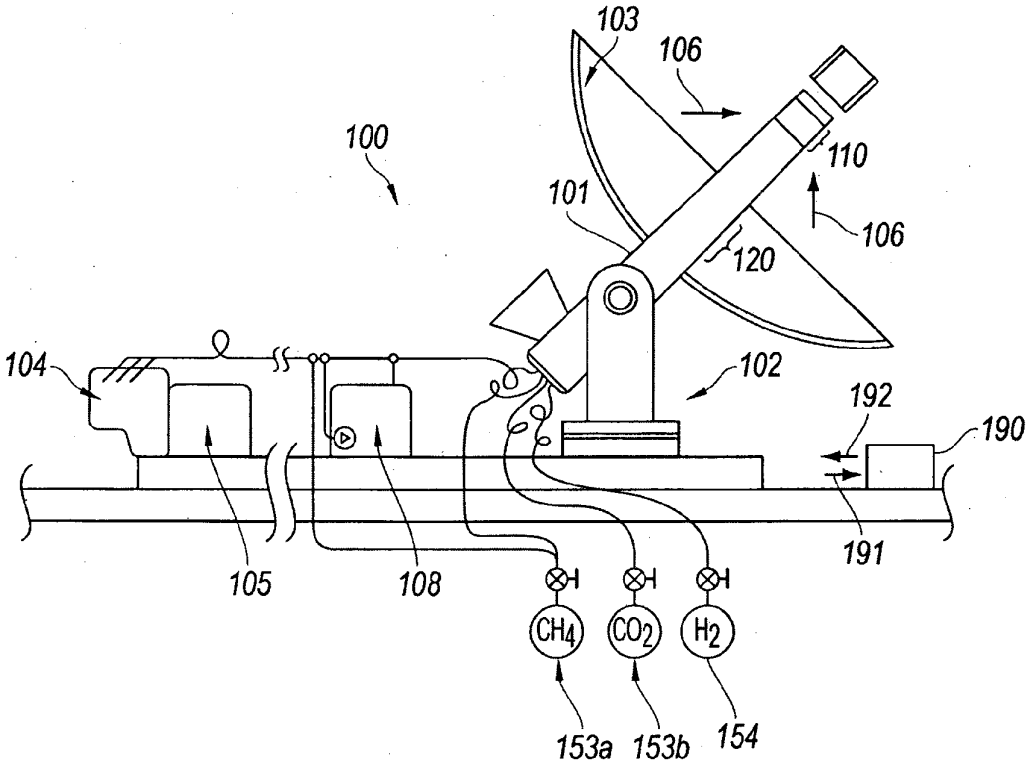
103
106
100
110
101
106
120
104
102
192
190
191
105
108
CH4
CO2
H2
153a
153b
154

Fig. 1

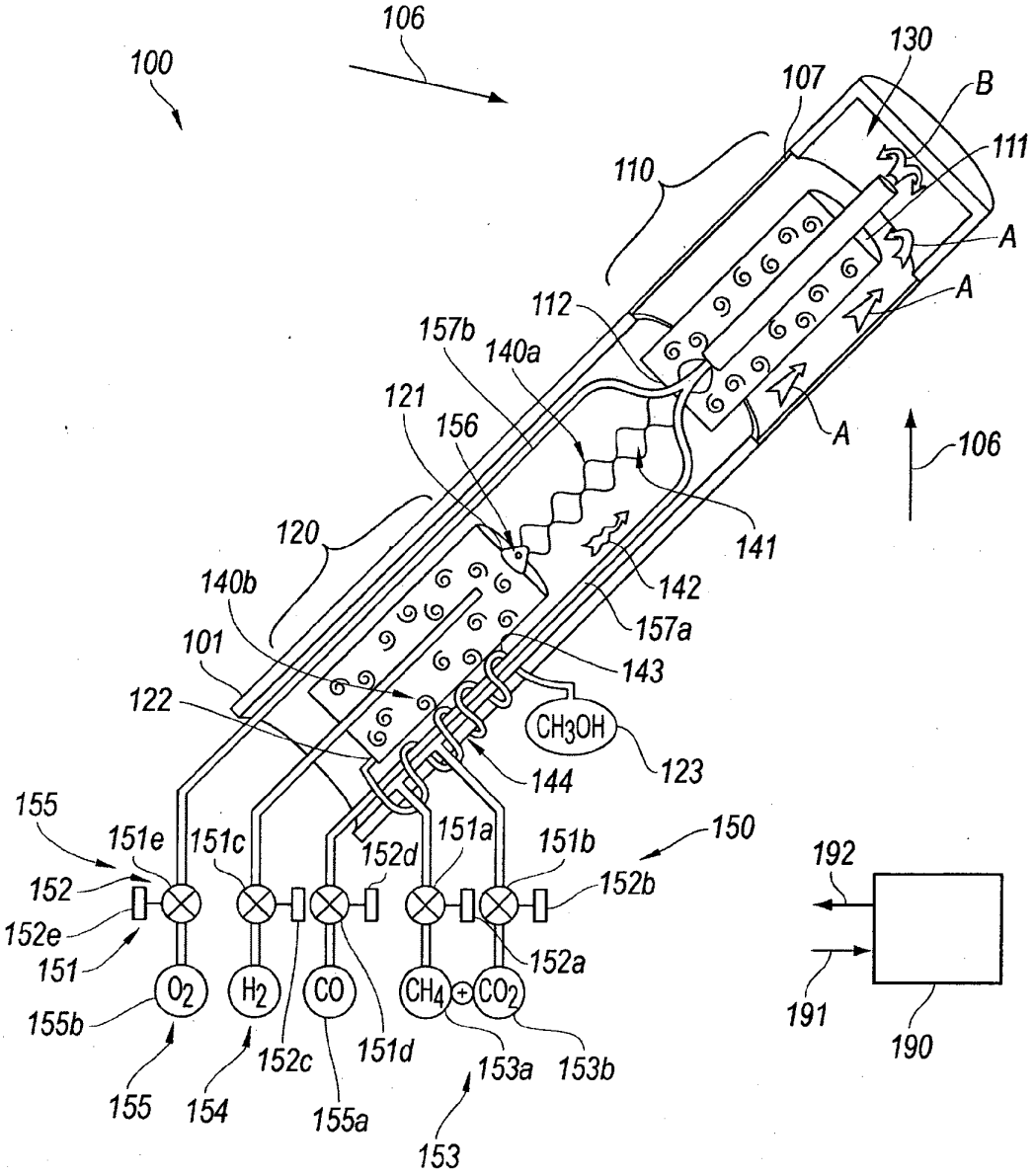
100
106
130
107
B
111
110
A
A
112
157b
140a
121
156
A
106
120
141
142
140b
157a
101
143
122
CH3OH
123
144
155
151e
151c
151a
151b
150
152d
192
152
152b
152e
151
152a
O2
H2
CO
CH4
CO2
155b
152c
151d
153a
153b
191
190
155
154
155a
153

Fig. 2

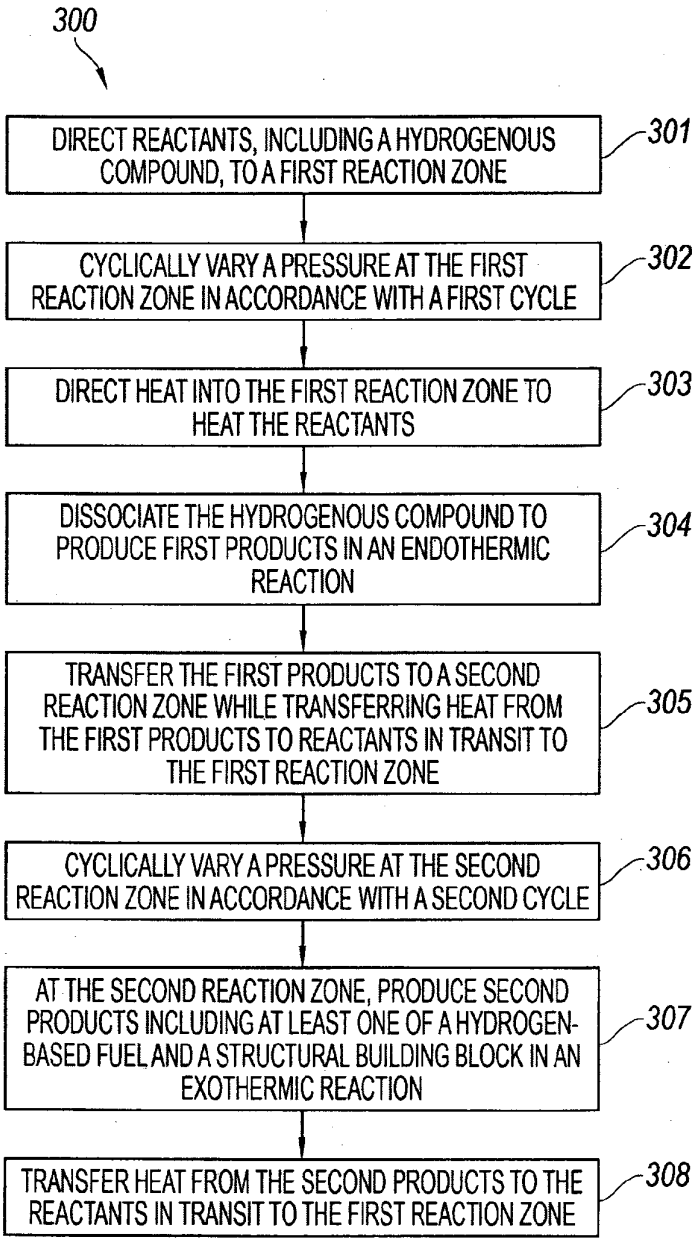
300
DIRECT REACTANTS, INCLUDING A HYDROGENOUS COMPOUND, TO A FIRST REACTION ZONE
301
CYCLICALLY VARY A PRESSURE AT THE FIRST REACTION ZONE IN ACCORDANCE WITH A FIRST CYCLE
302
DIRECT HEAT INTO THE FIRST REACTION ZONE TO HEAT THE REACTANTS
303
DISSOCIATE THE HYDROGENOUS COMPOUND TO PRODUCE FIRST PRODUCTS IN AN ENDOTHERMIC REACTION
304
TRANSFER THE FIRST PRODUCTS TO A SECOND REACTION ZONE WHILE TRANSFERRING HEAT FROM THE FIRST PRODUCTS TO REACTANTS IN TRANSIT TO THE FIRST REACTION ZONE
305
CYCLICALLY VARY A PRESSURE AT THE SECOND REACTION ZONE IN ACCORDANCE WITH A SECOND CYCLE
306
AT THE SECOND REACTION ZONE, PRODUCE SECOND PRODUCTS INCLUDING AT LEAST ONE OF A HYDROGEN-BASED FUEL AND A STRUCTURAL BUILDING BLOCK IN AN EXOTHERMIC REACTION
307
TRANSFER HEAT FROM THE SECOND PRODUCTS TO THE REACTANTS IN TRANSIT TO THE FIRST REACTION ZONE
308

Fig. 3

UNITED STATES PATENT AND TRADEMARK OFFICE

Commissioner for Patents
United States Patent and Trademark Office
P.O. Box 1450
Alexandria, VA 22313-1450
www.uspto.gov

PERKINS COIE LLP
PATENT-SEA
P.O. BOX 1247
SEATTLE, WA 98111-1247

MAILED
MAR 30 2012
OFFICE OF PETITIONS

In re Application of Roy Edward McAlister Application No.: 13/027,060 Filed: 14 February 2011 Attorney Docket No.: 695458616US For: REACTOR VESSELS WITH PRESSURE AND HEAT TRANSFER FEATURES FOR PRODUCING HYDROGEN-BASED FUELS AND STRUCTURAL ELEMENTS, AND ASSOCIATED SYSTEMS AND METHODS	: DECISION ON REQUEST TO PARTICIPATE IN THE PATENT PROSECUTION HIGHWAY PROGRAM AND PETITION TO MAKE SPECIAL UNDER 37 CFR 1.102(a)

This is a decision in response to the request to participate in the PCT Patent Prosecution Highway (PCT-PPH) pilot program and the petition under 37 CFR 1.102(a), filed on 30 January 2012, to make the above-identified application special.

A review of the record discloses that "special status" under the pilot program for applications pertaining to Green Technologies was granted in a decision mailed July 14, 2011.

Since no further benefit can be gain by acceptance of a petition and request to participate in the PPH program, the request and petition are **DISMISSED AS MOOT**.

Inquiries concerning this decision should be directed to the undersigned at 571-272-3204.

All other inquiries concerning the examination or status of the application is accessible in the PAIR system at http://www.uspto.gov/ebc.index.html.

This application is being returned to Technology Center AU 1774 for appropriate action by the examiner.

/SDB/

Sherry D. Brinkley
Petitions Examiner
Office of Petitions

Doc Code: PET.GREEN
Document Description: Petition for Green Tech Pilot

PTO/SB/420 (11-10)
Approved for use through 01/31/2011. OMB 0651-0062
U.S. Patent and Trademark Office; U.S. DEPARTMENT OF COMMERCE
Under the Paperwork Reduction Act of 1995, no persons are required to respond to a collection of information unless it displays a valid OMB control number.

PETITION TO MAKE SPECIAL UNDER THE GREEN TECHNOLOGY PILOT PROGRAM

Attorney Docket Number:	695459002US	Application Number (if known): 13/027,068- Conf. #6078	Filing date: February 14, 2011
First Named Inventor:	Roy E. McAlister, P.E.		
Title:	CARBON-BASED DURABLE GOODS AND RENEWABLE FUEL FROM BIOMASS WASTE DISSOCIATION		

APPLICANT HEREBY REQUESTS TO PARTICIPATE IN THE GREEN TECHNOLOGY PILOT PROGRAM FOR THE ABOVE-IDENTIFIED APPLICATION. See Instruction Sheet on page 2.

This petition must be timely filed electronically using the USPTO electronic filing system, EFS-Web.

1. By filing this petition:

   <u>Applicant is requesting early publication</u>: Applicant hereby requests early publication under 37 CFR 1.219 and the publication fee set forth in 37 CFR 1.18(d) accompanies this request.

2. By filing this petition: applicant is agreeing to make an election without traverse in a telephonic interview and elect an invention that meets the eligibility requirements for the Green Technology Pilot Program, if the Office determines that the claims are not obviously directed to a single invention. See Instruction Sheet.

3. This request is accompanied by statements of special status for the eligibility requirement.

4. The application contains no more than three (3) independent claims and twenty (20) total claims.

5. The application does not contain any multiple dependent claims.

6. Other attachments: Statement in Support of Petition

Signature	Date 5.16.11
Name (Print/Typed) Susan D. Betcher	Registration Number 43,498

Note: Signatures of all the inventors or assignees of record of the entire interest or their representative(s) are required in accordance with 37 CFR 1.33 and 11.18. Please see 37 CFR 1.4(d) for the form of the signature. If necessary, submit multiple forms if more than one signature, see below.*

☐ *Total of 1 forms are submitted.

Docket No.: 695459002US
(PATENT)

IN THE UNITED STATES PATENT AND TRADEMARK OFFICE

In re Patent Application of:
Roy E. McAlister, P.E.

Application No.: 13/027,068

Confirmation No.: 6078

Filed: February 14, 2011

Art Unit: 1723

For: CARBON-BASED DURABLE GOODS AND RENEWABLE FUEL FROM BIOMASS WASTE DISSOCIATION

Examiner: Not Yet Assigned

STATEMENT IN SUPPORT OF PETITION TO MAKE SPECIAL

MS Missing Parts
Commissioner for Patents
P.O. Box 1450
Alexandria, VA 22313-1450

Sir:

This paper is filed in support of the Petition to Make Special under the Green Technology Pilot Program filed concurrently herewith.

Petitioner hereby states that the referenced application is directed to a single invention that materially enhances the quality of the environment, or that materially contributes to: (1) the discovery or development of renewable energy resources; (2) the more efficient utilization and conservation of energy resources; or (3) green house gas emission reduction.

More specifically, the claims and specification are directed to carbon-based durable goods and renewal fuels from biomass waste dissociation providing renewable energy resources.

In light of the above, it is requested that the Petition to Make Special under the Green Technology Pilot Program be granted.

Applicant believes no fee is due with this response. However, if a fee is due, please charge our Deposit Account No. 50-0665, under Order No. 695459002US from which the undersigned is authorized to draw.

Dated: 6.16.11

Respectfully submitted,

By

Susan D. Betcher
Registration No.: 43,498
PERKINS COIE LLP
P.O. Box 1247
Seattle, Washington 98111-1247
(206) 359-8000
(206) 359-7198 (Fax)
Attorney for Applicant

UNITED STATES PATENT AND TRADEMARK OFFICE

UNITED STATES DEPARTMENT OF COMMERCE
United States Patent and Trademark Office
Address: COMMISSIONER FOR PATENTS
P.O. Box 1450
Alexandria, Virginia 22313-1450
www.uspto.gov

APPLICATION NO.	FILING DATE	FIRST NAMED INVENTOR	ATTORNEY DOCKET NO.	CONFIRMATION NO.
13/027,068	02/14/2011	Roy Edward McAlister	695459002US	6078

25096 7590 05/31/2011
PERKINS COIE LLP
PATENT-SEA
P.O. BOX 1247
SEATTLE, WA 98111-1247

EXAMINER

ART UNIT	PAPER NUMBER
1723	

NOTIFICATION DATE	DELIVERY MODE
05/31/2011	ELECTRONIC

Please find below and/or attached an Office communication concerning this application or proceeding.

The time period for reply, if any, is set in the attached communication.

Notice of the Office communication was sent electronically on above-indicated "Notification Date" to the following e-mail address(es):

patentprocurement@perkinscoie.com

UNITED STATES PATENT AND TRADEMARK OFFICE

Commissioner for Patents
United States Patent and Trademark Office
P.O. Box 1450
Alexandria, VA 22313-1450
www.uspto.gov

PERKINS COIE LLP
PATENT-SEA
P.O. BOX 1247
SEATTLE WA 98111-1247

MAY 31 2011

In re Application of	:	
Roy Edward McAlister	:	DECISION ON PETITION
Application No. 13/027,068	:	TO MAKE SPECIAL UNDER
Filed: February 14, 2011	:	THE GREEN TECHNOLOGY
Attorney Docket No. 695459002US	:	PILOT PROGRAM

This is a decision on the petition under 37 CFR 1.102, filed May 16, 2011, to make the above-identified application special under the pilot program for applications pertaining to Green Technologies as set forth in 74 Federal Register Notice 64666 (December 8, 2009) and amended by 75 Federal Register Notice 28554 (May 21, 2010) and 75 Federal Register Notice 69049 (November 10, 2010).

The petition is **GRANTED**.

A grantable petition to make an application special under 37 CFR 1.102 and the pilot program as set forth in 74 FR 64666 must be directed to a nonprovisional application filed under 35 USC 111(a) or be a national stage entry under 35 USC 371, exclusive of any reissue applications.

In order to qualify for special status, the following requirements must be met. 1) The application must have no more than 3 independent claims and no more than 20 total claims. 2) The application must not contain any multiple dependent claims. 3) The petition must state the basis for seeking special status, i.e., the claimed invention either: A) materially enhances the quality of the environment or B) materially contributes to: i) the discovery or development of renewable energy resources, ii) the more efficient utilization and conservation of energy resources, or iii) greenhouse gas emission reduction. 4) If the disclosure is not clear on its face that the claimed invention materially contributes under category (A) or (B), the petition must be accompanied by a statement by the applicant, assignee, or an attorney/agent registered to practice before the Office explaining how the materiality standard is met. 5) A statement that applicant will agree to make an election without traverse in a telephonic interview if a restriction requirement is made by the examiner. 6) The petition to make special must be filed electronically. 7) The petition must be filed at least one day prior to the date that a first Office Action appears in the Patent Application Information Retrieval (PAIR) system. 8) The petition must be accompanied by a request for early publication in compliance with 37 CFR 1.219 and include the publication fee as set forth in 37 CFR 1.18(d).

The requirement for a fee for consideration of the petition to make special for applications pertaining to Green Technologies has been waived.

The instant petition complies with items 1 – 8 above. Accordingly, the above-identified application has been accorded "special" status.

Telephone inquires concerning this decision should be directed to Blaine Copenheaver at 571-272-1156.

The application is being forwarded to the examiner for action on the merits commensurate with this decision.

/Blaine Copenheaver/

Blaine Copenheaver
Quality Assurance Specialist
Technology Center 1700

UNITED STATES PATENT AND TRADEMARK OFFICE

Commissioner for Patents
United States Patent and Trademark Office
P.O. Box 1450
Alexandria, VA 22313-1450
www.uspto.gov

PERKINS COIE LLP
P.O. BOX 1208
SEATTLE WA 98111-1208

MAILED
JUN 16 2011
OFFICE OF PETITIONS

In re Application of
Liang, et al.
Application No. 13/027,100
Filed/Deposited: 14 February, 2011
Attorney Docket No. 76614-8002.US19

DECISION ON PETITION

This is a decision on the petition filed on 25 May, 2011, pursuant to 37 C.F.R. §1.47.

NOTE:

Petitioner has placed much of the statement responsibility in this matter in the hands of Y Ping Chow, averred assoc. vice president, and Amy Chao, averred intellectual property administrator for the assignee—neither of whom appears to be registered to practice before the Office—thus it is impossible to determine their respective appreciations of their burdens before the Office.

Accordingly, Petitioner is reminded of her burden as one registered to practice before the Office that she **must** inquire into the underlying facts of representations made to the Office and support averments with the appropriate documentation–since all owe to the Office the continuing duty to disclose.[1]

The petition as considered pursuant to 37 C.F.R. §1.47(a) is **GRANTED**.

A grantable petition pursuant to 37 C.F.R. §1.47(a) requires: (1) petition and fee; (2) proof that the non-signing inventor cannot be reached or refuses to sign the oath or declaration after having been presented with the application papers (specification: description, claims and drawings); (3) an acceptable oath or declaration in compliance with 35 U.S.C. §§ 115 and 116; and (4) a statement of the last known address of the non-signing inventor(s)—with diligence in the effort

[1] See supplement of 17 June, 1999. The Patent and Trademark Office is relying on petitioner's duty of candor and good faith and accepting a statement made by Petitioner. See Changes to Patent Practice and Procedure, 62 Fed. Reg. at 53160 and 53178, 1203 Off. Gaz. Pat. Office at 88 and 103 (responses to comments 64 and 109)(applicant obligated under 37 C.F.R. §11.18, formerly §10.18 to inquire into the underlying facts and circumstances when providing statements to the Patent and Trademark Office).

to ascertain the validity of the address set forth as the reasonably believed to be last known/current/valid address.

Petitioners always are reminded that for transmission by Email of any document to be accepted by the Office, written acknowledgment of receipt and readability of the message and all applicable attachments of required materials must be provided.

BACKGROUND

The record reflects as follows:

The application was deposited on 14 February, 2011, without, *inter alia*, a fully executed oath/declaration

On 25 February, 2011, the Office mailed a Notice of Missing Parts requiring, *inter alia*, a fully executed oath/declaration.

On 25 May, 2011, Petitioner Viola T. Kung (Reg. No. 41,131) filed, *inter alia*, a request and fee for extension of time, a petition pursuant to the regulations at 37 C.F.R. §1.47, with an oath/declaration executed by co-inventors Chen-Park, Zang and Wang for themselves and on behalf of non-signing co-inventors Rong-Chang Liang (Mr. Liang), Scott C-J Tseng (Mr. Tseng) and Zang-Arh George Wu (Mr. Wu), with a statement by Amy Chao (Ms. Chao) and Y. Pinch Chow (Mr. Chow) attesting to the evidences of the efforts to ensure that the entire application—description, claims, abstract and drawing—was transmitted to valid/current/reasonably believed to be last known addresses for the non-signing inventors with their refusal/failure to sign/join in the application or to be found. (Liang: refusal to sign; Wu: failure/refusal to accept delivery; Tseng: refusal to sign.)

Therefore, it appears that Petitioner provided a showing satisfying the requirements under the Rule to wit: showing/proof that the non-signing inventor actually and/or constructively refused to sign the oath or declaration after having been presented with the application papers (specification: description, claims and drawings); an acceptable oath or declaration in compliance with 35 U.S.C. §§ 115 and 116; and a statement of the last known address of the non-signing inventor(s)—with diligence in the effort to ascertain the validity of the address set forth as the reasonably believed to be last known/current/valid address. Thus, Petitioner sought to satisfy the requirements pursuant to the Rule and the guidance in the Commentary at MPEP §409.03, and §409.03(a) et seq.), and provide a showing that the non-signing inventor could not be found/refused to sign after diligent effort.

The availability of applications and application papers online to applicants/practitioners who diligently associate their Customer Number with the respective application(s) now provides an applicant/practitioner on-demand information as to events/transactions in an application.

Out of an abundance of caution, Petitioners always are reminded that those registered to practice and all others who make representations before the Office **must** inquire into the underlying facts of representations made to the Office and support averments with the appropriate documentation–since all owe to the Office the continuing duty to disclose.[2]

CONCLUSION

The instant petition under 37 C.F.R. §1.47(a) is **granted** (status is accorded pursuant to 37 C.F.R. §1.47(a).)

As provided in 37 C.F.R. §1.47(c), this Office will forward notice of this application's filing to the non-signing inventors at the addresses given in the petition. Notice of the filing of this application will also be published in the Official Gazette.

The instant application is released to the Office of Patent Application Processing (OPAP) for such processing as required in due course.

Telephone inquiries regarding this decision may be directed to the undersigned at (571) 272-3214—it is noted, however, that all practice before the Office is in writing (see: 37 C.F.R. §1.2[3]) and the proper authority for action on any matter in this regard are the statutes (35 U.S.C.), regulations (37 C.F.R.) and the commentary on policy (MPEP). Therefore, no telephone discussion may be controlling or considered authority for Petitioner's action(s).

/John J. Gillon, Jr./
John J. Gillon, Jr.
Senior Attorney
Office of Petitions

---

[2] See supplement of 17 June, 1999. The Patent and Trademark Office is relying on petitioner's duty of candor and good faith and accepting a statement made by Petitioner. See Changes to Patent Practice and Procedure, 62 Fed. Reg. at 53160 and 53178, 1203 Off. Gaz. Pat. Office at 88 and 103 (responses to comments 64 and 109)(applicant obligated under 37 C.F.R. §11.18, formerly §10.18 to inquire into the underlying facts and circumstances when providing statements to the Patent and Trademark Office).

[3] The regulations at 37 C.F.R. §1.2 provide:

§1.2 Business to be transacted in writing.
All business with the Patent and Trademark Office should be transacted in writing. The personal attendance of applicants or their attorneys or agents at the Patent and Trademark Office is unnecessary. The action of the Patent and Trademark Office will be based exclusively on the written record in the Office. No attention will be paid to any alleged oral promise, stipulation, or understanding in relation to which there is disagreement or doubt

UNITED STATES PATENT AND TRADEMARK OFFICE

Commissioner for Patents
United States Patent and Trademark Office
P.O. Box 1450
Alexandria, VA 22313-1450
www.uspto.gov

RONG-CHANG LIANG
875 BRENT DRIVE
CUPERTINO, CA 95014

MAILED

JUN 16 2011

OFFICE OF PETITIONS

In re Application of
Liang, et al.
Application No. 13/027,100
Filed/Deposited: 14 February, 2011
Attorney Docket No. 76614-8002.US19

COMMUNICATION

Dear Rong-Chang Liang:

You are named as an inventor in the above-identified United States patent application, filed under the provisions of 35 U.S.C. §116 (United States Code), and 37 C.F.R. §1.47 (Code of Federal Regulations), Rules of Practice in Patent Cases. Should a patent be granted on the application you will be designated therein as an inventor.

As a named inventor you are entitled to inspect any paper in the file wrapper of the application, order copies of all or any part thereof (at a prepaid cost per 37 C.F.R. §1.19) or make your position of record in the application. Alternatively, you may arrange to do any of the preceding through a registered patent attorney or agent presenting written authorization from you. If you care to join the application, counsel of record (see below) would presumably assist you. Joining the application would entail the filing of an appropriate oath or declaration by you pursuant to 37 C.F.R. §1.63.

Should you elect to join in the application, the contact information for Counsel of Record is set forth at the end of this Communication.

Should you seek to identify independent Counsel, you may find the Patent Attorneys/Agents Search engine of assistance (https://oedci.uspto.gov/OEDCI/).

Requests for information regarding your application should be directed to the File Information Unit at (703) 308-2733. Information regarding how to pay for and order a copy of the application, or a specific paper in the application, should be directed to the Certification Division at (571) 272-3150 or 1 (800) 972-6382 (outside the Washington, DC area).

Telephone inquiries regarding this communication may be directed to the undersigned at (571) 272-3214—it is noted, however, that all practice before the Office is in writing (see: 37 C.F.R. §1.2[1]) and the proper authority for action on any matter in this regard are the statutes (35 U.S.C.), regulations (37 C.F.R.) and the commentary on policy (MPEP). Therefore, no telephone discussion may be controlling or considered authority for Petitioner's/your action(s) and/or inactions. Moreover, the Office can neither advise you nor recommend Counsel in this matter.

/John J. Gillon, Jr./
John J. Gillon, Jr.
Senior Attorney
Office of Petitions

Counsel of Record:
PERKINS COIE LLP
P.O. BOX 1208
SEATTLE WA 98111-1208

[1] The regulations at 37 C.F.R. §1.2 provide:
§1.2 Business to be transacted in writing.
All business with the Patent and Trademark Office should be transacted in writing. The personal attendance of applicants or their attorneys or agents at the Patent and Trademark Office is unnecessary. The action of the Patent and Trademark Office will be based exclusively on the written record in the Office. No attention will be paid to any alleged oral promise, stipulation, or understanding in relation to which there is disagreement or doubt

UNITED STATES PATENT AND TRADEMARK OFFICE

Commissioner for Patents
United States Patent and Trademark Office
P.O. Box 1450
Alexandria, VA 22313-1450
www.uspto.gov

MAILED

JUN 16 2011

OFFICE OF PETITIONS

SCOTT C-J TSENG
41554 HIGGINS WAYS
FREMONT, CA 94539

In re Application of	:	
Liang, et al.	:	COMMUNICATION
Application No. 13/027,100	:	
Filed/Deposited: 14 February, 2011	:	
Attorney Docket No. 76614-8002.US19	:	

Dear Scott C-J Tseng:

You are named as an inventor in the above-identified United States patent application, filed under the provisions of 35 U.S.C. §116 (United States Code), and 37 C.F.R. §1.47 (Code of Federal Regulations), Rules of Practice in Patent Cases. Should a patent be granted on the application you will be designated therein as an inventor.

As a named inventor you are entitled to inspect any paper in the file wrapper of the application, order copies of all or any part thereof (at a prepaid cost per 37 C.F.R. §1.19) or make your position of record in the application. Alternatively, you may arrange to do any of the preceding through a registered patent attorney or agent presenting written authorization from you. If you care to join the application, counsel of record (see below) would presumably assist you. Joining the application would entail the filing of an appropriate oath or declaration by you pursuant to 37 C.F.R. §1.63.

Should you elect to join in the application, the contact information for Counsel of Record is set forth at the end of this Communication.

Should you seek to identify independent Counsel, you may find the Patent Attorneys/Agents Search engine of assistance (https://oedci.uspto.gov/OEDCI/).

Requests for information regarding your application should be directed to the File Information Unit at (703) 308-2733. Information regarding how to pay for and order a copy of the application, or a specific paper in the application, should be directed to the Certification Division at (571) 272-3150 or 1 (800) 972-6382 (outside the Washington, DC area).

Telephone inquiries regarding this communication may be directed to the undersigned at (571) 272-3214—it is noted, however, that all practice before the Office is in writing (see: 37 C.F.R. §1.2[1]) and the proper authority for action on any matter in this regard are the statutes (35 U.S.C.), regulations (37 C.F.R.) and the commentary on policy (MPEP). Therefore, no telephone discussion may be controlling or considered authority for Petitioner's/your action(s) and/or inactions. Moreover, the Office can neither advise you nor recommend Counsel in this matter.

/John J. Gillon, Jr./
John J. Gillon, Jr.
Senior Attorney
Office of Petitions

Counsel of Record:
PERKINS COIE LLP
P.O. BOX 1208
SEATTLE WA 98111-1208

[1] The regulations at 37 C.F.R. §1.2 provide:
§1.2 Business to be transacted in writing.
All business with the Patent and Trademark Office should be transacted in writing. The personal attendance of applicants or their attorneys or agents at the Patent and Trademark Office is unnecessary. The action of the Patent and Trademark Office will be based exclusively on the written record in the Office. No attention will be paid to any alleged oral promise, stipulation, or understanding in relation to which there is disagreement or doubt

UNITED STATES PATENT AND TRADEMARK OFFICE

Commissioner for Patents
United States Patent and Trademark Office
P.O. Box 1450
Alexandria, VA 22313-1450
www.uspto.gov

ZARNG-ARH GEORGE WU
7966 AVENIDA NAVIDAD/APT. 88
SAN DIEGO, CA 92122

MAILED

JUN 16 2011

OFFICE OF PETITIONS

In re Application of
Liang, et al.
Application No. 13/027,100
Filed/Deposited: 14 February, 2011
Attorney Docket No. 76614-8002.US19

COMMUNICATION

Dear Zarng-Arh George Wu:

You are named as an inventor in the above-identified United States patent application, filed under the provisions of 35 U.S.C. §116 (United States Code), and 37 C.F.R. §1.47 (Code of Federal Regulations), Rules of Practice in Patent Cases. Should a patent be granted on the application you will be designated therein as an inventor.

As a named inventor you are entitled to inspect any paper in the file wrapper of the application, order copies of all or any part thereof (at a prepaid cost per 37 C.F.R. §1.19) or make your position of record in the application. Alternatively, you may arrange to do any of the preceding through a registered patent attorney or agent presenting written authorization from you. If you care to join the application, counsel of record (see below) would presumably assist you. Joining the application would entail the filing of an appropriate oath or declaration by you pursuant to 37 C.F.R. §1.63.

Should you elect to join in the application, the contact information for Counsel of Record is set forth at the end of this Communication.

Should you seek to identify independent Counsel, you may find the Patent Attorneys/Agents Search engine of assistance (https://oedci.uspto.gov/OEDCI/).

Requests for information regarding your application should be directed to the File Information Unit at (703) 308-2733. Information regarding how to pay for and order a copy of the application, or a specific paper in the application, should be directed to the Certification Division at (571) 272-3150 or 1 (800) 972-6382 (outside the Washington, DC area).

Telephone inquiries regarding this communication may be directed to the undersigned at (571) 272-3214—it is noted, however, that all practice before the Office is in writing (see: 37 C.F.R. §1.2[1]) and the proper authority for action on any matter in this regard are the statutes (35 U.S.C.), regulations (37 C.F.R.) and the commentary on policy (MPEP). Therefore, no telephone discussion may be controlling or considered authority for Petitioner's/your action(s) and/or inactions. Moreover, the Office can neither advise you nor recommend Counsel in this matter.

/John J. Gillon, Jr./
John J. Gillon, Jr.
Senior Attorney
Office of Petitions

Counsel of Record:
PERKINS COIE LLP
P.O. BOX 1208
SEATTLE WA 98111-1208

[1] The regulations at 37 C.F.R. §1.2 provide:
§1.2 Business to be transacted in writing.
All business with the Patent and Trademark Office should be transacted in writing. The personal attendance of applicants or their attorneys or agents at the Patent and Trademark Office is unnecessary. The action of the Patent and Trademark Office will be based exclusively on the written record in the Office. No attention will be paid to any alleged oral promise, stipulation, or understanding in relation to which there is disagreement or doubt

Doc Code: PET.GREEN
Document Description: Petition for Green Tech Pilot

PTO/SB/420 (11-10)
Approved for use through 01/31/2011. OMB 0651-0062
U.S. Patent and Trademark Office; U. S. DEPARTMENT OF COMMERCE
Under the Paperwork Reduction Act of 1995, no persons are required to respond to a collection of information unless it displays a valid OMB control number.

PETITION TO MAKE SPECIAL UNDER THE GREEN TECHNOLOGY PILOT PROGRAM

Attorney Docket Number: 83175131	Application Number (if known): 13/027,104	Filing date: February 14, 2011
First Named Inventor: David Bruce Reiche		
Title: METHOD FOR STARTING A MIXED FUEL ENGINE		

APPLICANT HEREBY REQUESTS TO PARTICIPATE IN THE GREEN TECHNOLOGY PILOT PROGRAM FOR THE ABOVE-IDENTIFIED APPLICATION. **See Instruction Sheet on page 2.**

This petition must be timely filed electronically using the USPTO electronic filing system, EFS-Web.

1. By filing this petition:

   Applicant is requesting early publication: Applicant hereby requests early publication under 37 CFR 1.219 and the publication fee set forth in 37 CFR 1.18(d) accompanies this request.

2. By filing this petition: applicant is agreeing to make an election without traverse in a telephonic interview and elect an invention that meets the eligibility requirements for the Green Technology Pilot Program, if the Office determines that the claims are not obviously directed to a single invention. See Instruction Sheet.

3. This request is accompanied by statements of special status for the eligibility requirement.

4. The application contains no more than three (3) independent claims and twenty (20) total claims.

5. The application does not contain any multiple dependent claims.

6. Other attachments: _____

Signature /John D. Russell/	Date July 15, 2011
Name (Print/Typed) John D. Russell	Registration Number 47,048

Note: *Signatures of all the inventors or assignees of record of the entire interest or their representative(s) are required in accordance with 37 CFR 1.33 and 11.18. Please see 37 CFR 1.4(d) for the form of the signature. If necessary, submit multiple forms for more than one signature see below*.*

[X] *Total of 1 forms are submitted.

The information is required to obtain or retain a benefit by the public which is to file (and by the USPTO to process) an application. Confidentiality is governed by 35 U.S.C. 122 and 37 CFR 1.11 and 1.14. This collection is estimated to take 12 hours to complete, including gathering, preparing, and submitting the completed application form to the USPTO. Time will vary depending upon the individual case. Any comments on the amount of time you require to complete this form and/or suggestions for reducing this burden, should be sent to the Chief Information Officer, U.S. Patent and Trademark Office, U.S. Department of Commerce, P.O. Box 1450, Alexandria, VA 22313-1450. DO NOT SEND FEES OR COMPLETED FORMS TO THIS ADDRESS. **SEND TO: Commissioner for Patents, P.O. Box 1450, Alexandria, VA 22313-1450.**

If you need assistance in completing the form, call 1-800-PTO-9199 and select option 2.

IN THE UNITED STATES PATENT AND TRADEMARK OFFICE

Applicants	:	David Bruce Reiche, et al.
Application No.	:	13/027,104
Filed	:	February 14, 2011
Title	:	METHOD FOR STARTING A MIXED FUEL ENGINE
Group Art Unit	:	3747
Confirmation No.	:	6156
Docket No.	:	83175131

Commissioner for Patents
P.O. Box 1450
Alexandria, VA 22313-1450

CERTIFICATE OF TRANSMISSION

I hereby certify that this correspondence is being transmitted via the U.S. Patent and Trademark Office electronic filing system (EFS-Web) to the USPTO on:

July 15, 2011	/Angie C. Farr/
Date	Angie C. Farr

STATEMENTS OF SPECIAL STATUS

Applicants respectfully request consideration of the following statement concerning the basis for the special status as well as the following statement pertaining to the materiality standard.

I. Statement concerning the basis for special status.

Applicants submit that special status is sought on the following basis: the claimed invention materially enhances the quality of the environment.

II. Statement pertaining to the materiality standard.

As a preliminary matter, Applicants note that the following statement refers explicitly to the elements of independent claim 8, which is the broadest claim in many respects.

Applicants submit that the claimed invention materially enhances the quality of the environment by reducing vehicle emissions. Specifically, the claimed invention decreases engine misfire while using high alcohol concentration fuels, thus reducing the release of uncombusted fuel. As explained in the Background and Summary of the subject application, alcohol based fuels are one alternative to oil based fuels such as gasoline. Alcohol fuels have a lower energy density as compared to the energy density of

gasoline, but an alcohol based fuel can lower the possibility of engine knock since alcohol fuels can decrease cylinder temperatures via a higher heat of vaporization. Consequently, engines that operate with alcohol can make up for at least a portion of the difference in energy density between fuels via operating at conditions that may cause the same engine operating with gasoline to knock. However, engines that operate with higher concentration alcohol fuels may have a more difficult time starting at lower engine temperatures because it can be more difficult to vaporize alcohol in the engine at lower temperatures. This decreased fuel vaporization can lead to engine misfires, wherein a cylinder undergoes incomplete combustion, releasing uncombusted fuel to the atmosphere. The claimed invention addresses this issue by providing a method for adjusting an effective compression ratio of a cylinder in response the concentration of alcohol in a fuel while delaying combustion until the second cylinder cycle. For example, claim 8 recites:

> A method for starting an engine, comprising:
>
> adjusting an effective compression ratio and an amount of residual exhaust gas in a cylinder of the engine in response to a number of combustion events since engine stop and a concentration of alcohol in a fuel supplied to the cylinder;
>
> fueling the cylinder during a first cylinder cycle without combusting an air-fuel mixture in the cylinder during the first cylinder cycle; and
>
> fueling the cylinder during a second cylinder cycle and combusting an air-fuel mixture in the cylinder during the second cylinder cycle.

By adjusting an effective compression ratio of a cylinder and an amount of residual exhaust gas in the cylinder in response to a number of combustion events since engine stop and a concentration of alcohol in a fuel supplied to the cylinder, it may be possible to provide more reliable engine starting while an engine is operated with higher concentrations of alcohol. For example, increasing a compression ratio of an engine as a concentration of alcohol in a fuel supplied to the engine increases may improve alcohol vaporization and combustion at lower temperatures. In particular, a compression ratio of an engine or cylinder can be set to a relatively high value for at least a first combustion event since engine stop so that engine compression work can be used to heat the fuel and improve fuel vaporization. Further, by compressing the air-fuel mixture without

undergoing combustion during the first cylinder cycle since engine stop, a fraction of vaporized fuel may remain in the cylinder during subsequent cylinder cycles to reduce the possibility of misfire during cylinder cycles where combustion of an air-fuel mixture is desired. By doing so, engine misfire may be reduced, and the release of uncombusted fuel may be minimized, thus enhancing the quality of the environment.

Please charge any cost incurred in this filing, along with any other costs, to Deposit Account No. 06-1510.

Respectfully submitted,

ALLEMAN HALL MCCOY RUSSELL & TUTTLE LLP

/John D. Russell/
John D. Russell
Registration No. 47,048
Customer No. 36865
Attorney/Agent for Applicants/Assignee
806 S.W. Broadway, Suite 600
Portland, Oregon 97205
Telephone: (503) 459-4141
Facsimile: (503) 459-4142

UNITED STATES PATENT AND TRADEMARK OFFICE

UNITED STATES DEPARTMENT OF COMMERCE
United States Patent and Trademark Office
Address: COMMISSIONER FOR PATENTS
P.O. Box 1450
Alexandria, Virginia 22313-1450
www.uspto.gov

APPLICATION NO.	FILING DATE	FIRST NAMED INVENTOR	ATTORNEY DOCKET NO.	CONFIRMATION NO.
13/027,104	02/14/2011	David Bruce Reiche	83175131	6156

36865 7590 07/25/2011
ALLEMAN HALL MCCOY RUSSELL & TUTTLE, LLP
806 S.W. BROADWAY, SUITE 600
PORTLAND, OR 97205

EXAMINER

ART UNIT	PAPER NUMBER
3747	

MAIL DATE	DELIVERY MODE
07/25/2011	PAPER

Please find below and/or attached an Office communication concerning this application or proceeding.

The time period for reply, if any, is set in the attached communication.

UNITED STATES PATENT AND TRADEMARK OFFICE

Commissioner for Patents
United States Patent and Trademark Office
P.O. Box 1450
Alexandria, VA 22313-1450
www.uspto.gov

ALLEMAN HALL MCCOY RUSSELL & TUTTLE, LLP
806 S.W. BROADWAY
SUITE 600
PORTLAND OR 97205

In re Application of	:	
REICHE, DAVID BRUCE, et al.	:	DECISION ON PETITION
Application No. 13/027,104	:	TO MAKE SPECIAL UNDER
Filed: Feb. 14, 2011	:	THE GREEN TECHNOLOGY
Attorney Docket No. 83175131	:	PILOT PROGRAM

This is a decision on the petition under 37 CFR 1.102, filed July 15, 2011, to make the above-identified application special under the pilot program for applications pertaining to Green Technologies as set forth in 74 Federal Register Notice 64666 (December 8, 2009) and amended by 75 Federal Register Notice 28554 (May 21, 2010) and 75 Federal Register Notice 69049 (November 10, 2010).

The petition is **granted**.

If reconsideration of this decision is desired, a petition for reconsideration must be filed within ONE (1) MONTH OR THIRTY (30) DAYS from the mail date of this decision, whichever is longer. No extension of this time limit can be granted under 37 CFR 1.136(a) or (b). The petition for reconsideration should include an exhaustive attempt to provide the lacking item(s) noted below, since, after a decision on the petition for reconsideration, no further reconsideration or review of the matter will be undertaken by the Director.

A grantable petition to make an application special under 37 CFR 1.102 and the pilot program as set forth in 74 FR 64666 must be directed to a nonprovisional application filed under 35 USC 111(a) or be a national stage entry under 35 USC 371, exclusive of any reissue applications and be filed prior to the date of the notice, December 8, 2009.

In order to qualify for special status, the following requirements must be met. 1) The application must have no more than 3 independent claims and no more than 20 total claims. 2) The application must not contain any multiple dependent claims. 3) The petition must state the basis for seeking special status, i.e., the claimed invention either: A) materially enhances the quality of the environment or B) materially contributes to: i) the discovery or development of renewable energy resources, ii) the more efficient utilization and conservation of energy resources, or iii) greenhouse gas emission reduction. 4) If the disclosure is not clear on its face that the claimed invention materially contributes under category (A) or (B), the petition must be accompanied by a statement by the applicant, assignee, or an attorney/agent registered to practice before the Office explaining how the materiality standard is met. 5) A statement that applicant will agree to make an election without traverse in a telephonic interview if a restriction requirement is made

by the examiner. 6) The petition to make special must be filed electronically. 7) The petition must be filed at least one day prior to the date that a first Office Action appears in the Patent Application Information Retrieval (PAIR) system. 8) The petition must be accompanied by a request for early publication in compliance with 37 CFR 1.219 and include the publication fee as set forth in 37 CFR 1.18(d).

The requirement for a fee for consideration of the petition to make special for applications pertaining to Green Technologies has been waived.

The instant petition complies with items 1 – 8 above. Accordingly, the above-identified application has been accorded "special" status.

Telephone inquiries concerning this decision should be directed to Henry Yuen at 571-272-4856.

The application is being forwarded to the Technology Center Art Unit 3747 for action.

/Henry C. Yuen/

Henry C. Yuen
Quality Assurance Specialist
Technology Center 3700

UNITED STATES PATENT AND TRADEMARK OFFICE

Commissioner for Patents
United States Patent and Trademark Office
P.O. Box 1450

MAILED

DEC 08 2011

OFFICE OF PETITIONS

Browdy and Neimark, PLLC
1625 K Street, N.W.
Suite 1100
Washington DC 20006

In re Application of :
Luis Enrique SUCAR SUCCAR et al. : ON PETITION
Application No. 13/027,157 :
Filed: February 14, 2011 :
Atty. Docket No.: SUCAR=1

This is a decision on the petition under 37 CFR 1.137(b), filed November 10, 2011, to revive the above-identified application.

The petition is **GRANTED**.

The application became abandoned for failure to properly reply in a timely manner to the Notice to File Missing Parts mailed February 28, 2011 (Notice), which set a shortened period for reply of two (2) months. A five-month extension of time under the provisions of 37 CFR 1.136(a) was obtained. The application became abandoned September 29, 2011. A Notice of Abandonment was mailed November 8, 2011.

The petition satisfies the conditions for revival pursuant to 37 CFR 1.137(b) by including (1) a reply in the form of a Response to the Notice mailed May 14, 2009, (2) a petition fee of $1860, and (3) a statement of unintentional delay. The reply to the Notice is accepted as having been unintentionally delayed.

37 CFR 1.137(b)(3) requires a statement that the entire delay in filing the required reply from the due date for the reply until the filing of a grantable petition pursuant to 37 CFR 1.137(b) was unintentional. If the statement contained in the instant petition varies from the language required by 37 CFR 1.137(b)(3), the statement contained in the instant petition is being construed as the statement required by 37 CFR 1.137(b)(3) and petitioner must notify the Office if this is **not** a correct interpretation of the statement contained in the instant petition.

Telephone inquiries relating to this decision should be directed to Robert DeWitty, Petitions Attorney, Office of Petitions (571-272-8427).

The application will be referred to Office of Patent Application Processing for further processing.

Robert DeWitty
Petitions Attorney
Office of Petitions

Doc Code: PET.GREEN
Document Description: Petition for Green Tech Pilot

PTO/SB/420 (11-10)
Approved for use through 01/31/2011. OMB 0651-0062
U.S. Patent and Trademark Office; U.S. DEPARTMENT OF COMMERCE
Under the Paperwork Reduction Act of 1995, no persons are required to respond to a collection of information unless it displays a valid OMB control number.

PETITION TO MAKE SPECIAL UNDER THE GREEN TECHNOLOGY PILOT PROGRAM

Attorney Docket Number:	695451302US	Application Number (if known):	13/027,170- Conf. #6295	Filing date: February 14, 2011
First Named Inventor:	Roy E. McAlister, P.E.			
Title:	METHODS AND SYSTEMS FOR ADAPTIVELY COOLING COMBUSTION CHAMBERS IN ENGINES			

APPLICANT HEREBY REQUESTS TO PARTICIPATE IN THE GREEN TECHNOLOGY PILOT PROGRAM FOR THE ABOVE-IDENTIFIED APPLICATION. See Instruction Sheet on page 2.

This petition must be timely filed electronically using the USPTO electronic filing system, EFS-Web.

1. By filing this petition:

   Applicant is requesting early publication: Applicant hereby requests early publication under 37 CFR 1.219 and the publication fee set forth in 37 CFR 1.18(d) accompanies this request.

2. By filing this petition: applicant is agreeing to make an election without traverse in a telephonic interview and elect an invention that meets the eligibility requirements for the Green Technology Pilot Program, if the Office determines that the claims are not obviously directed to a single invention. See Instruction Sheet.

3. This request is accompanied by statements of special status for the eligibility requirement.

4. The application contains no more than three (3) independent claims and twenty (20) total claims.

5. The application does not contain any multiple dependent claims.

6. Other attachments: Statement in Support of Petition

Signature		Date	August 2, 2011
Name (Print/Typed)	Susan D. Betcher	Registration Number	43,498

Note: Signatures of all the inventors or assignees of record of the entire interest or their representative(s) are required in accordance with 37 CFR 1.33 and 11.18. Please see 37 CFR 1.4(d) for the form of the signature. If necessary, submit multiple forms if more than one signature, see below.*

☐ *Total of 1 forms are submitted.

Docket No.: 695451302US
(PATENT)

IN THE UNITED STATES PATENT AND TRADEMARK OFFICE

In re Patent Application of:
McAlister et al.

Application No.: 13/027,170

Confirmation No.: 6295

Filed: February 14, 2011

Art Unit: 3747

For: METHODS AND SYSTEMS FOR ADAPTIVELY COOLING COMBUSTION CHAMBERS IN ENGINES

Examiner: Not Yet Assigned

STATEMENT IN SUPPORT OF PETITION TO MAKE SPECIAL

MS Missing Parts
Commissioner for Patents
P.O. Box 1450
Alexandria, VA 22313-1450

Sir:

This paper is filed in support of the Petition to Make Special under the Green Technology Pilot Program filed concurrently herewith.

Petitioner hereby states that the referenced application is directed to a single invention that materially enhances the quality of the environment, or that materially contributes to: (1) the discovery or development of renewable energy resources; (2) the more efficient utilization and conservation of energy resources; or (3) green house gas emission reduction.

More specifically, the specification and claims are directed to a method of limiting peak temperature of a combustion chamber in an engine resulting in the more efficient utilization and conservation of energy resources and a reduction of green house gas emissions.

In light of the above, it is requested that the Petition to Make Special under the Green Technology Pilot Program be granted.

Applicant believes no fee is due with this response. However, if a fee is due, please charge our Deposit Account No. 50-0665, under Order No. 695451302US from which the undersigned is authorized to draw.

Dated: August 2, 2011

Respectfully submitted,

By_____

Susan D. Betcher
Registration No. 43,498
PERKINS COIE LLP
P.O. Box 1247
Seattle, Washington 98111-1247
(206) 359-8000
(206) 359-7198 (Fax)
Attorney for Applicant

UNITED STATES PATENT AND TRADEMARK OFFICE

UNITED STATES DEPARTMENT OF COMMERCE
United States Patent and Trademark Office
Address: COMMISSIONER FOR PATENTS
P.O. Box 1450
Alexandria, Virginia 22313-1450
www.uspto.gov

APPLICATION NO.	FILING DATE	FIRST NAMED INVENTOR	ATTORNEY DOCKET NO.	CONFIRMATION NO.
13/027,170	02/14/2011	Roy E. McAlister	69545-1302.US	6295

25096 7590 11/25/2011
PERKINS COIE LLP
PATENT-SEA
P.O. BOX 1247
SEATTLE, WA 98111-1247

EXAMINER

ART UNIT	PAPER NUMBER
3747	

NOTIFICATION DATE	DELIVERY MODE
11/25/2011	ELECTRONIC

Please find below and/or attached an Office communication concerning this application or proceeding.

The time period for reply, if any, is set in the attached communication.

Notice of the Office communication was sent electronically on above-indicated "Notification Date" to the following e-mail address(es):

patentprocurement@perkinscoie.com

UNITED STATES PATENT AND TRADEMARK OFFICE

Commissioner for Patents
United States Patent and Trademark Office
P.O. Box 1450
Alexandria, VA 22313-1450
www.uspto.gov

PERKINS COIE LLP
PATENT-SEA
P.O. BOX 1247
SEATTLE WA 98111-1247

In re Application of	:	
MCALISTER, ROY et. al.	:	DECISION ON PETITION
Application No. 13/027,170	:	TO MAKE SPECIAL UNDER
Filed: February 14, 2011	:	THE GREEN TECHNOLOGY
Attorney Docket No. 69545-1302.US	:	PILOT PROGRAM

This is a decision on the petition under 37 CFR 1.102, filed August 2, 2011, to make the above-identified application special under the pilot program for applications pertaining to Green Technologies as set forth in 74 Federal Register Notice 64666 (December 8, 2009) and amended by 75 Federal Register Notice 28554 (May 21, 2010) and 75 Federal Register Notice 69049 (November 10, 2010).

The petition is **granted**.

A grantable petition to make an application special under 37 CFR 1.102 and the pilot program as set forth in 74 FR 64666 must be directed to a nonprovisional application filed under 35 USC 111(a) or be a national stage entry under 35 USC 371, exclusive of any reissue applications.

If reconsideration of this decision is desired, a petition for reconsideration must be filed within ONE (1) MONTH OR THIRTY (30) DAYS from the mail date of this decision, whichever is longer. No extension of this time limit can be granted under 37 CFR 1.136(a) or (b). The petition for reconsideration should include an exhaustive attempt to provide the lacking item(s) noted below, since, after a decision on the petition for reconsideration, no further reconsideration or review of the matter will be undertaken by the Director.

In order to qualify for special status, the following requirements must be met. 1) The application must have no more than 3 independent claims and no more than 20 total claims. 2) The application must not contain any multiple dependent claims. 3) The petition must state the basis for seeking special status, i.e., the claimed invention either: A) materially enhances the quality of the environment or B) materially contributes to: i) the discovery or development of renewable energy resources, ii) the more efficient utilization and conservation of energy resources, or iii)

greenhouse gas emission reduction. 4) If the disclosure is not clear on its face that the claimed invention materially contributes under category (A) or (B), the petition must be accompanied by a statement by the applicant, assignee, or an attorney/agent registered to practice before the Office explaining how the materiality standard is met. 5) A statement that applicant will agree to make an election without traverse in a telephonic interview if a restriction requirement is made by the examiner. 6) The petition to make special must be filed electronically. 7) The petition must be filed at least one day prior to the date that a first Office Action appears in the Patent Application Information Retrieval (PAIR) system. 8) The petition must be accompanied by a request for early publication in compliance with 37 CFR 1.219 and include the publication fee as set forth in 37 CFR 1.18(d).

The requirement for a fee for consideration of the petition to make special for applications pertaining to Green Technologies has been waived.

The instant petition complies with items 1 – 8 above. Accordingly, the above-identified application has been accorded "special" status.

Telephone inquires concerning this decision should be directed to Henry C. Yuen at 571-272-4856.

This application will be forwarded to the Technology Center Art Unit 3747 for action on the merits commensurate with this decision.

/Henry C. Yuen/

Henry C. Yuen
Quality Assurance Specialist
Technology Center TC 3700

Doc Code: PET.GREEN
Document Description: Petition for Green Tech Pilot

PTO/SB/420 (11-10)
Approved for use through 01/31/2011. OMB 0651-0062
U.S. Patent and Trademark Office; U.S. DEPARTMENT OF COMMERCE
Under the Paperwork Reduction Act of 1995, no persons are required to respond to a collection of information unless it displays a valid OMB control number.

PETITION TO MAKE SPECIAL UNDER THE GREEN TECHNOLOGY PILOT PROGRAM

Attorney Docket Number:	695458606US	Application Number (if known): 13/027,181- Conf. #6325	Filing date: February 14, 2011
First Named Inventor:	Roy E. McAlister, P.E.		
Title:	REACTORS FOR CONDUCTING THERMOCHEMICAL PROCESSES WITH SOLAR HEAT INPUT, AND ASSOCIATED SYSTEMS AND METHODS		

APPLICANT HEREBY REQUESTS TO PARTICIPATE IN THE GREEN TECHNOLOGY PILOT PROGRAM FOR THE ABOVE-IDENTIFIED APPLICATION. See Instruction Sheet on page 2.

This petition must be timely filed electronically using the USPTO electronic filing system, EFS-Web.

1. By filing this petition:

   Applicant is requesting early publication: Applicant hereby requests early publication under 37 CFR 1.219 and the publication fee set forth in 37 CFR 1.18(d) accompanies this request.

2. By filing this petition: applicant is agreeing to make an election without traverse in a telephonic interview and elect an invention that meets the eligibility requirements for the Green Technology Pilot Program, if the Office determines that the claims are not obviously directed to a single invention. See Instruction Sheet.

3. This request is accompanied by statements of special status for the eligibility requirement.

4. The application contains no more than three (3) independent claims and twenty (20) total claims.

5. The application does not contain any multiple dependent claims.

6. Other attachments: Statement in Support of Petition

Signature		Date	5.2.11
Name (Print/Typed)	Susan D. Betcher	Registration Number	43,498

Note: Signatures of all the inventors or assignees of record of the entire interest or their representative(s) are required in accordance with 37 CFR 1.33 and 11.18. Please see 37 CFR 1.4(d) for the form of the signature. If necessary, submit multiple forms if more than one signature, see below.*

☐ *Total of 1 forms are submitted.

Docket No.: 695458606US
(PATENT)

IN THE UNITED STATES PATENT AND TRADEMARK OFFICE

In re Patent Application of:
Roy E. McAlister, P.E.

Application No.: 13/027,181

Confirmation No.: 6325

Filed: February 14, 2011

Art Unit: 3749

For: REACTORS FOR CONDUCTING THERMOCHEMICAL PROCESSES WITH SOLAR HEAT INPUT, AND ASSOCIATED SYSTEMS AND METHODS

Examiner: Not Yet Assigned

STATEMENT IN SUPPORT OF PETITION TO MAKE SPECIAL

MS Missing Parts
Commissioner for Patents
P.O. Box 1450
Alexandria, VA 22313-1450

Sir:

This paper is filed in support of the Petition to Make Special under the Green Technology Pilot Program filed concurrently herewith.

Petitioner hereby states that the referenced application is directed to a single invention that materially enhances the quality of the environment, or that materially contributes to: (1) the discovery or development of renewable energy resources; (2) the more efficient utilization and conservation of energy resources; or (3) green house gas emission reduction.

More specifically, the application and claims are directed to the development of renewable energy sources such as reactors for conducting thermochemical processes with solar heat input.

In light of the above, it is requested that the Petition to Make Special under the Green Technology Pilot Program be granted.

Applicant believes no fee is due with this response. However, if a fee is due, please charge our Deposit Account No. 50-0665, under Order No. 695458606US from which the undersigned is authorized to draw.

Dated: 6.2.11

Respectfully submitted,

By_____

Susan D. Betcher
Registration No.: 43,498
PERKINS COIE LLP
P.O. Box 1247
Seattle, Washington 98111-1247
(206) 359-8000
(206) 359-7198 (Fax)
Attorney for Applicant

UNITED STATES PATENT AND TRADEMARK OFFICE

UNITED STATES DEPARTMENT OF COMMERCE
United States Patent and Trademark Office
Address: COMMISSIONER FOR PATENTS
P.O. Box 1450
Alexandria, Virginia 22313-1450
www.uspto.gov

APPLICATION NO.	FILING DATE	FIRST NAMED INVENTOR	ATTORNEY DOCKET NO.	CONFIRMATION NO.
13/027,181	02/14/2011	Roy Edward McAlister	695458606US	6325

25096 7590 05/25/2011
PERKINS COIE LLP
PATENT-SEA
P.O. BOX 1247
SEATTLE, WA 98111-1247

EXAMINER

ART UNIT	PAPER NUMBER
3749	

NOTIFICATION DATE	DELIVERY MODE
05/25/2011	ELECTRONIC

Please find below and/or attached an Office communication concerning this application or proceeding.

The time period for reply, if any, is set in the attached communication.

Notice of the Office communication was sent electronically on above-indicated "Notification Date" to the following e-mail address(es):

patentprocurement@perkinscoie.com

UNITED STATES PATENT AND TRADEMARK OFFICE

Commissioner for Patents
United States Patent and Trademark Office
P.O. Box 1450
Alexandria, VA 22313-1450
www.uspto.gov

PERKINS COIE LLP
PATENT-SEA
P.O. BOX 1247
SEATTLE WA 98111-1247

In re Application of		
MCALISTER, ROY EDWARD	:	DECISION ON PETITION
Application No. 13/027,181	:	TO MAKE SPECIAL UNDER
Filed: Feb. 14, 2011	:	THE GREEN TECHNOLOGY
Attorney Docket No. 695458606US	:	PILOT PROGRAM

This is a decision on the petition under 37 CFR 1.102, filed May 2, 2011, to make the above-identified application special under the pilot program for applications pertaining to Green Technologies as set forth in 74 Federal Register Notice 64666 (December 8, 2009) and amended by 75 Federal Register Notice 28554 (May 21, 2010) and 75 Federal Register Notice 69049 (November 10, 2010).

The petition is **dismissed**.

A grantable petition to make an application special under 37 CFR 1.102 and the pilot program as set forth in 74 FR 64666 must be directed to a nonprovisional application filed under 35 USC 111(a) or be a national stage entry under 35 USC 371, exclusive of any reissue applications.

If reconsideration of this decision is desired, a petition for reconsideration must be filed within ONE (1) MONTH OR THIRTY (30) DAYS from the mail date of this decision, whichever is longer. No extension of this time limit can be granted under 37 CFR 1.136(a) or (b). The petition for reconsideration should include an exhaustive attempt to provide the lacking item(s) noted below, since, after a decision on the petition for reconsideration, no further reconsideration or review of the matter will be undertaken by the Director.

In order to qualify for special status, the following requirements must be met. 1) The application must have no more than 3 independent claims and no more than 20 total claims. 2) The application must not contain any multiple dependent claims. 3) The petition must state the basis for seeking special status, i.e., the claimed invention either: A) materially enhances the quality of the environment or B) materially contributes to: i) the discovery or development of renewable energy resources, ii) the more efficient utilization and conservation of energy resources, or iii) greenhouse gas emission reduction. 4) If the disclosure is not clear on its face that the claimed invention materially contributes under category (A) or (B), the petition must be accompanied by a statement by the applicant, assignee, or an attorney/agent registered to practice before the

Office explaining how the materiality standard is met. 5) A statement that applicant will agree to make an election without traverse in a telephonic interview if a restriction requirement is made by the examiner. 6) The petition to make special must be filed electronically. 7) The petition must be filed at least one day prior to the date that a first Office Action appears in the Patent Application Information Retrieval (PAIR) system. 8) The petition must be accompanied by a request for early publication in compliance with 37 CFR 1.219 and include the publication fee as set forth in 37 CFR 1.18(d).

The requirement for a fee for consideration of the petition to make special for applications pertaining to Green Technologies has been waived. The petition lacks items #1 and # 5-6.

In regard to item 1, petitioner should note that a review of the application claims has been made for the purposes of determining the number of claims contained therein. This application contains more than 3 independent claims and/or more than 20 total claims. As set forth in the Notice, if the application contains more than 3 independent claims or more than 20 total claims, it will not be eligible to participate in the "Pilot Program for Green Technologies Including Greenhouse Gas Reduction."

In regard to items # 5 and #6, petitioner must include a statement that applicant will agree to make an election without traverse in a telephonic interview if a restriction requirement is made by the examiner. 6) The petition to make special must be filed electronically.

Any reconsideration of this decision should be submitted through the USPTO electronic filing system, EFS-Web, and selecting the document description of "Petition for Green Tech Pilot" on the EFS-Web screen.

Telephone inquiries concerning this decision should be directed to Henry C. Yuen at 571-272-4856. The application will be forwarded to the Technology Center Art Unit 3749 for action in its regular turn.

/Henry C. Yuen/

Henry C. Yuen
Quality Assurance Specialist
Technology Center 3700

Docket No.: 695458606US
(PATENT)

IN THE UNITED STATES PATENT AND TRADEMARK OFFICE

In re Patent Application of:
Roy E. McAlister, P.E.

Application No.: 13/027,181

Confirmation No.: 6325

Filed: February 14, 2011

Art Unit: 1724

For: REACTORS FOR CONDUCTING THERMOCHEMICAL PROCESSES WITH SOLAR HEAT INPUT, AND ASSOCIATED SYSTEMS AND METHODS

Examiner: Not Yet Assigned

RENEWED PETITION TO MAKE SPECIAL UNDER THE GREEN TECHNOLOGY PILOT PROGRAM

Commissioner for Patents
P.O. Box 1450
Alexandria, VA 22313-1450

Sir:

This is a renewed petition under 37 CFR 1.102 to make the present application special under the pilot program for applications pertaining to Green Technologies as set forth in 74 Federal Register Notice 64666 (December 8, 2009). This petition was previously filed on May 2, 2011 but was dismissed in the Decision on Petition to Make Special under the Green Technology Pilot Program mailed May 25, 2011.

In the Decision, the examiner alleged that the following requirements were not met in the Petition as filed on May 2, 2011:

1. The application must have no more than 3 independent claims and no more than 20 total claims.

5. A statement that applicant will agree to make an election without traverse in a telephonic interview if a restriction requirement is made by the examiner.

6. The petition to make special must be filed electronically.

Regarding requirement 1, petitioner submits herewith a Preliminary amendment reducing the number of claims to be within the required limit.

Regarding requirement 5, petitioner hereby agrees to make an election without traverse in a telephonic interview if a restriction requirement is made by the examiner.

Regarding requirement 6, petitioner respectfully submits that the petition filed on May 2, 2011 was filed electronically (copy of eFiling Receipt is attached) and that the present renewed petition is also filed electronically.

Petitioner respectfully requests reconsideration and allowance of the present petition. Petitioner believes no fee is due with this response. However, if a fee is due, please charge our Deposit Account No. 50-0665, under Order No. 695458606US from which the undersigned is authorized to draw.

Dated: 6.27.11

Respectfully submitted,

By_____

Susan D. Betcher
Registration No.: 43,498
PERKINS COIE LLP
P.O. Box 1247
Seattle, Washington 98111-1247
(206) 359-8000
(206) 359-7198 (Fax)
Attorney for Applicant

Attachment

Electronic Acknowledgement Receipt

EFS ID:	10004083
Application Number:	13027181
International Application Number:	
Confirmation Number:	6325
Title of Invention:	COPY REACTORS FOR CONDUCTING THERMOCHEMICAL PROCESSES WITH SOLAR HEAT INPUT, AND ASSOCIATED SYSTEMS AND METHODS
First Named Inventor/Applicant Name:	Roy E. McAlister
Customer Number:	25096
Filer:	Paul T Parker/Alex Holodak
Filer Authorized By:	Paul T Parker
Attorney Docket Number:	695458606US
Receipt Date:	02-MAY-2011
Filing Date:	14-FEB-2011
Time Stamp:	20:22:04
Application Type:	Utility under 35 USC 111(a)

Payment information:

Submitted with Payment	yes
Payment Type	Electronic Funds Transfer
Payment was successfully received in RAM	$527
RAM confirmation Number	7032
Deposit Account	
Authorized User	

File Listing:

Document Number	Document Description	File Name	File Size(Bytes)/ Message Digest	Multi Part /.zip	Pages (if appl.)

1	COPY	RMP_695458606US.PDF	1017147 7062343887a14c66c09e4ebff5b0cb61f5b495b2	yes	26

Multipart Description/PDF files in .zip description		
Document Description	**Start**	**End**
Applicant Response to Pre-Exam Formalities Notice	1	2
Miscellaneous Incoming Letter	3	3
Application Data Sheet	4	6
Preliminary Amendment	7	15
Green Tech Petition under 37 CFR 1.102	16	18
Authorization for Extension of Time all replies	19	20
Oath or Declaration filed	21	22
Power of Attorney	23	26

Warnings:

Information:

2	Fee Worksheet (PTO-875)	fee-info.pdf	37085 7e75a9e789877bac0cd17c2e6ab00570d6134f34	no	2

Warnings:

Information:

Total Files Size (in bytes):	1054232

This Acknowledgement Receipt evidences receipt on the noted date by the USPTO of the indicated documents, characterized by the applicant, and including page counts, where applicable. It serves as evidence of receipt similar to a Post Card, as described in MPEP 503.

COPY

New Applications Under 35 U.S.C. 111

If a new application is being filed and the application includes the necessary components for a filing date (see 37 CFR 1.53(b)-(d) and MPEP 506), a Filing Receipt (37 CFR 1.54) will be issued in due course and the date shown on this Acknowledgement Receipt will establish the filing date of the application.

National Stage of an International Application under 35 U.S.C. 371

If a timely submission to enter the national stage of an international application is compliant with the conditions of 35 U.S.C. 371 and other applicable requirements a Form PCT/DO/EO/903 indicating acceptance of the application as a national stage submission under 35 U.S.C. 371 will be issued in addition to the Filing Receipt, in due course.

New International Application Filed with the USPTO as a Receiving Office

If a new international application is being filed and the international application includes the necessary components for an international filing date (see PCT Article 11 and MPEP 1810), a Notification of the International Application Number and of the International Filing Date (Form PCT/RO/105) will be issued in due course, subject to prescriptions concerning national security, and the date shown on this Acknowledgement Receipt will establish the international filing date of the application.

UNITED STATES PATENT AND TRADEMARK OFFICE

UNITED STATES DEPARTMENT OF COMMERCE
United States Patent and Trademark Office
Address: COMMISSIONER FOR PATENTS
P.O. Box 1450
Alexandria, Virginia 22313-1450
www.uspto.gov

APPLICATION NO.	FILING DATE	FIRST NAMED INVENTOR	ATTORNEY DOCKET NO.	CONFIRMATION NO.
13/027,181	02/14/2011	Roy Edward McAlister	695458606US	6325

25096 7590 08/05/2011
PERKINS COIE LLP
PATENT-SEA
P.O. BOX 1247
SEATTLE, WA 98111-1247

EXAMINER

ART UNIT	PAPER NUMBER
1724	

NOTIFICATION DATE	DELIVERY MODE
08/05/2011	ELECTRONIC

Please find below and/or attached an Office communication concerning this application or proceeding.

The time period for reply, if any, is set in the attached communication.

Notice of the Office communication was sent electronically on above-indicated "Notification Date" to the following e-mail address(es):

patentprocurement@perkinscoie.com

UNITED STATES PATENT AND TRADEMARK OFFICE

Commissioner for Patents
United States Patent and Trademark Office
P.O. Box 1450
Alexandria, VA 22313-1450
www.uspto.gov

8/5/11

PERKINS COIE LLP
PATENT-SEA
P.O. BOX 1247
SEATTLE WA 98111-1247

In re Application of	:	
McAlister	:	DECISION ON PETITION
Application No. 13/027,181	:	TO MAKE SPECIAL UNDER
Filed: 2/14/2011	:	THE GREEN TECHNOLOGY
Attorney Docket No. **695458606US**	:	PILOT PROGRAM

This is a decision on the request for reconsideration, filed 6/27/2011, to make the above-identified application special under the pilot program for applications pertaining to Green Technologies as set forth in 74 Federal Register Notice 64666 (December 8, 2009) and amended by 75 Federal Register Notice 28554 (May 21, 2010) and 75 Federal Register Notice 69049 (November 10, 2010).

The petition is **GRANTED**.

A grantable petition to make an application special under 37 CFR 1.102 and the pilot program as set forth in 74 FR 64666 must be directed to a nonprovisional application filed under 35 USC 111(a) or be a national stage entry under 35 USC 371, exclusive of any reissue applications.

In order to qualify for special status, the following requirements must be met. 1) The application must have no more than 3 independent claims and no more than 20 total claims. 2) The application must not contain any multiple dependent claims. 3) The petition must state the basis for seeking special status, i.e., the claimed invention either: A) materially enhances the quality of the environment or B) materially contributes to: i) the discovery or development of renewable energy resources, ii) the more efficient utilization and conservation of energy resources, or iii) greenhouse gas emission reduction. 4) If the disclosure is not clear on its face that the claimed invention materially contributes under category (A) or (B), the petition must be accompanied by a statement by the applicant, assignee, or an attorney/agent registered to practice before the Office explaining how the materiality standard is met. 5) A statement that applicant will agree to make an election without traverse in a telephonic interview if a restriction requirement is made by the examiner. 6) The petition to make special must be filed electronically. 7) The petition must be filed at least one day prior to the date that a first Office Action appears in the Patent Application Information Retrieval (PAIR) system. 8) The petition must be accompanied by a

request for early publication in compliance with 37 CFR 1.219 and include the publication fee as set forth in 37 CFR 1.18(d).

The requirement for a fee for consideration of the petition to make special for applications pertaining to Green Technologies has been waived.

The instant petition complies with items 1 – 8 above. Accordingly, the above-identified application has been accorded "special" status.

Telephone inquires concerning this decision should be directed to Tom Dunn at 571-272-1171.

The application is being forwarded to the Technology Center Art Unit 1724 for action on the merits commensurate with this decision.

/Tom Dunn/

Tom Dunn
Quality Assurance Specialist
Technology Center 1700

Doc Code: PET.GREEN
Document Description: Petition for Green Tech Pilot

PTO/SB/420 (11-10)
Approved for use through 01/31/2011. OMB 0651-0062
U.S. Patent and Trademark Office; U.S. DEPARTMENT OF COMMERCE
Under the Paperwork Reduction Act of 1995, no persons are required to respond to a collection of information unless it displays a valid OMB control number.

PETITION TO MAKE SPECIAL UNDER THE GREEN TECHNOLOGY PILOT PROGRAM

Attorney Docket Number:	695459105US	Application Number (if known): 13/027,185- Conf. #6331	Filing date: February 14, 2011
First Named Inventor:	Roy E. McAlister, P.E.		
Title:	ENGINEERED FUEL STORAGE, RESPECIATION AND TRANSPORT		

APPLICANT HEREBY REQUESTS TO PARTICIPATE IN THE GREEN TECHNOLOGY PILOT PROGRAM FOR THE ABOVE-IDENTIFIED APPLICATION. See Instruction Sheet on page 2.

This petition must be timely filed electronically using the USPTO electronic filing system, EFS-Web.

1. By filing this petition:

   Applicant is requesting early publication: Applicant hereby requests early publication under 37 CFR 1.219 and the publication fee set forth in 37 CFR 1.18(d) accompanies this request.

2. By filing this petition: applicant is agreeing to make an election without traverse in a telephonic interview and elect an invention that meets the eligibility requirements for the Green Technology Pilot Program, if the Office determines that the claims are not obviously directed to a single invention. See Instruction Sheet.

3. This request is accompanied by statements of special status for the eligibility requirement.

4. The application contains no more than three (3) independent claims and twenty (20) total claims.

5. The application does not contain any multiple dependent claims.

6. Other attachments: Statement in Support of Petition

Signature		Date	5.2.11
Name (Print/Typed)	Susan D. Betcher	Registration Number	43,498

Note: Signatures of all the inventors or assignees of record of the entire interest or their representative(s) are required in accordance with 37 CFR 1.33 and 11.18. Please see 37 CFR 1.4(d) for the form of the signature. If necessary, submit multiple forms if more than one signature, see below.*

☐ *Total of 1 forms are submitted.

Docket No.: 695459105US
(PATENT)

IN THE UNITED STATES PATENT AND TRADEMARK OFFICE

In re Patent Application of:
Roy E. McAlister, P.E.

Application No.: 13/027,185

Confirmation No.: 6331

Filed: February 14, 2011

Art Unit: 1721

For: ENGINEERED FUEL STORAGE, RESPECIATION AND TRANSPORT

Examiner: Not Yet Assigned

STATEMENT IN SUPPORT OF PETITION TO MAKE SPECIAL

MS Missing Parts
Commissioner for Patents
P.O. Box 1450
Alexandria, VA 22313-1450

Sir:

This paper is filed in support of the Petition to Make Special under the Green Technology Pilot Program filed concurrently herewith.

Petitioner hereby states that the referenced application is directed to a single invention that materially enhances the quality of the environment, or that materially contributes to: (1) the discovery or development of renewable energy resources; (2) the more efficient utilization and conservation of energy resources; or (3) green house gas emission reduction.

More specifically, the application and claims are directed to a method of transporting renewable fuel.

In light of the above, it is requested that the Petition to Make Special under the Green Technology Pilot Program be granted.

Applicant believes no fee is due with this response. However, if a fee is due, please charge our Deposit Account No. 50-0665, under Order No. 695459105US from which the undersigned is authorized to draw.

Respectfully submitted,

Dated: 5.2.11

By _____
Susan D. Betcher
Registration No.: 43,498

PERKINS COIE LLP
P.O. Box 1247
Seattle, Washington 98111-1247
(206) 359-8000
(206) 359-7198 (Fax)
Attorney for Applicant

UNITED STATES PATENT AND TRADEMARK OFFICE

UNITED STATES DEPARTMENT OF COMMERCE
United States Patent and Trademark Office
Address: COMMISSIONER FOR PATENTS
P.O. Box 1450
Alexandria, Virginia 22313-1450
www.uspto.gov

APPLICATION NO.	FILING DATE	FIRST NAMED INVENTOR	ATTORNEY DOCKET NO.	CONFIRMATION NO.
13/027,185	02/14/2011	Roy Edward McAlister	695459105US	6331

25096 7590 05/26/2011
PERKINS COIE LLP
PATENT-SEA
P.O. BOX 1247
SEATTLE, WA 98111-1247

EXAMINER

ART UNIT	PAPER NUMBER
1721	

NOTIFICATION DATE	DELIVERY MODE
05/26/2011	ELECTRONIC

Please find below and/or attached an Office communication concerning this application or proceeding.

The time period for reply, if any, is set in the attached communication.

Notice of the Office communication was sent electronically on above-indicated "Notification Date" to the following e-mail address(es):

patentprocurement@perkinscoie.com

UNITED STATES PATENT AND TRADEMARK OFFICE

Commissioner for Patents
United States Patent and Trademark Office
P.O. Box 1450
Alexandria, VA 22313-1450
www.uspto.gov

5/26/11

PERKINS COIE LLP
PATENT-SEA
P.O. BOX 1247
SEATTLE WA 98111-1247

In re Application of	:	
McAlister	:	DECISION ON PETITION
Application No. 13/027,185	:	TO MAKE SPECIAL UNDER
Filed: 2/14/2011	:	THE GREEN TECHNOLOGY
Attorney Docket No. **695459105US**	:	PILOT PROGRAM

This is a decision on the petition under 37 CFR 1.102, filed 5/2/2011, to make the above-identified application special under the pilot program for applications pertaining to Green Technologies as set forth in 74 Federal Register Notice 64666 (December 8, 2009) and amended by 75 Federal Register Notice 28554 (May 21, 2010) and 75 Federal Register Notice 69049 (November 10, 2010).

The petition is **GRANTED**.

A grantable petition to make an application special under 37 CFR 1.102 and the pilot program as set forth in 74 FR 64666 must be directed to a nonprovisional application filed under 35 USC 111(a) or be a national stage entry under 35 USC 371, exclusive of any reissue applications.

In order to qualify for special status, the following requirements must be met. 1) The application must have no more than 3 independent claims and no more than 20 total claims. 2) The application must not contain any multiple dependent claims. 3) The petition must state the basis for seeking special status, i.e., the claimed invention either: A) materially enhances the quality of the environment or B) materially contributes to: i) the discovery or development of renewable energy resources, ii) the more efficient utilization and conservation of energy resources, or iii) greenhouse gas emission reduction. 4) If the disclosure is not clear on its face that the claimed invention materially contributes under category (A) or (B), the petition must be accompanied by a statement by the applicant, assignee, or an attorney/agent registered to practice before the Office explaining how the materiality standard is met. 5) A statement that applicant will agree to make an election without traverse in a telephonic interview if a restriction requirement is made by the examiner. 6) The petition to make special must be filed electronically. 7) The petition must be filed at least one day prior to the date that a first Office Action appears in the Patent Application Information Retrieval.(PAIR) system. 8) The petition must be accompanied by a

request for early publication in compliance with 37 CFR 1.219 and include the publication fee as set forth in 37 CFR 1.18(d).

The requirement for a fee for consideration of the petition to make special for applications pertaining to Green Technologies has been waived.

The instant petition complies with items 1 – 8 above. Accordingly, the above-identified application has been accorded "special" status.

Telephone inquires concerning this decision should be directed to Tom Dunn at 571-272-1171.

The application is being forwarded to the Technology Center Art Unit 1721 for action on the merits commensurate with this decision.

/Tom Dunn/

Tom Dunn
Quality Assurance Specialist
Technology Center 1700

PTO/SB/20PCT-KR (06-10)
Approved for use through 01/31/2012. OMB 0651-0058
U.S. Patent and Trademark Office; U.S. DEPARTMENT OF COMMERCE
Under the Paperwork Reduction Act of 1995, no persons are required to respond to a collection of information unless it displays a valid OMB control number.

REQUEST FOR PARTICIPATION IN THE PATENT COOPERATION TREATY – PATENT PROSECUTION HIGHWAY (PCT-PPH) PILOT PROGRAM BETWEEN THE KOREAN INTELLECTUAL PROPERTY OFFICE (KIPO) AND THE USPTO

Application No.:	13/027,185-Conf. #6331	Filing Date:	February 14, 2011
First Named Inventor:	Roy E. McAlister, P.E.		
Title of the Invention:	ENGINEERED FUEL STORAGE, RESPECIATION AND TRANSPORT		

THIS REQUEST FOR PARTICIPATION IN THE PCT-PPH PILOT PROGRAM ALONG WITH THE REQUIRED DOCUMENTS MUST BE SUBMITTED VIA EFS-WEB. INFORMATION REGARDING EFS-WEB IS AVAILABLE AT HTTP://WWW.USPTO.GOV/EBC/EFS_HELP.HTML.

APPLICANT HEREBY REQUESTS PARTICIPATION IN THE PCT-PPH PROGRAM AND PETITIONS TO MAKE THE ABOVE-IDENTIFIED APPLICATION SPECIAL UNDER THE PCT-PPH PROGRAM.

The above-identified application is (1) a national stage entry of the corresponding PCT application, or (2) a national stage entry of another PCT application which claims priority to the corresponding PCT application, or (3) a national application that claims domestic/ foreign priority to the corresponding PCT application, or (4) a national application which forms the basis for the priority claim in the corresponding PCT application, or (5) a continuing application of a U.S. application that satisfies one of (1) to (4) above, or (6) a U.S. application that claims domestic benefit to a U.S. provisional application which forms the basis for the priority claim in the corresponding PCT application.

The corresponding PCT application number(s) is/are: PCT/US11/24799

The international date of the corresponding PCT application(s) is/are: February 14, 2011

I. **List of Required Documents:**

a. **A copy of the latest international work product (WO/ISA, WO/IPEA, or IPER) in the above-identified corresponding PCT application(s).**

[x] Is attached.

[ ] Is not attached because the document is already in the U.S. application.

b. **A copy of all claims which were indicated as having novelty, inventive step and industrial applicability in the above-identified corresponding PCT appliction(s).**

[x] Is attached.

[ ] Is not attached because the document is already in the U.S. application.

c. **English translations of the documents in a. and b. above are attached (if the documents are not in the English language). A statement that the English translation is accurate is attached for the document in b. above.**

Under the Paperwork Reduction Act of 1995, no persons are required to respond to a collection of information unless it displays a valid OMB control number.

REQUEST FOR PARTICIPATION IN THE PCT-PPH PILOT PROGRAM BETWEEN THE KIPO AND THE USPTO
(continued)

Application No.:	13/027,185-Conf. #6331
First Named Inventor:	Roy E. McAlister, P.E.

d. **(1) An information disclosure statement listing the documents cited in the international work products (ISR, WO/ISA, WO/IPEA, IPER) of the corresponding PCT application.**

[x] Is attached.

[ ] Has already been filed in the above-identified U.S. application on _____

(2) Copies of all documents (except) for U.S. patents or U.S. patent application publications)

[x] Are attached.

[ ] Have already been filed in the above-identified U.S. application on _____

II. Claims Correspondence Table:

Claims in US Application	Patentable Claims in the corresponding PCT Application	Explanation regarding the correspondence
1-14, 16, 18, 20-23	1-14, 16, 18, 20-23	The claims pending in the US application are identical to their corresponding claims in the PCT Application.

III. All the claims in the US application sufficiently correspond to the patentable claims in the corresponding PCT application.

Signature	/sdb/	Date	1/23/12
Name (Print/Typed)	Susan D. Betcher	Registration Number	43,498

(12) INTERNATIONAL APPLICATION PUBLISHED UNDER THE PATENT COOPERATION TREATY (PCT)

(19) World Intellectual Property Organization
International Bureau

(43) International Publication Date
18 August 2011 (18.08.2011)

PCT

(10) International Publication Number
WO 2011/100719 A2

(51) International Patent Classification:
C10B 53/02 (2006.01) *B09B 3/00* (2006.01)
C01B 3/02 (2006.01) *C07C 4/04* (2006.01)

(21) International Application Number:
PCT/US2011/024799

(22) International Filing Date:
14 February 2011 (14.02.2011)

(25) Filing Language: English

(26) Publication Language: English

(30) Priority Data:
61/304,403 13 February 2010 (13.02.2010) US
61/421,189 8 December 2010 (08.12.2010) US

(72) Inventor; and
(71) Applicant : **MCALISTER, Roy, Edward** [US/US]; 2350 W Shangri La, Phoenix, AZ 85029 (US).

(74) Agents: **BETCHER, Susan, D.** et al.; Perkins Coie LLP, P.O. Box 1247, Seattle, WA 98111-1247 (US).

(81) Designated States *(unless otherwise indicated, for every kind of national protection available)*: AE, AG, AL, AM, AO, AT, AU, AZ, BA, BB, BG, BH, BR, BW, BY, BZ, CA, CH, CL, CN, CO, CR, CU, CZ, DE, DK, DM, DO, DZ, EC, EE, EG, ES, FI, GB, GD, GE, GH, GM, GT, HN, HR, HU, ID, IL, IN, IS, JP, KE, KG, KM, KN, KP, KR, KZ, LA, LC, LK, LR, LS, LT, LU, LY, MA, MD, ME, MG, MK, MN, MW, MX, MY, MZ, NA, NG, NI, NO, NZ, OM, PE, PG, PH, PL, PT, RO, RS, RU, SC, SD, SE, SG, SK, SL, SM, ST, SV, SY, TH, TJ, TM, TN, TR, TT, TZ, UA, UG, US, UZ, VC, VN, ZA, ZM, ZW.

(84) Designated States *(unless otherwise indicated, for every kind of regional protection available)*: ARIPO (BW, GH, GM, KE, LR, LS, MW, MZ, NA, SD, SL, SZ, TZ, UG, ZM, ZW), Eurasian (AM, AZ, BY, KG, KZ, MD, RU, TJ, TM), European (AL, AT, BE, BG, CH, CY, CZ, DE, DK, EE, ES, FI, FR, GB, GR, HR, HU, IE, IS, IT, LT, LU, LV, MC, MK, MT, NL, NO, PL, PT, RO, RS, SE, SI, SK, SM, TR), OAPI (BF, BJ, CF, CG, CI, CM, GA, GN, GQ, GW, ML, MR, NE, SN, TD, TG).

Published:
— *without international search report and to be republished upon receipt of that report (Rule 48.2(g))*

(54) Title: ENGINEERED FUEL STORAGE, RESPECIATION AND TRANSPORT

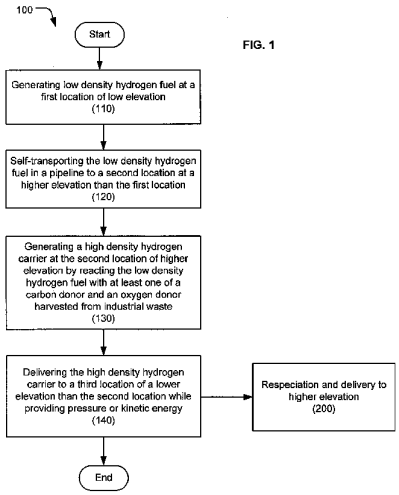

FIG. 1

(57) Abstract: Techniques, systems and material are disclosed for thermochemical regeneration of biomass into renewable engineered fuel, storage of the renewable engineered fuel, respeciation of the renewable engineered fuel and transport. In one aspect, a method includes generating low density hydrogen fuel from biomass dissociation at a first location of a low elevation. The low density hydrogen fuel is self- transported in a pipeline to a second location at a higher elevation than the first location by traveling from the first location to the second location without adding energy of pressure. A high density hydrogen carrier is generated at the second location of higher elevation by reacting the low density hydrogen fuel with at least one of a carbon donor, a nitrogen donor and an oxygen donor harvested from industrial waste. The high density hydrogen carrier is delivered to a third location of a lower elevation than the second location while providing pressure or kinetic energy.

WO 2011/100719 A2

ENGINEERED FUEL STORAGE, RESPECIATION AND TRANSPORT

CLAIM OF PRIORITY

[0001] The present application claims priority to and the benefit of U.S. Patent Application No. 61/304,403, filed on February 13, 2010 and titled FULL SPECTRUM ENERGY AND RESOURCE INDEPENDENCE, and U.S. Patent Application No. 61/421,189, filed on December 8, 2010 and titled LIQUID FUELS FROM HYDROGEN, OXIDES OF CARBON, AND/OR NITROGEN; AND PRODUCTION OF CARBON FOR MANUFACTURING DURABLE GOODS. Each of these applications is incorporated herein by reference in its entirety. To the extent the foregoing application and/or any other materials incorporated herein by reference conflict with the disclosure presented herein, the disclosure herein controls.

BACKGROUND

[0002] This application relates to devices, techniques and materials related to biofuels.

[0003] Engineered fuel such as pure hydrogen and methane gases are difficult and costly to store and transport. For example, compressors needed to pressurize hydrogen and/or methane and other products can involve sizeable capital expenditures, large expenditures for electricity and attendant production of greenhouse gases, and high operating costs. Further, the pipelines for transporting the pressurized hydrogen and/or methane often incur costly maintenance and repair costs.

[0004] In addition to the compressed-gas fuel form, hydrogen can be converted to cryogenic liquid or slush for storage. Liquid hydrogen is generally stored at -420°F (-252°C) at atmospheric pressure and often transported through unprotected delivery lines, parts of which can be damaged due to atmospheric water vapor condensation and freezing. Storage and transport of cryogenic methane face similar costs.

[0005] Moreover, the high cost of storage and transport for hydrogen and methane is met with low energy density. For example, a gallon of cryogenic liquid methane at

-256°C provides an energy density of 89,000 BTU/gal about 28% less than a gallon of gasoline. Liquid hydrogen at -252°C provides only about 29,700 BTU/gal or 76% less than gasoline.

SUMMARY

[0006] Techniques, structures, apparatus and materials are disclosed for thermochemical regeneration of biomass into renewable engineered fuel, storage of the generated renewable engineered fuel, respeciation of the renewable engineered fuel and transport.

[0007] In one aspect, a method of transporting renewable fuel can include generating low density hydrogen fuel from biomass dissociation at a first location of a low elevation. The low density hydrogen fuel can be self-transported in a pipeline to a second location at a higher elevation than the first location. The low density hydrogen fuel travels from the first location to the second location without adding energy or pressure. A high density hydrogen carrier is generated at the second location of higher elevation by reacting the low density hydrogen fuel with at least one of a carbon donor, a nitrogen donor and an oxygen donor. The high density hydrogen carrier is delivered to a third location of a lower elevation than the second location while providing pressure or kinetic energy.

[0008] Implementations can optionally include one or more of the following features. Generating the low density hydrogen fuel can include applying waste heat recovered from an external energy source or heat generated from a renewable energy source. The high density hydrogen carrier can include at least one of hydrocarbon, alcohol and ammonia. The hydrocarbon can include at least one of methane and ethane. The alcohol can include at least one of methanol and ethanol. The carbon donor can include carbon dioxide and the hydrogen donor can include water. The method can include dissolving a hazardous contaminant in the high density hydrogen carrier to generate a liquid mixture that isolates the hazardous contaminant from an environment. The liquid mixture can control a vapor pressure or availability of the vapor pressure. The method can include applying heat to the liquid mixture to generate oxygenated fuel mixture with a ratio of hydrogen to carbon that is higher than the high density hydrogen carrier. The method can include transporting in a pipeline

the hydrogen generated from the liquid mixture to a fourth location at a higher elevation than the third location without adding energy or pressure. The method can include applying heat to the high density hydrogen carrier to generate oxygenated fuel with a ratio of hydrogen to carbon that is higher than the high density hydrogen carrier. The method can include transporting in a pipeline the hydrogen generated from the high density hydrogen carrier to a fourth location at a higher elevation than the third location without adding energy or pressure. The at least one of a carbon donor, a nitrogen donor and an oxygen donor can be harvested from industrial waste.

[0009] In another aspect, a pipeline system of transporting renewable fuel can include a biomass conversion plant at a first location of a low elevation to generate low density hydrogen fuel from biomass dissociation. A first pipeline connects the biomass conversion plant to a second location of a higher elevation than the first location. The low density hydrogen fuel travels within the pipeline from the first location to the second location without added energy of pressure. A thermochemical reactor is connected to the second location of the higher elevation to generate a high density hydrogen carrier. The thermochemical reactor reacts the low density hydrogen fuel with at least one of a carbon donor, a nitrogen donor and an oxygen donor. A second pipeline connects the thermochemical reactor to a third location of a lower elevation than the second location. The high density hydrogen carrier is delivered to the third location with at least one of pressure or kinetic energy generated by the high density hydrogen carrier.

[0010] Implementations can optionally include one or more of the following features. The thermochemical reactor can include a countercurrent heat exchanger to apply waste heat recovered from an external energy source or heat generated from a renewable energy source. The high density hydrogen carrier can include at least one of hydrocarbon, alcohol and ammonia. The hydrocarbon can include at least one of methane and ethane. The alcohol can include at least one of methanol and ethanol. The carbon donor can include carbon dioxide and the hydrogen donor can include water. The pipeline system can include a contaminant recovery system connected to the thermochemical reactor. The contaminant recovery system can be configured to harvest a hazardous contaminant; and dissolve the harvested hazardous contaminant in the high density hydrogen carrier to generate a liquid mixture that isolates the hazardous contaminant from an environment. The liquid mixture can control a vapor

pressure or availability of the vapor pressure. The liquid mixture can be transported in the second pipeline to the third location using at least one of pressure and kinetic energy generated by the liquid mixture. The pipeline system can include a second thermochemical reactor connected to the third location to dissociate the liquid mixture, using an anaerobic reaction, to generate an oxygenated fuel mixture with a ratio of hydrogen to carbon that is higher than the high density hydrogen carrier. The pipeline system can include a second countercurrent heat exchanger connected to the second thermochemical reactor to apply heat to the liquid mixture to generate the oxygenated fuel mixture. The pipeline system can include a third pipeline connecting the second thermochemical reactor at a fourth location of a higher elevation than the third location without adding energy or pressure. The at least one of carbon donor, nitrogen donor and the oxygen donor can be harvested from an industrial process.

[0011] The subject matter described in this specification potentially can provide one or more of the following advantages. For example, the described techniques and systems can be used to avoid the high costs of compressing or cryogenically freezing biofuels, such as hydrogen and methane fuels. In addition, the costs associated with maintaining a pipeline for transporting gaseous and liquefied hydrogen fuel can be avoided. The described techniques can be used to selectively respeciate a given renewable fuel for efficient storage and transport.

BRIEF DESCRIPTION OF THE DRAWINGS

[0012] Figure 1 is a process flow diagram of an exemplary process for generating renewable fuel from biomass waste at one location, selectively respeciating the generated renewable fuel for storage and/or transport to another location.

[0013] Figure 2 is a process flow diagram of an exemplary process for respeciating high density hydrogen carrier fuel at a lower elevation to a low density hydrogen fuel and delivering the respeciated fuel to a higher elevation.

[0014] Figure 3 is a process flow diagram of an exemplary process for respeciating the low density hydrogen fuel at the high elevation location to obtain a high density hydrogen carrier fuel and deliver the respeciated fuel to a lower elevation location.

[0015] Figure 4 is a block diagram of a system for generating renewable fuel from biomass waste, selectively respeciating the generated fuel and delivering the selectively respeciated fuel to a target location.

[0016] Figure 5 shows a process flow diagram of a process for a rapid conversion of carbon, hydrogen and oxygen containing biomass wastes into useful renewable sources of carbon and hydrogen that can be used to produce carbon-based durable goods and renewable fuel.

[0017] Figure 6 shows an exemplary system for dissociating biomass waste into hydrogen and carbon carrying intermediaries.

[0018] Figure 7 is a process flow diagram of a process for generating high density hydrogen carriers by reinvesting, repurposing or recycling carbon dioxide harvested from waste generated by industrial processes to react with low density hydrogen from biomass waste dissociation.

[0019] Figure 8 is a block diagram showing an exemplary system for repurposing or recycling CO_2 harvested from industrial processes as waste to create renewable fuel by reacting with biomass produced hydrogen.

[0020] Figure 9 is a process flow diagram of a process for dissociating hydrocarbons and alcohols to obtain carbon and hydrogen.

[0021] Figure 10 is a block diagram of a system for respeciating high density hydrogen carrier fuel to generate low density hydrogen fuel.

[0022] Like reference symbols and designations in the various drawings indicate like elements.

DETAILED DESCRIPTION

[0023] Techniques, structures, apparatus and materials are disclosed for thermochemical regeneration of biomass waste into renewable engineered fuel, storage of the generated renewable engineered fuel, respeciation of the renewable engineered fuel and transport of the engineered fuel. The economic barrier to hydrogen transportation and storage is high due to the low-dense nature of hydrogen. The described techniques and systems take advantage of that low-dense nature. As described herein, the low density hydrogen is generated from biomass waste at the

source of biomass waste at a low elevation location and self-delivered to a higher elevation second location. Hydrogen is respeciated to a dense hydrogen carrier (hydrocarbon, alcohol) which is delivered to a lower elevation third location as a part of a energy divergence process. The delivery to the lower elevation provides either pressure or kinetic energy at the low elevation.

[0024] Figure 1 is a process flow diagram of an exemplary process 100 for generating renewable fuel from biomass waste at one location, selectively respeciating the generated renewable fuel for storage and/or transport to another location. A system (e.g., system 400) generates low density hydrogen fuel (e.g., hydrogen gas) from biomass dissociation at a first location of a low elevation (110). The process of biomass dissociation to generate the low density hydrogen is described in a copending U.S. Patent Application entitled "Carbon-Based Durable Goods and Renewable Fuel from Biomass Dissociation," (Attorney Docket No. 69545-9002.US00), the entire contents of which are incorporated by reference. Also, the biomass dissociation to generate hydrogen is further described with respect to Figures 5 and 6.

[0025] The generated hydrogen is self-transported from the low elevation location to a second location of a higher elevation (120). Because the density of the generated hydrogen is low, the hydrogen gas freely rises to the higher elevation second location without any added energy or pressure. At the higher elevation second location, the freely transported hydrogen fuel is converted to a denser species of hydrogen carriers, such as hydrocarbon, alcohol, etc. (130). For example, at the second location of higher elevation, the low density hydrogen can be reacted with at least one of a carbon donor (e.g., CO_2) and an oxygen donor (e.g., H_2O) harvested from industrial waste to generate hydrocarbons, alcohols, ammonia, etc.

[0026] The generated high density hydrogen fuel can be transported to a third location of a lower elevation (140). For example, liquid methanol can produce a 'head' in a pipeline on delivery to the lower elevation third location as the liquid methanol descends and gains kinetic energy. The delivered methanol can provide energy conversion by turning a turbine, for example as methanol descends to the third location.

[0027] The renewable fuel deliver can continue by respeciating the high-density hydrogen fuel at the third location of low elevation to a low density hydrogen fuel and

self-transporting the respeciated hydrogen fuel to a fourth location of a higher elevation. Figure 2 is a process flow diagram of an exemplary process 200 for respeciating high density hydrogen carrier fuel at a lower elevation to a low density hydrogen fuel and delivering the respeciated fuel to a higher elevation. A system (e.g., system 400) receives the higher density hydrogen carrier from the higher elevation location (210). The system respeciates the received higher density hydrogen carrier to obtain low density hydrogen fuel (220). The low density hydrogen fuel is self-transported to a higher elevation location (230). The self-transported hydrogen fuel can be respeciated and delivered to a lower elevation location again as shown in the process 300 of Figure 3 below.

[0028] To continue transporting the renewable fuel, the low density hydrogen fuel received at the higher elevation location is respeciated and delivered to a lower elevation location. Figure 3 is a process flow diagram of an exemplary process 300 for respeciating the low density hydrogen fuel at the high elevation location to obtain a high density hydrogen carrier fuel and deliver the respeciated fuel to a lower elevation location. A system (e.g., system 400) receives the low density hydrogen fuel from the lower elevation location (310). The system respeciates the received low density hydrogen fuel to obtain high density hydrogen carrier fuel (320). The high density hydrogen carrier fuel is self-transported to a higher elevation location (330).

[0029] The selective respeciation and delivery of the renewable fuel as shown and described in processes 200 and 300 are alternately performed until the renewable fuel is delivered to a desired location. Describe below are processes and systems for respeciating and delivering various species of the renewable fuel.

[0030] Figure 4 is a block diagram of a system 400 for generating renewable fuel from biomass waste 402, selectively respeciating the generated fuel and delivering the selectively respeciated fuel to a target location. The system 400 includes a biomass dissociation plant 410 at the source of the biomass waste 402, such as a burnt down forest. The biomass waste dissociation plant performs biomass dissociation to generate various species of hydrogen fuel including low density hydrogen 412 as described in the copending U.S. Patent Application entitled "Carbon-Based Durable Goods and Renewable Fuel from Biomass Dissociation," (Attorney Docket No. 69545-9002.US00), the entire contents of which are incorporated by reference. Also, the

biomass dissociation to generate various species of hydrogen is further described with respect to Figures 5 and 6 below.

[0031] The low density hydrogen fuel (e.g., gaseous hydrogen) 412 is self-transported to a low-to-high density hydrogen fuel respeciation system 420 at a higher elevation location. The specific reactions for respeciating the low density hydrogen fuel to obtain high density hydrogen carrier 422 is described further below.

[0032] The high density hydrogen carrier fuel (e.g., gaseous hydrogen) 422 is delivered to a high-to-low density hydrogen fuel respeciation system 430 at a lower elevation location. The specific reactions for respeciating the high density hydrogen carrier fuel to obtain low density hydrogen fuel is described further below.

[0033] The system can include additional numbers of low-to-high density hydrogen fuel respeciation systems and high-to-low density hydrogen fuel respeciation systems as needed to deliver the renewable fuel to a desired target location. For example, the system 400 in Figure 4 is shown in include a second low-to-high density hydrogen fuel respeciation system 440 and a second high-to-low density hydrogen fuel respeciation system 450 for illustrative purposes only.

[0034] For the example shown in Figure 4, the high-to-low density hydrogen fuel respeciation system 430 respeciates the high density hydrogen carrier fuel to obtain low density hydrogen fuel 432, which is self-transported to the second low-to-high density hydrogen fuel respeciation system 440 at the higher elevation. The second low-to-high density hydrogen fuel respeciation system 440 respeciates the low density hydrogen fuel to obtain high density hydrogen carrier fuel 442, which is delivered to the second high-to-low density hydrogen fuel respeciation system 450.

[0035] The system 400 can be implemented at a coastal area where there are several peaks and valleys. Also, the system 400 can be implemented in metropolitan locations where there are several tall buildings. For examples, hydrogen can be produced at the base of one building and deliver to the top of the building. Energy conversion can be performed at the top of the building to respeciate the fuel to generate water and deliver the generated water to the bottom of the building. Also, at the top of the building, the hydrogen fuel can be converted to hydrocarbon, alcohol or ammonia and have it delivered to a bottom of another building as an energy conversion step. The respeciation and transport processes can continues from one building to

another or from a valley to a peak and from the peak to another valley until the fuel is delivered to a target location.

[0036] The overall energy for the transportation process can be favorable due to the self-transportable nature of the low density hydrogen fuel and the self-generated pressure and/or kinetic energy of the high density hydrogen carrier fuel. Also, the carbon and/or hydrogen donors used in the respeciation processes can be harvested and recycled from industrial processes (e.g., CO_2 from fossil fuel exhausts).

Biomass Waste Dissociation

[0037] Figure 5 shows a process flow diagram of a process 500 for a rapid conversion of carbon, hydrogen and oxygen containing biomass wastes into useful renewable sources of carbon and hydrogen that can be used to produce carbon-based durable goods and renewable fuel. The process 500 is analogous to process 110 in Figure 1 above.

[0038] A system (e.g., a biomass dissociation system 600 below) can subdivide the biomass waste into feedstock materials such as various cellulosic materials and lignocellulosic tissues (510). The subdivided feedstock materials can be compacted to remove air and moisture (520). The compacted biomass waste feedstock can be heated to release various useful renewable sources of carbon and/or hydrogen including hydrocarbons, alcohols, ammonium, and oxides of carbon (530). Also, the moisture content of the overall reaction environment can be controlled based on the desired renewable source of carbon and/or hydrogen (540). To control the moisture content, the compacted biomass waste feedstock that has been completely dried and de-aired can be used as a desiccant, for example. The renewable sources of hydrogen and carbon can be used to generate renewable fuel and/or carbon-based durable goods (550)

[0039] For example, as shown in Equation 1, biomass wastes can be heated sufficiently in an anaerobic environment to release desirable gases, carbon, and solid residues such as mineral oxides and other compounds. The anaerobic process for oxides of carbon and co-production of hydrogen and/or hydrocarbons from biomass wastes summarized in Equation 1 is not balanced for any particular type, amount, or ratio of lignin, cellulose, or other biomass feedstock.

$$C_xH_yO_z + HEAT \rightarrow CH_4 + H_2 + CO_2 + CO \qquad \text{Equation 1}$$

[0040] Using the process described in Equation 1, virtually any organic material can be converted in large part to hydrocarbon fuel, such as methane (CH_4) for distribution and storage in the existing natural gas infrastructure. Equation 2 below illustrates a general summary of the overall reactions for production of methane from typical biomass wastes such as glucose, lignin, and cellulosic feedstocks.

$$C_6H_{12}O_6 + HEAT \rightarrow 3CH_4 + 3CO_2 \qquad \text{Equation 2}$$

[0041] In some implementations, the biomass dissociation reaction can produce alcohols, such as methanol as a readily storable and transportable liquid fuel and chemical precursor. Methanol or "wood alcohol" can be extracted by heating lignocellulosic wastes through partial combustion or by anaerobic heating processes. Equations 3 and 4 summarize the output of methanol that can be achieved by selection of different anaerobic operating temperatures, pressures, and catalysts.

$$C_6H_{12}O_6 + HEAT \rightarrow 6CO + 6\ H_2 \qquad \text{Equation 3}$$

$$6CO + 6\ H_2 \rightarrow 3CH_3OH + 3CO \qquad \text{Equation 4}$$

[0042] At higher feed rates and/or lower heat release rates in a reactor, the charge does not reach the higher temperatures that produce the gases shown in Equation 1, and thus the dissociation process produces alcohol, such as methanol. Carbon monoxide can be separated from methanol by cooling the methanol vapors to form liquid methanol and to utilize the separated carbon monoxide to fuel a combustible engine, to release heat through combustion by a burner assembly, and to form hydrogen by a reaction with water as summarized in Equation 5. Hydrogen produced by the reaction summarized in Equation 5 may be used to produce methanol as shown in Equation 4, to improve operation of an engine, to improve the yield of methane and/or ethane in the biomass conversion and/or as a heating fuel.

$$CO + H_2O \rightarrow H_2 + CO_2 \qquad \text{Equation 5}$$

[0043] Figure 6 shows an exemplary system 600 for dissociating biomass waste 602 into hydrogen and carbon carrying intermediaries. The system 600 is analogous to the system 410 in Figure 4 above. The system 600 includes a biomass waste intake component, such as a hopper 610 that receives the biomass waste in raw form and breaks down (e.g., chips, chops, grinds, etc.) the raw material into subdivided feedstock

614, such as various cellulosic and lignocellulosic materials. The hopper 610 can include a heating mechanism, such as a heat exchanger 612 to pre-heat the subdivided feedstock. The heat exchanger can recapture and recycle waste heat from an external heat source (e.g., engine exhaust and/or renewable heat, such as wind, solar, etc.) or from the reactor 620.

[0044] The subdivided (and in some implementations, pre-heated) feedstock is forwarded to a reactor 620 to dissociate the biomass waste feedstock into useful renewable sources of carbon and hydrogen, such as various hydrocarbons, alcohols, ammonia, and oxides of carbon. The reactor can include a drying mechanism 622 to expel moisture and air from the feedstock. The drying mechanism 622 can include an extruding device to physically 'squeeze out' the moisture and air from the feedstock. Examples of the extruding device include a helical screw conveyer and a ram piston conveyer. Also, the drying mechanism 622 can include one or more heating mechanisms, such as heat exchangers that capture heat generated by the reactor 620 and recycle the captured heat to dry the feedstock. The heat exchangers can also recapture and recycle waste heat from an external heat source (e.g., engine exhaust and/or renewable heat, such as wind, solar, etc.)

[0045] The reactor 620 can also include a heating mechanism 624 for generating adequate heat used in an anaerobic reaction to dissociate the biomass waste feedstock into the useful renewable sources of carbon and hydrogen 616, such as hydrocarbons, alcohols, ammonia and oxides of carbon. The generated useful renewable sources of carbon and hydrogen 616 can be forwarded to a storage and/or transport mechanism 630 to be used in additional reaction to generate renewable fuel and/or carbon-based durable goods in respective reaction systems 640 and 650. Moreover, the storage and/or transport mechanism 630 allows for efficient transport of the useful renewable sources of carbon and hydrogen 616 to remote locations for further processing.

[0046] The reactor 620 can be configured to increase thermal efficiency of the biomass waste conversion process while reducing or eliminating carbon dioxide formation. For example, the reactor 620 can include mechanisms to perform various countercurrent drying (e.g., recycling heat) and elimination of air, moisture, and other

oxygen donors prior to extraction of carbon, hydrocarbons such as methane, and/or hydrogen.

Respeciation of Low Density hydrogen Fuel to Generate High Density hydrogen Carrier

[0047] The low density hydrogen fuel can be respeciated to generate high density hydrogen Carrier, such as hydrocarbons, alcohols and ammonia as described in the copending U.S. Patent Application entitled "CARBON RECYCLING AND REINVESTMENT USING THERMOCHEMICAL REGENERATION," (Attorney Docket No. 69545-9004.US00), the entire contents of which is incorporated by reference. For example, Figure 7 is a process flow diagram of a process 700 for generating high density hydrogen carriers by reinvesting, repurposing or recycling carbon dioxide harvested from waste generated by industrial processes to react with low density hydrogen from biomass waste dissociation. A system (e.g., system 800 below) harvests a carbon donor from industrial processes (710). The carbon donor, such as carbon dioxide or carbon monoxide used in the thermochemical regeneration described here can be harvested from readily available sources of CO_2, such as from central power plants, coking, and calcining operations that burn hydrocarbons, breweries, and bakeries. The system obtains hydrogen from biomass waste dissociation (720). The harvested CO_2 can be used to produce liquid feedstocks for production of chemicals and or fuels by reacting with the biomass waste produced low density hydrogen (730). For example, the methanol fuel produced in the described thermochemical regeneration of CO_2 with hydrogen can be used to power gasoline and diesel engines adapted to burn methanol in a non-polluting manner. U.S. Patent Nos. 6,155,212 and 6,756,140 describe apparatus and techniques for adapting gasoline and diesel engines to burn methanol, the entire contents of which are incorporated by reference.

[0048] Equations 6 and 7 below illustrate hydrogen and carbon repurposing or recycling via methanol production in which biomass produced hydrogen is reacted with industrial process produced carbon monoxide (CO) and CO_2 respectively.

$$CO + 2\,H_2 \rightarrow CH_3OH\ (\Delta H = -21.66\ \text{Kcal/g-mol}) \qquad \text{Equation 6}$$

$$CO_2 + 3\,H_2 \rightarrow CH_3OH + H_2O\ (\Delta H = -11.83\ \text{Kcal/g-mol}) \qquad \text{Equation 7}$$

[0049] The described thermochemical regeneration reactions that recycle or repurpose hydrogen, CO and CO_2 provide a bridge technology for increasing the

financial return on past investments in equipment by utilizing existing transportation engines and storage tanks to enable thermochemical regeneration reactions to produce hydrogen-characterized fuels for achieving longer engine life and greater fuel efficiency along with greatly reduced emissions of carbon dioxide, hydrocarbons, oxides of nitrogen and particulates.

[0050] The methanol synthesis process summarized in Equations 6 and 7 may be implemented by various steps including catalytic synthesis at 95 to 100 atmospheres pressure and 500°F (260°C) (740). Catalysts for the processes of Equations 6 and 7 can include copper-zinc-oxide and deposited sinter mixture of copper and copper-zinc oxide at various process synthesis conditions including about 260°C (500°F) and 1500 psi to produce methanol or methanol and water as shown. Alternatively, dimethyl ether (DME) or ethylene or propylene may be produced depending upon the pressure, temperature and catalysts chosen.

[0051] Methanol produce by the thermochemical regeneration reactions as described above (see Equations 6 and 7) can be inexpensive, storable and transportable. In one implementation of the carbon-neutral hydrogen storage operation, methanol is synthesized from sources that ordinarily source emissions of CO_2. Such CO_2 can be captured from ethanol plants, bakeries, breweries, Portland cement plants, and fossil burning power plants and/or by atmospheric "scrubbing" to extract up to about three molecules of carbon dioxide from ten thousand molecules of air.

[0052] Similar to ethanol, methanol can be blended with gasoline up to 20% in conventional engines and 85% in flex fuel vehicles with no modifications to the vehicle or existing transportation fuel infrastructure. For years, methanol, with an octane rating of 100, has been used as a racing fuel for high-performance cars and dragsters.

[0053] Primary use of alcohols such as methanol as an energy carrier is economically and energetically favorable. For example, one liter of methanol at ambient temperature contains more hydrogen than one liter of liquid hydrogen that must be maintained in storage at –421°F.

[0054] Figure 8 is a block diagram showing an exemplary system 800 for repurposing or recycling CO_2 harvested from industrial processes as waste to create renewable fuel by reacting with biomass produced hydrogen. The system 800 receives

the low density hydrogen fuel 412, 432 from the biomass dissociation system 410 or the high-to-low density hydrogen fuel respeciation system 430, 450. The heat used to dissociate the biomass waste can include waste heat from engine exhausts, engine cooling system etc. that otherwise would be released to the environment. Also, one or more of renewable energy sources, such as wind, solar, etc. can be used to generate the heat.

[0055] The received low specific energy or low density hydrogen (from dissociation of hydrocarbons, for example) is captured and forwarded to hydrogen-dense fuel generating reactor 820, which includes a heating mechanism 824. The hydrogen-dense fuel generating reactor 820 also receives carbon donors, such as CO_2 832 harvested from industrial processes (e.g., exhaust gases from fossil fuel combustion or air). The hydrogen-dense fuel generating reactor 820 causes the low specific energy hydrogen to react with the harvested carbon donors, such as CO_2 832 to generate hydrogen-dense fuel 850, such as methanol. The carbon donor 832 can be obtained from air or industrial waste 830, including stack smoke, waste stream of a polymer plant, etc.

[0056] The system 800 can include a catalyst reaction zone 840 to receive one or more catalysts that enhances the generation of the hydrogen-dense fuel mixture. Examples of catalysts are described above.

[0057] The generated hydrogen-dense fuel mixture 850 is storable and transportable. Because the hydrogen-dense fuel mixture 850 carry hydrogen fuel in a transportable form, the hydrogen-dense fuel mixture operates as a vehicle for carry energy to a desired destination. The hydrogen-dense fuel 850 mixture can be self-transported to a high-to-low density hydrogen fuel respeciation system (e.g., 430 or 450).

[0058] In some implementations, pressurized hydrogen or pressurized and heated hydrogen can be added to pressurize the products of reacting hydrogen and CO to form a desired compound such as DME fuel or methanol as shown in Equation 8.

$$CO + H_2 + H_2 \rightarrow CH_3OH \qquad \text{Equation 8}$$

[0059] Liquid fuel such as methanol provided by the processes summarized in Equation 8 can readily be stored, transported, metered and dispensed by equipment and systems typically utilized for diesel, gasoline, and other alcohol fuels.

[0060] Repurposing or recycling of oxides of carbon such as carbon dioxide or carbon monoxide from air-burning processes generally poses the problem of separation or accommodation of nitrogen contamination. Another process variation for preparation of values from mixtures of reactive ionic species is provided by arc, corona, microwave, or radiative ionization. Mixtures of carbon monoxide and hydrogen and such nitrogen can be reacted to produce CH_3OH and NH_3 as shown in Equation 9.

$$CO + 5H_2 + N_2 + ENERGY \rightarrow CH_3OH + 2NH_3 \qquad \text{Equation 9}$$

[0061] Ammonia (NH_3) produced by this or other reactions that utilize hydrogen produced by the biomass dissociation system 410 or the high-to-low density hydrogen fuel generation system 430 and 450 can be safely stored and conveyed. This provides compact storage and may serve as a precursor of hydrogen. Ammonia can be stored in various ways including as a pressurized liquid, a salt such as ammonium chloride, or in activated media such as carbon and pressurization can be accomplished by heat addition. Decomposition of ammonia as it passes a catalyst may be utilized to pressurize the N_2 and hydrogen products including pressurization of carbon monoxide and hydrogen that may be co-produced from methanol or wet methanol.

Respeciation of High Density hydrogen Carrier to Generate Low Density hydrogen Fuel

[0062] The high density hydrogen carriers, such as hydrocarbons (e.g., methane) and alcohols (e.g., methanol) received from the low-to-high density hydrogen carrier respeciation systems 420 and 440, can be dissociated to produce low density hydrogen fuel and carbon for a multitude of "specialized carbon" applications ranging from diamond plating and semiconductors to composite structures that are stronger than steel and lighter than aluminum. Figure 9 is a process flow diagram of a process 900 for dissociating hydrocarbons and alcohols to obtain carbon and hydrogen. A reactor (e.g., reactor 1000) can receive hydrocarbons and alcohols dissociated from biomass waste (910). The reactor can apply adequate heat and pressure to the hydrocarbons and alcohols to dissociate carbon from hydrogen (920). Equation 10 illustrates a general process of dissociating hydrocarbon fuel to obtain hydrogen and carbon.

Equation 11 shows a specific reaction for dissociation of methane into carbon and hydrogen.

$C_xH_y + HEAT_4 \rightarrow XC + 0.5Y\ H_2$ Equation 10

$CH4 + \blacktriangle H_{298K} \rightarrow 2\ H_2 + C\ (\blacktriangle H_{298K} = 79.4kJ/mol)$ Equation 11

[0063] Equation 12 shows a reaction for dissociating cellulose and fuel alcohols that contain oxygen by anaerobic decomposition to obtain carbon, carbon monoxide and hydrogen.

$C_2H_5OH + HEAT \rightarrow C + CO + 3\ H_2$ Equation 12

[0064] The carbon monoxide can be reacted in an anaerobic dissociation shown in Equation 13 to increase the yield of hydrogen from feedstocks that contain carbon, hydrogen and oxygen:

$CO + H_2O \rightarrow CO_2 + H_2 + HEAT$ Equation 13

[0065] Total energy value of hydrogen and carbon monoxide produced in the endothermic reactions can be 15 to 20 % greater than that of methane used to source the carbon monoxide and hydrogen as shown in Equation 13. Also, to increase the thermochemical efficiency of the reactions, the heat used to dissociate the hydrocarbons can be harvested and recycled from engine exhaust (e.g., waste heat) or a renewable energy source, such as solar or wind energy.

[0066] The carbon dissociated in the processes can be collected for use in the production of carbon-based durable goods (930). For example, the carbon extracted from biomass waste-produced hydrocarbons and alcohols can be used to generate carbon products including activated carbon, fibrous carbon, diamond-like coatings, graphitic components, and carbon black. These forms of carbon products can be used to manufacture durable goods, such as better equipment to harness solar, wind, moving water, and geothermal resources along with transportation components that are stronger than steel and lighter than aluminum. Recycling or repurposing carbon to produce equipment that harnesses renewable resources provides many times more energy than burning such carbon one time. Also, the hydrogen co-produced with carbon from the dissociation of hydrocarbons and alcohols can be collected for self-transportation to a higher elevation location (940).

[0067] Figure 10 is a block diagram of a system 1000 for respeciating high density hydrogen carrier fuel to generate low density hydrogen fuel. In addition, the system 1000 can generate carbon-based durable goods from carbons co-produced with the low density hydrogen fuel. The system 1000 includes a reactor 1010 that receives the high density hydrogen carriers, such as hydrocarbons and alcohols 1016 from the low-to-high density hydrogen carrier fuel respeciation system 420, 440. The reactor 1010 can include a heating mechanism 1012, such as heat exchangers for applying the heat used in the anaerobic reactions of Equations 10-12. The low density hydrogen fuel 1019 generated from dissociation of the high density hydrogen carriers, such as hydrocarbons and alcohols 1016 can be self-transported to a higher elevation location as needed (e.g., to High-to-Low Density H_2 Fuel Respeciation System 430, 450). Also, the carbon 1017 dissociated from the hydrocarbons and alcohols can be used in production of durable goods 1030.

[0068] The reactor 1010 can also include a drying mechanism 1014 for de-hydrating the alcohols to create DME 1018, which can be used to produce ethylene or propylene 1035. Also, the heating mechanism 1012 can be used to dehydrate the alcohols. The produced ethylene or propylene can be used to generate polymers for producing various plastics and other carbon-based durable goods 1030.

[0069] In some implementations, hydrocarbons received from a higher elevation location can be reacted with a carbon donor, such as CO_2 harvested from industrial processes. It can be advantageous to utilize a renewable energy resource (e.g., methane from biomass) to provide carbon for processing carbon dioxide into carbon monoxide as shown in Equation 14.

$$CH_4 + CO_2 + \text{ENERGY} \rightarrow 2CO + 2\,H_2 \qquad \text{Equation 14}$$

[0070] The heat used in the reaction of the harvested CO_2 with the biomass waste generated carbon donor can include waste heat from engine exhausts, engine cooling system etc. that otherwise would be released to the environment. Also, one or more of renewable energy sources, such as wind, solar, etc. can be used to generate the heat.

[0071] Higher pressure hydrogen can be used to pressurize the products of hydrocarbon dissociation, such as carbon monoxide and hydrogen. Also, the higher pressure hydrogen can be produced by other energy induced dissociations including

electrolysis of anaerobically developed acids and liquors from organic digestion processes and from water as generally shown in Equations 15 and 16.

$$C_2H_4O_2 + 2H_2O + \text{ENERGY} \rightarrow 2CO_2 + 4H_2 \qquad \text{Equation 15}$$

$$H_2O + \text{ENERGY} \rightarrow 0.5O_2 + H_2 \qquad \text{Equation 16}$$

[0072] While this specification contains many specifics, these should not be construed as limitations on the scope of any invention or of what may be claimed, but rather as descriptions of features that may be specific to particular embodiments of particular inventions. Certain features that are described in this specification in the context of separate embodiments can also be implemented in combination in a single embodiment. Conversely, various features that are described in the context of a single embodiment can also be implemented in multiple embodiments separately or in any suitable subcombination. Moreover, although features may be described above as acting in certain combinations and even initially claimed as such, one or more features from a claimed combination can in some cases be excised from the combination, and the claimed combination may be directed to a subcombination or variation of a subcombination.

[0073] Similarly, while operations are depicted in the drawings in a particular order, this should not be understood as requiring that such operations be performed in the particular order shown or in sequential order, or that all illustrated operations be performed, to achieve desirable results. In certain circumstances, multitasking and parallel processing may be advantageous. Moreover, the separation of various system components in the embodiments described above should not be understood as requiring such separation in all embodiments.

[0074] Only a few implementations and examples are described and other implementations, enhancements and variations can be made based on what is described and illustrated in this application.

[0075] To the extent not previously incorporated herein by reference, the present application incorporates by reference in their entirety the subject matter of each of the following materials: Attorney Docket No. 69545-8601.US00, filed on February 14, 2011 and titled CHEMICAL PROCESSES AND REACTORS FOR EFFICIENTLY PRODUCING HYDROGEN FUELS AND STRUCTURAL MATERIALS, AND

ASSOCIATED SYSTEMS AND METHODS; Attorney Docket No. 69545-8602.US00, filed on February 14, 2011 and titled REACTOR VESSELS WITH TRANSMISSIVE SURFACES FOR PRODUCING HYDROGEN-BASED FUELS AND STRUCTURAL ELEMENTS, AND ASSOCIATED SYSTEMS AND METHODS; Attorney Docket No. 69545-8603.US00, filed on February 14, 2011 and titled CHEMICAL REACTORS WITH RE-RADIATING SURFACES AND ASSOCIATED SYSTEMS AND METHODS; Attorney Docket No. 69545-8604.US00, filed on February 14, 2011 and titled THERMAL TRANSFER DEVICE AND ASSOCIATED SYSTEMS AND METHODS; Attorney Docket No. 69545-8605.US00, filed on February 14, 2011 and titled CHEMICAL REACTORS WITH ANNULARLY POSITIONED DELIVERY AND REMOVAL DEVICES, AND ASSOCIATED SYSTEMS AND METHODS; Attorney Docket No. 69545-8606.US00, filed on February 14, 2011 and titled REACTORS FOR CONDUCTING THERMOCHEMICAL PROCESSES WITH SOLAR HEAT INPUT, AND ASSOCIATED SYSTEMS AND METHODS; Attorney Docket No. 69545-8608.US00, filed on February 14, 2011 and titled INDUCTION FOR THERMOCHEMICAL PROCESS, AND ASSOCIATED SYSTEMS AND METHODS; Attorney Docket No. 69545-8611.US00, filed on February 14, 2011 and titled COUPLED THERMOCHEMICAL REACTORS AND ENGINES, AND ASSOCIATED SYSTEMS AND METHODS; U.S. Patent Application No. 61/385,508, filed on September 22, 2010 and titled REDUCING AND HARVESTING DRAG ENERGY ON MOBILE ENGINES USING THERMAL CHEMICAL REGENERATION; Attorney Docket No. 69545-8616.US00, filed on February 14, 2011 and titled REACTOR VESSELS WITH PRESSURE AND HEAT TRANSFER FEATURES FOR PRODUCING HYDROGEN-BASED FUELS AND STRUCTURAL ELEMENTS, AND ASSOCIATED SYSTEMS AND METHODS; U.S. Patent Application No. 61/237,419, filed on August 27, 2009 and titled CARBON SEQUESTRATION; Attorney Docket No. 69545-9002.US00, filed on February 14, 2011 and titled SYSTEM FOR PROCESSING BIOMASS INTO HYDROCARBONS, ALCOHOL VAPORS, HYDROGEN, CARBON, ETC.; Attorney Docket No. 69545-9004.US00, filed on February 14, 2011 and titled CARBON RECYCLING AND REINVESTMENT USING THERMOCHEMICAL REGENERATION; Attorney Docket No. 69545-9006.US00, filed on February 14, 2011 and titled OXYGENATED FUEL; U.S. Patent Application No. 61/237,425, filed on August 27, 2009 and titled OXYGENATED FUEL PRODUCTION; and Attorney Docket No. 69545-

9102.US00, filed on February 14, 2011 and titled MULTI-PURPOSE RENEWABLE FUEL FOR ISOLATING CONTAMINANTS AND STORING ENERGY.

CLAIMS

I/We claim:

1. A method of transporting renewable fuel, the method comprising:

generating low density hydrogen fuel from biomass dissociation at a first location of a low elevation;

self-transporting the low density hydrogen fuel in a pipeline to a second location at a higher elevation than the first location, wherein the low density hydrogen fuel travels from the first location to the second location without adding energy or pressure;

generating a high density hydrogen carrier at the second location of higher elevation by reacting the low density hydrogen fuel with at least one of a carbon donor, a nitrogen donor and an oxygen donor; and

delivering the high density hydrogen carrier to a third location of a lower elevation than the second location while providing pressure or kinetic energy.

2. The method of claim 1, wherein generating the low density hydrogen fuel comprises applying waste heat recovered from an external energy source or heat generated from a renewable energy source.

3. The method of claim 1, wherein the high density hydrogen carrier comprises at least one of hydrocarbon, alcohol and ammonia.

4. The method of claim 3, wherein the hydrocarbon comprises at least one of methane and ethane; and

wherein the alcohol comprises at least one of methanol and ethanol.

5. The method of claim 1, wherein the carbon donor comprises carbon dioxide and the hydrogen donor comprises water.

6. The method of claim 1, further comprising:

dissolving a hazardous contaminant in the high density hydrogen carrier to generate a liquid mixture that isolates the hazardous contaminant from an environment.

7. The method of claim 6, wherein the liquid mixture controls a vapor pressure or availability of the vapor pressure.

8. The method of claim 6, further comprising:

applying heat to the liquid mixture to generate oxygenated fuel mixture with a ratio of hydrogen to carbon that is higher than the high density hydrogen carrier.

9. The method of claim 8, further comprising:

transporting in a pipeline the hydrogen generated from the liquid mixture to a fourth location at a higher elevation than the third location without adding energy or pressure.

10. The method of claim 1, further comprising:

applying heat to the high density hydrogen carrier to generate oxygenated fuel with a ratio of hydrogen to carbon that is higher than the high density hydrogen carrier.

11. The method of claim 1, further comprising:

transporting in a pipeline the hydrogen generated from the high density hydrogen carrier to a fourth location at a higher elevation than the third location without adding energy or pressure.

12. The method of claim 1, wherein the at least one of a carbon donor, a nitrogen donor and an oxygen donor are harvested from industrial waste.

13. A pipeline system of transporting renewable fuel, the system comprising:

a biomass conversion plant at a first location of a low elevation to generate low density hydrogen fuel from biomass dissociation;

a first pipeline connecting the biomass conversion plant to a second location of a higher elevation than the first location, wherein the low density hydrogen fuel travels within the pipeline from the first location to the second location without added energy of pressure;

a thermochemical reactor connected to the second location of the higher elevation to generate a high density hydrogen carrier, wherein the thermochemical reactor reacts the low density hydrogen fuel with at least one of a carbon donor, a nitrogen donor and an oxygen donor; and

a second pipeline connecting the thermochemical reactor to a third location of a lower elevation than the second location, wherein the high density hydrogen carrier is delivered to the third location with at least one of pressure or kinetic energy generated by the high density hydrogen carrier.

14. The pipeline system of claim 13, wherein the thermochemical reactor comprises a countercurrent heat exchanger to apply waste heat recovered from an external energy source or heat generated from a renewable energy source.

15. The pipeline system of claim 13, wherein the high density hydrogen carrier comprises at least one of hydrocarbon, alcohol and ammonia.

16. The pipeline system of claim 15, wherein the hydrocarbon comprises at least one of methane and ethane; and

wherein the alcohol comprises at least one of methanol and ethanol.

17. The pipeline system of claim 13, wherein the carbon donor comprises carbon dioxide and the hydrogen donor comprises water.

18. The pipeline system of claim 13, further comprising:

a contaminant recovery system connected to the thermochemical reactor, the contaminant recovery system configured to

harvest a hazardous contaminant; and

dissolve the harvested hazardous contaminant in the high density hydrogen carrier to generate a liquid mixture that isolates the hazardous contaminant from an environment.

19. The pipeline system of claim 18, wherein the liquid mixture controls a vapor pressure or availability of the vapor pressure.

20. The pipeline system of claim 18, wherein the liquid mixture is transported in the second pipeline to the third location using at least one of pressure and kinetic energy generated by the liquid mixture.

21. The pipeline system of claim 13, further comprising:

a second thermochemical reactor connected to the third location to dissociate the liquid mixture, using an anaerobic reaction, to generate an oxygenated fuel mixture with a ratio of hydrogen to carbon that is higher than the high density hydrogen carrier.

22. The pipeline system of claim 21, further comprising:

a second countercurrent heat exchanger connected to the second thermochemical reactor to apply heat to the liquid mixture to generate the oxygenated fuel mixture.

23. The pipeline system of claim 21, further comprising:

a third pipeline connecting the second thermochemical reactor at a fourth location of a higher elevation than the third location without adding energy or pressure.

24. The pipeline system of claim 13, wherein the at least one of carbon donor, nitrogen donor and the oxygen donor is harvested from an industrial process.

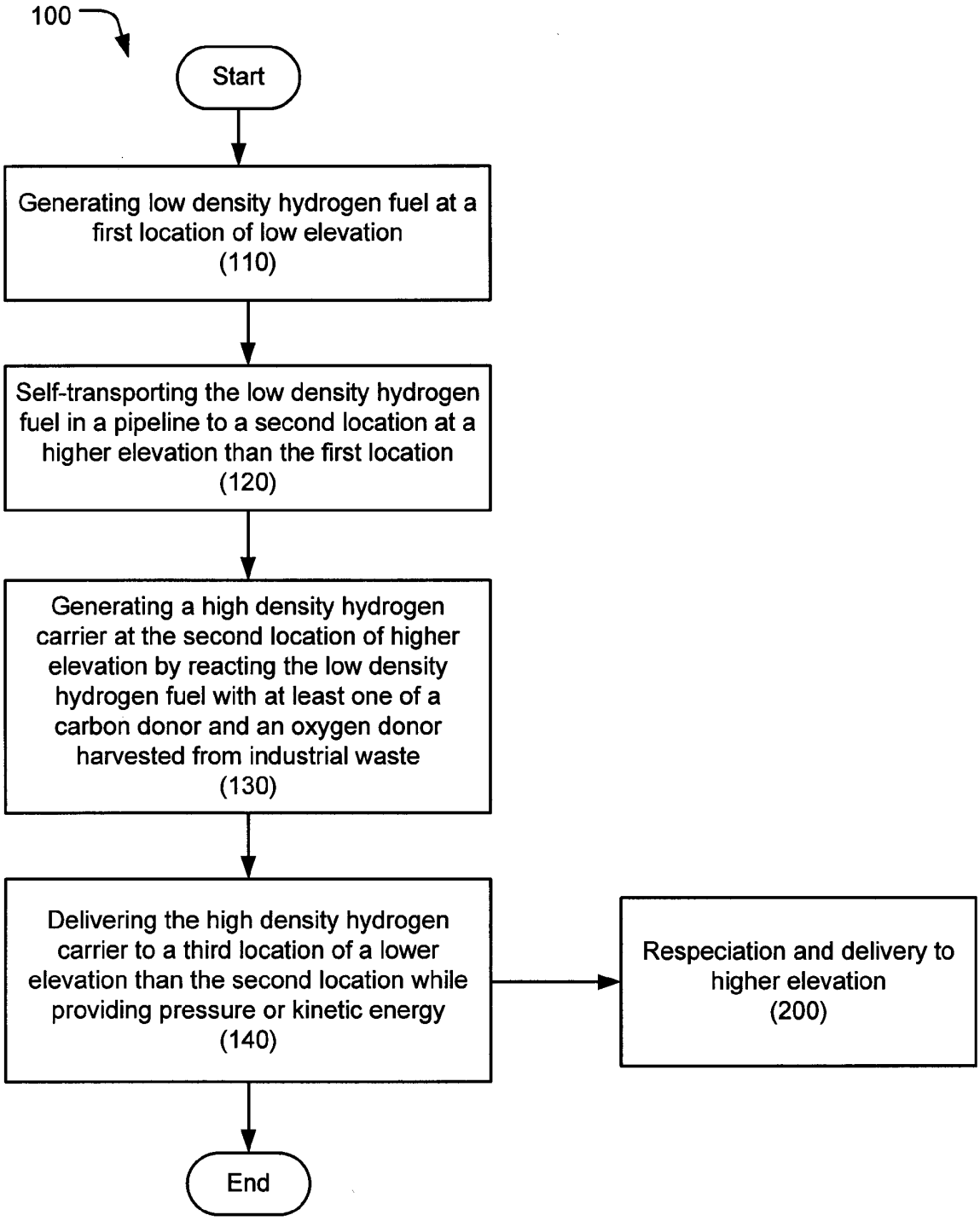
100
Start
Generating low density hydrogen fuel at a first location of low elevation (110)
Self-transporting the low density hydrogen fuel in a pipeline to a second location at a higher elevation than the first location (120)
Generating a high density hydrogen carrier at the second location of higher elevation by reacting the low density hydrogen fuel with at least one of a carbon donor and an oxygen donor harvested from industrial waste (130)
Delivering the high density hydrogen carrier to a third location of a lower elevation than the second location while providing pressure or kinetic energy (140)
Respeciation and delivery to higher elevation (200)
End

FIG. 1

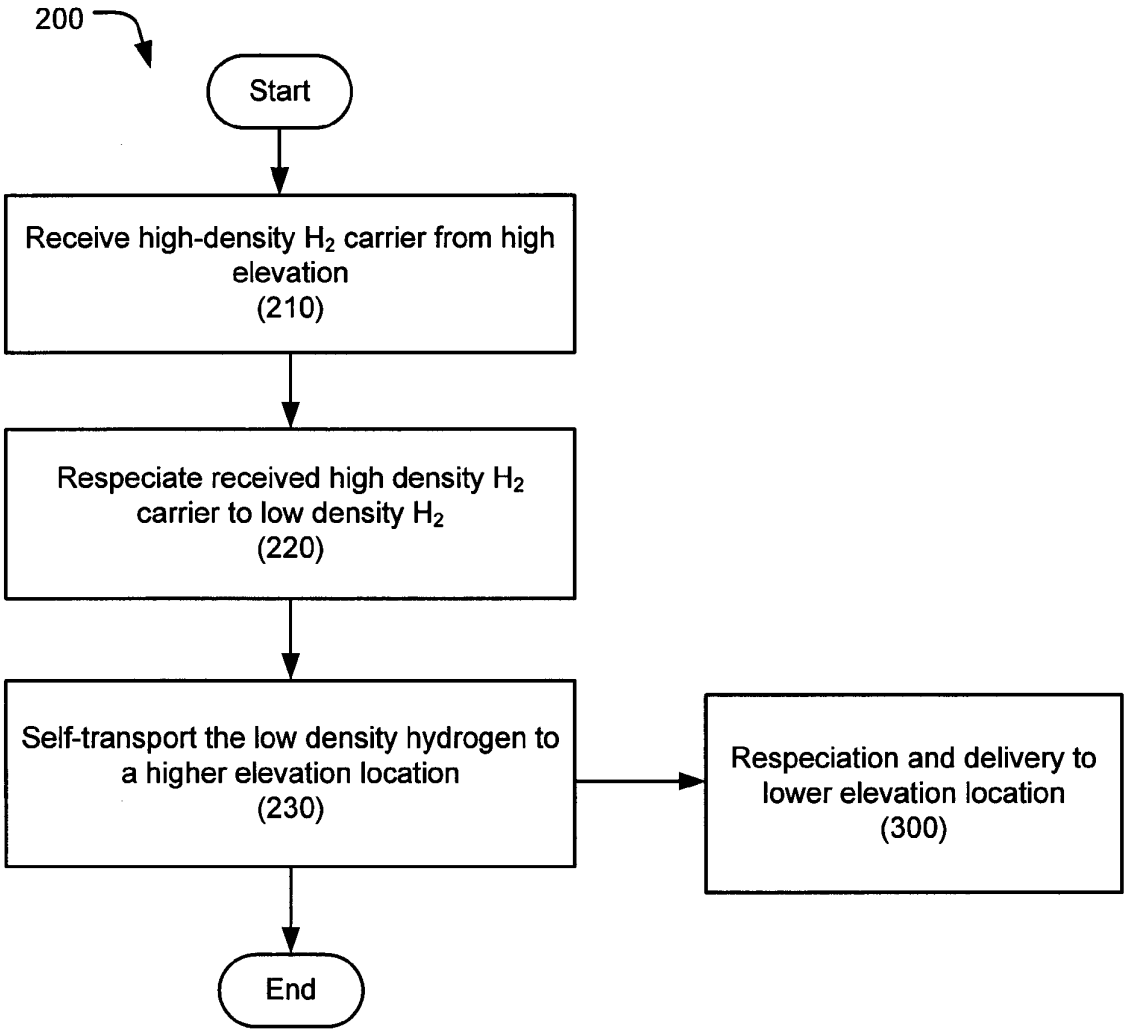
200
Start
Receive high-density H_2 carrier from high elevation (210)
Respeciate received high density H_2 carrier to low density H_2 (220)
Self-transport the low density hydrogen to a higher elevation location (230)
Respeciation and delivery to lower elevation location (300)
End

FIG. 2

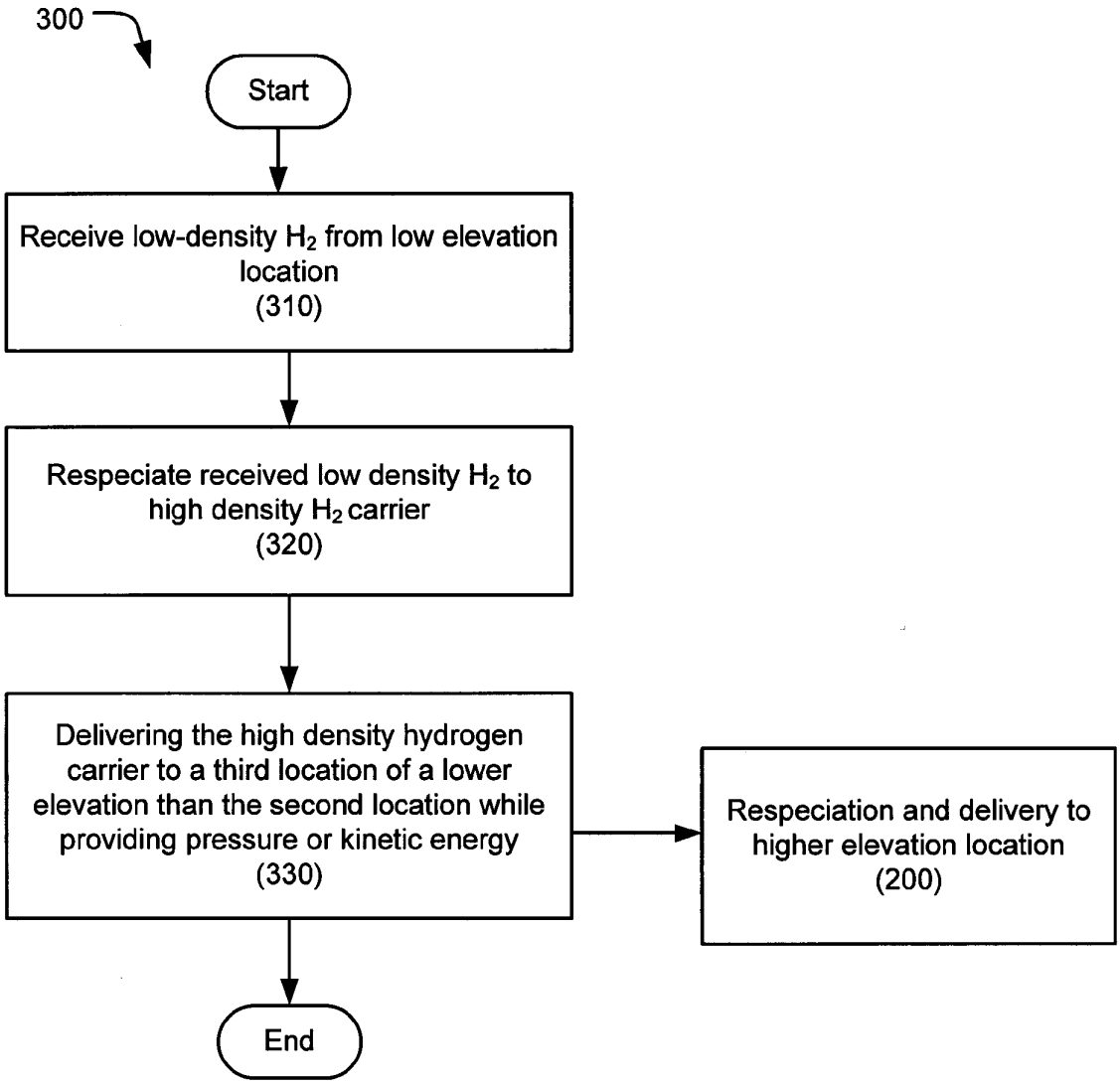
300
Start
Receive low-density H_2 from low elevation location (310)
Respeciate received low density H_2 to high density H_2 carrier (320)
Delivering the high density hydrogen carrier to a third location of a lower elevation than the second location while providing pressure or kinetic energy (330)
Respeciation and delivery to higher elevation location (200)
End

FIG. 3

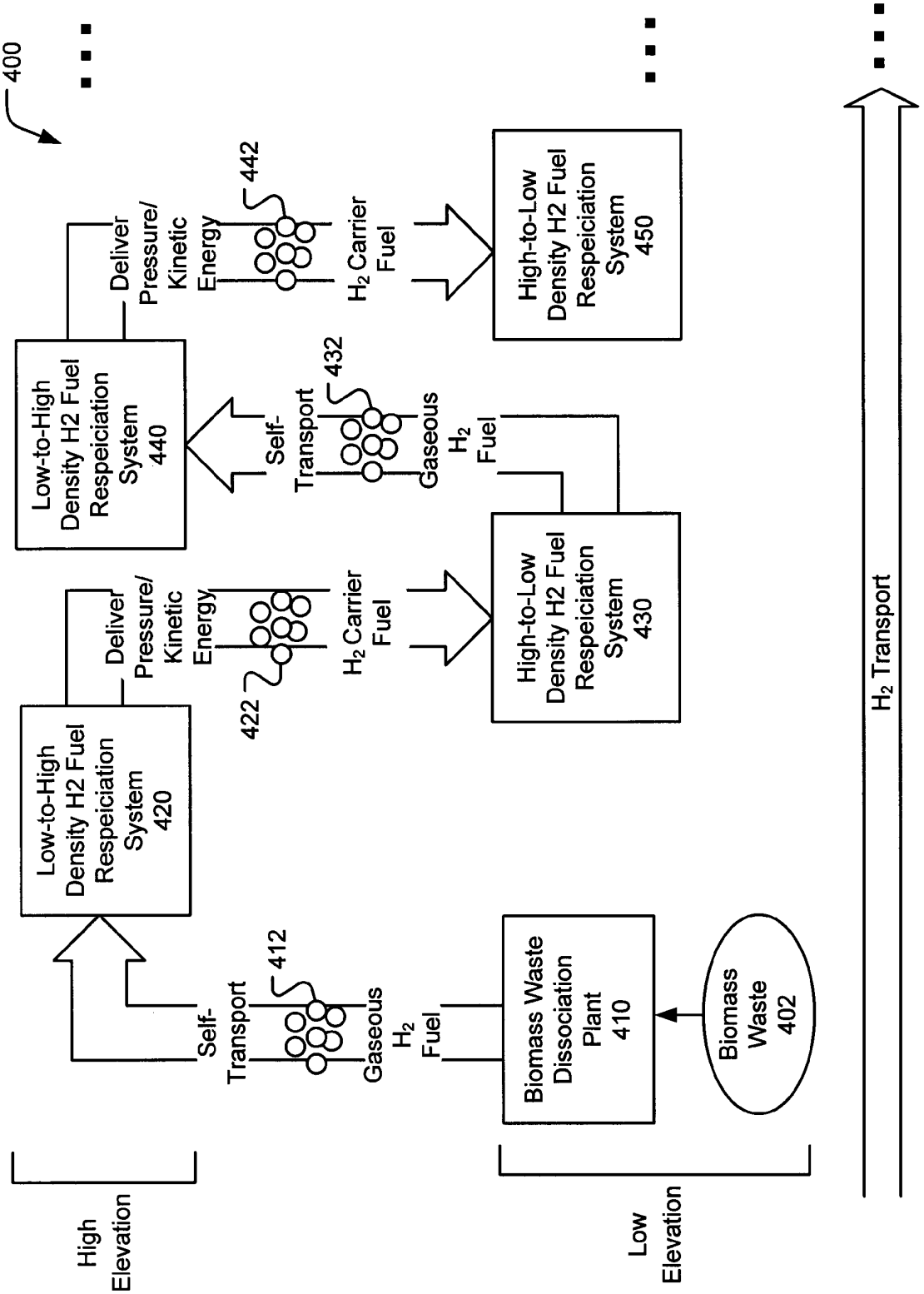
400
High Elevation
Low Elevation
Biomass Waste Dissociation Plant 410
Biomass Waste 402
Self-Transport
Gaseous H_2 Fuel
412
Low-to-High Density H2 Fuel Respeiciation System 420
Deliver Pressure/ Kinetic Energy
422
H_2 Carrier Fuel
High-to-Low Density H2 Fuel Respeiciation System 430
Self-Transport
Gaseous H_2 Fuel
432
Low-to-High Density H2 Fuel Respeiciation System 440
Deliver Pressure/ Kinetic Energy
442
H_2 Carrier Fuel
High-to-Low Density H2 Fuel Respeiciation System 450
H_2 Transport

FIG. 4

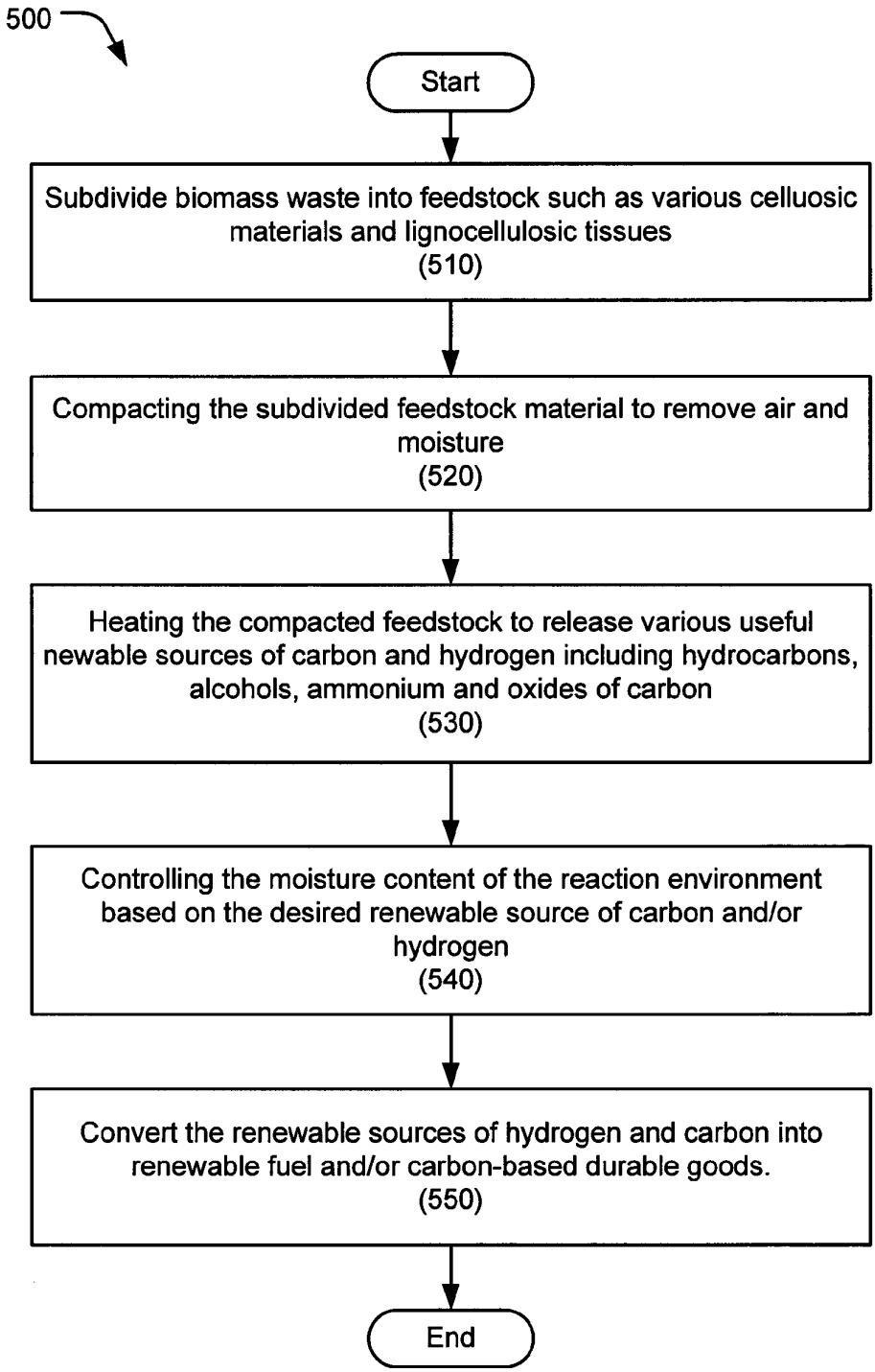
500
Start
Subdivide biomass waste into feedstock such as various celluosic materials and lignocellulosic tissues
(510)
Compacting the subdivided feedstock material to remove air and moisture
(520)
Heating the compacted feedstock to release various useful newable sources of carbon and hydrogen including hydrocarbons, alcohols, ammonium and oxides of carbon
(530)
Controlling the moisture content of the reaction environment based on the desired renewable source of carbon and/or hydrogen
(540)
Convert the renewable sources of hydrogen and carbon into renewable fuel and/or carbon-based durable goods.
(550)
End

FIG. 5

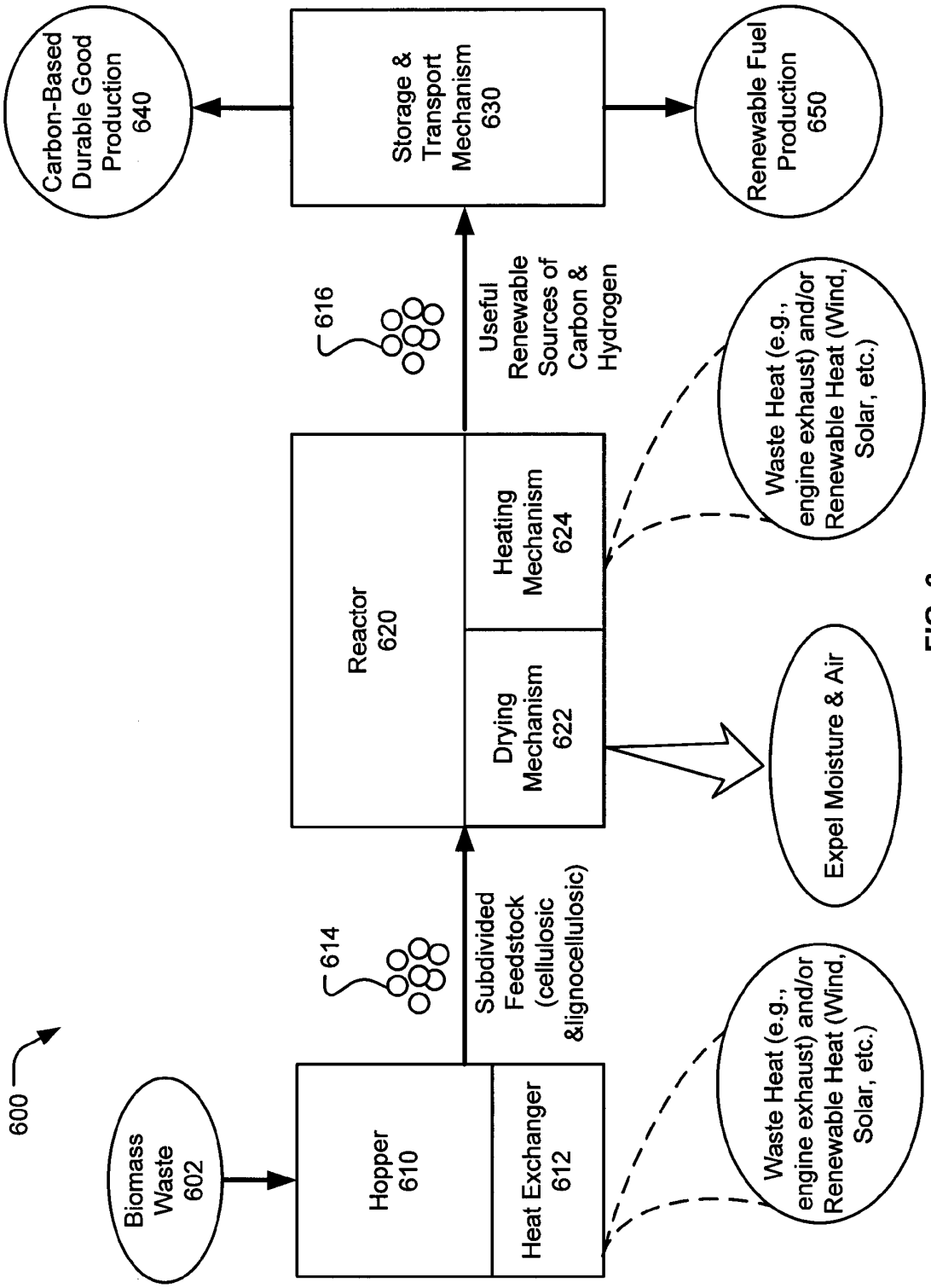
600
Biomass Waste 602
Hopper 610
Heat Exchanger 612
614
Subdivided Feedstock (cellulosic &lignocellulosic)
Reactor 620
Drying Mechanism 622
Heating Mechanism 624
616
Useful Renewable Sources of Carbon & Hydrogen
Storage & Transport Mechanism 630
Carbon-Based Durable Good Production 640
Renewable Fuel Production 650
Waste Heat (e.g., engine exhaust) and/or Renewable Heat (Wind, Solar, etc.)
Expel Moisture & Air
Waste Heat (e.g., engine exhaust) and/or Renewable Heat (Wind, Solar, etc.)

FIG. 6

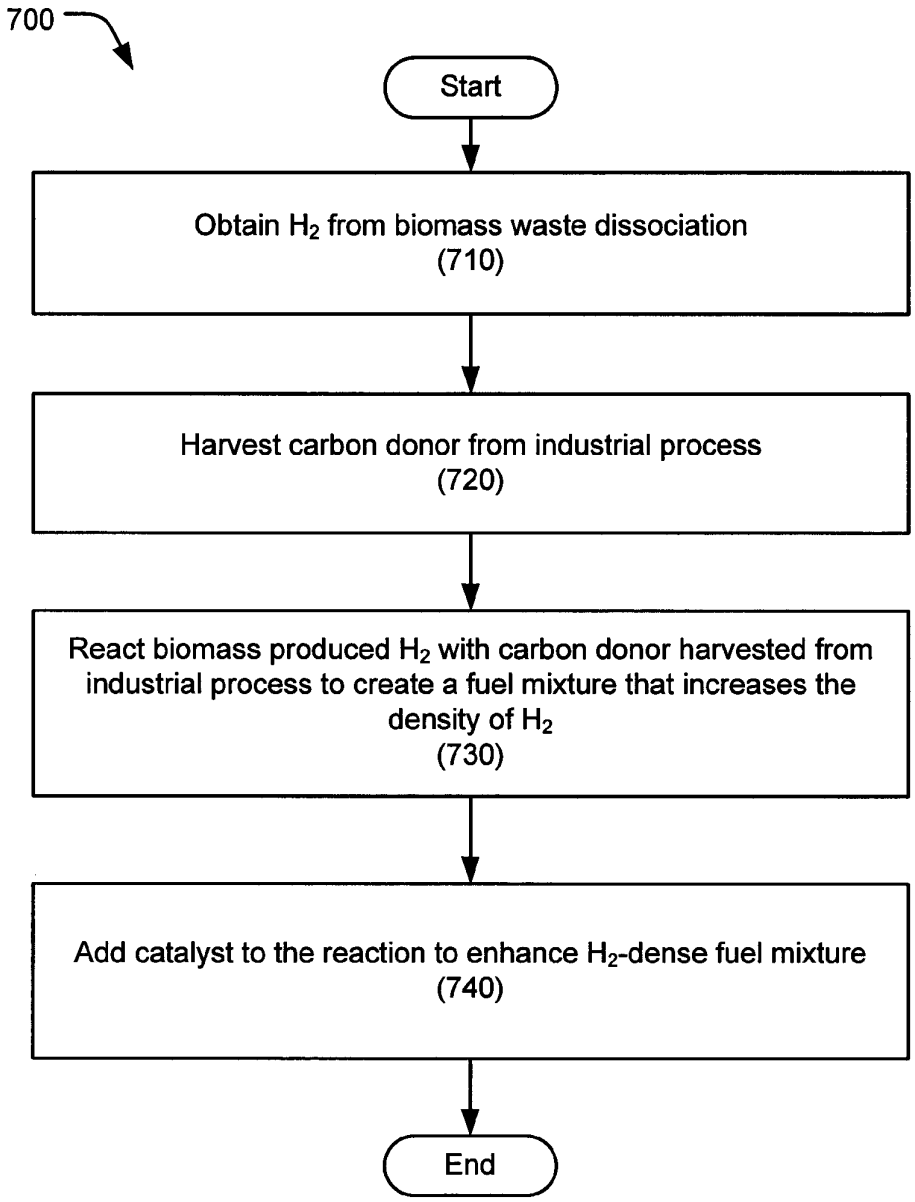
700
Start
Obtain H_2 from biomass waste dissociation
(710)
Harvest carbon donor from industrial process
(720)
React biomass produced H_2 with carbon donor harvested from industrial process to create a fuel mixture that increases the density of H_2
(730)
Add catalyst to the reaction to enhance H_2-dense fuel mixture
(740)
End

FIG. 7

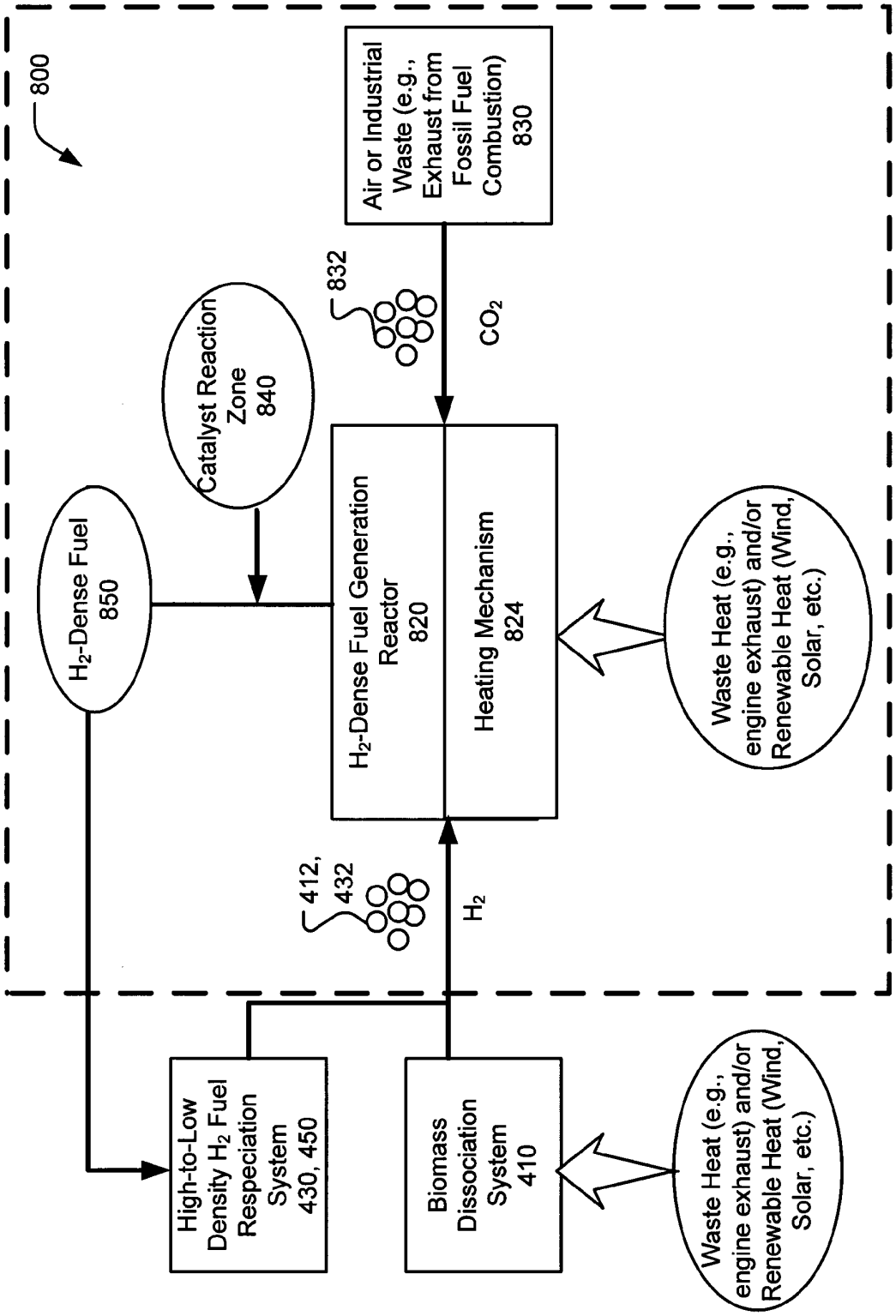
800
Air or Industrial Waste (e.g., Exhaust from Fossil Fuel Combustion) 830
832
CO_2
Catalyst Reaction Zone 840
H_2-Dense Fuel 850
H_2-Dense Fuel Generation Reactor 820
Heating Mechanism 824
Waste Heat (e.g., engine exhaust) and/or Renewable Heat (Wind, Solar, etc.)
412, 432
H_2
High-to-Low Density H_2 Fuel Respeciation System 430, 450
Biomass Dissociation System 410
Waste Heat (e.g., engine exhaust) and/or Renewable Heat (Wind, Solar, etc.)

FIG. 8

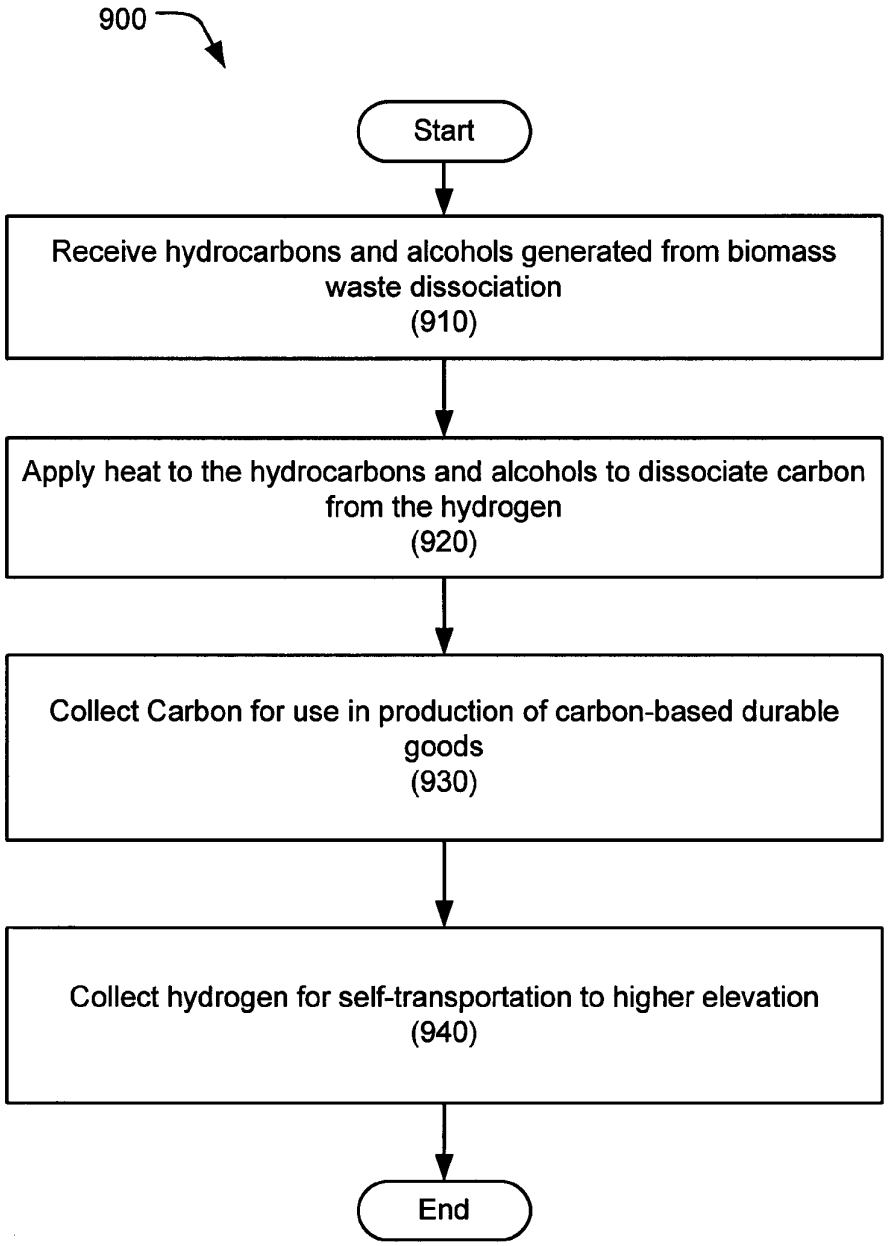
900
Start
Receive hydrocarbons and alcohols generated from biomass waste dissociation
(910)
Apply heat to the hydrocarbons and alcohols to dissociate carbon from the hydrogen
(920)
Collect Carbon for use in production of carbon-based durable goods
(930)
Collect hydrogen for self-transportation to higher elevation
(940)
End

FIG. 9

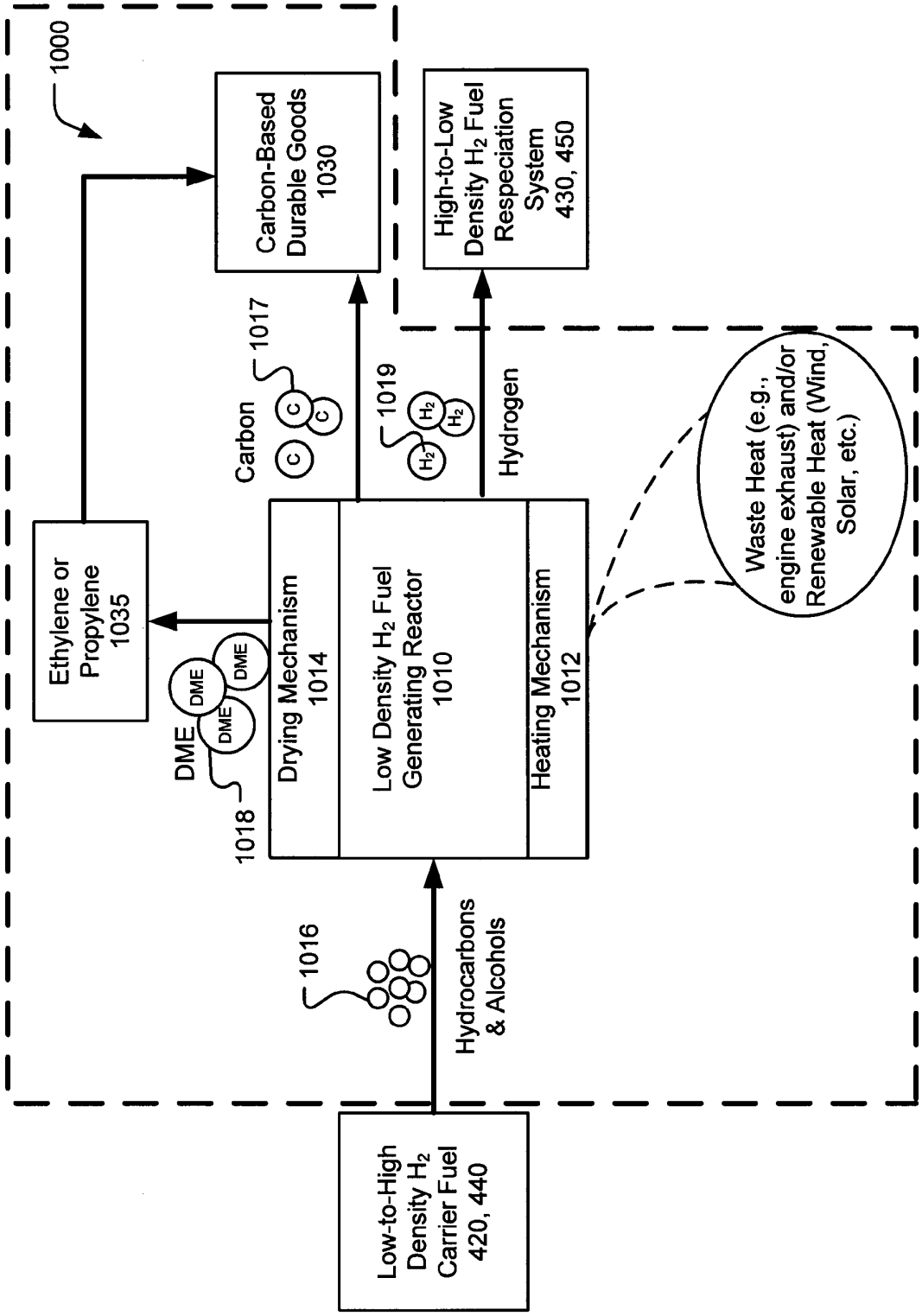
1000
Carbon-Based Durable Goods 1030
High-to-Low Density H_2 Fuel Respeciation System 430, 450
Carbon
1017
C
C
C
1019
H_2
H_2
H_2
Hydrogen
Waste Heat (e.g., engine exhaust) and/or Renewable Heat (Wind, Solar, etc.)
Ethylene or Propylene 1035
DME
DME
DME
DME
1018
Drying Mechanism 1014
Low Density H_2 Fuel Generating Reactor 1010
Heating Mechanism 1012
1016
Hydrocarbons & Alcohols
Low-to-High Density H_2 Carrier Fuel 420, 440

FIG. 10

PCT/US2011/024799

PATENT COOPERATION TREATY

69545-9105.WOOD
SDB/NK

From the INTERNATIONAL SEARCHING AUTHORITY

To:

BETCHER SUSAN D.

PERKINS COIE LLP P.O. BOX 1247 SEATTLE WA 98111-1247 USA

DOCKETED
12-18-11
1-18-12
☒ Deadline
☐ Follow up
☐ Previously
☐ Abandoned
☐ Transferred
☐ Dedocketed

RECEIVED
PATENT DOCKETING
OCT 24 2011
PERKINS COIE LLP

PCT

NOTIFICATION OF TRANSMITTAL OF THE INTERNATIONAL SEARCH REPORT AND THE WRITTEN OPINION OF THE INTERNATIONAL SEARCHING AUTHORITY, OR THE DECLARATION

(PCT Rule 44.1)

	Date of mailing (day/month/year) 18 OCTOBER 2011 (18.10.2011)
Applicant's or agent's file reference 695459105.WO	FOR FURTHER ACTION See paragraphs 1 and 4 below
International application No **PCT/US2011/024799**	International filing date (day/month/year) **14 FEBRUARY 2011 (14.02.2011)**
Applicant **MCALISTER ROY EDWARD**	

1. ☒ The applicant is hereby notified that the international search report and the written opinion of the International Searching Authority have been established and are transmitted herewith.

Filing of amendments and statement under Article 19:

The applicant is entitled, if he so wishes, to amend the claims of the international application (see Rule 46):

When? The time limit for filing such amendments is normally two months from the date of transmittal of the international search report.

Where? Directly to the International Bureau of WIPO, 34 chemin des Colombettes 1211 Geneva 20, Switzerland, Facsimile No.: +41 22 338 82 70

For more detailed instructions, see *PCT Applicant's Guide*, International Phase, paragraphs 9.004 , 9.011.

2. ☐ The applicant is hereby notified that no international search report will be established and that the declaration under Article 17(2)(a) to that effect and the written opinion of the International Searching Authority are transmitted herewith.

3. ☐ **With regard to any protest** against payment of (an) additional fee(s) under Rule 40.2, the applicant is notified that:

☐ the protest together with the decision thereon has been transmitted to the International Bureau together with any request to forward the texts of both the protest and the decision thereon to the designated Offices.

☐ no decision has been made yet on the protest; the applicant will be notified as soon as a decision is made.

4. **Reminders**

The applicant may submit comments on an informal basis on the written opinion of the International Searching Authority to the International Bureau. The International Bureau will send a copy of such comments to all designated Offices unless an international preliminary examination report has been or is to be established. Following the expiration of 30 months from the priority date, these comments will also be made available to the public.

Shortly after the expiration of **18 months** from the priority date, the international application will be published by the International Bureau. If the applicant wishes to avoid or postpone publication, a notice of withdrawal of the international application, or of the priority claim, must reach the International Bureau before the completion of the technical preparations for international publication (Rules 90bis.1 and 90bis.3).

Within **19 months** from the priority date, but only in respect of some designated Offices, a demand for international preliminary examination must be filed if the applicant wishes to postpone the entry into the national phase **until 30 months** from the priority date (in some Offices even later); otherwise, the applicant must, **within 20 months** from the priority date, perform the prescribed acts for entry into the national phase before those designated Offices.

In respect of other designated Offices, the time limit of **30 months** (or later) will apply even if no demand is filed within 19months.

For details about the applicable time limits, Office by Office, see www.wipo.int/pct/en/texts/time_limits.html and the PCT Applicant's Guide, National Chapters.

Name and mailing address of the ISA/KR Korean Intellectual Property Office Government Complex-Daejeon, 189 Cheongsa-ro, Seo-gu, Daejeon 302-701, Republic of Korea Facsimile No. 82-42-472-7140	Authorized officer COMMISSIONER Telephone No. 82-42-481-8752

Form PCT/ISA/220 (July 2010)

* Attention

Copies of the documents cited in the international search report can be searched in the following Korean Intellectual Property Office English website for three months from the date of mailing of the international search report.

http://www.kipo.go.kr/en/ => PCT Services => PCT Services

ID : PCT international application number
PW : **X9Q9TBU9**

Inquiries related to PCT International Search Report or Written Opinion prepared by KIPO as an International Searching Authority can be answered not only by KIPO but also through IPKC (Intellectual Property Korea Center), located in Vienna, VA, which functions as a PCT Help Desk for PCT applicants.

Homepage: http://www.ipkcenter.com
Email: ipkc@ipkcenter.com
Phone: +1 703 388 1066
Fax: +1 703 388 1084

PATENT COOPERATION TREATY

PCT

INTERNATIONAL SEARCH REPORT

(PCT Article 18 and Rules 43 and 44)

Applicant's or agent's file reference 695459105.WO	FOR FURTHER ACTION	see Form PCT/ISA/220 as well as, where applicable, item 5 below.
International application No. **PCT/US2011/024799**	International filing date *(day/month/year)* **14 FEBRUARY 2011 (14.02.2011)**	(Earliest) Priority Date *(day/month/year)* 13 FEBRUARY 2010 (13.02.2010)
Applicant **MCALISTER ROY EDWARD**		

This International search report has been prepared by this International Searching Authority and is transmitted to the applicant according to Article 18. A copy is being transmitted to the International Bureau.

This international search report consists of a total of 3 sheets.

☐ It is also accompanied by a copy of each prior art document cited in this report.

1. **Basis of the report**
   a. With regard to the **language**, the international search was carried out on the basis of:
      ☒ the international application in the language in which it was filed
      ☐ a translation of the international application into _____, which is the language of a translation furnished for the purposes of international search (Rules 12.3(a) and 23.1(b))
   b. ☐ This international search report has been established taking into account the **rectification of an obvious mistake** authorized by or notified to this Authority under Rule 91 (Rule 43.6*bis*(a)).
   c. ☐ With regard to any **nucleotide and/or amino acid sequence** disclosed in the international application, see Box No. I.
2. ☐ **Certain claims were found unsearchable** (See Box No. II)
3. ☐ **Unity of invention is lacking** (See Box No. III)
4. With regard to the **title**,
   ☒ the text is approved as submitted by the applicant.
   ☐ the text has been established by this Authority to read as follows:
5. With regard to the **abstract**,
   ☒ the text is approved as submitted by the applicant.
   ☐ the text has been established, according to Rule 38.2, by this Authority as it appears in Box No. IV. The applicant may, within one month from the date of mailing of this international search report, submit comments to this Authority.
6. With regard to the **drawings**,
   a. the figure of the drawings to be published with the abstract is Figure No. 1
      ☒ as suggested by the applicant.
      ☐ as selected by this Authority, because the applicant failed to suggest a figure.
      ☐ as selected by this Authority, because this figure better characterizes the invention.
   b. ☐ none of the figure is to be published with the abstract.

INTERNATIONAL SEARCH REPORT

International application No.
PCT/US2011/024799

A. CLASSIFICATION OF SUBJECT MATTER

C10B 53/02(2006.01)i, C01B 3/02(2006.01)i, B09B 3/00(2006.01)i, C07C 4/04(2006.01)i

According to International Patent Classification (IPC) or to both national classification and IPC

B. FIELDS SEARCHED

Minimum documentation searched (classification system followed by classification symbols)
C10B 53/02; F25J 3/00; F25J 1/00; C01B

Documentation searched other than minimum documentation to the extent that such documents are included in the fields searched
Korean utility models and applications for utility models
Japanese utility models and applications for utility models

Electronic data base consulted during the international search (name of data base and, where practicable, search terms used)
eKOMPASS(KIPO internal) & Keywords:hydrogen, transport, carrier

C. DOCUMENTS CONSIDERED TO BE RELEVANT

Category*	Citation of document, with indication, where appropriate, of the relevant passages	Relevant to claim No.
A	WO 2004-092055 A2 (BEYER, JAMES, H.) 28 October 2004 See abstract and figure 8B.	1-24
A	US 2007-0137246 A1 (BATTELLE ENERGY ALLIANCE, LLC) 21 June 2007 See abstract.	1-24

☐ Further documents are listed in the continuation of Box C. ☒ See patent family annex.

* Special categories of cited documents:
"A" document defining the general state of the art which is not considered to be of particular relevance
"E" earlier application or patent but published on or after the international filing date
"L" document which may throw doubts on priority claim(s) or which is cited to establish the publication date of citation or other special reason (as specified)
"O" document referring to an oral disclosure, use, exhibition or other means
"P" document published prior to the international filing date but later than the priority date claimed
"T" later document published after the international filing date or priority date and not in conflict with the application but cited to understand the principle or theory underlying the invention
"X" document of particular relevance; the claimed invention cannot be considered novel or cannot be considered to involve an inventive step when the document is taken alone
"Y" document of particular relevance; the claimed invention cannot be considered to involve an inventive step when the document is combined with one or more other such documents,such combination being obvious to a person skilled in the art
"&" document member of the same patent family

Date of the actual completion of the international search	Date of mailing of the international search report
18 OCTOBER 2011 (18.10.2011)	**18 OCTOBER 2011 (18.10.2011)**
Name and mailing address of the ISA/KR Korean Intellectual Property Office Government Complex-Daejeon, 189 Cheongsa-ro, Seo-gu, Daejeon 302-701, Republic of Korea Facsimile No. 82-42-472-7140	Authorized officer LEE, Choong Jae Telephone No. 82-42-481-8711

INTERNATIONAL SEARCH REPORT
Information on patent family members

International application No.
PCT/US2011/024799

Patent document cited in search report	Publication date	Patent family member(s)	Publication date
WO 2004-092055 A2	28.10.2004	CN 1805898 A	19.07.2006
		CN 1805898 C0	19.07.2006
		EP 1628910 A2	01.03.2006
		KR 10-2005-0081847 A	19.08.2005
		US 2004-0204503 A1	14.10.2004
		WO 2004-092055 A3	24.02.2005
		WO 2004-092055 A3	28.10.2004
US 2007-0137246 A1	21.06.2007	AU 2002-346035 A1	09.09.2003
		AU 2002-346035 B2	24.04.2008
		CA 2473185 A1	04.09.2003
		CA 2473185 C	07.07.2009
		CA 2607866 A1	04.09.2003
		CA 2607866 C	14.09.2010
		CA 2613276 A1	04.09.2003
		CA 2613276 C	07.10.2008
		CN 1615415 A	11.05.2005
		CN 1615415 C0	03.01.2007
		EP 1478874 A1	24.11.2004
		EP 1867939 A2	19.12.2007
		EP 1867940 A2	19.12.2007
		JP 2005-519153 A	30.06.2005
		JP 2009-150646 A	09.07.2009
		JP 2009-263674 A	12.11.2009
		KR 10-0819722 B1	07.04.2008
		US 2002-0174678 A1	28.11.2002
		US 2003-0192343 A1	16.10.2003
		US 2003-0196452 A1	23.10.2003
		US 2006-0213223 A1	28.09.2006
		US 2006-0218939 A1	05.10.2006
		US 2007-0017250 A1	25.01.2007
		US 2007-0107465 A1	17.05.2007
		US 2010-0186446 A1	29.07.2010
		US 6581409 B2	24.06.2003
		US 6886362 B2	03.05.2005
		US 6962061 B2	08.11.2005
		US 7219512 B1	22.05.2007
		US 7591150 B2	22.09.2009
		US 7594414 B2	29.09.2009
		US 7637122 B2	29.12.2009
		WO 03-072991 A1	04.09.2003
		WO 2007-130108 A1	15.11.2007
		WO 2007-133233 A1	22.11.2007
		WO 2008-039210 A1	03.04.2008
		WO 2008-064038 A2	29.05.2008
		WO 2008-064038 A3	29.05.2008
		WO 2008-100661 A1	21.08.2008
		WO 2009-091391 A1	23.07.2009

PATENT COOPERATION TREATY

From the
INTERNATIONAL SEARCHING AUTHORITY

To:
BETCHER SUSAN D.

PERKINS COIE LLP P.O. BOX 1247 SEATTLE WA 98111-1247 USA

PCT

WRITTEN OPINION OF THE INTERNATIONAL SEARCHING AUTHORITY

(PCT Rule 43bis.1)

Date of mailing *(day/month/year)*	**18 OCTOBER 2011 (18.10.2011)**
Applicant's or agent's file reference 695459105.WO	**FOR FURTHER ACTION** See paragraph 2 below

International application No.	International filing date *(day/month/year)*	Priority date *(day/month/year)*
PCT/US2011/024799	**14 FEBRUARY 2011 (14.02.2011)**	13 FEBRUARY 2010 (13.02.2010)

International Patent Classification (IPC) or both national classification and IPC

C10B 53/02(2006.01)i, C01B 3/02(2006.01)i, B09B 3/00(2006.01)i, C07C 4/04(2006.01)i

Applicant

MCALISTER ROY EDWARD

1. This opinion contains indications relating to the following items:

- [x] Box No. I Basis of the opinion
- [ ] Box No. II Priority
- [ ] Box No. III Non-establishment of opinion with regard to novelty, inventive step and industrial applicability
- [ ] Box No. IV Lack of unity of invention
- [x] Box No. V Reasoned statement under Rule 43bis.1(a)(i) with regard to novelty, inventive step or industrial applicability; citations and explanations supporting such statement
- [ ] Box No. VI Certain documents cited
- [ ] Box No. VII Certain defects in the international application
- [x] Box No. VIII Certain observations on the international application

2. **FURTHER ACTION**

If a demand for international preliminary examination is made, this opinion will be considered to be a written opinion of the International Preliminary Examining Authority ("IPEA") except that this does not apply where the applicant chooses an Authority other than this one to be the IPEA and the chosen IPEA has notified the International Bureau under Rule 66.1bis(b) that written opinions of this International Searching Authority will not be so considered.

If this opinion is, as provided above, considered to be a written opinion of the IPEA, the applicant is invited to submit to the IPEA a written reply together, where appropriate, with amendments, before the expiration of 3 months from the date of mailing of Form PCT/ISA/220 or before the expiration of 22 months from the priority date, whichever expires later.
For further options, see Form PCT/ISA/220.

Name and mailing address of the ISA/KR	Date of completion of this opinion	Authorized officer
Korean Intellectual Property Office Government Complex-Daejeon, 189 Cheongsa-ro, Seo-gu, Daejeon 302-701, Republic of Korea Facsimile No. 82-42-472-7140	18 OCTOBER 2011 (18.10.2011)	LEE, Choong Jae Telephone No.82-42-481-8711

WRITTEN OPINION OF THE INTERNATIONAL SEARCHING AUTHORITY

International application No.
PCT/US2011/024799

Box No. 1 Basis of this opinion

1. With regard to the language, this opinion has been established on the basis of:

   ☒ the international application in the language in which it was filed

   ☐ a translation of the international application into _____, which is the language of a translation furnished for the purposes of international search (Rules 12.3(a) and 23.1(b))

2. ☐ This opinion has been established taking into account the **rectification of an obvious mistake** authorized by or notified to this Authority under Rule 91 (Rule 43*bis*.1(a))

3. With regard to any **nucleotide and/or amino acid sequence** disclosed in the international application, this opinion has been established on the basis of:

   a. a sequence listing filed or furnished
      ☐ on paper
      ☐ in electronic form

   b. time of filing or furnishing
      ☐ contained in the international application as filed.
      ☐ filed together with the international application in electronic form.
      ☐ furnished subsequently to this Authority for the purposes of search.

4. ☐ In addition, in the case that more than one version or copy of a sequence listing has been filed or furnished, the required statements that the information in the subsequent or additioanl copies is identical to that in the application as filed or does not go beyond the application as filed, as appropriate, were furnished.

5. Additional comments:

WRITTEN OPINION OF THE INTERNATIONAL SEARCHING AUTHORITY	International application No. PCT/US2011/024799

Box No. V Reasoned statement under Rule 43bis.1(a)(i) with regard to novelty, inventive step or industrial applicability; citations and explanations supporting such statement

1. Statement

Novelty (N)	Claims	1-24	YES
	Claims	NONE	NO
Inventive step (IS)	Claims	1-24	YES
	Claims	NONE	NO
Industrial applicability (IA)	Claims	1-24	YES
	Claims	NONE	NO

2. Citations and explanations :

Reference is made to the following documents:

D1: WO 2004-092055 A2 (BEYER, JAMES, H.) 28 October 2004
D2: US 2007-0137246 A1 (BATTELLE ENERGY ALLIANCE, LLC) 21 June 2007

1. Novelty and inventive step

1.1 Claims 1-12
D1 and D2 disclose a method of transporting hydrogen by using a hydrogen carrier. D1 uses carbon dioxide, and D2 uses natural gas. However, the subject matter of claim 1 differs from these prior art documents in that it self-transports the low density hydrogen fuel in a pipeline to a location of a higher elevation without adding energy or pressure, and it delivers the high density hydrogen carrier to a location of a lower elevation. D1 and D2 do not teach about the concept of transporting hydrogen depending on the difference of density and elevation, and it is not obvious to a person skilled in the art by the documents, taken alone or in combination. Therefore, claim 1 meets the requirements of PCT Articles 33(2) and (3) with respect to novelty and inventive step.

Claims 2-12 are dependent on claim 1 and therefore meet the requirements of PCT Articles 33(2) and (3).

1.2. Claims 13-24.
Claims 13-24 are substantially identical to claims 1-12 except the category of invention. Therefore, claims 13-24 also meet the requirements of PCT Articles 33(2) and (3).

2. Industrial applicability

Claims 1-24 are industrially applicable under PCT Article 33(4).

Box No. VIII Certain observations on the international application

The following observations on the clarity of the claims, description, and drawings or on the question whether the claims are fully supported by the description, are made:

Claims 5 and 17 are worded in reference to the hydrogen donor of claim 1. However, said hydrogen donor has not been worded in claim 1.

UNITED STATES PATENT AND TRADEMARK OFFICE

Commissioner for Patents
United States Patent and Trademark Office
P.O. Box 1450

MAILED
FEB 24 2012
OFFICE OF PETITIONS

PERKINS COIE LLP
PATENT-SEA
P.O. BOX 1247
SEATTLE WA 98111-1247

In re Application of
Roy Edward MCALISTER
Application No. 13/027,185
Filed: February 14, 2011
Atty. Docket No.: 695459105US
For: ENGINEERED FUEL STORAGE, RESPECIATION AND TRANSPORT

: DECISION ON REQUEST TO
: PARTICIPATE IN PCT-PPH PROGRAM
: AND PETITION TO MAKE SPECIAL
: UNDER 37 CFR 1.102(a)

This is a decision on the request to participate in the PCT Patent Prosecution Highway (PCT-PPH) program and the petition under 37 CFR 1.102(a), filed January 23, 2012, to make the above-identified application special.

The request is **GRANTED**.

A grantable request to participate in the PCT –PPH program and petition to make special under 37 CFR 1.102(a) require:

(1) the U.S. application must have an eligible relationship to one or more PCT application where the ISA or IPEA are the JPO, EPO, KIPO, IPAU, Russia, Spain, Finland, Austria, or USPTO;

(2) at least one claim in the PCT application has novelty, inventive step, and industrial applicability and must be free of any observations in Box VIII in the latest work product in the international stage or applicant must identify and explain why the claim(s) is/are not subject to the observation in Box VIII;

(3) applicant must submit a copy of the claim(s) from the PCT application(s) that have novelty, inventive step, and industrial applicability along with an English translation thereof and a statement that the English translation is accurate, if the claims are not in the English language;

(4) all the claims in the U.S. application must sufficiently correspond or be amended to sufficiently correspond to the claim(s) that have novelty, inventive step, and industrial applicability in the PCT application(s);

(5) examination of the U.S. application has not begun;

(6) applicant must submit a copy of the latest international work product from the PCT application indicating that the claim(s) have novelty, inventive step, and industrial applicability along with an English translation thereof;

(7) applicant must submit an IDS listing the documents cited by the PCT examiner in the international work product along with copies of documents except U.S. patents or U.S. patent application publications; and

(8) applicant is required to submit a claims correspondence table in English which indicates how all the claims in the U.S. application correspond to the claims indicated as having novelty, inventive step, and industrial applicability in the latest international work product.

The request to participate in the PCT-PPH program and petition comply with the above requirements. Accordingly, the above-identified application has been accorded "special" status.

Telephone inquiries concerning this decision should be directed to Robert DeWitty, Petitions Attorney, Office of Petitions (571-272-8427). All other inquiries concerning the examination or status of the application is accessible in the PAIR system at http://www.uspto.gov/ebc.index.html.

This application will be forwarded to Technology Center Art Unit 1723 for action commensurate with this decision.

Thurman K. Page

David Bucci
Petitions Examiner
Office of Petitions

Doc Code: PET.GREEN
Document Description: Petition for Green Tech Pilot

PTO/SB/420 (11-10)
Approved for use through 01/31/2011. OMB 0651-0062
U.S. Patent and Trademark Office; U.S. DEPARTMENT OF COMMERCE
Under the Paperwork Reduction Act of 1995, no persons are required to respond to a collection of information unless it displays a valid OMB control number.

PETITION TO MAKE SPECIAL UNDER THE GREEN TECHNOLOGY PILOT PROGRAM

Attorney Docket Number:	695458801US1	Application Number (if known): 13/027,188- Conf. #6337	Filing date: February 14, 2011
First Named Inventor:	Roy E. McAlister, P.E.		
Title:	METHODS, DEVICES, AND SYSTEMS FOR DETECTING PROPERTIES OF TARGET SAMPLES		

APPLICANT HEREBY REQUESTS TO PARTICIPATE IN THE GREEN TECHNOLOGY PILOT PROGRAM FOR THE ABOVE-IDENTIFIED APPLICATION. See Instruction Sheet on page 2.

This petition must be timely filed electronically using the USPTO electronic filing system, EFS-Web.

1. By filing this petition:

   Applicant is requesting early publication: Applicant hereby requests early publication under 37 CFR 1.219 and the publication fee set forth in 37 CFR 1.18(d) accompanies this request.

2. By filing this petition: applicant is agreeing to make an election without traverse in a telephonic interview and elect an invention that meets the eligibility requirements for the Green Technology Pilot Program, if the Office determines that the claims are not obviously directed to a single invention. See Instruction Sheet.

3. This request is accompanied by statements of special status for the eligibility requirement.

4. The application contains no more than three (3) independent claims and twenty (20) total claims.

5. The application does not contain any multiple dependent claims.

6. Other attachments: Statement in Support of Petition

Signature		Date	5.3.11
Name (Print/Typed)	Susan D. Belcher	Registration Number	43,498

Note: Signatures of all the inventors or assignees of record of the entire interest or their representative(s) are required in accordance with 37 CFR 1.33 and 11.18. Please see 37 CFR 1.4(d) for the form of the signature. If necessary, submit multiple forms if more than one signature, see below.*

☐ *Total of 1 forms are submitted.

Docket No.: 695458801US1
(PATENT)

IN THE UNITED STATES PATENT AND TRADEMARK OFFICE

In re Patent Application of:
Roy E. McAlister, P.E.

Application No.: 13/027,188

Confirmation No.: 6337

Filed: February 14, 2011

Art Unit: 1634

For: METHODS, DEVICES, AND SYSTEMS FOR DETECTING PROPERTIES OF TARGET SAMPLES

Examiner: Not Yet Assigned

STATEMENT IN SUPPORT OF PETITION TO MAKE SPECIAL

MS Missing Parts
Commissioner for Patents
P.O. Box 1450
Alexandria, VA 22313-1450

Sir:

This paper is filed in support of the Petition to Make Special under the Green Technology Pilot Program filed concurrently herewith.

Petitioner hereby states that the referenced application is directed to a single invention that materially enhances the quality of the environment, or that materially contributes to: (1) the discovery or development of renewable energy resources; (2) the more efficient utilization and conservation of energy resources; or (3) green house gas emission reduction.

More specifically, the specification and claims are directed to green house gas emissions reductions using a system and method for monitoring an environment for the presence and/or properties of a target sample constituting a threat, for example, unacceptable emissions.

In light of the above, it is requested that the Petition to Make Special under the Green Technology Pilot Program be granted.

Applicant believes no fee is due with this response. However, if a fee is due, please charge our Deposit Account No. 50-0665, under Order No. 695458801US1 from which the undersigned is authorized to draw.

Dated: 5.3.11

Respectfully submitted,

By

Susan D. Betcher
Registration No.: 43,498
PERKINS COIE LLP
P.O. Box 1247
Seattle, Washington 98111-1247
(206) 359-8000
(206) 359-7198 (Fax)
Attorney for Applicant

UNITED STATES PATENT AND TRADEMARK OFFICE

UNITED STATES DEPARTMENT OF COMMERCE
United States Patent and Trademark Office
Address: COMMISSIONER FOR PATENTS
P.O. Box 1450
Alexandria, Virginia 22313-1450
www.uspto.gov

APPLICATION NO.	FILING DATE	FIRST NAMED INVENTOR	ATTORNEY DOCKET NO.	CONFIRMATION NO.
13/027,188	02/14/2011	Roy Edward McAlister	695458801US1	6337

25096 7590 05/31/2011
PERKINS COIE LLP
PATENT-SEA
P.O. BOX 1247
SEATTLE, WA 98111-1247

EXAMINER	
ART UNIT	PAPER NUMBER
1634	

NOTIFICATION DATE	DELIVERY MODE
05/31/2011	ELECTRONIC

Please find below and/or attached an Office communication concerning this application or proceeding.

The time period for reply, if any, is set in the attached communication.

Notice of the Office communication was sent electronically on above-indicated "Notification Date" to the following e-mail address(es):

patentprocurement@perkinscoie.com

UNITED STATES PATENT AND TRADEMARK OFFICE

Commissioner for Patents
United States Patent and Trademark Office
P.O. Box 1450
Alexandria, VA 22313-1450
www.uspto.gov

MAY 3 1 2011

PERKINS COIE LLP
PATENT-SEA
P.O. BOX 1247
SEATTLE WA 98111-1247

In re Application of	:	
MCALISTER, Roy *et al.*	:	DECISION ON PETITION
Application No. 13/027188	:	TO MAKE SPECIAL UNDER
Filed: February 14, 2011	:	THE GREEN TECHNOLOGY
Attorney Docket No. 695458801US1	:	PILOT PROGRAM

This is a decision on the petition under 37 CFR 1.102, filed May 3rd, 2011, to make the above-identified application special under the pilot program for applications pertaining to Green Technologies as set forth in 74 Federal Register Notice 64666 (December 8, 2009) and amended by 75 Federal Register Notice 28554 (May 21, 2010) and 75 Federal Register Notice 69049 (November 10, 2010).

The petition is **GRANTED**.

A grantable petition to make an application special under 37 CFR 1.102 and the pilot program as set forth in 74 FR 64666 must be directed to a nonprovisional application filed under 35 USC 111(a) or be a national stage entry under 35 USC 371, exclusive of any reissue applications.

In order to qualify for special status, the following requirements must be met. 1) The application must have no more than 3 independent claims and no more than 20 total claims. 2) The application must not contain any multiple dependent claims. 3) The petition must state the basis for seeking special status, i.e., the claimed invention either: A) materially enhances the quality of the environment or B) materially contributes to: i) the discovery or development of renewable energy resources, ii) the more efficient utilization and conservation of energy resources, or iii) greenhouse gas emission reduction. 4) If the disclosure is not clear on its face that the claimed invention materially contributes under category (A) or (B), the petition must be accompanied by a statement by the applicant, assignee, or an attorney/agent registered to practice before the Office explaining how the materiality standard is met. 5) A statement that applicant will agree to make an election without traverse in a telephonic interview if a restriction requirement is made by the examiner. 6) The petition to make special must be filed electronically. 7) The petition must be filed at least one day prior to the date that a first Office Action appears in the Patent Application Information Retrieval (PAIR) system. 8) The petition must be accompanied by a request for early publication in compliance with 37 CFR 1.219 and include the publication fee as set forth in 37 CFR 1.18(d).

The requirement for a fee for consideration of the petition to make special for applications pertaining to Green Technologies has been waived.

The instant petition complies with items 1 – 8 above. Accordingly, the above-identified application has been accorded "special" status.

Telephone inquires concerning this decision should be directed to Manjunath Rao at 571-272-0939.

The application is being forwarded to the Technology Center Art Unit 1634 for action on the merits commensurate with this decision.

/Manjunath Rao/

Manjunath Rao
Supervisory Patent Examiner &
POC for TC 1600 Green Tech Petitions
Technology Center 1600

Doc Code: PET.GREEN
Document Description: Petition for Green Tech Pilot

PTO/SB/420 (11-10)
Approved for use through 01/31/2011. OMB 0651-0062
U.S. Patent and Trademark Office; U.S. DEPARTMENT OF COMMERCE
Under the Paperwork Reduction Act of 1995, no persons are required to respond to a collection of information unless it displays a valid OMB control number.

PETITION TO MAKE SPECIAL UNDER THE GREEN TECHNOLOGY PILOT PROGRAM

Attorney Docket Number: 695459006US	Application Number (if known): 13/027,195- Conf. #6353	Filing date: February 14, 2011
First Named Inventor: Roy E. McAlister, P.E.		
Title: OXYGENATED FUEL		

APPLICANT HEREBY REQUESTS TO PARTICIPATE IN THE GREEN TECHNOLOGY PILOT PROGRAM FOR THE ABOVE-IDENTIFIED APPLICATION. See Instruction Sheet on page 2.

This petition must be timely filed electronically using the USPTO electronic filing system, EFS-Web.

1. By filing this petition:

   Applicant is requesting early publication: Applicant hereby requests early publication under 37 CFR 1.219 and the publication fee set forth in 37 CFR 1.18(d) accompanies this request.

2. By filing this petition: applicant is agreeing to make an election without traverse in a telephonic interview and elect an invention that meets the eligibility requirements for the Green Technology Pilot Program, if the Office determines that the claims are not obviously directed to a single invention. See Instruction Sheet.

3. This request is accompanied by statements of special status for the eligibility requirement.

4. The application contains no more than three (3) independent claims and twenty (20) total claims.

5. The application does not contain any multiple dependent claims.

6. Other attachments: Statement in Support of Petition

Signature	Date 5.3.11
Name (Print/Typed) Susan D. Betcher	Registration Number 43,498

Note: Signatures of all the inventors or assignees of record of the entire interest or their representative(s) are required in accordance with 37 CFR 1.33 and 11.18. Please see 37 CFR 1.4(d) for the form of the signature. If necessary, submit multiple forms if more than one signature, see below.*

☐ *Total of 1 forms are submitted.

Docket No.: 695459006US
(PATENT)

IN THE UNITED STATES PATENT AND TRADEMARK OFFICE

In re Patent Application of:
Roy E. McAlister, P.E.

Application No.: 13/027,195 | Confirmation No.: 6353

Filed: February 14, 2011 | Art Unit: 1736

For: OXYGENATED FUEL | Examiner: Not Yet Assigned

STATEMENT IN SUPPORT OF PETITION TO MAKE SPECIAL

MS Missing Parts
Commissioner for Patents
P.O. Box 1450
Alexandria, VA 22313-1450

Sir:

This paper is filed in support of the Petition to Make Special under the Green Technology Pilot Program filed concurrently herewith.

Petitioner hereby states that the referenced application is directed to a single invention that materially enhances the quality of the environment, or that materially contributes to: (1) the discovery or development of renewable energy resources; (2) the more efficient utilization and conservation of energy resources; or (3) green house gas emission reduction.

More specifically, the specification and claims are directed to a method of producing an oxygenated fuel from biomass waste for use in a combustion system providing green house gas emission reduction.

In light of the above, it is requested that the Petition to Make Special under the Green Technology Pilot Program be granted.

Applicant believes no fee is due with this response. However, if a fee is due, please charge our Deposit Account No. 50-0665, under Order No. 695459006US from which the undersigned is authorized to draw.

Dated: 5.3.11

Respectfully submitted,

By

Susan D. Betcher
Registration No.: 43,498
PERKINS COIE LLP
P.O. Box 1247
Seattle, Washington 98111-1247
(206) 359-8000
(206) 359-7198 (Fax)
Attorney for Applicant

UNITED STATES PATENT AND TRADEMARK OFFICE

UNITED STATES DEPARTMENT OF COMMERCE
United States Patent and Trademark Office
Address: COMMISSIONER FOR PATENTS
P.O. Box 1450
Alexandria, Virginia 22313-1450
www.uspto.gov

APPLICATION NO.	FILING DATE	FIRST NAMED INVENTOR	ATTORNEY DOCKET NO.	CONFIRMATION NO.
13/027,195	02/14/2011	Roy Edward McAlister	695459006US	6353

25096 7590 05/26/2011
PERKINS COIE LLP
PATENT-SEA
P.O. BOX 1247
SEATTLE, WA 98111-1247

EXAMINER

ART UNIT	PAPER NUMBER
1736	

NOTIFICATION DATE	DELIVERY MODE
05/26/2011	ELECTRONIC

Please find below and/or attached an Office communication concerning this application or proceeding.

The time period for reply, if any, is set in the attached communication.

Notice of the Office communication was sent electronically on above-indicated "Notification Date" to the following e-mail address(es):

patentprocurement@perkinscoie.com

UNITED STATES PATENT AND TRADEMARK OFFICE

Commissioner for Patents
United States Patent and Trademark Office
P.O. Box 1450
Alexandria, VA 22313-1450
www.uspto.gov

PERKINS COIE LLP
PATENT-SEA
P.O. BOX 1247
SEATTLE WA 98111-1247

5/26/11

In re Application of	:	
McAlister	:	DECISION ON PETITION
Application No. 13/027,195	:	TO MAKE SPECIAL UNDER
Filed: 2/14/2011	:	THE GREEN TECHNOLOGY
Attorney Docket No. **695459006US**	:	PILOT PROGRAM

This is a decision on the petition under 37 CFR 1.102, filed 5/3/2011, to make the above-identified application special under the pilot program for applications pertaining to Green Technologies as set forth in 74 Federal Register Notice 64666 (December 8, 2009) and amended by 75 Federal Register Notice 28554 (May 21, 2010) and 75 Federal Register Notice 69049 (November 10, 2010).

The petition is **GRANTED**.

A grantable petition to make an application special under 37 CFR 1.102 and the pilot program as set forth in 74 FR 64666 must be directed to a nonprovisional application filed under 35 USC 111(a) or be a national stage entry under 35 USC 371, exclusive of any reissue applications.

In order to qualify for special status, the following requirements must be met. 1) The application must have no more than 3 independent claims and no more than 20 total claims. 2) The application must not contain any multiple dependent claims. 3) The petition must state the basis for seeking special status, i.e., the claimed invention either: A) materially enhances the quality of the environment or B) materially contributes to: i) the discovery or development of renewable energy resources, ii) the more efficient utilization and conservation of energy resources, or iii) greenhouse gas emission reduction. 4) If the disclosure is not clear on its face that the claimed invention materially contributes under category (A) or (B), the petition must be accompanied by a statement by the applicant, assignee, or an attorney/agent registered to practice before the Office explaining how the materiality standard is met. 5) A statement that applicant will agree to make an election without traverse in a telephonic interview if a restriction requirement is made by the examiner. 6) The petition to make special must be filed electronically. 7) The petition must be filed at least one day prior to the date that a first Office Action appears in the Patent Application Information Retrieval (PAIR) system. 8) The petition must be accompanied by a

request for early publication in compliance with 37 CFR 1.219 and include the publication fee as set forth in 37 CFR 1.18(d).

The requirement for a fee for consideration of the petition to make special for applications pertaining to Green Technologies has been waived.

The instant petition complies with items 1 – 8 above. Accordingly, the above-identified application has been accorded "special" status.

Telephone inquires concerning this decision should be directed to Tom Dunn at 571-272-1171.

The application is being forwarded to the Technology Center Art Unit 1736 for action on the merits commensurate with this decision.

/Tom Dunn/

Tom Dunn
Quality Assurance Specialist
Technology Center 1700

Doc Code: PET.GREEN
Document Description: Petition for Green Tech Pilot

PTO/SB/420 (11-10)
Approved for use through 01/31/2011. OMB 0651-0062
U.S. Patent and Trademark Office; U.S. DEPARTMENT OF COMMERCE
Under the Paperwork Reduction Act of 1995, no persons are required to respond to a collection of information unless it displays a valid OMB control number.

PETITION TO MAKE SPECIAL UNDER THE GREEN TECHNOLOGY PILOT PROGRAM

Attorney Docket Number:	695459004US	Application Number (if known): 13/027,196- Conf. #6354	Filing date: February 14, 2011
First Named Inventor:	Roy E. McAlister, P.E.		
Title:	CARBON RECYCLING AND REINVESTMENT USING THERMOCHEMICAL REGENERATION		

APPLICANT HEREBY REQUESTS TO PARTICIPATE IN THE GREEN TECHNOLOGY PILOT PROGRAM FOR THE ABOVE-IDENTIFIED APPLICATION. See Instruction Sheet on page 2.

This petition must be timely filed electronically using the USPTO electronic filing system, EFS-Web.

1. By filing this petition:

   Applicant is requesting early publication: Applicant hereby requests early publication under 37 CFR 1.219 and the publication fee set forth in 37 CFR 1.18(d) accompanies this request.

2. By filing this petition: applicant is agreeing to make an election without traverse in a telephonic interview and elect an invention that meets the eligibility requirements for the Green Technology Pilot Program, if the Office determines that the claims are not obviously directed to a single invention. See Instruction Sheet.

3. This request is accompanied by statements of special status for the eligibility requirement.

4. The application contains no more than three (3) independent claims and twenty (20) total claims.

5. The application does not contain any multiple dependent claims.

6. Other attachments: Statement in Support of Petition

Signature		Date	5.3.11
Name (Print/Typed)	Susan D. Betcher	Registration Number	43,498

Note: Signatures of all the inventors or assignees of record of the entire interest or their representative(s) are required in accordance with 37 CFR 1.33 and 11.18. Please see 37 CFR 1.4(d) for the form of the signature. If necessary, submit multiple forms if more than one signature, see below.*

☐ *Total of 1 forms are submitted.

Docket No.: 695459004US
(PATENT)

IN THE UNITED STATES PATENT AND TRADEMARK OFFICE

In re Patent Application of:
Roy E. McAlister, P.E.

Application No.: 13/027,196

Confirmation No.: 6354

Filed: February 14, 2011

Art Unit: 1632

For: CARBON RECYCLING AND REINVESTMENT USING THERMOCHEMICAL REGENERATION

Examiner: Not Yet Assigned

STATEMENT IN SUPPORT OF PETITION TO MAKE SPECIAL

MS Missing Parts
Commissioner for Patents
P.O. Box 1450
Alexandria, VA 22313-1450

Sir:

This paper is filed in support of the Petition to Make Special under the Green Technology Pilot Program filed concurrently herewith.

Petitioner hereby states that the referenced application is directed to a single invention that materially enhances the quality of the environment, or that materially contributes to: (1) the discovery or development of renewable energy resources; (2) the more efficient utilization and conservation of energy resources; or (3) green house gas emission reduction.

More specifically, the specification and claims are directed to the discovery or development of renewable energy resources using carbon recycling to produce a renewable fuel.

In light of the above, it is requested that the Petition to Make Special under the Green Technology Pilot Program be granted.

Applicant believes no fee is due with this response. However, if a fee is due, please charge our Deposit Account No. 50-0665, under Order No. 695459004US from which the undersigned is authorized to draw.

Dated: 5.3.11

Respectfully submitted,

By

Susan D. Betcher
Registration No.: 43,498
PERKINS COIE LLP
P.O. Box 1247
Seattle, Washington 98111-1247
(206) 359-8000
(206) 359-7198 (Fax)
Attorney for Applicant

UNITED STATES PATENT AND TRADEMARK OFFICE

UNITED STATES DEPARTMENT OF COMMERCE
United States Patent and Trademark Office
Address: COMMISSIONER FOR PATENTS
P.O. Box 1450
Alexandria, Virginia 22313-1450
www.uspto.gov

APPLICATION NO.	FILING DATE	FIRST NAMED INVENTOR	ATTORNEY DOCKET NO.	CONFIRMATION NO.
13/027,196	02/14/2011	Roy Edward McAlister	695459004US	6354

25096 7590 05/31/2011
PERKINS COIE LLP
PATENT-SEA
P.O. BOX 1247
SEATTLE, WA 98111-1247

EXAMINER

ART UNIT	PAPER NUMBER
1632	

NOTIFICATION DATE	DELIVERY MODE
05/31/2011	ELECTRONIC

Please find below and/or attached an Office communication concerning this application or proceeding.

The time period for reply, if any, is set in the attached communication.

Notice of the Office communication was sent electronically on above-indicated "Notification Date" to the following e-mail address(es):

patentprocurement@perkinscoie.com

UNITED STATES PATENT AND TRADEMARK OFFICE

Commissioner for Patents
United States Patent and Trademark Office
P.O. Box 1450
Alexandria, VA 22313-1450
www.uspto.gov

MAY 3 1 2011

PERKINS COIE LLP
PATENT-SEA
P.O. BOX 1247
SEATTLE WA 98111-1247

In re Application of	:	
MCALISTER, Roy *et al.*	:	DECISION ON PETITION
Application No. 13/027196	:	TO MAKE SPECIAL UNDER
Filed: February 14, 2011	:	THE GREEN TECHNOLOGY
Attorney Docket No. 695459004US	:	PILOT PROGRAM

This is a decision on the petition under 37 CFR 1.102, filed May 3rd, 2011, to make the above-identified application special under the pilot program for applications pertaining to Green Technologies as set forth in 74 Federal Register Notice 64666 (December 8, 2009) and amended by 75 Federal Register Notice 28554 (May 21, 2010) and 75 Federal Register Notice 69049 (November 10, 2010).

The petition is **GRANTED**.

A grantable petition to make an application special under 37 CFR 1.102 and the pilot program as set forth in 74 FR 64666 must be directed to a nonprovisional application filed under 35 USC 111(a) or be a national stage entry under 35 USC 371, exclusive of any reissue applications.

In order to qualify for special status, the following requirements must be met. 1) The application must have no more than 3 independent claims and no more than 20 total claims. 2) The application must not contain any multiple dependent claims. 3) The petition must state the basis for seeking special status, i.e., the claimed invention either: A) materially enhances the quality of the environment or B) materially contributes to: i) the discovery or development of renewable energy resources, ii) the more efficient utilization and conservation of energy resources, or iii) greenhouse gas emission reduction. 4) If the disclosure is not clear on its face that the claimed invention materially contributes under category (A) or (B), the petition must be accompanied by a statement by the applicant, assignee, or an attorney/agent registered to practice before the Office explaining how the materiality standard is met. 5) A statement that applicant will agree to make an election without traverse in a telephonic interview if a restriction requirement is made by the examiner. 6) The petition to make special must be filed electronically. 7) The petition must be filed at least one day prior to the date that a first Office Action appears in the Patent Application Information Retrieval (PAIR) system. 8) The petition must be accompanied by a request for early publication in compliance with 37 CFR 1.219 and include the publication fee as set forth in 37 CFR 1.18(d).

The requirement for a fee for consideration of the petition to make special for applications pertaining to Green Technologies has been waived.

The instant petition complies with items 1 – 8 above. Accordingly, the above-identified application has been accorded "special" status.

Telephone inquires concerning this decision should be directed to Manjunath Rao at 571-272-0939.

The application is being forwarded to the Technology Center Art Unit 1632 for action on the merits commensurate with this decision.

/Manjunath Rao/

Manjunath Rao
Supervisory Patent Examiner &
POC for TC 1600 Green Tech Petitions
Technology Center 1600

Doc Code: PET.GREEN
Document Description: Petition for Green Tech Pilot

PTO/SB/420 (11-10)
Approved for use through 01/31/2011. OMB 0651-0062
U.S. Patent and Trademark Office; U.S. DEPARTMENT OF COMMERCE
Under the Paperwork Reduction Act of 1995, no persons are required to respond to a collection of information unless it displays a valid OMB control number.

PETITION TO MAKE SPECIAL UNDER THE GREEN TECHNOLOGY PILOT PROGRAM

Attorney Docket Number:	695459102US	Application Number (if known): 13/027,197- Conf. #6355	Filing date: February 14, 2011
First Named Inventor:	Roy E. McAlister, P.E.		
Title:	MULTI-PURPOSE RENEWABLE FUEL FOR ISOLATING CONTAMINANTS AND STORING ENERGY		

APPLICANT HEREBY REQUESTS TO PARTICIPATE IN THE GREEN TECHNOLOGY PILOT PROGRAM FOR THE ABOVE-IDENTIFIED APPLICATION. See Instruction Sheet on page 2.

This petition must be timely filed electronically using the USPTO electronic filing system, EFS-Web.

1. By filing this petition:

   Applicant is requesting early publication: Applicant hereby requests early publication under 37 CFR 1.219 and the publication fee set forth in 37 CFR 1.18(d) accompanies this request.

2. By filing this petition: applicant is agreeing to make an election without traverse in a telephonic interview and elect an invention that meets the eligibility requirements for the Green Technology Pilot Program, if the Office determines that the claims are not obviously directed to a single invention. See Instruction Sheet.

3. This request is accompanied by statements of special status for the eligibility requirement.

4. The application contains no more than three (3) independent claims and twenty (20) total claims.

5. The application does not contain any multiple dependent claims.

6. Other attachments: Statement in Support of Petition

Signature		Date	5.3.11
Name (Print/Typed)	Susan D. Betcher	Registration Number	43,498

Note: Signatures of all the inventors or assignees of record of the entire interest or their representative(s) are required in accordance with 37 CFR 1.33 and 11.18. Please see 37 CFR 1.4(d) for the form of the signature. If necessary, submit multiple forms if more than one signature, see below.*

☐ *Total of 1 forms are submitted.

Docket No.: 695459102US
(PATENT)

IN THE UNITED STATES PATENT AND TRADEMARK OFFICE

In re Patent Application of:
Roy E. McAlister, P.E.

Application No.: 13/027,197

Confirmation No.: 6355

Filed: February 14, 2011

Art Unit: 1771

For: MULTI-PURPOSE RENEWABLE FUEL FOR ISOLATING CONTAMINANTS AND STORING ENERGY

Examiner: Not Yet Assigned

STATEMENT IN SUPPORT OF PETITION TO MAKE SPECIAL

MS Missing Parts
Commissioner for Patents
P.O. Box 1450
Alexandria, VA 22313-1450

Sir:

This paper is filed in support of the Petition to Make Special under the Green Technology Pilot Program filed concurrently herewith.

Petitioner hereby states that the referenced application is directed to a single invention that materially enhances the quality of the environment, or that materially contributes to: (1) the discovery or development of renewable energy resources; (2) the more efficient utilization and conservation of energy resources; or (3) green house gas emission reduction.

More specifically, the specification and claims are directed to the more efficient utilization and conservation of energy resources using a method of producing renewable multi-purpose fuel for isolating contaminants, storing energy and reducing green house gas emissions.

In light of the above, it is requested that the Petition to Make Special under the Green Technology Pilot Program be granted.

Applicant believes no fee is due with this response. However, if a fee is due, please charge our Deposit Account No. 50-0665, under Order No. 695459102US from which the undersigned is authorized to draw.

Dated: 5.3.11

Respectfully submitted,

By_____

Susan D. Betcher
Registration No.: 43,498
PERKINS COIE LLP
P.O. Box 1247
Seattle, Washington 98111-1247
(206) 359-8000
(206) 359-7198 (Fax)
Attorney for Applicant

UNITED STATES PATENT AND TRADEMARK OFFICE

UNITED STATES DEPARTMENT OF COMMERCE
United States Patent and Trademark Office
Address: COMMISSIONER FOR PATENTS
P.O. Box 1450
Alexandria, Virginia 22313-1450
www.uspto.gov

APPLICATION NO.	FILING DATE	FIRST NAMED INVENTOR	ATTORNEY DOCKET NO.	CONFIRMATION NO.
13/027,197	02/14/2011	Roy Edward McAlister	695459102US	6355

25096 7590 05/26/2011
PERKINS COIE LLP
PATENT-SEA
P.O. BOX 1247
SEATTLE, WA 98111-1247

EXAMINER

ART UNIT	PAPER NUMBER
1771	

NOTIFICATION DATE	DELIVERY MODE
05/26/2011	ELECTRONIC

Please find below and/or attached an Office communication concerning this application or proceeding.

The time period for reply, if any, is set in the attached communication.

Notice of the Office communication was sent electronically on above-indicated "Notification Date" to the following e-mail address(es):

patentprocurement@perkinscoie.com

UNITED STATES PATENT AND TRADEMARK OFFICE

Commissioner for Patents
United States Patent and Trademark Office
P.O. Box 1450
Alexandria, VA 22313-1450
www.uspto.gov

PERKINS COIE LLP
PATENT-SEA
P.O. BOX 1247
SEATTLE WA 98111-1247

5/26/11

In re Application of	:	
McAlister	:	DECISION ON PETITION
Application No. 13/027,197	:	TO MAKE SPECIAL UNDER
Filed: 2/14/2011	:	THE GREEN TECHNOLOGY
Attorney Docket No. **695459102US**	:	PILOT PROGRAM

This is a decision on the petition under 37 CFR 1.102, filed 5/3/2011, to make the above-identified application special under the pilot program for applications pertaining to Green Technologies as set forth in 74 Federal Register Notice 64666 (December 8, 2009) and amended by 75 Federal Register Notice 28554 (May 21, 2010) and 75 Federal Register Notice 69049 (November 10, 2010).

The petition is **GRANTED**.

A grantable petition to make an application special under 37 CFR 1.102 and the pilot program as set forth in 74 FR 64666 must be directed to a nonprovisional application filed under 35 USC 111(a) or be a national stage entry under 35 USC 371, exclusive of any reissue applications.

In order to qualify for special status, the following requirements must be met. 1) The application must have no more than 3 independent claims and no more than 20 total claims. 2) The application must not contain any multiple dependent claims. 3) The petition must state the basis for seeking special status, i.e., the claimed invention either: A) materially enhances the quality of the environment or B) materially contributes to: i) the discovery or development of renewable energy resources, ii) the more efficient utilization and conservation of energy resources, or iii) greenhouse gas emission reduction. 4) If the disclosure is not clear on its face that the claimed invention materially contributes under category (A) or (B), the petition must be accompanied by a statement by the applicant, assignee, or an attorney/agent registered to practice before the Office explaining how the materiality standard is met. 5) A statement that applicant will agree to make an election without traverse in a telephonic interview if a restriction requirement is made by the examiner. 6) The petition to make special must be filed electronically. 7) The petition must be filed at least one day prior to the date that a first Office Action appears in the Patent Application Information Retrieval (PAIR) system. 8) The petition must be accompanied by a

request for early publication in compliance with 37 CFR 1.219 and include the publication fee as set forth in 37 CFR 1.18(d).

The requirement for a fee for consideration of the petition to make special for applications pertaining to Green Technologies has been waived.

The instant petition complies with items 1 – 8 above. Accordingly, the above-identified application has been accorded "special" status.

Telephone inquires concerning this decision should be directed to Tom Dunn at 571-272-1171.

The application is being forwarded to the Technology Center Art Unit 1771 for action on the merits commensurate with this decision.

/Tom Dunn/

Tom Dunn
Quality Assurance Specialist
Technology Center 1700

Doc Code: PET.GREEN
Document Description: Petition for Green Tech Pilot

PTO/SB/420 (11-10)
Approved for use through 01/31/2011. OMB 0651-0062
U.S. Patent and Trademark Office; U.S. DEPARTMENT OF COMMERCE
Under the Paperwork Reduction Act of 1995, no persons are required to respond to a collection of information unless it displays a valid OMB control number.

PETITION TO MAKE SPECIAL UNDER THE GREEN TECHNOLOGY PILOT PROGRAM

Attorney Docket Number:	695458611US	Application Number (if known): 13/027,198- Conf. #6357	Filing date: February 14, 2011
First Named Inventor:	Roy E. McAlister, P.E.		
Title:	COUPLED THERMOCHEMICAL REACTORS AND ENGINES, AND ASSOCIATED SYSTEMS AND METHODS		

APPLICANT HEREBY REQUESTS TO PARTICIPATE IN THE GREEN TECHNOLOGY PILOT PROGRAM FOR THE ABOVE-IDENTIFIED APPLICATION. See Instruction Sheet on page 2.

This petition must be timely filed electronically using the USPTO electronic filing system, EFS-Web.

1. By filing this petition:

   Applicant is requesting early publication: Applicant hereby requests early publication under 37 CFR 1.219 and the publication fee set forth in 37 CFR 1.18(d) accompanies this request.

2. By filing this petition: applicant is agreeing to make an election without traverse in a telephonic interview and elect an invention that meets the eligibility requirements for the Green Technology Pilot Program, if the Office determines that the claims are not obviously directed to a single invention. See Instruction Sheet.

3. This request is accompanied by statements of special status for the eligibility requirement.

4. The application contains no more than three (3) independent claims and twenty (20) total claims.

5. The application does not contain any multiple dependent claims.

6. Other attachments: Statement in Support of Petition

Signature		Date	5.31.11
Name (Print/Typed)	Susan D. Betchek	Registration Number	43,498

Note: Signatures of all the inventors or assignees of record of the entire interest or their representative(s) are required in accordance with 37 CFR 1.33 and 11.18. Please see 37 CFR 1.4(d) for the form of the signature. If necessary, submit multiple forms if more than one signature, see below.*

☐ *Total of 1 forms are submitted.

Docket No.: 695458611US
(PATENT)

IN THE UNITED STATES PATENT AND TRADEMARK OFFICE

In re Patent Application of:
Roy E. McAlister, P.E.

Application No.: 13/027,198

Confirmation No.: 6357

Filed: February 14, 2011

Art Unit: 1621

For: COUPLED THERMOCHEMICAL REACTORS AND ENGINES, AND ASSOCIATED SYSTEMS AND METHODS

Examiner: Not Yet Assigned

STATEMENT IN SUPPORT OF PETITION TO MAKE SPECIAL

MS Missing Parts
Commissioner for Patents
P.O. Box 1450
Alexandria, VA 22313-1450

Sir:

This paper is filed in support of the Petition to Make Special under the Green Technology Pilot Program filed concurrently herewith.

Petitioner hereby states that the referenced application is directed to a single invention that materially enhances the quality of the environment, or that materially contributes to: (1) the discovery or development of renewable energy resources; (2) the more efficient utilization and conservation of energy resources; or (3) green house gas emission reduction.

More specifically, the specification and claims are directed to a chemical reactor coupled to an engine for more efficient utilization and conservation of energy resources.

In light of the above, it is requested that the Petition to Make Special under the Green Technology Pilot Program be granted.

Applicant believes no fee is due with this response. However, if a fee is due, please charge our Deposit Account No. 50-0665, under Order No. 695458611US from which the undersigned is authorized to draw.

Dated: 5.31.11

Respectfully submitted,

By _____

Susan D. Betcher
Registration No.: 43,498
PERKINS COIE LLP
P.O. Box 1247
Seattle, Washington 98111-1247
(206) 359-6088
(206) 359-9000 (Fax)
Attorney for Applicant

UNITED STATES PATENT AND TRADEMARK OFFICE

UNITED STATES DEPARTMENT OF COMMERCE
United States Patent and Trademark Office
Address: COMMISSIONER FOR PATENTS
P.O. Box 1450
Alexandria, Virginia 22313-1450
www.uspto.gov

APPLICATION NO.	FILING DATE	FIRST NAMED INVENTOR	ATTORNEY DOCKET NO.	CONFIRMATION NO.
13/027,198	02/14/2011	Roy Edward McAlister	695458611US	6357

25096 7590 07/07/2011
PERKINS COIE LLP
PATENT-SEA
P.O. BOX 1247
SEATTLE, WA 98111-1247

EXAMINER

ART UNIT	PAPER NUMBER
3747	

NOTIFICATION DATE	DELIVERY MODE
07/07/2011	ELECTRONIC

Please find below and/or attached an Office communication concerning this application or proceeding.

The time period for reply, if any, is set in the attached communication.

Notice of the Office communication was sent electronically on above-indicated "Notification Date" to the following e-mail address(es):

patentprocurement@perkinscoie.com

UNITED STATES PATENT AND TRADEMARK OFFICE

Commissioner for Patents
United States Patent and Trademark Office
P.O. Box 1450
Alexandria, VA 22313-1450
www.uspto.gov

PERKINS COIE LLP
PATENT-SEA
P.O. BOX 1247
SEATTLE WA 98111-1247

In re Application of	:	
MCALISTER, ROY EDWARD	:	DECISION ON PETITION
Application No. 13/027198	:	TO MAKE SPECIAL UNDER
Filed: February 14, 2011	:	THE GREEN TECHNOLOGY
Attorney Docket No. 695458611US	:	PILOT PROGRAM

This is a decision on the petition under 37 CFR 1.102, filed May 31, 2011, to make the above-identified application special under the pilot program for applications pertaining to Green Technologies as set forth in 74 Federal Register Notice 64666 (December 8, 2009) and amended by 75 Federal Register Notice 28554 (May 21, 2010) and 75 Federal Register Notice 69049 (November 10, 2010).

The petition is **dismissed**.

A grantable petition to make an application special under 37 CFR 1.102 and the pilot program as set forth in 74 FR 64666 must be directed to a nonprovisional application filed under 35 USC 111(a) or be a national stage entry under 35 USC 371, exclusive of any reissue applications.

If reconsideration of this decision is desired, a petition for reconsideration must be filed within ONE (1) MONTH OR THIRTY (30) DAYS from the mail date of this decision, whichever is longer. No extension of this time limit can be granted under 37 CFR 1.136(a) or (b). The petition for reconsideration should include an exhaustive attempt to provide the lacking item(s) noted below, since, after a decision on the petition for reconsideration, no further reconsideration or review of the matter will be undertaken by the Director.

In order to qualify for special status, the following requirements must be met. 1) The application must have no more than 3 independent claims and no more than 20 total claims. 2) The application must not contain any multiple dependent claims. 3) The petition must state the basis for seeking special status, i.e., the claimed invention either: A) materially enhances the quality of the environment or B) materially contributes to: i) the discovery or development of renewable energy resources, ii) the more efficient utilization and conservation of energy resources, or iii) greenhouse gas emission reduction. 4) If the disclosure is not clear on its face that the claimed

invention materially contributes under category (A) or (B), the petition must be accompanied by a statement by the applicant, assignee, or an attorney/agent registered to practice before the Office explaining how the materiality standard is met. 5) A statement that applicant will agree to make an election without traverse in a telephonic interview if a restriction requirement is made by the examiner. 6) The petition to make special must be filed electronically. 7) The petition must be filed at least one day prior to the date that a first Office Action appears in the Patent Application Information Retrieval (PAIR) system. 8) The petition must be accompanied by a request for early publication in compliance with 37 CFR 1.219 and include the publication fee as set forth in 37 CFR 1.18(d).

The requirement for a fee for consideration of the petition to make special for applications pertaining to Green Technologies has been waived. The petition lacks item #4.

In regard to item 4, petitioner should note that the instant petition includes a statement identifying the basis for the special status (i.e., whether the instant invention (1) materially enhances the quality of the environment or materially contributes to (2) the discovery or development of renewable energy sources or (3) more efficient utilization or conservation of energy resources or (4) greenhouse gas reduction) as required by sections II and III of the notice. Petitioner indicates that the basis for special status is that the claimed invention is on (2), (3), and (4) above. However, as stated in the notice, petitioner must also provide a statement pertaining to the materiality standard if the application disclosure is not clear on its face as to the materiality of the basis for the special status of the invention. The petitioner does not explain how the coupled thermochemical reactors and engines satisfy any of the bases for special status. Thus, this petition lacks such a statement and it is not agreed that the application on its face meets that materiality standard.

Any reconsideration of this decision should be submitted through the USPTO electronic filing system, EFS-Web, and selecting the document description of "Petition for Green Tech Pilot" on the EFS-Web screen.

Telephone inquiries concerning this decision should be directed to Henry C. Yuen at 571-272-4856. This application is currently undergoing pre-examination processing. Upon completion, the application will be forwarded to the Technology Center Art Unit 3747 for action in its regular turn.

/Henry C. Yuen/

Henry C. Yuen
Quality Assurance Specialist
Technology Center TC 3700

Docket No.: 695458611US
(PATENT)

IN THE UNITED STATES PATENT AND TRADEMARK OFFICE

In re Patent Application of:
Roy E. McAlister, P.E.

Application No.: 13/027,198

Confirmation No.: 6357

Filed: February 14, 2011

Art Unit: 3747

For: COUPLED THERMOCHEMICAL REACTORS AND ENGINES, AND ASSOCIATED SYSTEMS AND METHODS

Examiner: Not Yet Assigned

RENEWED PETITION TO MAKE SPECIAL UNDER THE GREEN TECHNOLOGY PILOT PROGRAM

Commissioner for Patents
P.O. Box 1450
Alexandria, VA 22313-1450

Sir:

This is a renewed petition under 37 CFR 1.102 to make the present application special under the pilot program for applications pertaining to Green Technologies as set forth in 74 Federal Register Notice 64666 (December 8, 2009). This petition was previously filed on May 31, 2011 but was dismissed in the Decision on Petition to Make Special under the Green Technology Pilot Program mailed July 7, 2011.

In the Decision, the Office of Petitions alleged that the following requirements were not met in the Petition as filed on May 31, 2011:

4. If the disclosure is not clear on its face that the claims invention materially contributes under category (A) or (B), the petition must be accompanied by the applicant, assignee, or an attorney/agent registered to practice before the Office explaining how the materiality standard is met.

Regarding requirement 4, petitioner hereby states that the instant invention (1) materially enhances the quality of the environment or materially contributes to (2) development of renewable energy resources or energy conservation, or (2) greenhouse gas reduction.

More specifically, the specification and claims are directed to materially enhancing the quality of the environment and materially reducing green house gas emissions by coupling a thermochemical reactor to an engine for more efficient utilization and conservation of energy resources.

In support of this statement, the Office of Petitions is directed to claim 20:

20. A method for operating an engine and a chemical reactor, comprising:

directing methane into a reaction zone of a reactor vessel;

combusting a hydrocarbon fuel in an internal combustion engine to produce power and combustion products, the combustion products including water and radiant energy;

directing the combustion products through a transfer passage coupled between the engine and the reaction zone to transfer to the reaction zone (a) a first portion of the water in the form of steam, and (b) radiant energy;

dissociating the methane to produce hydrogen and carbon monoxide in the reaction zone;

removing the hydrogen, carbon monoxide and water from the reaction zone;

separating at least a portion of the water from the hydrogen and carbon monoxide;

directing a portion of the hydrogen and carbon monoxide to the internal combustion engine for combustion; and

directing at least some of the water separated from the hydrogen and carbon monoxide to the internal combustion engine to cool the internal combustion engine.

If the Office of Petitions has further questions or clarifications, the Office of Petitions is invited to contact Susan Betcher at (206) 359-6088 to resolve any questions and allow this Green Technology Petition to move forward in a timely fashion.

Petitioner believes no fee is due with this response. However, if a fee is due, please charge our Deposit Account No. 50-0665, under Order No. 695458611US from which the undersigned is authorized to draw.

Dated: August 8, 2011

Respectfully submitted,

By_____

Susan D. Betcher
Registration No.: 43,498
PERKINS COIE LLP
P.O. Box 1247
Seattle, Washington 98111-1247
(206) 359-8000
(206) 359-7198 (Fax)
Attorney for Applicant/Petitioner

UNITED STATES PATENT AND TRADEMARK OFFICE

UNITED STATES DEPARTMENT OF COMMERCE
United States Patent and Trademark Office
Address: COMMISSIONER FOR PATENTS
P.O. Box 1450
Alexandria, Virginia 22313-1450
www.uspto.gov

APPLICATION NO.	FILING DATE	FIRST NAMED INVENTOR	ATTORNEY DOCKET NO.	CONFIRMATION NO.
13/027,198	02/14/2011	Roy Edward McAlister	695458611US	6357

25096 7590 08/19/2011
PERKINS COIE LLP
PATENT-SEA
P.O. BOX 1247
SEATTLE, WA 98111-1247

EXAMINER

ART UNIT	PAPER NUMBER
3747	

NOTIFICATION DATE	DELIVERY MODE
08/19/2011	ELECTRONIC

Please find below and/or attached an Office communication concerning this application or proceeding.

The time period for reply, if any, is set in the attached communication.

Notice of the Office communication was sent electronically on above-indicated "Notification Date" to the following e-mail address(es):

patentprocurement@perkinscoie.com

UNITED STATES PATENT AND TRADEMARK OFFICE

Commissioner for Patents
United States Patent and Trademark Office
P.O. Box 1450
Alexandria, VA 22313-1450
www.uspto.gov

PERKINS COIE LLP
PATENT-SEA
P.O. BOX 1247
SEATTLE WA 98111-1247

AUG 19 2011

In re Application of	:	
Roy E. McAlister	:	DECISION ON PETITION
Application No. 13/027,198	:	TO MAKE SPECIAL UNDER
Filed: February 14, 2011	:	THE GREEN TECHNOLOGY
Attorney Docket No. 695458611US	:	PILOT PROGRAM

This is a decision on the petition under 37 CFR 1.102, filed August 08, 2011, to make the above-identified application special under the pilot program for applications pertaining to Green Technologies as set forth in 74 Federal Register Notice 64666 (December 8, 2009) and amended by 75 Federal Register Notice 28554 (May 21, 2010) and 75 Federal Register Notice 69049 (November 10, 2010).

The petition is **GRANTED**.

A grantable petition to make an application special under 37 CFR 1.102 and the pilot program as set forth in 74 FR 64666 must be directed to a nonprovisional application filed under 35 USC 111(a) or be a national stage entry under 35 USC 371, exclusive of any reissue applications.

In order to qualify for special status, the following requirements must be met. 1) The application must have no more than 3 independent claims and no more than 20 total claims. 2) The application must not contain any multiple dependent claims. 3) The petition must state the basis for seeking special status, i.e., the claimed invention either: A) materially enhances the quality of the environment or B) materially contributes to: i) the discovery or development of renewable energy resources, ii) the more efficient utilization and conservation of energy resources, or iii) greenhouse gas emission reduction. 4) If the disclosure is not clear on its face that the claimed invention materially contributes under category (A) or (B), the petition must be accompanied by a statement by the applicant, assignee, or an attorney/agent registered to practice before the Office explaining how the materiality standard is met. 5) A statement that applicant will agree to make an election without traverse in a telephonic interview if a restriction requirement is made by the examiner. 6) The petition to make special must be filed electronically. 7) The petition must be filed at least one day prior to the date that a first Office Action appears in the Patent Application Information Retrieval (PAIR) system. 8) The petition must be accompanied by a request for early publication in compliance with 37 CFR 1.219 and include the publication fee as set forth in 37 CFR 1.18(d).

The requirement for a fee for consideration of the petition to make special for applications pertaining to Green Technologies has been waived.

The instant petition complies with items 1 – 8 above. Accordingly, the above-identified application has been accorded "special" status.

Telephone inquires concerning this decision should be directed to Blaine Copenheaver at 571-272-1156.

The application is being forwarded to the examiner for action on the merits commensurate with this decision.

/Blaine Copenheaver/

Blaine Copenheaver
Quality Assurance Specialist
Technology Center 1700

PTO/SB/20PCT-KR (08-10)
Approved for use through 01/31/2012. OMB 0651-0058
U.S. Patent and Trademark Office; U.S. DEPARTMENT OF COMMERCE

Under the Paperwork Reduction Act of 1995, no persons are required to respond to a collection of information unless it displays a valid OMB control number.

REQUEST FOR PARTICIPATION IN THE PATENT COOPERATION TREATY – PATENT PROSECUTION HIGHWAY (PCT-PPH) PILOT PROGRAM BETWEEN THE KOREAN INTELLECTUAL PROPERTY OFFICE (KIPO) AND THE USPTO

Application No.:	13/027,198-Conf. #6357	Filing Date:	February 14, 2011
First Named Inventor:	Roy E. McAlister, P.E.		
Title of the Invention:	COUPLED THERMOCHEMICAL REACTORS AND ENGINES, AND ASSOCIATED SYSTEMS AND METHODS		

THIS REQUEST FOR PARTICIPATION IN THE PCT-PPH PILOT PROGRAM ALONG WITH THE REQUIRED DOCUMENTS MUST BE SUBMITTED VIA EFS-WEB. INFORMATION REGARDING EFS-WEB IS AVAILABLE AT HTTP://WWW.USPTO.GOV/EBC/EFS_HELP.HTML.

APPLICANT HEREBY REQUESTS PARTICIPATION IN THE PCT-PPH PROGRAM AND PETITIONS TO MAKE THE ABOVE-IDENTIFIED APPLICATION SPECIAL UNDER THE PCT-PPH PROGRAM.

The above-identified application is (1) a national stage entry of the corresponding PCT application, or (2) a national stage entry of another PCT application which claims priority to the corresponding PCT application, or (3) a national application that claims domestic/ foreign priority to the corresponding PCT application, or (4) a national application which forms the basis for the priority claim in the corresponding PCT application, or (5) a continuing application of a U.S. application that satisfies one of (1) to (4) above, or (6) a U.S. application that claims domestic benefit to a U.S. provisional application which forms the basis for the priority claim in the corresponding PCT application.

The corresponding PCT application number(s) is/are: PCT/US11/24808

The international date of the corresponding PCT application(s) is/are: February 14, 2011

I. **List of Required Documents:**

a. **A copy of the latest international work product (WO/ISA, WO/IPEA, or IPER) in the above-identified corresponding PCT application(s).**

[x] Is attached.

[ ] Is not attached because the document is already in the U.S. application.

b. **A copy of all claims which were indicated as having novelty, inventive step and industrial applicability in the above-identified corresponding PCT appliction(s).**

[x] Is attached.

[ ] Is not attached because the document is already in the U.S. application.

c. **English translations of the documents in a. and b. above are attached (if the documents are not in the English language). A statement that the English translation is accurate is attached for the document in b. above.**

Under the Paperwork Reduction Act of 1995, no persons are required to respond to a collection of information unless it displays a valid OMB control number.

REQUEST FOR PARTICIPATION IN THE PCT-PPH PILOT PROGRAM BETWEEN THE KIPO AND THE USPTO
(continued)

Application No.:	13/027,198-Conf. #6357
First Named Inventor:	Roy E. McAlister, P.E.

d. **(1) An information disclosure statement listing the documents cited in the international work products (ISR, WO/ISA, WO/IPEA, IPER) of the corresponding PCT application.**

[x] Is attached.

[x] Has already been filed in the above-identified U.S. application on July 18, 2011

(2) Copies of all documents (except) for U.S. patents or U.S. patent application publications)

[x] Are attached.

[x] Have already been filed in the above-identified U.S. application on July 18, 2011

II. Claims Correspondence Table:

Claims in US Application	Patentable Claims in the corresponding PCT Application	Explanation regarding the correspondence
2-20	2-20	Claims 2-6 are amended by the Preliminary Amendment filed concurrently herewith. Claim 2 has been amended to incorporate the limitations of the base claim from which it depends but is otherwise identical to its corresponding claim in the PCT Application. Claims 3-6 have been amended to depend from claim 2 but are otherwise identical to their corresponding claims in the PCT Application. Claims 7-20 are identical to their corresponding claims in the PCT Application.

III. All the claims in the US application sufficiently correspond to the patentable claims in the corresponding PCT application.

Signature	[signature]	Date	Jan. 30, 2012
Name (Print/Typed)	John M. Wechkin	Registration Number	42,216

PCT/US2011/024808

PATENT COOPERATION TREATY

69545-8611.WO00
JMW/NK

From the INTERNATIONAL SEARCHING AUTHORITY

To:

WECHKIN JOHN M.

PERKINS COIE LLP P.O. BOX 1247 SEATTLE WA 98111-1247 USA

DOCKETED TO CPI
11-27-11
12-27-11
RDP

☒ Deadline
☐ Follow up
☐ Previously
☐ Abandoned
☐ Transferred
☐ Dedocketed

PATENT DOCKETING
OCT 01 2011
PERKINS COIE LLP

PCT

NOTIFICATION OF TRANSMITTAL OF THE INTERNATIONAL SEARCH REPORT AND THE WRITTEN OPINION OF THE INTERNATIONAL SEARCHING AUTHORITY, OR THE DECLARATION

(PCT Rule 44.1)

	Date of mailing *(day/month/year)* 27 SEPTEMBER 2011 (27.09.2011)
Applicant's or agent's file reference 69545861 1WO	**FOR FURTHER ACTION** See paragraphs 1 and 4 below
International application No. **PCT/US2011/024808**	International filing date *(day/month/year)* **14 FEBRUARY 2011 (14.02.2011)**
Applicant **MCALISTER, ROY EDWARD**	

1. ☒ The applicant is hereby notified that the international search report and the written opinion of the International Searching Authority have been established and are transmitted herewith.
Filing of amendments and statement under Article 19:
The applicant is entitled, if he so wishes, to amend the claims of the international application (see Rule 46).
When? The time limit for filing such amendments is normally two months from the date of transmittal of the international search report.
Where? Directly to the International Bureau of WIPO, 34 chemin des Colombettes 1211 Geneva 20, Switzerland, Facsimile No.: +41 22 338 82 70
For more detailed instructions, see *PCT Applicant's Guide*, International Phase, paragraphs 9.004 - 9.011.

2. ☐ The applicant is hereby notified that no international search report will be established and that the declaration under Article 17(2)(a) to that effect and the written opinion of the International Searching Authority are transmitted herewith.

3. ☐ **With regard to any protest** against payment of (an) additional fee(s) under Rule 40.2, the applicant is notified that:
☐ the protest together with the decision thereon has been transmitted to the International Bureau together with any request to forward the texts of both the protest and the decision thereon to the designated Offices.
☐ no decision has been made yet on the protest; the applicant will be notified as soon as a decision is made.

4. **Reminders**
The applicant may submit comments on an informal basis on the written opinion of the International Searching Authority to the International Bureau. The International Bureau will send a copy of such comments to all designated Offices unless an international preliminary examination report has been or is to be established. Following the expiration of 30 months from the priority date, these comments will also be made available to the public.

Shortly after the expiration of **18 months** from the priority date, the international application will be published by the International Bureau. If the applicant wishes to avoid or postpone publication, a notice of withdrawal of the international application, or of the priority claim, must reach the International Bureau before the completion of the technical preparations for international publication (Rules 90bis.1 and 90bis.3).

Within **19 months** from the priority date, but only in respect of some designated Offices, a demand for international preliminary examination must be filed if the applicant wishes to postpone the entry into the national phase **until 30 months** from the priority date (in some Offices even later); otherwise, the applicant must, **within 20 months** from the priority date, perform the prescribed acts for entry into the national phase before those designated Offices.
In respect of other designated Offices, the time limit of **30 months** (or later) will apply even if no demand is filed within 19months.

For details about the applicable time limits, Office by Office, see www.wipo.int/pct/en/texts/time_limits.html and the PCT Applicant's Guide, National Chapters.

Name and mailing address of the ISA/KR Korean Intellectual Property Office Government Complex-Daejeon, 189 Cheongsa-ro, Seo-gu, Daejeon 302-701, Republic of Korea Facsimile No. 82-42-472-7140	Authorized officer COMMISSIONER Telephone No. 82-42-481-8754

Form PCT/ISA/220 (July 2010)

* Attention

Copies of the documents cited in the international search report can be searched in the following Korean Intellectual Property Office English website for three months from the date of mailing of the international search report.

http://www.kipo.go.kr/en/ => PCT Services => PCT Services

ID : PCT international application number
PW : **GEQBXEP8**

Inquiries related to PCT International Search Report or Written Opinion prepared by KIPO as an International Searching Authority can be answered not only by KIPO but also through IPKC (Intellectual Property Korea Center), located in Vienna, VA, which functions as a PCT Help Desk for PCT applicants.

Homepage: http://www.ipkcenter.com
Email: ipkc@ipkcenter.com
Phone: +1 703 388 1066
Fax: +1 703 388 1084

PATENT COOPERATION TREATY

PCT

INTERNATIONAL SEARCH REPORT

(PCT Article 18 and Rules 43 and 44)

Applicant's or agent's file reference 695458611WO	FOR FURTHER ACTION	see Form PCT/ISA/220 as well as, where applicable, item 5 below.
International application No. **PCT/US2011/024808**	International filing date *(day/month/year)* **14 FEBRUARY 2011 (14.02.2011)**	(Earliest) Priority Date *(day/month/year)* 13 FEBRUARY 2010 (13.02.2010)
Applicant **MCALISTER, ROY EDWARD**		

This International search report has been prepared by this International Searching Authority and is transmitted to the applicant according to Article 18. A copy is being transmitted to the International Bureau.

This international search report consists of a total of 3 sheets.

☐ It is also accompanied by a copy of each prior art document cited in this report.

1. **Basis of the report**
   a. With regard to the language, the international search was carried out on the basis of:
      ☒ the international application in the language in which it was filed
      ☐ a translation of the international application into _____, which is the language of a translation furnished for the purposes of international search (Rules 12.3(a) and 23.1(b))
   b. ☐ This international search report has been established taking into account the **rectification of an obvious mistake** authorized by or notified to this Authority under Rule 91 (Rule 43.6*bis*(a)).
   c. ☐ With regard to any **nucleotide and/or amino acid sequence** disclosed in the international application, see Box No. I.
2. ☐ **Certain claims were found unsearchable** (See Box No. II)
3. ☐ **Unity of invention is lacking** (See Box No. III)
4. With regard to the **title**,
   ☒ the text is approved as submitted by the applicant.
   ☐ the text has been established by this Authority to read as follows:
5. With regard to the **abstract**,
   ☒ the text is approved as submitted by the applicant.
   ☐ the text has been established, according to Rule 38.2, by this Authority as it appears in Box No. IV. The applicant may, within one month from the date of mailing of this international search report, submit comments to this Authority.
6. With regard to the drawings,
   a. the figure of the drawings to be published with the abstract is Figure No. 2
      ☒ as suggested by the applicant.
      ☐ as selected by this Authority, because the applicant failed to suggest a figure.
      ☐ as selected by this Authority, because this figure better characterizes the invention.
   b. ☐ none of the figure is to be published with the abstract.

INTERNATIONAL SEARCH REPORT

International application No.
PCT/US2011/024808

A. CLASSIFICATION OF SUBJECT MATTER

F02M 27/06(2006.01)i, F02M 27/02(2006.01)i, F02B 51/02(2006.01)i, F02B 51/04(2006.01)i

According to International Patent Classification (IPC) or to both national classification and IPC

B. FIELDS SEARCHED

Minimum documentation searched (classification system followed by classification symbols)
F02M 27/06; C01B 3/26; F02B 43/08; C01B 3/38; F02M 27/02; F02D 19/08; B01J 7/00

Documentation searched other than minimum documentation to the extent that such documents are included in the fields searched
Korean utility models and applications for utility models
Japanese utility models and applications for utility models

Electronic data base consulted during the international search (name of data base and, where practicable, search terms used)
eKOMPASS(KIPO internal) & Keywords:fuel, reactor, hydrogen, engine

C. DOCUMENTS CONSIDERED TO BE RELEVANT

Category*	Citation of document, with indication, where appropriate, of the relevant passages	Relevant to claim No.
X	US 6,508,209 B1 (COLLIER, JR., R. KIRK) 21 January 2003 See column 4, line 63 - column 5, line 35; figure 1	1
A	See column 4, line 63 - column 5, line 35; figure 1	2-21
A	US 2007-0028860 A1 (HEMSATH, KLAUS H.) 08 February 2007 See paragraghs 0029 - 0032; figure 1	1-21
A	JP 2010-025031 A (TOYOTA MOTOR CORP) 04 February 2010 See paragraghs 0038-0040; figure 4	1-21
A	KR 10-0794943 B1 (TOYOTA JIDOSHA KABUSHIKI KAISHA) 15 January 2008 See paragraghs 0025-0059; figure 1	1-21
A	US 6,155,212 A (MCALISTER, ROY E.) 05 December 2000 See column 8, line 10 - column 25, line 2; figures 1,4,7,8	1-21

☐ Further documents are listed in the continuation of Box C. ☒ See patent family annex.

* Special categories of cited documents:
"A" document defining the general state of the art which is not considered to be of particular relevance
"E" earlier application or patent but published on or after the international filing date
"L" document which may throw doubts on priority claim(s) or which is cited to establish the publication date of citation or other special reason (as specified)
"O" document referring to an oral disclosure, use, exhibition or other means
"P" document published prior to the international filing date but later than the priority date claimed
"T" later document published after the international filing date or priority date and not in conflict with the application but cited to understand the principle or theory underlying the invention
"X" document of particular relevance; the claimed invention cannot be considered novel or cannot be considered to involve an inventive step when the document is taken alone
"Y" document of particular relevance; the claimed invention cannot be considered to involve an inventive step when the document is combined with one or more other such documents,such combination being obvious to a person skilled in the art
"&" document member of the same patent family

Date of the actual completion of the international search	Date of mailing of the international search report
26 SEPTEMBER 2011 (26.09.2011)	**27 SEPTEMBER 2011 (27.09.2011)**
Name and mailing address of the ISA/KR Korean Intellectual Property Office Government Complex-Daejeon, 189 Cheongsa-ro, Seo-gu, Daejeon 302-701, Republic of Korea Facsimile No. 82-42-472-7140	Authorized officer HAN Joong Sub Telephone No. 82-42-481-5478

Form PCT/ISA/210 (second sheet) (July 2009)

INTERNATIONAL SEARCH REPORT

Information on patent family members

International application No.
PCT/US2011/024808

Patent document cited in search report	Publication date	Patent family member(s)	Publication date
US 6508209 B1	21.01.2003	AU 2001-49282 A1	15.10.2001
		EP 1269006 A1	02.01.2003
		EP 1269006 B1	12.01.2005
		JP 2003-529717 A	07.10.2003
		US 6397790 B1	04.06.2002
		US 6405720 B1	18.06.2002
		WO 01-75294 A1	11.10.2001
US 2007-0028860 A1	08.02.2007	US 7293533 B2	13.11.2007
		WO 2007-018992 A2	15.02.2007
		WO 2007-018992 A3	12.07.2007
JP 2010-025031 A	04.02.2010	None	
KR 10-0794943 B1	15.01.2008	CN 101099032 A0	02.01.2008
		CN 101099032 B	18.08.2010
		EP 1735530 A1	27.12.2006
		EP 1735530 B1	08.08.2007
		JP 04-055737 B2	05.03.2008
		JP 2005-299497 A	27.10.2005
		US 2007-0151527 A1	05.07.2007
		US 7412947 B2	19.08.2008
		WO 2005-100766 A1	27.10.2005
US 06155212A A	05.12.2000	US 05343699A A	06.09.1994
		US 05394852A A	07.03.1995
		US 2003-0012985 A1	16.01.2003
		US 2011-0125391 A1	26.05.2011
		US 6446597 B1	10.09.2002
		US 6756140 B1	29.06.2004

PATENT COOPERATION TREATY

From the
INTERNATIONAL SEARCHING AUTHORITY

To:
WECHKIN JOHN M.

PERKINS COIE LLP P.O. BOX 1247 SEATTLE WA 98111-1247 USA

PCT

WRITTEN OPINION OF THE INTERNATIONAL SEARCHING AUTHORITY

(PCT Rule 43bis.1)

Date of mailing *(day/month/year)* **27 SEPTEMBER 2011 (27.09.2011)**

Applicant's or agent's file reference
695458611WO

FOR FURTHER ACTION
See paragraph 2 below

International application No.	International filing date *(day/month/year)*	Priority date *(day/month/year)*
PCT/US2011/024808	**14 FEBRUARY 2011 (14.02.2011)**	13 FEBRUARY 2010 (13.02.2010)

International Patent Classification (IPC) or both national classification and IPC

F02M 27/06(2006.01)i, F02M 27/02(2006.01)i, F02B 51/02(2006.01)i, F02B 51/04(2006.01)i

Applicant

MCALISTER, ROY EDWARD

1. This opinion contains indications relating to the following items:

- [x] Box No. I Basis of the opinion
- [ ] Box No. II Priority
- [ ] Box No. III Non-establishment of opinion with regard to novelty, inventive step and industrial applicability
- [ ] Box No. IV Lack of unity of invention
- [x] Box No. V Reasoned statement under Rule 43bis.1(a)(i) with regard to novelty, inventive step or industrial applicability; citations and explanations supporting such statement
- [ ] Box No. VI Certain documents cited
- [ ] Box No. VII Certain defects in the international application
- [ ] Box No. VIII Certain observations on the international application

2. **FURTHER ACTION**

If a demand for international preliminary examination is made, this opinion will be considered to be a written opinion of the International Preliminary Examining Authority ("IPEA") except that this does not apply where the applicant chooses an Authority other than this one to be the IPEA and the chosen IPEA has notified the International Bureau under Rule 66.1bis(b) that written opinions of this International Searching Authority will not be so considered.

If this opinion is, as provided above, considered to be a written opinion of the IPEA, the applicant is invited to submit to the IPEA a written reply together, where appropriate, with amendments, before the expiration of 3 months from the date of mailing of Form PCT/ISA/220 or before the expiration of 22 months from the priority date, whichever expires later.
For further options, see Form PCT/ISA/220.

Name and mailing address of the ISA/KR	Date of completion of this opinion	Authorized officer
Korean Intellectual Property Office Government Complex-Daejeon, 189 Cheongsa-ro, Seo-gu, Daejeon 302-701, Republic of Korea Facsimile No. 82-42-472-7140	26 SEPTEMBER 2011 (26.09.2011)	HAN Joong Sub Telephone No.82-42-481-5478

WRITTEN OPINION OF THE INTERNATIONAL SEARCHING AUTHORITY

International application No.
PCT/US2011/024808

Box No. I Basis of this opinion

1. With regard to the **language**, this opinion has been established on the basis of:

   [x] the international application in the language in which it was filed

   [ ] a translation of the international application into _____, which is the language of a translation furnished for the purposes of international search (Rules 12.3(a) and 23.1(b))

2. [ ] This opinion has been established taking into account the **rectification of an obvious mistake** authorized by or notified to this Authority under Rule 91 (Rule 43*bis*.1(a))

3. With regard to any **nucleotide and/or amino acid sequence** disclosed in the international application, this opinion has been established on the basis of:

   a. a sequence listing filed or furnished
      [ ] on paper
      [ ] in electronic form

   b. time of filing or furnishing
      [ ] contained in the international application as filed.
      [ ] filed together with the international application in electronic form.
      [ ] furnished subsequently to this Authority for the purposes of search.

4. [ ] In addition, in the case that more than one version or copy of a sequence listing has been filed or furnished, the required statements that the information in the subsequent or additioanl copies is identical to that in the application as filed or does not go beyond the application as filed, as appropriate, were furnished.

5. Additional comments:

WRITTEN OPINION OF THE INTERNATIONAL SEARCHING AUTHORITY

International application No.
PCT/US2011/024808

Box No. V Reasoned statement under Rule 43bis.1(a)(i) with regard to novelty, inventive step or industrial applicability; citations and explanations supporting such statement

1. Statement

Novelty (N)	Claims	2-21	YES
	Claims	1	NO
Inventive step (IS)	Claims	2-21	YES
	Claims	1	NO
Industrial applicability (IA)	Claims	1-21	YES
	Claims	NONE	NO

2. Citations and explanations :

Reference is made to the following documents:

D1: US 6,508,209 B1 (COLLIER, JR., R. KIRK) 21 January 2003
D2: US 2007-0028860 A1 (HEMSATH, KLAUS H.) 08 February 2007
D3: JP 2010-025031 A (TOYOTA MOTOR CORP) 04 February 2010
D4: KR 10-0794943 B1 (TOYOTA JIDOSHA KABUSHIKI KAISHA) 15 January 2008
D5: US 6,155,212 A (MCALISTER, ROY E.) 05 December 2000

1. Novelty and Inventive Step

D1, which is considered to represent the most relevant state of the art, discloses natural gas reforming system comprising a reactor(4), internal combustion engine(22), and lines(2, 14,16, 18, 20).

As all of the features of claim 1 are disclosed in D1, this claim is anticipated by D1. Therefore, claim 1 lacks novelty under PCT Article 33(2).

The subject matters of claim 2-7 are different from that of D1 in that a chemical reactor system includes a steam source, a transmision surface, a separator, a heater, and an insulation. In addition, these features are not disclosed in any other available prior art documents. Accordingly, claims 2-7 are not anticipated by any of the documents, nor is it obvious by the documents, taken alone or in combination. Therefore, claims 2-7 are novel and involves an inventive step under PCT Article 33(2) and (3).

The subject matter of claim 8 differs from these prior art documents in that a method for operating an engine and a chemical reactor includes 'dissociation products provide a non-hydrogen-based structural building block and a hydrogen-based fuel'. And it is not obvious to a person skilled in the art by the documents, taken alone or in combination. Therefore, claim 8 meets the requirements of PCT Article 33(2) and (3) with respect to novelty and inventive step.

Claims 9-18 are dependant on claim 8 and therefore meet the requirements of PCT Article 33(2) and (3).

(Continued on Supplemental Box)

Supplemental Box

In case the space in any of the preceding boxes is not sufficient.
Continuation of:

Box V

The subject matter of claim 19 differs from these prior art documents in that a method for opearating an engine and a chemical reactor includes 'removing the hydrogen, carbon monoxide and water from the reaction zone'. And it is not obvious to a person skilled in the art by the documents, taken alone or in combination. Therefore, claim 19 meets the requirements of PCT Article 33(2) and (3) with respect to novelty and inventive step.

Claims 20-21 are dependant on claim 19 and therefore meet the requirements of PCT Article 33(2) and (3).

2. Industrial Applicability
Claims 1-21 are industrially applicable under PCT Article 33(4).

(12) INTERNATIONAL APPLICATION PUBLISHED UNDER THE PATENT COOPERATION TREATY (PCT)

(19) World Intellectual Property Organization
International Bureau

(43) International Publication Date
18 August 2011 (18.08.2011)

PCT

(10) International Publication Number
WO 2011/100728 A2

(51) International Patent Classification:
F02M 27/06 (2006.01) *F02B 51/02* (2006.01)
F02M 27/02 (2006.01) *F02B 51/04* (2006.01)

(21) International Application Number:
PCT/US2011/024808

(22) International Filing Date:
14 February 2011 (14.02.2011)

(25) Filing Language: English

(26) Publication Language: English

(30) Priority Data:
61/304,403 13 February 2010 (13.02.2010) US
12/804,509 21 July 2010 (21.07.2010) US

(72) Inventor; and
(71) Applicant : **MCALISTER, Roy, Edward** [US/US]; 2350 W Shangri La, Phoenix, AZ 85029 (US).

(74) Agents: **WECHKIN, John, M** et al.; Perkins Coie LLP, P.O. Box 1247, Seattle, WA 98111-1247 (US).

(81) Designated States *(unless otherwise indicated, for every kind of national protection available)*: AE, AG, AL, AM, AO, AT, AU, AZ, BA, BB, BG, BH, BR, BW, BY, BZ, CA, CH, CL, CN, CO, CR, CU, CZ, DE, DK, DM, DO, DZ, EC, EE, EG, ES, FI, GB, GD, GE, GH, GM, GT, HN, HR, HU, ID, IL, IN, IS, JP, KE, KG, KM, KN, KP, KR, KZ, LA, LC, LK, LR, LS, LT, LU, LY, MA, MD, ME, MG, MK, MN, MW, MX, MY, MZ, NA, NG, NI, NO, NZ, OM, PE, PG, PH, PL, PT, RO, RS, RU, SC, SD, SE, SG, SK, SL, SM, ST, SV, SY, TH, TJ, TM, TN, TR, TT, TZ, UA, UG, US, UZ, VC, VN, ZA, ZM, ZW.

(84) Designated States *(unless otherwise indicated, for every kind of regional protection available)*: ARIPO (BW, GH, GM, KE, LR, LS, MW, MZ, NA, SD, SL, SZ, TZ, UG, ZM, ZW), Eurasian (AM, AZ, BY, KG, KZ, MD, RU, TJ, TM), European (AL, AT, BE, BG, CH, CY, CZ, DE, DK, EE, ES, FI, FR, GB, GR, HR, HU, IE, IS, IT, LT, LU, LV, MC, MK, MT, NL, NO, PL, PT, RO, RS, SE, SI, SK, SM, TR), OAPI (BF, BJ, CF, CG, CI, CM, GA, GN, GQ, GW, ML, MR, NE, SN, TD, TG).

Published:
— *without international search report and to be republished upon receipt of that report (Rule 48.2(g))*

(54) Title: COUPLED THERMOCHEMICAL REACTORS AND ENGINES, AND ASSOCIATED SYSTEMS AND METHODS

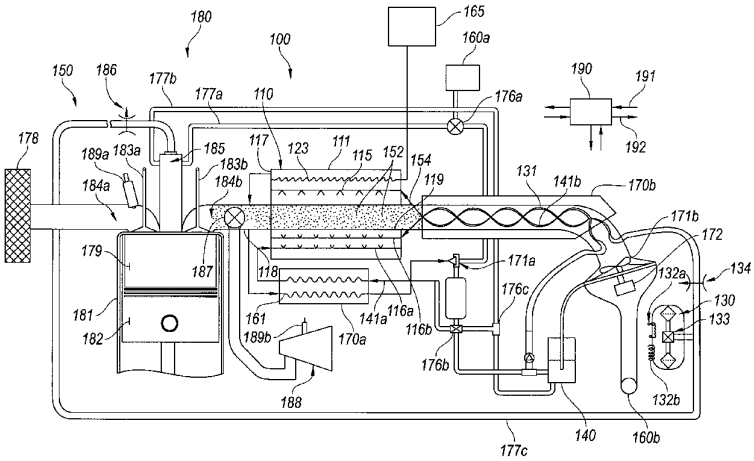

Fig. 2

(57) Abstract: Coupled thermal chemical reactors and engines, and associated systems and methods. A system in accordance with a particular embodiment includes a reactor vessel having a reaction zone, a hydrogen donor source coupled in fluid communication with the reaction zone, and an engine having a combustion region. The system can further include a transfer passage coupled between the combustion region and the reaction zone to transfer a reactant and/or radiate energy to the reaction zone. The system can further include a product passage coupled between the reaction zone and the combustion region of the engine to deliver to the combustion region at least a portion of a constituent removed from the reaction zone.

WO 2011/100728 A2

COUPLED THERMOCHEMICAL REACTORS AND ENGINES, AND ASSOCIATED SYSTEMS AND METHODS

CROSS-REFERENCE TO RELATED APPLICATIONS

[0001] The present application claims priority to and the benefit of U.S. Patent Application No. 61/304,403, filed on February 13, 2010 and titled FULL SPECTRUM ENERGY AND RESOURCE INDEPENDENCE. The present application is a continuation in part of U.S. Patent Application No. 12/804,509, filed on July 21, 2010 and titled METHOD AND SYSTEM OF THERMOCHEMICAL REGENERATION TO PROVIDE OXYGENATED FUEL, FOR EXAMPLE, WITH FUEL-COOLED FUEL INJECTORS, which claims priority to and the benefit of U.S. Provisional Application No. 61/237,425, filed August 27, 2009 and titled OXYGENATED FUEL PRODUCTION; U.S. Provisional Application No. 61/237,466, filed August 27, 2009 and titled MULTIFUEL MULTIBURST; U.S. Provisional Application No. 61/237,479, filed August 27, 2009 and titled FULL SPECTRUM ENERGY; PCT Application No. PCT/US09/67044, filed December 7, 2009 and titled INTEGRATED FUEL INJECTORS AND IGNITERS AND ASSOCIATED METHODS OF USE AND MANUFACTURE; U.S. Provisional Application No. 61/304,403, filed February 13, 2010 and titled FULL SPECTRUM ENERGY AND RESOURCE INDEPENDENCE; and U.S. Provisional Application No. 61/312,100, filed March 9, 2010 and titled SYSTEM AND METHOD FOR PROVIDING HIGH VOLTAGE RF SHIELDING, FOR EXAMPLE, FOR USE WITH A FUEL INJECTOR. U.S. Patent Application No. 12/804,509 is also a continuation-in-part of U.S. Patent Application No. 12/653,085, filed December 7, 2009 and titled INTEGRATED FUEL INJECTORS AND IGNITERS AND ASSOCIATED METHODS OF USE AND MANUFACTURE; which is a continuation-in-part of U.S. Patent Application No. 12/006,774 (now U.S. Patent No. 7,628,137), filed January 7, 2008 and titled MULTIFUEL STORAGE, METERING, AND IGNITION SYSTEM; and which claims priority to and the benefit of U.S. Provisional Application No. 61/237,466, filed August 27, 2009 and titled MULTIFUEL MULTIBURST. U.S. Patent Application No. 12/804,509 is also a continuation-in-part of U.S. Patent Application No. 12/581,825, filed

October 19, 2009 and titled MULTIFUEL STORAGE, METERING, AND IGNITION SYSTEM; which is a divisional of U.S. Patent Application No. 12/006,774 (now U.S. Patent No. 7,628,137), filed January 7, 2008 and titled MULTIFUEL STORAGE, METERING, AND IGNITION SYSTEM. Each of these applications is incorporated herein by reference in its entirety. To the extent the foregoing application and/or any other materials incorporated herein by reference conflict with the disclosure presented herein, the disclosure herein controls.

TECHNICAL FIELD

[0002] The present application is directed generally to coupled thermochemical reactors and engines, and associated systems and methods. In particular embodiments, such systems can be used to produce clean-burning, hydrogen-based fuels from a wide variety of feedstocks, and can produce structural building blocks (e.g., architectural constructs) from carbon and/or other elements that are released when forming the hydrogen-based fuels.

BACKGROUND

[0003] Renewable energy sources such as solar, wind, wave, falling water, and biomass-based sources have tremendous potential as significant energy sources, but currently suffer from a variety of problems that prohibit widespread adoption. For example, using renewable energy sources in the production of electricity is dependent on the availability of the sources, which can be intermittent. Solar energy is limited by the sun's availability (i.e., daytime only), wind energy is limited by the variability of wind, falling water energy is limited by droughts, and biomass energy is limited by seasonal variances, among other things. As a result of these and other factors, much of the energy from renewable sources, captured or not captured, tends to be wasted.

[0004] The foregoing inefficiencies associated with capturing and saving energy limit the growth of renewable energy sources into viable energy providers for many regions of the world, because they often lead to high costs of producing energy. Thus, the world continues to rely on oil and other fossil fuels as major energy sources because, at least in

part, government subsidies and other programs supporting technology developments associated with fossil fuels make it deceptively convenient and seemingly inexpensive to use such fuels. At the same time, the replacement cost for the expended resources, and the costs of environment degradation, health impacts, and other by-products of fossil fuel use are not included in the purchase price of the energy resulting from these fuels.

[0005] In light of the foregoing and other drawbacks currently associated with sustainably producing renewable resources, there remains a need for improving the efficiencies and commercial viabilities of producing products and fuels with such resources.

BRIEF DESCRIPTION OF THE DRAWINGS

[0006] Figure 1 is a partially schematic, partially cross-sectional illustration of a reactor system that receives energy from a combustion engine in accordance with an embodiment of the presently disclosed technology.

[0007] Figure 2 is a partially schematic, partially cross-sectional illustration of a reactor system that receives energy from a combustion engine and returns reaction products to the engine in accordance with an embodiment of the presently disclosed technology.

DETAILED DESCRIPTION

Overview

[0008] Several examples of devices, systems and methods for efficiently producing hydrogen fuels and structural materials are described below. The efficiencies can result from using waste heat produced by a combustion engine to heat the reactor, and by returning at least some reaction products to the engine for combustion or other purposes. The overall process can result in clean-burning fuel and re-purposed carbon and/or other constituents for use in durable goods, including polymers and carbon composites. Although the following description provides many specific details of the following examples in a manner sufficient to enable a person skilled in the relevant art to practice, make and

use them, several of the details and advantages described below may not be necessary to practice certain examples of the technology. Additionally, the technology may include other examples that are within the scope of the claims but are not described here in detail.

[0009] References throughout this specification to "one example," "an example," "one embodiment" or "an embodiment" mean that a particular feature, structure, process or characteristic described in connection with the example is included in at least one example of the present technology. Thus, the occurrences of the phrases "in one example," "in an example," "one embodiment" or "an embodiment" in various places throughout this specification are not necessarily all referring to the same example. Furthermore, the particular features, structures, routines, steps or characteristics may be combined in any suitable manner in one or more examples of the technology. The headings provided herein are for convenience only and are not intended to limit or interpret the scope or meaning of the claimed technology.

[0010] Certain embodiments of the technology described below may take the form of computer-executable instructions, including routines executed by a programmable computer or controller. Those skilled in the relevant art will appreciate that the technology can be practiced on computer or controller systems other than those shown and described below. The technology can be embodied in a special-purpose computer, controller, or data processor that is specifically programmed, configured or constructed to perform one or more of the computer-executable instructions described below. Accordingly, the terms “computer” and “controller” as generally used herein refer to any data processor and can include internet appliances, hand-held devices, multi-processor systems, programmable consumer electronics, network computers, mini-computers, and the like. The technology can also be practiced in distributed environments where tasks or modules are performed by remote processing devices that are linked through a communications network. Aspects of the technology described below may be stored or distributed on computer-readable media, including magnetic or optically readable or removable computer discs as well as media distributed electronically over networks. In particular embodiments, data structures and transmissions of data particular to aspects of the technology are also encompassed within the scope of the present technology. The present technology encompasses both

methods of programming computer-readable media to perform particular steps, as well as executing the steps.

[0011] A system in accordance with a particular embodiment of the technology includes a reactor vessel having a reaction zone, a hydrogen donor source coupled in fluid communication with the reaction zone, and an engine having a combustion region. The system can further include a transfer passage coupled between the combustion region and the reaction zone to transfer a reactant and/or radiant energy to the reaction zone. The system can still further include a product passage coupled between the reaction zone and the combustion region of the engine to deliver to the combustion region at least a portion of a constituent removed from the reaction zone. For example, in particular embodiments, the reactor can dissociate a hydrocarbon, such as methane, using waste heat from the combustion process to facilitate the dissociation process. At least some of the resulting hydrogen fuel, alone or in combination with carbon or a carbon compound, can be returned to the engine for combustion and/or other purposes.

[0012] A method in accordance with another embodiment of the technology includes directing a hydrogen donor into a reaction zone of a reactor vessel and combusting a fuel in an engine to produce power and exhaust products. The method can further include directing the exhaust products through a transfer passage coupled between the engine and the reaction zone to transfer a reactant and/or radiant energy to the reaction zone. The method can still further include dissociating the hydrogen donor into dissociation products at the reaction zone and, from the dissociation products, providing a non-hydrogen-based structural building block and/or a hydrogen-based fuel. The method can further include directing a portion of a constituent removed from the reaction zone to the engine. For example, in particular embodiments, the processes include dissociating methane into hydrogen and carbon monoxide, and returning portions of either or both to the engine, e.g., with a fuel constituent, for combustion.

Representative Reactor Systems

[0013] Figures 1 and 2 illustrate representative reactor systems for producing hydrogen-based fuels and structural building blocks or architectural constructs in

accordance with several embodiments of the technology. Figure 1 illustrates the general arrangement of a reactor that uses waste heat from a combustion process. Figure 2 illustrates further details of the reactor system, and illustrates mechanisms and arrangements by which the combustion engine and reactor can be coupled in a closed-loop fashion.

[0014] Figure 1 is a partially schematic illustration of a representative system 100 that includes a reactor 110. The reactor 110 further includes a reactor vessel 111 that encloses or partially encloses a reaction zone 112. In at least some instances, the reactor vessel 111 has one or more transmissive surfaces positioned to facilitate the chemical reaction taking place within the reaction zone 112. Suitable transmissive surfaces are disclosed in co-pending U.S. Application No. _____ titled "REACTOR VESSELS WITH TRANSMISSIVE SURFACES FOR PRODUCING HYDROGEN-BASED FUELS AND STRUCTURAL ELEMENTS, AND ASSOCIATED SYSTEMS AND METHODS" (Attorney Docket No. 69545.8602US) filed concurrently herewith and incorporated herein by reference. In a representative example, the reactor vessel 111 receives a hydrogen donor provided by a donor source 130 to a donor entry port 113. For example, the hydrogen donor can include methane or another hydrocarbon. A donor distributor or manifold 115 within the reactor vessel 111 disperses or distributes the hydrogen donor into the reaction zone 112. The reactor vessel 111 also receives steam from a steam/water source 140 via a steam entry port 114. A steam distributor 116 in the reactor vessel 111 distributes the steam into the reaction zone 112. The reactor vessel 111 can further include a heater 123 that supplies heat to the reaction zone 112 to facilitate endothermic reactions. The power for the heater (e.g., electrical power) can be provided by a renewable energy source 165. The renewable energy source 165 can include a solar, wind, water and/or other suitable sustainable sources. The reactions performed at the reaction zone 112 can include dissociating methane or another hydrocarbon into hydrogen or a hydrogen compound, and carbon or a carbon compound. In other embodiments, the reactor 110 can dissociate other hydrogen donors, e.g. nitrogenous hydrogen donors. Representative reactions are further described in co-pending U.S. Application No. _____ titled "CHEMICAL PROCESSES AND REACTORS FOR EFFICIENTLY PRODUCING HYDROGEN FUELS

AND STRUCTURAL MATERIALS, AND ASSOCIATED SYSTEMS AND METHODS" (Attorney Docket No. 69545.8601US), filed concurrently herewith and incorporated herein by reference. The products of the reaction exit the reactor vessel 111 via an exit port 117 and are collected at a reaction product collector 171a.

[0015] The system 100 can further include a source 150 of radiant energy (e.g., waste heat) and/or additional reactants, which provides constituents to a passage 118 within the reactor vessel 111. For example, the heat/reactant source 150 can include a combustion chamber 151 that provides hot combustion/exhaust products 152 to the passage 118, as indicated by arrow A. The combustion products 152 and associated waste heat are produced by a process separate from the dissociation process (e.g., a power generation process). A combustion products collector 171b collects combustion products exiting the reactor vessel 111 for further recycling and/or other uses. In a particular embodiment, the combustion products 152 can include hot carbon monoxide, water vapor, and/or other constituents. One or more transmissive surfaces 119 are positioned between the reaction zone 112 (which can be disposed annularly around the passage 118) and an interior region 120 of the passage 118. The transmissive surface 119 can accordingly allow radiant energy and/or a chemical constituent to pass radially outwardly from the passage 118 into the reaction zone 112, as indicated by arrows B. By delivering the radiant energy (e.g., heat) and/or chemical constituent(s) provided by the flow of combustion products 152, the system 100 can enhance the reaction taking place in the reaction zone 112, for example, by increasing the reaction zone temperature and/or pressure, and therefore the reaction rate, and/or the thermodynamic efficiency of the reaction. The foregoing process can accordingly recycle or reuse energy and/or constituents that would otherwise be wasted, in addition to facilitating the reaction at the reaction zone 112.

[0016] The composition and structure of the transmissive surface 119 can be selected to allow radiant energy to readily pass from the interior region 120 of the passage 118 to the reaction zone 112. Accordingly, the transmissive surface 119 can include glass, graphene, or a re-radiative component. Suitable re-radiative components are described further in co-pending U.S. Application No. _____ titled "CHEMICAL

REACTORS WITH RE-RADIATING SURFACES AND ASSOCIATED SYSTEMS AND METHODS" (Attorney Docket No. 69545.8603US), filed concurrently herewith and incorporated herein by reference.

[0017] As noted above, the combustion products 152 can include steam and/or other constituents that may serve as reactants in the reaction zone 112. Accordingly, the transmissive surface 119 can be manufactured to selectively allow such constituents into the reaction zone 112, in addition to or in lieu of admitting radiant energy into the reaction zone 112. In a particular embodiment, the transmissive surface 119 can be formed from a carbon crystal structure, for example, a layered graphene structure. The carbon-based crystal structure can include spacings (e.g., between parallel layers oriented transverse to the flow direction A) that are deliberately selected to allow water molecules to pass through. At the same time, the spacings can be selected to prevent useful reaction products produced in the reaction zone 112 from passing out of the reaction zone. In particular embodiments, the transmissive surface 119 can be formed by using the same type of architectural constructs produced or facilitated by the reactor 110.

[0018] The system 100 can further include a controller 190 that receives input signals 191 (e.g., from sensors) and provides output signals 192 (e.g., control instructions) based at least in part on the inputs 191. Accordingly, the controller 190 can include suitable processor, memory and I/O capabilities. The controller 190 can receive signals corresponding to measured or sensed pressures, temperatures, flow rates, chemical concentrations and/or other suitable parameters, and can issue instructions controlling reactant delivery rates, pressures and temperatures, heater activation, valve settings and/or other suitable actively controllable parameters. An operator can provide additional inputs to modify, adjust and/or override the instructions carried out autonomously by the controller 190.

[0019] Figure 2 is a partially schematic illustration of system 100 that includes a reactor 110 in combination with a radiant energy/reactant source 150 in accordance with another embodiment of the technology. In this embodiment, the radiant energy/reactant source 150 includes an engine 180, e.g., an internal combustion engine having a piston 182 that reciprocates within a cylinder 181. In other embodiments, the engine 180 can

have other configurations, for example, an external combustion configuration. In an embodiment shown in Figure 2, the engine 180 includes an intake port 184a that is opened and closed by an intake valve 183a to control air entering the cylinder 181 through an air filter 178. The air flow can be unthrottled in an embodiment shown in Figure 2, and can be throttled in other embodiments. A fuel injector 185 directs fuel into the combustion zone 179 where it mixes with the air and ignites to produce the combustion products 152. Additional fuel can be introduced by an injection valve 189a. The combustion products 152 exit the cylinder 181 via an exhaust port 184b controlled by an exhaust valve 183b. Further details of representative engines and ignition systems are disclosed in co-pending U.S. Application No. 12/653,085 (Attorney Docket No. 69545.8304US) filed on December 7, 2010, and incorporated herein by reference.

[0020] The engine 180 can include features specifically designed to integrate the operation of the engine with the operation of the reactor 110. For example, the engine 180 and the reactor 110 can share fuel from a common fuel source 130 which is described in further detail below. The fuel is provided to the fuel injector 185 via a regulator 186. The engine 180 can also receive end products from the reactor 110 via a first conduit or passage 177a, and water (e.g., liquid or steam) from the reactor 110 via a second conduit or passage 177b. Further aspects of these features are described in greater detail below, following a description of the other features of the overall system 100.

[0021] The system 100 shown in Figure 2 also includes heat exchangers and separators configured to transfer heat and segregate reaction products in accordance with the disclosed technology. In a particular aspect of this embodiment, the system 100 includes a steam/water source 140 that provides steam to the reactor vessel 111 to facilitate product formation. Steam from the steam/water source 140 can be provided to the reactor 110 via at least two channels. The first channel includes a first water path 141a that passes through a first heat exchanger 170a and into the reactor vessel 111 via a first steam distributor 116a. Products removed from the reactor vessel 111 pass through a reactor product exit port 117 and along a products path 161. The products path 161 passes through the first heat exchanger 170a in a counter-flow or counter-current manner to cool the products and heat the steam entering the reactor vessel 111. The products

continue to a reaction product separator 171a that segregates useful end products (e.g., hydrogen and carbon or carbon compounds). At least some of the products are then directed back to the engine 180, and other products are then collected at a products collector 160a. A first valve 176a regulates the product flow. Water remaining in the products path 161 can be separated at the reaction product separator 171a and returned to the steam/water source 140.

[0022] The second channel via which the steam/water source 140 provides steam to the reactor 110 includes a second water path 141b that passes through a second heat exchanger 170b. Water proceeding along the second water path 141b enters the reactor 110 in the form of steam via a second stream distributor 116b. This water is heated by combustion products that have exited the combustion zone 179 and passed through the transfer passage 118 (which can include a transmissive surface 119) along a combustion products path 154. The spent combustion products 152 are collected at a combustion products collector 160b and can include nitrogen compounds, phosphates, re-used illuminant additives (e.g., sources of sodium, magnesium and/or potassium), and/or other compositions that may be recycled or used for other purposes (e.g., agricultural purposes). The illuminant additives can be added to the combustion products 152 (and/or the fuel used by the engine 180) upstream of the reactor 110 to increase the amount of radiant energy available for transmission into the reaction zone 112.

[0023] In addition to heating water along the second water path 141b and cooling the combustion products along the combustion products path 154, the second heat exchanger 170b can heat the hydrogen donor passing along a donor path 131 to a donor distributor 115 located within the reactor vessel 111. The donor vessel 130 houses a hydrogen donor, e.g., a hydrocarbon such as methane, or a nitrogenous donor such as ammonia. The donor vessel 130 can include one or more heaters 132 (shown as first heater 132a and a second heater 132b) to vaporize and/or pressurize the hydrogen donor within. A three-way valve 133 and a regulator 134 control the amount of fluid and/or vapor that exits the donor vessel 130 and passes along the donor path 131 through the second heat exchanger 170b and into the reactor vessel 111. As discussed above, the hydrogen

donor can also serve as a fuel for the engine 180, in at least some embodiments, and can be delivered to the engine 180 via a third conduit or passage 177c.

[0024] In the reactor vessel 111, the combustion products 152 pass through the combustion products passage 118 while delivering radiant energy and/or reactants through the transmissive surface 119 into the reaction zone 112. After passing through the second heat exchanger 170b, the combustion products 152 can enter a combustion products separator 171b that separates water from the combustion products. The water returns to the steam/water source 140 and the remaining combustion products are collected at the combustion products collector 160b. In a particular embodiment, the separator 171b can include a centrifugal separator that is driven by the kinetic energy of the combustion product stream. If the kinetic energy of the combustion product stream is insufficient to separate the water by centrifugal force, a motor/generator 172 can add energy to the separator 171b to provide the necessary centrifugal force. If the kinetic energy of the combustion product stream is greater than is necessary to separate water, the motor/generator 172 can produce energy, e.g., to be used by other components of the system 100. The controller 190 receives inputs from the various elements of the system 100 and controls flow rates, pressures, temperatures, and/or other parameters.

[0025] The controller 190 can also control the return of reactor products to the engine 180. For example, the controller can direct reaction products and/or recaptured water back to the engine 180 via a series of valves. In a particular embodiment, the controller 190 can direct the operation of the first valve 176a which directs hydrogen and carbon monoxide obtained from the first separator 171a to the engine 180 via the first conduit 177a. These constituents can be burned in the combustion zone 179 to provide additional power from the engine 180. In some instances, it may be desirable to cool the combustion zone 179 and/or other elements of the engine 180 as shown. In such instances, the controller 190 can control a flow of water or steam to the engine 180 via second and third valves 176b, 176c and the corresponding second conduit 177b.

[0026] In some instances, it may be desirable to balance the energy provided to the reactor 110 with energy extracted from the engine 180 used for other proposes. According, the system 100 can included a proportioning valve 187 in the combustion

products stream that can direct some combustion products 152 to a power extraction device 188, for example, a turbo-alternator, turbocharger or a supercharger. When the power extraction device 188 includes a supercharger, it operates to compress air entering the engine cylinder 181 via the intake port 184a. When the extraction device 188 includes a turbocharger, it can include an additional fuel injection valve 189b that directs fuel into the mixture of combustion products for further combustion to produce additional power. This power can supplement the power provided by the engine 180, or it can be provided separately, e.g., via a separate electrical generator.

[0027] As is evident from the forgoing discussion, one feature of the system 100 is that it is specifically configured to conserve and reuse energy from the combustion products 152. Accordingly, the system 100 can include additional features that are designed to reduce energy losses from the combustion products 152. Such features can include insulation positioned around the cylinder 181, at the head of the piston 182, and/or at the ends of the valves 183a, 183b. Accordingly, the insulation prevents or at least restricts heat from being conveyed away from the engine 180 via any thermal channel other than the passage 118.

[0028] One feature of at least some of the foregoing embodiments is that the reactor system can include a reactor and an engine linked in an interdependent manner. In particular, the engine can provide waste heat that facilitates a dissociation process conducted at the reactor to produce a hydrogen-based fuel and a non-hydrogen based structural building block. The building block can include a molecule containing carbon, boron, nitrogen, silicon and/or sulfur, and can be used to form an architectural construct. Representative examples of architectural constructs, in addition to the polymers and composites described above are described in further detail in co-pending U.S. Application No. _____ titled "ARCHITECTURAL CONSTRUCT HAVING FOR EXAMPLE A PLURALITY OF ARCHITECTURAL CRYSTALS" (Attorney Docket No. 69545.8701) filed concurrently herewith and incorporated herein by reference. An advantage of this arrangement is that it can provide a synergy between the engine and the reactor. For example, the energy inputs normally required by the reactor to conduct the dissociation processes described above can be reduced by virtue of the additional energy provided by

the combustion product. The efficiency of the engine can be improved by adding clean-burning hydrogen to the combustion chamber, and/or by providing water (e.g., in steam or liquid form) for cooling the engine. Although both the steam and the hydrogen-based fuel are produced by the reactor, they can be delivered to the engine at different rates and/or can vary in accordance with different schedules and/or otherwise in different manners.

[0029] From the foregoing, it will appreciated that specific embodiments of the technology have been described herein for purposes of illustration, but that various modifications may be made without deviating from the technology. For example, certain embodiments of the processes described above were described in the context of methane. In other embodiments, other hydrocarbon fuels or non-carbon-containing hydrogen donors can undergo similar processes to form hydrogen-based fuels and architectural constructs. The waste heat provided by the engine can be supplemented by other waste heat sources, e.g., waste heat from regenerative braking, which can power the heater 123, or can be operatively coupled to the reactor 110 in other manners.

[0030] Certain aspects of the technology described in the context of particular embodiments may be combined or eliminated in other embodiments. For example, in some embodiments, the engine can receive hydrogen-based fuel, but not cooling water from the reactor 110, or vise versa. Further while advantages associated with certain embodiments of the technology have been described in the context of those embodiments, other embodiments may also exhibit such advantages, and not all embodiments need necessarily exhibit such advantages to fall within the scope of the present disclosure. Accordingly, the present disclosure and associated technology can encompass other embodiments not expressly shown or described herein.

[0031] To the extent not previously incorporated herein by reference, the present application incorporates by reference in their entirety the subject matter of each of the following materials: U.S. Patent Application No. 12/857,553, filed on August 16, 2010 and titled SUSTAINABLE ECONOMIC DEVELOPMENT THROUGH INTEGRATED PRODUCTION OF RENEWABLE ENERGY, MATERIALS RESOURCES, AND NUTRIENT REGIMES; U.S. Patent Application No. 12/857,553, filed on August 16, 2010 and titled SYSTEMS AND METHODS FOR SUSTAINABLE ECONOMIC DEVELOPMENT

THROUGH INTEGRATED FULL SPECTRUM PRODUCTION OF RENEWABLE ENERGY; U.S. Patent Application No. 12/857,554, filed on August 16, 2010 and titled SYSTEMS AND METHODS FOR SUSTAINABLE ECONOMIC DEVELOPMENT THROUGH INTEGRATED FULL SPECTRUM PRODUCTION OF RENEWABLE MATERIAL RESOURCES USING SOLAR THERMAL; U.S. Patent Application No. 12/857,502, filed on August 16, 2010 and titled ENERGY SYSTEM FOR DWELLING SUPPORT; Attorney Docket No. 69545-8505.US00, filed on February 14, 2011 and titled DELIVERY SYSTEMS WITH IN-LINE SELECTIVE EXTRACTION DEVICES AND ASSOCIATED METHODS OF OPERATION; U.S. Patent Application No. 61/401,699, filed on August 16, 2010 and titled COMPREHENSIVE COST MODELING OF AUTOGENOUS SYSTEMS AND PROCESSES FOR THE PRODUCTION OF ENERGY, MATERIAL RESOURCES AND NUTRIENT REGIMES; Attorney Docket No. 69545-8601.US00, filed on February 14, 2011 and titled CHEMICAL PROCESSES AND REACTORS FOR EFFICIENTLY PRODUCING HYDROGEN FUELS AND STRUCTURAL MATERIALS, AND ASSOCIATED SYSTEMS AND METHODS; Attorney Docket No. 69545-8602.US00, filed on February 14, 2011 and titled REACTOR VESSELS WITH TRANSMISSIVE SURFACES FOR PRODUCING HYDROGEN-BASED FUELS AND STRUCTURAL ELEMENTS, AND ASSOCIATED SYSTEMS AND METHODS; Attorney Docket No. 69545-8603.US00, filed on February 14, 2011 and titled CHEMICAL REACTORS WITH RE-RADIATING SURFACES AND ASSOCIATED SYSTEMS AND METHODS; Attorney Docket No. 69545-8604.US00, filed on February 14, 2011 and titled THERMAL TRANSFER DEVICE AND ASSOCIATED SYSTEMS AND METHODS; Attorney Docket No. 69545-8605.US00, filed on February 14, 2011 and titled CHEMICAL REACTORS WITH ANNULARLY POSITIONED DELIVERY AND REMOVAL DEVICES, AND ASSOCIATED SYSTEMS AND METHODS; Attorney Docket No. 69545-8606.US00, filed on February 14, 2011 and titled REACTORS FOR CONDUCTING THERMOCHEMICAL PROCESSES WITH SOLAR HEAT INPUT, AND ASSOCIATED SYSTEMS AND METHODS; Attorney Docket No. 69545-8608.US00, filed on February 14, 2011 and titled INDUCTION FOR THERMOCHEMICAL PROCESS, AND ASSOCIATED SYSTEMS AND METHODS; U.S. Patent Application No. 61/385,508, filed on September 22, 2010 and titled REDUCING AND HARVESTING DRAG ENERGY ON MOBILE ENGINES USING

THERMAL CHEMICAL REGENERATION; Attorney Docket No. 69545-8616.US00, filed on February 14, 2011 and titled REACTOR VESSELS WITH PRESSURE AND HEAT TRANSFER FEATURES FOR PRODUCING HYDROGEN-BASED FUELS AND STRUCTURAL ELEMENTS, AND ASSOCIATED SYSTEMS AND METHODS; Attorney Docket No. 69545-8701.US00, filed on February 14, 2011 and titled ARCHITECTURAL CONSTRUCT HAVING FOR EXAMPLE A PLURALITY OF ARCHITECTURAL CRYSTALS; U.S. Patent Application No. 12/806,634, filed on August 16, 2010 and titled METHODS AND APPARATUSES FOR DETECTION OF PROPERTIES OF FLUID CONVEYANCE SYSTEMS; Attorney Docket No. 69545-8801.US01, filed on February 14, 2011 and titled METHODS, DEVICES, AND SYSTEMS FOR DETECTING PROPERTIES OF TARGET SAMPLES; Attorney Docket No. 69545-9002.US00, filed on February 14, 2011 and titled SYSTEM FOR PROCESSING BIOMASS INTO HYDROCARBONS, ALCOHOL VAPORS, HYDROGEN, CARBON, ETC.; Attorney Docket No. 69545-9004.US00, filed on February 14, 2011 and titled CARBON RECYCLING AND REINVESTMENT USING THERMOCHEMICAL REGENERATION; Attorney Docket No. 69545-9006.US00, filed on February 14, 2011 and titled OXYGENATED FUEL; U.S. Patent Application No. 61/237,419, filed on August 27, 2009 and titled CARBON SEQUESTRATION; U.S. Patent Application No. 61/237,425, filed on August 27, 2009 and titled OXYGENATED FUEL PRODUCTION; Attorney Docket No. 69545-9102.US00, filed on February 14, 2011 and titled MULTI-PURPOSE RENEWABLE FUEL FOR ISOLATING CONTAMINANTS AND STORING ENERGY; U.S. Patent Application No. 61/421,189, filed on December 8, 2010 and titled LIQUID FUELS FROM HYDROGEN, OXIDES OF CARBON, AND/OR NITROGEN; AND PRODUCTION OF CARBON FOR MANUFACTURING DURABLE GOODS; and Attorney Docket No. 69545-9105.US00, filed on February 14, 2011 and titled ENGINEERED FUEL STORAGE, RESPECIATION AND TRANSPORT.

CLAIMS

I/We claim:

1. A chemical reactor system, comprising:

a reactor vessel having a reaction zone;

a hydrogen donor source coupled in fluid communication with the reaction zone of the reactor vessel;

an engine having a combustion region;

a transfer passage coupled between the combustion region and the reaction zone to transfer at least one of (a) a reactant and (b) radiant energy to the reaction zone; and

a product passage coupled between the reaction zone and the combustion region of the engine to deliver to the combustion region at least a portion of a constituent removed from the reaction zone.

2. The system of claim 1, further comprising a steam source coupled in fluid communication with the reaction zone.

3. The system of claim 1, further comprising a transmissive surface positioned between the reaction zone and an interior region of the transfer passage, the transmissive surface being transmissive to at least one of the reactant and the radiant energy.

4. The system of claim 1, further comprising a separator operably coupled between the reaction zone and the combustion region of the engine to separate constituents removed from the reaction zone.

5. The system of claim 1, further comprising a heater positioned in thermal communication with the reactor vessel to heat a reactant in the vessel.

6. The system of claim 1, further comprising insulation positioned to at least restrict heat transfer away from the engine, other than via the transfer passage.

7. The system of claim 6 wherein the insulation is positioned around a cylinder of the engine.

8. A method for operating an engine and a chemical reactor, comprising:
directing a hydrogen donor into a reaction zone of a reactor vessel;
combusting a fuel for an engine to produce power and combustion products;
directing the combustion products through a transfer passage coupled between the engine and the reaction zone to transfer at least one of (a) a reactant and (b) radiant energy to the reaction zone;
dissociating the hydrogen donor into dissociation products in the reaction zone;
from the dissociation products, providing:
(a) a non-hydrogen-based structural building block; and
(b) a hydrogen-based fuel; and
directing a constituent removed from the reaction zone to the engine.

9. The method of claim 8 wherein directing a hydrogen donor includes directing methane.

10. The method of claim 8 wherein directing a constituent removed from the reaction zone includes directing a portion of at least one of the non-hydrogen-based structural building block and the hydrogen-based fuel to the engine.

11. The method of claim 8 wherein combusting the fuel includes combusting fuel in an internal combustion engine.

12. The method of claim 8 wherein combusting the fuel includes combusting a fuel having a chemical composition the same as a chemical composition of the hydrogen donor.

13. The method of claim 8 wherein directing the combustion products includes directing steam and radiant energy into the reaction zone, and wherein the method further comprises directing an additional portion of steam into the reaction zone.

14. The method of claim 8 wherein directing the constituent includes directing the hydrogen-based fuel to the engine for combustion, and wherein the method further comprises:

directing water withdrawn from the reaction zone to the engine for cooling; and

automatically controlling rates at which the hydrogen-based fuel and the water enter the engine to vary differently.

15. The method of claim 8, further comprising providing heat to the reaction zone from a renewable energy source.

16. The method of claim 15 wherein providing heat includes providing heat obtained from regenerative braking.

17. The method of claim 8 wherein providing heat includes providing heat obtained from solar energy.

18. The method of claim 8, further comprising at least restricting heat transfer away from the engine by thermal pathways other than the combustion products, via insulation provided at the engine.

19. A method for operating an engine and a chemical reactor, comprising:

directing methane into a reaction zone of a reactor vessel;

combusting a hydrocarbon fuel in an internal combustion engine to produce power and combustion products, the combustion products including water and radiant energy;

directing the combustion products through a transfer passage coupled between the engine and the reaction zone to transfer to the reaction zone (a) a first portion of the water in the form of steam, and (b) radiant energy;

dissociating the methane to produce hydrogen and carbon monoxide in the reaction zone;

removing the hydrogen, carbon monoxide and water from the reaction zone;

separating at least a portion of the water from the hydrogen and carbon monoxide;

directing a portion of the hydrogen and carbon monoxide to the internal combustion engine for combustion; and

directing at least some of the water separated from the hydrogen and carbon monoxide to the internal combustion engine to cool the internal combustion engine.

20. The method of claim 19, further comprising:

withdrawing a portion of the combustion products upstream of the reaction zone;

providing the portion of combustion products and a portion of hydrogen to a turbocharger; and

producing additional power at the turbocharger.

21. The method of claim 19, further comprising forming graphene from carbon monoxide removed from the reaction zone.

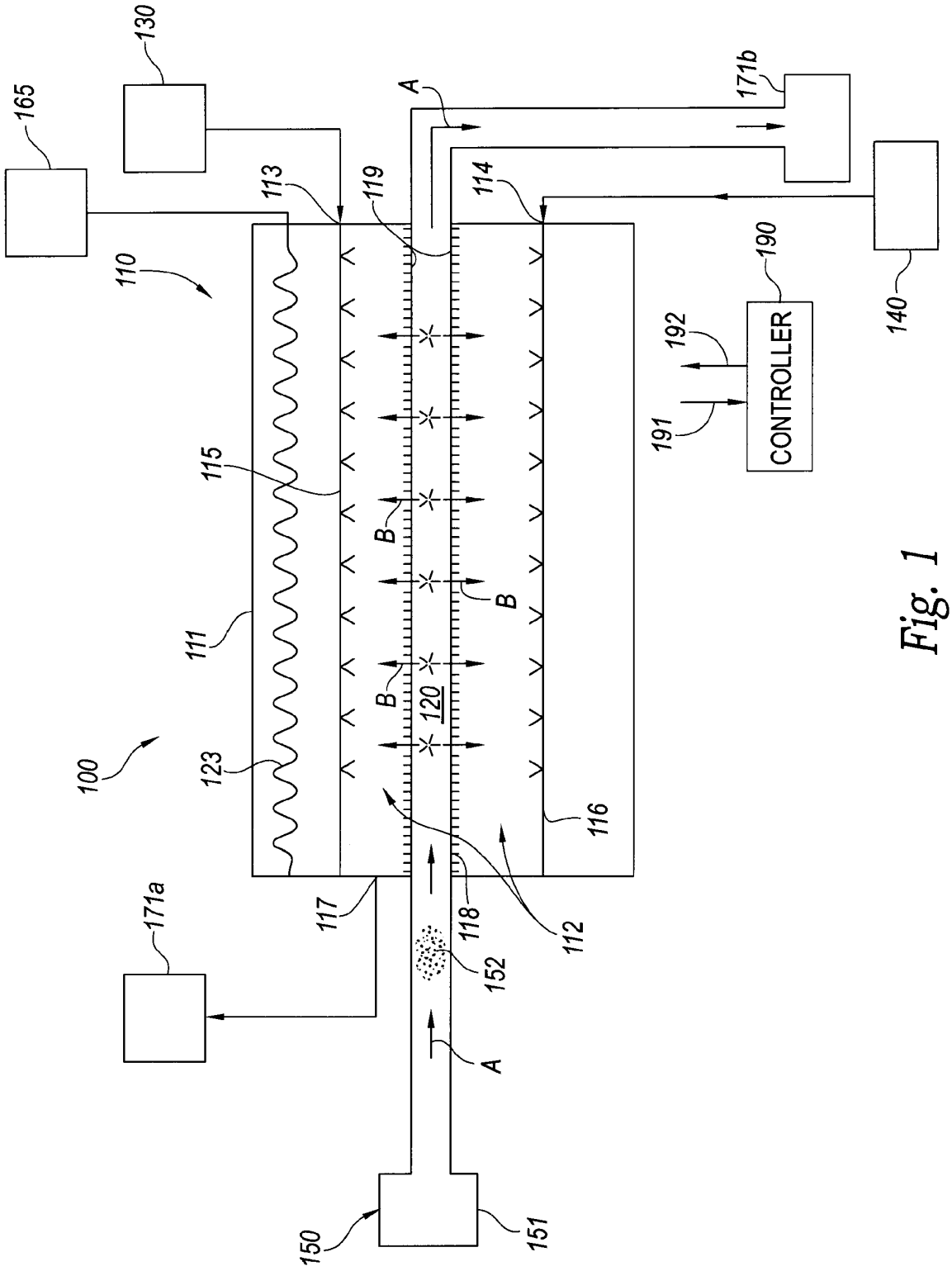
100
110
111
112
113
114
115
116
117
118
119
120
123
130
140
150
151
152
165
171a
171b
190
191
192
CONTROLLER
A
B

Fig. 1

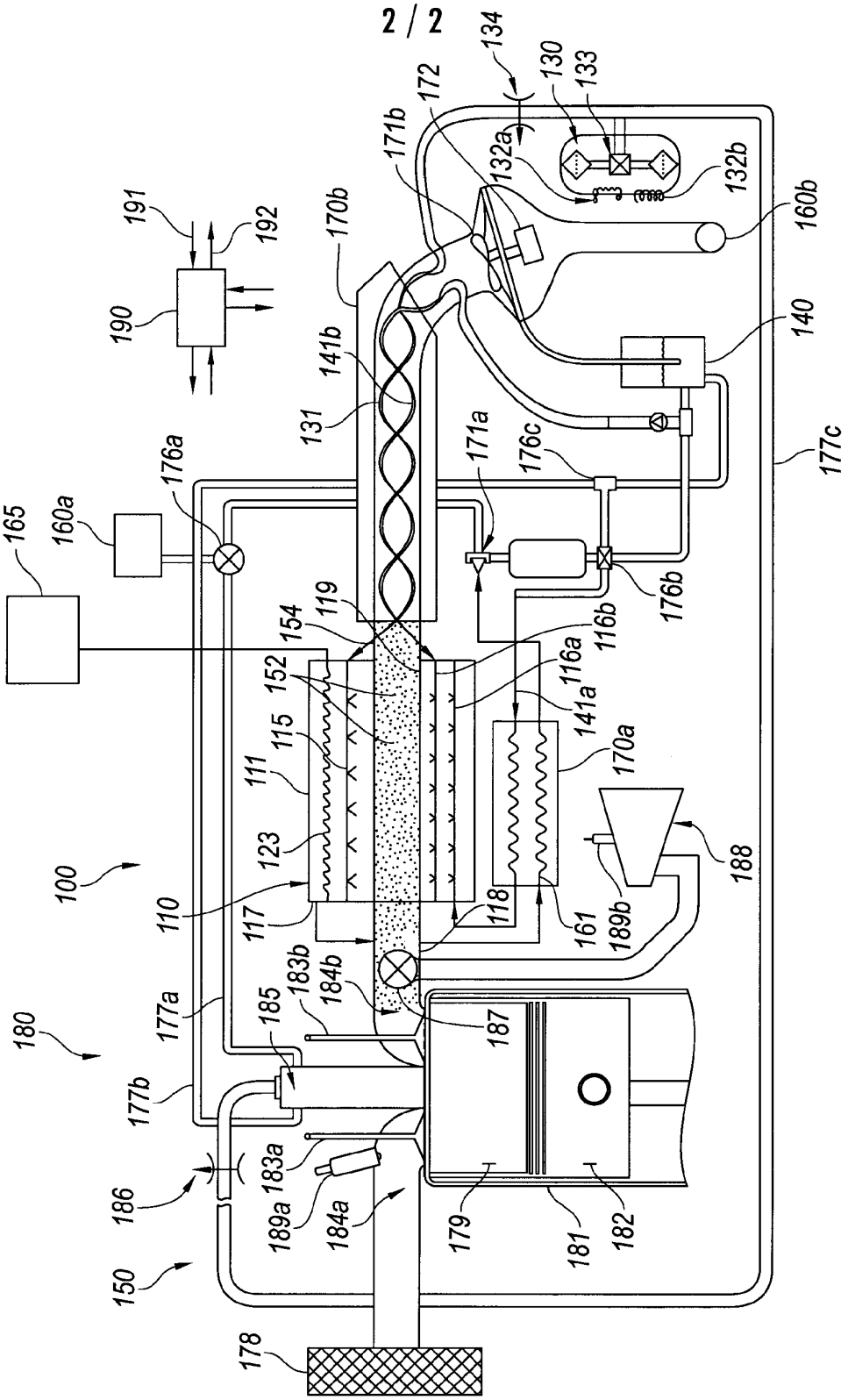
134
130
133
172
171b
132a
132b
160b
191
192
170b
190
140
141b
131
171a
176c
177c
176a
165
160a
176b
154
119
116b
152
116a
141a
115
111
170a
123
188
100
110
117
118
161
189b
183b
184b
177a
185
187
180
177b
183a
186
189a
184a
179
181
182
150
178

Fig. 2

UNITED STATES PATENT AND TRADEMARK OFFICE

Commissioner for Patents
United States Patent and Trademark Office
P.O. Box 1450
Alexandria, VA 22313-1450
www.uspto.gov
uninquivical

PERKINS COIE LLP
PATENT-SEA
P.O. BOX 1247
SEATTLE, WA 98111-1247

MAILED
MAR 30 2012
OFFICE OF PETITIONS

In re Application of	:
Roy Edward McAlister	: DECISION ON REQUEST TO
Application No.: 13/027,198	: PARTICIPATE IN THE PATENT
Filed: February 14, 2011	: PROSECUTION HIGHWAY
Attorney Docket No.: 695458611US	: PROGRAM AND PETITION
For: COUPLED THERMOCHEMICAL	: TO MAKE SPECIAL UNDER
REACTORS AND ENGINES, AND	: 37 CFR 1.102(a)
ASSOCIATED SYSTEMS AND	:
METHODS	:

This is a decision in response to the request to participate in the PCT Patent Prosecution Highway (PCT-PPH) pilot program and the petition under 37 CFR 1.102(a), filed on 30 January 2012, to make the above-identified application special.

A review of the record discloses that "special status" under the pilot program for applications pertaining to Green Technologies was granted in a decision mailed August 19, 2011.

Since no further benefit can be gain by acceptance of a petition and request to participate in the PPH program, the request and petition are **DISMISSED AS MOOT**.

Inquiries concerning this decision should be directed to the undersigned at 571-272-3204.

All other inquiries concerning the examination or status of the application is accessible in the PAIR system at http://www.uspto.gov/ebc.index.html.

This application is being returned to Technology Center AU 1723 for appropriate action by the examiner.

/SDB/

Sherry D. Brinkley
Petitions Examiner
Office of Petitions

Doc Code: PET.GREEN
Document Description: Petition for Green Tech Pilot

PTO/SB/420 (11-10)
Approved for use through 01/31/2011. OMB 0651-0062
U.S. Patent and Trademark Office; U.S. DEPARTMENT OF COMMERCE
Under the Paperwork Reduction Act of 1995, no persons are required to respond to a collection of information unless it displays a valid OMB control number.

PETITION TO MAKE SPECIAL UNDER THE GREEN TECHNOLOGY PILOT PROGRAM

Attorney Docket Number:	695458601US	Application Number (if known): 13/027,208- Conf. #6383	Filing date: February 14, 2011
First Named Inventor:	Roy E. McAlister, P.E.		
Title:	CHEMICAL PROCESSES AND REACTORS FOR EFFICIENTLY PRODUCING HYDROGEN FUELS AND STRUCTURAL MATERIALS, AND ASSOCIATED SYSTEMS AND METHODS		

APPLICANT HEREBY REQUESTS TO PARTICIPATE IN THE GREEN TECHNOLOGY PILOT PROGRAM FOR THE ABOVE-IDENTIFIED APPLICATION. See Instruction Sheet on page 2.

This petition must be timely filed electronically using the USPTO electronic filing system, EFS-Web.

1. By filing this petition:

   Applicant is requesting early publication: Applicant hereby requests early publication under 37 CFR 1.219 and the publication fee set forth in 37 CFR 1.18(d) accompanies this request.

2. By filing this petition: applicant is agreeing to make an election without traverse in a telephonic interview and elect an invention that meets the eligibility requirements for the Green Technology Pilot Program, if the Office determines that the claims are not obviously directed to a single invention. See Instruction Sheet.

3. This request is accompanied by statements of special status for the eligibility requirement.

4. The application contains no more than three (3) independent claims and twenty (20) total claims.

5. The application does not contain any multiple dependent claims.

6. Other attachments: Statement in Support of Petition

Signature		Date	5.31.11
Name (Print/Typed)	Susan D. Betcher	Registration Number	43,498

Note: Signatures of all the inventors or assignees of record of the entire interest or their representative(s) are required in accordance with 37 CFR 1.33 and 11.18. Please see 37 CFR 1.4(d) for the form of the signature. If necessary, submit multiple forms if more than one signature, see below.*

☐ *Total of 1 forms are submitted.

Docket No.: 695458601US
(PATENT)

IN THE UNITED STATES PATENT AND TRADEMARK OFFICE

In re Patent Application of:
Roy E. McAlister, P.E.

Application No.: 13/027,208

Confirmation No.: 6383

Filed: February 14, 2011

Art Unit: 1723

For: CHEMICAL PROCESSES AND REACTORS FOR EFFICIENTLY PRODUCING HYDROGEN FUELS AND STRUCTURAL MATERIALS, AND ASSOCIATED SYSTEMS AND METHODS

Examiner: Not Yet Assigned

STATEMENT IN SUPPORT OF PETITION TO MAKE SPECIAL

MS Missing Parts
Commissioner for Patents
P.O. Box 1450
Alexandria, VA 22313-1450

Sir:

This paper is filed in support of the Petition to Make Special under the Green Technology Pilot Program filed concurrently herewith.

Petitioner hereby states that the referenced application is directed to a single invention that materially enhances the quality of the environment, or that materially contributes to: (1) the discovery or development of renewable energy resources; (2) the more efficient utilization and conservation of energy resources; or (3) green house gas emission reduction.

More specifically, the specification and claims are directed to a method of processing a hydrogen donor for more efficiently producing hydrogen fuels and structural materials for the more efficient utilization and conservation of energy resources.

In light of the above, it is requested that the Petition to Make Special under the Green Technology Pilot Program be granted.

Applicant believes no fee is due with this response. However, if a fee is due, please charge our Deposit Account No. 50-0665, under Order No. 695458601US from which the undersigned is authorized to draw.

Dated: 5.31.11

Respectfully submitted,

By_____

Susan D. Betcher
Registration No.: 43,498
PERKINS COIE LLP
P.O. Box 1247
Seattle, Washington 98111-1247
(206) 359-8000
(206) 359-7198 (Fax)
Attorney for Applicant

UNITED STATES PATENT AND TRADEMARK OFFICE

UNITED STATES DEPARTMENT OF COMMERCE
United States Patent and Trademark Office
Address: COMMISSIONER FOR PATENTS
P.O. Box 1450
Alexandria, Virginia 22313-1450
www.uspto.gov

APPLICATION NO.	FILING DATE	FIRST NAMED INVENTOR	ATTORNEY DOCKET NO.	CONFIRMATION NO.
13/027,208	02/14/2011	Roy Edward McAlister	695458601US	6383

25096 7590 07/07/2011
PERKINS COIE LLP
PATENT-SEA
P.O. BOX 1247
SEATTLE, WA 98111-1247

EXAMINER

ART UNIT	PAPER NUMBER
3747	

NOTIFICATION DATE	DELIVERY MODE
07/07/2011	ELECTRONIC

Please find below and/or attached an Office communication concerning this application or proceeding.

The time period for reply, if any, is set in the attached communication.

Notice of the Office communication was sent electronically on above-indicated "Notification Date" to the following e-mail address(es):

patentprocurement@perkinscoie.com

UNITED STATES PATENT AND TRADEMARK OFFICE

Commissioner for Patents
United States Patent and Trademark Office
P.O. Box 1450
Alexandria, VA 22313-1450
www.uspto.gov

PERKINS COIE LLP
PATENT-SEA
P.O. BOX 1247
SEATTLE WA 98111-1247

In re Application of	:	
MCALISTER, ROY EDWARD	:	DECISION ON PETITION
Application No. 13/027208	:	TO MAKE SPECIAL UNDER
Filed: February 14, 2011	:	THE GREEN TECHNOLOGY
Attorney Docket No. 695458601US	:	PILOT PROGRAM

This is a decision on the petition under 37 CFR 1.102, filed May 31, 2011, to make the above-identified application special under the pilot program for applications pertaining to Green Technologies as set forth in 74 Federal Register Notice 64666 (December 8, 2009) and amended by 75 Federal Register Notice 28554 (May 21, 2010) and 75 Federal Register Notice 69049 (November 10, 2010).

The petition is **dismissed**.

A grantable petition to make an application special under 37 CFR 1.102 and the pilot program as set forth in 74 FR 64666 must be directed to a nonprovisional application filed under 35 USC 111(a) or be a national stage entry under 35 USC 371, exclusive of any reissue applications.

If reconsideration of this decision is desired, a petition for reconsideration must be filed within ONE (1) MONTH OR THIRTY (30) DAYS from the mail date of this decision, whichever is longer. No extension of this time limit can be granted under 37 CFR 1.136(a) or (b). The petition for reconsideration should include an exhaustive attempt to provide the lacking item(s) noted below, since, after a decision on the petition for reconsideration, no further reconsideration or review of the matter will be undertaken by the Director.

In order to qualify for special status, the following requirements must be met. 1) The application must have no more than 3 independent claims and no more than 20 total claims. 2) The application must not contain any multiple dependent claims. 3) The petition must state the basis for seeking special status, i.e., the claimed invention either: A) materially enhances the quality of the environment or B) materially contributes to: i) the discovery or development of renewable energy resources, ii) the more efficient utilization and conservation of energy resources, or iii) greenhouse gas emission reduction. 4) If the disclosure is not clear on its face that the claimed invention materially contributes under category (A) or (B), the petition must be accompanied by

a statement by the applicant, assignee, or an attorney/agent registered to practice before the Office explaining how the materiality standard is met. 5) A statement that applicant will agree to make an election without traverse in a telephonic interview if a restriction requirement is made by the examiner. 6) The petition to make special must be filed electronically. 7) The petition must be filed at least one day prior to the date that a first Office Action appears in the Patent Application Information Retrieval (PAIR) system. 8) The petition must be accompanied by a request for early publication in compliance with 37 CFR 1.219 and include the publication fee as set forth in 37 CFR 1.18(d).

The petition lacks item #4. In regard to item 4, petitioner should note that the instant petition includes a statement identifying the basis for the special status (i.e., whether the instant invention (1) materially enhances the quality of the environment or materially contributes to (2) the discovery or development of renewable energy sources or (3) more efficient utilization or conservation of energy resources or (4) greenhouse gas reduction) as required by sections II and III of the notice. Petitioner indicates that the basis for special status is that the claimed invention is on (2), (3), and (4) above. However, as stated in the notice, petitioner must also provide a statement pertaining to the materiality standard if the application disclosure is not clear on its face as to the materiality of the basis for the special status of the invention. The petitioner does not explain how the chemical processes and reactors for efficiently producing hydrogen fuels satisfy any of the bases for special status. Thus, this petition lacks such a statement and it is not agreed that the application on its face meets that materiality standard.

Any reconsideration of this decision should be submitted through the USPTO electronic filing system, EFS-Web, and selecting the document description of "Petition for Green Tech Pilot" on the EFS-Web screen.

Telephone inquiries concerning this decision should be directed to Henry C. Yuen at 571-272-4856.

This application is currently undergoing pre-examination processing. Upon completion, the application will be forwarded to the Technology Center Art Unit 3747 for action in its regular turn.

/Henry C. Yuen/

Henry C. Yuen
Quality Assurance Specialist
Technology Center TC 3700

Docket No.: 695458601US
(PATENT)

IN THE UNITED STATES PATENT AND TRADEMARK OFFICE

In re Patent Application of:
Roy E. McAlister, P.E.

Application No.: 13/027,208

Confirmation No.: 6383

Filed: February 14, 2011

Art Unit: 3747

For: CHEMICAL PROCESSES AND REACTORS FOR EFFICIENTLY PRODUCING HYDROGEN FUELS AND STRUCTURAL MATERIALS, AND ASSOCIATED SYSTEMS AND METHODS

Examiner: Not Yet Assigned

RENEWED PETITION TO MAKE SPECIAL UNDER THE GREEN TECHNOLOGY PILOT PROGRAM

Commissioner for Patents
P.O. Box 1450
Alexandria, VA 22313-1450

Sir:

This is a renewed petition under 37 CFR 1.102 to make the present application special under the pilot program for applications pertaining to Green Technologies as set forth in 74 Federal Register Notice 64666 (December 8, 2009). This petition was previously filed on May 31, 2011 but was dismissed in the Decision on Petition to Make Special under the Green Technology Pilot Program mailed July 7, 2011.

In the Decision, the Office of Petitions alleged that the following requirements were not met in the Petition as filed on May 31, 2011:

4. If the disclosure is not clear on its face that the claims invention materially contributes under category (A) or (B), the petition must be accompanied

by the applicant, assignee, or an attorney/agent registered to practice before the Office explaining how the materiality standard is met.

Regarding requirement 4, petitioner hereby states that the instant invention (1) materially enhances the quality of the environment or materially contributes to (2) development of renewable energy resources or energy conservation, or (2) greenhouse gas reduction.

More specifically, the specification and claims are directed to chemical processes and reactors for efficiently producing hydrogen fuels and structural materials using sustainable renewable energy sources. Accordingly, these methods materially contribute to the development of renewable energy resources including hydrogen fuels and structural building materials.

For example, as claimed, the method employs a sustainable, renewable energy source to provide:

(a) a structural building block based on at least one of carbon, nitrogen, boron, silicon, sulfur and a transition metal; and

(b) a hydrogen-based fuel.

Petitioner respectfully requests reconsideration and allowance of the present petition. Petitioner believes no fee is due with this response. However, if a fee is due, please charge our Deposit Account No. 50-0665, under Order No. 695458601US from which the undersigned is authorized to draw.

Dated: August 8, 2011

Respectfully submitted,

By_____

Susan D. Betcher
Registration No.: 43,498
PERKINS COIE LLP
P.O. Box 1247
Seattle, Washington 98111-1247
(206) 359-8000
(206) 359-7198 (Fax)
Attorney for Applicant

UNITED STATES PATENT AND TRADEMARK OFFICE

UNITED STATES DEPARTMENT OF COMMERCE
United States Patent and Trademark Office
Address: COMMISSIONER FOR PATENTS
P.O. Box 1450
Alexandria, Virginia 22313-1450
www.uspto.gov

APPLICATION NO.	FILING DATE	FIRST NAMED INVENTOR	ATTORNEY DOCKET NO.	CONFIRMATION NO.
13/027,208	02/14/2011	Roy Edward McAlister	695458601US	6383

25096 7590 08/19/2011
PERKINS COIE LLP
PATENT-SEA
P.O. BOX 1247
SEATTLE, WA 98111-1247

EXAMINER

ART UNIT	PAPER NUMBER
3747	

NOTIFICATION DATE	DELIVERY MODE
08/19/2011	ELECTRONIC

Please find below and/or attached an Office communication concerning this application or proceeding.

The time period for reply, if any, is set in the attached communication.

Notice of the Office communication was sent electronically on above-indicated "Notification Date" to the following e-mail address(es):

patentprocurement@perkinscoie.com

UNITED STATES PATENT AND TRADEMARK OFFICE

Commissioner for Patents
United States Patent and Trademark Office
P.O. Box 1450
Alexandria, VA 22313-1450
www.uspto.gov

PERKINS COIE LLP
PATENT-SEA
P.O. BOX 1247
SEATTLE WA 98111-1247

AUG 19 2011

In re Application of	:	
Roy E. McAlister	:	DECISION ON PETITION
Application No. 13/027,208	:	TO MAKE SPECIAL UNDER
Filed: February 14, 2011	:	THE GREEN TECHNOLOGY
Attorney Docket No. 6954586011US	:	PILOT PROGRAM

This is a decision on the petition under 37 CFR 1.102, filed August 08, 2011, to make the above-identified application special under the pilot program for applications pertaining to Green Technologies as set forth in 74 Federal Register Notice 64666 (December 8, 2009) and amended by 75 Federal Register Notice 28554 (May 21, 2010) and 75 Federal Register Notice 69049 (November 10, 2010).

The petition is **GRANTED**.

A grantable petition to make an application special under 37 CFR 1.102 and the pilot program as set forth in 74 FR 64666 must be directed to a nonprovisional application filed under 35 USC 111(a) or be a national stage entry under 35 USC 371, exclusive of any reissue applications.

In order to qualify for special status, the following requirements must be met. 1) The application must have no more than 3 independent claims and no more than 20 total claims. 2) The application must not contain any multiple dependent claims. 3) The petition must state the basis for seeking special status, i.e., the claimed invention either: A) materially enhances the quality of the environment or B) materially contributes to: i) the discovery or development of renewable energy resources, ii) the more efficient utilization and conservation of energy resources, or iii) greenhouse gas emission reduction. 4) If the disclosure is not clear on its face that the claimed invention materially contributes under category (A) or (B), the petition must be accompanied by a statement by the applicant, assignee, or an attorney/agent registered to practice before the Office explaining how the materiality standard is met. 5) A statement that applicant will agree to make an election without traverse in a telephonic interview if a restriction requirement is made by the examiner. 6) The petition to make special must be filed electronically. 7) The petition must be filed at least one day prior to the date that a first Office Action appears in the Patent Application Information Retrieval (PAIR) system. 8) The petition must be accompanied by a request for early publication in compliance with 37 CFR 1.219 and include the publication fee as set forth in 37 CFR 1.18(d).

The requirement for a fee for consideration of the petition to make special for applications pertaining to Green Technologies has been waived.

The instant petition complies with items 1 – 8 above. Accordingly, the above-identified application has been accorded "special" status.

Telephone inquires concerning this decision should be directed to Blaine Copenheaver at 571-272-1156.

The application is being forwarded to the examiner for action on the merits commensurate with this decision.

/Blaine Copenheaver/

Blaine Copenheaver
Quality Assurance Specialist
Technology Center 1700

PTO/SB/20PCT-KR (06-10)
Approved for use through 01/31/2012. OMB 0651-0058
U.S. Patent and Trademark Office; U.S. DEPARTMENT OF COMMERCE

Under the Paperwork Reduction Act of 1995, no persons are required to respond to a collection of information unless it displays a valid OMB control number.

REQUEST FOR PARTICIPATION IN THE PATENT COOPERATION TREATY – PATENT PROSECUTION HIGHWAY (PCT-PPH) PILOT PROGRAM BETWEEN THE KOREAN INTELLECTUAL PROPERTY OFFICE (KIPO) AND THE USPTO

Application No.:	13/027,208-Conf. #6383	Filing Date:	February 14, 2011
First Named Inventor:	Roy E. McAlister, P.E.		
Title of the Invention:	CHEMICAL PROCESSES AND REACTORS FOR EFFICIENTLY PRODUCING HYDROGEN FUELS AND STRUCTURAL MATERIALS, AND ASSOCIATED SYSTEMS AND METHODS		

THIS REQUEST FOR PARTICIPATION IN THE PCT-PPH PILOT PROGRAM ALONG WITH THE REQUIRED DOCUMENTS MUST BE SUBMITTED VIA EFS-WEB. INFORMATION REGARDING EFS-WEB IS AVAILABLE AT HTTP://WWW.USPTO.GOV/EBC/EFS_HELP.HTML.

APPLICANT HEREBY REQUESTS PARTICIPATION IN THE PCT-PPH PROGRAM AND PETITIONS TO MAKE THE ABOVE-IDENTIFIED APPLICATION SPECIAL UNDER THE PCT-PPH PROGRAM.

The above-identified application is (1) a national stage entry of the corresponding PCT application, or (2) a national stage entry of another PCT application which claims priority to the corresponding PCT application, or (3) a national application that claims domestic/ foreign priority to the corresponding PCT application, or (4) a national application which forms the basis for the priority claim in the corresponding PCT application, or (5) a continuing application of a U.S. application that satisfies one of (1) to (4) above, or (6) a U.S. application that claims domestic benefit to a U.S. provisional application which forms the basis for the priority claim in the corresponding PCT application.

The corresponding PCT application number(s) is/are: PCT/US11/24804

The international date of the corresponding PCT application(s) is/are: February 14, 2011

I. **List of Required Documents:**

a. **A copy of the latest international work product (WO/ISA, WO/IPEA, or IPER) in the above-identified corresponding PCT application(s).**

[x] Is attached.

[ ] Is not attached because the document is already in the U.S. application.

b. **A copy of all claims which were indicated as having novelty, inventive step and industrial applicability in the above-identified corresponding PCT appliction(s).**

[x] Is attached.

[ ] Is not attached because the document is already in the U.S. application.

c. **English translations of the documents in a. and b. above are attached (if the documents are not in the English language). A statement that the English translation is accurate is attached for the document in b. above.**

Under the Paperwork Reduction Act of 1995, no persons are required to respond to a collection of information unless it displays a valid OMB control number.

REQUEST FOR PARTICIPATION IN THE PCT-PPH PILOT PROGRAM BETWEEN THE KIPO AND THE USPTO
(continued)

Application No.:	13/027,208-Conf. #6383
First Named Inventor:	Roy E. McAlister, P.E.

d. **(1) An information disclosure statement listing the documents cited in the international work products (ISR, WO/ISA, WO/IPEA, IPER) of the corresponding PCT application.**

[x] Is attached.

[x] Has already been filed in the above-identified U.S. application on July 18, 2011

(2) Copies of all documents (except) for U.S. patents or U.S. patent application publications)

[x] Are attached.

[x] Have already been filed in the above-identified U.S. application on July 18, 2011

II. Claims Correspondence Table:

Claims in US Application	Patentable Claims in the corresponding PCT Application	Explanation regarding the correspondence
1-4, 6-21	1-4, 6-21	The claims pending in the US application are identical to their corresponding claims in the PCT Application.

III. All the claims in the US application sufficiently correspond to the patentable claims in the corresponding PCT application.

Signature		Date	Jan. 30, 2012
Name (Print/Typed)	John M. Wechkin	Registration Number	42,216

PCT/US2011/024804

PATENT COOPERATION TREATY

69545-8601.WO00
SDB/NK

From the INTERNATIONAL SEARCHING AUTHORITY

To:

WECHKIN JOHN M.

PERKINS COIE LLP P.O. BOX 1247 SEATTLE WA 98111-1247 USA

DOCKETED CP1
☒ Deadline
☐ Follow up
☐ Previously
☐ Abandoned
☐ Transferred
☐ Docketed

RECEIVED
PATENT DOCKETING
OCT 28 2011
PERKINS COIE LLP

12-24-11
1-24-12
SDB

PCT

NOTIFICATION OF TRANSMITTAL OF THE INTERNATIONAL SEARCH REPORT AND THE WRITTEN OPINION OF THE INTERNATIONAL SEARCHING AUTHORITY, OR THE DECLARATION

(PCT Rule 44.1)

	Date of mailing (day/month/year) 24 OCTOBER 2011 (24.10.2011)
Applicant's or agent's file reference 695458601WO	FOR FURTHER ACTION See paragraphs 1 and 4 below
International application No **PCT/US2011/024804**	International filing date (day/month/year) **14 FEBRUARY 2011 (14.02.2011)**
Applicant **MCALISTER, ROY EDWARD**	

1. ☒ The applicant is hereby notified that the international search report and the written opinion of the International Searching Authority have been established and are transmitted herewith.

Filing of amendments and statement under Article 19:

The applicant is entitled, if he so wishes, to amend the claims of the international application (see Rule 46):

When? The time limit for filing such amendments is normally two months from the date of transmittal of the international search report.

Where? Directly to the International Bureau of WIPO, 34 chemin des Colombettes 1211 Geneva 20, Switzerland, Facsimile No.: +41 22 338 82 70

For more detailed instructions, see *PCT Applicant's Guide*, International Phase, paragraphs 9.004 - 9.011.

2. ☐ The applicant is hereby notified that no international search report will be established and that the declaration under Article 17(2)(a) to that effect and the written opinion of the International Searching Authority are transmitted herewith.

3. ☐ **With regard to any protest** against payment of (an) additional fee(s) under Rule 40.2, the applicant is notified that:

☐ the protest together with the decision thereon has been transmitted to the International Bureau together with any request to forward the texts of both the protest and the decision thereon to the designated Offices.

☐ no decision has been made yet on the protest; the applicant will be notified as soon as a decision is made.

4. **Reminders**

The applicant may submit comments on an informal basis on the written opinion of the International Searching Authority to the International Bureau. The International Bureau will send a copy of such comments to all designated Offices unless an international preliminary examination report has been or is to be established. Following the expiration of 30 months from the priority date, these comments will also be made available to the public.

Shortly after the expiration of **18 months** from the priority date, the international application will be published by the International Bureau. If the applicant wishes to avoid or postpone publication, a notice of withdrawal of the international application, or of the priority claim, must reach the International Bureau before the completion of the technical preparations for international publication (Rules 90bis.1 and 90bis.3).

Within **19 months** from the priority date, but only in respect of some designated Offices, a demand for international preliminary examination must be filed if the applicant wishes to postpone the entry into the national phase **until 30 months** from the priority date (in some Offices even later); otherwise, the applicant must, **within 20 months** from the priority date, perform the prescribed acts for entry into the national phase before those designated Offices.

In respect of other designated Offices, the time limit of **30 months** (or later) will apply even if no demand is filed within 19months.

For details about the applicable time limits, Office by Office, see www.wipo.int/pct/en/texts/time_limits.html and the PCT Applicant's Guide, National Chapters.

Name and mailing address of the ISA/KR Korean Intellectual Property Office Government Complex-Daejeon, 189 Cheongsa-ro, Seo-gu, Daejeon 302-701, Republic of Korea Facsimile No. 82-42-472-7140	Authorized officer COMMISSIONER Telephone No. 82-42-481-8734

* Attention

Copies of the documents cited in the international search report can be searched in the following Korean Intellectual Property Office English website for three months from the date of mailing of the international search report.

http://www.kipo.go.kr/en/ => PCT Services => PCT Services

ID : PCT international application number
PW : **E6BG7WPT**

Inquiries related to PCT International Search Report or Written Opinion prepared by KIPO as an International Searching Authority can be answered not only by KIPO but also through IPKC (Intellectual Property Korea Center), located in Vienna, VA, which functions as a PCT Help Desk for PCT applicants.

Homepage: http://www.ipkcenter.com
Email: ipkc@ipkcenter.com
Phone: +1 703 388 1066
Fax: +1 703 388 1084

PATENT COOPERATION TREATY

PCT

INTERNATIONAL SEARCH REPORT

(PCT Article 18 and Rules 43 and 44)

Applicant's or agent's file reference 695458601WO	FOR FURTHER ACTION	see Form PCT/ISA/220 as well as, where applicable, item 5 below.
International application No. **PCT/US2011/024804**	International filing date *(day/month/year)* **14 FEBRUARY 2011 (14.02.2011)**	(Earliest) Priority Date *(day/month/year)* 13 FEBRUARY 2010 (13.02.2010)
Applicant **MCALISTER, ROY EDWARD**		

This International search report has been prepared by this International Searching Authority and is transmitted to the applicant according to Article 18. A copy is being transmitted to the International Bureau.

This international search report consists of a total of 3 sheets.

☐ It is also accompanied by a copy of each prior art document cited in this report.

1. **Basis of the report**
   a. With regard to the **language**, the international search was carried out on the basis of:
      ☒ the international application in the language in which it was filed
      ☐ a translation of the international application into _____, which is the language of a translation furnished for the purposes of international search (Rules 12.3(a) and 23.1(b))
   b. ☐ This international search report has been established taking into account the **rectification of an obvious mistake** authorized by or notified to this Authority under Rule 91 (Rule 43.6*bis*(a)).
   c. ☐ With regard to any **nucleotide and/or amino acid sequence** disclosed in the international application, see Box No. I.
2. ☐ **Certain claims were found unsearchable** (See Box No. II)
3. ☐ **Unity of invention is lacking** (See Box No. III)
4. With regard to the **title**,
   ☒ the text is approved as submitted by the applicant.
   ☐ the text has been established by this Authority to read as follows:
5. With regard to the **abstract**,
   ☒ the text is approved as submitted by the applicant.
   ☐ the text has been established, according to Rule 38.2, by this Authority as it appears in Box No. IV. The applicant may, within one month from the date of mailing of this international search report, submit comments to this Authority.
6. With regard to the **drawings**,
   a. the figure of the **drawings** to be published with the abstract is Figure No. 1
      ☒ as suggested by the applicant.
      ☐ as selected by this Authority, because the applicant failed to suggest a figure.
      ☐ as selected by this Authority, because this figure better characterizes the invention.
   b. ☐ none of the figure is to be published with the abstract.

INTERNATIONAL SEARCH REPORT

International application No.
PCT/US2011/024804

A. CLASSIFICATION OF SUBJECT MATTER

C01B 3/36(2006.01)i, B01J 19/08(2006.01)i, B01J 19/24(2006.01)i, C01B 31/02(2006.01)i

According to International Patent Classification (IPC) or to both national classification and IPC

B. FIELDS SEARCHED

Minimum documentation searched (classification system followed by classification symbols)

C01B 3/36; F02B 43/08; F02M 25/06; F23G 7/08; F23D 1/00; C01B 13/00

Documentation searched other than minimum documentation to the extent that such documents are included in the fields searched

Korean utility models and applications for utility models

Japanese utility models and applications for utility models

Electronic data base consulted during the international search (name of data base and, where practicable, search terms used)

eKOMPASS(KIPO internal) & Keywords: hydrogen donor, hydrovarbon, building block, hydrogen-based fuel, dissociation product

C. DOCUMENTS CONSIDERED TO BE RELEVANT

Category*	Citation of document, with indication, where appropriate, of the relevant passages	Relevant to claim No.
A	US 04053576 A (EDWARD A. FLETCHER) 11 October 1977 See abstract, claim 1	1-21
A	US 04519342 A (HEEYOUNG YOON) 28 May 1985 See abstract, claim 1	1-21
A	US 2003-0190569 A1 (CHARLES ANTHONY DAFFT et al.) 09 October 2003 See abstract, claims 3, 5	1-21
A	US 06155212 A (ROY E. MCALISTER) 05 December 2000 See abstract, claim 2	1-21

☐ Further documents are listed in the continuation of Box C. ☒ See patent family annex.

* Special categories of cited documents:

"A" document defining the general state of the art which is not considered to be of particular relevance

"E" earlier application or patent but published on or after the international filing date

"L" document which may throw doubts on priority claim(s) or which is cited to establish the publication date of citation or other special reason (as specified)

"O" document referring to an oral disclosure, use, exhibition or other means

"P" document published prior to the international filing date but later than the priority date claimed

"T" later document published after the international filing date or priority date and not in conflict with the application but cited to understand the principle or theory underlying the invention

"X" document of particular relevance; the claimed invention cannot be considered novel or cannot be considered to involve an inventive step when the document is taken alone

"Y" document of particular relevance; the claimed invention cannot be considered to involve an inventive step when the document is combined with one or more other such documents,such combination being obvious to a person skilled in the art

"&" document member of the same patent family

Date of the actual completion of the international search	Date of mailing of the international search report
24 OCTOBER 2011 (24.10.2011)	**24 OCTOBER 2011 (24.10.2011)**
Name and mailing address of the ISA/KR Korean Intellectual Property Office Government Complex-Daejeon, 189 Cheongsa-ro, Seo-gu, Daejeon 302-701, Republic of Korea Facsimile No. 82-42-472-7140	Authorized officer LEE, Young Wan Telephone No. 82-42-481-5560

Form PCT/ISA/210 (second sheet) (July 2009)

INTERNATIONAL SEARCH REPORT

Information on patent family members

International application No.
PCT/US2011/024804

Patent document cited in search report	Publication date	Patent family member(s)	Publication date
US 04053576 A	11.10.1977	None	
US 04519342 A	28.05.1985	EP 0102845 A2	14.03.1984
		EP 0102845 A3	03.04.1985
		EP 0243538 A1	04.11.1987
		JP 59-141758 A	14.08.1984
		US 04444158 A	24.04.1984
		US 04476818 A	16.10.1984
US 2003-0190569 A1	09.10.2003	US 6908297 B2	21.06.2005
US 06155212 A	05.12.2000	US 05343699 A	06.09.1994
		US 05394852 A	07.03.1995
		US 2003-0012985 A1	16.01.2003
		US 2011-0125391 A1	26.05.2011
		US 6446597 B1	10.09.2002
		US 6756140 B1	29.06.2004

PATENT COOPERATION TREATY

From the
INTERNATIONAL SEARCHING AUTHORITY

To:
WECHKIN JOHN M.

PERKINS COIE LLP P.O. BOX 1247 SEATTLE WA 98111-1247 USA

PCT

WRITTEN OPINION OF THE INTERNATIONAL SEARCHING AUTHORITY

(PCT Rule 43bis.1)

Date of mailing *(day/month/year)*	**24 OCTOBER 2011 (24.10.2011)**
Applicant's or agent's file reference 695458601WO	**FOR FURTHER ACTION** See paragraph 2 below

International application No.	International filing date *(day/month/year)*	Priority date *(day/month/year)*
PCT/US2011/024804	**14 FEBRUARY 2011 (14.02.2011)**	13 FEBRUARY 2010 (13.02.2010)

International Patent Classification (IPC) or both national classification and IPC

C01B 3/36(2006.01)i, B01J 19/08(2006.01)i, B01J 19/24(2006.01)i, C01B 31/02(2006.01)i

Applicant

MCALISTER, ROY EDWARD

1. This opinion contains indications relating to the following items:

- [x] Box No. I Basis of the opinion
- [ ] Box No. II Priority
- [ ] Box No. III Non-establishment of opinion with regard to novelty, inventive step and industrial applicability
- [ ] Box No. IV Lack of unity of invention
- [x] Box No. V Reasoned statement under Rule 43bis.1(a)(i) with regard to novelty, inventive step or industrial applicability; citations and explanations supporting such statement
- [ ] Box No. VI Certain documents cited
- [ ] Box No. VII Certain defects in the international application
- [ ] Box No. VIII Certain observations on the international application

2. **FURTHER ACTION**

If a demand for international preliminary examination is made, this opinion will be considered to be a written opinion of the International Preliminary Examining Authority ("IPEA") except that this does not apply where the applicant chooses an Authority other than this one to be the IPEA and the chosen IPEA has notified the International Bureau under Rule 66.1bis(b) that written opinions of this International Searching Authority will not be so considered.

If this opinion is, as provided above, considered to be a written opinion of the IPEA, the applicant is invited to submit to the IPEA a written reply together, where appropriate, with amendments, before the expiration of 3 months from the date of mailing of Form PCT/ISA/220 or before the expiration of 22 months from the priority date, whichever expires later.
For further options, see Form PCT/ISA/220.

Name and mailing address of the ISA/KR	Date of completion of this opinion	Authorized officer
Korean Intellectual Property Office Government Complex-Daejeon, 189 Cheongsa-ro, Seo-gu, Daejeon 302-701, Republic of Korea Facsimile No. 82-42-472-7140	24 OCTOBER 2011 (24.10.2011)	LEE, Young Wan Telephone No.82-42-481-5560

WRITTEN OPINION OF THE INTERNATIONAL SEARCHING AUTHORITY

International application No.
PCT/US2011/024804

Box No. I Basis of this opinion

1. With regard to the **language**, this opinion has been established on the basis of:

   ☒ the international application in the language in which it was filed

   ☐ a translation of the international application into _____, which is the language of a translation furnished for the purposes of international search (Rules 12.3(a) and 23.1(b))

2. ☐ This opinion has been established taking into account the **rectification of an obvious mistake** authorized by or notified to this Authority under Rule 91 (Rule 43*bis*.1(a))

3. With regard to any **nucleotide and/or amino acid sequence** disclosed in the international application, this opinion has been established on the basis of:

   a. a sequence listing filed or furnished
      ☐ on paper
      ☐ in electronic form

   b. time of filing or furnishing
      ☐ contained in the international application as filed.
      ☐ filed together with the international application in electronic form.
      ☐ furnished subsequently to this Authority for the purposes of search.

4. ☐ In addition, in the case that more than one version or copy of a sequence listing has been filed or furnished, the required statements that the information in the subsequent or additioanl copies is identical to that in the application as filed or does not go beyond the application as filed, as appropriate, were furnished.

5. Additional comments:

WRITTEN OPINION OF THE INTERNATIONAL SEARCHING AUTHORITY

International application No.
PCT/US2011/024804

Box No. V Reasoned statement under Rule 43bis.1(a)(i) with regard to novelty, inventive step or industrial applicability; citations and explanations supporting such statement

1. Statement

Novelty (N)	Claims	1-21	YES
	Claims	NONE	NO
Inventive step (IS)	Claims	1-21	YES
	Claims	NONE	NO
Industrial applicability (IA)	Claims	1-21	YES
	Claims	NONE	NO

2. Citations and explanations :

Reference is made to the following documents:

D1: US 04053576 A (EDWARD A. FLETCHER) 11 October 1977
D2: US 04519342 A (HEEYOUNG YOON) 28 May 1985
D3: US 2003-0190569 A1 (CHARLES ANTHONY DAFFT et al.) 09 October 2003
D4: US 06155212 A (ROY E. MCALISTER) 05 December 2000

1. Novelty and Inventive Step

1.1 Claims 1-14

The subject matter of claim 1 differs from that of the prior art documents in disclosing a method for processing a hydrogen donor, comprising: dissociating a hydrogen donor into dissociation products by adding energy to the hydrogen donor, wherein the energy includes waste heat; and providing at least one of (a) a structural building block based on at least one of carbon, nitrogen, boron, silicon, sulfur and a transition metal, and (b) a hydrogen-based fuel. And it is not obvious to a person skilled in the art by the documents, taken alone or in combination. Therefore, claim 1 meets the requirements of PCT Article 33(2) and (3) with respect to novelty and inventive step.

Claims 2-14 are dependent on claim 1 and therefore meet the requirements of PCT Article 33(2) and (3).

1.2 Claims 15-19

The subject matter of claim 15 differs from that of the prior art documents in disclosing a method for processing a hydrogen donor, comprising: dissociating a first hydrogen donor mass into first dissociation products; providing at least one of a structural building block and a hydrogen-based fuel; transferring heat; and dissociating a second hydrogen donor mass into second dissociation products. And it is not obvious to a person skilled in the art by the documents, taken alone or in combination. Therefore, claim 15 meets the requirements of PCT Article 33(2) and (3) with respect to novelty and inventive step.

Claims 16-19 are dependent on claim 15 and therefore meet the requirements of PCT Article 33(2) and (3).

1.3 Claims 20-21

The subject matter of claim 20 differs from that of the prior art documents in disclosing a method for processing a hydrocarbon, comprising: dissociating a first hydrocarbon mass into first dissociation products by adding energy to the hydrocarbon mass; providing a carbon-based structural building block and a hydrogen-based fuel; transferring heat; and dissociating a second hydrocarbon mass into second dissociation products. And it is not obvious to a person skilled in the art by the documents, taken alone or in combination. Therefore, claim 20 meets the requirements of PCT Article 33(2) and (3) with respect to novelty and inventive step.

(Continued on Supplemental Box.)

Supplemental Box

In case the space in any of the preceding boxes is not sufficient.
Continuation of:

Box V.

Claim 21 is dependent on claim 20 and therefore meets the requirements of PCT Article 33(2) and (3).

2. Industrial Applicability

Claims 1-21 are industrially applicable under PCT Article 33(4).

(12) INTERNATIONAL APPLICATION PUBLISHED UNDER THE PATENT COOPERATION TREATY (PCT)

(19) World Intellectual Property Organization
International Bureau

(43) International Publication Date
18 August 2011 (18.08.2011)

PCT

(10) International Publication Number
WO 2011/100724 A2

(51) International Patent Classification:
C01B 3/36 (2006.01) *B01J 19/24* (2006.01)
B01J 19/08 (2006.01) *C01B 31/02* (2006.01)

(21) International Application Number:
PCT/US2011/024804

(22) International Filing Date:
14 February 2011 (14.02.2011)

(25) Filing Language: English

(26) Publication Language: English

(30) Priority Data:
61/304,403 13 February 2010 (13.02.2010) US
12/804,509 21 July 2010 (21.07.2010) US

(72) Inventor; and
(71) Applicant : **MCALISTER, Roy, Edward** [US/US]; 2350 W Shangri La, Phoenix, AZ 85029 (US).

(74) Agents: **WECHKIN, John, M.** et al.; Perkins Coie LLP, P.O. Box 1247, Seattle, WA 98111-1247 (US).

(81) Designated States *(unless otherwise indicated, for every kind of national protection available)*: AE, AG, AL, AM, AO, AT, AU, AZ, BA, BB, BG, BH, BR, BW, BY, BZ, CA, CH, CL, CN, CO, CR, CU, CZ, DE, DK, DM, DO, DZ, EC, EE, EG, ES, FI, GB, GD, GE, GH, GM, GT, HN, HR, HU, ID, IL, IN, IS, JP, KE, KG, KM, KN, KP, KR, KZ, LA, LC, LK, LR, LS, LT, LU, LY, MA, MD, ME, MG, MK, MN, MW, MX, MY, MZ, NA, NG, NI, NO, NZ, OM, PE, PG, PH, PL, PT, RO, RS, RU, SC, SD, SE, SG, SK, SL, SM, ST, SV, SY, TH, TJ, TM, TN, TR, TT, TZ, UA, UG, US, UZ, VC, VN, ZA, ZM, ZW.

(84) Designated States *(unless otherwise indicated, for every kind of regional protection available)*: ARIPO (BW, GH, GM, KE, LR, LS, MW, MZ, NA, SD, SL, SZ, TZ, UG, ZM, ZW), Eurasian (AM, AZ, BY, KG, KZ, MD, RU, TJ, TM), European (AL, AT, BE, BG, CH, CY, CZ, DE, DK, EE, ES, FI, FR, GB, GR, HR, HU, IE, IS, IT, LT, LU, LV, MC, MK, MT, NL, NO, PL, PT, RO, RS, SE, SI, SK, SM, TR), OAPI (BF, BJ, CF, CG, CI, CM, GA, GN, GQ, GW, ML, MR, NE, SN, TD, TG).

Published:

— *without international search report and to be republished upon receipt of that report (Rule 48.2(g))*

(54) Title: CHEMICAL PROCESSES AND REACTORS FOR EFFICIENTLY PRODUCING HYDROGEN FUELS AND STRUCTURAL MATERIALS, AND ASSOCIATED SYSTEMS AND METHODS

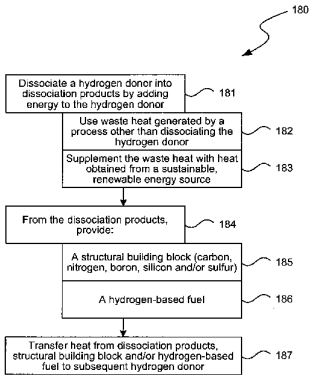

FIG. 1

(57) Abstract: Chemical processes and reactors for efficiently producing hydrogen fuels and structural materials and associated systems and methods. A representative process includes dissociating a hydrogen donor into dissociation products by adding energy to the hydrogen donor, wherein the energy includes waste heat generated by a process other than dissociating the hydrogen donor. The process can further include providing, from the dissociation products, a structural building block and/or a hydrogen-based fuel, with the structural building block based on carbon, nitrogen, boron, silicon, sulfur, and/or a transition metal.

WO 2011/100724 A2

CHEMICAL PROCESSES AND REACTORS FOR EFFICIENTLY PRODUCING HYDROGEN FUELS AND STRUCTURAL MATERIALS, AND ASSOCIATED SYSTEMS AND METHODS

CROSS-REFERENCE TO RELATED APPLICATIONS

[0001] The present application claims priority to and the benefit of U.S. Patent Application No. 61/304,403, filed on February 13, 2010 and titled FULL SPECTRUM ENERGY AND RESOURCE INDEPENDENCE. The present application is a continuation in part of U.S. Patent Application No. 12/804,509, filed on July 21, 2010 and titled METHOD AND SYSTEM OF THERMOCHEMICAL REGENERATION TO PROVIDE OXYGENATED FUEL, FOR EXAMPLE, WITH FUEL-COOLED FUEL INJECTORS, which claims priority to and the benefit of U.S. Provisional Application No. 61/237,425, filed August 27, 2009 and titled OXYGENATED FUEL PRODUCTION; U.S. Provisional Application No. 61/237,466, filed August 27, 2009 and titled MULTIFUEL MULTIBURST; U.S. Provisional Application No. 61/237,479, filed August 27, 2009 and titled FULL SPECTRUM ENERGY; PCT Application No. PCT/US09/67044, filed December 7, 2009 and titled INTEGRATED FUEL INJECTORS AND IGNITERS AND ASSOCIATED METHODS OF USE AND MANUFACTURE; U.S. Provisional Application No. 61/304,403, filed February 13, 2010 and titled FULL SPECTRUM ENERGY AND RESOURCE INDEPENDENCE; and U.S. Provisional Application No. 61/312,100, filed March 9, 2010 and titled SYSTEM AND METHOD FOR PROVIDING HIGH VOLTAGE RF SHIELDING, FOR EXAMPLE, FOR USE WITH A FUEL INJECTOR. U.S. Patent Application No. 12/804,509 is also a continuation-in-part of U.S. Patent Application No. 12/653,085, filed December 7, 2009 and titled INTEGRATED FUEL INJECTORS AND IGNITERS AND ASSOCIATED METHODS OF USE AND MANUFACTURE; which is a continuation-in-part of U.S. Patent Application No. 12/006,774 (now U.S. Patent No. 7,628,137), filed January 7, 2008 and titled MULTIFUEL STORAGE, METERING, AND IGNITION SYSTEM; and which claims priority to and the benefit of U.S. Provisional Application No. 61/237,466, filed August 27, 2009 and titled MULTIFUEL

MULTIBURST. U.S. Patent Application No. 12/804,509 is also a continuation-in-part of U.S. Patent Application No. 12/581,825, filed October 19, 2009 and titled MULTIFUEL STORAGE, METERING, AND IGNITION SYSTEM; which is a divisional of U.S. Patent Application No. 12/006,774 (now U.S. Patent No. 7,628,137), filed January 7, 2008 and titled MULTIFUEL STORAGE, METERING, AND IGNITION SYSTEM. Each of these applications is incorporated herein by reference in its entirety. To the extent the foregoing application and/or any other materials incorporated herein by reference conflict with the disclosure presented herein, the disclosure herein controls.

TECHNICAL FIELD

[0002] The present application is directed generally to chemical processes and reactors for efficiently producing hydrogen fuels and structural materials, and associated systems and methods. In particular embodiments, such processes can be used to produce clean-burning, hydrogen-based fuels from a wide variety of feedstocks, and can produce structural building blocks from carbon and/or other elements that are released when forming the hydrogen-based fuels.

BACKGROUND

[0003] Renewable energy sources such as solar, wind, wave, falling water, and biomass-based sources have tremendous potential as significant energy sources, but currently suffer from a variety of problems that prohibit widespread adoption. For example, using renewable energy sources in the production of electricity is dependent on the availability of the sources, which can be intermittent. Solar energy is limited by the sun's availability (i.e., daytime only), wind energy is limited by the variability of wind, falling water energy is limited by droughts, and biomass energy is limited by seasonal variances, among other things. As a result of these and other factors, much of the energy from renewable sources, captured or not captured, tends to be wasted.

[0004] The foregoing inefficiencies associated with capturing and saving energy limit the growth of renewable energy sources into viable energy providers for many regions of the world, because they often lead to high costs of producing energy.

Thus, the world continues to rely on oil and other fossil fuels as major energy sources because, at least in part, government subsidies and other programs supporting technology developments associated with fossil fuels make it deceptively convenient and seemingly inexpensive to use such fuels. At the same time, the replacement cost for the expended resources, and the costs of environment degradation, health impacts, and other by-products of fossil fuel use are not included in the purchase price of the energy resulting from these fuels.

[0005] In light of the foregoing and other drawbacks currently associated with sustainably producing renewable resources, there remains a need for improving the efficiencies and commercial viabilities of producing products and fuels with such resources.

BRIEF DESCRIPTION OF THE DRAWINGS

[0006] Figure 1 is a flow diagram illustrating a process for efficiently producing hydrogen-based fuels and constituents for building durable goods in accordance with an embodiment of the presently disclosed technology.

[0007] Figure 2 is a partially schematic, partially cross-sectional illustration of a system that receives energy from waste heat and/or renewable energy sources in accordance with an embodiment of the presently disclosed technology.

[0008] Figure 3 is a partially schematic illustration of a system that includes a reactor in combination with counter-flow heat exchangers in accordance with an embodiment of the presently disclosed technology.

[0009] Figure 4 is a diagram showing an architectural construct having a molecular structure in accordance with an embodiment of the presently disclosed technology.

[0010] Figure 5 an isometric view of an architectural construct configured as a solid mass in accordance with an embodiment of the presently disclosed technology.

[0011] Figure 6 is a cross-sectional side view of an architectural construct having parallel layers in accordance with an embodiment of the presently disclosed technology.

[0012] Figure 7 is a side view of an architectural construct having interconnected parallel layers in accordance with an embodiment of the presently disclosed technology.

[0013] Figure 8 is a cross-sectional side view of an architectural construct having parallel layers in accordance with an embodiment of the presently disclosed technology.

[0014] Figure 9 is a cross-sectional side view of an architectural construct having concentric tubular layers in accordance with an embodiment of the presently disclosed technology.

DETAILED DESCRIPTION

Overview

[0015] Several examples of devices, systems and methods for efficiently producing hydrogen fuels and structural materials are described below. The efficiencies can result from using waste heat produced by other processes, renewable energy sources, and/or internal heat exchangers (e.g., counterflow or counter-current heat exchangers). The processes can produce clean-burning fuel and can re-purpose carbon and/or other constituents for use in durable goods, including polymers and carbon composites. Although the following description provides many specific details of the following examples in a manner sufficient to enable a person skilled in the relevant art to practice, make and use them, several of the details and advantages described below may not be necessary to practice certain examples of the technology. Additionally, the technology may include other examples that are within the scope of the claims but are not described here in detail.

[0016] References throughout this specification to "one example," "an example," "one embodiment" or "an embodiment" mean that a particular feature,

structure, process or characteristic described in connection with the example is included in at least one example of the present technology. Thus, the occurrences of the phrases "in one example," "in an example," "one embodiment" or "an embodiment" in various places throughout this specification are not necessarily all referring to the same example. Furthermore, the particular features, structures, routines, steps or characteristics may be combined in any suitable manner in one or more examples of the technology. The headings provided herein are for convenience only and are not intended to limit or interpret the scope or meaning of the claimed technology.

[0017] Certain embodiments of the technology described below may take the form of computer-executable instructions, including routines executed by a programmable computer or controller. Those skilled in the relevant art will appreciate that the technology can be practiced on computer or controller systems other than those shown and described below. The technology can be embodied in a special-purpose computer, controller, or data processor that is specifically programmed, configured or constructed to perform one or more of the computer-executable instructions described below. Accordingly, the terms “computer” and “controller” as generally used herein refer to any data processor and can include internet appliances, hand-held devices, multi-processor systems, programmable consumer electronics, network computers, mini-computers, and the like. The technology can also be practiced in distributed environments where tasks or modules are performed by remote processing devices that are linked through a communications network. Aspects of the technology described below may be stored or distributed on computer-readable media, including magnetic or optically readable or removable computer discs as well as media distributed electronically over networks. In particular embodiments, data structures and transmissions of data particular to aspects of the technology are also encompassed within the scope of the present technology. The present technology encompasses both methods of programming computer-readable media to perform particular steps, as well as executing the steps.

[0018] A method in accordance with a particular embodiment includes dissociating a hydrogen donor into dissociation products by adding energy to the

hydrogen donor, with the energy including waste heat generated by a process other than dissociating the hydrogen donor. For example, the waste heat can be obtained from the products of a combustion process. The method can further include providing a hydrogen-based fuel and/or a structural building block that includes carbon, nitrogen, boron, silicon, sulfur, and/or a transition metal. The structural building block and the hydrogen-based fuel are provided from the dissociation products, and in particular embodiments, are formed from the dissociation products.

[0019] A method in accordance with another embodiment of the technology includes dissociating a first hydrogen donor mass into first dissociation products and, from the first dissociation products, providing a hydrogen-based fuel and/or a structural building block based on carbon, nitrogen, boron, silicon, sulfur, and/or a transition metal. The method can further include transferring heat from the structural building block, the dissociation products, and/or the hydrogen-based fuel to a second hydrogen donor mass, and dissociating the second hydrogen donor mass into second dissociation products. Transferring heat from the process of dissociating the first hydrogen donor to the process of dissociating the second hydrogen donor can reduce the amount of energy required to dissociate the second hydrogen donor and can accordingly improve the overall efficiency of the process.

[0020] Figure 1 is a flow diagram illustrating a representative process in accordance with several embodiments of the present technology. Figures 2 and 3 illustrate representative reactors in which such processes can be conducted, and Figures 4-9 illustrate architectural constructs that can be formed using the methods described herein.

Representative Processes

[0021] Figure 1 is a flow diagram illustrating a chemical process 180 for forming hydrogen-based fuels and constituents (e.g., architectural constructs) for forming durable goods in accordance with an embodiment of the present technology. Process portion 181 includes dissociating a hydrogen donor into dissociation products by adding energy to the hydrogen donor. In many instances, the hydrogen donor

includes a hydrocarbon, but in other embodiments, the hydrogen donor can include carbon-based compounds other than hydrocarbon fuels (e.g., carbohydrates, alcohols, esters, cellulose and/or others). In still further embodiments, the hydrogen donor can include hydrogen atoms in combination with elements other than carbon. For example, nitrogenous compounds (e.g., ammonia and/or urea) can serve a similar function. In any of these embodiments, the energy added to the hydrogen donor to produce the dissociation products can be obtained from waste heat generated by a process other than dissociating the hydrogen donor (process portion 182). For example, process portion 182 can include re-using waste heat from an internal combustion engine or other engine to drive the process of dissociating the hydrogen donor. In other embodiments, the heat can be obtained from fuel cells, regenerative braking or other sources. In general, the heat is available at a temperature high enough to readily transfer to a process or reaction zone, or, in cases of lower grade heat, the heat can be converted to a higher temperature output via another process.

[0022] In at least some of the foregoing embodiments, the waste heat identified in process portion 182 may be insufficient by itself to carry out the chemical dissociation identified in process portion 181. Accordingly, process portion 183 includes supplementing the waste heat with heat that is obtained from a sustainable, renewable energy source, if possible. As used herein, the terms “sustainable” and “renewable” in the context of energy sources refer generally to sources that do not require rapidly depleting energy stores that take a significantly longer time to replace. For example, these terms can include solar energy, wave energy, wind energy, geothermal energy, tidal energy, and falling water energy, but do not include fossil fuel energy.

[0023] Process portion 184 includes providing useful end products from the dissociation products formed in process portion 181. The end products can include a structural building block (as identified in process portion 185) and/or a hydrogen-based fuel (as identified in process portion 186). The structural building block includes compositions that may be further processed to produce architectural constructs. For example, the structural building blocks can include compounds or molecules resulting

from the dissociation process and can include carbon, boron, nitrogen, silicon, sulfur, and/or transition metals. In general, the building block element does not include hydrogen. In a specific example, methane is dissociated to form hydrogen and carbon dioxide or carbon monoxide (structural building blocks). The carbon dioxide and/or carbon monoxide can be further processed to form polymers, graphene, carbon fiber, and/or another architectural construct. The architectural construct can include a self-organized structure (e.g., a crystal) formed from any of a variety of suitable elements, including the elements described above (carbon, nitrogen, boron, silicon, sulfur, and/or transition metals). In any of these embodiments, the architectural construct can form durable goods, e.g., graphene or carbon composites, and/or other structures described further with reference to Figures 4-9. In other embodiments, the structural building blocks can form polymer films or other durable goods.

[0024] The hydrogen-based fuel identified in process portion 186 can include diatomic hydrogen, or a hydrogen compound that is suitable for use as a fuel. In general, the hydrogen-based fuel will have a higher energy and/or provide improved combustion characteristics and/or prevent or reduce pollution, when compared to the hydrogen donor from which it is formed. For example, the hydrogen-based fuel can have a greater dissociation energy than the dissociation energy of the hydrogen donor, by virtue of the energy added to the constituents of the hydrogen-based fuel during dissociation (and in at least some cases), subsequent processes. Process portion 187 includes transferring heat from the dissociation products, the structural building block, and/or the hydrogen-based fuel to a subsequent hydrogen donor. For example, process portion 187 can include transferring heat from hot dissociation products (which were heated in an endothermic dissociation process) to an incoming mass or volume of a hydrogen donor. This arrangement of counter-current or counter-flow heat exchange makes use of heat which would otherwise be wasted when the relevant constituent is cooled for subsequent use, and accordingly improves the overall efficiency of the process. In particular embodiments, the process can include extracting work from the thermal and/or pressure potential energy of the dissociation products, the structural building block, and/or the hydrogen-based fuel prior to removing additional heat from

these constituents for any of a variety of purposes including storage. The work can be performed by a turbine, heat engine, fuel cell or other suitable device.

[0025] In particular embodiments, the hydrogen donor identified in process portion 181 can include methane. The methane itself can be obtained from a variety of suitable sources. In at least some embodiments, the sources include renewable sources, for example, methane obtained from the anaerobic digestion of a renewable biomass, or from landfills. Equations 1-4, identified below, depict endothermic reactions in which methane is dissociated to form hydrogen and carbon or a carbon compound.

$$CH_4 + HEAT_1 \rightarrow C + 2H_2 \qquad \text{Equation 1}$$

$$CH_4 + H_2O + HEAT_2 \rightarrow CO + 3H_2 \qquad \text{Equation 2}$$

$$CH_4 + CO_2 + HEAT_3 \rightarrow 2CO + 2H_2 \qquad \text{Equation 3}$$

$$C_6H_{10}O_5 + HEAT_4 \rightarrow CH_3OH + 4CO + 3H_2 + C \qquad \text{Equation 4}$$

[0026] In particular embodiments, the forgoing endothermic reactions may be used in conjunction with an exothermic reaction to further process the hydrogen-based fuel. For example, Equation 5 below represents an exothermic reaction that uses the dissociation products of Equation 2 or Equation 3 to form methanol.

$$2CO + 2H_2 \rightarrow CH_3OH + HEAT \qquad \text{Equation 5}$$

[0027] In some instances, it is beneficial to produce methanol rather than diatomic hydrogen due to its enhanced versatility as a fuel, and the ability to store methanol in existing tanks currently used for liquid hydrocarbon fuels. Further details of combined exothermic and endothermic reactions and the associated heat exchange processes that can be exploited with such combinations are disclosed in co-pending U.S. Application No. _____ titled "REACTOR VESSELS WITH PRESSURE AND HEAT TRANSFER FEATURES FOR PRODUCING HYDROGEN-BASED FUELS AND STRUCTURAL ELEMENTS, AND ASSOCIATED SYSTEMS AND METHODS"

(Attorney Docket No. 69545.8616US) filed concurrently herewith and incorporated herein by reference.

[0028] Equation 6 below characterizes another methane conversion process that produces an alkene, e.g., ethylene or ethene.

$$CH_4 + C \rightarrow C_2H_4 \qquad \text{Equation 6}$$

[0029] Ethene has widespread industrial and plant hormone applications. One aspect of the process represented by Equation 6 is that it may not include a hydrogen-based fuel as a product (e.g., unless the ethene is further processed to produce such a fuel). Accordingly, reactions in accordance with the present technology can produce architectural constructs, hydrogen-based fuels, or both.

[0030] In still further embodiments, the hydrogen donor can include elements other than carbon, e.g., nitrogen, as indicated by Equations 7 and 8 below.

$$2NH_3 + HEAT_7 \rightarrow N_2 + 3H_2 \qquad \text{Equation 7}$$

$$NH_3OH + C_xH_yO_z + HEAT_8 \rightarrow CO + N_2 + H_2 \qquad \text{Equation 8}$$

[0031] The $C_xH_yO_z$ constituent can be provided by graphene or another architectural construct loaded with hydrogen.

[0032] The foregoing processes can be conducted in an autogenous manner. In particular, the carbon, nitrogen, and/or other constituents resulting from producing the hydrogen-based fuel can be controlled and reinvested in useful end products, rather than being released into the environment where they can accumulate to toxic levels. The result of this type of cycle can mimic naturally occurring carbon and nitrogen cycles. It is expected that implementing such cycles can result in a higher carrying capacity of the earth (e.g., a higher capacity for human population) without a decrease in the quality of living and in fact, with an expected increase in the quality of living. Accordingly, processes that deplete finite resources, toxify the environment, and/or waste or fail to reinvest or utilize output products are not considered autogenous. One

aspect of the presently disclosed technology is to make forming hydrogen-based fuels more autogenous.

Representative Reactors

[0033] The foregoing reactions may be conducted in a wide variety of reactors described in several co-pending patent applications assigned to the assignee of the present application. Aspects of a representative reactor are described in general terms with respect to Figures 2 and 3 below, and are disclosed in greater detail in co-pending U.S. Patent Application No. _____ titled "REACTOR VESSELS WITH TRANSMISSIVE SURFACES FOR PRODUCING HYDROGEN-BASED FUELS AND STRUCTURAL ELEMENTS, AND ASSOCIATED SYSTEMS AND METHODS" (Attorney Docket No. 69545.8602) filed concurrently herewith and incorporated herein by reference.

[0034] Figure 2 is a partially schematic illustration of a representative system 100 that includes a reactor 110. The reactor 110 further includes a reactor vessel 111 that encloses or partially encloses a reaction zone 112. In at least some instances, the reactor vessel 111 has one or more transmissive surfaces positioned to facilitate the chemical reaction taking place within the reaction zone 112. In a representative example, the reactor vessel 111 receives a hydrogen donor provided by a donor source 130 to a donor entry port 113. For example, the hydrogen donor can include methane or another hydrocarbon. A donor distributor or manifold 115 within the reactor vessel 111 disperses or distributes the hydrogen donor into the reaction zone 112. The reactor vessel 111 also receives steam from a steam/water source 140 via a steam entry port 114. A steam distributor 116 in the reactor vessel 111 distributes the steam into the reaction zone 112. The reactor vessel 111 can further include a heater 123 that supplies heat to the reaction zone 112 to facilitate endothermic reactions. The power for the heater (e.g., electrical power) can be provided by a renewable energy source 165. As described above, the renewable energy source 165 can include a solar, wind, water and/or other suitable sustainable sources. The reactions performed at the reaction zone 112 can include dissociating methane or another hydrocarbon into hydrogen or a hydrogen compound, and carbon or a carbon compound, (as discussed

above with reference to Equations 1-6), or nitrogen or a nitrogen compound (as discussed above with reference to Equations 7-8). The products of the reaction exit the reactor vessel 111 via an exit port 117 and are collected at a reaction product collector 160a.

[0035] The system 100 can further include a source 150 of radiant energy (e.g., waste heat) and/or additional reactants, which provides constituents to a passage 118 within the reactor vessel 111. For example, the heat/reactant source 150 can include a combustion chamber 151 that provides hot combustion products 152 to the passage 118, as indicated by arrow A. The combustion products 152 and associated waste heat are produced by a process separate from the dissociation process (e.g., a power generation process). A combustion products collector 160b collects combustion products exiting the reactor vessel 111 for further recycling and/or other uses. In a particular embodiment, the combustion products 152 can include hot carbon dioxide, carbon monoxide, water vapor, and/or other constituents. One or more transmissive surfaces 119 are positioned between the reaction zone 112 (which can be disposed annularly around the passage 118) and an interior region 120 of the passage 118. The transmissive surface 119 can accordingly allow radiant energy and/or a chemical constituent to pass radially outwardly from the passage 118 into the reaction zone 112, as indicated by arrows B. By delivering the radiant energy (e.g., heat) and/or chemical constituent(s) provided by the flow of combustion products 152, the system 100 can enhance the reaction taking place in the reaction zone 112, for example, by increasing the reaction zone temperature and/or pressure, and therefore the reaction rate, and/or the thermodynamic efficiency of the reaction. The foregoing process can accordingly recycle or reuse energy and/or constituents that would otherwise be wasted, in addition to facilitating the reaction at the reaction zone 112.

[0036] The composition and structure of the transmissive surface 119 can be selected to allow radiant energy to readily pass from the interior region 120 of the passage 118 to the reaction zone 112. Accordingly, the transmissive surface 119 can include glass, graphene, or a re-radiative component. Suitable re-radiative components are described further in co-pending U.S. Application No. _____ titled "CHEMICAL

REACTORS WITH RE-RADIATING SURFACES AND ASSOCIATED SYSTEMS AND METHODS" (Attorney Docket No. 69545.8603US), filed concurrently herewith and incorporated herein by reference.

[0037] As noted above, the combustion products 152 can include steam and/or other constituents that may serve as reactants in the reaction zone 112. Accordingly, the transmissive surface 119 can be manufactured to selectively allow such constituents into the reaction zone 112, in addition to or in lieu of admitting radiant energy into the reaction zone 112. In a particular embodiment, the transmissive surface 119 can be formed from a carbon crystal structure, for example, a layered graphene structure. The carbon-based crystal structure can include spacings (e.g., between parallel layers oriented transverse to the flow direction A) that are deliberately selected to allow water molecules to pass through as a result of a pressure, temperature, impedance, and/or concentration gradient. At the same time, the spacings can be selected to prevent useful reaction products produced in the reaction zone 112 from passing out of the reaction zone. Accordingly, the transmissive surface 119 can be formed by using the same type of architectural constructs produced directly or indirectly by processes conducted in the reactor 110. This loop represents one example of an autogenous cycle in which a process is used to form a product that increases the efficiency of the process.

[0038] The system 100 can further include a controller 190 that receives input signals 191 (e.g., from sensors) and provides output signals 192 (e.g., control instructions) based at least in part on the inputs 191. Accordingly, the controller 190 can include suitable processor, memory and I/O capabilities. The controller 190 can receive signals corresponding to measured or sensed pressures, temperatures, flow rates, chemical concentrations and/or other suitable parameters, and can issue instructions controlling reactant delivery rates, pressures and temperatures, heater activation, valve settings and/or other suitable actively controllable parameters. An operator can provide additional inputs to modify, adjust and/or override the instructions carried out autonomously by the controller 190.

[0039] Figure 3 is a partially schematic illustration of system 300 that includes a reactor 310 in combination with heat exchangers and separators configured to transfer heat and segregate reaction products in accordance with another embodiment of the disclosure. In a particular aspect of this embodiment, the system 300 includes a steam/water source 340 that provides steam to a reactor vessel 311 to facilitate product formation. Steam from the steam/water source 340 can be provided to the reactor 310 via one or more channels. In a particular embodiment, a first channel includes a first water path 341a that passes through a first heat exchanger 370a and into the reactor vessel 311 via a first steam distributor 316a. Products removed from the reactor vessel 311 pass through a reactor product exit port 317 and along a products path 361. The products path 361 passes through the first heat exchanger 370a in a counter-flow or counter-current manner to cool the products and heat the steam entering the reactor vessel 311. The products continue to a reaction product separator 380a that segregates useful end products (e.g., hydrogen and carbon or carbon compounds) which are then collected at a products collector 360a. Water remaining in the products path 361 can be separated at the reaction product separator 380a and returned to the steam/water source 340.

[0040] A second channel via which the steam/water source 340 provides steam to the reactor 310 includes a second water path 341b that passes through a second heat exchanger 370b. Water proceeding along the second water path 341b enters the reactor 310 in the form of steam via a second stream distributor 316b. This water is heated by combustion products that have exited a radiant energy/reactant source 350 (e.g., exited a combustion chamber 351 at a combustion products outlet 353), and passed through the combustion product passage 318 (which includes a transmissive surface 319) along a combustion products path 354. The spent combustion products are collected at a combustion products collector 360b and can include nitrogen compounds, phosphates, used illuminant additives (e.g., sources of sodium, magnesium and/or potassium), and/or other compositions that may be recycled or used for other purposes (e.g., agricultural purposes.)

[0041] In addition to heating water along the second water path 341b and cooling the combustion products along the combustion products path 354, the second heat exchanger 370b can heat the hydrogen donor passing along a donor path 331 to a donor distributor 315 located within the reactor vessel 311. In particular, the system 300 can include a donor vessel 330 that houses a hydrogen donor, e.g., a hydrocarbon such as methane, or a nitrogenous donor such as ammonia. The donor vessel 330 can include one or more heaters 332 (shown as first heater 332a and a second heater 332b) to vaporize and/or pressurize the hydrogen donor within. A three-way valve 333 and a regulator 334 control the amount of fluid and/or vapor that exits the donor vessel 330 and passes along the donor path 331 through the second heat exchanger 370b and into the reactor vessel 311.

[0042] In the reactor vessel 311, the combustion products 152 pass through the combustion products passage 318 while delivering radiant energy and/or reactants through the transmissive surface 319 into the reaction zone 312. After passing through the second heat exchanger 370b, the combustion products 152 can enter a combustion products separator 380b that separates water from the combustion products. The water returns to the steam/water source 340 and the remaining combustion products are collected at a combustion products collector 360b. In a particular embodiment, the separator 380b can include a centrifugal separator that is driven by the kinetic energy of the combustion product stream. If the kinetic energy of the combustion product stream is insufficient to separate the water by centrifugal force, a motor/generator 381 can add energy to the separator 380b to provide the necessary centrifugal force. If the kinetic energy of the combustion product stream is greater than is necessary to separate water, the motor/generator 381 can produce energy, e.g., to be used by other components of the system 300. The controller 190 receives inputs from the various elements of the system 300 and controls flow rates, pressures, temperatures, and/or other parameters.

[0043] One feature of at least some of the foregoing embodiments is that the reactor system can include internal heat exchangers that reduce internal losses by recycling heat. For example, such heat exchangers can be used to cool the

combustion products and/or chemical reaction products, while heating the reaction zone, incoming steam, and/or other incoming chemical reactants. This arrangement can improve the efficiency with which hydrogen-based fuels and architectural constructs are formed, thus improving the cost-competitive position of these products.

Representative Architectural Constructs

[0044] The process 180 described above with reference to Figure 1 can produce architectural constructs (or associated structural building block precursors) in addition to or in lieu of producing hydrogen-based fuels. Architectural constructs include configurable building block structures that are formed to exhibit useful properties. Architectural constructs can include a synthetic matrix and/or other self-organizing structure or arrangement of crystals. The construct can be carbon-based (e.g., in the case of graphene or graphite), or based on other elements or components (e.g., boron, nitrogen, or boron nitride). The construct can be configured as a solid mass, as layers that are as thin as an atom, or in other arrangements and variations. The configuration of the construct is largely responsible for determining its behavior under a variety of conditions. As a result, the architectural construct can be designed to perform highly specialized tasks in a wide range of applications. Five representative sets of properties are particularly amenable to technological uses: (i) thermal properties; (ii) electromagnetic, optical, and acoustic properties; (iii) catalytic properties; (iv) capillary properties; and (v) sorptive properties. Although they are grouped in the foregoing manner for purposes of discussion, properties from different categories are sometimes interrelated or associated with one another. Accordingly, an architectural construct can be configured to exhibit some or all of the properties discussed throughout this specification.

[0045] The behavior of the architectural construct depends on the composition, dopants, and coatings (including catalysts) that are applied to the construct. When configured as layers, the behavior of the construct also depends on the layer thickness, spacers between layers, the distances separating the layers, and the structures used to support and/or separate the layers. From a macroscopic standpoint, it can be

configured to have a specific density, modulus of elasticity, and/or section modulus. From a microscopic standpoint, the construct can be designed to act as a molecular processor, charge processor, and/or bio processor.

[0046] Figures 4-9 illustrate representative architectural constructs. Further representative constructs are included in co-pending U.S. Application No. _____ titled "ARCHITECTURAL CONSTRUCT HAVING FOR EXAMPLE A PLURALITY OF ARCHITECTURAL CRYSTALS" (Attorney Docket No. 69545.8701US), filed concurrently herewith and incorporated herein by reference. Figure 4 shows a molecular diagram of a layer 400 which can in turn form a matrix arrangement of crystals. The layer 400 can include graphene, which is an atom-thick planar sheet of carbon. Figure 5 shows an isometric view of an architectural construct 500 that is configured as a solid mass. The architectural construct 500 can include, for example, graphite or boron nitride. Architectural constructs configured as a solid mass can include multiple, single-atom-thick layers stacked together. Representative architectural constructs configured as a solid mass are specialized, e.g., altered to behave in a specific way.

[0047] In some implementations, the solid mass is specialized by doping. For example, an architectural construct that includes graphene may have areas that are reacted with boron to form both stoichiometric and non-stoichiometric subsets. The graphene can be further combined with nitrogen and can include both graphene and boron nitride graphene with a nitrogen interface. In some implementations, compounds are built upon the architectural construct. For example, from a boron nitride interface, a designer can build magnesium-aluminum-boron compounds. By specializing an architectural construct in these ways, a designer can create a construct that exhibits different properties than would a construct composed of only one substance.

[0048] Although an atom-thick sheet and solid mass of crystals exhibit many of the properties discussed below, other configurations are capable of yielding a wider range of properties and achieving more useful outcomes. For example, Figure 6 is a cross-sectional side view of an architectural construct 600 having parallel layers in

accordance with an embodiment of the technology. Parallel layers of an architectural construct may be formed from any of a number of suitable substances, such as graphene, graphite, or boron nitride. Parallel layers may be rectangular, circular, or can have other shapes. In Figure 6, the layers are circular and include a hole through which a support tube 610 supports the architectural construct 600. The layers are each separated by a distance 620, creating zones 630 between the layers.

[0049] Architectural constructs can be formed by machining a single crystal into a desired shape and exfoliating the single crystal into layers. U.S. Patent No. 6,503,584 and pending U.S. Patent Application No. 12/857,515, filed on August 16, 2010, entitled "APPARATUSES AND METHODS FOR STORING AND/OR FILTERING A SUBSTANCE," both of which are incorporated herein by reference, describe this and other approaches. In other embodiments the architectural constructs can be built up on a seed material, e.g., using an epitaxial growth process, as disclosed in co-pending U.S. Application No. _____ titled "COUPLED THERMOCHEMICAL REACTORS AND ENGINES, AND ASSOCIATED SYSTEMS AND METHODS" (Attorney Docket No. 69545.8611), filed concurrently herewith and incorporated herein by reference.

[0050] Figure 7 is a side view of an architectural construct 700 that includes parallel layers that are each thicker than one atom. The layers can be supported relative to each other with intermittent spacers 710. The parallel layers can vary from only a few atoms thick to thicknesses of 20 atoms or more.

[0051] In some implementations, all of the layers have the same thickness, while in other implementations individual layers can have different thicknesses. Figure 8 is a cross-sectional side view of an architectural construct 800 that has parallel layers with various different thicknesses. As discussed above, layers thicker than an atom or differing from each other in thicknesses may be exfoliated from a single crystal by controlling the depth that a fluid is diffused into the crystal to exfoliate the layers (e.g., by introducing impurities or dopants at the desired depth).

[0052] Architectural constructs can have parallel layers that are spaced an equal distance as shown in Figure 6 or by unequal distances, as shown in Figure 8.

The distances between the layers of the architectural construct 800 vary in the arrangement shown in Figure 8. For example, the distance between the layers of a first set 810 of layers is greater than the distance between the layers of a second set 820 of layers, meaning that the zones between layers of the first set 810 are larger than those of the second set 820.

[0053] Figure 9 shows a cross-sectional side view of an architectural construct 900 consisting of concentric tubular layers of a matrix characterization of crystals. For example, a first layer 910 of the architectural construct is tubular and has a diameter greater than a second layer 920 of the architectural construct, and the second layer 620 is positioned within the first layer 910. An architectural construct consisting of concentric tubes can be formed in any of several suitable ways. One method, which is discussed generally in U.S. Patent No. 6,503,584, is to dehydrogenate a gas (e.g., a hydrocarbon) within a frame to form the first layer 910 of the architectural construct 900, and to dehydrogenate a substance (e.g., titanium hydride) to form spacers on the inside surface of the first layer before dehydrogenating the gas to form the second layer 920 on the spacers. Subsequent layers can then be deposited in a similar fashion. In some implementations, each tubular layer is formed by dehydrogenating a gas in its own frame. The dehydrogenated layers are then configured within each other in the configuration shown in Figure 9. Spacers can be deposited on either the inside or outside surfaces of the layers to space them apart by a particular distance.

[0054] One feature of the representative architectural constructs described above with reference to Figures 4-9 is that they can be formed using the carbon or other material resulting from dissociating a hydrogen donor molecule into products used for a hydrogen-based fuel. Accordingly, the process of forming the architectural constructs can be performed alongside and/or otherwise in conjunction with forming the hydrogen-based fuels. As described above with reference to Figure 2, the architectural construct can be used to form components of a reactor that is in turn used to form more architectural constructs and hydrogen fuel. Other embodiments include other synergistic combinations of architectural constructs and hydrogen-based fuels. For example, carbon-based constructs including graphene can be packed with hydrogen

(via adsorptive forces) and then formed into a powder that has a greater concentration of hydrogen atoms per unit volume than liquid hydrogen, and is simpler and more convenient to store. In another example, the hydrogen donor can include diesel fuel, and in the reaction, hydrogen that was previously dissociated from a hydrogen donor (diesel fuel or otherwise) can be added to the dissociation reaction to facilitate the dissociation reaction.

[0055] From the foregoing, it will appreciated that specific embodiments of the technology have been described herein for purposes of illustration, but that various modifications may be made without deviating from the technology. For example, certain embodiments of the processes described above were described in the context of methane. In other embodiments, other hydrocarbon fuels or non-carbon-containing hydrogen donors can undergo similar processes to form hydrogen-based fuels and architectural constructs. Other embodiments can use waste heat from sources other than combustion engines and/or can recycle heat internally or between sub-processes in manners other than those expressly described above.

[0056] Certain aspects of the technology described in the context of particular embodiments may be combined or eliminated in other embodiments. For example, certain embodiments were described above in the context of using waste heat as a source of energy for a dissociation process, as well as internal heat exchangers to conserve heat. In other embodiments, either one of the foregoing arrangements can be used individually. Further while advantages associated with certain embodiments of the technology have been described in the context of those embodiments, other embodiments may also exhibit such advantages, and not all embodiments need necessarily exhibit such advantages to fall within the scope of the present disclosure. Accordingly, the present disclosure and associated technology can encompass other embodiments not expressly shown or described herein.

[0057] To the extent not previously incorporated herein by reference, the present application incorporates by reference in their entirety the subject matter of each of the following materials: U.S. Patent Application No. 12/857,553, filed on August 16,

2010 and titled SUSTAINABLE ECONOMIC DEVELOPMENT THROUGH INTEGRATED PRODUCTION OF RENEWABLE ENERGY, MATERIALS RESOURCES, AND NUTRIENT REGIMES; U.S. Patent Application No. 12/857,553, filed on August 16, 2010 and titled SYSTEMS AND METHODS FOR SUSTAINABLE ECONOMIC DEVELOPMENT THROUGH INTEGRATED FULL SPECTRUM PRODUCTION OF RENEWABLE ENERGY; U.S. Patent Application No. 12/857,554, filed on August 16, 2010 and titled SYSTEMS AND METHODS FOR SUSTAINABLE ECONOMIC DEVELOPMENT THROUGH INTEGRATED FULL SPECTRUM PRODUCTION OF RENEWABLE MATERIAL RESOURCES USING SOLAR THERMAL; U.S. Patent Application No. 12/857,502, filed on August 16, 2010 and titled ENERGY SYSTEM FOR DWELLING SUPPORT; Attorney Docket No. 69545-8505.US00, filed on February 14, 2011 and titled DELIVERY SYSTEMS WITH IN-LINE SELECTIVE EXTRACTION DEVICES AND ASSOCIATED METHODS OF OPERATION; U.S. Patent Application No. 61/401,699, filed on August 16, 2010 and titled COMPREHENSIVE COST MODELING OF AUTOGENOUS SYSTEMS AND PROCESSES FOR THE PRODUCTION OF ENERGY, MATERIAL RESOURCES AND NUTRIENT REGIMES; Attorney Docket No. 69545-8602.US00, filed on February 14, 2011 and titled REACTOR VESSELS WITH TRANSMISSIVE SURFACES FOR PRODUCING HYDROGEN-BASED FUELS AND STRUCTURAL ELEMENTS, AND ASSOCIATED SYSTEMS AND METHODS; Attorney Docket No. 69545-8603.US00, filed on February 14, 2011 and titled CHEMICAL REACTORS WITH RE-RADIATING SURFACES AND ASSOCIATED SYSTEMS AND METHODS; Attorney Docket No. 69545-8604.US00, filed on February 14, 2011 and titled THERMAL TRANSFER DEVICE AND ASSOCIATED SYSTEMS AND METHODS; Attorney Docket No. 69545-8605.US00, filed on February 14, 2011 and titled CHEMICAL REACTORS WITH ANNULARLY POSITIONED DELIVERY AND REMOVAL DEVICES, AND ASSOCIATED SYSTEMS AND METHODS; Attorney Docket No. 69545-8606.US00, filed on February 14, 2011 and titled REACTORS FOR CONDUCTING THERMOCHEMICAL PROCESSES WITH SOLAR HEAT INPUT, AND ASSOCIATED SYSTEMS AND METHODS; Attorney Docket No. 69545-8608.US00, filed on February

14, 2011 and titled INDUCTION FOR THERMOCHEMICAL PROCESS, AND ASSOCIATED SYSTEMS AND METHODS; Attorney Docket No. 69545-8611.US00, filed on February 14, 2011 and titled COUPLED THERMOCHEMICAL REACTORS AND ENGINES, AND ASSOCIATED SYSTEMS AND METHODS; U.S. Patent Application No. 61/385,508, filed on September 22, 2010 and titled REDUCING AND HARVESTING DRAG ENERGY ON MOBILE ENGINES USING THERMAL CHEMICAL REGENERATION; Attorney Docket No. 69545-8616.US00, filed on February 14, 2011 and titled REACTOR VESSELS WITH PRESSURE AND HEAT TRANSFER FEATURES FOR PRODUCING HYDROGEN-BASED FUELS AND STRUCTURAL ELEMENTS, AND ASSOCIATED SYSTEMS AND METHODS; Attorney Docket No. 69545-8701.US00, filed on February 14, 2011 and titled ARCHITECTURAL CONSTRUCT HAVING FOR EXAMPLE A PLURALITY OF ARCHITECTURAL CRYSTALS; U.S. Patent Application No. 12/806,634, filed on August 16, 2010 and titled METHODS AND APPARATUSES FOR DETECTION OF PROPERTIES OF FLUID CONVEYANCE SYSTEMS; Attorney Docket No. 69545-8801.US01, filed on February 14, 2011 and titled METHODS, DEVICES, AND SYSTEMS FOR DETECTING PROPERTIES OF TARGET SAMPLES; Attorney Docket No. 69545-9002.US00, filed on February 14, 2011 and titled SYSTEM FOR PROCESSING BIOMASS INTO HYDROCARBONS, ALCOHOL VAPORS, HYDROGEN, CARBON, ETC.; Attorney Docket No. 69545-9004.US00, filed on February 14, 2011 and titled CARBON RECYCLING AND REINVESTMENT USING THERMOCHEMICAL REGENERATION; Attorney Docket No. 69545-9006.US00, filed on February 14, 2011 and titled OXYGENATED FUEL; U.S. Patent Application No. 61/237,419, filed on August 27, 2009 and titled CARBON SEQUESTRATION; U.S. Patent Application No. 61/237,425, filed on August 27, 2009 and titled OXYGENATED FUEL PRODUCTION; Attorney Docket No. 69545-9102.US00, filed on February 14, 2011 and titled MULTI-PURPOSE RENEWABLE FUEL FOR ISOLATING CONTAMINANTS AND STORING ENERGY; U.S. Patent Application No. 61/421,189, filed on December 8, 2010 and titled LIQUID FUELS FROM HYDROGEN, OXIDES OF CARBON, AND/OR NITROGEN; AND PRODUCTION OF CARBON FOR MANUFACTURING DURABLE GOODS; and

Attorney Docket No. 69545-9105.US00, filed on February 14, 2011 and titled ENGINEERED FUEL STORAGE, RESPECIATION AND TRANSPORT.

CLAIMS

I/We claim:

1. A method for processing a hydrogen donor, comprising:

dissociating a hydrogen donor into dissociation products by adding energy to the hydrogen donor, wherein the energy includes waste heat generated by a process other than dissociating the hydrogen donor; and

from the dissociation products, providing at least one of:

(a) a structural building block based on at least one of carbon, nitrogen, boron, silicon, sulfur and a transition metal; and

(b) a hydrogen-based fuel.

2. The method of claim 1 wherein the waste heat includes heat obtained from combustion products.

3. The method of claim 1, further comprising supplementing the waste heat with heat obtained from a sustainable, renewable energy source.

4. The method of claim 3 wherein supplementing the waste heat includes supplementing the waste heat with solar energy.

5. The method of claim 3 wherein supplementing the waste heat includes supplementing the waste heat with wind energy.

6. The method of claim 1 wherein the hydrogen donor has a first energy and the hydrogen-based fuel has a second energy greater than the first.

7. The method of claim 6 wherein the first energy includes a first dissociation energy and wherein the second energy includes a second dissociation energy.

8. The method of claim 1 wherein the process of providing includes providing both the structural building block and the hydrogen-based fuel.

9. The method of claim 8, further comprising forming the structural building block and the hydrogen-based fuel from the dissociation products.

10. The method of claim 1, further comprising forming an architectural construct from the structural building block.

11. The method of claim 10 wherein forming the architectural construct includes forming a graphene construct from dissociated carbon, and wherein the process further comprises:

adsorbing hydrogen to the graphene construct;

releasing the hydrogen from the graphene construct; and

combusting the hydrogen to provide energy for a subsequent process of dissociating a hydrogen donor into dissociation products.

12. The method of claim 1 wherein the hydrogen donor includes ammonia.

13. The method of claim 1 wherein the hydrogen donor includes a hydrocarbon.

14. The method of claim 1, further comprising adding steam to the hydrogen donor.

15. A method for processing a hydrogen donor, comprising:

dissociating a first hydrogen donor mass into first dissociation products;

from the first dissociation products, providing at least one of:

(a) a structural building block based on at least one of carbon, nitrogen, boron, silicon, sulfur and a transition metal; and

(b) a hydrogen-based fuel;

transferring heat from at least one of the structural building block, the dissociation products, and the hydrogen-based fuel to a second hydrogen donor mass; and

dissociating the second hydrogen donor mass into second dissociation products.

16. The method of claim 15 wherein dissociating a first hydrogen donor mass includes dissociating a first hydrocarbon mass.

17. The method of claim 16 wherein dissociating a first hydrocarbon donor mass includes dissociating a first methane mass.

18. The method of claim 15 wherein the first hydrogen donor mass has a first dissociation energy and the hydrogen-based fuel has a second dissociation energy greater than the first.

19. The method of claim 15 wherein the first hydrogen donor mass includes a first mass of diesel fuel, and the second hydrogen donor mass includes a second mass of diesel fuel and wherein the method further comprises adding hydrogen obtained from dissociating the first mass of diesel fuel to the second mass of diesel fuel to aid in dissociating the second mass of diesel fuel.

20. A method for processing a hydrocarbon, comprising:

dissociating a first hydrocarbon mass into first dissociation products by adding energy to the hydrocarbon mass, wherein the energy includes:

(a) waste heat generated by a process other than dissociating the hydrocarbon mass; and

(b) energy from a sustainable energy source, and wherein the first hydrocarbon mass has a first dissociation energy;

from the first dissociation products, providing:

(a) a carbon-based structural building block; and

(b) a hydrogen-based fuel having a second dissociation energy greater than the first dissociation energy;

transferring heat from at least one of the structural building block, the hydrogen-based fuel, and the dissociation products to a second hydrocarbon mass; and

dissociating the second hydrocarbon mass into second dissociation products.

21. The method of claim 20 wherein:

dissociating a first hydrocarbon mass includes dissociating a first mass of methane;

dissociating a second hydrocarbon mass includes dissociating a second mass of methane; and

providing a hydrogen-based fuel includes providing hydrogen released by dissociating the first mass of methane; and wherein the method further comprises

forming graphene from carbon released by dissociating the first mass of methane.

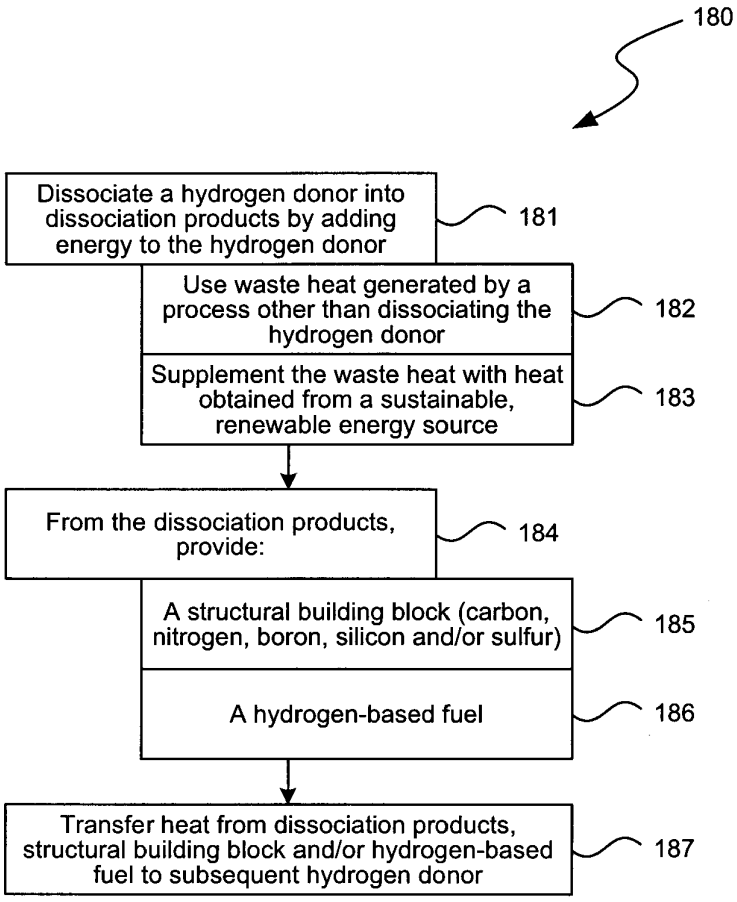
180
Dissociate a hydrogen donor into dissociation products by adding energy to the hydrogen donor
181
Use waste heat generated by a process other than dissociating the hydrogen donor
182
Supplement the waste heat with heat obtained from a sustainable, renewable energy source
183
From the dissociation products, provide:
184
A structural building block (carbon, nitrogen, boron, silicon and/or sulfur)
185
A hydrogen-based fuel
186
Transfer heat from dissociation products, structural building block and/or hydrogen-based fuel to subsequent hydrogen donor
187

FIG. 1

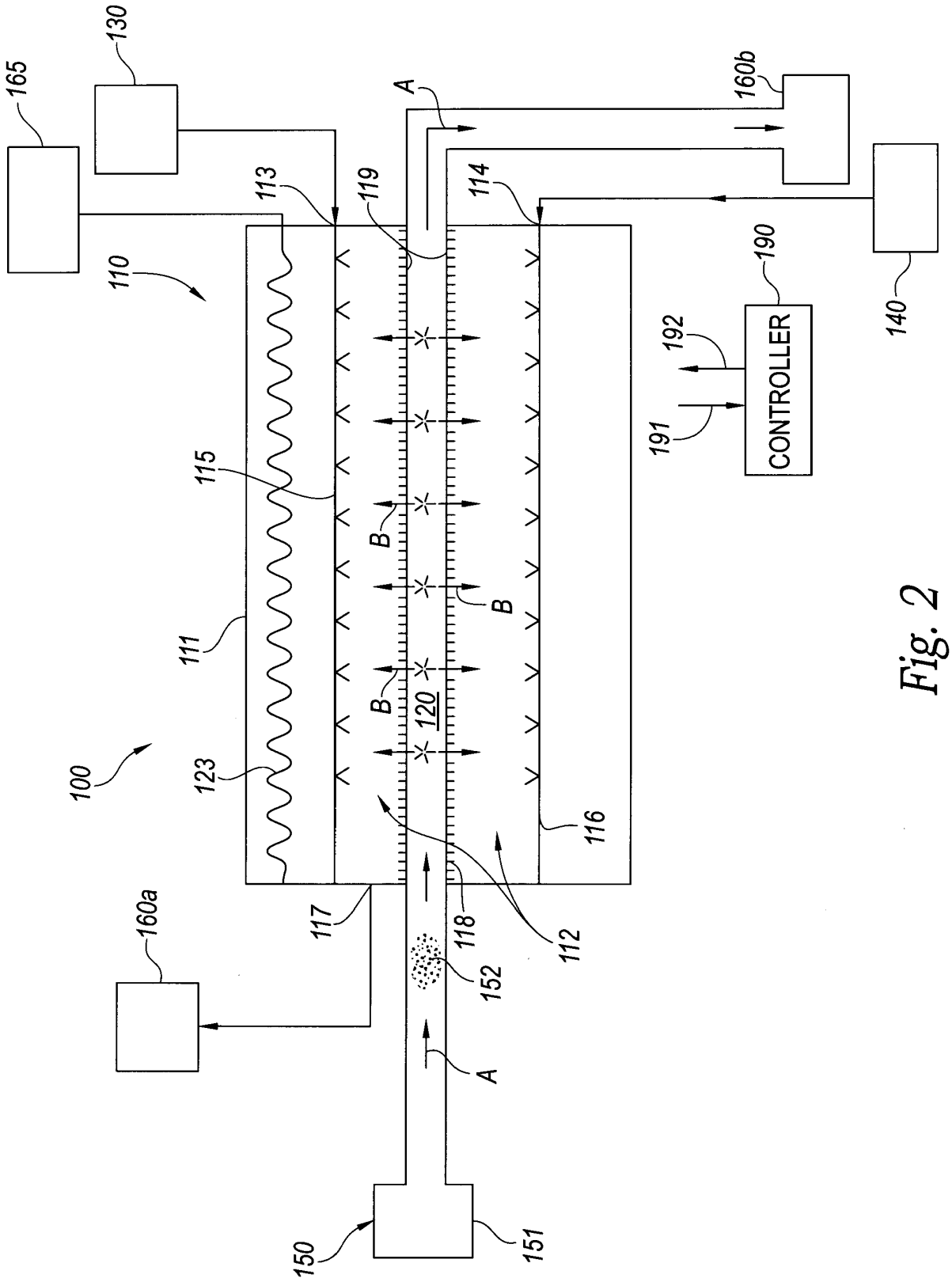
100
110
111
112
113
114
115
116
117
118
119
120
123
130
140
150
151
152
160a
160b
165
190
191
192
CONTROLLER
A
B

Fig. 2

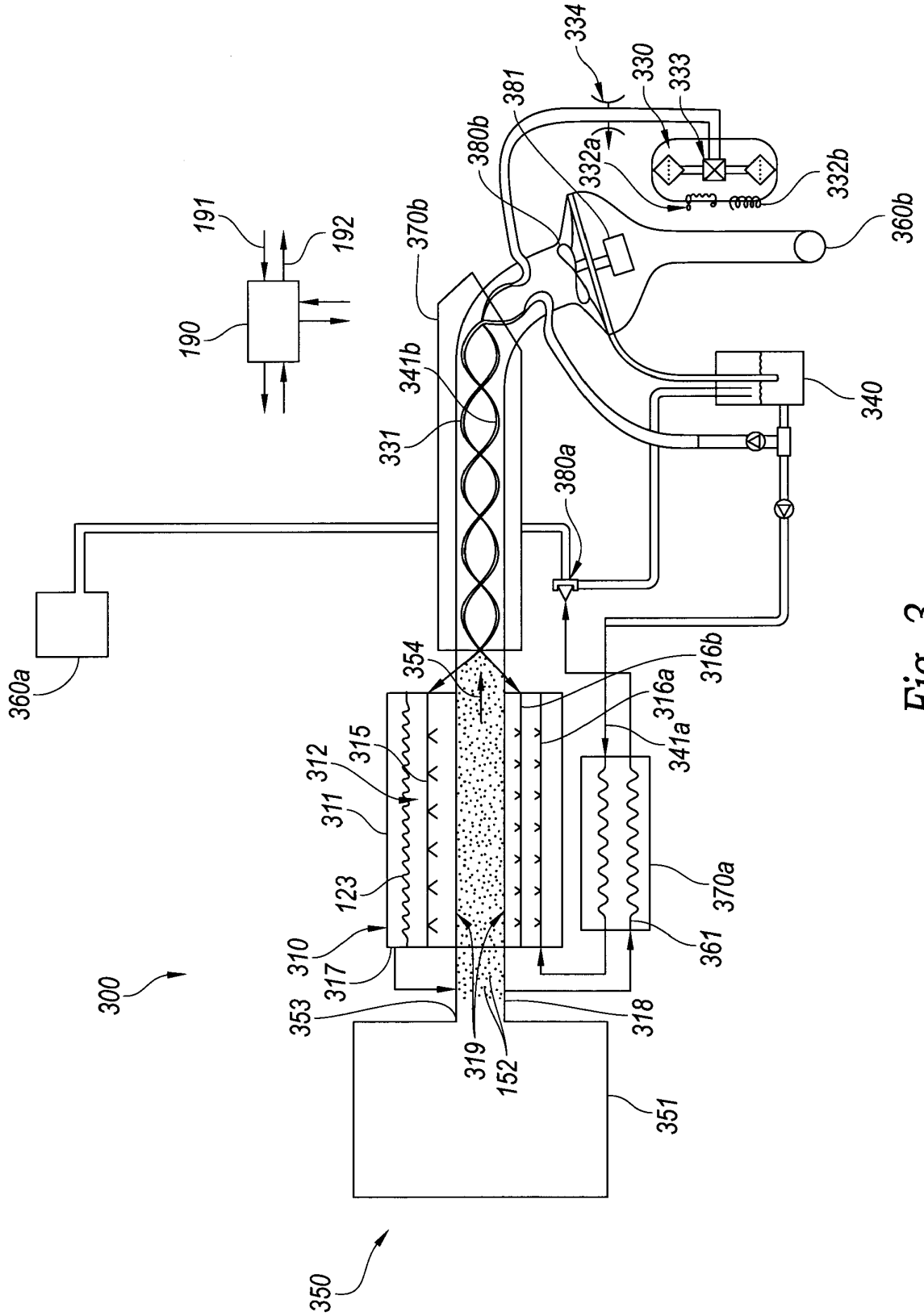
334
330
333
381
380b
332a
332b
360b
191
192
370b
190
341b
340
331
380a
360a
354
316b
316a
341a
315
312
311
123
370a
310
361
317
300
353
318
319
152
351
350

Fig. 3

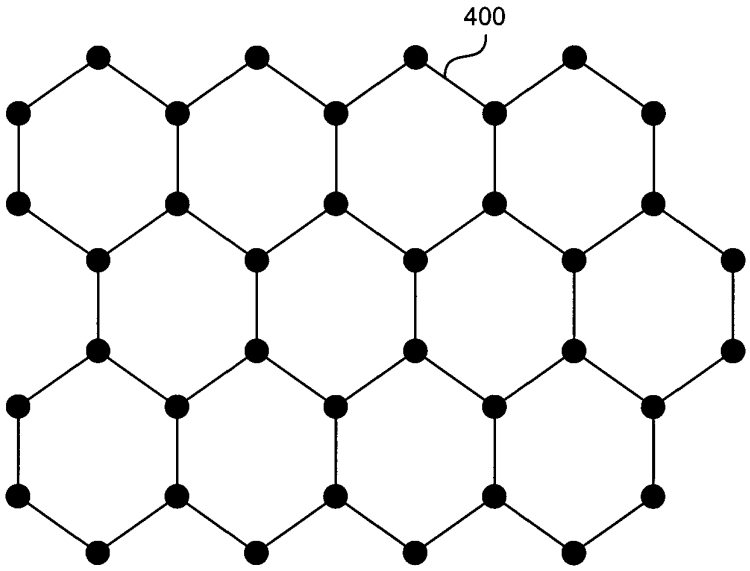

FIG. 4

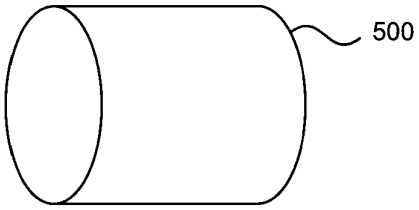

FIG. 5

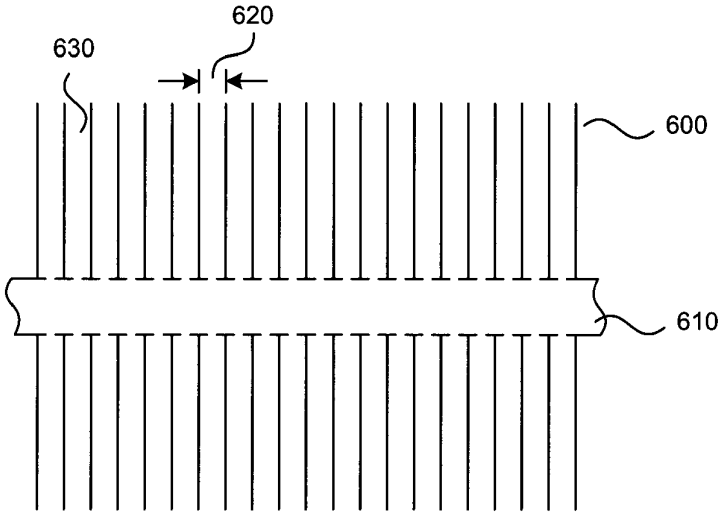

FIG. 6

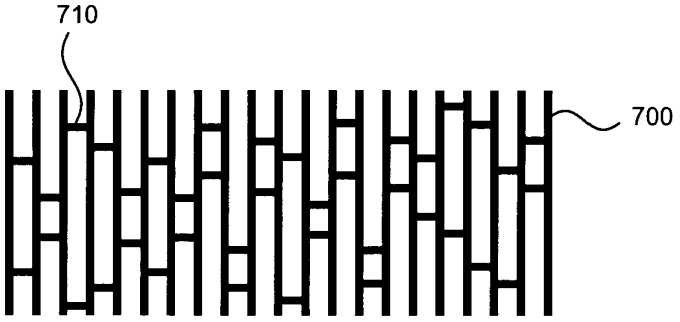

FIG. 7

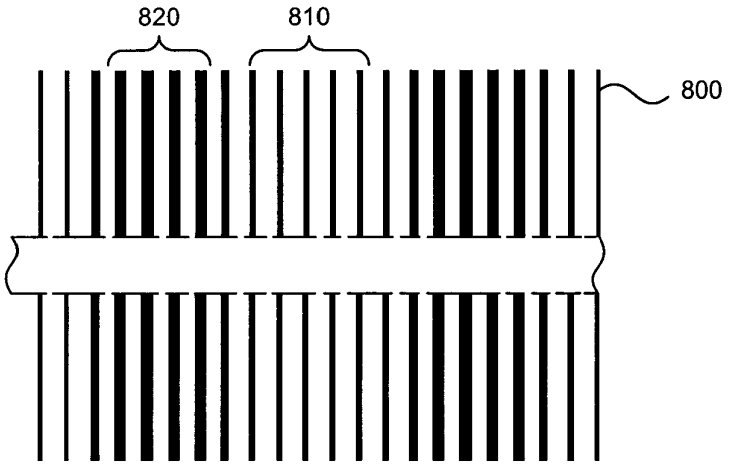

FIG. 8

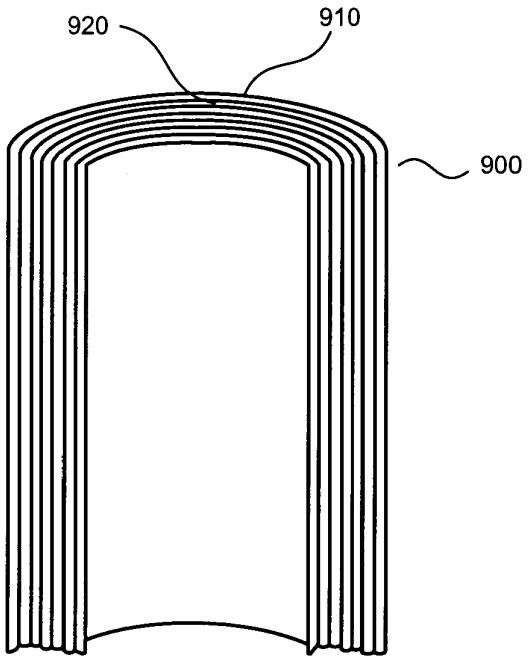

FIG. 9

UNITED STATES PATENT AND TRADEMARK OFFICE

Commissioner for Patents
United States Patent and Trademark Office
P.O. Box 1450
Alexandria, VA 22313-1450
www.uspto.gov
uninquivical

PERKINS COIE LLP
PATENT-SEA
P.O. BOX 1247
SEATTLE, WA 98111-1247

MAILED
MAR 30 2012
OFFICE OF PETITIONS

In re Application of
Roy Edward McAlister
Application No.: 13/027,208
Filed: February 14, 2011
Attorney Docket No.: 695458601US
For: **CHEMICAL PROCESSES AND REACTORS FOR EFFICIENTLY PRODUCING HYDROGEN FUELS AND STRUCTURAL MATERIALS, AND ASSOCIATED SYSTEMS AND METHODS**

: DECISION ON REQUEST TO
: PARTICIPATE IN THE PATENT
: PROSECUTION HIGHWAY
: PROGRAM AND PETITION
: TO MAKE SPECIAL UNDER
: 37 CFR 1.102(a)

This is a decision in response to the request to participate in the PCT Patent Prosecution Highway (PCT-PPH) pilot program and the petition under 37 CFR 1.102(a), filed on 30 January 2012, to make the above-identified application special.

A review of the record discloses that "special status" under the pilot program for applications pertaining to Green Technologies was granted in a decision mailed August 19, 2011.

Since no further benefit can be gain by acceptance of a petition and request to participate in the PPH program, the request and petition are **DISMISSED AS MOOT**.

Inquiries concerning this decision should be directed to the undersigned at 571-272-3204.

All other inquiries concerning the examination or status of the application is accessible in the PAIR system at http://www.uspto.gov/ebc.index.html.

This application is being returned to Technology Center AU 1736 for appropriate action by the examiner.

/SDB/

Sherry D. Brinkley
Petitions Examiner
Office of Petitions

Doc Code: PET.GREEN
Document Description: Petition for Green Tech Pilot

PTO/SB/420 (11-10)
Approved for use through 01/31/2011. OMB 0651-0062
U.S. Patent and Trademark Office; U.S. DEPARTMENT OF COMMERCE
Under the Paperwork Reduction Act of 1995, no persons are required to respond to a collection of information unless it displays a valid OMB control number.

PETITION TO MAKE SPECIAL UNDER THE GREEN TECHNOLOGY PILOT PROGRAM

Attorney Docket Number:	695458701US	Application Number (if known): 13/027,214- Conf. #6393	Filing date: February 14, 2011
First Named Inventor:	Roy E. McAlister, P.E.		
Title:	ARCHITECTURAL CONSTRUCT HAVING FOR EXAMPLE A PLURALITY OF ARCHITECTURAL CRYSTALS		

APPLICANT HEREBY REQUESTS TO PARTICIPATE IN THE GREEN TECHNOLOGY PILOT PROGRAM FOR THE ABOVE-IDENTIFIED APPLICATION. See Instruction Sheet on page 2.

This petition must be timely filed electronically using the USPTO electronic filing system, EFS-Web.

1. By filing this petition:

   Applicant is requesting early publication: Applicant hereby requests early publication under 37 CFR 1.219 and the publication fee set forth in 37 CFR 1.18(d) accompanies this request.

2. By filing this petition: applicant is agreeing to make an election without traverse in a telephonic interview and elect an invention that meets the eligibility requirements for the Green Technology Pilot Program, if the Office determines that the claims are not obviously directed to a single invention. See Instruction Sheet.

3. This request is accompanied by statements of special status for the eligibility requirement.

4. The application contains no more than three (3) independent claims and twenty (20) total claims.

5. The application does not contain any multiple dependent claims.

6. Other attachments: Statement in Support of Petition

Signature		Date	5.9.4
Name (Print/Typed)	Susan D. Betcher	Registration Number	43,498

Note: Signatures of all the inventors or assignees of record of the entire interest or their representative(s) are required in accordance with 37 CFR 1.33 and 11.18. Please see 37 CFR 1.4(d) for the form of the signature. If necessary, submit multiple forms if more than one signature, see below.*

☐ *Total of 1 forms are submitted.

Docket No.: 695458701US
(PATENT)

IN THE UNITED STATES PATENT AND TRADEMARK OFFICE

In re Patent Application of:
Roy E. McAlister, P.E.

Application No.: 13/027,214

Confirmation No.: 6393

Filed: February 14, 2011

Art Unit: 3633

For: ARCHITECTURAL CONSTRUCT HAVING FOR EXAMPLE A PLURALITY OF ARCHITECTURAL CRYSTALS

Examiner: Not Yet Assigned

STATEMENT IN SUPPORT OF PETITION TO MAKE SPECIAL

MS Missing Parts
Commissioner for Patents
P.O. Box 1450
Alexandria, VA 22313-1450

Sir:

This paper is filed in support of the Petition to Make Special under the Green Technology Pilot Program filed concurrently herewith.

Petitioner hereby states that the referenced application is directed to a single invention that materially enhances the quality of the environment, or that materially contributes to: (1) the discovery or development of renewable energy resources; (2) the more efficient utilization and conservation of energy resources; or (3) green house gas emission reduction.

More specifically, the specification and claims are directed to a new architectural construct which provides for the more efficient utilization and conservation of energy resources.

In light of the above, it is requested that the Petition to Make Special under the Green Technology Pilot Program be granted.

Applicant believes no fee is due with this response. However, if a fee is due, please charge our Deposit Account No. 50-0665, under Order No. 695458701US from which the undersigned is authorized to draw.

Dated: 5.9.11

Respectfully submitted,

By _____
Susan D. Betcher
Registration No.: 43,498
PERKINS COIE LLP
P.O. Box 1247
Seattle, Washington 98111-1247
(206) 359-8000
(206) 359-7198 (Fax)
Attorney for Applicant

UNITED STATES PATENT AND TRADEMARK OFFICE

UNITED STATES DEPARTMENT OF COMMERCE
United States Patent and Trademark Office
Address: COMMISSIONER FOR PATENTS
P.O. Box 1450
Alexandria, Virginia 22313-1450
www.uspto.gov

APPLICATION NO.	FILING DATE	FIRST NAMED INVENTOR	ATTORNEY DOCKET NO.	CONFIRMATION NO.
13/027,214	02/14/2011	Roy Edward McAlister	695458701US	6393

25096 7590 05/26/2011
PERKINS COIE LLP
PATENT-SEA
P.O. BOX 1247
SEATTLE, WA 98111-1247

EXAMINER

ART UNIT	PAPER NUMBER
1723	

NOTIFICATION DATE	DELIVERY MODE
05/26/2011	ELECTRONIC

Please find below and/or attached an Office communication concerning this application or proceeding.

The time period for reply, if any, is set in the attached communication.

Notice of the Office communication was sent electronically on above-indicated "Notification Date" to the following e-mail address(es):

patentprocurement@perkinscoie.com

UNITED STATES PATENT AND TRADEMARK OFFICE

Commissioner for Patents
United States Patent and Trademark Office
P.O. Box 1450
Alexandria, VA 22313-1450
www.uspto.gov

5/26/11

PERKINS COIE LLP
PATENT-SEA
P.O. BOX 1247
SEATTLE WA 98111-1247

In re Application of	:	
McAlister	:	DECISION ON PETITION
Application No. 13/027,214	:	TO MAKE SPECIAL UNDER
Filed: 2/14/2011	:	THE GREEN TECHNOLOGY
Attorney Docket No. **695458701US**	:	PILOT PROGRAM

This is a decision on the petition under 37 CFR 1.102, filed 5/9/2011, to make the above-identified application special under the pilot program for applications pertaining to Green Technologies as set forth in 74 Federal Register Notice 64666 (December 8, 2009) and amended by 75 Federal Register Notice 28554 (May 21, 2010) and 75 Federal Register Notice 69049 (November 10, 2010).

The petition is **DISMISSED**.

If reconsideration of this decision is desired, a petition for reconsideration must be filed within ONE (1) MONTH OR THIRTY (30) DAYS from the mail date of this decision, whichever is longer. No extension of this time limit can be granted under 37 CFR 1.136(a) or (b). The petition for reconsideration should include an exhaustive attempt to provide the lacking item(s) noted below, since, after a decision on the petition for reconsideration, no further reconsideration or review of the matter will be undertaken by the Director.

A grantable petition to make an application special under 37 CFR 1.102 and the pilot program as set forth in 74 FR 64666 must be directed to a nonprovisional application filed under 35 USC 111(a) or be a national stage entry under 35 USC 371, exclusive of any reissue applications.

In order to qualify for special status, the following requirements must be met. 1) The application must have no more than 3 independent claims and no more than 20 total claims. 2) The application must not contain any multiple dependent claims. 3) The petition must state the basis for seeking special status, i.e., the claimed invention either: A) materially enhances the quality of the environment or B) materially contributes to: i) the discovery or development of renewable energy resources, ii) the more efficient utilization and conservation of energy resources, or iii) greenhouse gas emission reduction. 4) If the disclosure is not clear on its face that the claimed invention materially contributes under category (A) or (B), the petition must be accompanied by

a statement by the applicant, assignee, or an attorney/agent registered to practice before the Office explaining how the materiality standard is met. 5) A statement that applicant will agree to make an election without traverse in a telephonic interview if a restriction requirement is made by the examiner. 6) The petition to make special must be filed electronically. 7) The petition must be filed at least one day prior to the date that a first Office Action appears in the Patent Application Information Retrieval (PAIR) system. 8) The petition must be accompanied by a request for early publication in compliance with 37 CFR 1.219 and include the publication fee as set forth in 37 CFR 1.18(d).

The requirement for a fee for consideration of the petition to make special for applications pertaining to Green Technologies has been waived.

The petition lacks item(s) 1 and 4.

In regard to item 1, petitioner should note that a review of the application claims has been made for the purposes of determining the number of claims contained therein. This application contains more than 3 independent claims. As set forth in the Notice, if the application contains more than 3 independent claims or more than 20 total claims, it will not be eligible to participate in the "Pilot Program for Green Technologies Including Greenhouse Gas Reduction."

In regard to item 4, petitioner should note that the instant petition includes a statement identifying the basis for the special status (i.e., whether the instant invention (1) materially enhances the quality of the environment or materially contributes to (2) development of renewable energy resources or energy conservation, or (3) greenhouse gas reduction) as required by sections II and III of the notice. However, as stated in the notice, applicant must also provide a statement pertaining to the materiality standard if the application disclosure is not clear on its face as to the materiality of the basis for the special status of the invention. It is not agreed that the application on its face meets that materiality standard.

It is submitted that the claims are directed to a new architectural construct which provides for the more efficient utilization and conservation of energy resources. It is unclear as to how the instantly claimed construct meets the standards as set forth in the notice.

Any reconsideration of this decision should be submitted through the USPTO electronic filing system, EFS-Web, and selecting the document description of "Petition for Green Tech Pilot" on the EFS-Web screen.

Telephone inquiries concerning this decision should be directed to Tom Dunn at 571-272-1171.

The application is being forwarded to the Technology Center Art Unit 1723 for action in its regular turn.

/Tom Dunn/

Tom Dunn
Quality Assurance Specialist
Technology Center 1700

Docket No.: 695458701US
(PATENT)

IN THE UNITED STATES PATENT AND TRADEMARK OFFICE

In re Patent Application of:
Roy E. McAlister, P.E.

Application No.: 13/027,214

Confirmation No.: 6393

Filed: February 14, 2011

Art Unit: 1723

For: ARCHITECTURAL CONSTRUCT HAVING FOR EXAMPLE A PLURALITY OF ARCHITECTURAL CRYSTALS

Examiner: Not Yet Assigned

RENEWED PETITION TO MAKE SPECIAL UNDER THE GREEN TECHNOLOGY PILOT PROGRAM

Commissioner for Patents
P.O. Box 1450
Alexandria, VA 22313-1450

Sir:

This is a renewed petition under 37 CFR 1.102 to make the present application special under the pilot program for applications pertaining to Green Technologies as set forth in 74 Federal Register Notice 64666 (December 8, 2009). This petition was previously filed on May 9, 2011 but was dismissed in the Decision on Petition to Make Special under the Green Technology Pilot Program mailed May 26, 2011.

In the Decision, the examiner alleged that the following requirements were not met in the Petition as filed on May 9, 2011:

1. The application must have no more than 3 independent claims and no more than 20 total claims.

4. If the disclosure is not clear on its face that the claims invention materially contributes under category (A) or (B), the petition must be accompanied by the applicant, assignee, or an attorney/agent registered to practice before the Office explaining how the materiality standard is met.

Regarding requirement 1, petitioner submits herewith a Preliminary amendment reducing the number of claims to be within the required limit.

Regarding requirement 4, petitioner hereby states that the instant invention (1) materially enhances the quality of the environment or materially contributes to (2) development of renewable energy resources or energy conservation, or (2) greenhouse gas reduction. More specifically, the specification and claims are directed to an architectural construct having enhanced thermal properties; electromagnetic, optical and acoustic properties; catalytic properties; capillary properties and sorptive properties.

Petitioner respectfully requests reconsideration and allowance of the present petition. Petitioner believes no fee is due with this response. However, if a fee is due, please charge our Deposit Account No. 50-0665, under Order No. 695458701US from which the undersigned is authorized to draw.

Dated: 6.27.11

Respectfully submitted,

By: _____

Susan D. Betcher
Registration No.: 43,498
PERKINS COIE LLP
P.O. Box 1247
Seattle, Washington 98111-1247
(206) 359-8000
(206) 359-7198 (Fax)
Attorney for Applicant

UNITED STATES PATENT AND TRADEMARK OFFICE

UNITED STATES DEPARTMENT OF COMMERCE
United States Patent and Trademark Office
Address: COMMISSIONER FOR PATENTS
P.O. Box 1450
Alexandria, Virginia 22313-1450
www.uspto.gov

APPLICATION NO.	FILING DATE	FIRST NAMED INVENTOR	ATTORNEY DOCKET NO.	CONFIRMATION NO.
13/027,214	02/14/2011	Roy Edward McAlister	695458701US	6393

25096 7590 08/05/2011
PERKINS COIE LLP
PATENT-SEA
P.O. BOX 1247
SEATTLE, WA 98111-1247

EXAMINER

ART UNIT	PAPER NUMBER
1723	

NOTIFICATION DATE	DELIVERY MODE
08/05/2011	ELECTRONIC

Please find below and/or attached an Office communication concerning this application or proceeding.

The time period for reply, if any, is set in the attached communication.

Notice of the Office communication was sent electronically on above-indicated "Notification Date" to the following e-mail address(es):

patentprocurement@perkinscoie.com

UNITED STATES PATENT AND TRADEMARK OFFICE

Commissioner for Patents
United States Patent and Trademark Office
P.O. Box 1450
Alexandria, VA 22313-1450
www.uspto.gov

8/5/11

PERKINS COIE LLP
PATENT-SEA
P.O. BOX 1247
SEATTLE WA 98111-1247

In re Application of	:	
McAlister	:	DECISION ON PETITION
Application No. 13/027,214	:	TO MAKE SPECIAL UNDER
Filed: 2/14/2011	:	THE GREEN TECHNOLOGY
Attorney Docket No. **695458701US**	:	PILOT PROGRAM

This is a decision on the request for reconsideration, filed 6/27/2011, to make the above-identified application special under the pilot program for applications pertaining to Green Technologies as set forth 74 Federal Register Notice 64666 (December 8, 2009).

The petition is **DENIED**.

A grantable petition to make an application special under 37 CFR 1.102 and the pilot program as set forth in 74 FR 64666 must be directed to a nonprovisional application filed under 35 USC 111(a) or be a national stage entry under 35 USC 371, exclusive of any reissue applications and be filed prior to the date of the notice, December 8, 2009.

In order to qualify for special status, the following requirements must be met. 1) The application must be classified in one of the eligible US classifications listed in section VI of the notice. 2) The application must have no more than 3 independent claims and no more than 20 total claims. 3) The application must not contain any multiple dependent claims. 4) The petition must state the basis for seeking special status, i.e., the claimed invention either: A) materially enhances the quality of the environment or B) materially contributes to: i) the discovery or development of renewable energy resources, ii) the more efficient utilization and conservation of energy resources, or iii) greenhouse gas emission reduction. 5) If the disclosure is not clear on its face that the claimed invention materially contributes under category (A) or (B), the petition must be accompanied by a statement by the applicant, assignee, or an attorney/agent registered to practice before the Office explaining how the materiality standard is met. 6) A statement that applicant will agree to make an election without traverse in a telephonic interview if a restriction requirement is made by the examiner. 7) The petition to make special must be filed electronically. 8) The petition must be filed at least one day prior to the date that a first Office Action appears in the Patent Application Information Retrieval (PAIR) system. 9) The petition

must be accompanied by a request for early publication in compliance with 37 CFR 1.219 and include the publication fee as set forth in 37 CFR 1.18(d).

The requirement for a fee for consideration of the petition to make special for applications pertaining to Green Technologies has been waived.

The petition lacks item(s) 4.

In regard to item 4, petitioner should note that the instant petition includes a statement identifying the basis for the special status (i.e., whether the instant invention (1) materially enhances the quality of the environment or materially contributes to (2) development of renewable energy resources or energy conservation, or (3) greenhouse gas reduction) as required by sections II and III of the notice. However, as stated in the notice, applicant must also provide a statement pertaining to the materiality standard if the application disclosure is not clear on its face as to the materiality of the basis for the special status of the invention. It is not agreed that the application on its face meets that materiality standard. Applicants argue that the instant claims are directed to an architectural construct having enhance thermal properties, electromagnetic, optical and acoustic properties; catalytic properties; capillary properties and sorptive properties. It is noted that the instant claims do not in fact claim these specific properties and there is no requirement in the instant claims that the structure in fact meets the instant criteria for special status. Even if some of these properties were claims, it is not clear as to whether the structure would meet the criteria. For example, just because the structure has optical and acoustic properties, this would not necessarily contribute to 1) materially enhancing the quality of the environment or materially contributing to (2) the development of renewable energy resources or energy conservation, or (3) greenhouse gas reduction as required by sections II and III of the notice.

Any reconsideration of this decision should be submitted through the USPTO electronic filing system, EFS-Web, and selecting the document description of "Petition for Green Tech Pilot" on the EFS-Web screen.

Telephone inquiries concerning this decision should be directed to Tom Dunn at 571-272-1171.

The application is being forwarded to the Technology Center Art Unit 1723 for action in its regular turn.

/Tom Dunn/

Tom Dunn
Quality Assurance Specialist
Technology Center 1700

UNITED STATES PATENT AND TRADEMARK OFFICE

Commissioner for Patents
United States Patent and Trademark Office
P.O. Box 1450
Alexandria, VA 22313-1450
www.uspto.gov

PERKINS COIE LLP
PATENT-SEA
P.O. BOX 1247
SEATTLE WA 98111-1247

MAILED
SEP 20 2011
OFFICE OF PETITIONS

In re Application of	:	
Roy Edward McAlister	:	
Application No. 13/027,214	:	DECISION ON PETITION
Filed: February 14, 2011	:	TO MAKE SPECIAL UNDER
Attorney Docket No. 695458701US	:	37 CFR 1.102(c)(1)
	:	

This is a decision on the petition under 37 CFR 1.102(c)(1), filed September 6, 2011, to make the above-identified application special based on applicant's age as set forth in M.P.E.P. § 708.02, Section IV.

The petition is **GRANTED**.

A grantable petition to make an application special under 37 CFR 1.102(c)(1) and MPEP § 708.02, Section IV: Applicant's Age must be accompanied by evidence showing that at least one of the applicants is 65 years of age, or more, such as a birth certificate or a statement by applicant. No fee is required

The instant petition includes a statement by an attorney on behalf of inventor Roy Edward McAlister attesting to his age. The above-identified application has been accorded "special" status.

Telephone inquiries concerning this decision should be directed to Kimberly Inabinet at 571-272-4618.

All other inquiries concerning either the examination or status of the application should be directed to the Technology Center.

The application is being forwarded to the Technology Center Art Unit 1723 for action on the merits commensurate with this decision.

/Kimberly Inabinet/

Kimberly Inabinet
Petitions Examiner
Office of Petitions

Under the Paperwork Reduction Act of 1995, no persons are required to respond to a collection of information unless it displays a valid OMB control number.

REQUEST FOR PARTICIPATION IN THE PATENT COOPERATION TREATY – PATENT PROSECUTION HIGHWAY (PCT-PPH) PILOT PROGRAM BETWEEN THE KOREAN INTELLECTUAL PROPERTY OFFICE (KIPO) AND THE USPTO

Application No.:	13/027,214-Conf. #6393	Filing Date:	February 14, 2011
First Named Inventor:	Roy E. McAlister, P.E.		
Title of the Invention:	ARCHITECTURAL CONSTRUCT HAVING FOR EXAMPLE A PLURALITY OF ARCHITECTURAL CRYSTALS		

THIS REQUEST FOR PARTICIPATION IN THE PCT-PPH PILOT PROGRAM ALONG WITH THE REQUIRED DOCUMENTS MUST BE SUBMITTED VIA EFS-WEB. INFORMATION REGARDING EFS-WEB IS AVAILABLE AT HTTP://WWW.USPTO.GOV/EBC/EFS_HELP.HTML.

APPLICANT HEREBY REQUESTS PARTICIPATION IN THE PCT-PPH PROGRAM AND PETITIONS TO MAKE THE ABOVE-IDENTIFIED APPLICATION SPECIAL UNDER THE PCT-PPH PROGRAM.

The above-identified application is (1) a national stage entry of the corresponding PCT application, or (2) a national stage entry of another PCT application which claims priority to the corresponding PCT application, or (3) a national application that claims domestic/ foreign priority to the corresponding PCT application, or (4) a national application which forms the basis for the priority claim in the corresponding PCT application, or (5) a continuing application of a U.S. application that satisfies one of (1) to (4) above, or (6) a U.S. application that claims domestic benefit to a U.S. provisional application which forms the basis for the priority claim in the corresponding PCT application.

The corresponding PCT application number(s) is/are: PCT/US11/24806

The international date of the corresponding PCT application(s) is/are: February 14, 2011

I. **List of Required Documents:**

a. **A copy of the latest international work product (WO/ISA, WO/IPEA, or IPER) in the above-identified corresponding PCT application(s).**

[x] Is attached.

[ ] Is not attached because the document is already in the U.S. application.

b. **A copy of all claims which were indicated as having novelty, inventive step and industrial applicability in the above-identified corresponding PCT appliction(s).**

[x] Is attached.

[ ] Is not attached because the document is already in the U.S. application.

c. **English translations of the documents in a. and b. above are attached (if the documents are not in the English language). A statement that the English translation is accurate is attached for the document in b. above.**

Under the Paperwork Reduction Act of 1995, no persons are required to respond to a collection of information unless it displays a valid OMB control number.

REQUEST FOR PARTICIPATION IN THE PCT-PPH PILOT PROGRAM BETWEEN THE KIPO AND THE USPTO
(continued)

Application No.:	13/027,214-Conf. #6393
First Named Inventor:	Roy E. McAlister, P.E.

d. **(1) An information disclosure statement listing the documents cited in the international work products (ISR, WO/ISA, WO/IPEA, IPER) of the corresponding PCT application.**

[x] Is attached.

[ ] Has already been filed in the above-identified U.S. application on _____

(2) Copies of all documents (except) for U.S. patents or U.S. patent application publications)

[x] Are attached.

[ ] Have already been filed in the above-identified U.S. application on _____

II. Claims Correspondence Table:

Claims in US Application	Patentable Claims in the corresponding PCT Application	Explanation regarding the correspondence
1-17	1-17	The claims pending in the US application are identical to their corresponding claims in the PCT Application.

III. All the claims in the US application sufficiently correspond to the patentable claims in the corresponding PCT application.

Signature	/sdb/	Date	1/23/12
Name (Print/Typed)	Susan D. Betcher	Registration Number	43,498

(12) INTERNATIONAL APPLICATION PUBLISHED UNDER THE PATENT COOPERATION TREATY (PCT)

(19) World Intellectual Property Organization
International Bureau

(43) International Publication Date
18 August 2011 (18.08.2011)

PCT

(10) International Publication Number
WO 2011/100726 A2

(51) International Patent Classification:
B32B 7/02 (2006.01) *C01B 35/08* (2006.01)
C01B 31/04 (2006.01) *B32B 9/00* (2006.01)

(21) International Application Number:
PCT/US2011/024806

(22) International Filing Date:
14 February 2011 (14.02.2011)

(25) Filing Language: English

(26) Publication Language: English

(30) Priority Data:
61/304,403 13 February 2010 (13.02.2010) US
12/857,515 16 August 2010 (16.08.2010) US

(72) Inventor; and
(71) Applicant : **MCALISTER, Roy, Edward** [US/US]; 2350 W Shangri La, Phoenix, AZ 85029 (US).

(74) Agents: **BETCHER, Susan, D.** et al.; Perkins Coie LLP, P.O. Box 1247, Seattle, WA 98111-1247 (US).

(81) Designated States *(unless otherwise indicated, for every kind of national protection available)*: AE, AG, AL, AM, AO, AT, AU, AZ, BA, BB, BG, BH, BR, BW, BY, BZ, CA, CH, CL, CN, CO, CR, CU, CZ, DE, DK, DM, DO, DZ, EC, EE, EG, ES, FI, GB, GD, GE, GH, GM, GT, HN, HR, HU, ID, IL, IN, IS, JP, KE, KG, KM, KN, KP, KR, KZ, LA, LC, LK, LR, LS, LT, LU, LY, MA, MD, ME, MG, MK, MN, MW, MX, MY, MZ, NA, NG, NI, NO, NZ, OM, PE, PG, PH, PL, PT, RO, RS, RU, SC, SD, SE, SG, SK, SL, SM, ST, SV, SY, TH, TJ, TM, TN, TR, TT, TZ, UA, UG, US, UZ, VC, VN, ZA, ZM, ZW.

(84) Designated States *(unless otherwise indicated, for every kind of regional protection available)*: ARIPO (BW, GH, GM, KE, LR, LS, MW, MZ, NA, SD, SL, SZ, TZ, UG, ZM, ZW), Eurasian (AM, AZ, BY, KG, KZ, MD, RU, TJ, TM), European (AL, AT, BE, BG, CH, CY, CZ, DE, DK, EE, ES, FI, FR, GB, GR, HR, HU, IE, IS, IT, LT, LU, LV, MC, MK, MT, NL, NO, PL, PT, RO, RS, SE, SI, SK, SM, TR), OAPI (BF, BJ, CF, CG, CI, CM, GA, GN, GQ, GW, ML, MR, NE, SN, TD, TG).

[Continued on next page]

(54) Title: ARCHITECTURAL CONSTRUCT HAVING FOR EXAMPLE A PLURALITY OF ARCHITECTURAL CRYSTALS

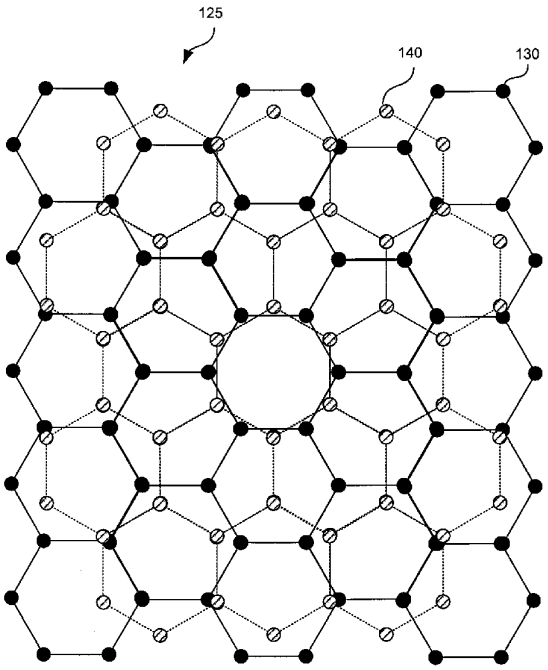

FIG. 1C

(57) Abstract: An architectural construct is a synthetic material that includes a matrix characterization of different crystals. An architectural construct may be comprised of, for example, graphene, graphite, or boron nitride. It may be configured as a solid mass or as parallel layers that may be as thin as a single atom. In large part, its configuration determines how it behaves under a variety of conditions. In implementations in which it is arranged as parallel layers, the architectural construct can be configured to behave in a desirable manner by selecting the layers' thicknesses, their composition, the amount of distance between them, and/or another variable.

WO 2011/100726 A2

Published:

— *without international search report and to be republished upon receipt of that report (Rule 48.2(g))*

ARCHITECTURAL CONSTRUCT HAVING FOR EXAMPLE A PLURALITY OF ARCHITECTURAL CRYSTALS

CROSS-REFERENCE TO RELATED APPLICATION(S)

[0001] The present application claims priority to and the benefit of U.S. Patent Application No. 61/304,403, filed on February 13, 2010 and titled FULL SPECTRUM ENERGY AND RESOURCE INDEPENDENCE. The present application is a continuation in part of: U.S. Patent Application No. 12/857,515, filed on August 16, 2010 and titled APPARATUSES AND METHODS FOR STORING AND/OR FILTERING A SUBSTANCE, which claims priority to and the benefit of U.S. Provisional Application No. 61/304,403, filed February 13, 2010 and titled FULL SPECTRUM ENERGY AND RESOURCE INDEPENDENCE. U.S. Patent Application No. 12/857,515 is also a continuation-in-part of each of the following applications: U.S. Patent Application No. 12/707,651, filed February 17, 2010 and titled ELECTROLYTIC CELL AND METHOD OF USE THEREOF; PCT Application No. PCT/ US10/24497, filed February 17, 2010 and titled ELECTROLYTIC CELL AND METHOD OF USE THEREOF; U.S. Patent Application No. 12/707,653, filed February 17, 2010 and titled APPARATUS AND METHOD FOR CONTROLLING NUCLEATION DURING ELECTROLYSIS; PCT Application No. PCT/ US10/24498, filed February 17, 2010 and titled APPARATUS AND METHOD FOR CONTROLLING NUCLEATION DURING ELECTROLYSIS; U.S. Patent Application No. 12/707,656, filed February 17, 2010 and titled APPARATUS AND METHOD FOR GAS CAPTURE DURING ELECTROLYSIS; and PCT Application No. PCT/ US10/24499, filed February 17, 2010 and titled APPARATUS AND METHOD FOR CONTROLLING NUCLEATION DURING ELECTROLYSIS; each of which claims priority to and the benefit of the following applications: U.S. Provisional Patent Application No. 61/153,253, filed February 17, 2009 and titled FULL SPECTRUM ENERGY; U.S. Provisional Patent Application No. 61/237,476, filed August 27, 2009 and titled ELECTROLYZER AND ENERGY INDEPENDENCE TECHNOLOGIES; U.S. Provisional Application No. 61/304,403, filed

February 13, 2010 and titled FULL SPECTRUM ENERGY AND RESOURCE INDEPENDENCE. Each of these applications is incorporated herein by reference in its entirety. To the extent the foregoing application and/or any other materials incorporated herein by reference conflict with the disclosure presented herein, the disclosure herein controls.

TECHNICAL FIELD

[0002] The present technology relates to a material that includes a matrix characterization of different crystals.

BACKGROUND

[0003] Technology has progressed more during the last 150 years than during any other time in history. Integral to this innovation has been the exploitation of the properties exhibited by both new and existing materials. For example, silicon, being a semiconductor, has been transformed into processors; and steel, having a high tensile strength, has been used to construct the skeletons of skyscrapers. Future innovations will similarly depend on exploiting the useful properties of new and existing materials.

[0004] A material's usefulness depends on its application. A material exhibiting a combination of useful properties is especially useful as it may enable or improve some technology. For example, computer processors rely on multitudes of transistors, each of which outputs a voltage equivalent to a binary 1 or 0 depending on its input. Few materials are suitable as transistors. But semiconductor materials have unique properties that facilitate a transistor's binary logic, making semiconductors especially useful for computer hardware.

[0005] Technology will continue to progress. Engineers and scientists will continue creating novel inventions. Implementing these ideas will depend on materials that can be configured to behave in new and desirable ways.

BRIEF DESCRIPTION OF THE DRAWINGS

[0006] Figure 1A is a diagram showing a molecular structure of a matrix characterization of crystals.

[0007] Figure 1B is a diagram showing a molecular structure of two layers of a matrix characterization of crystals of an architectural construct.

[0008] Figure 1C is another diagram showing a molecular structure of two layers of a matrix characterization of crystals of an architectural construct.

[0009] Figure 2 is an isometric view of an architectural construct configured as a solid mass.

[0010] Figure 3 is a cross-sectional side view of an architectural construct configured as parallel layers.

[0011] Figure 4 is a side view of an architectural construct configured as parallel layers.

[0012] Figure 5 is a cross-sectional side view of an architectural construct configured as parallel layers.

[0013] Figure 6 is a cross-sectional side view of an architectural construct configured as concentric tubular layers.

[0014] Figure 7 is a cross-sectional side view of an architectural construct configured as parallel layers.

[0015] Figure 8 is a side view of a layer of an architectural construct.

[0016] Figure 9 is another side view of a layer of an architectural construct.

[0017] Figure 10 is a side view of an architectural construct configured as parallel layers.

[0018] Figure 11 is another side view of an architectural construct configured as parallel layers.

DETAILED DESCRIPTION

Overview

[0019] Architectural constructs are described herein that are configurable so as to exhibit useful properties. An architectural construct includes a synthetic matrix characterization of crystals. These crystals can be primarily composed of carbon, boron nitride, mica, or another material. The matrix characterization of crystals can be configured as a solid mass, as layers that are as thin as an atom (e.g., graphene), or in other arrangements and variations. In some implementations, an architectural construct includes a matrix characterization of crystals incorporated in a non-crystalline matrix, such as a glass or polymer. In some implementations, an architectural construct includes a matrix characterization of crystals that has been loaded with a substance, such as hydrogen. In some implementations, an architectural construct is configured to have particular mechanical properties. The crystals of an architectural construct have matrix attributes or arrangements. The crystals of an architectural construct are specialized (e.g., arranged in a specific configuration) so that the architectural construct exhibits particular properties. Five sets of properties of an architectural construct are especially exploitable technologically: (i) a construct's thermal properties; (ii) its electromagnetic, optical, and acoustic properties; (iii) its catalytic properties; (iv) its capillary properties; and (v) its sorptive properties.

[0020] An architectural construct can be designed to utilize some or all of these properties for a particular application. As discussed in detail below, an architectural construct's behavior depends on its composition, surface structures located on its layers, its layer orientation, its dopants, and the coatings (including catalysts) that are applied to its surfaces. When it is configured as layers, its behavior also depends on the thicknesses of its layers, spacers between its layers, the distances separating its layers, and the means used for supporting its layers and/or separating its layers. An architectural construct is a macro-structure designed to facilitate micro-processing on a nano-scale. From a macroscopic standpoint, it can be configured to have a specific density, electrical conductivity, magnetic characteristic, specific heat, optical characteristic, modulus of

elasticity, and/or section modulus. And it can be designed so that from a microscopic standpoint it acts as a molecular processor, magnetic domain support, charge processor, and/or bio processor.

[0021] Various embodiments of the invention will now be described. The following description provides specific details for a thorough understanding and an enabling description of these embodiments. One skilled in the art will understand, however, that the invention may be practiced without many of these details. Additionally, some well-known structures or functions may not be shown or described in detail in order to avoid unnecessarily obscuring the relevant description of the various embodiments. The terminology used in the description presented below is intended to be interpreted in its broadest reasonable manner, even though it is being used in conjunction with a detailed description of certain specific embodiments of the invention.

Architectural constructs

[0022] An architectural construct includes a synthetic matrix characterization of crystals. The crystals are composed of carbon, boron nitride, mica, or another suitable substance. The configuration and treatment of these crystals heavily influence the properties that the architectural construct will exhibit, especially when it experiences certain conditions. Many of these properties are described below, and they are discussed in relation to five categories of properties. These categories include the following: (i) thermal properties; (ii) electromagnetic, optical, and acoustic properties; (iii) catalytic properties; (iv) capillary properties; and (v) sorptive properties. Although they are grouped in this way, properties from different sets are sometimes interrelated or associated with one another. Accordingly, an architectural construct can be configured to exhibit some or all of the properties discussed throughout this specification.

[0023] An architectural construct can be configured in many ways. A designer can arrange it as a solid mass (e.g., as multiple single-atom-thick layers stacked upon each other), as multiple layers that are spaced apart and as thin as an atom, or in another configuration through which it will exhibit a desirable property. A designer can also dope the construct or coat its surfaces with a substance or with surface structures, each of

which causes it to behave in a different way than it would have otherwise. For example, surfaces of an architectural construct can be coated with surface structures or coatings composed of carbon, boron, nitrogen, silicon, sulfur, and/or transition metals. These and other variations are detailed further below with reference to various implementations of architectural constructs.

[0024] Figure 1A shows a molecular diagram of a layer of a matrix characterization of crystals 100 according to some implementations. The layer may include carbon, boron nitride, mica, or another suitable material. For example, the matrix characterization of crystals 100 may be a layer of graphene. A layer of a matrix characterization of crystals like that shown in Figure 1A can be configured as an architectural construct by specializing the layer, such as by doping the layer or arranging the layer with other layers in a particular configuration so that the resulting construct exhibits a particular property.

[0025] Layers of a matrix characterization of crystals that form an architectural construct can be configured stacked together as a layer that is thicker than an atom (e.g., graphene stacked to form graphite) and/or spaced apart from each other by particular distances. Furthermore, layers of an architectural construct can be oriented with respect to each other in various ways. Figure 1B shows a diagram of an architectural construct 105 that includes a first layer 110 of a matrix characterization of crystals arranged on a second layer 120 of a matrix characterization of crystals. The first layer 110 is offset and parallel relative to the second layer 120 so that when viewed from above some atoms of the first layer 110 align within the zone between atoms of the second layer. In the example shown, each atom of the first parallel layer is approximately centered within a hexagon formed by atoms of the second layer 120. In some implementations, first and second layers of an architectural construct are configured so that atoms of the first layer and atoms of the second layer vertically align. For example, a structural diagram of an architectural construct including two layers whose atoms vertically align is represented by Figure 1A. Figure 1C shows a molecular diagram of an architectural construct 125 including a first layer 130 and a second layer 140 of a matrix characterization of crystals. The first layer 130 is rotated relative to the second layer by 30 degrees. In some implementations, a first layer of an architectural construct includes a

first substance, such as carbon, and a second layer of the construct includes a second substance, such as boron nitride. Layers composed of or doped with different substances may not appear planar as larger molecules warp or increase the separation of planar surfaces. As further detailed below, some properties of an architectural construct are influenced by the orientation of its layers relative to one another. For example, a designer can rotate or shift a first layer of a construct relative to a second layer of the construct so that the construct exhibits particular optical properties, including a specific optical grating.

[0026] Figure 2 shows an isometric view of an architectural construct 200 that is configured as a solid mass. The architectural construct 200 can include, for example, graphite or boron nitride. An architectural construct configured as a solid mass includes multiple single-atom-thick layers stacked together in various orientations. An architectural construct configured as a solid mass is specialized, meaning it has been altered to behave in a specific way. In some implementations, a solid mass is specialized by doping or by orienting its single-atom-thick layers a particular way with respect to one another.

[0027] An architectural construct can be composed of a single substance (e.g., boron nitride) or it can be specialized by being doped or reacted with other substances. For example, an architectural construct including graphene may have areas that are reacted with boron to form both stoichiometric and non-stoichiometric subsets. The graphene can be further specialized with nitrogen and can include both carbon graphene and boron nitride graphene with a nitrogen interface. In some implementations, compounds are built upon the architectural construct. For example, from a boron nitride interface, a designer can build magnesium-aluminum-boron compounds. In some implementations, the edges of a layer of an architectural construct are reacted with a substance. For example, silicon may be bonded on the edges to form silicon carbide, which forms stronger bonds between the construct and other matter and/or to change the construct's optical characteristics or another property such as specific heat. By specializing an architectural construct in such ways, a designer can create a construct that exhibits different properties than a construct composed of only one type of atoms.

[0028] Architectural constructs including parallel layers spaced apart from one another are capable of yielding a wide range of properties and achieving many outcomes. Figures 3-11 show architectural constructs configured according to some implementations. Figure 3 is a cross-sectional side view of an architectural construct 300 configured as parallel layers. Parallel layers of an architectural construct may be comprised of any of a number of substances, such as graphene, graphite, or boron nitride. Parallel layers may be rectangular, circular, or another shape. In Figure 3, the layers are circular and include a hole through which a support tube 310 supports the architectural construct 300. The layers are each separated by a distance 320, characterizing zones 330 between the layers.

[0029] There are a number of approaches for creating architectural constructs like those shown in Figures 1-11. One is to deposit or machine a single crystal into a desired shape and to heat treat or utilize other methods to exfoliate the single crystal into layers. As an example, the crystal is warm-soaked in a fluid substance, such as hydrogen, until a uniform or non-uniform concentration of the fluid diffuses into the crystal. The crystal may be coated with substances that catalyze this process by helping the fluid enter the crystal. Catalysts may also control the depth to which the fluid diffuses into the crystal, allowing layers that are multiple-atoms thick to be exfoliated from the crystal. Sufficient coatings include the platinum metal group, rare earth metals, palladium-silver alloys, titanium and alloys of iron-titanium, iron-titanium-copper, and iron-titanium-copper-rare earth metals. A thin coating of a catalyst may be applied by vapor deposition, sputtering, or electroplating techniques. The coatings may be removed after each use and reused on another crystal after it has allowed the diffusion of fluid into the crystal. In some implementations, dopants or impurities are introduced into the crystal at a particular depth to encourage the fluid to diffuse to that depth so that layers that are multiple-atoms thick can be exfoliated from the crystal.

[0030] The soaked crystal may be placed in a temporary container or it may be encased in an impermeable pressure vessel. Pressure may be suddenly released from the container or vessel, causing the fluid impregnate to move into areas where the packing is least dense and form gaseous layers. Gas pressure causes the exfoliation such as of

each 0001 plane. Additional separation can be created by repeating this process with successively larger molecules, such as methane, ethane, propane, and butane. The 0001 planes can be separated by a particular distance by controlling the amount and type of fluid that enters the crystal and the temperature at the start of expansion. The layers of the architectural construct can be oriented in a position with respect to one another (i.e., offset and/or rotated as discussed above with respect to Figures 1A-C) by applying trace crystal modifiers, such as neon, argon, or helium, at the time of a layer's deposition, through a heat treatment that moves the structure to a particular orientation, or through torque of the crystal during exfoliation.

[0031] In some implementations, before it is exfoliated, one or more holes may be bored in the crystal so that it accommodates a support structure, like the support tube 310 that supports the architectural construct 300 illustrated in Figure 3. A support structure may be configured within a crystal before it is exfoliated to support the architectural construct as it is created. Or the support structure can be placed in the architectural construct after the crystal has been exfoliated. A support structure may also be used to fix the layers of an architectural construct at a particular distance apart from one another. In some implementations, a support structure may be configured along the edges of an architectural construct's layers (e.g., as a casing for an architectural construct that is comprised of parallel layers).

[0032] Layers of an architectural construct can be made to have any thickness. In Figure 3, each of the parallel layers of the architectural construct 300 is an atom thick. For example, each layer may be a sheet of graphene. In some implementations, the layers of the architectural construct are thicker than one atom. Figure 4 is a side view of an architectural construct 400 configured as parallel layers. In the section shown, the layers of the architectural construct 400 are each thicker than one atom. For example, as discussed above with respect to Figures 1A-C, each layer may include multiple sheets of graphene stacked upon each other. An architectural construct may include parallel layers that are only one atom thick, a few atoms thick, or layers that are much thicker, such as 20 atoms or more.

[0033] In some implementations, all the layers are the same thickness, while in other implementations the layers' thicknesses vary. Figure 5 is a cross-sectional side view of an architectural construct 500 configured as parallel layers that have various thicknesses. As discussed above, layers thicker than an atom or differing from one another in thicknesses may be exfoliated from a single crystal by controlling the depth to which a fluid is diffused into the crystal to exfoliate the layers (e.g., by introducing impurities or dopants at the desired depth).

[0034] When an architectural construct is configured as parallel layers, the layers may be spaced an equal distance apart or by varying distances. Referring again to Figure 3, a distance 320 separates each of the parallel layers characterizing zones 330 between each layer that are approximately equal in size. In Figure 5, the distances between the layers of the architectural construct 500 vary. For example, the distance between the layers of a first set 510 of layers is greater than the distance between the layers of a second set 520 of layers, meaning that the zones between layers of the first set 510 are larger than those of the second set 520.

[0035] There are a number of techniques for arranging one layer a particular distance away from another layer. As mentioned above, one method is to configure the parallel layers on a support structure and exfoliate each layer a certain distance away from an adjacent layer. For example, a manufacturer can control both the volume of fluid and the distance that it is diffused into a single crystal for exfoliating a layer. Another method is to electrically charge or inductively magnetize each exfoliated layer and electrically or magnetically force the layers apart from one another. Diffusion bonding or a suitable adherent can secure the layers in place on the central tube at particular distances away from one another.

[0036] Another technique for establishing a particular distance between the layers is to deposit spacers between the layers. Spacers can be composed of titanium (e.g., to form titanium carbide with a graphene layer), iron (e.g., to form iron carbide with a graphene layer), boron, nitrogen, etc. Referring again to Figure 4, the parallel layers 400 are separated with spacers 410. In some implementations, a gas is dehydrogenated on

the surface of each layer, creating the spacers 410 where each particle or molecule is dehydrogenated. For example, after a layer of an architectural construct is exfoliated, methane may be heated on the surface of the layer, causing the methane molecules to split and deposit carbon atoms on the surface of the layer. The larger the molecule that is dehydrogenated, the larger the potential spacing. For example, propane, which has three carbon atoms per molecule, will create a larger deposit and area or space than methane, which has one carbon atom per molecule. In some implementations, parallel layers are configured on a central tube and the spacers are included between the layers. In some implementations, the spacers are surface structures, like nanotubes and nanoscrolls, which transfer heat and facilitate in the loading or un-loading of substances into an architectural construct. Architectural constructs that include these types of surface structures are described below with respect to Figures 10 and 11.

[0037] Figure 6 shows a cross-sectional side view of an architectural construct 600 configured as concentric tubular layers of a matrix characterization of crystals. For example, a first layer 610 of the architectural construct is tubular and has a diameter greater than a second layer 620 of the architectural construct, and the second layer 620 is configured within the first layer 610. An architectural construct configured as concentric tubes can be formed in many ways. One method is to dehydrogenate a gas, such as a hydrocarbon, within a frame to form the first layer 610 of the architectural construct 600, and to dehydrogenate a substance, such as titanium hydride, to form spacers (e.g., surface structures) on the inside surface of the first layer before dehydrogenating the first gas to form the second layer 620 on the spacers. Subsequent layers can then be deposited in a similar fashion. In some implementations, each tubular layer is formed by dehydrogenating a gas in its own frame. The dehydrogenated layers are then configured within one another in the configuration shown in Figure 6. Spacers can be deposited on either the inside or outside surfaces of the layers to space them apart by a particular distance. In other instances, multiple wraps of a material such as polyvinyl fluoride or chloride are dehydrogenated to produce the desired architectural construct. In other instances, polyvinylidene chloride or fluoride are dehydrogenated to produce the desired architectural construct.

[0038] Figure 7 is a cross-sectional side view of an architectural construct 700 comprised of parallel layers. A first set 710 of layers are spaced apart by a closer distance than a second set 720 of layers. The architectural construct 700 is discussed in further detail below with reference to some of the properties that it exhibits in this configuration. Figure 8 is a side view of a layer 800 of an architectural construct. The layer 800 has a circular shape, and it includes a hole 810, through which a support structure may support the layer 800. Figure 9 is a side view of a layer 900 of an architectural construct that has a rectangular shape with rounded corners. As mentioned above, if a layer is exfoliated from a single crystal, it can be machined into a particular shape either before or after exfoliation. Multiple layers like the layer 900 can be arranged together via, for example, a support structure configured on its edges or spacers configured on their surfaces. In some implementations, a surface of an architectural construct is treated with a substance. For example, a surface of an architectural construct can be coated with at least one of carbon, boron, nitrogen, silicon, sulfur, transition metals, carbides, and borides, which causes the architectural construct to exhibit a particular property. For example, as discussed below, a surface of an architectural construct can be treated so that it includes silicon carbide, which may change its electromagnetic and/or optical properties.

[0039] In some implementations, an architectural construct is configured to be non-sacrificial. For example, as explained below, an architectural construct can be configured to load molecules of a substance into zones between layers of the construct. A non-sacrificial construct can load and unload substances or perform other tasks without sacrificing any of its structure. In other implementations, an architectural construct is configured to sacrifice atoms from its crystalline structure to facilitate a particular result. For example, an architectural construct that is composed of boron nitride may be configured to load nitrogen, which the boron nitride will facilitate reaction with hydrogen to form ammonia and/or other nitrogenous substances. As a result, atoms from the construct will be sacrificed in the reaction with hydrogen, and when the product is unloaded from the construct, the architectural construct will have lost the sacrificed molecules of boron nitride. In some implementations, a construct that has sacrificed its

structure can be restored or cyclically utilized in such reactions. For example, an architectural construct that is composed of boron nitride can be restored by presenting the construct with new nitrogen, boron, or boron nitride molecules and applying heat or another form of energy such as electromagnetic radiation. The new boron nitride structure may self-organize replacement of missing atoms into the original architectural construct.

[0040] An architectural construct can be designed so that it has certain properties such as a specific density, modulus of elasticity, specific heat, electrical resistance, and section modulus. These macroscopic characteristics affect the properties that an architectural construct exhibits. A construct's density is defined as its mass per unit volume. A number of different parameters affect an architectural construct's density. One is the composition of the matrix characterization of crystal. For example, a crystal of boron nitride generally has a higher density than a crystal of graphite depending upon factors such as disclosed regarding Figures 1A, 1B and 1C. Another is the distance separating the layers of an architectural construct. Increasing or decreasing the spacing between the layers will correspondingly increase or reduce an architectural construct's density. An architectural construct's density may also be greater in embodiments in which its layers are spaced apart by denser surface structures relative to embodiments in which the layers are similarly spaced but not by surface structures. An architectural construct's dopants can also change its density as desired.

[0041] An architectural construct's modulus of elasticity is its tendency to be deformed elastically when a force is applied to it (defined as the slope of its stress-strain curve in the elastic deformation region). Like its density, an architectural construct's modulus of elasticity depends in part on the thicknesses of its layers, their spacing, and their composition. Its modulus of elasticity will also depend on how the layers are fixed relative to one another. If the layers are supported by a central tube, like the support tube 310 of the architectural construct 300 shown in Figure 3, the individual layers can generally elastically deform by a greater amount than if they are fixed relative to one another using spacers, like the spacers 410 between the layers of the architectural construct 400 shown in Figure 4. For the most part, when spacers fix two layers relative to one another, each layer will reinforce the other when force is exerted on either, dampening

the deflection that results from a given force. The amount that each layer reinforces each other layer is contingent, in part, on the concentration of spacers between the layers and how rigidly the spacers hold the layers together.

[0042] An architectural construct's section modulus is the ratio of a cross section's second moment of area to the distance of the extreme compressive fiber from the neutral axis. An architectural construct's section modulus will depend on the size and shape of each layer of architectural construct. For example, the section modulus of a rectangular layer of architectural construct is defined by the following equation:

$$S = \frac{bh^2}{6}, \tag{1}$$

where b is the base of the rectangle and h is the height. And the section modulus of a circle with a hole in its center is defined by the following equation:

$$S = \frac{\pi(d_2^4 - d_1^4)}{32d_2}, \tag{2}$$

where d_2 is the diameter of the circle and d_1 is the diameter of the hole in the circle.

[0043] An architectural construct's density, modulus of elasticity, and section modulus can be constant throughout the architectural construct or they can vary by section or cyclically. Just as a construct's density, modulus of elasticity, or section modulus can affect the properties that are exhibited by the construct, varying these macroscopic characteristics either by section or cyclically can cause the architectural construct to behave differently at different parts of the construct. For example, by separating an architectural construct's layers in a first section by a greater amount than in a second section (thereby giving it a greater density in the second section than in the first), the architectural construct can be made to preferentially load a first substance in the first section and a second substance in the second section. In some implementations, an architectural construct is configured having particular mechanical properties. For example, an architectural construct can be configured as a support structure for an object. In some implementations, an architectural construct is configured having at least one of a particular fatigue endurance strength, yield strength, ultimate strength, and/or creep strength. In

some implementations, an architectural construct is configured having a particular property, including these and the others discussed herein, including various anisentropic influences on the property.

I. Thermal Properties

[0044] An architectural construct can be configured to have specific thermal properties. Even when its crystalline layers readily conduct heat, an architectural construct can be configured to have either a high or low availability for conductively transferring heat. Illustratively, conduction perpendicular to the layers may be inhibited by the choice of spacing and spacers. It can also be configured so that radiative heat is transmitted through passageways or elsewhere within the construct, reflected away from the construct, or absorbed by the construct. This section describes various implementations of architectural constructs that are designed to have specific thermal behaviors.

[0045] A one-atom-thick graphene layer is seemingly mostly open space between defining carbon atoms. However, graphene provides extremely high thermal and electrical conductivity in directions within the plane of atoms but only about 2.3% of white light that strikes it is absorbed. Similarly about 2% to 5% of the thermal energy spectrum radiated orthogonally at the place of atoms is absorbed while radiative heat rays parallel to separated architectural construct layers can be transmitted with even less attenuation. The net amount of light that an architectural construct absorbs depends in part on the orientation of successive layers relative to one another. Variations in the orientations of layers of an architectural construct, as discussed above with reference to Figures 1A-C, can enable various new applications. For example, radiative energy can be delivered to sub-surface locations via more absorptive orientations, such as the orientation shown in Figure 1B. As another example, radiation can be polarized via orientations such as that shown in Figure 1C, and this orientation can be further modified by offsetting a layer in the direction of its plane by a certain amount, such as described above with respect to Figures 1A and 1B. For a further discussion of graphene's properties, optical and otherwise, *see* R.R. Nair, P. Blake, A. N. Grigorenko, K. S. Novoselov, T. J. Booth, T.

Stauber, N. M. R. Prees and A. K. Geim, *Fine Structure Constant Defines Visual Transparency of Graphene*, 320 SCIENCE 1308 (2008); A. B. Kuzmenko, E. van Heumen, F. Carbone, and D. van der Marel, *Universal Optical Conductance of Graphite*, DPMC, University of Geneva, 1211 Geneva 4, Switzerland (2008).

[0046] Some crystalline substances, like graphene, graphite, and boron nitride, readily conduct heat in certain directions. In some applications, an architectural construct composed of one of these substances is configured to transfer heat between two locations or away from or to a particular location. In other applications, the architectural construct is configured so that heat may be efficiently transferred into and out of the construct as needed. An architectural construct composed of a substance like graphene can be rapidly heated or cooled. Despite having a much lower density than metal, an architectural construct can conductively transfer a greater amount of heat in desired directions per unit area than solid silver, raw graphite, copper, or aluminum.

[0047] An architectural construct can be arranged to have a high availability for conductively transferring heat by configuring the construct so it has a high concentration of thermally conductive pathways through a given cross section of the construct. An architectural construct can be arranged to have a low availability for conductively transferring heat by configuring the construct so it has a low concentration of thermally conductive pathways through a given cross section of the construct. For example, Figure 7 shows an architectural construct 700 configured as parallel layers that are rectangular and supported by a central support structure 703. A first set 710 of parallel layers are an atom thick and are spaced a first distance away from one another. A second set 720 of layers are an atom thick and are spaced a second distance away from one another that is greater than the first distance. Because there is a higher concentration of thermal passageways over the span of the first set 710 of parallel layers than over the span of the second set 720 of layers (and the sets of layers span approximately the same distance), the first set has a higher availability for conductively transferring heat than the second set. It follows that the second set 720 does a better job than the first set 710 at thermally insulating an object located at a first side 701 of the construct from an object located on a second side 702. In some implementations, an architectural construct

configured as parallel layers is arranged to insulate a surface that the layers are not orthogonal to. For example, the architectural construct can be configured so its layers contact a flat surface at an angle such as 45 degrees by offsetting the edges of consecutive layers by a particular amount so that the layers achieve this angle with the surface when placed against it. In some implementations, an architectural construct is arranged to have a higher availability for conductively transferring heat by configuring it having thicker layers. For example, referring again to Figure 5, there is a higher availability for thermally transferring heat through the second set 520 of layers than through the first set 510 because the second set of layers is thicker than the first and spaced closer together. In some implementations, an architectural construct includes surface structures, such as on the construct 1000 shown in Figure 10, which facilitates the conductive transfer of heat within the construct.

[0048] As discussed below with reference to an architectural construct's electromagnetic and optical properties, an architectural construct can be arranged to transmit, diffract, reflect, refract, or otherwise transform radiant energy. Accordingly, an architectural construct may be configured to interact in a specific way with radiant heat. In some implementations, an architectural construct is configured to transmit radiant heat through passageways within the construct. This transfer of radiant heat can enable endothermic or exothermic reactions at the speed of light. A construct's properties related to radiant heat transfer can be altered by including surface structures on the layers of the construct, which may absorb or reflect specific wavelengths.

[0049] Radiation gratings with various slot widths can be fabricated as spacings between layers or by electron beam lithography (e-beam) and their infrared transmission of the transverse magnetic mode (TM mode) provides for Fourier Transform Infrared Spectroscopy (FTIR). This provides the basis of systems that serve as infrared photodetectors, bio-chip sensors, and light-emitting diode polarizers. United States Patent Application No. 12/064,341, filed on August 4, 2008 and titled "INFRARED COMMUNICATION APPARATUS AND INFRARED COMMUNICATION METHOD," the teachings of which are incorporated herein by reference, describes some exemplary systems.

[0050] Referring again to Figure 7, the second set 720 of layers may be spaced apart a particular distance, be composed of a particular substance, and be configured a particular thickness so that incident infrared energy that is parallel to the layers enters and is transmitted through zones between the layers. For example, to transmit radiant energy of a particular frequency, an architectural construct can be comprised of layers of boron nitride that are spaced apart according to quantum mechanics relationships. Similarly, as previously noted, an architectural construct can also be configured to specifically absorb radiant energy. For example, the layers of the first set 710 of layers may be spaced apart a particular distance, be composed of a particular substance, and be a particular thickness so that at least a portion of incident infrared energy is absorbed by the layers. Opacity of each individual layer or of a suspended layer is 2.3% of the orthogonal radiation as established by quantum electrodynamics. Opacity of a group of layers depends upon their spacings, orientations of the architectural construct's layers, and the interactions of relativistic electrons within the layers and the selection of spacers, such as the surface structures.

[0051] An architectural construct can also be arranged to insulate an object from radiative energy, including radiant heat. In some implementations, an architectural construct insulates an object from radiant heat by reflecting the radiant energy or by transmitting the radiant energy through passageways around or away from the object. For example, referring to Figure 4, an architectural construct can be configured to insulate an object placed on the right side of the architectural construct 400 from a radiation source on the left side of the construct.

[0052] An architectural construct's thermal properties can also be changed by adding a coating to surfaces of the construct or by doping the construct. For example, referring again to Figure 4, the architectural construct 400 can be doped as it is self-organized or by diffusion or ion implantation to increase its thermal conductivity generally or in specific areas or directions. It can be coated with metals, such as aluminum, silver, gold, or copper, to reflect more radiant heat than it would have otherwise.

II. Acoustic, Electromagnetic, and Optical Properties

[0053] Architectural constructs can be made to exhibit specific properties in response to radiant or acoustic energy. They can be configured to acoustically and/or electromagnetically resonate at specific frequencies. They can also be constructed to have a particular index of refraction, and they can be designed to shift the frequency of incident electromagnetic waves. These properties can be controlled by arranging a construct to have a particular configuration, including a specific density, modulus of elasticity, and section modulus. As discussed above, these parameters can be adjusted by changing the composition of an architectural construct, its treatment, and its design.

[0054] An architectural construct's acoustic resonance frequency changes with a number of factors. A dense architectural construct will resonate at a lower frequency than one that is less dense and otherwise identical. Accordingly, when an architectural construct is configured as parallel layers, a thin layer will have a higher resonant frequency than a thicker layer. An architectural construct supported firmly on its edges will resonate at a lower frequency than one that is supported at its center. Additionally, an architectural construct with a high modulus of elasticity will resonate at a greater frequency than one with a low modulus of elasticity, and an architectural construct with a high section modulus will resonate at a lower frequency than an architectural construct with a smaller section modulus. For example, referring again to Figure 5, the second set 520 of layers has an acoustic resonance frequency that is lower than that of the first set 510 of layers. This is because the layers of the second set are thicker than those of the first set and they are spaced a shorter distance apart from one another, but they are otherwise identical. The resonance frequency of any of the layers of the second set 520 or the first set 510 can be reduced by making the diameter of the layers larger. In some implementations, all the layers of an architectural construct are designed to resonate at the same frequency. An architectural construct's resonant frequency will also depend on its composition. Additionally, in some implementations, dopants and/or coatings are added to an architectural construct to increase or reduce its acoustic resonance frequency. An architectural construct's resonance frequency can also be reduced by adding spacers, including surface structures, between the layers.

[0055] An architectural construct can also be configured to resonate electromagnetically at a particular frequency. For example, its density, modulus of elasticity, and section modulus can be chosen for each layer so that the construct or each layer has a particular resonance frequency. For example, referring again to Figure 5, the second set 520 of layers may have a lower electromagnetic resonant frequency than the first set 510 of layers because the second set has thicker layers than the first set and they are configured closer together than the layers of the first set. In some implementations, an architectural construct is doped, and its electromagnetic resonance frequency increases or decreases as a result of the doping.

[0056] An architectural construct may also be configured to absorb radiant energy that is a particular wavelength. A number of factors influence whether an architectural construct will absorb radiant energy that is a particular wavelength. For example, referring to Figure 4, the ability of the architectural construct 400 to absorb radiant energy that is a particular wavelength depends on the layers' thicknesses, their spacing, their composition, their dopants, their spacers (including surface structures), and their coatings. In some implementations, an architectural construct is configured to transmit radiant energy that is a first wavelength and absorb and re-radiate energy that is a different wavelength from the received radiant energy. For example, referring again to Figure 4, the architectural construct 400 may be configured so that the layers are parallel to some but not all incident radiant energy. The parallel layers can be configured to transmit radiant energy that is parallel to the layers through the construct and absorb non-parallel radiation. In some implementations, a re-radiative substance (e.g., silicon carbide, silicon boride, carbon boride, etc.) is coated on the surfaces of the architectural construct, such as by chemical vapor deposition, sputtering, or otherwise spraying the architectural construct with the substance. Then, when non-parallel radiation contacts the architectural construct, the re-radiative substance absorbs the non-parallel radiation and re-radiates the energy at a different wavelength than the energy was received at. For example, silicon carbide can be applied to an architectural construct by making silicon available to form solid solutions and stoichiometric compounds.

[0057] As mentioned in the previous example and discussed above with respect to radiant heat, an architectural construct can be configured to transmit radiant energy through radiant passageways in the construct (e.g., through zones between layers). As mentioned above, thermal radiation can be transferred at the speed of light in the areas between the layers. For example, the distance separating the layers of the architectural construct 300 shown in Figure 3 creates zones 330 between the layers through which radiant energy can be transferred. In some implementations, the sizes of the zones between the layers can be increased allowing more radiant energy to be transmitted. In some implementations, the layers of an architectural construct are spaced apart to polarize incident electromagnetic waves. Also, as discussed above, an architectural construct can be configured to insulate an object from radiation. In some implementations, an architectural construct insulates an object from radiation by reflecting the radiant energy. For example, referring to Figure 4, the architectural construct 400 can be configured to insulate an object placed on the right side of the architectural construct 400 from radiation on the left side of the construct. For example, each layer can be composed of boron nitride, and be spaced apart to reflect electromagnetic radiation within specified wavelengths.

[0058] An architectural construct can also be configured to have a particular index of refraction (i.e., an index of refraction within a particular range or an exact value). An architectural construct's index of refraction is a function of, among other variables, the composition of the layers (e.g., boron nitride, graphite, etc.), the thicknesses of the layers, dopants, spacers (including surface structures), and the distances that separate the layers. Referring to Figure 4, the distance 440 between the parallel layers 400, and the thicknesses of the layers, may be selected so that the parallel layers 400 have a particular index of refraction. For example, the layers can be comprised of graphite to have an index of refraction that is adjusted by the spacing between layers and/or by the addition of adsorbed and/or absorbed substances within the spacings. Additionally, in some implementations, dopants are added to an architectural construct to change its index of refraction. For example, layers of an architectural construct comprised of boron nitride

may be doped with nitrogen, silicon or carbon to increase or decrease its index of refraction.

[0059] An architectural construct's index of refraction may change when a substance is loaded into the architectural construct. For example, an architectural construct existing in a vacuum may have a different index of refraction than when hydrogen is loaded into the construct and expressed as epitaxial layers and/or as capillaries between the epitaxial layers. In some implementations, the index of refraction of a first portion of an architectural construct is different from the index of refraction of a second portion of the architectural construct. For example, referring to Figure 5, the first set 510 of layers may have a different index of refraction than the second set 520 of layers because the first set of layers is thinner and is spaced apart by a greater distance than the layers in the second set of layers.

[0060] An architectural construct can be configured to have a particular diffraction grating by orienting its layers relative to one another in a particular way. As a result, incident electromagnetic waves will diffract through layers of the architectural construct in a predictable pattern. In some implementations, by passing light through layers of an architectural construct and observing how the light is diffracted and refracted (e.g., by observing the diffraction pattern that is produced, if it exists, and the angle that the light is refracted at), it can be determined what unknown substance is loaded between the layers. For example, an architectural construct may be configured so that atoms from a first layer are aligned with atoms from a second layer when viewed from a position perpendicular to the construct, like in Figure 1A, producing a predictable diffraction pattern when light is passed through the construct. As discussed above with reference to Figures 1A-C, layers of a construct (either spaced apart or stacked atop one another) may be oriented in different ways by offsetting or rotating one layer relative to the other.

III. Catalytic Properties

[0061] An architectural construct can be configured to catalyze a reaction in a variety of ways. For example, an architectural construct comprised of parallel layers, like those of Figures 3-5, may catalyze a chemical reaction or a biological reaction at an edge of its

layers by controlling the temperature of the reaction, by having a particular configuration that catalyzes the reaction, or by supplying a substance that catalyzes the reaction. An architectural construct can catalyze a reaction by speeding the reaction up, prolonging the presentation of reactants to promote a reaction, enabling the reaction by heat addition or removal, or by otherwise facilitating the reaction.

[0062] A number of variables can be changed to catalyze a particular reaction. In some implementations, the thicknesses of the layers of an architectural construct are selected so that a reaction is catalyzed. In some implementations, the distances between layers and/or the layers' compositions (e.g., boron nitride, carbon, etc.) are selected so that a reaction is catalyzed. In some implementations, dopants are added to an architectural construct or spacers (including surface structures) of a particular chemistry are added between layers so that a particular reaction is catalyzed.

[0063] In some implementations, the parallel layers catalyze a reaction by transferring heat to a zone where a reaction is to occur. In other implementations, the parallel layers catalyze a reaction by transferring heat away from a zone where a reaction is to occur. For example, referring again to Figure 3, heat may be conductively transferred into the parallel layers 300 to supply heat to an endothermic reaction within the support tube 310. In some implementations, the parallel layers catalyze a reaction by removing a product of the reaction from the zone where the reaction is to occur. For example, referring again to Figure 3, the parallel layers 300 may absorb alcohol from a biochemical reaction within the support tube 310 in which alcohol is a byproduct, expelling the alcohol on outer edges of the parallel layers, and prolonging the life of a microbe involved in the biochemical reaction.

[0064] In some implementations, a first set of parallel layers is configured to catalyze a reaction and a second set of parallel layers is configured to absorb and/or adsorb a product of the reaction. For example, referring again to Figure 5, the second set 520 of layers may be configured to catalyze a chemical reaction by enabling the reaction between two molecules and the first set 510 of layers may be configured to adsorb a product of the reaction, thus prolonging the length of the chemical reaction.

[0065] A reaction can be catalyzed in other ways as well. In some implementations, an architectural construct is electrically charged to catalyze a reaction proximate the construct. In some implementations, an architectural construct is configured to resonate acoustically at a particular frequency, causing molecules to orient themselves in a way that catalyzes a reaction. For example, the molecules may be oriented to enable a chemical reaction or their adsorption onto the layers. In some implementations, an architectural construct is configured to transmit or absorb radiant energy to catalyze a reaction. For example, referring to Figure 5, the second set 520 of layers may be configured to absorb radiant energy and transform the radiant energy into heat that the first set 510 of layers uses to facilitate an endothermic reaction. Similarly, surface structures may be configured to absorb radiant energy to heat the construct and facilitate a reaction.

[0066] In some implementations, a catalyst is added to an architectural construct to catalyze a reaction proximate to the construct. The catalyst may be applied on the edges of layers of the construct or on the surfaces of the construct. For example, chromia may be applied on the edges of an architectural construct, and the chromia may catalyze a chemical reaction between methane and ozone produced from air using ionized ultraviolet radiation or an induced spark.

IV. Capillary Properties

[0067] An architectural construct configured as parallel layers may be arranged so that liquid moves between its layers via a capillary action. Any of a number of variables can be changed so that the parallel layers can perform a capillary action with respect to a particular substance. In some implementations, the layers' composition, surface structures, dopants, and/or thicknesses are selected so that an architectural construct performs a capillary action with respect to a particular substance. In some implementations, the distances between the layers are selected so that the architectural construct performs a capillary action with respect to a particular substance. For example, referring to Figure 6, each concentric layer of the architectural construct 600 may be spaced a capillary distance apart from one another for water, and the architectural construct can force or otherwise deliver water up the construct via capillary action.

[0068] An architectural construct may be comprised of some layers that are a capillary distance for a first molecule and some layers that are a capillary distance for a second molecule. For example, referring to Figure 5, the first set 510 of layers may be a capillary distance with respect to a first molecule, such as propane, and the second set 520 of layers may perform a capillary action with respect to a second molecule, such as hydrogen. In this example, hydrogen is adsorbed to the adjacent graphene layers and additional hydrogen may be absorbed between the boundary layers of hydrogen as provided for specific outcomes by the architectural construct design. Additionally, in some implementations, an architectural construct is configured so that heat can be transferred into or out of the construct to facilitate capillary action or a charge can be applied to the layers of an architectural construct to facilitate the capillary action.

V. Sorptive Properties

[0069] An architectural construct that is arranged in parallel layers may be configured to load a substance into zones between the layers. A molecule of a substance is loaded between parallel layers when it is adsorbed onto the surface of a layer or absorbed into the zones between the layers. For example, referring back to Figure 3, the architectural construct 300 may load molecules of a substance presented at an inside edge 340 of the layers into the zones 330 between the layers. The support tube 310 may supply the substance through perforations 350.

[0070] A number of factors affect whether an architectural construct will load molecules of a substance. In some implementations, the architectural construct is configured to transfer heat away from the zones where a molecule is loaded from. When an architectural construct is cooled, it may load molecules faster or it may load molecules that it was unable to load when it was hotter. Similarly, an architectural construct may be unloaded by transferring heat to the construct. In some implementations, an architectural construct is configured to load molecules at a faster rate or at a higher density when an electric charge is applied to the construct. For example, graphene, graphite, and boron nitride are electrically conductive. An architectural construct composed of these materials may be configured to load molecules at a higher rate when an electric charge is applied to

its layers. Additionally, as mentioned above, in some implementations, an architectural construct can be configured to acoustically resonate at a particular resonant frequency. An architectural construct may be configured to resonate at a specific frequency so that particular molecules proximate to the construct are oriented favorably so that they can be loaded into the zones between the layers.

[0071] In some implementations, an architectural construct is configured to load or unload a substance when radiant energy is directed at the construct. For example, referring to Figure 3, the distance 320 between each of the parallel layers 300 may be selected so that the architectural construct absorbs infrared waves, causing the layers to heat up and unload molecules of a substance that it has loaded. As discussed above, in some implementations, a catalyst can be applied to the outside edges of the layers to facilitate the loading of substances into the zones between the layers.

[0072] In some implementations, an architectural construct is configured to selectively load a particular molecule or molecules (e.g., by loading a first molecule and refraining from loading a second molecule). For example, referring again to Figure 5, the first set 510 of layers may be configured so that they are a particular distance apart that facilitates the selective loading of a first molecule and not a second molecule. Similarly, the second set 520 of layers may be configured so that they are a particular distance apart to facilitate the loading of a third molecule but not the second molecule. Surface tension at edges of the layers will also affect whether a molecule is loaded into an architectural construct. For example, if the first set 510 of layers has already loaded molecules of a first substance, surface tension at the inside edges of the first set 510 of layers where molecules of the substance are loaded from may prevent the first set 510 of layers from loading molecules of the second substance but allow the first set 510 of layers to continue to load molecules of the first substance.

[0073] In some implementations, an architectural construct includes surface structures configured on its surfaces that facilitate in the loading and unloading of substances into and out of the construct. Surface structures can be epitaxially oriented by the lattice structure of a layer to which they are applied. In some embodiments, they are

formed by dehydrogenating a gas on the surface of the layers. In other embodiments, they are coated on a layer before adjacent layers are configured on the construct. Figure 10 shows an architectural construct 1000 that includes parallel layers that have surface structures 1010 configured thereon. The surface structures 1010 include nano-tubes, nano-scrolls, rods, and other structures.

[0074] Surface structures can enable an architectural construct to load more of a substance or load a substance at a faster rate. For example, a nano-flower structure can absorb molecules of a substance into an area within the structure and adsorb molecules of the substance on its surface. In some embodiments, the surface structures enable the architectural construct to load a particular compound of a substance. In some embodiments, the surface structures enable the architectural construct to load and/or unload molecules of a substance more rapidly. In some embodiments, a particular type of surface structure is preferred over another surface structure. For example, in some embodiments, a nano-scroll may be preferred over a nano-tube. The nano-scroll may be able to load and unload molecules of a substance more quickly than a nano-tube can because the nano-scroll can load and unload layers of multiple molecules of a substance at the same time while a nano-tube can only load or unload through a small area at the tube ends along the axis. In some embodiments, a first type of surface structure loads a first compound and a second type of surface structure loads a second compound. In some embodiments, surface structures are composed of material that is electrically conductive and/or has a high availability for thermal transfer. In some embodiments, surface structures are composed of at least one of carbon, boron, nitrogen, silicon, sulfur, transition metals, mica (e.g., grown to a particular size), and various carbides or borides.

[0075] As is shown in Figure 10, in some embodiments, surface structures are oriented perpendicular to the surfaces of the architectural construct. In other embodiments, at least some of the surface structures are not oriented perpendicular to the surface that they are applied on. In Figure 11, surface structures 1110 are oriented at different angles from the surfaces of an architectural construct 1100 than 90-degrees. A surface structure may be oriented at a particular angle to increase the surface area of the surface structure, to increase the rate that molecules are loaded by the surface structure,

to increase a loading density of the surface structure, to preferentially load a molecule of a particular compound, or for another reason. Surface structures can be configured, including inclination at a particular angle, by grinding, lapping, laser planning, and various other shaping techniques.

[0076] In some implementations, surface structures are configured on an architectural construct and are composed of a different material than the construct. In Figure 10, for example, the layers of the architectural construct 1000 may be composed of graphene and the surface structures 1010 may be composed of boron nitride. The surface structures can be composed of other materials, such as boron hydride, diborane (B_2H_6), sodium aluminum hydride, MgH_2, LiH, titanium hydride, and/or another metal hydride or metallic catalyst, non-metal or a compound.

Further Implementations

[0077] An architectural construct can be designed at a macro level to utilize one or more of the properties discussed above to facilitate micro-processing on a nano-scale. Among the applications for which architectural constructs are useful include as a charge processor, a molecular processor, and a bio processor.

[0078] An architectural construct configured as a charge processor can be used to build microcircuits, detect the presence of a particular atom or molecule in an environment, or achieve another result. In some implementations, an architectural construct configured as a charge processor forms an electrical circuit. For example, parallel layers of graphene, like those shown in Figure 4, can be spaced apart by dielectric materials so that the architectural construct stores an electric charge and functions like a capacitor. In some implementations, an architectural construct, like the architectural construct 400 shown in Figure 4, is configured as a high-temperature capacitor by isolating parallel layers of the construct with a ceramic. In some implementations, an architectural construct, like the architectural construct 400 shown in Figure 4, is configured as a low-temperature capacitor by isolating parallel layers with a polymer. In some implementations, an architectural construct is configured for processing ions. For example, the architectural construct 400 can be configured with a semi-permeable

membrane covering the zones between the layers of the construct. The semi-permeable membrane allows particular ions to penetrate the membrane and enter the architectural construct where they are detected for a particular purpose. In some implementations, an architectural construct is configured as a solid-state transformer.

[0079] An architectural construct can also be configured as a molecular processor. As discussed above, in some implementations, material from the architectural construct participates in a chemical reaction. Additionally, in some implementations, an architectural construct can transform electromagnetic waves at a molecular level. For example, an architectural construct can be configured to transform in input such as 100 BTU of white light into an output such as 75 BTU of red and blue light. The white light is wave-shifted by chemically resonating the white light to transform it into the blue and red light. For example, the architectural construct 400 shown in Figure 4 can be composed of carbon with selected zones converted to a solid solution or compound such as a carbide with reactants such as boron, titanium, iron, chromium, molybdenum, tungsten, and/or silicon, and the construct can be configured so that the layers are oriented to shift white light into desired wavelengths such as red and/or blue light and/or infrared frequencies.

[0080] An architectural construct configured as a bio processor may be used to create enzymes, carbohydrates, lipids, or other substances. In some implementations, an architectural construct is configured as parallel layers and it removes a product of a biochemical reaction from a reaction zone so that the biochemical reaction can continue. For example, the architectural construct 300 shown in Figure 3 may be configured to load a toxic substance, like alcohol, from a reaction zone within the support tube 310. By removing the toxic substance, a microbe involved in the biochemical reaction will not be killed and the biochemical reaction can continue unabated. In other implementations, an architectural construct can be configured to remove and/or protect and/or orient and present a useful product such as hydrogenase of a biochemical process or reaction from a reaction site without having to interrupt the reaction. In another example, the support tube 310 within the architectural construct 300 shown in Figure 3 may house a biochemical reaction that produces a useful lipid, which is loaded into the zones 330

between the layers of the construct and unloaded on the outside edges of the zones. Therefore, the biochemical reaction can continue while the useful product is removed.

[0081] From the foregoing, it will be appreciated that specific embodiments of the invention have been described herein for purposes of illustration, but that various modifications may be made without deviating from the spirit and scope of the invention. Accordingly, the invention is not limited except as by the appended claims.

[0082] To the extent not previously incorporated herein by reference, the present application incorporates by reference in their entirety the subject matter of each of the following materials: U.S. Patent Application No. 08/921,134, filed on August 29, 1997 and titled COMPACT FLUID STORAGE SYSTEM; U.S. Patent Application No. 09/370,431, filed on August 9, 1999 and titled COMPACT FLUID STORAGE SYSTEM; and U.S. Patent Application No. 12/857,461, filed on August 16, 2010 and titled INTERNALLY REINFORCED STRUCTURAL COMPOSITES AND ASSOCIATED METHODS OF MANUFACTURING.

CLAIMS

I claim:

1. An architectural construct configured to have an acoustic resonant frequency, the architectural construct comprising:

a first layer comprised of a matrix characterization of crystals and having a first thickness; and

a second layer comprised of a matrix characterization of crystals and having a second thickness, wherein:

the first and second layers are arranged so that they are parallel to each other,

the first and second layers are separated by a distance, and a zone exists between the first and second layers,

the first layer is configured to acoustically resonate at a first resonant frequency, and

the second layer is configured to acoustically resonate at a second resonant frequency.

2. The architectural construct of claim 1, wherein the distance between the first and second layers and the first and second thicknesses is selected such that the architectural construct acoustically resonates at a predetermined resonant frequency.

3. The architectural construct of claim 1, wherein the first and second layers are separated by spacers.

4. The architectural construct of claim 1, wherein the first and second layers are configured on a support structure.

5. The architectural construct of claim 1, wherein the first thickness is equal to the second thickness and the first resonant frequency is equal to the second resonant frequency.

6. The architectural construct of claim 1, further comprising a dopant in at least one of the first and second layers.

7. The architectural construct of claim 1, wherein the first and second layers are primarily comprised of boron nitride or carbon.

8. An architectural construct configured to have a predetermined index of refraction, the architectural construct comprising:

a first layer comprised of a matrix characterization of a crystal and having a first thickness; and

a second layer comprised of a matrix characterization of a crystal and having a second thickness, wherein:

the first and second layers are arranged so that they are parallel to each other,

the first and second layers are separated by a distance, and a zone exists between the first and second layers, and

the architectural construct is configured to have a predetermined index of refraction.

9. The architectural construct of claim 8, further comprising a dopant in at least one of the first and second layers, wherein the distance between the first and second layers and the first and second thicknesses is selected such that the architectural construct has the predetermined index of refraction.

10. The architectural construct of claim 9, wherein the first and second layers are primarily comprised of carbon or boron nitride.

11. The architectural construct of claim 8, further comprising:

a third layer comprising a matrix characterization of a crystal and having a third thickness; and

a fourth layer comprising a matrix characterization of a crystal and having a fourth thickness, wherein:

the third and fourth layers are arranged so that they are parallel to the first and second layers,

the third and the fourth layers are separated by a second distance, and

the architectural construct has a different index of refraction through the first and second layers than it does through the third and fourth layers.

12. An architectural construct configured to transmit radiant energy, the architectural construct comprising:

a first layer comprised of a matrix characterization of a crystal and having a first thickness; and

a second layer comprised of a matrix characterization of a crystal and having a second thickness, wherein:

the first and second layers are arranged so that they are parallel to each other,

the first and second layers are separated by a distance, and a zone exists between the first and second layers, and

the first and second layers are configured to transmit radiant energy of a particular wavelength through the zone between the layers.

13. The architectural construct of claim 12, wherein the distance between the first and second layers and the first and second thicknesses is selected such that the architectural construct transmits radiant energy of the particular wavelength through the zone between the layers.

14. The architectural construct of claim 12, wherein the first and second layers are separated by spacers.

15. The architectural construct of claim 12, wherein the first and second layers are configured on a support structure.

16. The architectural construct of claim 12, further comprising a dopant in at least one of the first and second layers.

17. The architectural construct of claim 12, wherein the first and second layers are primarily comprised of boron nitride or carbon.

18. An architectural construct configured to have an electromagnetic resonant frequency, the architectural construct comprising:

a first layer comprised of a matrix characterization of a crystal and having a first thickness; and

a second layer comprised of a matrix characterization of a crystal and having a second thickness, wherein:

the first and second layers are arranged so that they are parallel to each other,

the first and second layers are separated by a distance, and a zone exists between the first and second layers,

the first layer is configured to electromagnetically resonate at a first resonant frequency, and

the second layer is configured to electromagnetically resonate at a second resonant frequency.

19. The architectural construct of claim 18, wherein the distance between the first and second layers and the first and second thicknesses is selected such that the

architectural construct electromagnetically resonates at a predetermined resonant frequency.

20. The architectural construct of claim 18, wherein the first and second layers are separated by spacers.

21. The architectural construct of claim 18, wherein the first and second layers are configured on a support structure.

22. The architectural construct of claim 18, wherein the first thickness is equal to the second thickness and the first resonant frequency is equal to the second resonant frequency.

23. The architectural construct of claim 18, further comprising a dopant in at least one of the first and second layers.

24. The architectural construct of claim 18, wherein the first and second layers are primarily comprised of boron nitride or carbon.

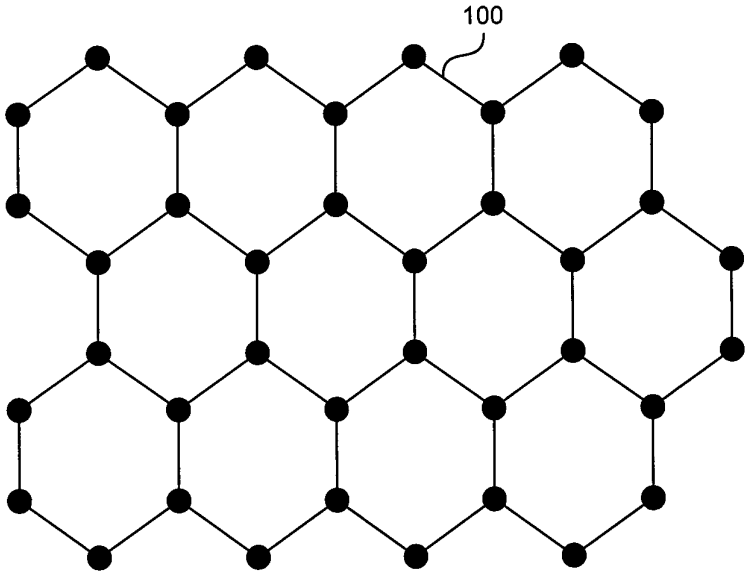

FIG. 1A

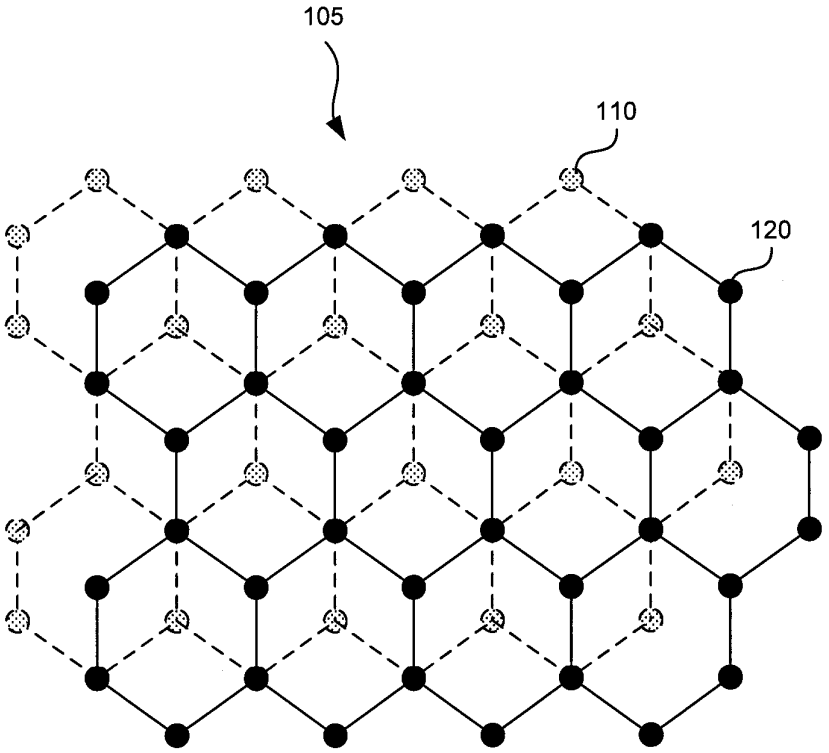

FIG. 1B

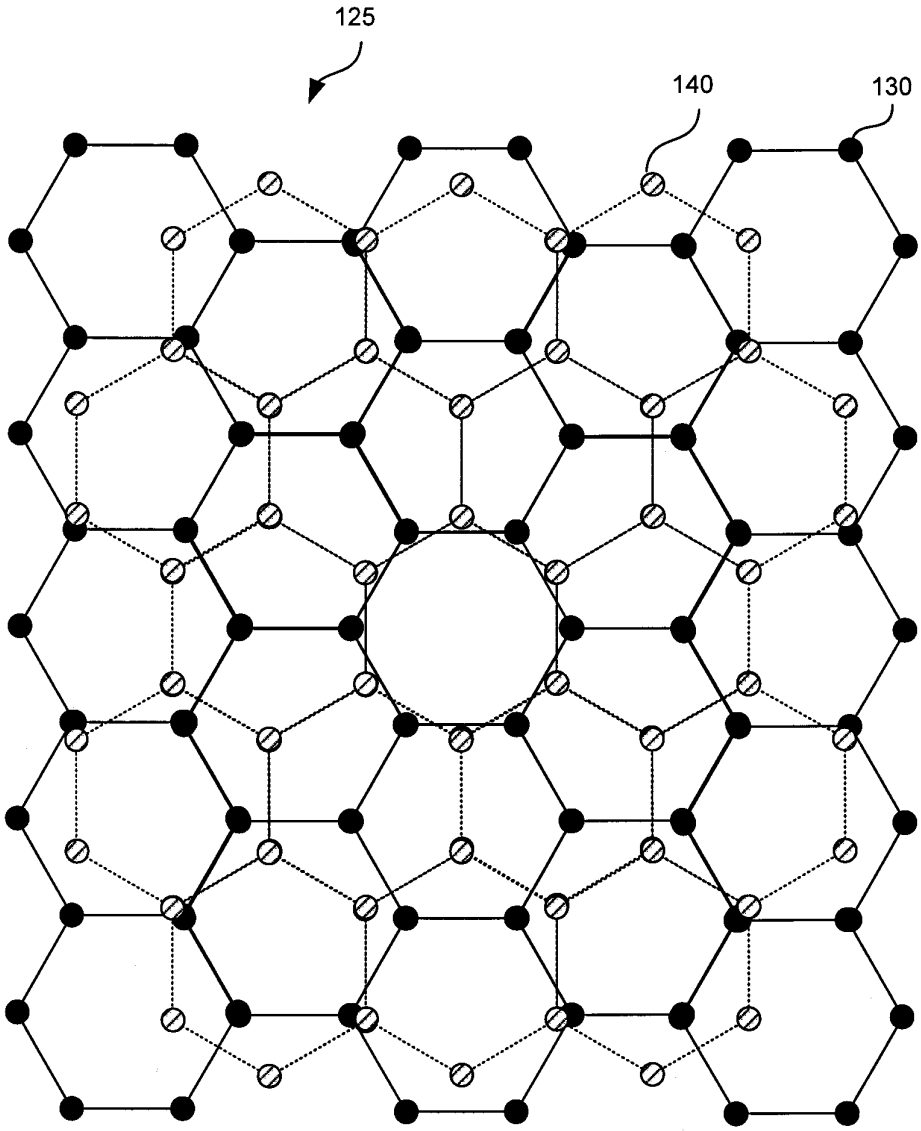

FIG. 1C

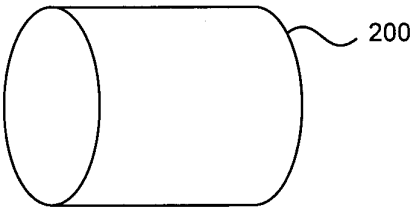

FIG. 2

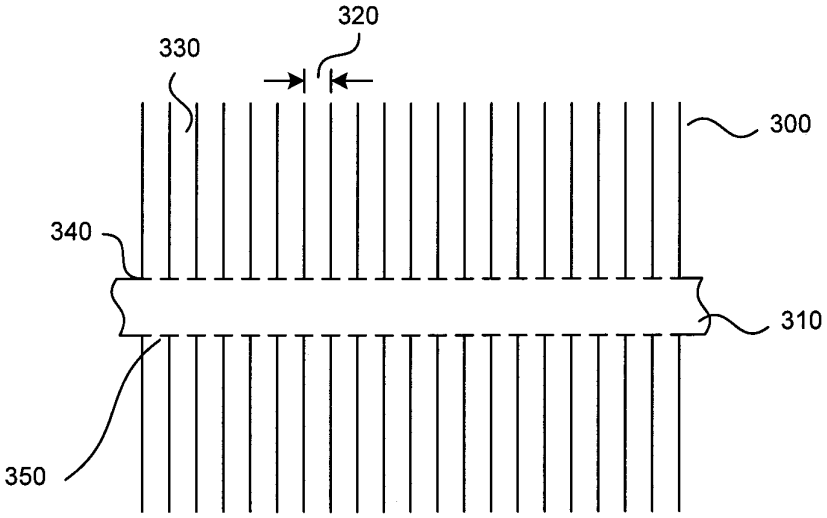

FIG. 3

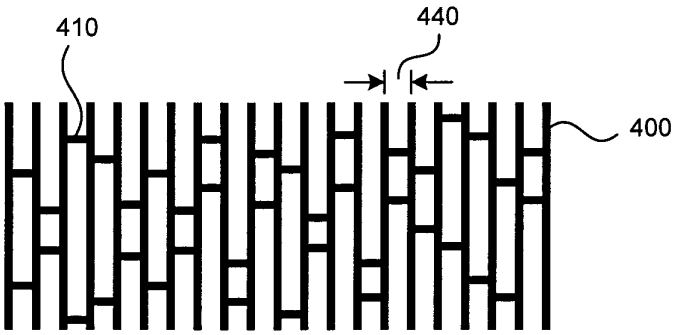

FIG. 4

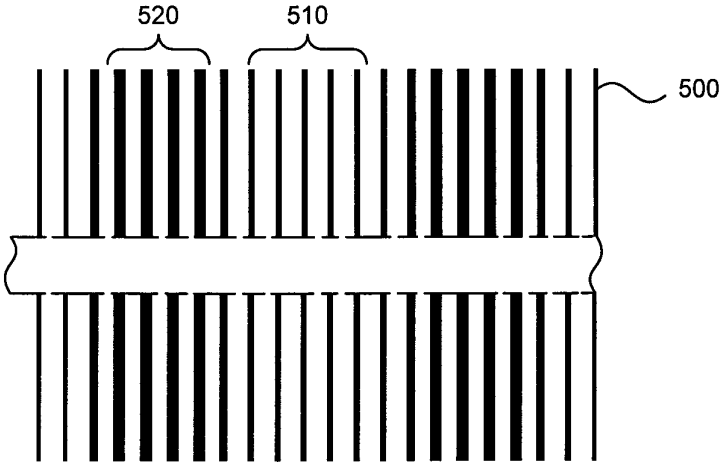

FIG. 5

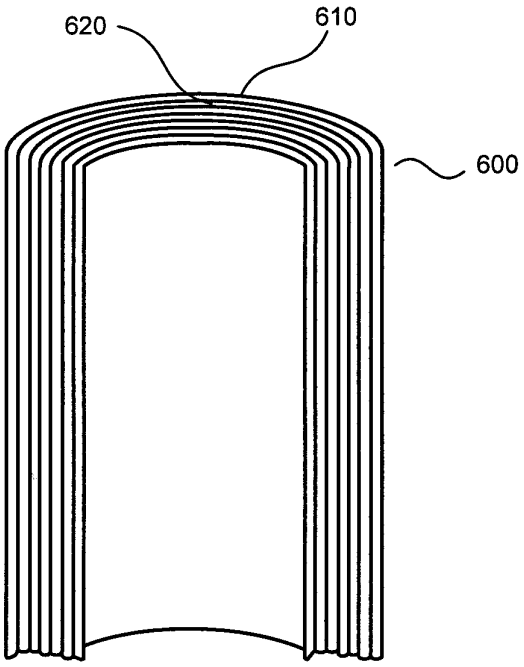

FIG. 6

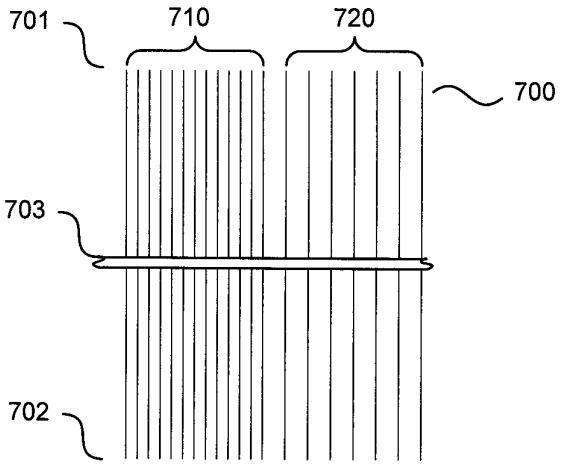

FIG. 7

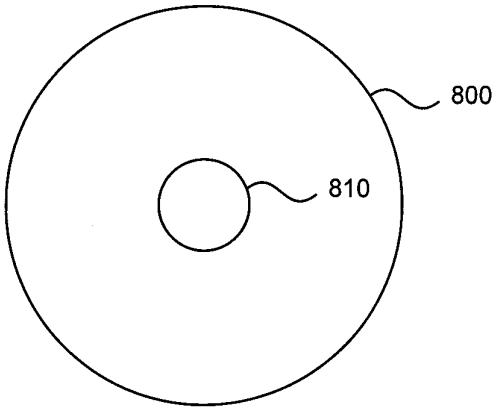

FIG. 8

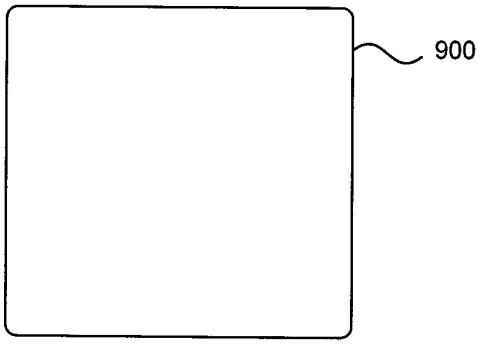

FIG. 9

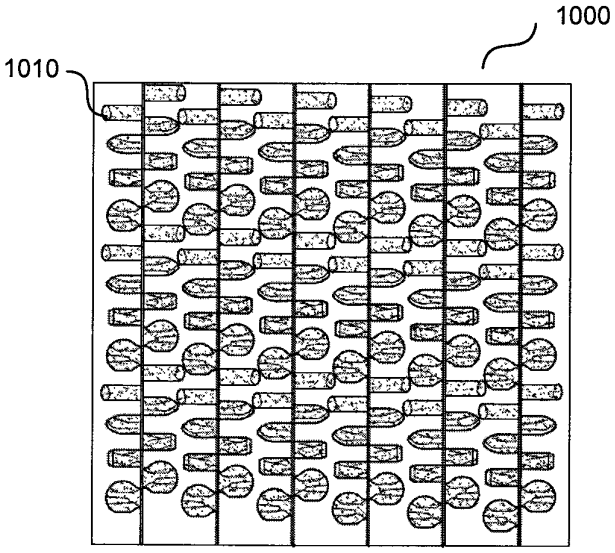

FIG. 10

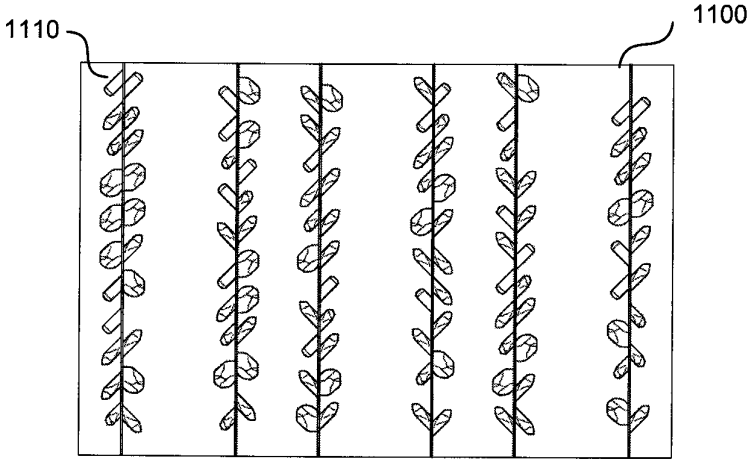

FIG. 11

PCT/US2011/024806

PATENT COOPERATION TREATY

69545-8701.WO00
SOB/NK

From the INTERNATIONAL SEARCHING AUTHORITY

To:

BETCHER SUSAN D

PERKINS COIE LLP P.O. BOX 1247 SEATTLE WA 98111-1247 USA

DOCKETING PO-01 RECEIVED
12-18-11 ☒ Deadline PATENT DOCKETING
1-18-12 ☐ Follow up
☐ Previously OCT 24 2011
☐ Abandoned
☐ Transferred PERKINS COIE LLP
☐ Redocketed

PCT

NOTIFICATION OF TRANSMITTAL OF THE INTERNATIONAL SEARCH REPORT AND THE WRITTEN OPINION OF THE INTERNATIONAL SEARCHING AUTHORITY, OR THE DECLARATION

(PCT Rule 44.1)

	Date of mailing *(day/month/year)* 18 OCTOBER 2011 (18.10.2011)
Applicant's or agent's file reference 695458701WO	**FOR FURTHER ACTION** See paragraphs 1 and 4 below
International application No. **PCT/US2011/024806**	International filing date *(day/month/year)* **14 FEBRUARY 2011 (14.02.2011)**
Applicant **MCALISTER ROY EDWARD**	

1. ☒ The applicant is hereby notified that the international search report and the written opinion of the International Searching Authority have been established and are transmitted herewith.

   Filing of amendments and statement under Article 19:

   The applicant is entitled, if he so wishes, to amend the claims of the international application (see Rule 46):

   When? The time limit for filing such amendments is normally two months from the date of transmittal of the international search report.

   Where? Directly to the International Bureau of WIPO, 34 chemin des Colombettes 1211 Geneva 20, Switzerland, Facsimile No.: +41 22 338 82 70

   For more detailed instructions, see *PCT Applicant's Guide*, International Phase, paragraphs 9.004 , 9.011.

2. ☐ The applicant is hereby notified that no international search report will be established and that the declaration under Article 17(2)(a) to that effect and the written opinion of the International Searching Authority are transmitted herewith.

3. ☐ **With regard to any protest** against payment of (an) additional fee(s) under Rule 40.2, the applicant is notified that:

   ☐ the protest together with the decision thereon has been transmitted to the International Bureau together with any request to forward the texts of both the protest and the decision thereon to the designated Offices.

   ☐ no decision has been made yet on the protest; the applicant will be notified as soon as a decision is made.

4. **Reminders**

The applicant may submit comments on an informal basis on the written opinion of the International Searching Authority to the International Bureau. The International Bureau will send a copy of such comments to all designated Offices unless an international preliminary examination report has been or is to be established. Following the expiration of 30 months from the priority date, these comments will also be made available to the public.

Shortly after the expiration of **18 months** from the priority date, the international application will be published by the International Bureau. If the applicant wishes to avoid or postpone publication, a notice of withdrawal of the international application, or of the priority claim, must reach the International Bureau before the completion of the technical preparations for international publication (Rules 90bis.1 and 90bis.3).

Within **19 months** from the priority date, but only in respect of some designated Offices, a demand for international preliminary examination must be filed if the applicant wishes to postpone the entry into the national phase **until 30 months** from the priority date (in some Offices even later); otherwise, the applicant must, **within 20 months** from the priority date, perform the prescribed acts for entry into the national phase before those designated Offices.
In respect of other designated Offices, the time limit of **30 months** (or later) will apply even if no demand is filed within 19months.

For details about the applicable time limits, Office by Office, see www.wipo.int/pct/en/texts/time_limits.html and the PCT Applicant's Guide, National Chapters.

Name and mailing address of the ISA/KR Korean Intellectual Property Office Government Complex-Daejeon, 189 Cheongsa-ro, Seo-gu, Daejeon 302-701, Republic of Korea Facsimile No. 82-42-472-7140	Authorized officer COMMISSIONER Telephone No. 82-42-481-8754

* Attention

Copies of the documents cited in the international search report can be searched in the following Korean Intellectual Property Office English website for three months from the date of mailing of the international search report.

http://www.kipo.go.kr/en/ => PCT Services => PCT Services

ID : PCT international application number
PW : **XDEKTEKK**

Inquiries related to PCT International Search Report or Written Opinion prepared by KIPO as an International Searching Authority can be answered not only by KIPO but also through IPKC (Intellectual Property Korea Center), located in Vienna, VA, which functions as a PCT Help Desk for PCT applicants.

Homepage: http://www.ipkcenter.com
Email: ipkc@ipkcenter.com
Phone: +1 703 388 1066
Fax: +1 703 388 1084

PATENT COOPERATION TREATY

PCT

INTERNATIONAL SEARCH REPORT

(PCT Article 18 and Rules 43 and 44)

Applicant's or agent's file reference 695458701WO	FOR FURTHER ACTION	see Form PCT/ISA/220 as well as, where applicable, item 5 below.
International application No. **PCT/US2011/024806**	International filing date *(day/month/year)* **14 FEBRUARY 2011 (14.02.2011)**	(Earliest) Priority Date *(day/month/year)* 13 FEBRUARY 2010 (13.02.2010)
Applicant **MCALISTER ROY EDWARD**		

This International search report has been prepared by this International Searching Authority and is transmitted to the applicant according to Article 18. A copy is being transmitted to the International Bureau.

This international search report consists of a total of 3 sheets.

☒ It is also accompanied by a copy of each prior art document cited in this report.

1. **Basis of the report**
   a. With regard to the **language**, the international search was carried out on the basis of:
      ☒ the international application in the language in which it was filed
      ☐ a translation of the international application into _____, which is the language of a translation furnished for the purposes of international search (Rules 12.3(a) and 23.1(b))
   b. ☐ This international search report has been established taking into account the **rectification of an obvious mistake** authorized by or notified to this Authority under Rule 91 (Rule 43.6*bis*(a)).
   c. ☐ With regard to any **nucleotide and/or amino acid sequence** disclosed in the international application, see Box No. I.
2. ☐ **Certain claims were found unsearchable** (See Box No. II)
3. ☐ **Unity of invention is lacking** (See Box No. III)
4. With regard to the **title**,
   ☒ the text is approved as submitted by the applicant.
   ☐ the text has been established by this Authority to read as follows:
5. With regard to the **abstract**,
   ☒ the text is approved as submitted by the applicant.
   ☐ the text has been established, according to Rule 38.2, by this Authority as it appears in Box No. IV. The applicant may, within one month from the date of mailing of this international search report, submit comments to this Authority.
6. With regard to the drawings,
   a. the figure of the drawings to be published with the abstract is Figure No. 1C
      ☒ as suggested by the applicant.
      ☐ as selected by this Authority, because the applicant failed to suggest a figure.
      ☐ as selected by this Authority, because this figure better characterizes the invention.
   b. ☐ none of the figure is to be published with the abstract.

INTERNATIONAL SEARCH REPORT

International application No.
PCT/US2011/024806

A. CLASSIFICATION OF SUBJECT MATTER

B32B 7/02(2006.01)i, C01B 31/04(2006.01)i, C01B 35/08(2006.01)i, B32B 9/00(2006.01)i

According to International Patent Classification (IPC) or to both national classification and IPC

B. FIELDS SEARCHED

Minimum documentation searched (classification system followed by classification symbols)
B32B 7/02; H03H 9/15; H02N 2/00; B29D 22/00; B29D 23/00; H03H 9/54

Documentation searched other than minimum documentation to the extent that such documents are included in the fields searched
Korean utility models and applications for utility models
Japanese utility models and applications for utility models

Electronic data base consulted during the international search (name of data base and, where practicable, search terms used)
eKOMPASS(KIPO internal) & Keywords: acoustic resonant, refraction, paralleled crystal layer, spacer

C. DOCUMENTS CONSIDERED TO BE RELEVANT

Category*	Citation of document, with indication, where appropriate, of the relevant passages	Relevant to claim No.
A	US 6503584 B1 (Roy E. McAlister) 07 January 2003. See the whole document.	1-24
A	US 2004-0056566 A1 (Robert W. Rubach) 25 March 2004. See the whole document.	1-24
A	US 7138889 B2 (Kenneth Meade Lakin) 21 November 2006. See the whole document.	1-24
A	Lorenzo Sanchis et al., Phys. Rev. B, Vol.67, 2003, p35422. See the whole document.	1-24
A	Ying Cheng et al., Appl. Phys. Lett., Vol.92, 2008, p151913. See the whole document.	1-24

☐ Further documents are listed in the continuation of Box C. ☒ See patent family annex.

* Special categories of cited documents:
"A" document defining the general state of the art which is not considered to be of particular relevance
"E" earlier application or patent but published on or after the international filing date
"L" document which may throw doubts on priority claim(s) or which is cited to establish the publication date of citation or other special reason (as specified)
"O" document referring to an oral disclosure, use, exhibition or other means
"P" document published prior to the international filing date but later than the priority date claimed
"T" later document published after the international filing date or priority date and not in conflict with the application but cited to understand the principle or theory underlying the invention
"X" document of particular relevance; the claimed invention cannot be considered novel or cannot be considered to involve an inventive step when the document is taken alone
"Y" document of particular relevance; the claimed invention cannot be considered to involve an inventive step when the document is combined with one or more other such documents,such combination being obvious to a person skilled in the art
"&" document member of the same patent family

Date of the actual completion of the international search	Date of mailing of the international search report
18 OCTOBER 2011 (18.10.2011)	**18 OCTOBER 2011 (18.10.2011)**
Name and mailing address of the ISA/KR Korean Intellectual Property Office Government Complex-Daejeon, 189 Cheongsa-ro, Seo-gu, Daejeon 302-701, Republic of Korea Facsimile No. 82-42-472-7140	Authorized officer CHANG, BONG HO Telephone No. 82-42-481-3353

INTERNATIONAL SEARCH REPORT

Information on patent family members

International application No.
PCT/US2011/024806

Patent document cited in search report	Publication date	Patent family member(s)	Publication date
US 6503584 B1	07.01.2003	US 06015065 A	18.01.2000
US 2004-0056566 A1	25.03.2004	US 6833654 B2	21.12.2004
US 7138889 B2	21.11.2006	US 2006-214747 A1	28.09.2006

PATENT COOPERATION TREATY

From the
INTERNATIONAL SEARCHING AUTHORITY

To:
BETCHER SUSAN D.

PERKINS COIE LLP P.O. BOX 1247 SEATTLE WA 98111-1247 USA

PCT

WRITTEN OPINION OF THE INTERNATIONAL SEARCHING AUTHORITY

(PCT Rule 43bis.1)

Date of mailing *(day/month/year)*	**18 OCTOBER 2011 (18.10.2011)**
Applicant's or agent's file reference 695458701WO	**FOR FURTHER ACTION** See paragraph 2 below

International application No.	International filing date *(day/month/year)*	Priority date *(day/month/year)*
PCT/US2011/024806	**14 FEBRUARY 2011 (14.02.2011)**	13 FEBRUARY 2010 (13.02.2010)

International Patent Classification (IPC) or both national classification and IPC

B32B 7/02(2006.01)i, C01B 31/04(2006.01)i, C01B 35/08(2006.01)i, B32B 9/00(2006.01)i

Applicant

MCALISTER ROY EDWARD

1. This opinion contains indications relating to the following items:

- [x] Box No. I Basis of the opinion
- [ ] Box No. II Priority
- [ ] Box No. III Non-establishment of opinion with regard to novelty, inventive step and industrial applicability
- [ ] Box No. IV Lack of unity of invention
- [x] Box No. V Reasoned statement under Rule 43bis.1(a)(i) with regard to novelty, inventive step or industrial applicability; citations and explanations supporting such statement
- [ ] Box No. VI Certain documents cited
- [ ] Box No. VII Certain defects in the international application
- [x] Box No. VIII Certain observations on the international application

2. **FURTHER ACTION**

If a demand for international preliminary examination is made, this opinion will be considered to be a written opinion of the International Preliminary Examining Authority ("IPEA") except that this does not apply where the applicant chooses an Authority other than this one to be the IPEA and the chosen IPEA has notified the International Bureau under Rule 66.1bis(b) that written opinions of this International Searching Authority will not be so considered.

If this opinion is, as provided above, considered to be a written opinion of the IPEA, the applicant is invited to submit to the IPEA a written reply together, where appropriate, with amendments, before the expiration of 3 months from the date of mailing of Form PCT/ISA/220 or before the expiration of 22 months from the priority date, whichever expires later.
For further options, see Form PCT/ISA/220.

Name and mailing address of the ISA/KR	Date of completion of this opinion	Authorized officer
Korean Intellectual Property Office Government Complex-Daejeon, 189 Cheongsa-ro, Seo-gu, Daejeon 302-701, Republic of Korea Facsimile No. 82-42-472-7140	18 OCTOBER 2011 (18.10.2011)	CHANG, BONG HO Telephone No.82-42-481-3353

WRITTEN OPINION OF THE INTERNATIONAL SEARCHING AUTHORITY	International application No. PCT/US2011/024806

Box No. I Basis of this opinion

1. With regard to the language, this opinion has been established on the basis of:

   ☒ the international application in the language in which it was filed

   ☐ a translation of the international application into _____, which is the language of a translation furnished for the purposes of international search (Rules 12.3(a) and 23.1(b))

2. ☐ This opinion has been established taking into account the **rectification of an obvious mistake** authorized by or notified to this Authority under Rule 91 (Rule 43*bis*.1(a))

3. With regard to any **nucleotide and/or amino acid sequence** disclosed in the international application, this opinion has been established on the basis of:

   a. a sequence listing filed or furnished
      ☐ on paper
      ☐ in electronic form

   b. time of filing or furnishing
      ☐ contained in the international application as filed.
      ☐ filed together with the international application in electronic form.
      ☐ furnished subsequently to this Authority for the purposes of search.

4. ☐ In addition, in the case that more than one version or copy of a sequence listing has been filed or furnished, the required statements that the information in the subsequent or additioanl copies is identical to that in the application as filed or does not go beyond the application as filed, as appropriate, were furnished.

5. Additional comments:

WRITTEN OPINION OF THE INTERNATIONAL SEARCHING AUTHORITY

International application No.
PCT/US2011/024806

Box No. V Reasoned statement under Rule 43bis.1(a)(i) with regard to novelty, inventive step or industrial applicability; citations and explanations supporting such statement

1. Statement

Novelty (N)	Claims	1-24	YES
	Claims	NONE	NO
Inventive step (IS)	Claims	1-24	YES
	Claims	NONE	NO
Industrial applicability (IA)	Claims	1-24	YES
	Claims	NONE	NO

2. Citations and explanations :

Reference is made to the following documents:

D1: US 6503584 B1
D2: US 2004-0056566 A1
D3: US 7138889 B2
D4: Phys. Rev. B, Vol.67, 2003, p35422.
D5: Appl. Phys. Lett., Vol.92, 2008, p151913.

I. Novelty and Inventive Step

None of above-mentioned prior art documents disclose an architectural construct having various properties given by specific configurations of crystals described in claims 1, 8, 12 and 18.

Moreover, the above-mentioned technical features are not taught or suggested anywhere in D1-D5.

Therefore, the subject matter of claims 1, 8, 12 and 18 is considered to be novel and to involve an inventive step under PCT Articles 33(2) and 33(3) over D1-D5 and any combination of them.

Claims 2-7, 9-11, 13-17 and 19-24 are dependent on claims 1, 8, 12 and 18, respectively, and as such also meet the requirements of the PCT with respect to novelty and inventive step.

II. Industrial Applicability

Claims 1-24 meet the requirements of industrial applicability under PCT Article 33(4).

WRITTEN OPINION OF THE INTERNATIONAL SEARCHING AUTHORITY

International application No.
PCT/US2011/024806

Box No. VIII Certain observations on the international application

The following observations on the clarity of the claims, description, and drawings or on the question whether the claims are fully supported by the description, are made:

The term, "Architectural construct" of claims 1-24 does not clearly show whether the subject matter of these claims is a material or a method.

Therefore, the above-mentioned claims do not meet the requirements of PCT Article 6.

UNITED STATES PATENT AND TRADEMARK OFFICE

Commissioner for Patents
United States Patent and Trademark Office
P.O. Box 1450

PERKINS COIE LLP
PATENT-SEA
P.O. BOX 1247
SEATTLE WA 98111-1247

MAILED
FEB 13 2012
OFFICE OF PETITIONS

In re Application of
Roy Edward MCALISTER
Application No. 13/027,214
Filed: February 14, 2011
Atty. Docket No.: 695458701US
For: ARCHITECTURAL CONSTRUCT HAVING FOR EXAMPLE A PLURALITY OF ARCHITECTURAL CRYSTALS

: DECISION ON REQUEST TO
: PARTICIPATE IN PCT-PPH PROGRAM
: AND PETITION TO MAKE SPECIAL
: UNDER 37 CFR 1.102(a)

This is a decision on the request to participate in the PCT Patent Prosecution Highway (PCT-PPH) program and the petition under 37 CFR 1.102(a), filed January 23, 2012, to make the above-identified application special.

The request is **GRANTED**.

A grantable request to participate in the PCT –PPH program and petition to make special under 37 CFR 1.102(a) require:

(1) the U.S. application must have an eligible relationship to one or more PCT application where the ISA or IPEA are the JPO, EPO, KIPO, IPAU, Russia, Spain, Finland, Austria, or USPTO;

(2) at least one claim in the PCT application has novelty, inventive step, and industrial applicability and must be free of any observations in Box VIII in the latest work product in the international stage or applicant must identify and explain why the claim(s) is/are not subject to the observation in Box VIII;

(3) applicant must submit a copy of the claim(s) from the PCT application(s) that have novelty, inventive step, and industrial applicability along with an English translation thereof and a statement that the English translation is accurate, if the claims are not in the English language;

(4) all the claims in the U.S. application must sufficiently correspond or be amended to sufficiently correspond to the claim(s) that have novelty, inventive step, and industrial applicability in the PCT application(s);

(5) examination of the U.S. application has not begun;

(6) applicant must submit a copy of the latest international work product from the PCT application indicating that the claim(s) have novelty, inventive step, and industrial applicability along with an English translation thereof;

(7) applicant must submit an IDS listing the documents cited by the PCT examiner in the international work product along with copies of documents except U.S. patents or U.S. patent application publications; and

(8) applicant is required to submit a claims correspondence table in English which indicates how all the claims in the U.S. application correspond to the claims indicated as having novelty, inventive step, and industrial applicability in the latest international work product.

The request to participate in the PCT-PPH program and petition comply with the above requirements. Accordingly, the above-identified application has been accorded "special" status.

Telephone inquiries concerning this decision should be directed to Robert DeWitty, Petitions Attorney, Office of Petitions (571-272-8427). All other inquiries concerning the examination or status of the application is accessible in the PAIR system at http://www.uspto.gov/ebc.index.html.

This application will be forwarded to Technology Center Art Unit 1723 for action commensurate with this decision.

Thurman K. Page

David Bucci
Petitions Examiner
Office of Petitions

Doc Code: PET.GREEN
Document Description: Petition for Green Tech Pilot

PTO/SB/420 (11-10)
Approved for use through 01/31/2011. OMB 0651-0062
U.S. Patent and Trademark Office; U.S. DEPARTMENT OF COMMERCE
Under the Paperwork Reduction Act of 1995, no persons are required to respond to a collection of information unless it displays a valid OMB control number.

PETITION TO MAKE SPECIAL UNDER THE GREEN TECHNOLOGY PILOT PROGRAM

Attorney Docket Number:	695458608US	Application Number (if known): 13/027,215- Conf. #6395	Filing date: February 14, 2011
First Named Inventor:	Roy E. McAlister, P.E.		
Title:	INDUCTION FOR THERMOCHEMICAL PROCESSES, AND ASSOCIATED SYSTEMS AND METHODS		

APPLICANT HEREBY REQUESTS TO PARTICIPATE IN THE GREEN TECHNOLOGY PILOT PROGRAM FOR THE ABOVE-IDENTIFIED APPLICATION. See Instruction Sheet on page 2.

This petition must be timely filed electronically using the USPTO electronic filing system, EFS-Web.

1. By filing this petition:

   Applicant is requesting early publication: Applicant hereby requests early publication under 37 CFR 1.219 and the publication fee set forth in 37 CFR 1.18(d) accompanies this request.

2. By filing this petition: applicant is agreeing to make an election without traverse in a telephonic interview and elect an invention that meets the eligibility requirements for the Green Technology Pilot Program, if the Office determines that the claims are not obviously directed to a single invention. See Instruction Sheet.

3. This request is accompanied by statements of special status for the eligibility requirement.

4. The application contains no more than three (3) independent claims and twenty (20) total claims.

5. The application does not contain any multiple dependent claims.

6. Other attachments: Statement in Support of Petition

Signature		Date	5.2.11
Name (Print/Typed)	Susan D. Betcher	Registration Number	43,498

Note: Signatures of all the inventors or assignees of record of the entire interest or their representative(s) are required in accordance with 37 CFR 1.33 and 11.18. Please see 37 CFR 1.4(d) for the form of the signature. If necessary, submit multiple forms if more than one signature, see below.*

☐ *Total of 1 forms are submitted.

Docket No.: 695458608US
(PATENT)

IN THE UNITED STATES PATENT AND TRADEMARK OFFICE

In re Patent Application of:
Roy E. McAlister, P.E.

Application No.: 13/027,215

Confirmation No.: 6395

Filed: February 14, 2011

Art Unit: 2812

For: INDUCTION FOR THERMOCHEMICAL PROCESSES, AND ASSOCIATED SYSTEMS AND METHODS

Examiner: Not Yet Assigned

STATEMENT IN SUPPORT OF PETITION TO MAKE SPECIAL

MS Missing Parts
Commissioner for Patents
P.O. Box 1450
Alexandria, VA 22313-1450

Sir:

This paper is filed in support of the Petition to Make Special under the Green Technology Pilot Program filed concurrently herewith.

Petitioner hereby states that the referenced application is directed to a single invention that materially enhances the quality of the environment, or that materially contributes to: (1) the discovery or development of renewable energy resources; (2) the more efficient utilization and conservation of energy resources; or (3) green house gas emission reduction.

More specifically, the specification and claims are directed to the more efficient utilization and conservation of energy resources by forming a material using induction for thermochemical processes.

In light of the above, it is requested that the Petition to Make Special under the Green Technology Pilot Program be granted.

Applicant believes no fee is due with this response. However, if a fee is due, please charge our Deposit Account No. 50-0665, under Order No. 695458608US from which the undersigned is authorized to draw.

Dated: 5.2.11

Respectfully submitted,

By

Susan D. Betcher
Registration No.: 43,498
PERKINS COIE LLP
P.O. Box 1247
Seattle, Washington 98111-1247
(206) 359-8000
(206) 359-7198 (Fax)
Attorney for Applicant

UNITED STATES PATENT AND TRADEMARK OFFICE

UNITED STATES DEPARTMENT OF COMMERCE
United States Patent and Trademark Office
Address: COMMISSIONER FOR PATENTS
P.O. Box 1450
Alexandria, Virginia 22313-1450
www.uspto.gov

APPLICATION NO.	FILING DATE	FIRST NAMED INVENTOR	ATTORNEY DOCKET NO.	CONFIRMATION NO.
13/027,215	02/14/2011	Roy Edward McAlister	695458608US	6395

25096 7590 05/26/2011
PERKINS COIE LLP
PATENT-SEA
P.O. BOX 1247
SEATTLE, WA 98111-1247

EXAMINER

ART UNIT	PAPER NUMBER
1723	

NOTIFICATION DATE	DELIVERY MODE
05/26/2011	ELECTRONIC

Please find below and/or attached an Office communication concerning this application or proceeding.

The time period for reply, if any, is set in the attached communication.

Notice of the Office communication was sent electronically on above-indicated "Notification Date" to the following e-mail address(es):

patentprocurement@perkinscoie.com

UNITED STATES PATENT AND TRADEMARK OFFICE

Commissioner for Patents
United States Patent and Trademark Office
P.O. Box 1450
Alexandria, VA 22313-1450
www.uspto.gov

PERKINS COIE LLP
PATENT-SEA
P.O. BOX 1247
SEATTLE WA 98111-1247

5/26/11

In re Application of	:	
McAlister	:	DECISION ON PETITION
Application No. 13/027,215	:	TO MAKE SPECIAL UNDER
Filed: 2/14/2011	:	THE GREEN TECHNOLOGY
Attorney Docket No. **695458608US**	:	PILOT PROGRAM

This is a decision on the petition under 37 CFR 1.102, filed 5/2/2011, to make the above-identified application special under the pilot program for applications pertaining to Green Technologies as set forth in 74 Federal Register Notice 64666 (December 8, 2009) and amended by 75 Federal Register Notice 28554 (May 21, 2010) and 75 Federal Register Notice 69049 (November 10, 2010).

The petition is **GRANTED**.

A grantable petition to make an application special under 37 CFR 1.102 and the pilot program as set forth in 74 FR 64666 must be directed to a nonprovisional application filed under 35 USC 111(a) or be a national stage entry under 35 USC 371, exclusive of any reissue applications.

In order to qualify for special status, the following requirements must be met. 1) The application must have no more than 3 independent claims and no more than 20 total claims. 2) The application must not contain any multiple dependent claims. 3) The petition must state the basis for seeking special status, i.e., the claimed invention either: A) materially enhances the quality of the environment or B) materially contributes to: i) the discovery or development of renewable energy resources, ii) the more efficient utilization and conservation of energy resources, or iii) greenhouse gas emission reduction. 4) If the disclosure is not clear on its face that the claimed invention materially contributes under category (A) or (B), the petition must be accompanied by a statement by the applicant, assignee, or an attorney/agent registered to practice before the Office explaining how the materiality standard is met. 5) A statement that applicant will agree to make an election without traverse in a telephonic interview if a restriction requirement is made by the examiner. 6) The petition to make special must be filed electronically. 7) The petition must be filed at least one day prior to the date that a first Office Action appears in the Patent Application Information Retrieval (PAIR) system. 8) The petition must be accompanied by a

request for early publication in compliance with 37 CFR 1.219 and include the publication fee as set forth in 37 CFR 1.18(d).

The requirement for a fee for consideration of the petition to make special for applications pertaining to Green Technologies has been waived.

The instant petition complies with items 1 – 8 above. Accordingly, the above-identified application has been accorded "special" status.

Telephone inquires concerning this decision should be directed to Tom Dunn at 571-272-1171.

The application is being forwarded to the Technology Center Art Unit 1723 for action on the merits commensurate with this decision.

/Tom Dunn/

Tom Dunn
Quality Assurance Specialist
Technology Center 1700

UNITED STATES PATENT AND TRADEMARK OFFICE

Commissioner for Patents
United States Patent and Trademark Office
P.O. Box 1450
Alexandria, VA 22313-1450
www.uspto.gov

In re Application of
Erwin Martin Becker

Application No. 13027234

Filed:

Attorney Docket No. BECK02

:DECISION ON PETITION TO MAKE SPECIAL
:UNDER 37 CFR 1.102(c)(1)

This is a decision on the electronic petition under 37 CFR 1.102 (c)(1), filed 15-FEB-2011 to make the above-identified application special based on applicant's age as set forth in MPEP § 708.02, Section IV.

The petition is **GRANTED**.

A grantable petition to make an application special under 37 CFR 1.102(c)(1), MPEP § 708.02, Section IV: Applicant's Age must include a statement by applicant or a registered practitioner having evidence that applicant is at least 65 years of age. No fee is required.

Accordingly, the above-identified application has been accorded "special" status and will be taken up for action by the examiner upon the completion of all pre-examination processing.

Telephone inquiries concerning this electronic decision should be directed to the Electronic Business Center at 866-217-9197.

All other inquiries concerning either the examination or status of the application should be directed to the Technology Center.

Doc Code: PET.GREEN
Document Description: Petition for Green Tech Pilot

PTO/SB/420 (11-10)
Approved for use through 01/31/2011. OMB 0651-0062
U.S. Patent and Trademark Office; U.S. DEPARTMENT OF COMMERCE
Under the Paperwork Reduction Act of 1995, no persons are required to respond to a collection of information unless it displays a valid OMB control number.

PETITION TO MAKE SPECIAL UNDER THE GREEN TECHNOLOGY PILOT PROGRAM

Attorney Docket Number:	695458505US	Application Number (if known): 13/027,235- Conf. #6457	Filing date: February 14, 2011
First Named Inventor:	Roy E. McAlister, P.E.		
Title:	DELIVERY SYSTEMS WITH IN-LINE SELECTIVE EXTRACTION DEVICES AND ASSOCIATED METHODS OF OPERATION		

APPLICANT HEREBY REQUESTS TO PARTICIPATE IN THE GREEN TECHNOLOGY PILOT PROGRAM FOR THE ABOVE-IDENTIFIED APPLICATION. See Instruction Sheet on page 2.

This petition must be timely filed electronically using the USPTO electronic filing system, EFS-Web.

1. By filing this petition:

   Applicant is requesting early publication: Applicant hereby requests early publication under 37 CFR 1.219 and the publication fee set forth in 37 CFR 1.18(d) accompanies this request.

2. By filing this petition: applicant is agreeing to make an election without traverse in a telephonic interview and elect an invention that meets the eligibility requirements for the Green Technology Pilot Program, if the Office determines that the claims are not obviously directed to a single invention. See Instruction Sheet.

3. This request is accompanied by statements of special status for the eligibility requirement.

4. The application contains no more than three (3) independent claims and twenty (20) total claims.

5. The application does not contain any multiple dependent claims.

6. Other attachments: Statement in Support of Petition

Signature		Date	5.3.11
Name (Print/Typed)	Susan D. Betcher	Registration Number	43,498

Note: Signatures of all the inventors or assignees of record of the entire interest or their representative(s) are required in accordance with 37 CFR 1.33 and 11.18. Please see 37 CFR 1.4(d) for the form of the signature. If necessary, submit multiple forms if more than one signature, see below.*

☐ *Total of 1 forms are submitted.

Docket No.: 695458505US
(PATENT)

IN THE UNITED STATES PATENT AND TRADEMARK OFFICE

In re Patent Application of:
Roy E. McAlister, P.E.

Application No.: 13/027,235

Confirmation No.: 6457

Filed: February 14, 2011

Art Unit: 3766

For: DELIVERY SYSTEMS WITH IN-LINE SELECTIVE EXTRACTION DEVICES AND ASSOCIATED METHODS OF OPERATION

Examiner: Not Yet Assigned

STATEMENT IN SUPPORT OF PETITION TO MAKE SPECIAL

MS Missing Parts
Commissioner for Patents
P.O. Box 1450
Alexandria, VA 22313-1450

Sir:

This paper is filed in support of the Petition to Make Special under the Green Technology Pilot Program filed concurrently herewith.

Petitioner hereby states that the referenced application is directed to a single invention that materially enhances the quality of the environment, or that materially contributes to: (1) the discovery or development of renewable energy resources; (2) the more efficient utilization and conservation of energy resources; or (3) green house gas emission reduction.

More specifically, the specification and the claims are directed to the more efficient utilization and conservation of energy resources using delivery systems with in-line selective extraction devices for extracting, for example, hydrogen.

In light of the above, it is requested that the Petition to Make Special under the Green Technology Pilot Program be granted.

Applicant believes no fee is due with this response. However, if a fee is due, please charge our Deposit Account No. 50-0665, under Order No. 695458505US from which the undersigned is authorized to draw.

Dated: 5.3.11

Respectfully submitted,

By

Susan D. Betcher
Registration No.: 43,498
PERKINS COIE LLP
P.O. Box 1247
Seattle, Washington 98111-1247
(206) 359-8000
(206) 359-7198 (Fax)
Attorney for Applicant

UNITED STATES PATENT AND TRADEMARK OFFICE

UNITED STATES DEPARTMENT OF COMMERCE
United States Patent and Trademark Office
Address: COMMISSIONER FOR PATENTS
P.O. Box 1450
Alexandria, Virginia 22313-1450
www.uspto.gov

APPLICATION NO.	FILING DATE	FIRST NAMED INVENTOR	ATTORNEY DOCKET NO.	CONFIRMATION NO.
13/027,235	02/14/2011	Roy Edward McAlister	695458505US	6457

25096 7590 05/26/2011
PERKINS COIE LLP
PATENT-SEA
P.O. BOX 1247
SEATTLE, WA 98111-1247

EXAMINER
GREENE, JASON M

ART UNIT	PAPER NUMBER
1776	

NOTIFICATION DATE	DELIVERY MODE
05/26/2011	ELECTRONIC

Please find below and/or attached an Office communication concerning this application or proceeding.

The time period for reply, if any, is set in the attached communication.

Notice of the Office communication was sent electronically on above-indicated "Notification Date" to the following e-mail address(es):

patentprocurement@perkinscoie.com

UNITED STATES PATENT AND TRADEMARK OFFICE

Commissioner for Patents
United States Patent and Trademark Office
P.O. Box 1450
Alexandria, VA 22313-1450
www.uspto.gov

PERKINS COIE LLP
PATENT-SEA
P.O. BOX 1247
SEATTLE WA 98111-1247

5/26/11

In re Application of	:	
McAlister	:	DECISION ON PETITION
Application No. 13/027,235	:	TO MAKE SPECIAL UNDER
Filed: 2/14/2011	:	THE GREEN TECHNOLOGY
Attorney Docket No. **695458505US**	:	PILOT PROGRAM

This is a decision on the petition under 37 CFR 1.102, filed 5/3/2011, to make the above-identified application special under the pilot program for applications pertaining to Green Technologies as set forth in 74 Federal Register Notice 64666 (December 8, 2009) and amended by 75 Federal Register Notice 28554 (May 21, 2010) and 75 Federal Register Notice 69049 (November 10, 2010).

The petition is **DISMISSED**.

If reconsideration of this decision is desired, a petition for reconsideration must be filed within ONE (1) MONTH OR THIRTY (30) DAYS from the mail date of this decision, whichever is longer. No extension of this time limit can be granted under 37 CFR 1.136(a) or (b). The petition for reconsideration should include an exhaustive attempt to provide the lacking item(s) noted below, since, after a decision on the petition for reconsideration, no further reconsideration or review of the matter will be undertaken by the Director.

A grantable petition to make an application special under 37 CFR 1.102 and the pilot program as set forth in 74 FR 64666 must be directed to a nonprovisional application filed under 35 USC 111(a) or be a national stage entry under 35 USC 371, exclusive of any reissue applications.

In order to qualify for special status, the following requirements must be met. 1) The application must have no more than 3 independent claims and no more than 20 total claims. 2) The application must not contain any multiple dependent claims. 3) The petition must state the basis for seeking special status, i.e., the claimed invention either: A) materially enhances the quality of the environment or B) materially contributes to: i) the discovery or development of renewable energy resources, ii) the more efficient utilization and conservation of energy resources, or iii) greenhouse gas emission reduction. 4) If the disclosure is not clear on its face that the claimed invention materially contributes under category (A) or (B), the petition must be accompanied by

a statement by the applicant, assignee, or an attorney/agent registered to practice before the Office explaining how the materiality standard is met. 5) A statement that applicant will agree to make an election without traverse in a telephonic interview if a restriction requirement is made by the examiner. 6) The petition to make special must be filed electronically. 7) The petition must be filed at least one day prior to the date that a first Office Action appears in the Patent Application Information Retrieval (PAIR) system. 8) The petition must be accompanied by a request for early publication in compliance with 37 CFR 1.219 and include the publication fee as set forth in 37 CFR 1.18(d).

The requirement for a fee for consideration of the petition to make special for applications pertaining to Green Technologies has been waived.

The petition lacks item(s) 1.

In regard to item 1, petitioner should note that a review of the application claims has been made for the purposes of determining the number of claims contained therein. This application contains more than 3 independent claims. As set forth in the Notice, if the application contains more than 3 independent claims or more than 20 total claims, it will not be eligible to participate in the "Pilot Program for Green Technologies Including Greenhouse Gas Reduction."

Any reconsideration of this decision should be submitted through the USPTO electronic filing system, EFS-Web, and selecting the document description of "Petition for Green Tech Pilot" on the EFS-Web screen.

Telephone inquiries concerning this decision should be directed to Tom Dunn at 571-272-1171.

The application is being forwarded to the Technology Center Art Unit 1776 for action in its regular turn.

/Tom Dunn/

Tom Dunn
Quality Assurance Specialist
Technology Center 1700

Docket No.: 695458505US
(PATENT)

IN THE UNITED STATES PATENT AND TRADEMARK OFFICE

In re Patent Application of:
Roy E. McAlister, P.E.

Application No.: 13/027,235

Confirmation No.: 6457

Filed: February 14, 2011

Art Unit: 1776

For: DELIVERY SYSTEMS WITH IN-LINE SELECTIVE EXTRACTION DEVICES AND ASSOCIATED METHODS OF OPERATION

Examiner: J. M. Greene

RENEWED PETITION TO MAKE SPECIAL UNDER THE GREEN TECHNOLOGY PILOT PROGRAM

Commissioner for Patents
P.O. Box 1450
Alexandria, VA 22313-1450

Sir:

This is a renewed petition under 37 CFR 1.102 to make the present application special under the pilot program for applications pertaining to Green Technologies as set forth in 74 Federal Register Notice 64666 (December 8, 2009). This petition was previously filed on May 3, 2011 but was dismissed in the Decision on Petition to Make Special under the Green Technology Pilot Program mailed May 26, 2011.

In the Decision, the examiner alleged that the following requirement was not met in the Petition as filed on May 3, 2011:

1. The application must have no more than 3 independent claims and no more than 20 total claims.

Regarding requirement 1, petitioner submits herewith a Preliminary amendment reducing the number of claims to be within the required limit.

Petitioner respectfully requests reconsideration and allowance of the present petition. Petitioner believes no fee is due with this response. However, if a fee is due, please charge Deposit Account No. 50-0665, under Order No. 695458505US from which the undersigned is authorized to draw.

Dated: 6.27.11

Respectfully submitted,

By

Susan D. Betcher
Registration No.: 43,498
PERKINS COIE LLP
P.O. Box 1247
Seattle, Washington 98111-1247
(206) 359-8000
(206) 359-7198 (Fax)
Attorney for Applicant

UNITED STATES PATENT AND TRADEMARK OFFICE

UNITED STATES DEPARTMENT OF COMMERCE
United States Patent and Trademark Office
Address: COMMISSIONER FOR PATENTS
P.O. Box 1450
Alexandria, Virginia 22313-1450
www.uspto.gov

APPLICATION NO.	FILING DATE	FIRST NAMED INVENTOR	ATTORNEY DOCKET NO.	CONFIRMATION NO.
13/027,235	02/14/2011	Roy Edward McAlister	695458505US	6457

25096 7590 08/05/2011
PERKINS COIE LLP
PATENT-SEA
P.O. BOX 1247
SEATTLE, WA 98111-1247

EXAMINER
GREENE, JASON M

ART UNIT	PAPER NUMBER
1776	

NOTIFICATION DATE	DELIVERY MODE
08/05/2011	ELECTRONIC

Please find below and/or attached an Office communication concerning this application or proceeding.

The time period for reply, if any, is set in the attached communication.

Notice of the Office communication was sent electronically on above-indicated "Notification Date" to the following e-mail address(es):

patentprocurement@perkinscoie.com

UNITED STATES PATENT AND TRADEMARK OFFICE

Commissioner for Patents
United States Patent and Trademark Office
P.O. Box 1450
Alexandria, VA 22313-1450
www.uspto.gov

8/5/11

PERKINS COIE LLP
PATENT-SEA
P.O. BOX 1247
SEATTLE WA 98111-1247

In re Application of	:	
McAlister	:	DECISION ON PETITION
Application No. 13/027,235	:	TO MAKE SPECIAL UNDER
Filed: 2/14/2011	:	THE GREEN TECHNOLOGY
Attorney Docket No. **695458505US**	:	PILOT PROGRAM

This is a decision on the request for reconsideration, filed 6/27/2011, to make the above-identified application special under the pilot program for applications pertaining to Green Technologies as set forth in 74 Federal Register Notice 64666 (December 8, 2009) and amended by 75 Federal Register Notice 28554 (May 21, 2010) and 75 Federal Register Notice 69049 (November 10, 2010).

The petition is **GRANTED**.

A grantable petition to make an application special under 37 CFR 1.102 and the pilot program as set forth in 74 FR 64666 must be directed to a nonprovisional application filed under 35 USC 111(a) or be a national stage entry under 35 USC 371, exclusive of any reissue applications.

In order to qualify for special status, the following requirements must be met. 1) The application must have no more than 3 independent claims and no more than 20 total claims. 2) The application must not contain any multiple dependent claims. 3) The petition must state the basis for seeking special status, i.e., the claimed invention either: A) materially enhances the quality of the environment or B) materially contributes to: i) the discovery or development of renewable energy resources, ii) the more efficient utilization and conservation of energy resources, or iii) greenhouse gas emission reduction. 4) If the disclosure is not clear on its face that the claimed invention materially contributes under category (A) or (B), the petition must be accompanied by a statement by the applicant, assignee, or an attorney/agent registered to practice before the Office explaining how the materiality standard is met. 5) A statement that applicant will agree to make an election without traverse in a telephonic interview if a restriction requirement is made by the examiner. 6) The petition to make special must be filed electronically. 7) The petition must be filed at least one day prior to the date that a first Office Action appears in the Patent Application Information Retrieval (PAIR) system. 8) The petition must be accompanied by a

request for early publication in compliance with 37 CFR 1.219 and include the publication fee as set forth in 37 CFR 1.18(d).

The requirement for a fee for consideration of the petition to make special for applications pertaining to Green Technologies has been waived.

The instant petition complies with items 1 – 8 above. Accordingly, the above-identified application has been accorded "special" status.

Telephone inquires concerning this decision should be directed to Tom Dunn at 571-272-1171.

The application is being forwarded to the Technology Center Art Unit 1776 for action on the merits commensurate with this decision.

/Tom Dunn/

Tom Dunn
Quality Assurance Specialist
Technology Center 1700

Doc Code: PET.GREEN
Document Description: Petition for Green Tech Pilot

PTO/SB/420 (11-10)
Approved for use through 01/31/2011. OMB 0651-0062
U.S. Patent and Trademark Office; U.S. DEPARTMENT OF COMMERCE
Under the Paperwork Reduction Act of 1995, no persons are required to respond to a collection of information unless it displays a valid OMB control number.

PETITION TO MAKE SPECIAL UNDER THE GREEN TECHNOLOGY PILOT PROGRAM

Attorney Docket Number:	695458103US2	Application Number (if known): 13/027,236- Conf. #6458	Filing date: February 14, 2011
First Named Inventor:	Roy E. McAlister, P.E.		
Title:	SYSTEM AND METHOD FOR RENEWABLE RESOURCE PRODUCTION, FOR EXAMPLE, HYDROGEN PRODUCTION BY MICROBIAL ELECTROLYSIS, FERMENTATION, AND/OR PHOTOSYNTHESIS		

APPLICANT HEREBY REQUESTS TO PARTICIPATE IN THE GREEN TECHNOLOGY PILOT PROGRAM FOR THE ABOVE-IDENTIFIED APPLICATION. See Instruction Sheet on page 2.

This petition must be timely filed electronically using the USPTO electronic filing system, EFS-Web.

1. By filing this petition:

   Applicant is requesting early publication: Applicant hereby requests early publication under 37 CFR 1.219 and the publication fee set forth in 37 CFR 1.18(d) accompanies this request.

2. By filing this petition: applicant is agreeing to make an election without traverse in a telephonic interview and elect an invention that meets the eligibility requirements for the Green Technology Pilot Program, if the Office determines that the claims are not obviously directed to a single invention. See Instruction Sheet.

3. This request is accompanied by statements of special status for the eligibility requirement.

4. The application contains no more than three (3) independent claims and twenty (20) total claims.

5. The application does not contain any multiple dependent claims.

6. Other attachments: Statement in Support of Petition

Signature		Date	6.1.11
Name (Print/Typed)	Susan D. Betcher	Registration Number	43,498

Note: Signatures of all the inventors or assignees of record of the entire interest or their representative(s) are required in accordance with 37 CFR 1.33 and 11.18. Please see 37 CFR 1.4(d) for the form of the signature. If necessary, submit multiple forms if more than one signature, see below.*

☐ *Total of 1 forms are submitted.

Docket No.: 695458103US2
(PATENT)

IN THE UNITED STATES PATENT AND TRADEMARK OFFICE

In re Patent Application of:
Roy E. McAlister, P.E.

Application No.: 13/027,236

Confirmation No.: 6458

Filed: February 14, 2011

Art Unit: 3739

For: SYSTEM AND METHOD FOR RENEWABLE RESOURCE PRODUCTION, FOR EXAMPLE, HYDROGEN PRODUCTION BY MICROBIAL ELECTROLYSIS, FERMENTATION, AND/OR PHOTOSYNTHESIS

Examiner: Not Yet Assigned

STATEMENT IN SUPPORT OF PETITION TO MAKE SPECIAL

MS Missing Parts
Commissioner for Patents
P.O. Box 1450
Alexandria, VA 22313-1450

Sir:

This paper is filed in support of the Petition to Make Special under the Green Technology Pilot Program filed concurrently herewith.

Petitioner hereby states that the referenced application is directed to a single invention that materially enhances the quality of the environment, or that materially contributes to: (1) the discovery or development of renewable energy resources; (2) the more efficient utilization and conservation of energy resources; or (3) green house gas emission reduction.

More specifically, the specification and claims are directed to a system and method for renewable resource production such as hydrogen production by microbial electrolysis resulting in the development of renewable energy resources.

In light of the above, it is requested that the Petition to Make Special under the Green Technology Pilot Program be granted.

Applicant believes no fee is due with this response. However, if a fee is due, please charge our Deposit Account No. 50-0665, under Order No. 695458103US2 from which the undersigned is authorized to draw.

Dated: 6.1.11

Respectfully submitted,

By _____

Susan D. Betcher
Registration No.: 43,498
PERKINS COIE LLP
P.O. Box 1247
Seattle, Washington 98111-1247
(206) 359-8000
(206) 359-7198 (Fax)
Attorney for Applicant

UNITED STATES PATENT AND TRADEMARK OFFICE

UNITED STATES DEPARTMENT OF COMMERCE
United States Patent and Trademark Office
Address: COMMISSIONER FOR PATENTS
P.O. Box 1450
Alexandria, Virginia 22313-1450
www.uspto.gov

APPLICATION NO.	FILING DATE	FIRST NAMED INVENTOR	ATTORNEY DOCKET NO.	CONFIRMATION NO.
13/027,236	02/14/2011	Roy Edward McAlister	695458103US2	6458

25096 7590 08/22/2011
PERKINS COIE LLP
PATENT-SEA
P.O. BOX 1247
SEATTLE, WA 98111-1247

EXAMINER

ART UNIT	PAPER NUMBER
1723	

NOTIFICATION DATE	DELIVERY MODE
08/22/2011	ELECTRONIC

Please find below and/or attached an Office communication concerning this application or proceeding.

The time period for reply, if any, is set in the attached communication.

Notice of the Office communication was sent electronically on above-indicated "Notification Date" to the following e-mail address(es):

patentprocurement@perkinscoie.com

UNITED STATES PATENT AND TRADEMARK OFFICE

Commissioner for Patents
United States Patent and Trademark Office
P.O. Box 1450
Alexandria, VA 22313-1450
www.uspto.gov

AUG 22 2011

PERKINS COIE LLP
PATENT-SEA
P.O. BOX 1247
SEATTLE WA 98111-1247

In re Application of	:	
Roy E. McAlister	:	DECISION ON PETITION
Application No. 13/027,236	:	TO MAKE SPECIAL UNDER
Filed: February 14, 2011	:	THE GREEN TECHNOLOGY
Attorney Docket No. 695458103US2	:	PILOT PROGRAM

This is a decision on the petition under 37 CFR 1.102, filed June 01, 2011, to make the above-identified application special under the pilot program for applications pertaining to Green Technologies as set forth in 74 Federal Register Notice 64666 (December 8, 2009) and amended by 75 Federal Register Notice 28554 (May 21, 2010) and 75 Federal Register Notice 69049 (November 10, 2010).

The petition is **DISMISSED**.

If reconsideration of this decision is desired, a petition for reconsideration must be filed within ONE (1) MONTH OR THIRTY (30) DAYS from the mail date of this decision, whichever is longer. No extension of this time limit can be granted under 37 CFR 1.136(a) or (b). The petition for reconsideration should include an exhaustive attempt to provide the lacking item(s) noted below, since, after a decision on the petition for reconsideration, no further reconsideration or review of the matter will be undertaken by the Director.

A grantable petition to make an application special under 37 CFR 1.102 and the pilot program as set forth in 74 FR 64666 must be directed to a nonprovisional application filed under 35 USC 111(a) or be a national stage entry under 35 USC 371, exclusive of any reissue applications.

In order to qualify for special status, the following requirements must be met. 1) The application must have no more than 3 independent claims and no more than 20 total claims. 2) The application must not contain any multiple dependent claims. 3) The petition must state the basis for seeking special status, i.e., the claimed invention either: A) materially enhances the quality of the environment or B) materially contributes to: i) the discovery or development of renewable energy resources, ii) the more efficient utilization and conservation of energy resources, or iii) greenhouse gas emission reduction. 4) If the disclosure is not clear on its face that the claimed invention materially contributes under category (A) or (B), the petition must be accompanied by a statement by the applicant, assignee, or an attorney/agent registered to practice before the Office explaining how the materiality standard is met. 5) A statement that applicant will agree to

make an election without traverse in a telephonic interview if a restriction requirement is made by the examiner. 6) The petition to make special must be filed electronically. 7) The petition must be filed at least one day prior to the date that a first Office Action appears in the Patent Application Information Retrieval (PAIR) system. 8) The petition must be accompanied by a request for early publication in compliance with 37 CFR 1.219 and include the publication fee as set forth in 37 CFR 1.18(d).

The requirement for a fee for consideration of the petition to make special for applications pertaining to Green Technologies has been waived.

The petition lacks item 2. Claims 7-9 and 13 are multiple dependent claims. It is additionally noted that claim 15 is dependent upon itself.

Any reconsideration of this decision should be submitted through the USPTO electronic filing system, EFS-Web, and selecting the document description of "Petition for Green Tech Pilot" on the EFS-Web screen.

Telephone inquires concerning this decision should be directed to Blaine Copenheaver at 571-272-1156.

The application is being forwarded to the examiner for action in its regular turn.

/Blaine Copenheaver/

Blaine Copenheaver
Quality Assurance Specialist
Technology Center 1700

Docket No.: 695458103US2
(PATENT)

IN THE UNITED STATES PATENT AND TRADEMARK OFFICE

In re Patent Application of:
Roy E. McAlister, P.E.

Application No.: 13/027,236

Confirmation No.: 6458

Filed: February 14, 2011

Art Unit: 1723

For: SYSTEM AND METHOD FOR RENEWABLE RESOURCE PRODUCTION, FOR EXAMPLE, HYDROGEN PRODUCTION BY MICROBIAL ELECTROLYSIS, FERMENTATION, AND/OR PHOTOSYNTHESIS

Examiner: Not Yet Assigned

RENEWED PETITION TO MAKE SPECIAL UNDER THE GREEN TECHNOLOGY PILOT PROGRAM

Commissioner for Patents
P.O. Box 1450
Alexandria, VA 22313-1450

Sir:

This is a renewed petition under 37 CFR 1.102 to make the present application special under the pilot program for applications pertaining to Green Technologies as set forth in 74 Federal Register Notice 64666 (December 8, 2009). This petition was previously filed on June 1, 2011 but was dismissed in the Decision on Petition to Make Special under the Green Technology Pilot Program mailed August 22, 2011.

In the Decision, the Office of Petitions alleged that the following requirement was not met in the Petition as filed on June 1, 2011:

2. The application must not contain any multiple dependent claims.

Regarding requirement 2, petitioner submits herewith a Preliminary Amendment removing the multiple dependent claims.

Petitioner respectfully requests reconsideration and allowance of the present petition. Petitioner believes no fee is due with this response. However, if a fee is due, please charge our Deposit Account No. 50-0665, under Order No. 695458103US2 from which the undersigned is authorized to draw.

Dated: September 22, 2011

Respectfully submitted,

By_____

Susan D. Betcher
Registration No.: 43,498
PERKINS COIE LLP
P.O. Box 1247
Seattle, Washington 98111-1247
(206) 359-8000
(206) 359-7198 (Fax)
Attorney for Applicant

UNITED STATES PATENT AND TRADEMARK OFFICE

UNITED STATES DEPARTMENT OF COMMERCE
United States Patent and Trademark Office
Address: COMMISSIONER FOR PATENTS
P.O. Box 1450
Alexandria, Virginia 22313-1450
www.uspto.gov

APPLICATION NO.	FILING DATE	FIRST NAMED INVENTOR	ATTORNEY DOCKET NO.	CONFIRMATION NO.
13/027,236	02/14/2011	Roy Edward McAlister	695458103US2	6458

25096 7590 10/27/2011
PERKINS COIE LLP
PATENT-SEA
P.O. BOX 1247
SEATTLE, WA 98111-1247

EXAMINER

ART UNIT	PAPER NUMBER
1723	

NOTIFICATION DATE	DELIVERY MODE
10/27/2011	ELECTRONIC

Please find below and/or attached an Office communication concerning this application or proceeding.

The time period for reply, if any, is set in the attached communication.

Notice of the Office communication was sent electronically on above-indicated "Notification Date" to the following e-mail address(es):

patentprocurement@perkinscoie.com

UNITED STATES PATENT AND TRADEMARK OFFICE

Commissioner for Patents
United States Patent and Trademark Office
P.O. Box 1450
Alexandria, VA 22313-1450
www.uspto.gov

PERKINS COIE LLP
PATENT-SEA
P.O. BOX 1247
SEATTLE WA 98111-1247

10/27/11

In re Application of	:	
McAlister	:	DECISION ON PETITION
Application No. 13/027,236	:	TO MAKE SPECIAL UNDER
Filed: 2/14/2011	:	THE GREEN TECHNOLOGY
Attorney Docket No. **695458103US2**	:	PILOT PROGRAM

This is a decision on the request for reconsideration, filed 9/22/2011, to make the above-identified application special under the pilot program for applications pertaining to Green Technologies as set forth in 74 Federal Register Notice 64666 (December 8, 2009) and amended by 75 Federal Register Notice 28554 (May 21, 2010) and 75 Federal Register Notice 69049 (November 10, 2010).

The petition is **GRANTED**.

A grantable petition to make an application special under 37 CFR 1.102 and the pilot program as set forth in 74 FR 64666 must be directed to a nonprovisional application filed under 35 USC 111(a) or be a national stage entry under 35 USC 371, exclusive of any reissue applications.

In order to qualify for special status, the following requirements must be met. 1) The application must have no more than 3 independent claims and no more than 20 total claims. 2) The application must not contain any multiple dependent claims. 3) The petition must state the basis for seeking special status, i.e., the claimed invention either: A) materially enhances the quality of the environment or B) materially contributes to: i) the discovery or development of renewable energy resources, ii) the more efficient utilization and conservation of energy resources, or iii) greenhouse gas emission reduction. 4) If the disclosure is not clear on its face that the claimed invention materially contributes under category (A) or (B), the petition must be accompanied by a statement by the applicant, assignee, or an attorney/agent registered to practice before the Office explaining how the materiality standard is met. 5) A statement that applicant will agree to make an election without traverse in a telephonic interview if a restriction requirement is made by the examiner. 6) The petition to make special must be filed electronically. 7) The petition must be filed at least one day prior to the date that a first Office Action appears in the Patent Application Information Retrieval (PAIR) system. 8) The petition must be accompanied by a request for early publication in compliance with 37 CFR 1.219 and include the publication fee as set forth in 37 CFR 1.18(d).

The requirement for a fee for consideration of the petition to make special for applications pertaining to Green Technologies has been waived.

The instant petition complies with items 1 – 8 above. Accordingly, the above-identified application has been accorded "special" status.

Telephone inquires concerning this decision should be directed to Tom Dunn at 571-272-1171.

The application is being forwarded to the Technology Center Art Unit 1723 for action on the merits commensurate with this decision.

/Tom Dunn/

Tom Dunn
Quality Assurance Specialist
Technology Center 1700

Doc Code: PET.GREEN
Document Description: Petition for Green Tech Pilot

PTO/SB/420 (11-10)
Approved for use through 01/31/2011. OMB 0651-0062
U.S. Patent and Trademark Office; U.S. DEPARTMENT OF COMMERCE
Under the Paperwork Reduction Act of 1995, no persons are required to respond to a collection of information unless it displays a valid OMB control number.

PETITION TO MAKE SPECIAL UNDER THE GREEN TECHNOLOGY PILOT PROGRAM

Attorney Docket Number:	695458604US	Application Number (if known): 13/027,244- Conf. #6471	Filing date: February 14, 2011
First Named Inventor:	Roy E. McAlister, P.E.		
Title:	THERMAL TRANSFER DEVICE AND ASSOCIATED SYSTEMS AND METHODS		

APPLICANT HEREBY REQUESTS TO PARTICIPATE IN THE GREEN TECHNOLOGY PILOT PROGRAM FOR THE ABOVE-IDENTIFIED APPLICATION. See Instruction Sheet on page 2.

This petition must be timely filed electronically using the USPTO electronic filing system, EFS-Web.

1. By filing this petition:

   Applicant is requesting early publication: Applicant hereby requests early publication under 37 CFR 1.219 and the publication fee set forth in 37 CFR 1.18(d) accompanies this request.

2. By filing this petition: applicant is agreeing to make an election without traverse in a telephonic interview and elect an invention that meets the eligibility requirements for the Green Technology Pilot Program, if the Office determines that the claims are not obviously directed to a single invention. See Instruction Sheet.

3. This request is accompanied by statements of special status for the eligibility requirement.

4. The application contains no more than three (3) independent claims and twenty (20) total claims.

5. The application does not contain any multiple dependent claims.

6. Other attachments: Statement in Support of Petition

Signature		Date	5.9.11
Name (Print/Typed)	Susan D. Belcher	Registration Number	43,498

Note: Signatures of all the inventors or assignees of record of the entire interest or their representative(s) are required in accordance with 37 CFR 1.33 and 11.18. Please see 37 CFR 1.4(d) for the form of the signature. If necessary, submit multiple forms if more than one signature, see below.*

☐ *Total of 1 forms are submitted.

Docket No.: 695458604US
(PATENT)

IN THE UNITED STATES PATENT AND TRADEMARK OFFICE

In re Patent Application of:
Roy E. McAlister, P.E.

Application No.: 13/027,244

Confirmation No.: 6471

Filed: February 14, 2011

Art Unit: 3744

For: THERMAL TRANSFER DEVICE AND ASSOCIATED SYSTEMS AND METHODS

Examiner: Not Yet Assigned

STATEMENT IN SUPPORT OF PETITION TO MAKE SPECIAL

MS Missing Parts
Commissioner for Patents
P.O. Box 1450
Alexandria, VA 22313-1450

Sir:

This paper is filed in support of the Petition to Make Special under the Green Technology Pilot Program filed concurrently herewith.

Petitioner hereby states that the referenced application is directed to a single invention that materially enhances the quality of the environment, or that materially contributes to: (1) the discovery or development of renewable energy resources; (2) the more efficient utilization and conservation of energy resources; or (3) green house gas emission reduction.

More specifically, the specification and claims are directed to a thermal transfer system for the more efficient utilization and conservation of energy resources.

In light of the above, it is requested that the Petition to Make Special under the Green Technology Pilot Program be granted.

Applicant believes no fee is due with this response. However, if a fee is due, please charge our Deposit Account No. 50-0665, under Order No. 695458606US from which the undersigned is authorized to draw.

Dated: 5.9.11

Respectfully submitted,

By_____

Susan D. Betcher
Registration No.: 43,498
PERKINS COIE LLP
P.O. Box 1247
Seattle, Washington 98111-1247
(206) 359-6088
(206) 359-7088 (Fax)
Attorney for Applicant

UNITED STATES PATENT AND TRADEMARK OFFICE

UNITED STATES DEPARTMENT OF COMMERCE
United States Patent and Trademark Office
Address: COMMISSIONER FOR PATENTS
P.O. Box 1450
Alexandria, Virginia 22313-1450
www.uspto.gov

APPLICATION NO.	FILING DATE	FIRST NAMED INVENTOR	ATTORNEY DOCKET NO.	CONFIRMATION NO.
13/027,244	02/14/2011	Roy Edward McAlister	695458604US	6471

25096 7590 05/26/2011
PERKINS COIE LLP
PATENT-SEA
P.O. BOX 1247
SEATTLE, WA 98111-1247

EXAMINER

ART UNIT	PAPER NUMBER
1723	

NOTIFICATION DATE	DELIVERY MODE
05/26/2011	ELECTRONIC

Please find below and/or attached an Office communication concerning this application or proceeding.

The time period for reply, if any, is set in the attached communication.

Notice of the Office communication was sent electronically on above-indicated "Notification Date" to the following e-mail address(es):

patentprocurement@perkinscoie.com

UNITED STATES PATENT AND TRADEMARK OFFICE

Commissioner for Patents
United States Patent and Trademark Office
P.O. Box 1450
Alexandria, VA 22313-1450
www.uspto.gov

5/26/11

PERKINS COIE LLP
PATENT-SEA
P.O. BOX 1247
SEATTLE WA 98111-1247

In re Application of	:	
McAlister	:	DECISION ON PETITION
Application No. 13/027,244	:	TO MAKE SPECIAL UNDER
Filed: 2/14/2011	:	THE GREEN TECHNOLOGY
Attorney Docket No. **695458604US**	:	PILOT PROGRAM

This is a decision on the petition under 37 CFR 1.102, filed 5/9/2011, to make the above-identified application special under the pilot program for applications pertaining to Green Technologies as set forth in 74 Federal Register Notice 64666 (December 8, 2009) and amended by 75 Federal Register Notice 28554 (May 21, 2010) and 75 Federal Register Notice 69049 (November 10, 2010).

The petition is **DISMISSED**.

If reconsideration of this decision is desired, a petition for reconsideration must be filed within ONE (1) MONTH OR THIRTY (30) DAYS from the mail date of this decision, whichever is longer. No extension of this time limit can be granted under 37 CFR 1.136(a) or (b). The petition for reconsideration should include an exhaustive attempt to provide the lacking item(s) noted below, since, after a decision on the petition for reconsideration, no further reconsideration or review of the matter will be undertaken by the Director.

A grantable petition to make an application special under 37 CFR 1.102 and the pilot program as set forth in 74 FR 64666 must be directed to a nonprovisional application filed under 35 USC 111(a) or be a national stage entry under 35 USC 371, exclusive of any reissue applications.

In order to qualify for special status, the following requirements must be met. 1) The application must have no more than 3 independent claims and no more than 20 total claims. 2) The application must not contain any multiple dependent claims. 3) The petition must state the basis for seeking special status, i.e., the claimed invention either: A) materially enhances the quality of the environment or B) materially contributes to: i) the discovery or development of renewable energy resources, ii) the more efficient utilization and conservation of energy resources, or iii) greenhouse gas emission reduction. 4) If the disclosure is not clear on its face that the claimed invention materially contributes under category (A) or (B), the petition must be accompanied by

a statement by the applicant, assignee, or an attorney/agent registered to practice before the Office explaining how the materiality standard is met. 5) A statement that applicant will agree to make an election without traverse in a telephonic interview if a restriction requirement is made by the examiner. 6) The petition to make special must be filed electronically. 7) The petition must be filed at least one day prior to the date that a first Office Action appears in the Patent Application Information Retrieval (PAIR) system. 8) The petition must be accompanied by a request for early publication in compliance with 37 CFR 1.219 and include the publication fee as set forth in 37 CFR 1.18(d).

The requirement for a fee for consideration of the petition to make special for applications pertaining to Green Technologies has been waived.

The petition lacks item(s) 4.

In regard to item 4, petitioner should note that the instant petition includes a statement identifying the basis for the special status (i.e., whether the instant invention (1) materially enhances the quality of the environment or materially contributes to (2) development of renewable energy resources or energy conservation, or (3) greenhouse gas reduction) as required by sections II and III of the notice. However, as stated in the notice, applicant must also provide a statement pertaining to the materiality standard if the application disclosure is not clear on its face as to the materiality of the basis for the special status of the invention. It is not agreed that the application on its face meets that materiality standard.

It is submitted that the claims are directed to a thermal transfer system for the more efficient utilization and conservation of energy resources. It is unclear as to how the instantly claimed system meets the standards as set forth in the notice.

Any reconsideration of this decision should be submitted through the USPTO electronic filing system, EFS-Web, and selecting the document description of "Petition for Green Tech Pilot" on the EFS-Web screen.

Telephone inquiries concerning this decision should be directed to Tom Dunn at 571-272-1171.

The application is being forwarded to the Technology Center Art Unit 1723 for action in its regular turn.

/Tom Dunn/

Tom Dunn
Quality Assurance Specialist
Technology Center 1700

Docket No.: 695458604US
(PATENT)

IN THE UNITED STATES PATENT AND TRADEMARK OFFICE

In re Patent Application of:
Roy E. McAlister, P.E.

Application No.: 13/027,244

Confirmation No.: 6471

Filed: February 14, 2011

Art Unit: 1723

For: THERMAL TRANSFER DEVICE AND ASSOCIATED SYSTEMS AND METHODS

Examiner: Not Yet Assigned

RENEWED PETITION TO MAKE SPECIAL UNDER THE GREEN TECHNOLOGY PILOT PROGRAM

Commissioner for Patents
P.O. Box 1450
Alexandria, VA 22313-1450

Sir:

This is a renewed petition under 37 CFR 1.102 to make the present application special under the pilot program for applications pertaining to Green Technologies as set forth in 74 Federal Register Notice 64666 (December 8, 2009). This petition was previously filed on May 9, 2011 but was dismissed in the Decision on Petition to Make Special under the Green Technology Pilot Program mailed May 26, 2011.

In the Decision, the examiner alleged that the following requirements were not met in the Petition as filed on May 9, 2011:

4. If the disclosure is not clear on its face that the claims invention materially contributes under category (A) or (B), the petition must be accompanied by the applicant, assignee, or an attorney/agent registered to practice before the Office explaining how the materiality standard is met.

Regarding requirement 4, petitioner hereby states that the instant invention (1) materially enhances the quality of the environment or materially contributes to (2) development of renewable energy resources or energy conservation, or (2) greenhouse gas reduction. More specifically, the specification and claims are directed to an improved thermal transfer device and system.

Petitioner respectfully requests reconsideration and allowance of the present petition. Petitioner believes no fee is due with this response. However, if a fee is due, please charge our Deposit Account No. 50-0665, under Order No. 695458604US from which the undersigned is authorized to draw.

Dated: 6.27.11

Respectfully submitted,

By _____

Susan D. Betcher
Registration No.: 43,498
PERKINS COIE LLP
P.O. Box 1247
Seattle, Washington 98111-1247
(206) 359-8000
(206) 359-7198 (Fax)
Attorney for Applicant

UNITED STATES PATENT AND TRADEMARK OFFICE

UNITED STATES DEPARTMENT OF COMMERCE
United States Patent and Trademark Office
Address: COMMISSIONER FOR PATENTS
P.O. Box 1450
Alexandria, Virginia 22313-1450
www.uspto.gov

APPLICATION NO.	FILING DATE	FIRST NAMED INVENTOR	ATTORNEY DOCKET NO.	CONFIRMATION NO.
13/027,244	02/14/2011	Roy Edward McAlister	695458604US	6471

25096 7590 08/04/2011
PERKINS COIE LLP
PATENT-SEA
P.O. BOX 1247
SEATTLE, WA 98111-1247

EXAMINER

ART UNIT	PAPER NUMBER
1723	

NOTIFICATION DATE	DELIVERY MODE
08/04/2011	ELECTRONIC

Please find below and/or attached an Office communication concerning this application or proceeding.

The time period for reply, if any, is set in the attached communication.

Notice of the Office communication was sent electronically on above-indicated "Notification Date" to the following e-mail address(es):

patentprocurement@perkinscoie.com

UNITED STATES PATENT AND TRADEMARK OFFICE

Commissioner for Patents
United States Patent and Trademark Office
P.O. Box 1450
Alexandria, VA 22313-1450
www.uspto.gov

PERKINS COIE LLP
PATENT-SEA
P.O. BOX 1247
SEATTLE WA 98111-1247

AUG 0 4 2011

In re Application of	:	
McAlister	:	DECISION ON PETITION
Application No. 13/027,244	:	TO MAKE SPECIAL UNDER
Filed: 2/14/2011	:	THE GREEN TECHNOLOGY
Attorney Docket No. **695458604US**	:	PILOT PROGRAM

This is a decision on the request for reconsideration, filed 6/27/2011, to make the above-identified application special under the pilot program for applications pertaining to Green Technologies as set forth 74 Federal Register Notice 64666 (December 8, 2009).

The petition is **DENIED**.

A grantable petition to make an application special under 37 CFR 1.102 and the pilot program as set forth in 74 FR 64666 must be directed to a nonprovisional application filed under 35 USC 111(a) or be a national stage entry under 35 USC 371, exclusive of any reissue applications and be filed prior to the date of the notice, December 8, 2009.

In order to qualify for special status, the following requirements must be met. 1) The application must be classified in one of the eligible US classifications listed in section VI of the notice. 2) The application must have no more than 3 independent claims and no more than 20 total claims. 3) The application must not contain any multiple dependent claims. 4) The petition must state the basis for seeking special status, i.e., the claimed invention either: A) materially enhances the quality of the environment or B) materially contributes to: i) the discovery or development of renewable energy resources, ii) the more efficient utilization and conservation of energy resources, or iii) greenhouse gas emission reduction. 5) If the disclosure is not clear on its face that the claimed invention materially contributes under category (A) or (B), the petition must be accompanied by a statement by the applicant, assignee, or an attorney/agent registered to practice before the Office explaining how the materiality standard is met. 6) A statement that applicant will agree to make an election without traverse in a telephonic interview if a restriction requirement is made by the examiner. 7) The petition to make special must be filed electronically. 8) The petition must be filed at least one day prior to the date that a first Office Action appears in the Patent Application Information Retrieval (PAIR) system. 9) The petition

must be accompanied by a request for early publication in compliance with 37 CFR 1.219 and include the publication fee as set forth in 37 CFR 1.18(d).

The requirement for a fee for consideration of the petition to make special for applications pertaining to Green Technologies has been waived.

The petition lacks item(s) 4.

In regard to item 4, petitioner should note that the instant petition includes a statement identifying the basis for the special status (i.e., whether the instant invention (1) materially enhances the quality of the environment or materially contributes to (2) development of renewable energy resources or energy conservation, or (3) greenhouse gas reduction) as required by sections II and III of the notice. However, as stated in the notice, applicant must also provide a statement pertaining to the materiality standard if the application disclosure is not clear on its face as to the materiality of the basis for the special status of the invention. It is not agreed that the application on its face meets that materiality standard. Applicants argue that the instant claims are directed to an improved thermal transfer device and system. It is unclear as to how the instant thermal transfer device contributes to 1) materially enhancing the quality of the environment or materially contributing to (2) the development of renewable energy resources or energy conservation, or (3) greenhouse gas reduction as required by sections II and III of the notice. The mere transfer of heat as required by the instant claims is not sufficient to meet the standard set forth in the notice.

Any reconsideration of this decision should be submitted through the USPTO electronic filing system, EFS-Web, and selecting the document description of "Petition for Green Tech Pilot" on the EFS-Web screen.

Telephone inquiries concerning this decision should be directed to Tom Dunn at 571-272-1171.

The application is being forwarded to the Technology Center Art Unit 1723 for action in its regular turn.

/Tom Dunn/

Tom Dunn
Quality Assurance Specialist
Technology Center 1700

UNITED STATES PATENT AND TRADEMARK OFFICE

Commissioner for Patents
United States Patent and Trademark Office
P.O. Box 1450
Alexandria, VA 22313-1450
www.uspto.gov

PERKINS COIE LLP
PATENT-SEA
P.O. BOX 1247
SEATTLE WA 98111-1247

MAILED
SEP 20 2011
OFFICE OF PETITIONS

In re Application of	:	
Roy Edward McAlister	:	
Application No. 13/027,244	:	DECISION ON PETITION
Filed: February 14, 2011	:	TO MAKE SPECIAL UNDER
Attorney Docket No. 695458604US	:	37 CFR 1.102(c)(1)
	:	

This is a decision on the petition under 37 CFR 1.102(c)(1), filed September 6, 2011, to make the above-identified application special based on applicant's age as set forth in M.P.E.P. § 708.02, Section IV.

The petition is **GRANTED**.

A grantable petition to make an application special under 37 CFR 1.102(c)(1) and MPEP § 708.02, Section IV: Applicant's Age must be accompanied by evidence showing that at least one of the applicants is 65 years of age, or more, such as a birth certificate or a statement by applicant. No fee is required

The instant petition includes a statement by an attorney on behalf of inventor Roy Edward McAlister attesting to his age. The above-identified application has been accorded "special" status.

Telephone inquiries concerning this decision should be directed to Kimberly Inabinet at 571-272-4618.

All other inquiries concerning either the examination or status of the application should be directed to the Technology Center.

The application is being forwarded to the Technology Center Art Unit 1723 for action on the merits commensurate with this decision.

/Kimberly Inabinet/

Kimberly Inabinet
Petitions Examiner
Office of Petitions

PTO/SB/20PCT-KR (06-10)
Approved for use through 01/31/2012. OMB 0651-0058
U.S. Patent and Trademark Office; U.S. DEPARTMENT OF COMMERCE

Under the Paperwork Reduction Act of 1995, no persons are required to respond to a collection of information unless it displays a valid OMB control number.

REQUEST FOR PARTICIPATION IN THE PATENT COOPERATION TREATY – PATENT PROSECUTION HIGHWAY (PCT-PPH) PILOT PROGRAM BETWEEN THE KOREAN INTELLECTUAL PROPERTY OFFICE (KIPO) AND THE USPTO

Application No.:	13/027,244-Conf. #6471	Filing Date:	February 14, 2011
First Named Inventor:	Roy E. McAlister, P.E.		
Title of the Invention:	THERMAL TRANSFER DEVICE AND ASSOCIATED SYSTEMS AND METHODS		

THIS REQUEST FOR PARTICIPATION IN THE PCT-PPH PILOT PROGRAM ALONG WITH THE REQUIRED DOCUMENTS MUST BE SUBMITTED VIA EFS-WEB. INFORMATION REGARDING EFS-WEB IS AVAILABLE AT HTTP://WWW.USPTO.GOV/EBC/EFS_HELP.HTML.

APPLICANT HEREBY REQUESTS PARTICIPATION IN THE PCT-PPH PROGRAM AND PETITIONS TO MAKE THE ABOVE-IDENTIFIED APPLICATION SPECIAL UNDER THE PCT-PPH PROGRAM.

The above-identified application is (1) a national stage entry of the corresponding PCT application, or (2) a national stage entry of another PCT application which claims priority to the corresponding PCT application, or (3) a national application that claims domestic/ foreign priority to the corresponding PCT application, or (4) a national application which forms the basis for the priority claim in the corresponding PCT application, or (5) a continuing application of a U.S. application that satisfies one of (1) to (4) above, or (6) a U.S. application that claims domestic benefit to a U.S. provisional application which forms the basis for the priority claim in the corresponding PCT application.

The corresponding PCT application number(s) is/are: PCT/US11/24814

The international date of the corresponding PCT application(s) is/are: February 14, 2011

I. **List of Required Documents:**

a. **A copy of the latest international work product (WO/ISA, WO/IPEA, or IPER) in the above-identified corresponding PCT application(s).**

[x] Is attached.

[ ] Is not attached because the document is already in the U.S. application.

b. **A copy of all claims which were indicated as having novelty, inventive step and industrial applicability in the above-identified corresponding PCT appliction(s).**

[x] Is attached.

[ ] Is not attached because the document is already in the U.S. application.

c. **English translations of the documents in a. and b. above are attached (if the documents are not in the English language). A statement that the English translation is accurate is attached for the document in b. above.**

Under the Paperwork Reduction Act of 1995, no persons are required to respond to a collection of information unless it displays a valid OMB control number.

REQUEST FOR PARTICIPATION IN THE PCT-PPH PILOT PROGRAM BETWEEN THE KIPO AND THE USPTO
(continued)

Application No.:	13/027,244-Conf. #6471
First Named Inventor:	Roy E. McAlister, P.E.

d. **(1) An information disclosure statement listing the documents cited in the international work products (ISR, WO/ISA, WO/IPEA, IPER) of the corresponding PCT application.**

[x] Is attached.

[ ] Has already been filed in the above-identified U.S. application on _____

(2) Copies of all documents (except) for U.S. patents or U.S. patent application publications)

[x] Are attached.

[ ] Have already been filed in the above-identified U.S. application on _____

II. Claims Correspondence Table:

Claims in US Application	Patentable Claims in the corresponding PCT Application	Explanation regarding the correspondence
1-11, 13-18, 40, 41	1-11, 13-18, 40, 41	The claims pending in the US application are identical to their corresponding claims in the PCT Application.

III. All the claims in the US application sufficiently correspond to the patentable claims in the corresponding PCT application.

Signature		Date	Jan. 30, 2012
Name (Print/Typed)	John M. Wechkin	Registration Number	42,216

PCT/US2011/024814

PATENT COOPERATION TREATY

69545-8604.WO00
JMW/NK

From the INTERNATIONAL SEARCHING AUTHORITY

To:

BETCHER SUSAN D.

PERKINS COIE LLP P.O BOX 1247 SEATTLE WA 98111-1247 USA

DOCKETED TO CPI
12-25-11
1-25-12
RCB

RECEIVED
PATENT DOCKETING
OCT 31 2011
PERKINS COIE LLP

- [x] Deadline
- [ ] Follow up
- [ ] Previously
- [ ] Abandoned
- [ ] Transferred
- [ ] Dedocketed

PCT

NOTIFICATION OF TRANSMITTAL OF THE INTERNATIONAL SEARCH REPORT AND THE WRITTEN OPINION OF THE INTERNATIONAL SEARCHING AUTHORITY, OR THE DECLARATION

(PCT Rule 44.1)

	Date of mailing *(day/month/year)* 25 OCTOBER 2011 (25.10.2011)
Applicant's or agent's file reference 695458604WO	**FOR FURTHER ACTION** See paragraphs 1 and 4 below
International application No. **PCT/US2011/024814**	International filing date *(day/month/year)* **14 FEBRUARY 2011 (14.02.2011)**
Applicant **MACALISTER ROY EDWARD**	

1. [x] The applicant is hereby notified that the international search report and the written opinion of the International Searching Authority have been established and are transmitted herewith.

Filing of amendments and statement under Article 19:

The applicant is entitled, if he so wishes, to amend the claims of the international application (see Rule 46):

When? The time limit for filing such amendments is normally two months from the date of transmittal of the international search report.

Where? Directly to the International Bureau of WIPO, 34 chemin des Colombettes 1211 Geneva 20, Switzerland, Facsimile No.: +41 22 338 82 70

For more detailed instructions, see *PCT Applicant's Guide*, International Phase, paragraphs 9.004 , 9.011.

2. [ ] The applicant is hereby notified that no international search report will be established and that the declaration under Article 17(2)(a) to that effect and the written opinion of the International Searching Authority are transmitted herewith.

3. [ ] **With regard to any protest** against payment of (an) additional fee(s) under Rule 40.2, the applicant is notified that:

[ ] the protest together with the decision thereon has been transmitted to the International Bureau together with any request to forward the texts of both the protest and the decision thereon to the designated Offices.

[ ] no decision has been made yet on the protest; the applicant will be notified as soon as a decision is made

4. **Reminders**

The applicant may submit comments on an informal basis on the written opinion of the International Searching Authority to the International Bureau. The International Bureau will send a copy of such comments to all designated Offices unless an international preliminary examination report has been or is to be established. Following the expiration of 30 months from the priority date, these comments will also be made available to the public.

Shortly after the expiration of **18 months** from the priority date, the international application will be published by the International Bureau. If the applicant wishes to avoid or postpone publication, a notice of withdrawal of the international application, or of the priority claim, must reach the International Bureau before the completion of the technical preparations for international publication (Rules 90bis.1 and 90bis.3).

Within **19 months** from the priority date, but only in respect of some designated Offices, a demand for international preliminary examination must be filed if the applicant wishes to postpone the entry into the national phase **until 30 months** from the priority date (in some Offices even later); otherwise, the applicant must, **within 20 months** from the priority date, perform the prescribed acts for entry into the national phase before those designated Offices.

In respect of other designated Offices, the time limit of **30 months** (or later) will apply even if no demand is filed within 19months.

For details about the applicable time limits, Office by Office, see www.wipo.int/pct/en/texts/time_limits.html and the PCT Applicant's Guide, National Chapters.

Name and mailing address of the ISA/KR Korean Intellectual Property Office Government Complex-Daejeon, 189 Cheongsa-ro, Seo-gu, Daejeon 302-701, Republic of Korea Facsimile No. 82-42-472-7140	Authorized officer COMMISSIONER Telephone No. 82-42-481-8754

Form PCT/ISA/220 (July 2010)

* Attention

Copies of the documents cited in the international search report can be searched in the following Korean Intellectual Property Office English website for three months from the date of mailing of the international search report.

http://www.kipo.go.kr/en/ => PCT Services => PCT Services

ID : PCT international application number
PW : **D53PWTVD**

Inquiries related to PCT International Search Report or Written Opinion prepared by KIPO as an International Searching Authority can be answered not only by KIPO but also through IPKC (Intellectual Property Korea Center), located in Vienna, VA, which functions as a PCT Help Desk for PCT applicants.

Homepage: http://www.ipkcenter.com
Email: ipkc@ipkcenter.com
Phone: +1 703 388 1066
Fax: +1 703 388 1084

PATENT COOPERATION TREATY

PCT

INTERNATIONAL SEARCH REPORT

(PCT Article 18 and Rules 43 and 44)

Applicant's or agent's file reference 695458604WO	FOR FURTHER ACTION	see Form PCT/ISA/220 as well as, where applicable, item 5 below.
International application No. **PCT/US2011/024814**	International filing date *(day/month/year)* **14 FEBRUARY 2011 (14.02.2011)**	(Earliest) Priority Date *(day/month/year)* 13 FEBRUARY 2010 (13.02.2010)
Applicant **MACALISTER ROY EDWARD**		

This International search report has been prepared by this International Searching Authority and is transmitted to the applicant according to Article 18. A copy is being transmitted to the International Bureau.

This international search report consists of a total of 3 sheets.

☐ It is also accompanied by a copy of each prior art document cited in this report.

1. **Basis of the report**
   a. With regard to the language, the international search was carried out on the basis of:
      ☒ the international application in the language in which it was filed
      ☐ a translation of the international application into _____, which is the language of a translation furnished for the purposes of international search (Rules 12.3(a) and 23.1(b))
   b. ☐ This international search report has been established taking into account the rectification of an obvious mistake authorized by or notified to this Authority under Rule 91 (Rule 43.6*bis*(a)).
   c. ☐ With regard to any nucleotide and/or amino acid sequence disclosed in the international application, see Box No. I.
2. ☐ Certain claims were found unsearchable (See Box No. II)
3. ☐ Unity of invention is lacking (See Box No. III)
4. With regard to the title,
   ☒ the text is approved as submitted by the applicant.
   ☐ the text has been established by this Authority to read as follows:
5. With regard to the abstract,
   ☒ the text is approved as submitted by the applicant.
   ☐ the text has been established, according to Rule 38.2, by this Authority as it appears in Box No. IV. The applicant may, within one month from the date of mailing of this international search report, submit comments to this Authority.
6. With regard to the drawings,
   a. the figure of the drawings to be published with the abstract is Figure No. 1
      ☒ as suggested by the applicant.
      ☐ as selected by this Authority, because the applicant failed to suggest a figure.
      ☐ as selected by this Authority, because this figure better characterizes the invention.
   b. ☐ none of the figure is to be published with the abstract.

INTERNATIONAL SEARCH REPORT

International application No.
PCT/US2011/024814

A. CLASSIFICATION OF SUBJECT MATTER

F24J 3/08(2006.01)i, F25B 30/06(2006.01)i

According to International Patent Classification (IPC) or to both national classification and IPC

B. FIELDS SEARCHED

Minimum documentation searched (classification system followed by classification symbols)

F24J 3/08; F28F 7/00; F28D 15/00; F28D 21/00

Documentation searched other than minimum documentation to the extent that such documents are included in the fields searched

Korean utility models and applications for utility models
Japanese utility models and applications for utility models

Electronic data base consulted during the international search (name of data base and, where practicable, search terms used)

eKOMPASS(KIPO internal) & Keywords: thermal, transfer, cap

C. DOCUMENTS CONSIDERED TO BE RELEVANT

Category*	Citation of document, with indication, where appropriate, of the relevant passages	Relevant to claim No.
A	US 2003-0183372 A1 (CHENG-TIEN LAI et al.) 02 October 2003 See abstract and figs.2-4	1-53
A	US 2005-0019234 A1 (LUO CHIN-KUANG) 27 January 2005 See abstract and figs.4-6	1-53
A	US 2005-0061486 A1 (HONGWU YANG) 24 March 2005 See abstract and fig.1	1-53
A	US 2005-0230085 A1 (JAVIER VALENZUELA) 20 October 2005 See abstract and fig.2	1-53

☐ Further documents are listed in the continuation of Box C. ☒ See patent family annex.

* Special categories of cited documents:
"A" document defining the general state of the art which is not considered to be of particular relevance
"E" earlier application or patent but published on or after the international filing date
"L" document which may throw doubts on priority claim(s) or which is cited to establish the publication date of citation or other special reason (as specified)
"O" document referring to an oral disclosure, use, exhibition or other means
"P" document published prior to the international filing date but later than the priority date claimed
"T" later document published after the international filing date or priority date and not in conflict with the application but cited to understand the principle or theory underlying the invention
"X" document of particular relevance; the claimed invention cannot be considered novel or cannot be considered to involve an inventive step when the document is taken alone
"Y" document of particular relevance; the claimed invention cannot be considered to involve an inventive step when the document is combined with one or more other such documents,such combination being obvious to a person skilled in the art
"&" document member of the same patent family

Date of the actual completion of the international search	Date of mailing of the international search report
25 OCTOBER 2011 (25.10.2011)	**25 OCTOBER 2011 (25.10.2011)**
Name and mailing address of the ISA/KR Korean Intellectual Property Office Government Complex-Daejeon, 189 Cheongsa-ro, Seo-gu, Daejeon 302-701, Republic of Korea Facsimile No. 82-42-472-7140	Authorized officer HA, Jeong Kyun Telephone No. 82-42-481-8361

Form PCT/ISA/210 (second sheet) (July 2009)

INTERNATIONAL SEARCH REPORT

Information on patent family members

International application No.
PCT/US2011/024814

Patent document cited in search report	Publication date	Patent family member(s)	Publication date
US 2003-0183372 A1	02.10.2003	TW 506523 U	11.10.2002
		TW 506523 Y	11.10.2002
		US 2006-0201656 A1	14.09.2006
		US 7484553 B2	03.02.2009
		US 7543630 B2	09.06.2009
US 2005-0019234 A1	27.01.2005	TW 577969 A	01.03.2004
		TW 577969 B	01.03.2004
		US 7051794 B2	30.05.2006
US 2005-0061486 A1	24.03.2005	AU 2003-211804 A1	24.07.2003
		AU 2009-202386 A1	09.07.2009
		AU 2009-202386 A8	10.09.2009
		BR 0306844 A	03.11.2004
		CA 2474621 A1	17.07.2003
		CN 1195196 C	30.03.2005
		CN 1240987 C0	08.02.2006
		CN 1431452 A	23.07.2003
		CN 1592840 A	09.03.2005
		CN 1592840 C0	08.02.2006
		EP 1475595 A1	10.11.2004
		EP 1475595 A4	18.06.2008
		JP 03-124118 U	19.07.2006
		JP 3124118 U	10.08.2006
		KR 10-0915619 B1	07.09.2009
		RU 2004124253 A	27.10.2005
		RU 2388981 C2	10.05.2010
		WO 03-058144 A1	17.07.2003
		WO 0305-8144A1	17.07.2003
US 2005-0230085 A1	20.10.2005	AU 2003-217757 A1	09.09.2003
		CN 1639532 C0	13.07.2005
		EP 1488182 A1	22.12.2004
		EP 1488182 A4	05.09.2007
		EP 1859219 A2	28.11.2007
		JP 04-195392 B2	10.12.2008
		JP 2005-518518 A	23.06.2005
		KR 10-2004-0088554 A	16.10.2004
		US 2003-0159809 A1	28.08.2003
		US 6863117 B2	08.03.2005
		US 7775261 B2	17.08.2010
		WO 03-073032 A1	04.09.2003
		WO 2006-107492 A2	12.10.2006
		WO 2006-107492 A3	12.10.2006

PATENT COOPERATION TREATY

From the
INTERNATIONAL SEARCHING AUTHORITY

To:
BETCHER SUSAN D.

PERKINS COIE LLP P.O BOX 1247 SEATTLE WA 98111-1247 USA

PCT

WRITTEN OPINION OF THE INTERNATIONAL SEARCHING AUTHORITY

(PCT Rule 43bis.1)

Date of mailing *(day/month/year)*	**25 OCTOBER 2011 (25.10.2011)**
Applicant's or agent's file reference 695458604WO	**FOR FURTHER ACTION** See paragraph 2 below

International application No.	International filing date *(day/month/year)*	Priority date *(day/month/year)*
PCT/US2011/024814	**14 FEBRUARY 2011 (14.02.2011)**	13 FEBRUARY 2010 (13.02.2010)

International Patent Classification (IPC) or both national classification and IPC

F24J 3/08(2006.01)i, F25B 30/06(2006.01)i

Applicant

MACALISTER ROY EDWARD

1. This opinion contains indications relating to the following items:

- [x] Box No. I Basis of the opinion
- [ ] Box No. II Priority
- [ ] Box No. III Non-establishment of opinion with regard to novelty, inventive step and industrial applicability
- [ ] Box No. IV Lack of unity of invention
- [x] Box No. V Reasoned statement under Rule 43bis.1(a)(i) with regard to novelty, inventive step or industrial applicability; citations and explanations supporting such statement
- [ ] Box No. VI Certain documents cited
- [ ] Box No. VII Certain defects in the international application
- [ ] Box No. VIII Certain observations on the international application

2. **FURTHER ACTION**

If a demand for international preliminary examination is made, this opinion will be considered to be a written opinion of the International Preliminary Examining Authority ("IPEA") except that this does not apply where the applicant chooses an Authority other than this one to be the IPEA and the chosen IPEA has notified the International Bureau under Rule 66.1bis(b) that written opinions of this International Searching Authority will not be so considered.

If this opinion is, as provided above, considered to be a written opinion of the IPEA, the applicant is invited to submit to the IPEA a written reply together, where appropriate, with amendments, before the expiration of 3 months from the date of mailing of Form PCT/ISA/220 or before the expiration of 22 months from the priority date, whichever expires later.
For further options, see Form PCT/ISA/220.

Name and mailing address of the ISA/KR	Date of completion of this opinion	Authorized officer
Korean Intellectual Property Office Government Complex-Daejeon, 189 Cheongsa-ro, Seo-gu, Daejeon 302-701, Republic of Korea Facsimile No. 82-42-472-7140	25 OCTOBER 2011 (25.10.2011)	HA, Jeong Kyun Telephone No.82-42-481-8361

WRITTEN OPINION OF THE INTERNATIONAL SEARCHING AUTHORITY

International application No.
PCT/US2011/024814

Box No. I Basis of this opinion

1. With regard to the **language**, this opinion has been established on the basis of:

   ☒ the international application in the language in which it was filed

   ☐ a translation of the international application into _____, which is the language of a translation furnished for the purposes of international search (Rules 12.3(a) and 23.1(b))

2. ☐ This opinion has been established taking into account the **rectification of an obvious mistake** authorized by or notified to this Authority under Rule 91 (Rule 43*bis*.1(a))

3. With regard to any **nucleotide and/or amino acid sequence** disclosed in the international application, this opinion has been established on the basis of:

   a. a sequence listing filed or furnished
      ☐ on paper
      ☐ in electronic form

   b. time of filing or furnishing
      ☐ contained in the international application as filed.
      ☐ filed together with the international application in electronic form.
      ☐ furnished subsequently to this Authority for the purposes of search.

4. ☐ In addition, in the case that more than one version or copy of a sequence listing has been filed or furnished, the required statements that the information in the subsequent or additioanl copies is identical to that in the application as filed or does not go beyond the application as filed, as appropriate, were furnished.

5. Additional comments:

WRITTEN OPINION OF THE INTERNATIONAL SEARCHING AUTHORITY

International application No.
PCT/US2011/024814

Box No. V Reasoned statement under Rule 43bis.1(a)(i) with regard to novelty, inventive step or industrial applicability; citations and explanations supporting such statement

1. Statement

Novelty (N)	Claims	1-53	YES
	Claims	NONE	NO
Inventive step (IS)	Claims	1-53	YES
	Claims	NONE	NO
Industrial applicability (IA)	Claims	1-53	YES
	Claims	NONE	NO

2. Citations and explanations :

Reference is made to the following documents:

D1: US 2003-0183372 A1 (CHENG-TIEN LAI et al.) 02 October 2003
D2: US 2005-0019234 A1 (LUO CHIN-KUANG) 27 January 2005
D3: US 2005-0061486 A1 (HONGWU YANG) 24 March 2005
D4: US 2005-0230085 A1 (JAVIER VALENZUELA) 20 October 2005

2-1. Novelty and Inventive Step

(1) Claims 1-27, 40-48

Claims 1, 18 relate to a thermal transfer system, comprising conduit, input portion, output portion, sidewall, working fluid, end cap, and architectural construct including multiple layers oriented generally parallel to one another, wherein individual layers comprise a synthetic matrix characterization of a crystal.

Claim 40 relates to a thermal transfer system, comprising input portion, output portion, sidewall, working fluid, thermal accumulator, and reservoir in fluid communication with the input portion.

None of the documents disclose the features such as architectural construct including multiple layers oriented generally parallel to one another, wherein individual layers comprise a synthetic matrix characterization of a crystal, and reservoir in fluid communication with the input portion. In addition, these features of the present invention are not rendered obvious by the prior art. Therefore, the subject matter of claim 1, 18, 40, appears to be novel and to involve an inventive step in the sense of Article 33(2) and (3) PCT.

Since dependent claims 2-17, 19-27, 41-48 have additional features as well as the features of claim 1, 18, 40, claims 2-17, 19-27, 41-48 also meet the requirements of PCT Article 33(2)-(3) with respect to novelty and inventive step.

(2) Claims 28-39, 49-53

Claim 28 relates to a method of transferring heat, comprising absorbing heat with first end cap at input portion, changing the working fluid, advancing the vapor phase, returning the liquid phase, directing heat from a second end cap at the output portion, at least one of the first end cap, the second end cap, and the conduit including an architectural construct including multiple layers oriented generally parallel to one another, wherein individual layers comprise a synthetic matrix characterization of a crystal.

Claim 49 relates to a a method of transferring heat, comprising storing a working fluid in a liquid reservoir, absorbing heat with thermal accumulator, directing the working fluid from the liquid reservoir into the vaporization region, advancing the vapor phase, absorbing heat with end cap, directing heat, and driving the liquid phase.

Continued on Supplemental Box

Supplemental Box

In case the space in any of the preceding boxes is not sufficient.
Continuation of:

Box V

None of the documents disclose the features such as directing heat from a second end cap at the output portion, at least one of the first end cap, the second end cap, and the conduit including an architectural construct including multiple layers oriented generally parallel to one another, wherein individual layers comprise a synthetic matrix characterization of a crystal, and storing a working fluid in a liquid reservoir. In addition, these features of the present invention are not rendered obvious by the prior art. Therefore, the subject matter of claim 28, 49 appears to be novel and to involve an inventive step in the sense of PCT Article 33(2) and (3).

Since dependent claims 29-39, 50-53 have additional features as well as the features of claims 28, 49, claims 29-39, 50-53 also meet the requirements of PCT Article 33(2)-(3) with respect to novelty and inventive step.

2. Industrial Applicability

The subject matters of claims 1-53 appear to be industrially applicable in the sense of PCT Article 33(4).

(12) INTERNATIONAL APPLICATION PUBLISHED UNDER THE PATENT COOPERATION TREATY (PCT)

(19) World Intellectual Property Organization
International Bureau

(43) International Publication Date
18 August 2011 (18.08.2011)

PCT

(10) International Publication Number
WO 2011/100731 A2

(51) International Patent Classification:
F24J 3/08 (2006.01) *F25B 30/06* (2006.01)

(21) International Application Number:
PCT/US2011/024814

(22) International Filing Date:
14 February 2011 (14.02.2011)

(25) Filing Language: English

(26) Publication Language: English

(30) Priority Data:

61/304,403	13 February 2010 (13.02.2010)	US
12/857,546	16 August 2010 (16.08.2010)	US
12/857,228	16 August 2010 (16.08.2010)	US

(72) Inventor; and
(71) Applicant : **MCALISTER, Roy Edward** [US/US]; 2350 W. Shangri La, Phoenix, AZ 85029 (US).

(74) Agents: **BETCHER, Susan D.** et al.; Perkins Coie LLP, P.O Box 1247, Seattle, WA 98111-1247 (US).

(81) Designated States *(unless otherwise indicated, for every kind of national protection available)*: AE, AG, AL, AM, AO, AT, AU, AZ, BA, BB, BG, BH, BR, BW, BY, BZ, CA, CH, CL, CN, CO, CR, CU, CZ, DE, DK, DM, DO, DZ, EC, EE, EG, ES, FI, GB, GD, GE, GH, GM, GT, HN, HR, HU, ID, IL, IN, IS, JP, KE, KG, KM, KN, KP, KR, KZ, LA, LC, LK, LR, LS, LT, LU, LY, MA, MD, ME, MG, MK, MN, MW, MX, MY, MZ, NA, NG, NI, NO, NZ, OM, PE, PG, PH, PL, PT, RO, RS, RU, SC, SD, SE, SG, SK, SL, SM, ST, SV, SY, TH, TJ, TM, TN, TR, TT, TZ, UA, UG, US, UZ, VC, VN, ZA, ZM, ZW.

(84) Designated States *(unless otherwise indicated, for every kind of regional protection available)*: ARIPO (BW, GH, GM, KE, LR, LS, MW, MZ, NA, SD, SL, SZ, TZ, UG, ZM, ZW), Eurasian (AM, AZ, BY, KG, KZ, MD, RU, TJ, TM), European (AL, AT, BE, BG, CH, CY, CZ, DE, DK, EE, ES, FI, FR, GB, GR, HR, HU, IE, IS, IT, LT, LU, LV, MC, MK, MT, NL, NO, PL, PT, RO, RS, SE, SI, SK, SM, TR), OAPI (BF, BJ, CF, CG, CI, CM, GA, GN, GQ, GW, ML, MR, NE, SN, TD, TG).

Published:

— *without international search report and to be republished upon receipt of that report (Rule 48.2(g))*

(54) Title: THERMAL TRANSFER DEVICE AND ASSOCIATED SYSTEMS AND METHODS

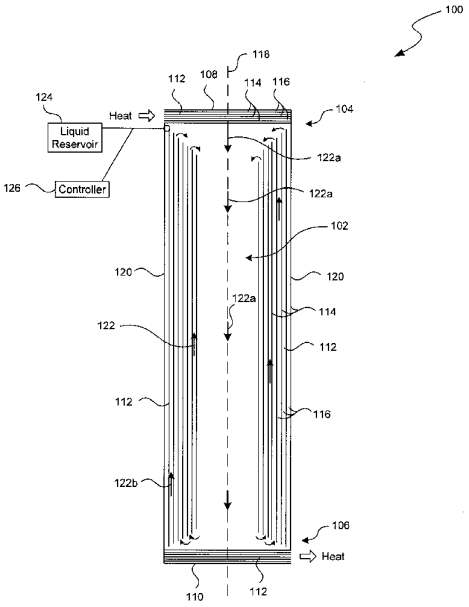

FIG. 1

(57) Abstract: Embodiments of thermal transfer devices and associated systems and methods are disclosed herein. In one embodiment, a thermal transfer system can include a conduit that has an input portion, an output portion, and a sidewall between the input and output portions. Heat can enter the conduit at the input portion and exit the conduit at the output portion. The thermal transfer system can further include an end cap proximate to a terminus of the conduit. A working fluid can circulate through the conduit utilizing a vaporization-condensation cycle. The thermal transfer device can also include an architectural construct having a plurality of parallel layers of a synthetic matrix characterization of a crystal.

WO 2011/100731 A2

THERMAL TRANSFER DEVICE AND ASSOCIATED SYSTEMS AND METHODS

CROSS-REFERENCE TO RELATED APPLICATION(S)

[0001] The present application claims priority to and the benefit of U.S. Patent Application No. 61/304,403, filed on February 13, 2010 and titled FULL SPECTRUM ENERGY AND RESOURCE INDEPENDENCE. The present application is a continuation in part of: U.S. Patent Application No. 12/857,546, filed on August 16, 2010 and titled INCREASING THE EFFICIENCY OF SUPPLEMENTED OCEAN THERMAL ENERGY CONVERSION (SOTEC) SYSTEMS, and U.S. Patent Application No. 12/857,228, filed on August 16, 2010 and titled GAS HYDRATE CONVERSION SYSTEM FOR HARVESTING HYDROCARBON HYDRATE DEPOSITS, each of which claims priority to and the benefit of U.S. Provisional Application No. 61/304,403, filed February 13, 2010 and titled FULL SPECTRUM ENERGY AND RESOURCE INDEPENDENCE. U.S. Patent Application No. 12/857,546 and U.S. Patent Application No. 12/857,228 are also each a continuation-in-part of each of the following applications: U.S. Patent Application No. 12/707,651, filed February 17, 2010 and titled ELECTROLYTIC CELL AND METHOD OF USE THEREOF; PCT Application No. PCT/ US10/24497, filed February 17, 2010 and titled ELECTROLYTIC CELL AND METHOD OF USE THEREOF; U.S. Patent Application No. 12/707,653, filed February 17, 2010 and titled APPARATUS AND METHOD FOR CONTROLLING NUCLEATION DURING ELECTROLYSIS; PCT Application No. PCT/ US10/24498, filed February 17, 2010 and titled APPARATUS AND METHOD FOR CONTROLLING NUCLEATION DURING ELECTROLYSIS; U.S. Patent Application No. 12/707,656, filed February 17, 2010 and titled APPARATUS AND METHOD FOR GAS CAPTURE DURING ELECTROLYSIS; and PCT Application No. PCT/ US10/24499, filed February 17, 2010 and titled APPARATUS AND METHOD FOR CONTROLLING NUCLEATION DURING ELECTROLYSIS; each of which claims priority to and the benefit of the following applications: U.S. Provisional Patent Application No. 61/153,253, filed February 17, 2009 and titled FULL SPECTRUM ENERGY; U.S. Provisional Patent Application No.

61/237,476, filed August 27, 2009 and titled ELECTROLYZER AND ENERGY INDEPENDENCE TECHNOLOGIES; U.S. Provisional Application No. 61/304,403, filed February 13, 2010 and titled FULL SPECTRUM ENERGY AND RESOURCE INDEPENDENCE. Each of these applications is incorporated herein by reference in its entirety.

TECHNICAL FIELD

[0002] The present technology relates generally to thermal transfer devices and associated systems and methods.

BACKGROUND

[0003] Heat pipes transfer heat between a heat source and a heat sink utilizing a liquid-vapor phase change of a working fluid. For example, a working fluid enclosed in a conventional heat pipe contacts and absorbs heat from a hot interface such that it changes to a vapor phase. The vapor pressure drives the vapor phase working fluid through a conduit to a cold interface where the working fluid condenses to a liquid phase. The cold interface absorbs the latent heat from the phase change and removes it from the system. The liquid phase working fluid then returns to the hot interface using capillary action or gravity to continue the vaporization-condensation cycle.

[0004] Heat pipes can generally transport large amounts of heat with relatively small temperature gradients and without mechanical moving parts. Thus, heat pipes can provide efficient heat transfer means. However, non-condensing gases can diffuse through the heat pipe's wall and thereby cause impurities in the working fluid that diminish the heat pipe's efficiency. Additionally, extreme temperatures can cease the vaporization-condensation cycle. For example, extreme heat can prevent the working fluid from condensing, whereas extreme cold can prevent the working fluid from vaporizing. Accordingly, there is a need to improve the efficiency and adaptability of heat pipes and to harness the resultant thermal energy.

BRIEF DESCRIPTION OF THE DRAWINGS

[0005] Figure 1 is a schematic cross-sectional view of a thermal transfer device configured in accordance with an embodiment of the present technology.

[0006] Figures 2A and 2B are schematic cross-sectional views of thermal transfer devices configured in accordance with other embodiments of the present technology.

[0007] Figure 3A is a schematic cross-sectional view of a thermal transfer device operating in a first direction in accordance with a further embodiment of the present technology, and Figure 3B is a schematic cross-sectional view of the thermal transfer device of Figure 3A operating in a second direction opposite the first direction.

[0008] Figures 4A and 4B are schematic plan views of thermal transfer devices configured in accordance with embodiments of the present technology.

[0009] Figure 4C is a schematic cross-sectional view of a thermal transfer device configured in accordance with an additional embodiment of the present technology.

[0010] Figure 5A is a schematic view of a thermal transfer system in a representative environment in accordance with an embodiment of the present technology, and Figure 5B is an enlarged operational view of a portion of the thermal transfer system of Figure 5A.

[0011] Figure 6A is a schematic view of a thermal transfer system in a representative environment in accordance with another embodiment of the present technology, and Figure 6B is an enlarged operational view of a portion of the thermal transfer system of Figure 6A.

[0012] Figure 7A is a schematic view of a thermal transfer system in a representative environment in accordance with yet another embodiment of the present technology, and Figures 7B and 7C are enlarged operational views of portions of the thermal transfer system of Figure 7A.

[0013] Figure 7D is a schematic view of a thermal transfer system in a representative environment in accordance with still another embodiment of the present technology.

[0014] Figure 8 is a schematic view of a thermal transfer system in a representative environment in accordance with a further embodiment of the present technology.

[0015] Figure 9A is a cross-sectional view of a thermal transfer system in a representative environment in accordance with an additional embodiment of the present technology, and Figure 9B is an enlarged view of detail 9B of Figure 9A.

[0016] Figure 10 is a schematic cross-sectional view of a thermal transfer device configured in accordance with a further embodiment of the present technology.

[0017] Figure 11 is a schematic view of a thermal transfer system 1100 shown in a representative environment in accordance with yet another embodiment of the present technology.

DETAILED DESCRIPTION

[0018] The present disclosure describes thermal transfer devices, as well as associated systems, assemblies, components, and methods regarding the same. For example, several of the embodiments described below are directed generally to thermal transfer devices that include a working fluid or combination of working fluids that transfer heat utilizing a vaporization-condensation cycle. As used herein, the term working fluid can include any fluid that actuates the thermal transfer device. In one embodiment, for example, the working fluid is water. In other embodiments, the working fluid can include ammonia, methanol, and/or other suitable working fluids selected based on available fluids and desired outputs of the thermal transfer device. Additionally, several embodiments described below refer to a vaporization-condensation cycle that changes the working fluid between a vapor phase and a liquid phase. As used herein, the term vaporization-condensation cycle is construed broadly to refer to any phase change of the working fluid resulting in a transfer of heat.

[0019] Certain details are set forth in the following description and in Figures 1-11 to provide a thorough understanding of various embodiments of the disclosure. However, other details describing well-known structures and systems often associated with thermal transfer devices and/or other aspects of heating and cooling systems are not set forth below to avoid unnecessarily obscuring the description of various embodiments of the disclosure. Thus, it will be appreciated that several of the details set forth below are provided to describe the following embodiments in a manner sufficient to enable a person skilled in the relevant art to make and use the disclosed embodiments. Several of the details and advantages described below, however, may not be necessary to practice certain embodiments of the disclosure. Many of the details, dimensions, angles, shapes, and other features shown in the Figures are merely illustrative of particular embodiments of the disclosure. Accordingly, other

embodiments can have other details, dimensions, angles, and features without departing from the spirit or scope of the present disclosure. In addition, those of ordinary skill in the art will appreciate that further embodiments of the disclosure can be practiced without several of the details described below.

5 **[0020]** Reference throughout this specification to "one embodiment" or "an embodiment" means that a particular feature, structure, or characteristic described in connection with the embodiment is included in at least one embodiment of the present disclosure. Thus, the occurrences of the phrases "in one embodiment" or "in an embodiment" in various places throughout this specification are not necessarily all 10 referring to the same embodiment. Furthermore, the particular features, structures, or characteristics described with reference to a particular embodiment may be combined in any suitable manner in one or more other embodiments. Moreover, the headings provided herein are for convenience only and do not interpret the scope or meaning of the claimed disclosure.

15 **[0021]** Figure 1 is a schematic cross-sectional view of a thermal transfer device 100 ("device 100") configured in accordance with an embodiment of the present technology. As shown in Figure 1, the device 100 can include a conduit 102 that has an input portion 104, an output portion 106 opposite the input portion 104, and a sidewall 120 between the input and output portions 104 and 106. The device 100 can 20 further include a first end cap 108 at the input portion 104 and a second end cap 110 at the output portion 106. The device 100 can enclose a working fluid 122 (illustrated by arrows) that changes between a vapor phase 122a and a liquid phase 122b during a vaporization-condensation cycle.

[0022] In selected embodiments, the device 100 can also include one or more 25 architectural constructs 112. Architectural constructs 112 are synthetic matrix characterizations of crystals that are primarily comprised of graphene, graphite, boron nitride, and/or another suitable crystal. The configuration and the treatment of these crystals heavily influence the properties that the architectural construct 112 will exhibit when it experiences certain conditions. For example, as explained in further detail 30 below, the device 100 can utilize architectural constructs 112 for their thermal properties, capillary properties, sorbtive properties, catalytic properties, and electromagnetic, optical, and acoustic properties. As shown in Figure 1, the

architectural construct 112 can be arranged as a plurality of substantially parallel layers 114 spaced apart from one another by a gap 116. In various embodiments, the layers 114 can be as thin as one atom. In other embodiments, the thickness of the individual layers 114 can be greater and/or less than one atom and the width of the gaps 116 between the layers 114 can vary. Methods of fabricating and configuring architectural constructs, such as the architectural constructs 112 shown in Figure 1, are described in U.S. Patent Application entitled "ARCHITECTURAL CONSTRUCT HAVING FOR EXAMPLE A PLURALITY OF ARCHITECTURAL CRYSTALS" (Attorney Docket No. 69545-8701US), filed concurrently herewith and incorporated by reference in its entirety.

[0023] As shown in Figure 1, the first end cap 108 can be installed proximate to a heat source (not shown) such that the first end cap 108 serves as a hot interface that vaporizes the working fluid 122. Accordingly, the first end cap 108 can include a material with a high thermal conductivity and/or transmissivity to absorb or deliver heat from the heat source. In the embodiment illustrated in Figure 1, for example, the first end cap 108 includes the architectural construct 112 made from a thermally conductive crystal (e.g., graphene). The architectural construct 112 can be arranged to increase its thermal conductively by configuring the layers 114 to have a high concentration of thermally conductive pathways (e.g., formed by the layers 114) substantially parallel to the influx of heat. For example, in the illustrated embodiment, the layers 114 generally align with the incoming heat flow such that heat enters the architectural construct 112 between the layers 114. This configuration exposes the greatest surface area of the layers 114 to the heat and thereby increases the heat absorbed by the architectural construct 112. Advantageously, despite having a much lower density than metal, the architectural construct 112 can conductively and/or radiatively transfer a greater amount of heat per unit area than solid silver, raw graphite, copper, or aluminum. .

[0024] As further shown in Figure 1, the second end cap 110 can expel heat from the device 100 to a heat sink (not shown) such that the second end cap 110 serves as a cold interface that condenses the working fluid 122. The second end cap 110, like the first end cap 108, can include a material with a high thermal conductivity (e.g., copper, aluminum) and/or transmissivity to absorb and/or transmit latent heat from the working fluid 122. Accordingly, like the first end cap 108, the second end cap 110 can

include the architectural construct 112. However, rather than bringing heat into the device 100 like the first end cap 108, the second end cap 110 can convey latent heat out of the device 100. In various embodiments, the architectural constructs 112 of the first and second end caps 108 and 110 can be made from the similar materials and/or arranged to have substantially similar thermal conductivities. In other embodiments, the architectural constructs 112 can include different materials, can be arranged in differing directions, and/or otherwise configured to provide differing thermal conveyance capabilities including desired conductivities and transmissivities. In further embodiments, neither the first end cap 108 nor the second end cap 110 includes the architectural construct 112.

[0025] In selected embodiments, the first end cap 108 and/or the second end cap 110 can include portions with varying thermal conductivities. For example, a portion of the first end cap 108 proximate to the conduit 102 can include a highly thermally conductive material (e.g., the architectural construct 112 configured to promote thermal conductivity, copper, etc.) such that it absorbs heat from the heat source and vaporizes the working fluid 122. Another portion of the first end cap 108 spaced apart from the conduit 102 can include a less thermally conductive material to insulate the high conductivity portion. In certain embodiments, for example, the insulative portion can include ceramic fibers, sealed dead air space, and/or other materials or structures with high radiant absorptivities and/or low thermal conductivities. In other embodiments, the insulative portion of the first end cap 108 can include the architectural construct 112 arranged to include a low concentration of thermally conductive pathways (e.g., the layers 114 are spaced apart by large gaps 116) such that it has a low availability for conductively transferring heat.

[0026] In other embodiments, the configurations of the architectural constructs 112 may vary from those shown in Figure 1 based on the dimensions of the device 100, the temperature differential between the heat source and the heat sink, the desired heat transfer, the working fluid 122, and/or other suitable thermal transfer characteristics. For example, architectural constructs 112 having smaller surface areas may be suited for microscopic applications of the device 100 and/or high temperature differentials, whereas architectural constructs 112 having higher surface areas may be better suited for macroscopic applications of the device 100 and/or higher rates of heat transfer.

The thermal conductivities of the architectural constructs 112 can also be altered by coating the layers 114 with dark colored coatings to increase heat absorption and with light colored coatings to reflect heat away and thereby decrease heat absorption.

[0027] Referring still to Figure 1, the device 100 can return the liquid phase 122b of the working fluid 122 to the input portion 104 by capillary action. The sidewall 120 of the conduit 102 can thus include a wick structure that exerts a capillary pressure on the liquid phase 122b to drive it toward a desired location (e.g., the input portion 104). For example, the sidewall 120 can include cellulose, ceramic wicking materials, sintered or glued metal powder, nanofibers, and/or other suitable wick structures or materials that provide capillary action.

[0028] In the embodiment shown in Figure 1, the architectural construct 112 is aligned with the longitudinal axis 118 of the conduit 102 and configured to exert the necessary capillary pressure to direct the liquid phase 122b of the working fluid 122 to the input portion 104. The composition, dopants, spacing, and/or thicknesses of the layers 114 can be selected based on the surface tension required to provide capillary action for the working fluid 122. Advantageously, the architectural construct 112 can apply sufficient capillary pressure on the liquid phase 122b to drive the working fluid 122 short and long distances (e.g., millimeters to kilometers). Additionally, in selected embodiments, the surface tension of the layers 114 can be manipulated such that the architectural construct 112 rejects a preselected fluid. For example, the architectural construct 112 can be configured to have a surface tension that rejects any liquid other than the liquid phase 122b of the working fluid 122. In such an embodiment, the architectural construct 112 can function as a filter that prevents any fluid other than the working fluid 122 (e.g., fluids tainted by impurities that diffused into the conduit 102) from interfering with the vaporization-condensation cycle.

[0029] In other embodiments, the selective capillary action of the architectural construct 112 separates substances at far lower temperatures than conventional distillation technologies. The faster separation of substances by the architectural construct 112 can reduce or eliminates substance degradation caused if the substance reaches higher temperatures within the device 100. For example, a potentially harmful substance can be removed from the working fluid 122 by the selective capillary action

of the architectural construct 112 before the working fluid 122 reaches the higher temperatures proximate to the input portion 104.

[0030] The conduit 102 and the first and second end caps 108 and 110 can be sealed together using suitable fasteners able to withstand the temperature differentials of the device 100. In other embodiments, the device 100 is formed integrally. For example, the device 100 can be molded using one or more materials. A vacuum can be used to remove any air within the conduit 102, and then the conduit 102 can be filled with a small volume of the working fluid 122 chosen to match the operating temperatures.

[0031] In operation, the device 100 utilizes a vaporization-condensation cycle of the working fluid 122 to transfer heat. More specifically, the first end cap 108 can absorb heat from the heat source, and the working fluid 122 can in turn absorb the heat from the first end cap 108 to produce the vapor phase 122a. The pressure differential caused by the phase change of the working fluid 122 can drive the vapor phase 122a of the working fluid 122 to fill the space available and thus deliver the working fluid 122 through the conduit 102 to the output portion 104. At the output portion 104, the second end cap 110 can absorb heat from the working fluid 122 to change the working fluid 122 to the liquid phase 122b. The latent heat from the condensation of the working fluid 122 can be transferred out of the device 100 via the second end cap 110. In general, the heat influx to the first end cap 108 substantially equals the heat removed by the second end cap 110. As further shown in Figure 1, capillary action provided by the architectural construct 112 or other wick structure can return the liquid phase 122b of the working fluid 122 to the input portion 104. In selected embodiments, the termini of the layers 114 can be staggered or angled toward the conduit 102 to facilitate entry of the liquid phase 122b between the layers 114 and/or to facilitate conversion of the liquid phase 122b to the vapor phase 122b at the input portion 104. At the input portion 104, the working fluid 122 can again vaporize and continue to circulate through the conduit 102 by means of the vaporization-condensation cycle.

[0032] The device 100 can also operate the vaporization-condensation cycle described above in the reverse direction. For example, when the heat source and heat sink are reversed, the first end cap 108 can serve as the cold interface and the second end cap 110 can serve as the hot interface. Accordingly, the input and output portions

104 and 106 are inverted such that the working fluid 122 vaporizes proximate to the second end cap 110, condenses proximate to the first end cap 108, and returns to the second end cap 110 using the capillary action provided by the sidewall 120. The reversibility of the device 100 allows the device 100 to be installed irrespective of the positions of the heat source and heat sink. Additionally, the device 100 can accommodate environments in which the locations of the heat source and the heat sink may reverse. For example, as described further below, the device 100 can operate in one direction during the summer to utilize solar energy and the device 100 can reverse direction during the winter to utilize heat stored during the previous summer.

[0033] Embodiments of the device 100 including the architectural construct 112 at the first end cap 108 and/or second end cap 110 have higher thermal conductivity per unit area than conventional conductors. This increased thermal conductivity can increase process rate and the temperature differential between the first and second end caps 108 and 110 to produce greater and more efficient heat transfer. Additionally, embodiments including the architectural construct 112 at the first and/or second end caps 108 and 110 require less surface area to absorb the heat necessary to effectuate the vaporization-condensation cycle. Thus, the device 100 can be more compact than a conventional heat pipe that transfers an equivalent amount of heat and provide considerable cost reduction.

[0034] Referring still to Figure 1, in various embodiments, the device 100 can further include a liquid reservoir 124 in fluid communication with the conduit 102 such that the liquid reservoir 124 can collect and store at least a portion of the working fluid 122. As shown in Figure 1, the liquid reservoir 124 can be coupled to the input portion 104 of the conduit 102 via a pipe or other suitable tubular shaped structure. The liquid phase 122b can thus flow from the sidewall 102 (e.g., the architectural construct 112, wick structure, etc.) into the liquid reservoir 124. In other embodiments, the liquid reservoir 124 is in fluid communication with another portion of the conduit 102 (e.g., the output portion 106) such that the liquid reservoir 124 collects the working fluid 122 in the vapor phase 122a or in mixed phases.

[0035] The liquid reservoir 124 allows the device 100 to operate in at least two modes: a heat accumulation mode and a heat transfer mode. During the heat accumulation mode, the vaporization-condensation cycle of the working fluid 122 can

be slowed or halted by funneling the working fluid 122 from the conduit 102 to the liquid reservoir 124. The first end cap 108 can then function as a thermal accumulator that absorbs heat without the vaporization-condensation cycle dissipating the accumulated heat. After the first end cap 108 accumulates a desired amount of heat and/or the heat source (e.g., the sun) no longer supplies heat, the device 100 can change to the heat transfer mode by funneling the working fluid 122 into the conduit 102. The heat stored in first end cap 108 can vaporize the incoming working fluid 122 and the pressure differential can drive the vapor phase 122a toward the output portion 106 of the conduit 102 to restart the vaporization-condensation cycle described above. In certain embodiments, the restart of the vaporization-condensation cycle can be monitored to analyze characteristics (e.g., composition, vapor pressure, latent heat, efficiency) of the working fluid 122.

[0036] As shown in Figure 1, a controller 126 can be operably coupled to the liquid reservoir 124 to modulate the rate at which the working fluid 122 enters the conduit 102 and/or adjust the volume of the working fluid 122 flowing into or out of the conduit 102. The controller 126 can thereby change the pressure within the conduit 102 such that the device 100 can operate at varying temperature differentials between the heat source and sink. Thus, the device 100 can provide a constant heat flux despite a degrading heat source (e.g., first end cap 108) or intermittent vaporization-condensation cycles.

[0037] Figures 2A and 2B are schematic cross-sectional views of thermal transfer devices 200 ("devices 200") in accordance with other embodiments of the present technology. Several features of the devices 200 are generally similar to the features of the device 100 shown in Figure 1. For example, each device 200 can include the conduit 102, the sidewall 120, and the first and second end caps 108 and 110. The device 200 also transfers heat from a heat source to a heat sink utilizing a vaporization-condensation cycle of the working fluid 122 generally similar to that described with reference to Figure 1. Additionally, as shown in Figures 2A and 2B, the device 200 can further include the liquid reservoir 124 and the controller 126 such that the device 200 can operate in the heat accumulation mode and the heat transfer mode.

[0038] The devices 200 shown in Figures 2A and 2B can utilize gravity, rather than the capillary action described in Figure 1, to return the liquid phase 122b of the working

fluid 122 to the input portion 104. Thus, as shown in Figures 2A and 2B, the heat inflow is below the heat output such that gravity can drive the liquid phase 122b down the sidewall 120 to the input portion 104. Thus, as shown in Figure 2A, the sidewall 120 need only include an impermeable membrane 228, rather than a wick structure necessary for capillary action, to seal the working fluid 122 within the conduit 102. The impermeable membrane 228 can be made from a polymer such as polyethylene, a metal or metal alloy such as copper and stainless steel, and/or other suitable impermeable materials. In other embodiments, the devices 200 can utilize other sources of acceleration (e.g., centrifugal force, capillary action) to return the liquid phase 122b to the input portion 104 such that the positions of the input and output portions 104 and 106 are not gravitationally dependent.

[0039] As shown in Figure 2B, in other embodiments, the sidewall 120 can further include the architectural construct 112. For example, the architectural construct 112 can be arranged such that the layers 114 are oriented orthogonal to the longitudinal axis 118 of the conduit 102 to form thermally conductive passageways that transfer heat away from the conduit 102. Thus, as the liquid phase 122b flows along the sidewall 120, the architectural construct 112 can draw heat from the liquid phase 122b, along the layers 114, and away from the sidewall 120 of the device 200. This can increase the temperature differential between the input and output portions 104 and 106 to increase the rate of heat transfer and/or facilitate the vaporization-condensation cycle when the temperature gradient would otherwise be insufficient. In other embodiments, the layers 114 can be oriented at a different angle with respect to the longitudinal axis 118 to transfer heat in a different direction. In certain embodiments, the architectural construct 112 can be positioned radially outward of the impermeable membrane 228. In other embodiments, the impermeable membrane 228 can be radially outward of architectural construct 112 or the architectural construct 112 itself can provide a sufficiently impervious wall to seal the working fluid 122 within the conduit 102.

[0040] The first and second end caps 108 and 110 shown in Figures 2A and 2B can also include the architectural construct 112. As shown in Figures 2A and 2B, the layers 114 of the architectural constructs 112 are generally aligned with the direction heat input and heat output to provide thermally conductive passageways that efficiently

transfer heat. Additionally, the architectural constructs 112 of the first and/or second end caps 108 and 110 can be configured to apply a capillary pressure for a particular substance entering or exiting the conduit. For example, the composition, spacing, dopants, and/or thicknesses of the layers 114 of the architectural constructs 112 can be modulated to selectively draw a particular substance between the layers 114. In selected embodiments, the architectural construct 112 can include a first zone of layers 114 that are configured for a first substance and a second zone of layers 114 that are configured for a second substance to selectively remove and/or add two or more desired substances from the conduit 102.

[0041] In further embodiments, the second end cap 110 can utilize the sorbtive properties of the architectural constructs 112 to selectively load a desired constituent of the working fluid 122 between the layers 114. The construction of the architectural construct 112 can be manipulated to obtain the requisite surface tension to load almost any element or soluble. For example, the layers 114 can be preloaded with predetermined dopants or materials to adjust the surface tension of adsorption along these surfaces. In certain embodiments, the layers 114 can be preloaded with CO_2 such that the architectural construct 112 can selectively mine CO_2 from the working fluid 122 as heat releases through the second end cap 110. In other embodiments, the layers 114 can be spaced apart from one another by a predetermined distance, include a certain coating, and/or otherwise be arranged to selectively load the desired constituent. In some embodiments, the desired constituent adsorbs onto the surfaces of individual layers 114, while in other embodiments the desired constituent absorbs into zones between the layers 114. In further embodiments, substances can be purposefully fed into the conduit 102 from the input portion 104 (e.g., through the first end cap 108) such that the added substance can combine or react with the working fluid 122 to produce the desired constituent. Thus, the architectural construct 112 at the second end cap 110 can facilitate selective mining of constituents. Additionally, the architectural construct 112 can remove impurities and/or other undesirable solubles that may have entered the conduit 102 and potentially interfere with the efficiency of the device 200.

[0042] Similarly, in selected embodiments, the architectural construct 112 at the first end cap 110 can also selectively load desired compounds and/or elements to

prevent them from ever entering the conduit 102. For example, the architectural construct 112 can filter out paraffins that can impede or otherwise interfere with the heat transfer of the device 200. In other embodiments, the devices 200 can include other filters that may be used to prevent certain materials from entering the conduit 102.

[0043] Moreover, similar to selective loading of compounds and elements, the architectural construct 112 at the first and second end caps 108 and 110 may also be configured to absorb radiant energy of a desired wavelength. For example, the layers 114 can have a certain thickness, composition, spacing to absorb a particular wavelength of radiant energy. In selected embodiments, the architectural construct 112 absorbs radiant energy of a first wavelength and converts it into radiant energy of a second wavelength, retransmitting at least some of the absorbed energy. For example, the layers 114 may be configured to absorb ultraviolet radiation and convert the ultraviolet radiation into infrared radiation.

[0044] Additionally, the layers 114 can also catalyze a reaction by transferring heat to a zone where the reaction is to occur. In other implementations, the layers 114 catalyze a reaction by transferring heat away from a zone where a reaction is to occur. For example, heat may be conductively transferred into the layers 114 (e.g., as discussed in U.S. Patent Application No. 12/857,515, filed August 16, 2010, entitled "APPARATUSES AND METHODS FOR STORING AND/OR FILTERING A SUBSTANCE" which is incorporated by reference herein in its entirety) to supply heat to an endothermic reaction within a support tube of the layers 114. In some implementations, the layers 114 catalyze a reaction by removing a product of the reaction from the zone where the reaction is to occur. For example, the layers 114 may absorb alcohol from a biochemical reaction within a central support tube in which alcohol is a byproduct, thereby expelling the alcohol on outer edges of the layers 114, and prolonging the life of a microbe involved in the biochemical reaction.

[0045] Figure 3A is schematic cross-sectional view of a thermal transfer device 300 ("device 300") operating in a first direction in accordance with a further embodiment of the present technology, and Figure 3B is a schematic cross-sectional view of the device 300 of Figure 3A operating in a second direction opposite the first direction. Several features of the device 300 are generally similar to the features of the devices

100 and 200 shown in Figures 1-2B. For example, the device 300 can include the conduit 102, the first and second end caps 108 and 110, and the architectural construct 112. As shown in Figures 3A and 3B, the sidewall 120 of the device 300 can include two architectural constructs 112: a first architectural construct 112a having layers 114 oriented parallel to the longitudinal axis 118 of the conduit 102 and a second architectural construct 112b radially inward from the first architectural construct 112a and having layers 114 oriented perpendicular to the longitudinal axis 118. The layers 114 of the first architectural construct 112a can perform a capillary action, and the layers 114 of the second architectural construct 112b can form thermally conductive passageways that transfer heat away from the side of the conduit 102 and thereby increase the temperature differential between the input and output portions 104 and 106.

[0046] Similar to the device 100 shown in Figure 1, the device 300 can also operate when the direction of heat flow changes and the input and output portions 104 and 106 are inverted. As shown in Figure 3A, for example, the device 300 can absorb heat at the first end cap 108 to vaporize the working fluid 122 at the input portion 104, transfer the heat via the vapor phase 122a of the working fluid 122 through the conduit 102, and expel heat from the second end cap 110 to condense the working fluid 122 at the output portion 106. As further shown in Figure 3A, the liquid phase 122b of the working fluid 122 can move between the layers 114 of the first architectural construct 112b by capillary action as described above with reference to Figure 1. In other embodiments, the sidewall 120 can include a different capillary structure (e.g., cellulose) that can drive the liquid phase 122b from the output portion 106 to the input portion 104. As shown in Figure 3B, the conditions can be reversed such that heat enters the device 300 proximate to the second end cap 110 and exits the device 300 proximate to the first end cap 108. Advantageously, as discussed above, the dual-direction vapor-condensation cycle of the working fluid 122 accommodates environments in which the locations of the heat source and the heat sink reverse.

[0047] Figures 4A-4C are schematic views of thermal transfer devices 400A-C, respectively, configured in accordance with embodiments of the present technology. Referring to Figures 4A-C together, several features of the devices 400A-C are generally similar to the features of the devices 100, 200, and 300 shown in Figures 1-

3B. For example, the devices 400A-C can include the conduit 102, the first and second end caps 108 and 110, the architectural constructs 112, and the liquid reservoir 124 (reference numbers not shown in Figures 4A and 4B for clarity). The devices 400A-C shown in Figures 4A-C rotate at an angular velocity ω, and thus undergo a centrifugal force. In the embodiments shown in Figures 4A and 4B, the devices 400A-B can be spaced apart from an axis of rotation 430. Referring to Figure 4A, for example, when the heat influx is radially outward from the heat output (i.e., the input portion is radially outward from the output portion), the device 400A can utilize centrifugal force to return the liquid phase 122b of the working fluid 122 radially outward to the input portion 104. When the heat output is radially outward from the heat input, such as the embodiment shown in Figure 4B, the device 400B must utilize a capillary action or another force to overcome the centripetal force and drive the liquid phase 122b radially inward to the input portion.

[0048] As the shown in Figure 4C, in other embodiments, the axis of rotation 430 can be spaced along the length of the device 400C. In the embodiment shown in Figure 4C, heat enters the device 400C at both the first and second end caps 108 and 110, and heat exits the device 400C at the axis of rotation 430. As shown in Figure 4A, this configuration creates a double vaporization-condensation cycle of the working fluid 122. For example, the working fluid 122 moves through the conduit 102 until it reaches the axis of rotation 430. From there, the device 400C expels from the output portion 106 such that the working fluid 122 condenses and returns to the input portion 104 via the centripetal force. In other embodiments, the input portion 104 and the output portion 106 are inverted such that the double vaporization-condensation cycle operates in reverse of that shown in Figure 4C.

[0049] In operation, the devices 400A-C shown in Figures 4A-4C can effectuate heat transfer in rotating environments, such as windmills, wheels, and/or other rotating devices. In certain embodiments, the device 400A-C can be installed in a centrifuge. The working fluid 122 can be plasma, blood, and/or other bodily fluids, and the architectural construct 112 can be included at the second end cap 110 to selectively mine the constituents of bodily fluid to measure the levels of the constituent and/or aid in diagnosis. In other embodiments, the devices 400A-C can utilize other

characteristics of the architectural constructs 112 in conjunction with the rotating environment.

[0050] Figure 5A is a schematic view of a thermal transfer system 500 ("system 500") shown in a representative environment in accordance with an embodiment of the present technology, and Figure 5B is an enlarged operational view of a portion of the system 500 of Figure 5A. The system 500 can include a solar collector 552 proximate to the surface of a body of water, such as the ocean, a movable pickup bell 554 proximate to a gas hydrate deposit 553, and an appendage 556 connecting the solar collector 552 and the bell 554. The appendage 556 can include a thermal transfer device 550 ("device 550") that has generally similar features as the device 100 described above with reference to Figure 1. For example, as shown in Figure 5B, the device 550 can move the vapor phase 122a of the working fluid 122 down the conduit 102 and return the liquid phase 122b via capillary action. In other embodiments, the liquid phase can be returned to the input portion 104 using another suitable method.

[0051] In the embodiment shown in Figure 5A, the device 550 can be utilized to transfer heat from the solar collector 552 to the bell 554 to heat the gas hydrate deposit 553. The heated gas hydrate deposit 553 can release the gas hydrate (e.g., methane hydrate) up a conduit 558 to a methane recovery director 560. Accordingly, the system 500 can harness solar energy, transfer it via the device 550 to the methane hydrate deposit 553, and initiate the release of the methane hydrate. Further operation of such a methane hydrate collection system is described in U.S. Patent Application No. 12/857,228, entitled GAS HYDRATE CONVERSION SYSTEM FOR HARVESTING HYDROCARBON HYDRATE DEPOSITS, filed August 16, 2010, which is herein incorporated by reference in its entirety.

[0052] It is also contemplated that the heating of water that is a product of the decomposition of gas hydrates may be accomplished using a system such as that which is disclosed in U.S. Patent Application No. 12/857,546, filed on August 16, 2010, and entitled INCREASING THE EFFICIENCY OF SUPPLEMENTED OCEAN THERMAL ENERGY CONVERSION (SOTEC) SYSTEMS, which is incorporated by reference in its entirety as if fully set forth herein. In this instance it is optionally intended to evaporate such collected water for further energy conversion and

purification of water inventories first collected in conjunction with decomposition of gas hydrates.

[0053] Figure 6A is a schematic view of a thermal transfer system 600 ("system 600") shown in another representative environment in accordance with an embodiment of the present technology, and Figure 6B is an enlarged operational view of a portion of the system 600 of Figure 6A. The system 600 can include a thermal transfer device 650 ("device 650") that absorbs heat from a geothermal formation 660 and expels heat to a factory, building, or other structure 662. The device 650 can be generally similar to the devices 200 described with reference to Figures 2A and 2B. For example, as shown in Figure 6B, the device 650 can drive the vapor phase 122a of the working fluid 122 up the conduit 102 and return the liquid phase 122b to a hot interface (e.g., the first end cap 108, not shown) via a gravitational force. In operation, the device 650 can capture the thermal energy supplied by the geothermal formation 660 and transfer it to the structure 662 where it can be used to provide heat, electricity, and/or otherwise utilize the thermal energy transferred to the structure 662. In other embodiments, the system 600 can be used to transfer heat away from the structure 662 and/or other formation. For example, the system 600 can be installed such that the structure 662 transmits heat to the device 650 and transfers it to another structure, engine, and/or other location spaced apart from the structure 662. As another example, the system 600 can be installed such that the device 650 transfers heat away from permafrost and into a heat sink not negatively affected by additional heat (e.g., outer space).

[0054] Figure 7A is a schematic view of a thermal transfer system 700 ("system 700") shown in yet another representative environment in accordance with an embodiment of the present technology, and Figures 7B and 7C are enlarged operational views of portions of the system 700 of Figure 7A. The system 700 can include a thermal transfer device 750 ("device 750") that includes features generally similar as the devices 100 and 300 described above with reference to Figures 1, 3A, and 3B such that the device 750 can operate the vaporization-condensation cycle in both directions. For example, as shown in Figure 7B, under a first condition, the device 750 can drive the vapor phase 122a of the working fluid 122 down the conduit 102 and return the liquid phase 122b to the hot interface by capillary action. As shown in Figure 7C, under the second condition the device 750 can drive the vapor phase 122a of the

working fluid 122 in the reverse direction, up the conduit 102 and return the liquid phase 122b to the hot interface using capillary action and/or gravitational force.

[0055] This dual-direction system 700 can be used in environments with reversing or otherwise changing temperature differentials. As shown in Figure 7A, for example, the system 700 can operate under the first condition during warmer seasons to absorb solar energy via a solar collector 766. An aquifer 768 positioned at the output portion 106 of the conduit 102 can function as a natural thermal accumulator that can store the heat transferred to it from the system 700. As seasons change, the system 700 can reverse directions and operate under the second condition to transfer the heat of the aquifer 768 to transfer the stored heat to a factory 767 and/or other structure or device that can utilize the thermal energy. Thus, the dual-directional system 700 provides an efficient way to capture solar energy and store it for a later use (e.g., electricity during the winter). Additionally, in certain embodiments, the portion of the device 750 at the aquifer 768 (e.g., the first or second end caps described above) can include an architectural construct (e.g., the architectural constructs 112 described above) that can use its capillary and/or sorbtive properties to selectively filter toxins from aquifer and thereby rehabilitate a previously hazardous aquifer.

[0056] Figure 7D is a schematic view of the system 700 shown in Figures 7A-7C in another representative environment in accordance with an embodiment of the present technology. As shown in Figure 7D, the device 750 can be installed between a dwelling 780 and an insulated structure 782 in the surface of the ground. The insulated structure 782 can be filled with sand, gravel, rocks, water, and/or other suitable materials that can absorb and store heat. In operation, the system 700 can absorb heat with a solar collector 784, transfer heat to the insulated structure 782 via the device 750, and accumulate the heat in the insulated structure 782. The heat stored in the insulated structure 782 can later be used to provide heat or other forms of energy to the dwelling 780. Accordingly, as discussed above, the dual-direction system 700 provides an efficient way to accumulate heat for later use.

[0057] Figure 8A is an enlarged schematic cross-sectional view of a thermal transfer system 800a ("system 800a") in a representative environment in accordance with a further embodiment of the present technology. The system 800a can include a thermal transfer device 850 ("device 850") that has features generally similar to the devices

described above. For example, as shown in Figure 8A, the device 850 can include the architectural construct 112 with layers 114 arranged orthogonally to the sidewall 120 to transfer heat away from the conduit 102. As shown in Figure 8A, the system 800a can also include one or more external conduits 890 positioned along at least a portion of the device 850. The external conduits 890 can include openings 891 in fluid communication with the environment outside of the device 850. In some embodiments, the conduits 890 can be made from the architectural construct 112 and configured to selectively draw in desired substances from outside the conduit 102. For example, the architectural construct 112 can use capillary action to drive a preselected liquid through the external conduits 890 and/or use sorbtive properties to adsorb a preselected constituent from the liquid. The preselected liquids and/or constituents can be collected in a harvest located along any portion of the external conduits 890 (e.g., proximate to either of the end caps). In other embodiments, the external conduits 890 can be made from other materials (e.g., plastic tubing, wick structures, etc.) to draw in chemicals, minerals, and/or other substances from outside the device 850.

[0058] As shown in Figure 8A, the system 800a can absorb heat from at least two heat sources spaced apart from one another and expels heat toward a single heat sink to generate two vaporization-condensation cycles within the device 850. In the embodiment illustrated in Figure 8A, for example, the device 850 is installed between a solar collector 882 and a submarine geothermal formation 884 and releases heat at a submarine heat sink (e.g., proximate to an ocean floor 886). The system 800a thus includes one vaporization-condensation cycle spaced above the ocean floor 886 and one spaced below the ocean floor 886. Advantageously, the heat outputs from the two vaporization-condensation cycles can combine to generate a greater heat output from the system 800a than either cycle could individually. In selected embodiments, the system 800a can harvest thermal energy released from the device 850 to power turbines, another engine, and/or other suitable devices above or below the water.

[0059] The system 800a can also utilize the increased heat output of the dual vaporization-condensation cycles to release gas hydrates (e.g., methane hydrates) from their present state (i.e., ice crystals) such as described in U.S. Patent Application No. 12/857,228, entitled GAS HYDRATE CONVERSION SYSTEM FOR HARVESTING HYDROCARBON HYDRATE DEPOSITS, filed August 16, 2010. As shown in Figure

8A, for example, the system 800a can be positioned proximate to a deposit 888 of gas hydrates at the ocean floor 886 such that the heat output of the system 800a can increase the local temperature of the deposit 888, melt the gas hydrate ice crystals, and release the gas hydrates. The gas hydrates can be drawn through the external conduits 890 to a harvest where they can be used for fuel, manufacturing materials, and/or other suitable applications. In some embodiments, carbon dioxide can drive the released gas hydrate through the external conduits 890. In other embodiments, the architectural construct 112 can be configured to selectively draw up the gas hydrate using capillary action. In other embodiments, the gas hydrates can be drawn through the external conduits 890 by a pump and/or other suitable liquid driving device.

[0060] Advantageously, the increased heat output of the system 800a can increase the local temperature of the deposit 888 faster and higher than a single vaporization-condensation cycle system to more efficiently harvest the gas hydrates. Additionally, as shown in Figure 8A, the heat transferred outward from the architectural construct 112 positioned at the sidewall 120 of the conduit 102 can transfer additional heat to the deposit 888 to further speed the release of the gas hydrates. The increased heat output of the system 800a can also increase the local temperature of a greater area of the deposit 888. For example, in some embodiments, the system 800a warms several square miles of the deposit 888 at one time. Therefore, the dual vaporization-condensation cycle increases the zone of influence that the system 800a can have over the deposit 888.

[0061] Figure 8B is a schematic view of a thermal transfer system 800b ("system 800b") in a representative environment in accordance with an embodiment of the disclosure. The system 800b can include generally similar features as the system 800a discussed above. For example, the system 800b can include the device 850 and the external conduit 890 configured to draw in desired fluids from the external environment. Additionally, the system 800b can be installed between two heat sources (e.g., the solar collector 882 and the geothermal formation 884) spaced apart from one another and a heat sink (e.g., proximate to the ocean floor 886) therebetween to effectuate two vaporization-condensation cycles that have a combined heat output. Similar to the system 800a described above, the system 800b shown in Figure 8B can transfer heat from the device 850 to a methane hydrate deposit 894. As discussed

above, the dual vaporization-condensation cycle device 850b has a broad zone of influence over the methane deposit 894 such that the system 800b can efficiently harvest methane above and/or below the surface of the water.

[0062] In the embodiment illustrated in Figure 8B, the system 800b further includes a barrier film 896a over the zone of influence of the system 800b and a methane conduit 898 configured to receive methane from beneath the barrier film 896a. The barrier film 896a can be made of a non-pervious film, such as polyethylene, that prevents methane from escaping from the system 800b and releasing dangerous greenhouse gases into the atmosphere. In selected embodiments, the barrier film 896 can be configured to distribute heat released from the device 850 to further increase the zone of influence of the system 800b. As further shown in Figure 8B, the system 800b can also include second barrier film 896b at the surface of the water to further ensure methane does not escape the system 800b. As further shown in Figure 8B, the system 800b can include an optional permeable film 897 that can permit methane to pass through it and block carbon dioxide and water such that only methane flows between the barrier film 896a and the methane permeable film 897 to the methane conduit 898. Accordingly, the methane can flow through the methane conduit 898 where the methane can be harvested for fuel, carbon materials, and/or other suitable purposes. The water and carbon dioxide blocked by the methane permeable layer 897 can flow up the external conduit 890 using lift from the carbon dioxide and/or capillary action. In selected embodiments, the external conduit 890 can be made from an architectural construct loaded with carbon dioxide such that the architectural construct 112 adsorbs carbon dioxide as it travels through the external conduit 890 and only the water is delivered from the external conduit 890. In other embodiments, the system 800b can be installed such that the external conduit 890, rather than the methane conduit 898, draws up the methane hydrate. In other embodiments, the system 800b can be used to harvest another gas hydrate and/or other substance released by heating the ocean floor 886 and/or other geothermal formation.

[0063] In selected embodiments, the system 800b can include an underwater methane harvest that can be used to drive a turbine 895 used to accelerate the flow of the working fluid 122 through the device 850. In other embodiments, the methane can be used to drive other underwater systems. In further embodiments, the system 800

can include a thermal deposit at the heat output of the system 800b to store heat for subsequent methane hydrate collection and/or drive systems above and/or below the surface of the water. For example, the thermal harvest can collect heat released from the system 800b and transport it via conduits to portions of the methane deposit 894 spaced beyond the zone of influence of the system 800b and/or other methane deposits.

[0064] As further shown in Figure 8B, the system 800b can further include an oxygen conduit 899 and an engine 801. The oxygen conduit 899 can drive oxygen from above the water or another oxygen source and deliver it to the engine 801 installed below the barrier layer 896a. The engine 803 can burn the oxygen delivered by the oxygen conduit 899 and the hydrogen produced as the system 800b (i.e., CH_4 + HEAT → C + $2H_2$) to provide hot steam to the methane deposit 894. The additional heat from the engine 803 can liberate additional methane. The engine 801 can be any suitable engine that delivers hot steam, such as a turbine.

[0065] Figure 9A is a cross-sectional view of a thermal transfer system 900 ("system 900") in an additional representative environment in accordance with an embodiment of the present technology, and Figure 9B is an enlarged view of detail 9B of Figure 9A. The system 900 can include a thermal transfer device 950 ("device 950") that includes features generally similar to the devices described above. The system 900 shown in Figures 9A and 9B is installed in a microscopic environment, rather than the macroscopic systems shown in Figures 5A-8B, for use as a sensor or other type of monitor as described in U.S. Patent Application entitled METHODS, DEVICES, AND SYSTEMS FOR DETECTING PROPERTIES OF TARGET SAMPLES (Attorney Docket No. 69545-8801US1), filed February 14, 2011, concurrently herewith and incorporated by reference in its entirety. In other embodiments, the system 900 can be used for other microscopic applications that benefit from heat transfer.

[0066] In the embodiment illustrated in Figures 9A and 9B together, a tube 903 and a fitting 905 are sealed together. For example, the tube 903 and the fitting 905 are sealed together by tightening a nut 907. One or more devices 950 can be positioned between a tube 903 and the fitting 907 to test for incipient leaks of a fluid 909 running through the tube 903. For example, the devices 950 can sense the presence of the fluid 909 and/or the composition of the fluid 909. In selected embodiments, the device

950 can include a sensor positioned within an architectural construct (e.g., the architectural construct 112 described above). The architectural construct can be configured to selectively adsorb a predetermined constituent of the fluid 909 such that the sensor can determine the presence and/or trend in the presence of the predetermined constituent. In other embodiments, the architectural construct can be configured to selectively transfer a target sample of the fluid 909 or a constituent thereof to a reservoir (e.g., the liquid reservoir 124 described above) that includes a sensor to monitor or otherwise test the sample. In further embodiments, the devices 950 can be otherwise positioned to monitor other aspects of the system 900.

[0067] Figure 10 is a schematic view of a thermal transfer device 1000 configured in accordance with a further embodiment of the present technology. The device 1000 can include features and functions generally similar to the devices described above. However, the device 1000 shown in Figure 10 has a different aspect ratio than the devices shown above. More specifically, the first and second end caps 108 and 110 and the sidewall 120 are closer in length such that the device 1000 forms a wide conduit 102. Such an aspect ratio is well suited for transferring heat through a room. For example, the device 1000 can be used for dry cleaning. Garments can be positioned within the conduit 102, and the vapor phase 122a of the working fluid 122 (e.g., CO_2) can capture dirt, oils, and other filth from the garments as it moves through the conduit 102. The filth can be filtered from the device 1000 at the second end cap 110 with the architectural construct 112 and/or another suitable filter. Thus, rather than conventional dry cleaning methods that use toxic chemicals to clean clothes, the heat transfer provided by the device can be utilized to clean clothes. In other embodiments, the device 1000 can be used for other suitable heat transfer methods and/or the aspect ratio of the device 1000 can have other suitable variations.

[0068] Figure 11 is a schematic view of a thermal transfer system 1100 ("system 1100") shown in a representative environment in accordance with yet another embodiment of the present technology. The system 1100 shown in Figure 11 can include a thermal transfer device 1150 ("device 1150") that has features generally similar to the thermal transfer devices described above. For example, the device 1150 can transfer heat utilizing a vaporization-condensation cycle of the working fluid 122 within the conduit 102. As shown in Figure 11, the system 1100 can further include a

solar collector 1121 configured to concentrate heat and deliver it to a first pipe 1123. A pump 1125 can be operably coupled to the first pipe 1123 to drive a fluid (e.g., the working fluid 122) within the first pipe 1123 to a first heat exchanger 1127 proximate to the input portion 104 of the device 1150. The first heat exchanger 127 can heat and vaporize the fluid within the first pipe 1123 and thereby deliver heat to the input portion 104 of the device 1150. As shown in Figure 11, the working fluid 122 can vaporize at the input portion 104 and circulate through the device 1150 to release heat at the output portion 106. The device 1150 can utilize the released heat for domestic water heating, crop drying, and other suitable applications.

[0069] In selected embodiments, the working fluid 122 flows through the first pipe 1121 such that the device 1150 can apply capillary pressure to the working fluid 122 using the architectural construct 112 such that the working fluid 122 is drawn into the conduit 102. In other embodiments, the vaporized fluid emitted by the heat exchanger 1127 can be filtered by the architectural construct 112 to selectively admit one or more desired substances (e.g., chemicals that catalyze with the working fluid 122) into the conduit 102.

[0070] As shown in Figure 11, the system 1100 can further include a second heat source 1129 (i.e., separate from the solar collector 1121) that can be used in conjunction with the solar collector 1121 to increase the heat influx to the device 1150 and/or to replace the solar collector 1121 when solar heating is unavailable or not desired. The second heat source 1129 can be a wind generator as shown in Figure 11, resistive or inductive heating by grid power, and/or other suitable heat transmitting devices. In the embodiment illustrated in Figure 11, the second heat source 1129 is coupled to a second pipe 1133 and a second heat exchanger 1131 that transfer heat to the input portion 104 of the device 1150. In other embodiments, the second heat source 1129 is connected to the first pipe 1121 and the first heat exchanger 1123.

[0071] Additionally, as shown in Figure 11, the system 1100 can further include a supplementary processing portion 1135 positioned proximate to the input portion 104 such that heat is transmitted from the first and/or second heat exchangers 1127 and 1131 to the supplementary processing portion 1135. The supplementary processing portion 1135 can be used to provide additional manufacturing and/or services to the system 1100. For example, the supplementary processing portion 1135 can be used

for drying fruit, dehydrating maple syrup to provide surplus water, and/or removing preselected substances such as flavinoids by the architectural construct 112.

[0072] The present application incorporates by reference in its entirety the subject matter of the following applications: U.S. Patent Application, entitled METHODS AND APPARATUSES FOR DETECTION OF PROPERTIES OF FLUID CONVEYANCE SYSTEMS (Attorney Docket No. 69545-8801US1); U.S. Patent Application, entitled ARCHITECTURAL CONSTRUCT HAVING FOR EXAMPLE A PLURALITY OF ARCHITECTURAL CRYSTALS (Attorney Docket No. 69545-8701US); U.S. Patent Application No. 12/857,546, filed on August 16, 2010, and entitled INCREASING THE EFFICIENCY OF SUPPLEMENTED OCEAN THERMAL ENERGY CONVERSION (SOTEC) SYSTEMS; U.S. Patent Application No. 12/857,228, entitled GAS HYDRATE CONVERSION SYSTEM FOR HARVESTING HYDROCARBON HYDRATE DEPOSITS, filed August 16, 2010, all of which are herein incorporated by reference in their entirety.

[0073] From the foregoing, it will be appreciated that specific embodiments of the disclosure have been described herein for purposes of illustration, but that various modifications may be made without deviating from the spirit and scope of the invention. For example, any of the thermal transfer devices discussed above can have a different aspect ratio (e.g., between the sidewall 120 and the first and second end caps 108 and 110) than those shown in Figures 1-11 to accommodate differing applications. Certain aspects of the new technology described in the context of particular embodiments may be combined or eliminated in other embodiments. For example, the thermal transfer devices shown in Figures 3A-4C and 6A-10 can include the liquid reservoir and/or controller described with reference to Figure 1. Additionally, while advantages associated with certain embodiments of the new technology have been described in the context of those embodiments, other embodiments may also exhibit such advantages, but not all of the embodiments within the scope of the technology necessarily exhibit such advantages. Accordingly, the disclosure and associated technology can encompass other embodiments not expressly shown or described herein. Moreover, unless the context clearly requires otherwise, throughout the description and the claims, the words "comprise," "comprising," and the like are to be construed in an inclusive sense as opposed to an exclusive or exhaustive sense; that is

to say, in a sense of "including, but not limited to." Words using the singular or plural number also include the plural or singular number, respectively. When the claims use the word "or" in reference to a list of two or more items, that word covers all of the following interpretations of the word: any of the items in the list, all of the items in the list, and any combination of the items in the list.

[0074] Features of the various embodiments described above can be combined to provide further embodiments. All of the U.S. patents, U.S. patent application publications, U.S. patent applications, foreign patents, foreign patent applications and non-patent publications referred to in this specification and/or listed in the Application Data Sheet are incorporated herein by reference, in their entirety. Aspects of the disclosure can be modified, if necessary, to employ fuel injectors and ignition devices with various configurations, and concepts of the various patents, applications, and publications to provide yet further embodiments of the disclosure.

[0075] These and other changes can be made to the disclosure in light of the above-detailed description. In general, in the following claims, the terms used should not be construed to limit the disclosure to the specific embodiments disclosed in the specification and the claims, but should be construed to include all systems and methods that operate in accordance with the claims. Accordingly, the invention is not limited by the disclosure, but instead its scope is to be determined broadly by the following claims.

[0076] To the extent not previously incorporated herein by reference, the present application incorporates by reference in their entirety the subject matter of each of the following materials: U.S. Patent Application No. 12/857,553, filed on August 16, 2010 and titled SUSTAINABLE ECONOMIC DEVELOPMENT THROUGH INTEGRATED PRODUCTION OF RENEWABLE ENERGY, MATERIALS RESOURCES, AND NUTRIENT REGIMES; U.S. Patent Application No. 12/857,553, filed on August 16, 2010 and titled SYSTEMS AND METHODS FOR SUSTAINABLE ECONOMIC DEVELOPMENT THROUGH INTEGRATED FULL SPECTRUM PRODUCTION OF RENEWABLE ENERGY; U.S. Patent Application No. 12/857,554, filed on August 16, 2010 and titled SYSTEMS AND METHODS FOR SUSTAINABLE ECONOMIC DEVELOPMENT THROUGH INTEGRATED FULL SPECTRUM PRODUCTION OF RENEWABLE MATERIAL RESOURCES USING SOLAR THERMAL; U.S. Patent

Application No. 12/857,502, filed on August 16, 2010 and titled ENERGY SYSTEM FOR DWELLING SUPPORT; Attorney Docket No. 69545-8505.US00, filed on February 14, 2011 and titled DELIVERY SYSTEMS WITH IN-LINE SELECTIVE EXTRACTION DEVICES AND ASSOCIATED METHODS OF OPERATION; U.S. Patent Application No. 61/401,699, filed on August 16, 2010 and titled COMPREHENSIVE COST MODELING OF AUTOGENOUS SYSTEMS AND PROCESSES FOR THE PRODUCTION OF ENERGY, MATERIAL RESOURCES AND NUTRIENT REGIMES; Attorney Docket No. 69545-8601.US00, filed on February 14, 2011 and titled CHEMICAL PROCESSES AND REACTORS FOR EFFICIENTLY PRODUCING HYDROGEN FUELS AND STRUCTURAL MATERIALS, AND ASSOCIATED SYSTEMS AND METHODS; Attorney Docket No. 69545-8602.US00, filed on February 14, 2011 and titled REACTOR VESSELS WITH TRANSMISSIVE SURFACES FOR PRODUCING HYDROGEN-BASED FUELS AND STRUCTURAL ELEMENTS, AND ASSOCIATED SYSTEMS AND METHODS; Attorney Docket No. 69545-8603.US00, filed on February 14, 2011 and titled CHEMICAL REACTORS WITH RE-RADIATING SURFACES AND ASSOCIATED SYSTEMS AND METHODS; Attorney Docket No. 69545-8605.US00, filed on February 14, 2011 and titled CHEMICAL REACTORS WITH ANNULARLY POSITIONED DELIVERY AND REMOVAL DEVICES, AND ASSOCIATED SYSTEMS AND METHODS; Attorney Docket No. 69545-8606.US00, filed on February 14, 2011 and titled REACTORS FOR CONDUCTING THERMOCHEMICAL PROCESSES WITH SOLAR HEAT INPUT, AND ASSOCIATED SYSTEMS AND METHODS; Attorney Docket No. 69545-8608.US00, filed on February 14, 2011 and titled INDUCTION FOR THERMOCHEMICAL PROCESS, AND ASSOCIATED SYSTEMS AND METHODS; Attorney Docket No. 69545-8611.US00, filed on February 14, 2011 and titled COUPLED THERMOCHEMICAL REACTORS AND ENGINES, AND ASSOCIATED SYSTEMS AND METHODS; U.S. Patent Application No. 61/385,508, filed on September 22, 2010 and titled REDUCING AND HARVESTING DRAG ENERGY ON MOBILE ENGINES USING THERMAL CHEMICAL REGENERATION; Attorney Docket No. 69545-8616.US00, filed on February 14, 2011 and titled REACTOR VESSELS WITH PRESSURE AND HEAT TRANSFER FEATURES FOR PRODUCING HYDROGEN-BASED FUELS AND STRUCTURAL ELEMENTS, AND ASSOCIATED SYSTEMS AND METHODS; Attorney Docket No. 69545-8701.US00, filed on February 14, 2011

and titled ARCHITECTURAL CONSTRUCT HAVING FOR EXAMPLE A PLURALITY OF ARCHITECTURAL CRYSTALS; U.S. Patent Application No. 12/806,634, filed on August 16, 2010 and titled METHODS AND APPARATUSES FOR DETECTION OF PROPERTIES OF FLUID CONVEYANCE SYSTEMS; Attorney Docket No. 69545-8801.US01, filed on February 14, 2011 and titled METHODS, DEVICES, AND SYSTEMS FOR DETECTING PROPERTIES OF TARGET SAMPLES; Attorney Docket No. 69545-9002.US00, filed on February 14, 2011 and titled SYSTEM FOR PROCESSING BIOMASS INTO HYDROCARBONS, ALCOHOL VAPORS, HYDROGEN, CARBON, ETC.; Attorney Docket No. 69545-9004.US00, filed on February 14, 2011 and titled CARBON RECYCLING AND REINVESTMENT USING THERMOCHEMICAL REGENERATION; Attorney Docket No. 69545-9006.US00, filed on February 14, 2011 and titled OXYGENATED FUEL; U.S. Patent Application No. 61/237,419, filed on August 27, 2009 and titled CARBON SEQUESTRATION; U.S. Patent Application No. 61/237,425, filed on August 27, 2009 and titled OXYGENATED FUEL PRODUCTION; Attorney Docket No. 69545-9102.US00, filed on February 14, 2011 and titled MULTI-PURPOSE RENEWABLE FUEL FOR ISOLATING CONTAMINANTS AND STORING ENERGY; U.S. Patent Application No. 61/421,189, filed on December 8, 2010 and titled LIQUID FUELS FROM HYDROGEN, OXIDES OF CARBON, AND/OR NITROGEN; AND PRODUCTION OF CARBON FOR MANUFACTURING DURABLE GOODS; and Attorney Docket No. 69545-9105.US00, filed on February 14, 2011 and titled ENGINEERED FUEL STORAGE, RESPECIATION AND TRANSPORT.

CLAIMS

I/We claim:

1. A thermal transfer system, comprising:

a conduit having an input portion, an output portion opposite the input portion, and a sidewall between the input and output portions, wherein heat enters the conduit at the input portion and heat exits the conduit at the output portion, and wherein a working fluid enclosed in the conduit changes from a liquid phase to a vapor phase proximate to the input portion and from the vapor phase to the liquid phase proximate to the output portion;

an end cap proximate to a terminus of the conduit; and

an architectural construct including a plurality of layers oriented generally parallel to one another, wherein individual layers comprise a synthetic matrix characterization of a crystal.

2. The thermal transfer system of claim 1 wherein the architectural construct comprises at least one of graphene, graphite, and boron nitride.

3. The thermal transfer system of claim 1 wherein:

the sidewall comprises the architectural construct, the layers being substantially parallel to a longitudinal axis of the conduit, and the architectural construct being configured to drive the liquid phase from the output portion to the input portion by capillary action; and

the layers are angled toward the conduit proximate to the input and output portions.

4. The thermal transfer system of claim 1 wherein the sidewall comprises the architectural construct, the layers being approximately perpendicular to a longitudinal axis of the conduit.

5. The thermal transfer system of claim 1 wherein the end cap comprises the architectural construct, and wherein the layers are approximately perpendicular to a longitudinal axis of the conduit.

6. The thermal transfer system of claim 1 wherein the end cap comprises the architectural construct, and wherein the layers are substantially parallel to a longitudinal axis of the conduit.

7. The thermal transfer system of claim 1 wherein:

the end cap is proximate to the output portion, the end cap comprising the architectural construct having layers substantially parallel to a longitudinal axis of the conduit; and

the architectural construct is configured to separate at least one predetermined constituent from the working fluid.

8. The thermal transfer system of claim 7 wherein a solution enters the conduit at the input portion and the predetermined constituent includes a portion of the solution.

9. The thermal transfer system of claim 1 wherein:

the end cap is proximate to the input portion, the end cap comprising the architectural construct having layers substantially parallel to a longitudinal axis of the conduit; and

the architectural construct is configured to prevent at least one predetermined material from entering the conduit via the end cap.

10. The thermal transfer system of claim 1 wherein the end cap is proximate to the input portion, and wherein the end cap comprises the architectural construct having layers substantially parallel to a longitudinal axis of the conduit such that the end cap receives radiant heat having a first wavelength between the layers and the architectural construct re-radiates at least a portion of the radiant heat at a second wavelength different from the first wavelength.

11. The thermal transfer system of claim 1 wherein the end cap is at the input portion and includes the architectural construct, and wherein the system further comprises;

a liquid reservoir proximate in fluid communication with the input portion of the conduit;

a controller operably coupled to the liquid reservoir, wherein the controller regulates flow of the working fluid between the liquid reservoir and the conduit; and

wherein the thermal transfer system includes a first condition and a second condition, the end cap absorbing heat and the liquid accumulator storing the working fluid in the first condition, the liquid reservoir directing the working fluid into the conduit and the working fluid absorbing heat from the end cap in the second condition.

13. The thermal transfer system of claim 1 wherein:

the architectural construct includes a first architectural construct and a second architectural construct;

the sidewall includes the first architectural construct and the second architectural construct inward of the first architectural construct;

the layers of the first architectural construct are substantially parallel to a longitudinal axis of the conduit;

the layers of the second architectural construct are substantially perpendicular to the longitudinal axis; and

the layers of the first architectural construct drive a fluid toward the input portion, the fluid being at least one of the working fluid and an external fluid outside the conduit.

14. The thermal transfer system of claim 1 wherein the liquid phase returns to the input region by at least one of gravity, capillary action, and centrifugal force.

15. The thermal transfer system of claim 1 wherein the input portion is installed proximate to at least one of a solar collector, a geothermal formation, and permafrost.

16. The thermal transfer system of claim 1 wherein the output portion is installed proximate to at least one of an aquifer, a gas hydrate deposit, and a geological surface.

17. The thermal transfer system of claim 1 wherein the input portion is a first input portion and the system further comprises a second input portion opposite the first input portion, the output portion being between the first and second input portions.

18. A thermal transfer device, comprising:

a conduit having a vaporization region, a condensation region opposite the vaporization region, and a sidewall wall extending between the vaporization region and the condensation region;

an architectural construct comprising multiple layers of a synthetic matrix characterization of a crystal, individual layers being oriented substantially parallel to one another; and

a working fluid within the conduit, wherein the working fluid includes a liquid phase at the condensation region and a vapor phase at the vaporization region.

19. The thermal transfer device of claim 18 wherein the architectural construct comprises at least one of graphene and boron nitride.

20. The thermal transfer device of claim 18 wherein:

the sidewall comprises the architectural construct, the layers being oriented substantially parallel to a longitudinal axis of the conduit to form passageways between the layers from the vaporization region to the condensation region; and

the layers are angled toward the conduit at the vaporization and condensation regions such that the working fluid moves through the passageways by capillary action.

21. The thermal transfer device of claim 20, further comprising:

a thermal accumulator at the vaporization region;

a liquid reservoir in fluid communication with the peripheral channels at the vaporization region, wherein the liquid reservoir stores the working fluid in the liquid state; and

a controller operatively coupled to the liquid reservoir, the controller regulating flow of the working fluid between the liquid reservoir and the vaporization region.

22. The thermal transfer device of claim 20 wherein:

the architectural construct is a first architectural construct; and

the thermal transfer device further comprises a second architectural construct including multiple layers substantially parallel to one another and comprising the synthetic matrix characterization of the crystal, the second architectural construct being inward of the first architectural construct and the second layers being substantially perpendicular to the longitudinal axis.

23. The thermal transfer device of claim 18, further comprising:

an end cap at the condensation region, the end cap including the architectural construct, the layers being substantially parallel to a longitudinal axis of the conduit.

24. The thermal transfer device of claim 23 wherein the layers of the architectural construct are configured to separate a preselected constituent from the working fluid.

25. The thermal transfer device of claim 18, further comprising:

an end cap at the vaporization region, the end cap including the architectural construct, the layers being substantially parallel to a longitudinal axis of the conduit.

26. The thermal transfer device of claim 25 wherein the layers of the architectural construct are configured to filter a preselected material from the conduit.

27. The thermal transfer device of claim 18 wherein the vaporization region is a first vaporization region and device further comprises a second vaporization region opposite the first vaporization region, the condensation region being between the first and second vaporization regions.

28. A method of transferring heat, comprising:

absorbing heat with a first end cap at an input portion of a conduit;

changing the working fluid from a liquid phase to a vapor phase at the input portion;

advancing the vapor phase through the conduit;

changing the working fluid from the vapor phase to the liquid phase at the output portion;

directing heat from a second end cap at the output portion, at least one of the first end cap, the second end cap, and the conduit including an architectural construct having multiple layers substantially parallel to one another, individual layers comprising a synthetic matrix characterization of a crystal; and

returning the liquid phase along a sidewall of the conduit to the input portion.

29. The method of claim 28 wherein returning the liquid further comprises driving the liquid phase between the layers of the architectural construct at the sidewall by capillary action.

30. The method of claim 28 wherein returning the liquid phase along the sidewall of the conduit to the input portion further comprises applying a centrifugal force to the conduit.

31. The method of claim 28 wherein absorbing heat through the first end cap further comprises absorbing heat from at least one of a solar source, a permafrost source, and a geothermal source.

32. The method of claim 28 wherein directing heat from the second end cap further comprises directing heat to an aquifer, a turbine, and a gas hydrate deposit.

33. The method of claim 28, further comprising:

positioning the architectural construct at the first end cap such that the layers generally align with a heat source;

absorbing a radiative energy having a first wavelength between the layers of the architectural construct; and

radiating at least a portion of the radiative energy from the first end cap at a second wavelength different from the first wavelength.

34. The method of claim 28, further comprising:

positioning the architectural construct at the second end cap such that the layers are substantially parallel to a longitudinal axis of the conduit; and

adsorbing a preselected constituent from the working fluid via the architectural construct.

35. The method of claim 34, further comprising:

receiving a solution through the first end cap; and

combining the solution and the working fluid in the conduit to form the preselected constituent.

36. The method of claim 28, further comprising:

positioning the architectural construct at the first end cap such that the layers are substantially parallel to a longitudinal axis of the conduit; and

filtering a preselected constituent from a heat source via the architectural construct.

37. The method of claim 28, further comprising:

storing the working fluid in a liquid reservoir, the liquid reservoir being in fluid communication with the conduit;

absorbing heat at the first end cap; and

directing the working fluid into the input region.

38. The method of claim 37, further comprising:

modulating the rate of flow of the working fluid to the input region.

39. The method of claim 28 wherein the input portion is a first input portion, and wherein the method further comprises:

absorbing heat with a third end cap at a second input portion of the conduit, the third end cap being opposite the first end cap and the second end cap being there between; and

changing the working fluid from a liquid phase to a vapor phase at the second input portion.

40. A thermal transfer system, comprising:

a conduit having an input portion, an output portion opposite the input portion, and a sidewall between the input and output portions, wherein heat enters the conduit at the input portion and heat exits the conduit at the output portion;

a thermal accumulator at the input portion;

a reservoir in fluid communication with the input portion; and

a working fluid in the conduit, wherein the working fluid changes from a liquid to a vapor proximate to the input portion and from the vapor to the liquid proximate to the output portion.

41. The thermal transfer system of claim 40 wherein the thermal accumulator comprises an architectural construct having a plurality of layers substantially parallel to one another and substantially aligned with a heat source, wherein individual parallel layers comprise a synthetic matrix characterization of a crystal.

42. The thermal transfer system of claim 41 wherein:

the layers are substantially parallel to a longitudinal axis of the conduit; and

the layers prevent at least one constituent proximate to the thermal accumulator from entering the conduit.

43. The thermal transfer system of claim 40 wherein the sidewall comprises an architectural construct having a plurality of layers substantially parallel to one another and oriented substantially parallel to a longitudinal axis of the conduit, individual layers comprising a synthetic matrix characterization of a crystal, and the architectural construct being configured to apply a capillary pressure to the liquid.

44. The thermal transfer system of claim 40, further comprising:

an end cap at the output portion; and

an architectural construct at the end cap, the architectural construct having a plurality of layers substantially parallel to one another and substantially aligned with a longitudinal axis of the conduit, wherein individual parallel layers comprise a synthetic matrix characterization of a crystal, the architectural construct being configured to load the at least one preselected constituent of the working fluid.

45. The thermal transfer system of claim 40 wherein:

the thermal accumulator stores heat in a first condition;

the thermal accumulator transfers heat to the input region in a second condition;

the liquid reservoir stores the working fluid in the first condition;

the liquid reservoir substantially vacates the liquid reservoir in the second condition; and

the working fluid circulates between the input and output portions in the second condition.

46. The thermal transfer system of claim 40, further comprising:

a controller operably coupled to the liquid reservoir, the controller manipulating a flow of the working fluid between the liquid reservoir and the input portion.

47. The thermal transfer system of claim 40 wherein the thermal accumulator is installed proximate to at least one of a solar source, a geothermal source, and a permafrost source.

48. The thermal transfer device of claim 40 wherein the input portion is a first input portion and the system further comprises a second input portion opposite the first input portion, the output portion being between the first and second input portions.

49. A method of transferring heat, comprising:

storing a working fluid in a liquid reservoir proximate to a vaporization region of a conduit;

absorbing heat with a thermal accumulator, the thermal accumulator being at the vaporization region;

directing the working fluid from the liquid reservoir into the vaporization region;

absorbing heat from the thermal accumulator with the working fluid such that the working fluid changes from a liquid phase to a vapor phase at the vaporization region;

advancing the vapor phase through the conduit to a condensation region;

absorbing heat from the working fluid with an end cap at the condensation region such that the working fluid changes from the vapor phase to the liquid phase at the condensation region;

directing the heat away from the condensation region; and

driving the liquid phase to the vaporization region.

50. The method of claim 49, further comprising:

modulating a rate of flow of the working fluid between the liquid reservoir and the vaporization region of the conduit.

51. The method of claim 49 wherein absorbing heat with the thermal accumulator further comprises absorbing heat with an architectural construct having a plurality of layers positioned substantially parallel to one another and substantially aligned with a heat source, individual architectural layers comprising a synthetic matrix characterization of a crystal.

52. The method of claim 49 wherein absorbing heat with the thermal accumulator further comprises absorbing heat from at least one of a solar source, a permafrost source, and a geothermal source.

53. The method of claim 49 wherein directing the heat further comprises directing the heat toward an aquifer, a turbine, and a methane deposit.

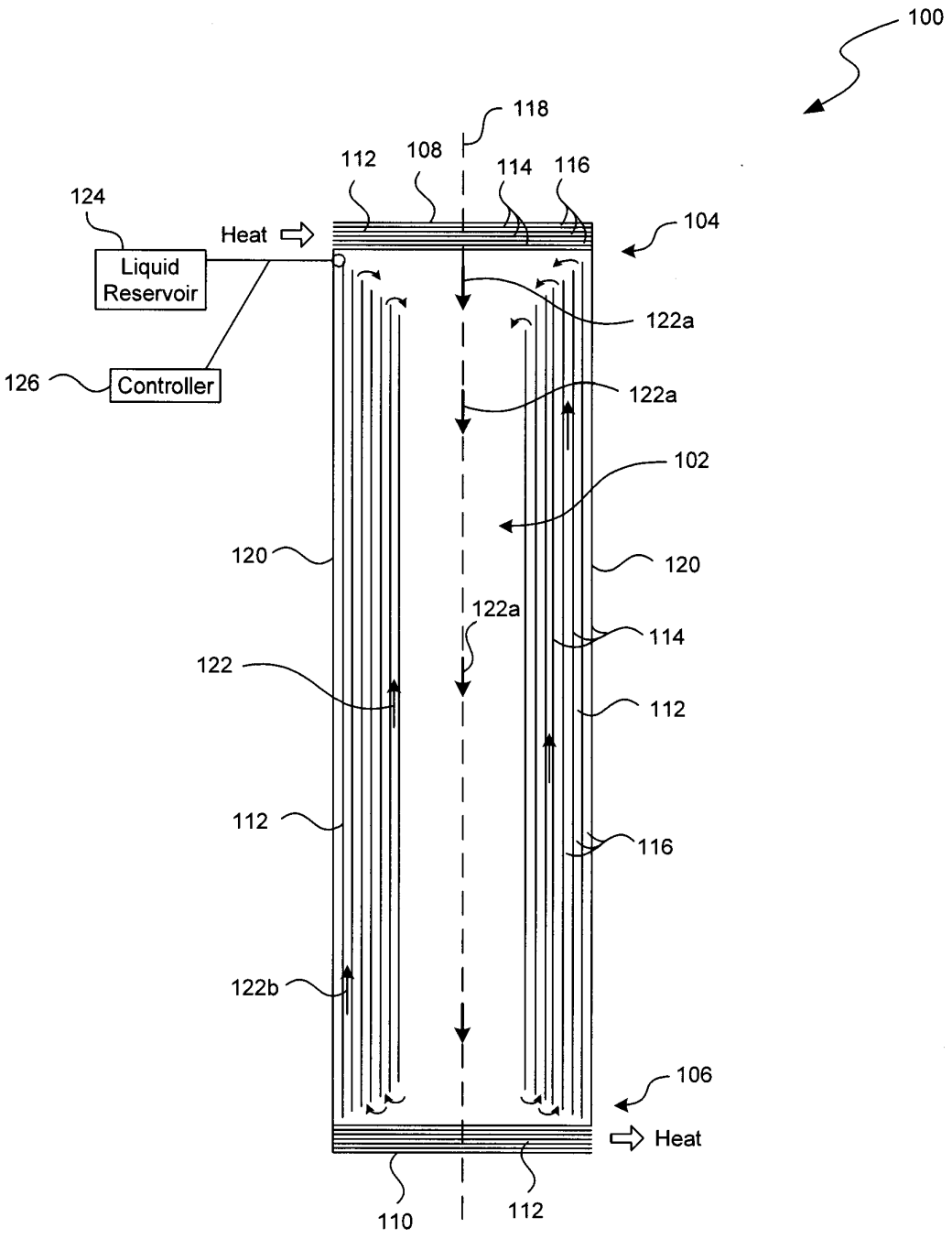
100
118
112
108
114
116
124
Heat
104
Liquid Reservoir
122a
126
Controller
122a
102
120
120
122a
114
122
112
112
116
122b
106
Heat
110
112

FIG. 1

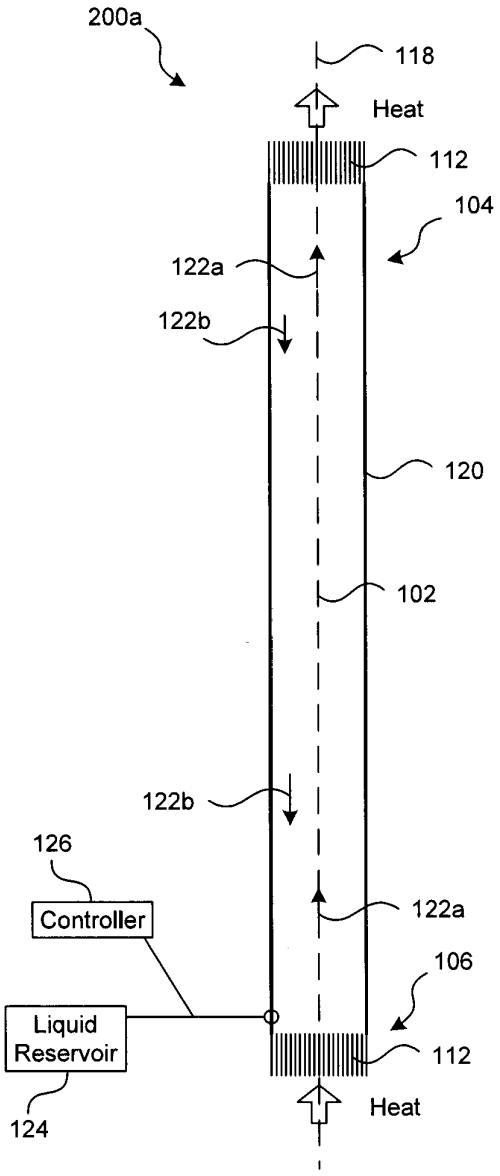
200a
118
Heat
112
104
122a
122b
120
102
122b
126
Controller
122a
106
Liquid
Reservoir
112
124
Heat

FIG. 2A

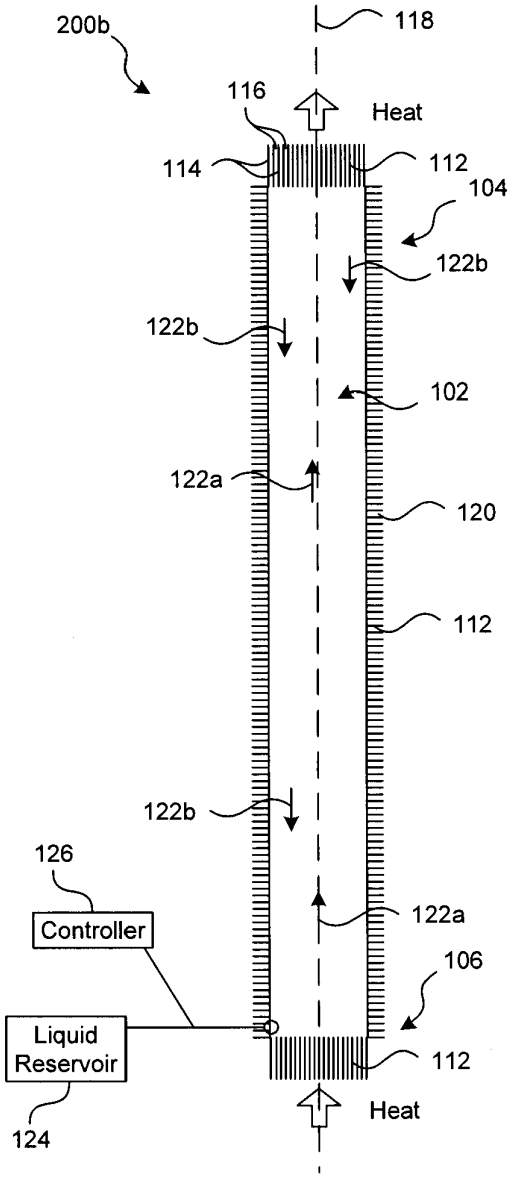
200b
118
116
Heat
114
112
104
122b
122b
102
122a
120
112
122b
126
Controller
122a
106
Liquid
Reservoir
112
124
Heat

FIG. 2B

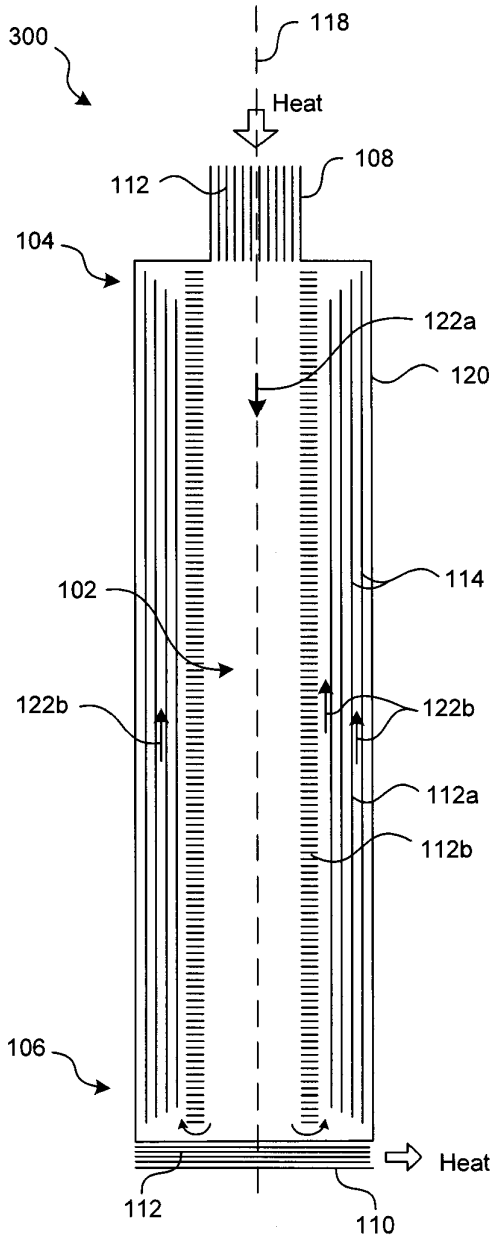
300
118
Heat
108
112
104
122a
120
114
102
122b
122b
112a
112b
106
Heat
112
110

FIG. 3A

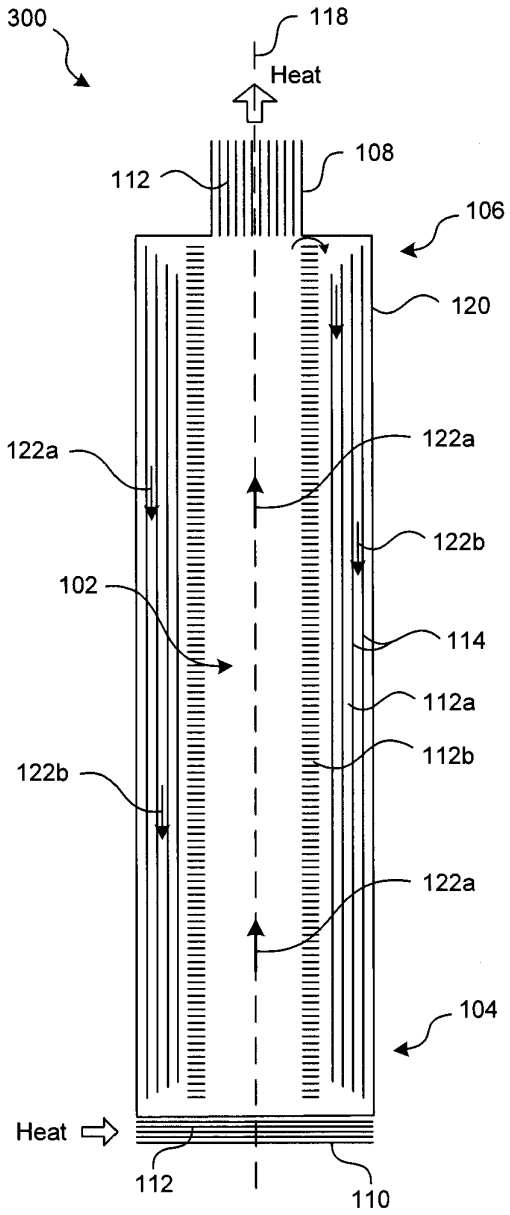
300
118
Heat
108
112
106
120
122a
122a
122b
102
114
112a
112b
122b
122a
104
Heat
112
110

FIG. 3B

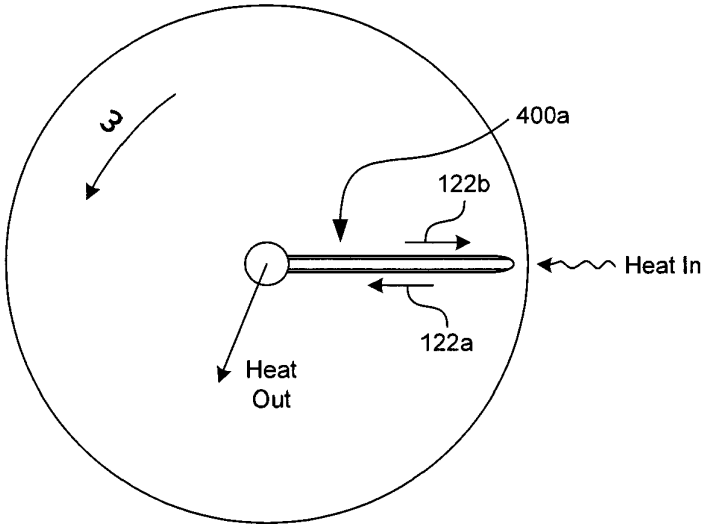
ω
400a
122b
Heat In
122a
Heat
Out

FIG. 4A

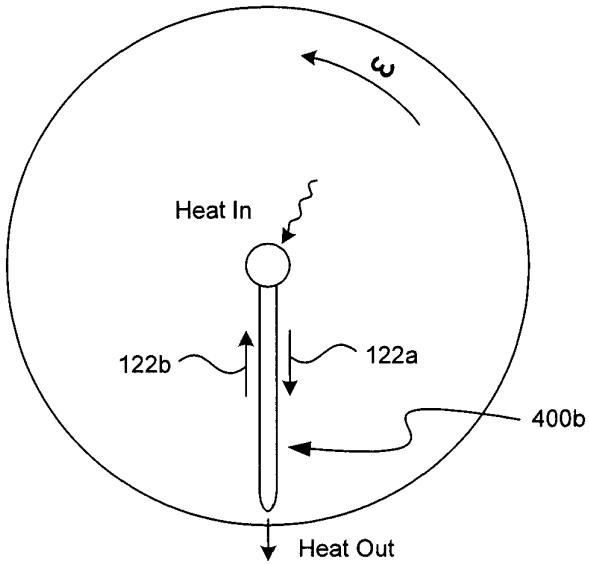
ω
Heat In
122b
122a
400b
Heat Out

FIG. 4B

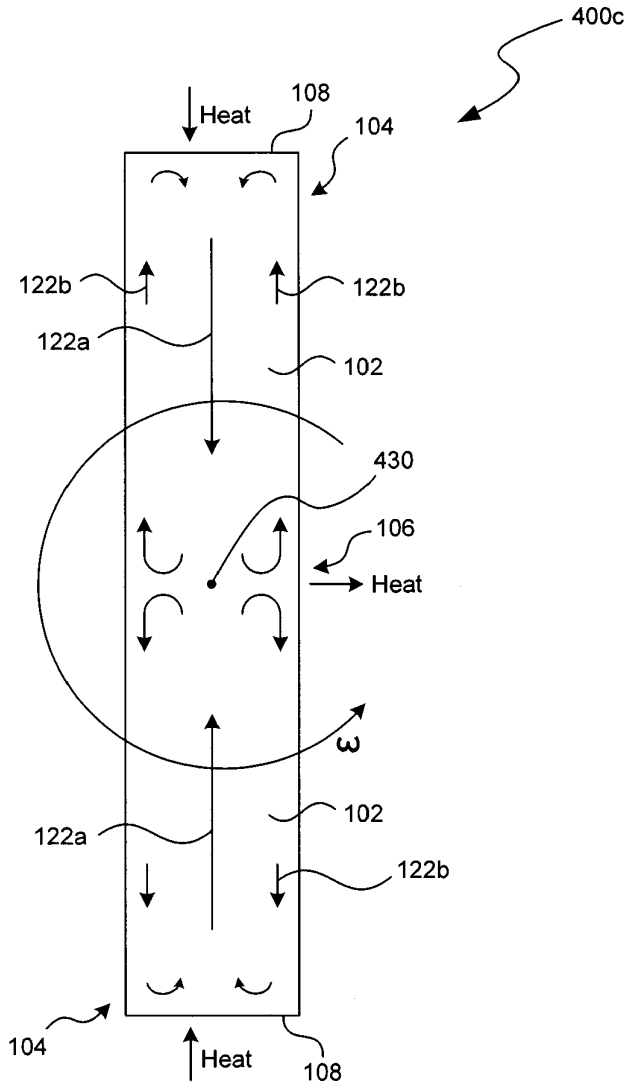
400c
Heat
108
104
122b
122b
122a
102
430
106
Heat
ω
102
122a
122b
104
Heat
108

FIG. 4C

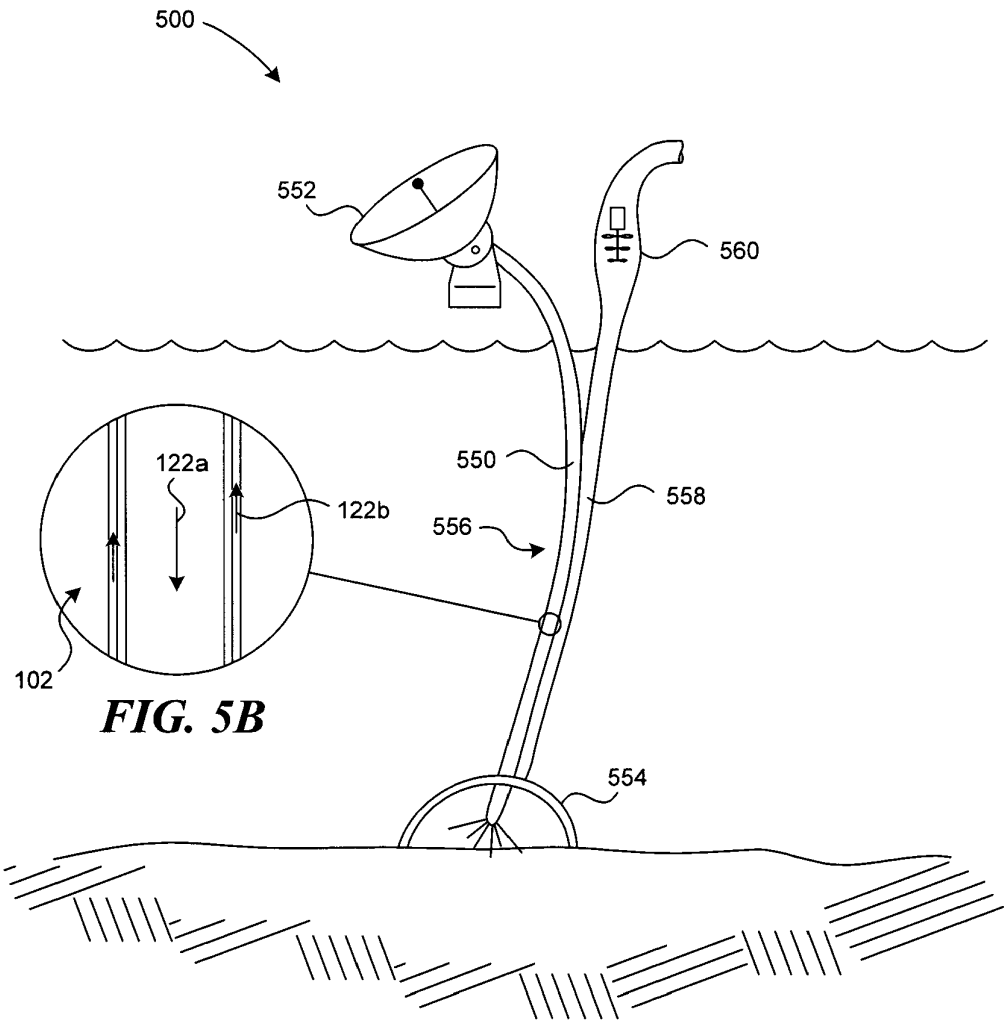

FIG. 5B

FIG. 5A

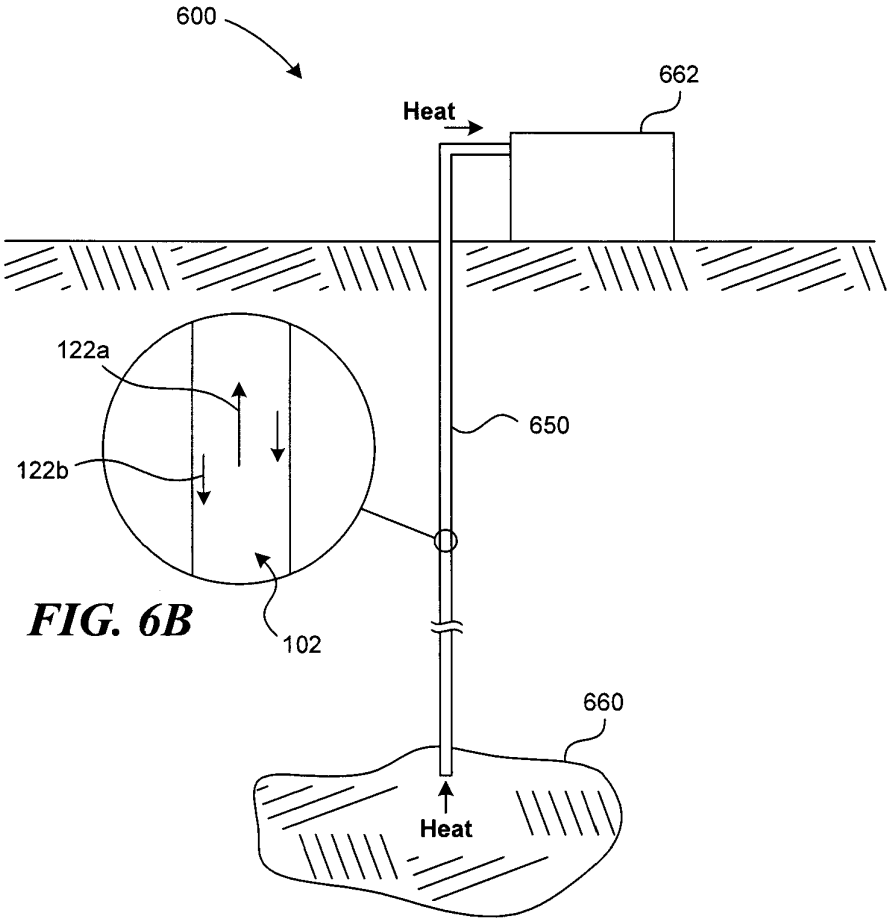

FIG. 6B

FIG. 6A

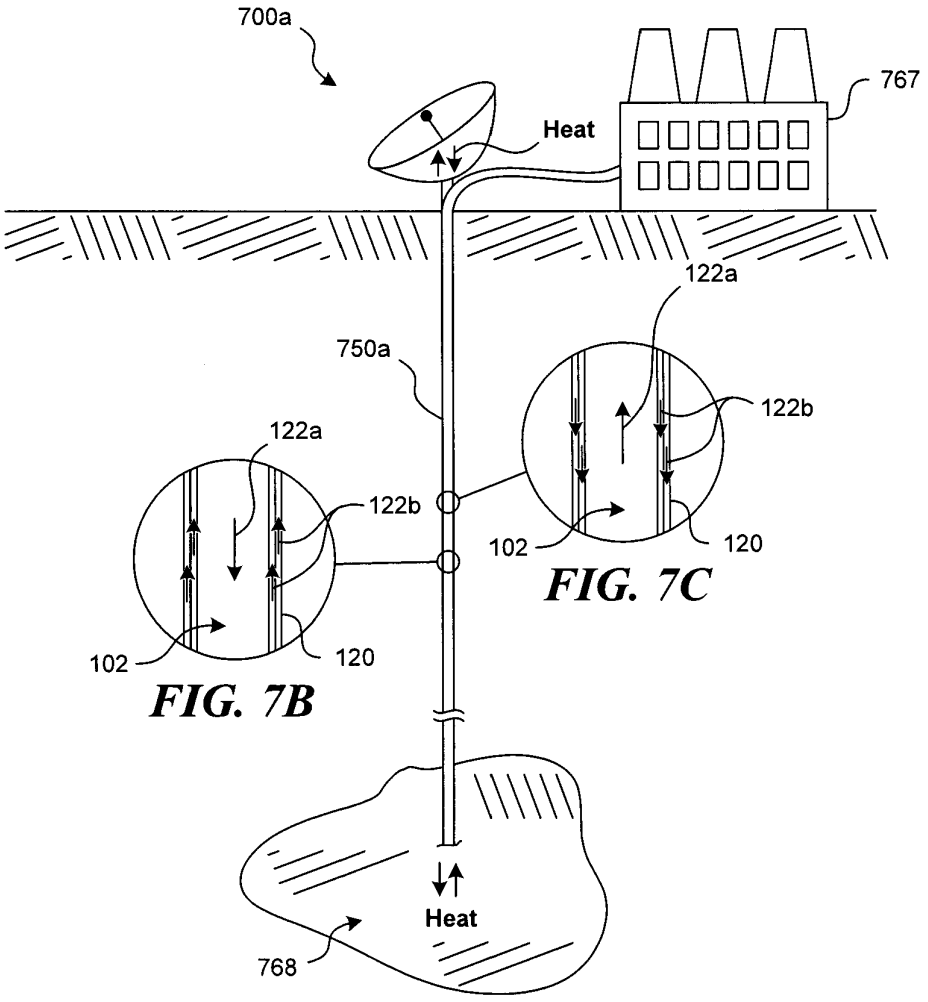

FIG. 7C

FIG. 7B

FIG. 7A

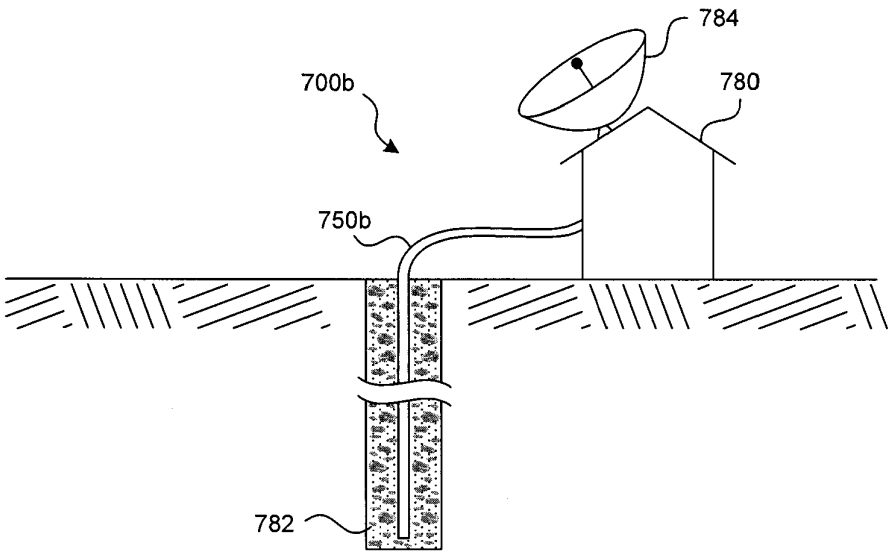

FIG. 7D

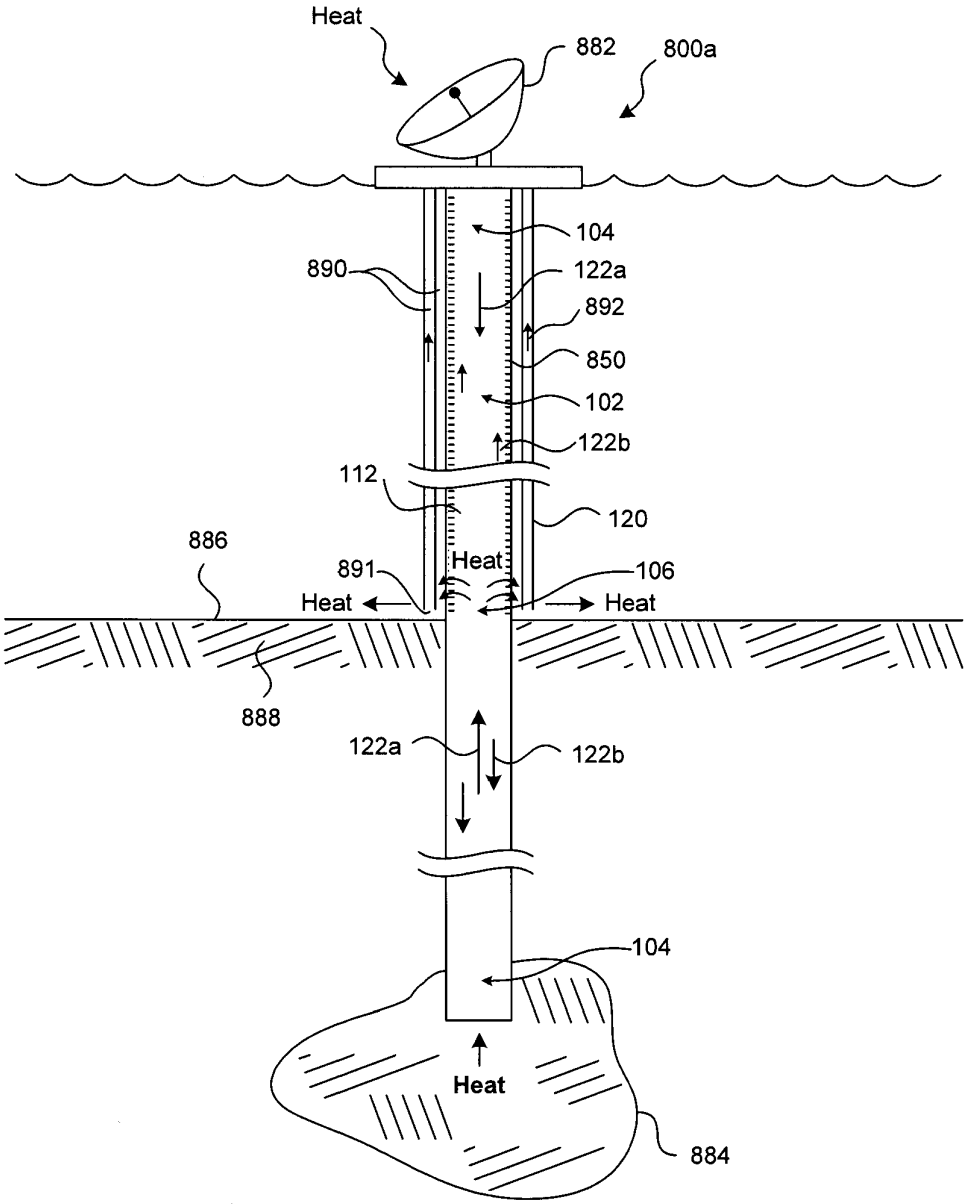
Heat
882
800a
104
890
122a
892
850
102
122b
112
120
886
891
Heat
106
Heat
Heat
888
122a
122b
104
Heat
884

FIG. 8A

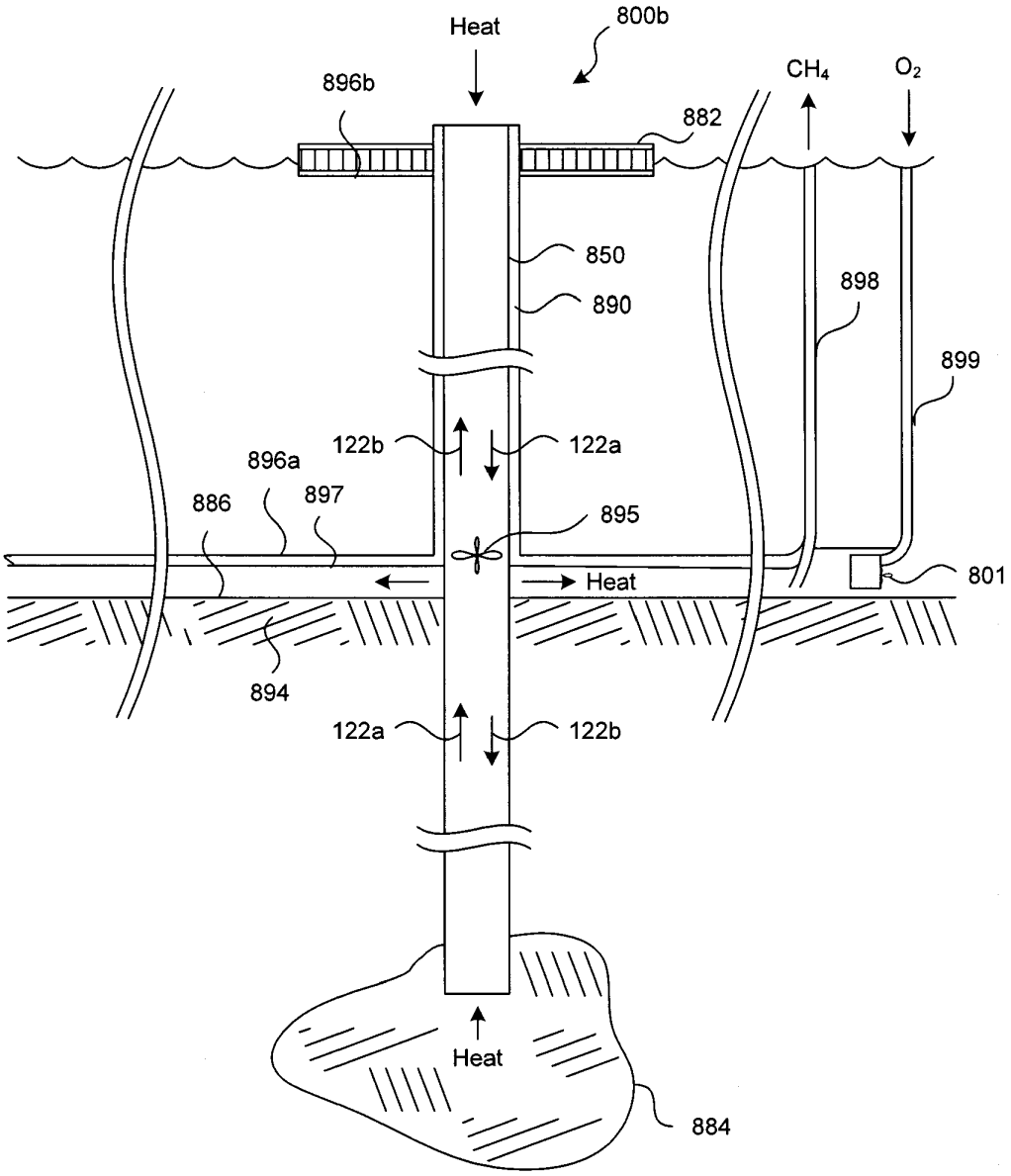
Heat
800b
896b
882
CH_4
O_2
850
890
898
899
122b
122a
896a
886
897
895
Heat
801
894
122a
122b
Heat
884

FIG. 8B

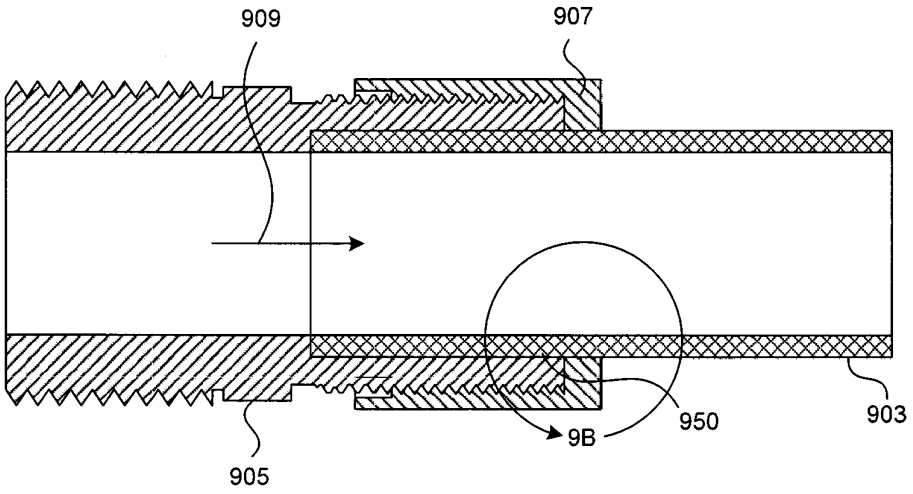

FIG. 9A

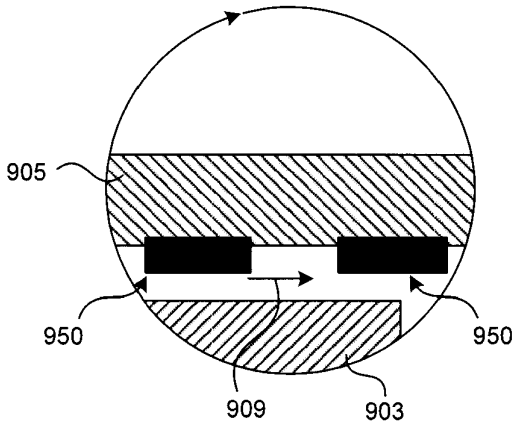

FIG. 9B

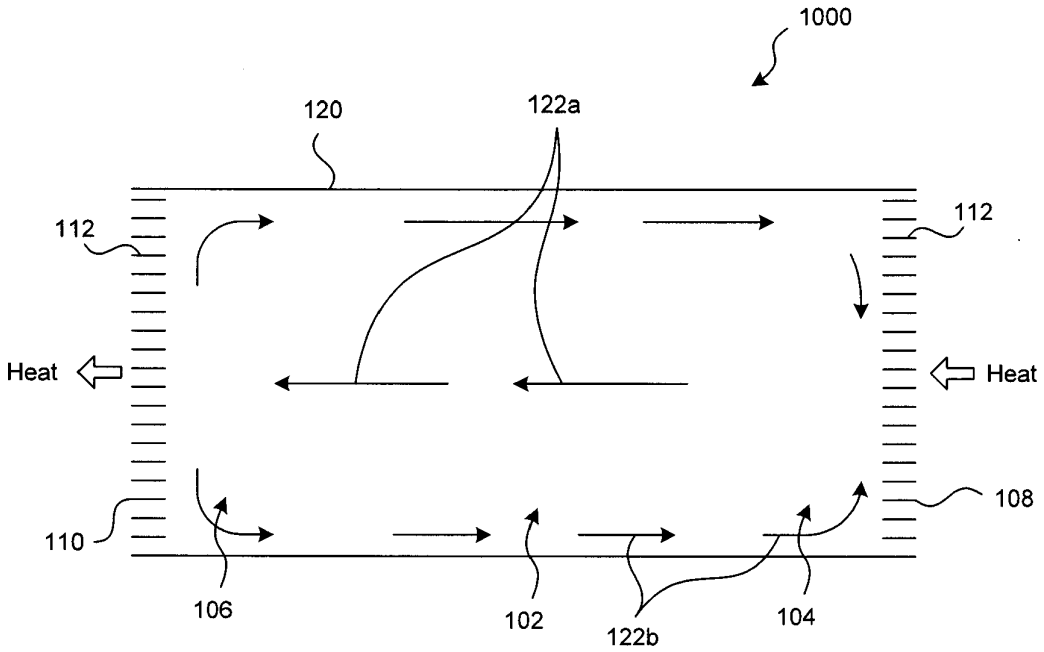

FIG. 10

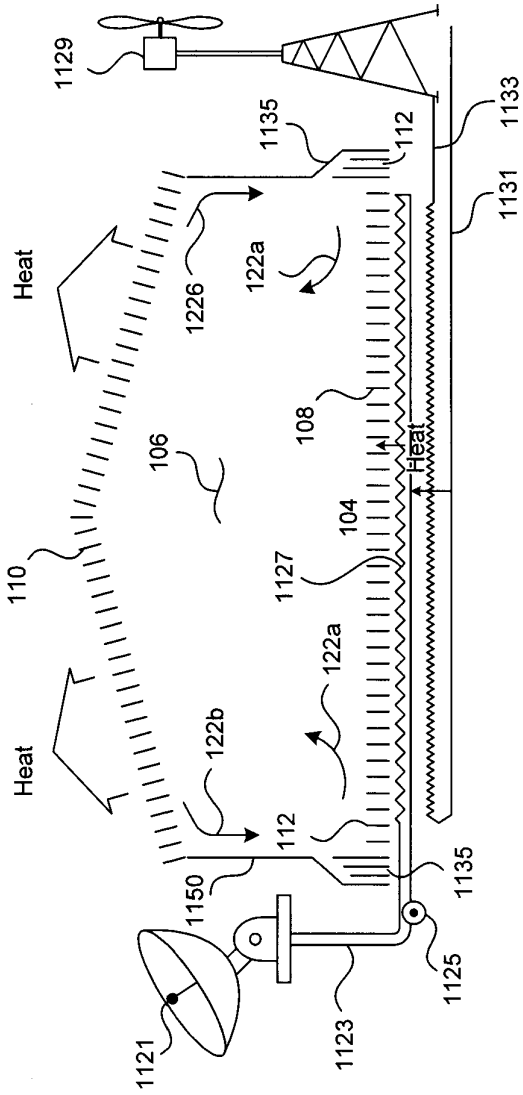
1129
1135
112
1133
1131
Heat
1226
122a
108
106
Heat
110
104
1127
122a
Heat
122b
112
1150
1135
1125
1121
1123

FIG. 11

UNITED STATES PATENT AND TRADEMARK OFFICE

Commissioner for Patents
United States Patent and Trademark Office
P.O. Box 1450
Alexandria, VA 22313-1450
www.uspto.gov

PERKINS COIE LLP
PATENT-SEA
P.O. BOX 1247
SEATTLE WA 98111-1247

MAILED
FEB 28 2012
OFFICE OF PETITIONS

In re Application of
Roy Edward McAlister
Application No.: 13/027,244
Filed: February 14, 2011
Atty. Docket No.: 695458604US
For: Thermal Transfer Device and Associated Systems and Methods

: DECISION ON REQUEST TO
: PARTICIPATE IN THE PATENT
: PROSECUTION HIGHWAY
: PROGRAM AND PETITION
: TO MAKE SPECIAL UNDER
: 37 CFR 1.102(a)

This is a decision on the request to participate in the PCT Patent Prosecution Highway (PCT-PPH) pilot program and the petition under 37 CFR 1.102(a), filed on January 30, 2012, to make the above-identified application special.

The request and petition are **GRANTED**.

Discussion

A grantable request to participate in the PCT-PPH pilot program and petition to make special require:

1) The U.S. application must have an eligible relationship to one or more PCT applications where the ISA or IPEA are Australia, Austria, China, EPO, Finland, JPO, Korea, NPI, Russia, Spain, Sweden and the USPTO;

(2) At least one claim in the PCT application has novelty, inventive step, and industrial applicability and must be free of any observations in Box VIII in the latest work product in the international stage or applicant must identify and explain why the claim(s) is/are not subject to the observation in Box VIII;

(3) Applicant must submit a copy of the claim(s) from the PCT application(s) that have novelty, inventive step, and industrial applicability along with an English translation thereof and a statement that the English translation is accurate, if the claims are not in the English language;

(4) All the claims in the U.S. application must sufficiently correspond or be amended to sufficiently correspond to the claim(s) that have novelty, inventive step, and industrial applicability in the PCT application(s);

(5) Examination of the U.S. application has not begun;

(6) Applicant must submit a copy of the latest international work product from the PCT application indicating that the claim(s) have novelty, inventive step, and industrial applicability along with an English translation thereof and a statement that the English translation is accurate if the latest international work product is not in the English language;

(7) Applicant must submit an IDS listing the documents cited by the PCT examiner in the international work product along with copies of documents except U.S. patents or U.S. patent application publications.

The request to participate in the PCT-PPH pilot program and petition comply with the above requirements. Accordingly, the above-identified application has been accorded "special" status.

Telephone inquiries concerning this decision should be directed to Kimberly Inabinet at 571-272-4618.

All other inquiries concerning the examination or status of the application is accessible in the PAIR system at http://www.uspto.gov/ebc.index.html.

This application will be forwarded to the examiner for action on the merits commensurate with this decision.

FOR

David Bucci
Petitions Examiner
Office of Petitions

Doc Code: PET.GREEN
Document Description: Petition for Green Tech Pilot

PTO/SB/420 (12-09)
Approved for use through 05/31/2010. OMB 0651-0062
U.S. Patent and Trademark Office; U. S. DEPARTMENT OF COMMERCE
Under the Paperwork Reduction Act of 1995, no persons are required to respond to a collection of information unless it displays a valid OMB control number.

PETITION TO MAKE SPECIAL UNDER THE GREEN TECHNOLOGY PILOT PROGRAM

Attorney Docket Number: OLI-148U	Application Number (if known): 13/027,320	Filing date: February 15, 2011

First Named Inventor: Hidekazu ICHINOSE et al.

Title: WIND-TURBINE-GENERATOR CONTROL SYSTEM, WIND FARM, AND WIND-TURBINE-GENERATOR CONTROL METHOD

APPLICANT HEREBY REQUESTS TO PARTICIPATE IN THE GREEN TECHNOLOGY PILOT PROGRAM FOR THE ABOVE-IDENTIFIED APPLICATION. See Instruction Sheet on page 2.

This petition must be timely filed electronically using the USPTO electronic filing system, EFS-Web.

1. By filing this petition:

   Applicant is requesting early publication: Applicant hereby requests early publication under 37 CFR 1.219 and the publication fee set forth in 37 CFR 1.18(d) accompanies this request. Applicant hereby rescinds under 37 CFR 1.213(b) any previous filed request that the above-identified application not be published under 35 U.S.C. 122(b).

   If the application has been published, the petition must still be accompanied by the publication fee set forth in 37 CFR 1.18(d) and a statement that the application has been published.

2. By filing this petition: applicant is agreeing to make an election without traverse in a telephonic interview and elect an invention that meets the eligibility requirement and classification requirement set forth in the notice entitled "Pilot Program for Green Technologies Including Greenhouse Gas Reduction" that was published in the Federal Register if the Office determines that the claims are not obviously directed to a single invention.

3. This request is accompanied by statements of special status for the eligibility requirement.

4. The application contains no more than three (3) independent claims and twenty (20) total claims.

5. The application does not contain any multiple dependent claims.

6. Other attachments: _____

Signature /Benjamin J. Hauptman/	Date February 28, 2011
Name (Print/Typed) Benjamin J. Hauptman	Registration Number 29,310

***Note**: Signatures of all the inventors or assignees of record of the entire interest or their representative(s) are required in accordance with 37 CFR 1.33 and 11.18. Please see 37 CFR 1.4(d) for the form of the signature. If necessary, submit multiple forms for more than one signature, see below*.*

☐ *Total of_____ forms are submitted.

The information is required to obtain or retain a benefit by the public which is to file (and by the USPTO to process) an application. Confidentiality is governed by 35 U.S.C. 122 and 37 CFR 1.11 and 1.14. This collection is estimated to take 12 hours to complete, including gathering, preparing, and submitting the completed application form to the USPTO. Time will vary depending upon the individual case. Any comments on the amount of time you require to complete this form and/or suggestions for reducing this burden, should be sent to the Chief Information Officer, U.S. Patent and Trademark Office, U.S. Department of Commerce, P.O. Box 1450, Alexandria, VA 22313-1450. DO NOT SEND FEES OR COMPLETED FORMS TO THIS ADDRESS. **SEND TO: Commissioner for Patents, P.O. Box 1450, Alexandria, VA 22313-1450.**

If you need assistance in completing the form, call 1-800-PTO-9199 and select option 2.

Under the Paperwork Reduction Act of 1995, no persons are required to respond to a collection of information unless it displays a valid OMB control number.

Instruction Sheet for Petition to Make Special Under the Green Technology Pilot Program

(Not to be Submitted to the USPTO)

The following is a summary of the requirements (for more information see notice "Pilot Program for Green Technologies Including Greenhouse Gas Reduction" available on the USPTO web site at http://www.uspto.gov/web/offices/pac/dapp/ogsheet.html):

(1) The application must be a non-reissue, non-provisional utility application filed under 35 U.S.C. 111(a), or an international application that has entered the national stage in compliance with 35 U.S.C. 371. The application must be previously filed before the publication date of the notice cited above. Reexamination proceedings are excluded from this pilot program.

(2) The application must be classified in one of the U.S. classifications listed in section VI of the notice cited above at the time of examination.

(3) The application must contain three or fewer independent claims and twenty or fewer total claims. The application must not contain any multiple dependent claims. For an application that contains more than three independent claims or twenty total claims, or multiple dependent claims, applicant must file a preliminary amendment in compliance with 37 CFR 1.121 to cancel the excess claims and/or the multiple dependent claims at the time the petition to make special is filed.

(4) The claims must be directed to a single invention that materially enhances the quality of the environment, or that materially contributes to: (1) the discovery or development of renewable energy resources; (2) the more efficient utilization and conservation of energy resources; or (3) green house gas emission reduction (see the eligibility requirements of sections II and III of the notice cited above). The petition must include a statement that, if the USPTO determines that the claims are directed to multiple inventions (e.g., in a restriction requirement), applicant will agree to make an election without traverse in a telephonic interview, and elect an invention that meets the eligibility requirements in section II or III of the notice cited above and is classified in one of the U.S. classifications listed in section VI of the notice cited above.

(5) The petition to make special must be timely filed electronically using the USPTO electronic filing system, EFS-Web, and selecting the document description of "Petition for Green Tech Pilot" on the EFS-Web screen. Applicant should use form PTO/SB/420, which will be available as a Portable Document Format (PDF) fillable form in EFS-Web and on the USPTO Web site.

(6) The petition to make special must be filed at least one day prior to the date that a first Office action (which may be an Office action containing only a restriction requirement) appears in the Patent Application Information Retrieval (PAIR) system. Applicant may check the status of the application using PAIR.

(7) The petition to make special must be accompanied by a request for early publication in compliance with 37 CFR 1.219 and the publication fee set forth in 37 CFR 1.18(d).

Privacy Act Statement

The **Privacy Act of 1974 (P.L. 93-579)** requires that you be given certain information in connection with your submission of the attached form related to a patent application or patent. Accordingly, pursuant to the requirements of the Act, please be advised that: (1) the general authority for the collection of this information is 35 U.S.C. 2(b)(2); (2) furnishing of the information solicited is voluntary; and (3) the principal purpose for which the information is used by the U.S. Patent and Trademark Office is to process and/or examine your submission related to a patent application or patent. If you do not furnish the requested information, the U.S. Patent and Trademark Office may not be able to process and/or examine your submission, which may result in termination of proceedings or abandonment of the application or expiration of the patent.

The information provided by you in this form will be subject to the following routine uses:

1. The information on this form will be treated confidentially to the extent allowed under the Freedom of Information Act (5 U.S.C. 552) and the Privacy Act (5 U.S.C 552a). Records from this system of records may be disclosed to the Department of Justice to determine whether disclosure of these records is required by the Freedom of Information Act.

2. A record from this system of records may be disclosed, as a routine use, in the course of presenting evidence to a court, magistrate, or administrative tribunal, including disclosures to opposing counsel in the course of settlement negotiations.

3. A record in this system of records may be disclosed, as a routine use, to a Member of Congress submitting a request involving an individual, to whom the record pertains, when the individual has requested assistance from the Member with respect to the subject matter of the record.

4. A record in this system of records may be disclosed, as a routine use, to a contractor of the Agency having need for the information in order to perform a contract. Recipients of information shall be required to comply with the requirements of the Privacy Act of 1974, as amended, pursuant to 5 U.S.C. 552a(m).

5. A record related to an International Application filed under the Patent Cooperation Treaty in this system of records may be disclosed, as a routine use, to the International Bureau of the World Intellectual Property Organization, pursuant to the Patent Cooperation Treaty.

6. A record in this system of records may be disclosed, as a routine use, to another federal agency for purposes of National Security review (35 U.S.C. 181) and for review pursuant to the Atomic Energy Act (42 U.S.C. 218(c)).

7. A record from this system of records may be disclosed, as a routine use, to the Administrator, General Services, or his/her designee, during an inspection of records conducted by GSA as part of that agency's responsibility to recommend improvements in records management practices and programs, under authority of 44 U.S.C. 2904 and 2906. Such disclosure shall be made in accordance with the GSA regulations governing inspection of records for this purpose, and any other relevant (*i.e.*, GSA or Commerce) directive. Such disclosure shall not be used to make determinations about individuals.

8. A record from this system of records may be disclosed, as a routine use, to the public after either publication of the application pursuant to 35 U.S.C. 122(b) or issuance of a patent pursuant to 35 U.S.C. 151. Further, a record may be disclosed, subject to the limitations of 37 CFR 1.14, as a routine use, to the public if the record was filed in an application which became abandoned or in which the proceedings were terminated and which application is referenced by either a published application, an application open to public inspection or an issued patent.

9. A record from this system of records may be disclosed, as a routine use, to a Federal, State, or local law enforcement agency, if the USPTO becomes aware of a violation or potential violation of law or regulation.

UNITED STATES PATENT AND TRADEMARK OFFICE

UNITED STATES DEPARTMENT OF COMMERCE
United States Patent and Trademark Office
Address: COMMISSIONER FOR PATENTS
P.O. Box 1450
Alexandria, Virginia 22313-1450
www.uspto.gov

APPLICATION NO.	FILING DATE	FIRST NAMED INVENTOR	ATTORNEY DOCKET NO.	CONFIRMATION NO.
13/027,320	02/15/2011	Hidekazu ICHINOSE	OLI-148U	6635

32628 7590 05/04/2011
KANESAKA BERNER AND PARTNERS LLP
1700 DIAGONAL RD
SUITE 310
ALEXANDRIA, VA 22314-2848

EXAMINER

ART UNIT	PAPER NUMBER
2839	

MAIL DATE	DELIVERY MODE
05/04/2011	PAPER

Please find below and/or attached an Office communication concerning this application or proceeding.

The time period for reply, if any, is set in the attached communication.

UNITED STATES PATENT AND TRADEMARK OFFICE

Commissioner for Patents
United States Patent and Trademark Office
P.O. Box 1450
Alexandria, VA 22313-1450
www.uspto.gov

KANESAKA BERNER AND PARTNERS LLP
1700 DIAGONAL RD
SUITE 310
ALEXANDRIA VA 22314-2848

In re Application of	:	
ICHINOSE et al.	:	DECISION ON PETITION
Application No. 13/027,320	:	TO MAKE SPECIAL UNDER
Filed: February 15, 2011	:	THE GREEN TECHNOLOGY
Attorney Docket No. OLI-148U	:	PILOT PROGRAM

This is a decision on the petition under 37 CFR 1.102, filed on February 28, 2011, to make the above-identified application special under the pilot program for applications pertaining to Green Technologies as set forth 74 Federal Register Notice 64666 (December 8, 2009) and amended by 75 Federal Register Notice 28554 (May 21, 2010) and 75 Federal Register Notice 69049 (November 10, 2010).

The petition is **GRANTED**.

A grantable petition to make an application special under 37 CFR 1.102 and the pilot program as set forth in 74 FR 64666 must be directed to a nonprovisional application filed under 35 USC 111(a) or be a national stage entry under 35 USC 371, exclusive of any reissue applications.

In order to qualify for special status, the following requirements must be met. 1) The application must have no more than 3 independent claims and no more than 20 total claims. 2) The application must not contain any multiple dependent claims. 3) The petition must state the basis for seeking special status, i.e., the claimed invention either: A) materially enhances the quality of the environment or B) materially contributes to: i) the discovery or development of renewable energy resources, ii) the more efficient utilization and conservation of energy resources, or iii) greenhouse gas emission reduction. 4) If the disclosure is not clear on its face that the claimed invention materially contributes under category (A) or (B), the petition must be accompanied by a statement by the applicant, assignee, or an attorney/agent registered to practice before the Office explaining how the materiality standard is met. 5) A statement that applicant will agree to make an election without traverse in a telephonic interview if a restriction requirement is made by the examiner. 6) The petition to make special must be filed electronically. 7) The petition must be filed at least one day prior to the date that a first Office Action appears in the Patent Application Information Retrieval (PAIR) system. 8) The petition must be accompanied by a request for early publication in compliance with 37 CFR 1.219 and include the publication fee as set forth in 37 CFR 1.18(d).

The requirement for a fee for consideration of the petition to make special for applications pertaining to Green Technologies has been waived.

The instant petition complies with items 1 – 8 above. Accordingly, the above-identified application has been accorded "special" status.

Telephone inquires concerning this decision should be directed to Lee W. Young at 571-272-4549.

The application is being forwarded to the Technology Center Art Unit 2839 for action on the merits commensurate with this decision.

Lee W. Young
Quality Assurance Specialist
Technology Center 2800

UNITED STATES PATENT AND TRADEMARK OFFICE

Commissioner for Patents
United States Patent and Trademark Office
P.O. Box 1450
Alexandria, VA 22313-1450
www.uspto.gov

LUCAS & MERCANTI, LLP
475 PARK AVENUE SOUTH
15TH FLOOR
NEW YORK NY 10016

MAILED
APR 26 2011
OFFICE OF PETITIONS

In re Application of	:	
Hans-Jüergen Hanning	:	
Application No. 13/027,368	:	DECISION ON PETITION
Filed: February 15, 2011	:	TO MAKE SPECIAL UNDER
Attorney Docket No. LSP-27	:	37 CFR 1.102(c)(1)
	:	

This is a decision on the petition under 37 CFR 1.102(c)(1), filed February 15, 2011, to make the above-identified application special based on applicant's age as set forth in M.P.E.P. § 708.02, Section IV.

The petition is **GRANTED.**

A grantable petition to make an application special under 37 CFR 1.102(c)(1) and MPEP § 708.02, Section IV: Applicant's Age must be accompanied by evidence showing that at least one of the applicants is 65 years of age, or more, such as a birth certificate or a statement by applicant. No fee is required

The instant petition includes a statement by an attorney on behalf of inventor Hans-Jüergen Hanning, attesting to his/her age. The above-identified application has been accorded "special" status.

Telephone inquiries concerning this decision should be directed to Kimberly Inabinet at 571-272-4618.

All other inquiries concerning either the examination or status of the application should be directed to the Technology Center.

The application is being forwarded to the Technology Center Art Unit 3633 for action on the merits commensurate with this decision.

/Kimberly Inabinet/

Kimberly Inabinet
Petitions Examiner
Office of Petitions

UNITED STATES PATENT AND TRADEMARK OFFICE

Commissioner for Patents
United States Patent and Trademark Office
P.O. Box 1450
Alexandria, VA 22313-1450
www.uspto.gov

In re Application of
Shimon Mizrahi

Application No. 13027423

Filed:

Attorney Docket No. 1431-004

:DECISION ON PETITION TO MAKE SPECIAL
:UNDER 37 CFR 1.102(c)(1)

This is a decision on the electronic petition under 37 CFR 1.102 (c)(1), filed 15-FEB-2011 to make the above-identified application special based on applicant's age as set forth in MPEP § 708.02, Section IV.

The petition is **GRANTED**.

A grantable petition to make an application special under 37 CFR 1.102(c)(1), MPEP § 708.02, Section IV: Applicant's Age must include a statement by applicant or a registered practitioner having evidence that applicant is at least 65 years of age. No fee is required.

Accordingly, the above-identified application has been accorded "special" status and will be taken up for action by the examiner upon the completion of all pre-examination processing.

Telephone inquiries concerning this electronic decision should be directed to the Electronic Business Center at 866-217-9197.

All other inquiries concerning either the examination or status of the application should be directed to the Technology Center.

UNITED STATES PATENT AND TRADEMARK OFFICE

Commissioner for Patents
United States Patent and Trademark Office
P.O. Box 1450
Alexandria, VA 22313-1450
www.uspto.gov

DOBRUSIN & THENNISCH PC
29 W LAWRENCE ST
SUITE 210
PONTIAC MI 48342

MAILED
NOV 22 2011
OFFICE OF PETITIONS

In re Application of	:	
Mizrahi et al.	:	
Application No. 13/027,423	:	NOTICE
Filed: February 15, 2011	:	
Attorney Docket No. 1431-004	:	

This is a notice regarding your request for acceptance of a fee deficiency submission under 37 CFR 1.28 filed April 11, 2011.

The Office no longer investigates or rejects original or reissue applications under 37 CFR 1.56. **1098 Off. Gaz. Pat. Office 502 (January 3, 1989)**. Therefore, nothing in this Notice is intended to imply that an investigation was done.

Your fee deficiency submission under 37 CFR 1.28 is hereby **ACCEPTED**.

This application is no longer entitled to small entity status. Accordingly, all future fees paid in this application must be paid at the large entity rate.

This application is being forwarded to art unit 1787 for processing in the normal course of business.

Inquiries related to this communication should be directed to the undersigned at (571) 272-3215.

Charlema Grant
Attorney Advisor
Office of Petitions

UNITED STATES PATENT AND TRADEMARK OFFICE

Commissioner for Patents
United States Patent and Trademark Office
P.O. Box 1450
Alexandria, VA 22313-1450
www.uspto.gov

SAUL EWING LLP (BALTIMORE)
ATTN: PATENT DOCKET CLERK
CENTRE SQUARE WEST
1500 MARKET STREET, 38TH FLOOR
PHILADELPHIA PA 19102

MAILED
NOV 29 2011
OFFICE OF PETITIONS

In re Application of	:	
Fredric David Abramson	:	DECISION ON PETITION
Application No. 13/027,427	:	TO WITHDRAW
Filed: February 15, 2011	:	FROM RECORD
Attorney Docket No. 355970.00006	:	

This is a decision on the Request to Withdraw as attorney or agent of record under 37 C.F.R. § 1.36(b) filed October 18, 2011, which is being treated as a request to withdraw from employment in a proceeding before the Office under 37 C.F.R. § 10.40.

The request is **DISMISSED**.

A review of the file record indicates that Gianna Julian-Arnold does not have power of attorney in this patent application. Accordingly, the request to withdraw under 37 C.F.R. § 1.36(b) is not applicable.

The request to change the correspondence address of record is not accepted in view of Gianna Julian-Arnold not having power of attorney. See MPEP §§ 601.03 and 405.

All future communications from the Office will continue to be directed to the above-listed address until otherwise notified by applicant. Additionally, the address given on the request differs from the address of record, therefore, a courtesy copy of this decision is being mailed to the address given on the request; however, the Office will mail all future correspondence solely to the address of record.

Currently, there is an outstanding Office action mailed November 25, 2011 that requires a reply.

Telephone inquiries concerning this decision should be directed to the undersigned at (571) 272-7751.

/Joan Olszewski/
Joan Olszewski
Petitions Examiner
Office of Petitions

cc: Gianna Julian-Arnold
Saul Ewing LLP
500 East Pratt, Suite 900
Baltimore, MD 21201

UNITED STATES PATENT AND TRADEMARK OFFICE

Commissioner for Patents
United States Patent and Trademark Office
P.O. Box 1450
Alexandria, VA 22313-1450
www.uspto.gov

SAUL EWING LLP (BALTIMORE)
ATTN: PATENT DOCKET CLERK
CENTRE SQUARE WEST
1500 MARKET STREET, 38TH FLOOR
PHILADELPHIA PA 19102

MAILED

NOV 29 2011

OFFICE OF PETITIONS

In re Application of	:	
Fredric David Abramson	:	
Application No. 13/027,427	:	DECISION ON PETITION
Filed: February 15, 2011		TO WITHDRAW FROM RECORD
Attorney Docket No. 355970.00006	:	
	:	

This is a decision on the Request to Withdraw as attorney or agent of record under 37 C.F.R. § 1.36(b), filed November 16, 2011.

The request is **APPROVED**.

A grantable request to withdraw as attorney/agent of record must be signed by every attorney/agent seeking to withdraw or contain a clear indication that one attorney is signing on behalf of another/others. The Office will require the practitioner(s) to certify that he, she or they have: (1) given reasonable notice to the client, prior to the expiration of the reply period, which the practitioner(s) intends to withdraw from employment; (2) delivered to the client or a duly authorized representative of the client all papers and property (including funds) to which the client is entitled; and (3) notified the client of any replies that may be due and the time frame within which the client must respond, pursuant to 37 CFR 10.40 (c).

The request was signed by Konstantina Katcheves on behalf of himself. Accordingly, Konstantina Katcheves associated with the above-identified application has been withdrawn as attorney of record in the above-identified application.

All future correspondence will be directed to the applicant at the address indicated below.

Additionally, the address given on the petition differs from the address of record. A courtesy copy of this decision is being mailed to the address given on the petition; however, the Office will mail all future correspondence solely to the address of record.

Currently, there is an outstanding Office action mailed November 25, 2011 that requires a reply.

Telephone inquiries concerning this decision should be directed to the undersigned at (571) 272-7751. All other inquiries concerning either the examination or status of the application should be directed to the Technology Center.

/Joan Olszewski/
Joan Olszewski
Petitions Examiner
Office of Petitions

cc: Fredric D. Abramson
21155 Woodfield Road
Gaithersburg, MD 20882

cc: Konstantina Katcheves
2821 Brian Ct.
Ellicott City, MD 21043

UNITED STATES PATENT AND TRADEMARK OFFICE

UNITED STATES DEPARTMENT OF COMMERCE
United States Patent and Trademark Office
Address: COMMISSIONER FOR PATENTS
P.O. Box 1450
Alexandria, Virginia 22313-1450
www.uspto.gov

APPLICATION NO.	FILING DATE	FIRST NAMED INVENTOR	ATTORNEY DOCKET NO.	CONFIRMATION NO.
13/027,509	02/15/2011	Chiu NGO	SAM2B.PAU.e158	6954

97001 7590 02/08/2012
Myers Andras Sherman & Zarrabian LLP
(Samsung R&D Center)
1411 5th Street, Suite 306
Santa Monica, CA 90401

EXAMINER
KELLEY, CHRISTOPHER S

ART UNIT	PAPER NUMBER
2482	

MAIL DATE	DELIVERY MODE
02/08/2012	PAPER

Please find below and/or attached an Office communication concerning this application or proceeding.

The time period for reply, if any, is set in the attached communication.

UNITED STATES PATENT AND TRADEMARK OFFICE

Commissioner for Patents
United States Patent and Trademark Office
P.O. Box 1450
Alexandria, VA 22313-1450
www.uspto.gov

MAILED

FEB 08 2012

DIRECTOR OFFICE
TECHNOLOGY CENTER 2400

Myers Andras Sherman & Zarrabian LLP
(Samsung R&D Center)
1411 5th Street, Suite 306
Santa Monica CA 90401

In re Application of: Ngo et al.
Appl. No.: 13/027,509
Filed: February 15 , 2011
For: METHOD AND SYSTEM FOR CHROMA PARTITIONING AND RATE ADAPTATION FOR UNCOMPRESSED VIDEO TRANSMISSION IN WIRELESS NETWORKS

DECISION ON PETITION UNDER 37 CFR § 1.59

This is a response to the petition under 37 CFR 1.59(b), filed December 21, 2011, to expunge information from the above identified application.

The decision on the petition will be held in abeyance until allowance of the application or mailing of an Ex parte Quayle action or a Notice of Abandonment, at which time the petition will be decided.

Petitioner requests that a document entitled "HITACHI, LTD. Et al., High-Definition Multimedia Interface Specification Version 1.4, HDMI Licensing, LLC, 5 June 2009, pp. i-ii and 109-116, United States" and "BROADCOM CORPORATION et al., WirelessHD Specification Revision 1.1, WirelessHD, LLC, 8 April 2010, pp. i-ii and 453-468, United States" be expunged from the record. Petitioner states either: (A) that the information contains trade secret material, proprietary material and/or material that is subject to a protective order which has not been made public; or (B) that the information submitted was unintentionally submitted and the failure to obtain its return would cause irreparable harm to the party who submitted the information or to the party in interest on whose behalf the information was submitted, and the information has not otherwise been made public. The petition fee set forth in 37 CFR 1.17(g) has been paid.

The decision on the petition is held in abeyance because prosecution on the merits is not closed. Accordingly, it is not appropriate to make a final determination of whether or not the material requested to be expunged is "material," with "materiality" being defined as any information which the examiner considers as being important to a determination of patentability of the claims. Thus, the decision on the petition to expunge must be held in abeyance at this time. During prosecution on the merits, the examiner will determine whether or not the identified document is considered to be "material." If the information is not considered by the examiner to be material, the information will be removed from the official file.

Any inquiry concerning this decision should be directed to the undersigned whose telephone number is (571) 272-3126.

/Chau Nguyen/

Chau Nguyen
QAS, Technology Center 2400

UNITED STATES PATENT AND TRADEMARK OFFICE

UNITED STATES DEPARTMENT OF COMMERCE
United States Patent and Trademark Office
Address: COMMISSIONER FOR PATENTS
P.O. Box 1450
Alexandria, Virginia 22313-1450
www.uspto.gov

APPLICATION NO.	FILING DATE	FIRST NAMED INVENTOR	ATTORNEY DOCKET NO.	CONFIRMATION NO.
13/027,509	02/15/2011	Chiu NGO	SAM2B.PAU.e158	6954

97001 7590 02/08/2012
Myers Andras Sherman & Zarrabian LLP
(Samsung R&D Center)
1411 5th Street, Suite 306
Santa Monica, CA 90401

EXAMINER
KELLEY, CHRISTOPHER S

ART UNIT	PAPER NUMBER
2482	

MAIL DATE	DELIVERY MODE
02/08/2012	PAPER

Please find below and/or attached an Office communication concerning this application or proceeding.

The time period for reply, if any, is set in the attached communication.

UNITED STATES PATENT AND TRADEMARK OFFICE

Commissioner for Patents
United States Patent and Trademark Office
P.O. Box 1450
Alexandria, VA 22313-1450
www.uspto.gov

MAILED

FEB 08 2012

DIRECTOR OFFICE
TECHNOLOGY CENTER 2400

Myers Andras Sherman & Zarrabian LLP
(Samsung R&D Center)
1411 5th Street, Suite 306
Santa Monica CA 90401

In re Application of: Ngo et al.
Appl. No.: 13/027,509
Filed: February 15 , 2011
For: METHOD AND SYSTEM FOR CHROMA PARTITIONING AND RATE ADAPTATION FOR UNCOMPRESSED VIDEO TRANSMISSION IN WIRELESS NETWORKS

DECISION ON PETITION UNDER 37 CFR § 1.59

This is a response to the petition under 37 CFR 1.59(b), filed December 21, 2011, to expunge information from the above identified application.

The decision on the petition will be held in abeyance until allowance of the application or mailing of an Ex parte Quayle action or a Notice of Abandonment, at which time the petition will be decided.

Petitioner requests that a document entitled "HITACHI, LTD. Et al., High-Definition Multimedia Interface Specification Version 1.4, HDMI Licensing, LLC, 5 June 2009, pp. i-ii and 109-116, United States" and "BROADCOM CORPORATION et al., WirelessHD Specification Revision 1.1, WirelessHD, LLC, 8 April 2010, pp. i-ii and 453-468, United States" be expunged from the record. Petitioner states either: (A) that the information contains trade secret material, proprietary material and/or material that is subject to a protective order which has not been made public; or (B) that the information submitted was unintentionally submitted and the failure to obtain its return would cause irreparable harm to the party who submitted the information or to the party in interest on whose behalf the information was submitted, and the information has not otherwise been made public. The petition fee set forth in 37 CFR 1.17(g) has been paid.

The decision on the petition is held in abeyance because prosecution on the merits is not closed. Accordingly, it is not appropriate to make a final determination of whether or not the material requested to be expunged is "material," with "materiality" being defined as any information which the examiner considers as being important to a determination of patentability of the claims. Thus, the decision on the petition to expunge must be held in abeyance at this time. During prosecution on the merits, the examiner will determine whether or not the identified document is considered to be "material." If the information is not considered by the examiner to be material, the information will be removed from the official file.

Any inquiry concerning this decision should be directed to the undersigned whose telephone number is (571) 272-3126.

/Chau Nguyen/

Chau Nguyen
QAS, Technology Center 2400

UNITED STATES PATENT AND TRADEMARK OFFICE

Commissioner for Patents
United States Patent and Trademark Office
P.O. Box 1450
Alexandria, VA 22313-1450
www.uspto.gov

SNR DENTON US LLP
PO BOX 061080
CHICAGO IL 60606-1080

MAILED
MAY 19 2011
OFFICE OF PETITIONS

In re Application of	:	
Cooper, et al.	:	
Application No. 13/027,521	:	ON PETITION
Deposited: February 15, 2011	:	
Attorney Docket No. 10000524-0002	:	

This is in response to the "PETITION TO ADD MATERIAL UNDER 37 CFR 1.57(a)", filed April 1, 2011, which is being treated as a petition under 37 CFR 1.53(e)(2).

Application papers in the above-identified application were deposited on February 15, 2011. However, on March 1, 2011, the Office of Patent Application Processing mailed applicants a "Notice of Incomplete Nonprovisional Application," notifying applicants that the application papers had not been accorded a filing date because the application was deposited without drawings. Applicants request that the application be accorded the filing date of February 15, 2011, based on a claim to priority to provisional application No. 61/338,124 and express incorporation by reference statement present in the specification on filing.

Petitioner's arguments and evidence have been considered. However, a review of the application confirms that, as filed, the application contained at least one method claim. MPEP 601.01(f) provides that:

> It has been USPTO practice to treat an application that contains at least one process or method claim as an application for which a drawing is not necessary for an understanding of the invention under 35 U.S.C. 113 (first sentence).

Thus, pursuant to § 601.01(f), a drawing is not considered essential for a filing date. The instant application is entitled to a filing date without drawings present in the application.

Accordingly, the Office should have granted the application a filing date and mailed a Notice of Omitted Items instead of a Notice of Incomplete Nonprovisional Application. As stated in MPEP 601.01(g) under the section entitled, "Application Entitled to a Filing Date," applicant may submit an amendment to include the inadvertently omitted portion of the drawing(s) pursuant to 37 CFR 1.57(a):

> [i]f an application was filed on or after September 21, 2004, and contains a claim under 37 CFR 1.55 for priority of a prior-filed foreign application, or a claim under 37 CFR 1.78 for the benefit of a prior-filed provisional, nonprovisional, or international application that was present on the filing date of the application, and the omitted portion of the drawing(s) was inadvertently omitted from the application and is completely contained in the prior-filed application[.]

To the extent the instant petition requests a filing date of February 15, 2011 with no drawings present in the application on filing, the petition is **GRANTED**.

Given the basis for granting this petition, the $400 petition fee has been refunded to Deposit Account No. 19-3140.

Pursuant to this decision, the application will be referred to Office of Patent Application Processing for:

- **correction of the filing date to February 15, 2011**;
- **for indication in Office records, as appropriate, that "0" sheets of drawings were present on filing** and
- **for issuance of a filing receipt.**

Telephone inquiries concerning this matter may be directed to Petitions Attorney Cliff Congo at (571) 272-3207.

Chris Bottorff
Petitions Examiner
Office of Petitions

Doc Code: PET.GREEN
Document Description: Petition for Green Tech Pilot

PTO/SB/420 (11-10)
Approved for use through 01/31/2011. OMB 0651-0062
U.S. Patent and Trademark Office; U. S. DEPARTMENT OF COMMERCE
Under the Paperwork Reduction Act of 1995, no persons are required to respond to a collection of information unless it displays a valid OMB control number.

PETITION TO MAKE SPECIAL UNDER THE GREEN TECHNOLOGY PILOT PROGRAM

Attorney Docket Number: 83163744	Application Number (if known): 13/027,532	Filing date: 2011-02-15
First Named Inventor: ALIREZA PEZHMAN SHIRVANIAN		
Title: BIPOLAR PLATES AND ELECTROCHEMICAL CELLS EMPLOYING THE SAME		

APPLICANT HEREBY REQUESTS TO PARTICIPATE IN THE GREEN TECHNOLOGY PILOT PROGRAM FOR THE ABOVE-IDENTIFIED APPLICATION. See Instruction Sheet on page 2.

This petition must be timely filed electronically using the USPTO electronic filing system, EFS-Web.

1. By filing this petition:

   Applicant is requesting early publication: Applicant hereby requests early publication under 37 CFR 1.219 and the publication fee set forth in 37 CFR 1.18(d) accompanies this request.

2. By filing this petition: applicant is agreeing to make an election without traverse in a telephonic interview and elect an invention that meets the eligibility requirements for the Green Technology Pilot Program, if the Office determines that the claims are not obviously directed to a single invention. See Instruction Sheet.

3. This request is accompanied by statements of special status for the eligibility requirement.

4. The application contains no more than three (3) independent claims and twenty (20) total claims.

5. The application does not contain any multiple dependent claims.

6. Other attachments: Status Statement for Petition to Make Special

Signature /Junqi Hang/	Date 2011-03-07
Name (Print/Typed) Junqi Hang	Registration Number 54,615

Note: *Signatures of all the inventors or assignees of record of the entire interest or their representative(s) are required in accordance with 37 CFR 1.33 and 11.18. Please see 37 CFR 1.4(d) for the form of the signature. If necessary, submit multiple forms for more than one signature see below*.*

☒ *Total of 1 forms are submitted.

The information is required to obtain or retain a benefit by the public which is to file (and by the USPTO to process) an application. Confidentiality is governed by 35 U.S.C. 122 and 37 CFR 1.11 and 1.14. This collection is estimated to take 12 hours to complete, including gathering, preparing, and submitting the completed application form to the USPTO. Time will vary depending upon the individual case. Any comments on the amount of time you require to complete this form and/or suggestions for reducing this burden, should be sent to the Chief Information Officer, U.S. Patent and Trademark Office, U.S. Department of Commerce, P.O. Box 1450, Alexandria, VA 22313-1450. DO NOT SEND FEES OR COMPLETED FORMS TO THIS ADDRESS. **SEND TO: Commissioner for Patents, P.O. Box 1450, Alexandria, VA 22313-1450.**

If you need assistance in completing the form, call 1-800-PTO-9199 and select option 2.

Under the Paperwork Reduction Act of 1995, no persons are required to respond to a collection of information unless it displays a valid OMB control number.

Instruction Sheet for Petition to Make Special Under the Green Technology Pilot Program

(Not to be Submitted to the USPTO)

The following is a summary of the requirements (for more information see the notices (i) "Pilot Program for Green Technologies Including Greenhouse Gas Reduction," (ii) "Elimination of Classification Requirement in the Green Technology Pilot Program," and (iii) "Expansion and Extension of the Green Technology Pilot Program," available on the USPTO web site at http://www.uspto.gov/patents/init_events/green_tech.jsp):

1) The application must be a non-reissue, non-provisional utility application filed under 35 U.S.C. 111 (a), or an international application that has entered the national stage in compliance with 35 U.S.C. 371, irrespective of the filing date of the application. Reexamination proceedings are excluded from this pilot program.

2) The application must contain three or fewer independent claims and twenty or fewer total claims. The application must not contain any multiple dependent claims. For an application that contains more than three independent claims or twenty total claims, or multiple dependent claims, applicant must file a preliminary amendment in compliance with 37 CFR 1.121 to cancel the excess claims and/or the multiple dependent claims at the time the petition to make special is filed.

3) The claims must be directed to a single invention that materially enhances the quality of the environment, or that materially contributes to: (1) the discovery or development of renewable energy resources; (2) the more efficient utilization and conservation of energy resources; or (3) green house gas emission reduction (see the eligibility requirements of sections II and III of the notice (i) cited above). The petition must include a statement that, if the USPTO determines that the claims are directed to multiple inventions (e.g., in a restriction requirement), applicant will agree to make an election without traverse in a telephonic interview, and elect an invention that meets the eligibility requirements in section II or III of the notice (i) cited above.

4) The petition to make special must be timely filed electronically using the USPTO electronic filing system, EFS-Web, and selecting the document description of "Petition for Green Tech Pilot" on the EFS-Web screen. Applicant should use form PTO/SB/420, which is available as a Portable Document Format (PDF) fillable form in EFS-Web and on the USPTO Web site.

5) The petition to make special must be filed at least one day prior to the date that a first Office action (which may be an Office action containing only a restriction requirement) appears in the Patent Application Information Retrieval (PAIR) system. Applicant may check the status of the application using PAIR.

6) The petition to make special must be accompanied by a request for early publication in compliance with 37 CFR 1.219 and the publication fee set forth in 37 CFR 1.18(d).

Privacy Act Statement

The **Privacy Act of 1974 (P.L. 93-579)** requires that you be given certain information in connection with your submission of the attached form related to a patent application or patent. Accordingly, pursuant to the requirements of the Act, please be advised that: (1) the general authority for the collection of this information is 35 U.S.C. 2(b)(2); (2) furnishing of the information solicited is voluntary; and (3) the principal purpose for which the information is used by the U.S. Patent and Trademark Office is to process and/or examine your submission related to a patent application or patent. If you do not furnish the requested information, the U.S. Patent and Trademark Office may not be able to process and/or examine your submission, which may result in termination of proceedings or abandonment of the application or expiration of the patent.

The information provided by you in this form will be subject to the following routine uses:

1. The information on this form will be treated confidentially to the extent allowed under the Freedom of Information Act (5 U.S.C. 552) and the Privacy Act (5 U.S.C 552a). Records from this system of records may be disclosed to the Department of Justice to determine whether disclosure of these records is required by the Freedom of Information Act.
2. A record from this system of records may be disclosed, as a routine use, in the course of presenting evidence to a court, magistrate, or administrative tribunal, including disclosures to opposing counsel in the course of settlement negotiations.
3. A record in this system of records may be disclosed, as a routine use, to a Member of Congress submitting a request involving an individual, to whom the record pertains, when the individual has requested assistance from the Member with respect to the subject matter of the record.
4. A record in this system of records may be disclosed, as a routine use, to a contractor of the Agency having need for the information in order to perform a contract. Recipients of information shall be required to comply with the requirements of the Privacy Act of 1974, as amended, pursuant to 5 U.S.C. 552a(m).
5. A record related to an International Application filed under the Patent Cooperation Treaty in this system of records may be disclosed, as a routine use, to the International Bureau of the World Intellectual Property Organization, pursuant to the Patent Cooperation Treaty.
6. A record in this system of records may be disclosed, as a routine use, to another federal agency for purposes of National Security review (35 U.S.C. 181) and for review pursuant to the Atomic Energy Act (42 U.S.C. 218(c)).
7. A record from this system of records may be disclosed, as a routine use, to the Administrator, General Services, or his/her designee, during an inspection of records conducted by GSA as part of that agency's responsibility to recommend improvements in records management practices and programs, under authority of 44 U.S.C. 2904 and 2906. Such disclosure shall be made in accordance with the GSA regulations governing inspection of records for this purpose, and any other relevant (*i.e.*, GSA or Commerce) directive. Such disclosure shall not be used to make determinations about individuals.
8. A record from this system of records may be disclosed, as a routine use, to the public after either publication of the application pursuant to 35 U.S.C. 122(b) or issuance of a patent pursuant to 35 U.S.C. 151. Further, a record may be disclosed, subject to the limitations of 37 CFR 1.14, as a routine use, to the public if the record was filed in an application which became abandoned or in which the proceedings were terminated and which application is referenced by either a published application, an application open to public inspection or an issued patent.
9. A record from this system of records may be disclosed, as a routine use, to a Federal, State, or local law enforcement agency, if the USPTO becomes aware of a violation or potential violation of law or regulation.

UNITED STATES PATENT AND TRADEMARK OFFICE

UNITED STATES DEPARTMENT OF COMMERCE
United States Patent and Trademark Office
Address: COMMISSIONER FOR PATENTS
P.O. Box 1450
Alexandria, Virginia 22313-1450
www.uspto.gov

APPLICATION NO.	FILING DATE	FIRST NAMED INVENTOR	ATTORNEY DOCKET NO.	CONFIRMATION NO.
13/027,532	02/15/2011	Alireza Pezhman Shirvanian	83163744 (FMC 3077 PUS)	6995

28395 7590 04/29/2011
BROOKS KUSHMAN P.C./FGTL
1000 TOWN CENTER
22ND FLOOR
SOUTHFIELD, MI 48075-1238

EXAMINER

ART UNIT	PAPER NUMBER
1726	

MAIL DATE	DELIVERY MODE
04/29/2011	PAPER

Please find below and/or attached an Office communication concerning this application or proceeding.

The time period for reply, if any, is set in the attached communication.

UNITED STATES PATENT AND TRADEMARK OFFICE

Commissioner for Patents
United States Patent and Trademark Office
P.O. Box 1450
Alexandria, VA 22313-1450,
www.uspto.gov

BROOKS KUSHMAN P.C./FGTL
1000 TOWN CENTER
22ND FLOOR
SOUTHFIELD MI 48075-1238

4/29/2011

In re Application of	:	
Shirvanian	:	DECISION ON PETITION
Application No. 13/027,532	:	TO MAKE SPECIAL UNDER
Filed: 2/15/2011	:	THE GREEN TECHNOLOGY
Attorney Docket No. **83163744 (FMC 3077 PUS)**	:	PILOT PROGRAM

This is a decision on the petition under 37 CFR 1.102, filed 3/7/2011, to make the above-identified application special under the pilot program for applications pertaining to Green Technologies as set forth in 74 Federal Register Notice 64666 (December 8, 2009) and amended by 75 Federal Register Notice 28554 (May 21, 2010) and 75 Federal Register Notice 69049 (November 10, 2010).

The petition is **GRANTED**.

A grantable petition to make an application special under 37 CFR 1.102 and the pilot program as set forth in 74 FR 64666 must be directed to a nonprovisional application filed under 35 USC 111(a) or be a national stage entry under 35 USC 371, exclusive of any reissue applications.

In order to qualify for special status, the following requirements must be met. 1) The application must have no more than 3 independent claims and no more than 20 total claims. 2) The application must not contain any multiple dependent claims. 3) The petition must state the basis for seeking special status, i.e., the claimed invention either: A) materially enhances the quality of the environment or B) materially contributes to: i) the discovery or development of renewable energy resources, ii) the more efficient utilization and conservation of energy resources, or iii) greenhouse gas emission reduction. 4) If the disclosure is not clear on its face that the claimed invention materially contributes under category (A) or (B), the petition must be accompanied by a statement by the applicant, assignee, or an attorney/agent registered to practice before the Office explaining how the materiality standard is met. 5) A statement that applicant will agree to make an election without traverse in a telephonic interview if a restriction requirement is made by the examiner. 6) The petition to make special must be filed electronically. 7) The petition must be filed at least one day prior to the date that a first Office Action appears in the Patent Application Information Retrieval (PAIR) system. 8) The petition must be accompanied by a

request for early publication in compliance with 37 CFR 1.219 and include the publication fee as set forth in 37 CFR 1.18(d).

The requirement for a fee for consideration of the petition to make special for applications pertaining to Green Technologies has been waived.

The instant petition complies with items 1 – 8 above. Accordingly, the above-identified application has been accorded "special" status.

Telephone inquires concerning this decision should be directed to Tom Dunn at 571-272-1171.

The application is being forwarded to the Technology Center Art Unit 1726 for action on the merits commensurate with this decision.

/Tom Dunn/

Tom Dunn
Quality Assurance Specialist
Technology Center 1700

Doc Code: PET.GREEN
Document Description: Petition for Green Tech Pilot

PTO/SB/420 (11-10)
Approved for use through 01/31/2011. OMB 0651-0062
U.S. Patent and Trademark Office; U. S. DEPARTMENT OF COMMERCE
Under the Paperwork Reduction Act of 1995, no persons are required to respond to a collection of information unless it displays a valid OMB control number.

PETITION TO MAKE SPECIAL UNDER THE GREEN TECHNOLOGY PILOT PROGRAM

Attorney Docket Number: 3304.010A	Application Number (if known):	Filing date: Herewith
First Named Inventor: Oliver SCHULTZ-WITTMANN et al.		
Title: FINE LINE METALIZATION OF PHOTOVOLTAIC DEVICES BY PARTIAL LIFT-OFF OF OPTICAL COATINGS		

APPLICANT HEREBY REQUESTS TO PARTICIPATE IN THE GREEN TECHNOLOGY PILOT PROGRAM FOR THE ABOVE-IDENTIFIED APPLICATION. See Instruction Sheet on page 2.

This petition must be timely filed electronically using the USPTO electronic filing system, EFS-Web.

1. By filing this petition:

   Applicant is requesting early publication: Applicant hereby requests early publication under 37 CFR 1.219 and the publication fee set forth in 37 CFR 1.18(d) accompanies this request.

2. By filing this petition: applicant is agreeing to make an election without traverse in a telephonic interview and elect an invention that meets the eligibility requirements for the Green Technology Pilot Program, if the Office determines that the claims are not obviously directed to a single invention. See Instruction Sheet.

3. This request is accompanied by statements of special status for the eligibility requirement.

4. The application contains no more than three (3) independent claims and twenty (20) total claims.

5. The application does not contain any multiple dependent claims.

6. Other attachments: Statement of Special Status Accompanying Petition

Signature Kevin P. Radigan	Date February 15, 2011
Name (Print/Typed) Kevin P. Radigan, Esq.	Registration Number 31,789

Note: *Signatures of all the inventors or assignees of record of the entire interest or their representative(s) are required in accordance with 37 CFR 1.33 and 11.18. Please see 37 CFR 1.4(d) for the form of the signature. If necessary, submit multiple forms for more than one signature, see below*.*

[X] *Total of 1 forms are submitted.

The information is required to obtain or retain a benefit by the public which is to file (and by the USPTO to process) an application. Confidentiality is governed by 35 U.S.C. 122 and 37 CFR 1.11 and 1.14. This collection is estimated to take 12 hours to complete, including gathering, preparing, and submitting the completed application form to the USPTO. Time will vary depending upon the individual case. Any comments on the amount of time you require to complete this form and/or suggestions for reducing this burden, should be sent to the Chief Information Officer, U.S. Patent and Trademark Office, U.S. Department of Commerce, P.O. Box 1450, Alexandria, VA 22313-1450. DO NOT SEND FEES OR COMPLETED FORMS TO THIS ADDRESS. **SEND TO: Commissioner for Patents, P.O. Box 1450, Alexandria, VA 22313-1450.**

If you need assistance in completing the form, call 1-800-PTO-9199 and select option 2.

UNITED STATES PATENT AND TRADEMARK OFFICE

UNITED STATES DEPARTMENT OF COMMERCE
United States Patent and Trademark Office
Address: COMMISSIONER FOR PATENTS
P.O. Box 1450
Alexandria, Virginia 22313-1450
www.uspto.gov

APPLICATION NO.	FILING DATE	FIRST NAMED INVENTOR	ATTORNEY DOCKET NO.	CONFIRMATION NO.
13/027,576	02/15/2011	Oliver SCHULTZ-WITTMAN	3304.010A	7062

23405 7590 03/15/2011
HESLIN ROTHENBERG FARLEY & MESITI PC
5 COLUMBIA CIRCLE
ALBANY, NY 12203

EXAMINER

ART UNIT	PAPER NUMBER
1721	

MAIL DATE	DELIVERY MODE
03/15/2011	PAPER

Please find below and/or attached an Office communication concerning this application or proceeding.

The time period for reply, if any, is set in the attached communication.

UNITED STATES PATENT AND TRADEMARK OFFICE

Commissioner for Patents
United States Patent and Trademark Office
P.O. Box 1450
Alexandria, VA 22313-1450
www.uspto.gov

HESLIN ROTHENBERG FARLEY & MESITI PC
5 COLUMBIA CIRCLE
ALBANY NY 12203

3/15/2011

In re Application of	:	
Schultz-Wittman	:	DECISION ON PETITION
Application No. 13/027,576	:	TO MAKE SPECIAL UNDER
Filed: 2/15/2011	:	THE GREEN TECHNOLOGY
Attorney Docket No. **3304.010A**	:	PILOT PROGRAM

This is a decision on the petition under 37 CFR 1.102, filed 2/15/2011, to make the above-identified application special under the pilot program for applications pertaining to Green Technologies as set forth in 74 Federal Register Notice 64666 (December 8, 2009) and amended by 75 Federal Register Notice 28554 (May 21, 2010) and 75 Federal Register Notice 69049 (November 10, 2010).

The petition is **GRANTED**.

A grantable petition to make an application special under 37 CFR 1.102 and the pilot program as set forth in 74 FR 64666 must be directed to a nonprovisional application filed under 35 USC 111(a) or be a national stage entry under 35 USC 371, exclusive of any reissue applications.

In order to qualify for special status, the following requirements must be met. 1) The application must have no more than 3 independent claims and no more than 20 total claims. 2) The application must not contain any multiple dependent claims. 3) The petition must state the basis for seeking special status, i.e., the claimed invention either: A) materially enhances the quality of the environment or B) materially contributes to: i) the discovery or development of renewable energy resources, ii) the more efficient utilization and conservation of energy resources, or iii) greenhouse gas emission reduction. 4) If the disclosure is not clear on its face that the claimed invention materially contributes under category (A) or (B), the petition must be accompanied by a statement by the applicant, assignee, or an attorney/agent registered to practice before the Office explaining how the materiality standard is met. 5) A statement that applicant will agree to make an election without traverse in a telephonic interview if a restriction requirement is made by the examiner. 6) The petition to make special must be filed electronically. 7) The petition must be filed at least one day prior to the date that a first Office Action appears in the Patent Application Information Retrieval (PAIR) system. 8) The petition must be accompanied by a request for early publication in compliance with 37 CFR 1.219 and include the publication fee as set forth in 37 CFR 1.18(d).

The requirement for a fee for consideration of the petition to make special for applications pertaining to Green Technologies has been waived.

The instant petition complies with items 1 – 8 above. Accordingly, the above-identified application has been accorded "special" status.

Telephone inquires concerning this decision should be directed to Tom Dunn at 571-272-1171.

The application is being forwarded to the Technology Center Art Unit 1721 for action on the merits commensurate with this decision.

/Tom Dunn/

Tom Dunn
Quality Assurance Specialist
Technology Center 1700

UNITED STATES PATENT AND TRADEMARK OFFICE

UNITED STATES DEPARTMENT OF COMMERCE
United States Patent and Trademark Office
Address: COMMISSIONER FOR PATENTS
P.O. Box 1450
Alexandria, Virginia 22313-1450
www.uspto.gov

APPLICATION NO.	FILING DATE	FIRST NAMED INVENTOR	ATTORNEY DOCKET NO.	CONFIRMATION NO.
13/027,592	02/15/2011	Junichi ONISHI	27311Z	7093

23389 7590 07/11/2011
SCULLY SCOTT MURPHY & PRESSER, PC
400 GARDEN CITY PLAZA
SUITE 300
GARDEN CITY, NY 11530

EXAMINER

ART UNIT	PAPER NUMBER
3736	

MAIL DATE	DELIVERY MODE
07/11/2011	PAPER

Please find below and/or attached an Office communication concerning this application or proceeding.

The time period for reply, if any, is set in the attached communication.

UNITED STATES PATENT AND TRADEMARK OFFICE

Commissioner for Patents
United States Patent and Trademark Office
P.O. Box 1450
Alexandria, VA 22313-1450
www.uspto.gov

SCULLY SCOTT MURPHY & PRESSER, PC
400 GARDEN CITY PLAZA
SUITE 300
GARDEN CITY NY 11530

In re Application of: ONISHI, JUNICHI Serial No.: 13/027592 Filed: February 15, 2011 Attorney Docket No. : 27311Z Title: BIOPSY SUPPORT SYSTEM	DECISION ON A REQUEST TO PARTICIPATE IN PATENT PROSECUTION HIGHWAY PROGRAM AND PETITION TO MAKE SPECIAL UNDER CFR 1.102(a)

This is a decision on the request to participate in the Patent Prosecution Highway (PPH) program and the petition under 37 CFR 1.102(a), filed June 20, 2011 to make the above-identified application special.

The request and petition are **granted**.

A grantable request to participate in the PPH pilot program and petition to make special require:

(1) The U.S. application must validly claim priority under 35 U.S.C. 119(a) to one or more applications filed in the JPO;
(2) Applicant must submit a copy of the allowable/patentable claim(s) from the JPO application(s) along with an English translation thereof and a statement that the English translation is accurate;
(3) All the claims in the U.S. application must sufficiently correspond or be amended to sufficiently correspond to the allowable/patentable claim(s) in the JPO application(s);
(4) Examination of the U.S. application has not begun;
(5) Applicant must submit a copy of all the office actions from each of the JPO application(s) containing the allowable/patentable claim(s) along with an English translation thereof and a statement that the English translation is accurate; and
(6) Applicant must submit an IDS listing the documents cited by the JPO examiner in the JPO office action along with copies of documents except U.S. patents or U.S. patent application publications.

In light of the petition being properly submitted, the request to participate in the PPH program and the petition comply with the above requirements. Accordingly, the above-identified application has been accorded "special" status.

Applicant is encouraged to cite and submit all relevant prior art references, if any, to facilitate examination in this application.

Response must be filed via EFS-Web. Telephone inquiries concerning this decision should be directed to Henry C. Yuen, at 571-272-4856.

Petition is **granted**.

/Henry C. Yuen/

Henry C. Yuen
Special Programs Examiner
Technology Center 3700
Tel: 571-272-4856

UNITED STATES PATENT AND TRADEMARK OFFICE

UNITED STATES DEPARTMENT OF COMMERCE
United States Patent and Trademark Office
Address: COMMISSIONER FOR PATENTS
P.O. Box 1450
Alexandria, Virginia 22313-1450
www.uspto.gov

APPLICATION NO.	FILING DATE	FIRST NAMED INVENTOR	ATTORNEY DOCKET NO.	CONFIRMATION NO.
13/027,644	02/15/2011	Han Wook Jung	HI-0631	7204

34610 7590 05/03/2011
KED & ASSOCIATES, LLP
P.O. Box 8638
Reston, VA 20195

EXAMINER

ART UNIT	PAPER NUMBER
2811	

MAIL DATE	DELIVERY MODE
05/03/2011	PAPER

Please find below and/or attached an Office communication concerning this application or proceeding.

The time period for reply, if any, is set in the attached communication.

UNITED STATES PATENT AND TRADEMARK OFFICE

Commissioner for Patents
United States Patent and Trademark Office
P.O. Box 1450
Alexandria, VA 22313-1450
www.uspto.gov

KED & ASSOCIATES, LLP
P.O. Box 8638
Reston VA 20195

In re Application of	
Han Wook JUNG	**: DECISION ON REQUEST TO**
Application No.: 13/027,644	**: PARTICIPATE IN THE PATENT**
Filed: 15 February 2011	**: PROSECUTION HIGHWAY**
Attorney Docket No.: HI-0631	**: PROGRAM AND PETITION**
For: LIGHT EMITTING DEVICE,	**: TO MAKE SPECIAL UNDER**
LIGHT EMITTING DEVICE	**: 37 CFR 1.102(a)**
PACKAGE, AND LIGHTING SYSTEM	

This is a decision on the request to participate in the Patent Prosecution Highway (PPH) program and the petition under 37 CFR 1.102(a), filed 06 April 2011, to make the above-identified application special.

The request and petition are **DISMISSED**.

Discussion

A grantable request to participate in the PPH program and petition to make special require:

1. The U.S. application is

    a. a Paris Convention application which either
        i. validly claims priority under 35 U.S.C. 119(a) and 37 CFR 1.55 to one or more applications filed in the KIPO, or
        ii. validly claims priority under 35 U.S.C. 119(a)/365(a) to a PCT application that contains no priority claims,

    or

    b. a national stage application under the PCT (an application which entered the national stage in the U.S. from a PCT international application after compliance with 35 U.S.C. 371), which PCT application
        i. validly claims priority under 35 U.S.C. 365(b) to an application filed in the KIPO, or
        ii. validly claims priority under 35 U.S.C. 365(b) to a PCT application that contains no priority claims, or
        iii. contains no priority claim,

    or

c. a so-called bypass application filed under 35 U.S.C. 111(a) which validly claims benefit under 35 U.S.C. 120 to a PCT application, which PCT application
    i. validly claims priority under 35 U.S.C. 365(b) to an application filed in the KIPO, or
    ii. validly claims priority under 35 U.S.C. 365(b) to a PCT application that contains no priority claims, or
    iii. contains no priority claim;

2. Applicant must submit a copy of:
    a. The allowable/patentable claim(s) from the KR application(s);
    b. An English translation of the allowable/patentable claim(s), and
    c. A statement that the English translation is accurate (if the claims were published in a language other than English);
3. Applicant must:
    a. Ensure that all the claims in the U.S. application must sufficiently correspond or be amended to sufficiently correspond to the allowable/patentable claim(s) in the KR application(s), and
    b. Submit a claims correspondence table in English;
4. Examination of the U.S. application has not begun;
5. Applicant must submit:
    a. A copy of all the office actions (which are relevant to patentability), excluding "Decision to Grant a Patent" from each of the KR application(s) containing the allowable/patentable claim(s);
    b. An English language translation of the KIPO office action; and
    c. A statement that the English translation is accurate (if the office actions are not in the English language);
6. Applicant must submit:
    a. An IDS listing the documents cited by the KIPO examiner in the KIPO office action (unless already filed in this application); and
    b. Copies of all the documents cited in the KIPO office action, except U.S. patents or U.S. patent application publications (unless already filed in this application);

This request to participate in the PPH program and petition is assessed as follows:

Requirements (1-2) and (4-6) above is considered to have been met. However the request to participate in the PPH program fails to meet requirement (3).

Regarding requirement (3), applicant has failed to ensure that all the claims in the U.S. application sufficiently correspond to the allowable/patentable claims in the KR application. For example only KR claim 13 is directed to a method of manufacture while US claim 13 is directed to a device. This is merely an example of how the claims do not correspond. All US claims must correspond to an allowed/patentable KR claim.

Applicant is given **ONE** opportunity within a time period of **ONE MONTH or THIRTY DAYS**, whichever is longer, from the mailing date of this decision to correct the deficiencies.

NO EXTENSION OF TIME UNDER 37 CFR 1.136 IS PERMITTED. If the deficiencies are not corrected with the time period given, the application will await action in its regular turn.

Response must be filed via the Electronic Filing System (EFS) using the document description: Petition to make special under Patent Pros Hwy. Any preliminary amendments and IDS submitted with the PPH documents must be separately indexed as a preliminary amendment and IDS, respectively.

Telephone inquiries concerning this decision should be directed to Lee W. Young at (571) 272-4549.

All other inquiries concerning the examination or status of the application is accessible in the PAIR system at http://www.uspto.gov/ebc.index.html.

Lee W. Young
TQAS
Technology Center 2800 – Semiconductors
Electrical & Optical Systems & Components

Doc Code: PET.GREEN
Document Description: Petition for Green Tech Pilot

PTO/SB/420 (03-11)

PETITION TO MAKE SPECIAL UNDER THE GREEN TECHNOLOGY PILOT PROGRAM

Attorney Docket Number: HI-0631	Application Number (if known): 13/027,644	Filing date: February 15, 2011

First Named Inventor: Han Wook JUNG

Title: LIGHT EMITTING DEVICE, LIGHT EMITTING DEVICE PACKAGE, AND LIGHTING SYSTEM

APPLICANT HEREBY REQUESTS TO PARTICIPATE IN THE GREEN TECHNOLOGY PILOT PROGRAM FOR THE ABOVE-IDENTIFIED APPLICATION. See Instruction Sheet on page 2.

This petition must be timely filed electronically using the USPTO electronic filing system, EFS-Web.

1. By filing this petition:

   Applicant is requesting early publication: Applicant hereby requests early publication under 37 CFR 1.219 and the publication fee set forth in 37 CFR 1.18(d) accompanies this request.

2. By filing this petition: applicant is agreeing to make an election without traverse in a telephonic interview and elect an invention that meets the eligibility requirements for the Green Technology Pilot Program, if the Office determines that the claims are not obviously directed to a single invention. See Instruction Sheet.

3. This request is accompanied by statements of special status for the eligibility requirement.

4. The application contains no more than three (3) independent claims and twenty (20) total claims.

5. The application does not contain any multiple dependent claims.

6. Other attachments: _____

Signature	Date June 7, 2011
Name (Print/Typed) Daniel Y.J. Kim	Registration Number 36,168

Note: Signatures of all the inventors or assignees of record of the entire interest or their representative(s) are required in accordance with 37 CFR 1.33 and 11.18. Please see 37 CFR 1.4(d) for the form of the signature. If necessary, submit multiple forms for more than one signature, see below.*

☐ *Total of 2 forms are submitted.

If you need assistance in completing the form, call 1-800-PTO-9199 and select option 2.

Docket No.: **HI-0631** PATENT

IN THE UNITED STATES PATENT AND TRADEMARK OFFICE

In re Application of		Confirmation No.:	**7204**
Han Wook JUNG		Group Art Unit:	**2811**
Serial No.:	**13/027,644**	Examiner:	**To Be Assigned**
Filed:	**February 15, 2011**	Customer No.:	**34610**

For: **LIGHT EMITTING DEVICE, LIGHT EMITTING DEVICE PACKAGE, AND LIGHTING SYSTEM**

STATEMENT OF SPECIAL STATUS FOR ELIGIBILITY UNDER THE GREEN TECHNOLOGY PILOT PROGRAM

U.S. Patent and Trademark Office
Customer Service Window, **MAIL STOP PETITIONS**
Randolph Building
401 Dulany Street
Alexandria, Virginia 22314

Sir:

Special status is sought under 37 CFR §1.102 because the invention materially contributes to the more efficient utilization and conservation of energy resources.

Respectfully submitted,
KED & ASSOCIATES, LLP

Daniel Y.J. Kim
Registration No. 36,186

Correspondence Address:
P.O. Box 8638
Reston, VA 20195
703 766-3777 DYK/dak

Date: June 7, 2011

Please direct all correspondence to Customer Number 34610

Q:\Documents\2019-1190\283007

UNITED STATES PATENT AND TRADEMARK OFFICE

UNITED STATES DEPARTMENT OF COMMERCE
United States Patent and Trademark Office
Address: COMMISSIONER FOR PATENTS
P.O. Box 1450
Alexandria, Virginia 22313-1450
www.uspto.gov

APPLICATION NO.	FILING DATE	FIRST NAMED INVENTOR	ATTORNEY DOCKET NO.	CONFIRMATION NO.
13/027,644	02/15/2011	Han Wook Jung	HI-0631	7204

34610 7590 06/21/2011
KED & ASSOCIATES, LLP
P.O. Box 8638
Reston, VA 20195

EXAMINER

ART UNIT	PAPER NUMBER
2811	

MAIL DATE	DELIVERY MODE
06/21/2011	PAPER

Please find below and/or attached an Office communication concerning this application or proceeding.

The time period for reply, if any, is set in the attached communication.

UNITED STATES PATENT AND TRADEMARK OFFICE

Commissioner for Patents
United States Patent and Trademark Office
P.O. Box 1450
Alexandria, VA 22313-1450
www.uspto.gov

KED & ASSOCIATES, LLP
P.O. Box 8638
Reston VA 20195

In re Application of	:	
Han Wook JUNG	:	DECISION ON PETITION
Application No. 13/027,644	:	TO MAKE SPECIAL UNDER
Filed: February 15, 2011	:	THE GREEN TECHNOLOGY
Attorney Docket No. HI-0631	:	PILOT PROGRAM

This is a decision on the petition under 37 CFR 1.102, filed on June 07, 2011, to make the above-identified application special under the pilot program for applications pertaining to Green Technologies as set forth 74 Federal Register Notice 64666 (December 8, 2009) and amended by 75 Federal Register Notice 28554 (May 21, 2010) and 75 Federal Register Notice 69049 (November 10, 2010).

The petition is **GRANTED**.

A grantable petition to make an application special under 37 CFR 1.102 and the pilot program as set forth in 74 FR 64666 must be directed to a nonprovisional application filed under 35 USC 111(a) or be a national stage entry under 35 USC 371, exclusive of any reissue applications.

In order to qualify for special status, the following requirements must be met. 1) The application must have no more than 3 independent claims and no more than 20 total claims. 2) The application must not contain any multiple dependent claims. 3) The petition must state the basis for seeking special status, i.e., the claimed invention either: A) materially enhances the quality of the environment or B) materially contributes to: i) the discovery or development of renewable energy resources, ii) the more efficient utilization and conservation of energy resources, or iii) greenhouse gas emission reduction. 4) If the disclosure is not clear on its face that the claimed invention materially contributes under category (A) or (B), the petition must be accompanied by a statement by the applicant, assignee, or an attorney/agent registered to practice before the Office explaining how the materiality standard is met. 5) A statement that applicant will agree to make an election without traverse in a telephonic interview if a restriction requirement is made by the examiner. 6) The petition to make special must be filed electronically. 7) The petition must be filed at least one day prior to the date that a first Office Action appears in the Patent Application Information Retrieval (PAIR) system. 8) The petition must be accompanied by a request for early publication in compliance with 37 CFR 1.219 and include the publication fee as set forth in 37 CFR 1.18(d).

The requirement for a fee for consideration of the petition to make special for applications pertaining to Green Technologies has been waived.

The instant petition complies with items 1 – 8 above. Accordingly, the above-identified application has been accorded "special" status.

Telephone inquires concerning this decision should be directed to Lee W. Young at 571-272-4549.

The application is being forwarded to the Technology Center Art Unit 2811 for action on the merits commensurate with this decision.

Lee W. Young
Quality Assurance Specialist
Technology Center 2800

UNITED STATES PATENT AND TRADEMARK OFFICE

UNITED STATES DEPARTMENT OF COMMERCE
United States Patent and Trademark Office
Address: COMMISSIONER FOR PATENTS
P.O. Box 1450
Alexandria, Virginia 22313-1450
www.uspto.gov

APPLICATION NO.	FILING DATE	FIRST NAMED INVENTOR	ATTORNEY DOCKET NO.	CONFIRMATION NO.
13/027,654	02/15/2011	Theodore J. Myers	091721-0166	7226

23524 7590 05/10/2011
FOLEY & LARDNER LLP
150 EAST GILMAN STREET
P.O. BOX 1497
MADISON, WI 53701-1497

EXAMINER

ART UNIT	PAPER NUMBER
2473	

MAIL DATE	DELIVERY MODE
05/10/2011	PAPER

Please find below and/or attached an Office communication concerning this application or proceeding.

The time period for reply, if any, is set in the attached communication.

UNITED STATES PATENT AND TRADEMARK OFFICE

Commissioner for Patents
United States Patent and Trademark Office
P.O. Box 1450
Alexandria, VA 22313-1450
www.uspto.gov

FOLEY & LARDNER LLP
150 EAST GILMAN STREET
P.O. BOX 1497
MADISON WI 53701-1497

MAILED

MAY 10 2011

DIRECTOR OFFICE
TECHNOLOGY CENTER 2400

In re Application of:
MYERS, THEODORE J. et al.
Serial No.: 13/027,654
Filed: February 15, 2011
Docket Number: 091721-0166
Title: HANDOVER PROCESSING IN MULTIPLE ACCESS POINT DEPLOYMENT SYSTEM

DECISION ON PETITION TO MAKE SPECIAL FOR NEW APPLICATION UNDER 37 C.F.R. § 1.102

This is a decision on the petition filed on February 15, 2011, to make the above-identified application special for accelerated examination procedure in accordance with 37 C.F.R. § 1.102(c)(2).

The petition to make the application special is GRANTED.

The application is eligible for accelerated examination and the petition complies with the conditions for granting the application special status pursuant to M.P.E.P. §708.02(a) and to the "Change to Practice for Petitions in Patent Applications to Make Special and for Accelerated Examination" published June 26, 2006, in the Federal Register. (71 Fed. Reg. 36323).

The prosecution of the instant application will be conducted expeditiously according to the following guidelines.

1. The application will be docketed to an examiner and taken up for action within two weeks of the date of this decision.

2. Restriction Practice:
   If the examiner determines that the claims are not directed to a single invention, a telephone request to elect one single invention will be made pursuant to M.P.E.P. §812.01. As a prerequisite to the grant of this petition, the applicant has agreed to make an oral election, by telephone, without traverse. If the applicant refuses to make an election without traverse, or the examiner cannot reach the applicant after a reasonable

effort, the examiner will treat the first claimed invention (invention defined by claim 1) as having being constructively elected without traverse for examination.

3. Office action:
If it is determined that, after appropriate consultation, there is a potential rejection or any other issue to be addressed, the examiner will telephone the applicant and arrange an interview to discuss and resolve the issue. An Office action, other than a Notice of Allowance and Fee(s) Due (Notice of Allowance), will not be issued unless either: 1) an interview was conducted but did not result in agreed to action that places the application in condition for allowance, or, 2) a determination is made that an interview would be unlikely to result in the application being placed in condition for allowance, and 3) an internal conference has been held to review any rejection of any claim.

4. Time for Reply:
An Office action other than a Notice of Allowance or a final Office action will set a shortened statutory period of one month or thirty days, whichever is longer, for reply with no extension of time available under 37 C.F.R. §1.136(a). Failure to timely file a reply within this non-extendible period for reply will result in the abandonment of the application.

5. Reply by Applicant:
A timely reply to an Office action other than the Notice of Allowance must be submitted electronically via EFS or EFS-web and limited to addressing the rejections, objections and requirement made. Any amendment that attempts to: 1) add claims which would result in more than three pending independent claims or more than twenty pending total claims; 2) present claims not encompassed by the pre-examination search or an updated accelerated examination support document; or 3) present claims that are directed a non-elected invention or an invention other than that previously claimed and examined in the application, will be treated as not fully responsive and will not be entered.

For any amendment to the claims (including any new claim) that is not encompassed by the accelerated examination support document, applicant must provide an updated accelerated examination support document that encompasses the amended or new claims at the time of filing of the amendment.

To proceed expeditiously with the examination, it is recommended that a reply with amendments made to any claim or with any new claim being added be accompanied by an updated accelerated examination support document or a statement explaining how the amended or new claim is supported by the original accelerated examination support document.

6. Information Disclosure Statement (IDS):
Any IDS filed during prosecution must be submitted electronically via EFS or EFS-web, accompanied by an updated accelerated examination support document, and be in compliance with 37 C.F.R. §1.97 and §1.98.

7. Post-Allowance Processing:
   To expedite processing of the allowed application into a patent, the applicant must: 1) pay the required fees within one month of the date of the Notice of Allowance, and 2) not file any post allowance papers not required by the Office. In no event may the issue fee be paid and accepted later than three months from the date of the Notice of Allowance.

8. After-Final and Appeal Procedures:
   To expedite prosecution, after receiving the final Office action, applicant must: 1) promptly file a notice of appeal, an appeal brief and appeal fees; and 2) not request a pre-appeal brief conference.

   Any amendment, affidavit or other evidence filed after final Office action must comply with applicable rules and the requirements outlined in numbered paragraphs 5 and 6 above.

   On appeal, the application will proceed according to normal appeal procedures. After appeal, the application will again be treated special.

9. Proceedings Outside the Normal Examination Process:
   If the application becomes involved in a proceeding that is outside the normal examination process (e.g., a secrecy order, national security review, interference proceeding, petitions under 37 C.F.R. §1.181, §1.182 or §1.183), the application will be treated special before and after such proceeding.

10. Final Disposition:
    The twelve-month goal of this accelerated examination procedure ends with a final disposition. The mailing of a final Office action, a Notice of Allowance, the filing of a Notice of Appeal, or the filing of a Request for Continued Examination (RCE) is the final disposition. However, the application retains its special status after the filing of an RCE.

If, during prosecution, a paper is not filed electronically using EFS-web, a reply is filed but is not fully responsive, the application is involved in an appeal or a proceeding outside normal examination process, the application will still be examined expeditiously, however, the final disposition may occur more than twelve months from the filing of the application.

Any inquiry regarding this decision should be directed to the undersigned at (571) 272-3126.

/Chau Nguyen/

Chau T. Nguyen
Quality Assurance Specialist
Technology Center 2400
Network, Multiplexing, Cable and Security

UNITED STATES PATENT AND TRADEMARK OFFICE

Commissioner for Patents
United States Patent and Trademark Office
P.O. Box 1450
Alexandria, VA 22313-1450
www.uspto.gov

MAILED
NOV 08 2011
OFFICE OF PETITIONS

FULBRIGHT & JAWORSKI, LLP
666 FIFTH AVE.
NEW YORK NY 10103-3198

Applicant: Wolfgang Thiele, et al.
Appl. No.: 13/027,672
Filing Date: February 15, 2011
Title: METHOD FOR PRODUCING PEROXODISULFATES IN AQUEOUS SOLUTION
Attorney Docket: HUBR.P1302.C1
Pub. No.: US 20110132771 A1
Pub. Date: June 9, 2011

This is a decision on the request for a corrected patent application publication under 37 CFR 1.221(b), received on August 8, 2011, for the above-identified application.

The request is DISMISSED.

Applicant requests that the application be republished because the patent application publication contains an error in claim 15 and in the specification.

37 CFR 1.221 (b) is applicable "only when the Office makes a material mistake which is apparent from Office records.... Any request for a corrected publication or revised patent application publication other than provided as provided in paragraph (a) of this section must be filed within two months from the date of the patent application publication. This period is not extendable." A material mistake must affect the public's ability to appreciate the technical disclosure of the patent application publication, to determine the scope of the patent application publication, or to determine the scope of the provisional rights that an applicant may seek to enforce upon issuance of a patent. [1]

The errors noted by requestor in claim 15 and in the specification may be Office mistakes, but are not material Office errors under 37 CFR 1.221(b). The mistakes are minor typographical errors and do not affect the public's ability to appreciate the technical disclosure of the patent application publication, or determine the scope of the patent application publication or determine the scope of the provisional rights that an applicant may seek to enforce upon issuance of a patent. See MPEP 1130B.

The applicant is advised that a "request for republication of an application previously published" may be filed under 37 CFR 1.221 (a). Such a request for republication "must include a copy of

[1] Changes to Implement Eighteen-Month Publication of Patent Applications, 65 FR 57023, 57038 (Sept. 20, 2000), 1239, Off. Gaz. Pat. Office Notices 63, 75 (Oct. 10, 2000) (final rule).

the application compliance with the Office's electronic filing system requirements and be accompanied by the publication fee set forth in § 1.18 (d) and the processing fee set forth in § 1.17 (i)." If the request for republication does not comply with the electronic filing system requirements, the republication will not take place and the publication fee set forth in § 1.18 (d) will be refunded. The processing fee will be retained.

A guide for filing a request for a Pre-Grant Publication, such as a request for republication, may be found on the link below:

http://www.uspto.gov/patents/process/file/efs/guidance/index.jsp

http://www.uspto.gov/ebc/portal/efs/pgpub_quickstart.pdf

Any request for republication under 37 CFR 1.221(a), must be submitted via the EFS system, as a "Pre-Grant Publication".

Inquiries relating to this matter may be directed to Karen Creasy at (571) 272-3208.

/Christopher Bottorff/

Christopher Bottorff
Petitions Examiner
Office of Petitions

PTO/SB/20PCT-JP (05-10)
Approved for use through 01/31/2012. OMB 0651-0058
U.S. Patent and Trademark Office; U. S. DEPARTMENT OF COMMERCE
Under the Paperwork Reduction Act of 1995, no persons are required to respond to a collection of information unless it displays a valid OMB control number.

REQUEST FOR PARTICIPATION IN THE PATENT COOPERATION TREATY - PATENT PROSECUTION HIGHWAY (PCT-PPH) PILOT PROGRAM BETWEEN THE JAPAN PATENT OFFICE (JPO) AND THE USPTO

Application No:	13/027,690	Filing date:	2011-02-15
First Named Inventor:	Toshiyuki HIRANO		
Title of the Invention:	WIND TURBINE BLADE AND WIND TURBINE GENERATOR USING THE SAME		

THIS REQUEST FOR PARTICIPATION IN THE PCT-PPH PILOT PROGRAM ALONG WITH THE REQUIRED DOCUMENTS MUST BE SUBMITTED VIA EFS-WEB. INFORMATION REGARDING EFS-WEB IS AVAILABLE AT HTTP://WWW.USPTO.GOV/EBC/EFS_HELP.HTML

APPLICANT HEREBY REQUESTS PARTICIPATION IN THE PCT-PPH PROGRAM AND PETITIONS TO MAKE THE ABOVE-IDENTIFIED APPLICATION SPECIAL UNDER THE PCT-PPH PROGRAM.

The above-identified application is (1) a national stage entry of the corresponding PCT application, or (2) a national stage entry of another PCT application which claims priority to the corresponding PCT application, or (3) a national application that claims domestic/ foreign priority to the corresponding PCT application, or (4) a national application which forms the basis for the priority claim in the corresponding PCT application, or (5) a continuing application of a U.S. application that satisfies one of (1) to (4) above, or (6) a U.S. application that claims domestic benefit to a U.S. provisional application which forms the basis for the priority claim in the corresponding PCT application.

The corresponding PCT application number(s) is/are: PCT/JP2010/070797

The international date of the corresponding PCT application(s) is/are: 2010-11-22

I. List of Required Documents:

a. **A copy of the latest international work product (WO/ISA, WO/IPEA, or IPER) in the above-identified corresponding PCT application(s)**

☑ Is attached.

☐ Is not attached because the document is already in the U.S. application.

b. **A copy of all claims which were indicated as having novelty, inventive step and industrial applicability in the above-identified corresponding PCT application(s).**

☐ Is attached.

☑ Is not attached because the document is already in the U.S. application.

c. **English translations of the documents in a. and b. above are attached (if the documents are not in the English language). A statement that the English translation is accurate is attached for the document in b. above.**

This collection of information is required by 35 U.S.C. 119, 37 CFR 1.55, and 37 CFR 1.102(d). The information is required to obtain or retain a benefit by the public, which is to file (and by the USPTO to process) an application. Confidentiality is governed by 35 U.S.C. 122 and 37 CFR 1.11 and 1.14. This collection is estimated to take 2 hours to complete, including gathering, preparing, and submitting the completed application form to the USPTO. Time will vary depending upon the individual case. Any comments on the amount of time you require to complete this form and/or suggestions for reducing this burden should be sent to the Chief Information Officer, U.S. Patent and Trademark Office, U.S. Department of Commerce, P.O. Box 1450, Alexandria, VA 22313-1450. DO NOT SEND FEES OR COMPLETED FORMS TO THIS ADDRESS.

Approved for use through 01/31/2012. OMB 0651-0058
U.S.Patent and Trademark Office; U.S. DEPARTMENT OF COMMERCE

Under the Paperwork Reduction Act of 1995, no persons are required to respond to a collection of information unless it displays a valid OMB control number.

REQUEST FOR PARTICIPATION IN THE PCT-PPH PILOT PROGRAM BETWEEN THE JPO AND THE USPTO

(continued)

Application No.:	13/027,690
First Named Inventor:	Toshiyuki HIRANO

d. **(1) An information disclosure statement listing the documents cited in the international work products (ISR, WO/ISA, WO/IPEA, IPER) of the corresponding PCT application.**

☐ Is attached

☑ Has already been filed in the above-identified U.S. application on April 11, 2011

(2) Copies of all documents (except) for U.S. patents or U.S. patent application publications)

☐ Are attached.

☑ Have already been filed in the above-identified U.S. application on April 11, 2011

II. Claims Correspondence Table:

Claims in US Application	Patentable Claims in the corresponding PCT Application	Explanation regarding the correspondence
1	1	Identical
2	2	Identical
3	3	Substantially Identical-dependent from claim 1
4	4	Substantially Identical-dependent from claim 1
5	5	Identical
6	6	Substantially Identical-dependent from claim 1

III. All the claims in the US application sufficiently correspond to the patentable claims in the corresponding PCT application.

Signature /Manabu Kanesaka/	Date 06/30/2011
Name (Print/Typed) Manabu Kanesaka	Registration Number 31,467

Privacy Act Statement

The **Privacy Act of 1974 (P.L. 93-579)** requires that you be given certain information in connection with your submission of the attached form related to a patent application or patent. Accordingly, pursuant to the requirements of the Act, please be advised that: (1) the general authority for the collection of this information is 35 U.S.C. 2(b)(2); (2) furnishing of the information solicited is voluntary; and (3) the principal purpose for which the information is used by the U.S. Patent and Trademark Office is to process and/or examine your submission related to a patent application or patent. If you do not furnish the requested information, the U.S. Patent and Trademark Office may not be able to process and/or examine your submission, which may result in termination of proceedings or abandonment of the application or expiration of the patent.

The information provided by you in this form will be subject to the following routine uses:

1. The information on this form will be treated confidentially to the extent allowed under the Freedom of Information Act (5 U.S.C. 552) and the Privacy Act (5 U.S.C 552a). Records from this system of records may be disclosed to the Department of Justice to determine whether disclosure of these records is required by the Freedom of Information Act.
2. A record from this system of records may be disclosed, as a routine use, in the course of presenting evidence to a court, magistrate, or administrative tribunal, including disclosures to opposing counsel in the course of settlement negotiations.
3. A record in this system of records may be disclosed, as a routine use, to a Member of Congress submitting a request involving an individual, to whom the record pertains, when the individual has requested assistance from the Member with respect to the subject matter of the record.
4. A record in this system of records may be disclosed, as a routine use, to a contractor of the Agency having need for the information in order to perform a contract. Recipients of information shall be required to comply with the requirements of the Privacy Act of 1974, as amended, pursuant to 5 U.S.C. 552a(m).
5. A record related to an International Application filed under the Patent Cooperation Treaty in this system of records may be disclosed, as a routine use, to the International Bureau of the World Intellectual Property Organization, pursuant to the Patent Cooperation Treaty.
6. A record in this system of records may be disclosed, as a routine use, to another federal agency for purposes of National Security review (35 U.S.C. 181) and for review pursuant to the Atomic Energy Act (42 U.S.C. 218(c)).
7. A record from this system of records may be disclosed, as a routine use, to the Administrator, General Services, or his/her designee, during an inspection of records conducted by GSA as part of that agency's responsibility to recommend improvements in records management practices and programs, under authority of 44 U.S.C. 2904 and 2906. Such disclosure shall be made in accordance with the GSA regulations governing inspection of records for this purpose, and any other relevant (*i.e.*, GSA or Commerce) directive. Such disclosure shall not be used to make determinations about individuals.
8. A record from this system of records may be disclosed, as a routine use, to the public after either publication of the application pursuant to 35 U.S.C. 122(b) or issuance of a patent pursuant to 35 U.S.C. 151. Further, a record may be disclosed, subject to the limitations of 37 CFR 1.14, as a routine use, to the public if the record was filed in an application which became abandoned or in which the proceedings were terminated and which application is referenced by either a published application, an application open to public inspection or an issued patent.
9. A record from this system of records may be disclosed, as a routine use, to a Federal, State, or local law enforcement agency, if the USPTO becomes aware of a violation or potential violation of law or regulation.

IN THE UNITED STATES PATENT AND TRADEMARK OFFICE

In re Application of	:	
	:	Confirmation No. 7292
Toshiyuki HIRANO et al.	:	
	:	
U.S. Patent Application No.: 13/027,690	:	Group Art Unit: 1746
	:	
Filed: February 15, 2011	:	

For: **WIND TURBINE BLADE AND WIND TURBINE GENERATOR USING THE SAME**

SUPPLEMENTAL EXPLANATION FOR CLAIM 6

Claims 1-5 are substantially identical to the claims 1-5 in the corresponding PCT Application No. PCT/JP2010/070797, which has received a determination of allowable claims in a Written Opinion from the ISA (JPO). Claim 6 is also substantially identical to the claim 6 in the corresponding PCT Application. Even though the ISA did not indicate claim 6 as allowable, Applicants hereby request examination for claim 6 under the PPH program along with claims 1-5 since claim 6 depends from claim 1.

To the extent necessary, a petition for an extension of time under 37 C.F.R. 1.136 is hereby made. Please charge any shortage in fees due in connection with the filing of this paper, including extension of time fees, to Deposit Account 11-0219 and please credit any excess fees to such deposit account.

Respectfully submitted,

KANESAKA BERNER & PARTNERS

Manabu Kanesaka
Registration No.31,467

1700 Diagonal Road, Suite 310
Alexandria, Virginia 22314
(703) 519-9785
Facsimile: (703) 519-7769
Date: June 28, 2011

UNITED STATES PATENT AND TRADEMARK OFFICE

UNITED STATES DEPARTMENT OF COMMERCE
United States Patent and Trademark Office
Address: COMMISSIONER FOR PATENTS
P.O. Box 1450
Alexandria, Virginia 22313-1450
www.uspto.gov

APPLICATION NO.	FILING DATE	FIRST NAMED INVENTOR	ATTORNEY DOCKET NO.	CONFIRMATION NO.
13/027,690	02/15/2011	Toshiyuki HIRANO	TMP-062	7292

32628 7590 07/11/2011
KANESAKA BERNER AND PARTNERS LLP
1700 DIAGONAL RD
SUITE 310
ALEXANDRIA, VA 22314-2848

EXAMINER

ART UNIT	PAPER NUMBER
3745	

MAIL DATE	DELIVERY MODE
07/11/2011	PAPER

Please find below and/or attached an Office communication concerning this application or proceeding.

The time period for reply, if any, is set in the attached communication.

UNITED STATES PATENT AND TRADEMARK OFFICE

Commissioner for Patents
United States Patent and Trademark Office
P.O. Box 1450
Alexandria, VA 22313-1450
www.uspto.gov

KANESAKA BERNER AND PARTNERS LLP
1700 DIAGONAL RD
SUITE 310
ALEXANDRIA, VA 22314-2848

In re Application of:
JIMENEZ, OMAR F.
Serial No.: 13/027690
Filed: February 15, 2011
Attorney Docket No. : TMP-062
Title: WIND TURBINE BLADE AND WIND TURBINE GENERATOR USING THE SAME

DECISION ON A REQUEST TO PARTICIPATE IN PATENT PCT/PROSECUTION HIGHWAY PROGRAM AND PETITION TO MAKE SPECIAL UNDER CFR 1.102(a)

This is a decision on the request to participate in the Patent Prosecution Highway (PPH) program and the petition under 37 CFR 1.102(a), filed June 30, 2011 to make the above-identified application special.

The request and petition are **granted.**

A grantable request to participate in the PPH pilot program and petition to make special require:

(1) The U.S. application must validly claim priority under 35 U.S.C. 119(a) to one or more PCT applications filed in the JPO, EPO, KIPO, or USPTO;
(2) Applicant must submit a copy of the allowable/patentable claim(s) from the PCT application(s) latest international work product (the written opinion or the IPER) along with an English translation thereof and a statement that the English translation is accurate;
(3) All the claims in the U.S. application must sufficiently correspond or be amended to sufficiently correspond to the allowable/patentable claim(s) in the PCT application(s);
(4) Examination of the U.S. application has not begun;
(5) Applicant must submit a copy of the latest international work product from the PCT application containing the allowable/patentable claim(s) along with an English translation thereof and a statement that the English translation is accurate; and
(6) Applicant must submit an IDS listing the documents cited by the PCT examiner in the international work product along with copies of documents except U.S. patents or U.S. patent application publications.

In light of the petition being properly submitted, the request to participate in the PPH program and the petition comply with the above requirements. Accordingly, the above-identified application has been accorded "special" status.

The applicant is encouraged to cite and submit all relevant prior art references, if any, to facilitate examination in this application.

Other inquiries concerning the examination or status of the application should be directed to Stephen Hepperle, the SPE of Art Unit 3753 at 571-272-4913 for Class 137/115 and also accessible in the PAIR system at http://www.uspto.gov/ebc.index.html.

All other inquiries concerning the examination or status of the application should be directed to the Patent Application Information Retrieval (PAIR) system.

This application will be forwarded and docketed to an examiner for action on the merits commensurate with this decision.

Telephone inquiries concerning this decision should be directed to Henry C. Yuen, at 571-272-4856.

The petition is **granted.**

/Henry C. Yuen/

Henry C. Yuen, Special Programs Examiner
Technology Center 3700 – Mechanical Engineering,
Manufacturing and Products
571-272-4856

UNITED STATES PATENT AND TRADEMARK OFFICE

Commissioner for Patents
United States Patent and Trademark Office
P.O. Box 1450
Alexandria, VA 22313-1450
www.uspto.gov

OBLON, SPIVAK, MCCLELLAND
MAIER & NEUSTADT, L.L.P.
1940 DUKE STREET
ALEXANDRIA VA 22314

MAILED
SEP 27 2011
OFFICE OF PETITIONS

In re Application of	:	
SCHWALM, et al	:	
Application No. 13/027,696	:	DECISION ON PETITION
Filed: February 7, 2008	:	
Attorney Docket No. 852263.435	:	

This is a decision on the petition under 37 CFR 1.182, filed August 30, 2011, to change the order of the names of the inventors.

The petition is **GRANTED**.

Office records have been corrected to reflect the change in the order of the named inventors. A corrected Filing Receipt, which sets forth the desired order of the named inventors, accompanies this decision on petition.

The required petition fee under 37 CFR 1.182 has been received.

This application is being referred to Technology Center AU 1761 for further processing.

Telephone inquiries regarding this decision should be directed to the undersigned at (571) 272-6735.

Thurman Page
Petitions Examiner
Office of Petitions

ATTACHMENT: Corrected Filing Receipt

UNITED STATES PATENT AND TRADEMARK OFFICE

UNITED STATES DEPARTMENT OF COMMERCE
United States Patent and Trademark Office
Address: COMMISSIONER FOR PATENTS
P.O. Box 1450
Alexandria, Virginia 22313-1450
www.uspto.gov

APPLICATION NUMBER	FILING or 371(c) DATE	GRP ART UNIT	FIL FEE REC'D	ATTY.DOCKET.NO	TOT CLAIMS	IND CLAIMS
13/027,696	02/15/2011	1761	1740	375825US99	14	3

CONFIRMATION NO. 7303

CORRECTED FILING RECEIPT

22850
OBLON, SPIVAK, MCCLELLAND MAIER & NEUSTADT, L.L.P.
1940 DUKE STREET
ALEXANDRIA, VA 22314

OC000000049898974

Date Mailed: 09/19/2011

Receipt is acknowledged of this non-provisional patent application. The application will be taken up for examination in due course. Applicant will be notified as to the results of the examination. Any correspondence concerning the application must include the following identification information: the U.S. APPLICATION NUMBER, FILING DATE, NAME OF APPLICANT, and TITLE OF INVENTION. Fees transmitted by check or draft are subject to collection. Please verify the accuracy of the data presented on this receipt. **If an error is noted on this Filing Receipt, please submit a written request for a Filing Receipt Correction. Please provide a copy of this Filing Receipt with the changes noted thereon. If you received a "Notice to File Missing Parts" for this application, please submit any corrections to this Filing Receipt with your reply to the Notice. When the USPTO processes the reply to the Notice, the USPTO will generate another Filing Receipt incorporating the requested corrections**

Applicant(s)

Bastian Noller, Lorsch, GERMANY;
Reinhold Schwalm, Wachenheim, GERMANY;
Christine Rösch, Oppenheim, GERMANY;
Thomas Breiner, Laudenbach, GERMANY;

Assignment For Published Patent Application

BASF SE, Ludwigshafen, GERMANY

Power of Attorney: The patent practitioners associated with Customer Number 022850

Domestic Priority data as claimed by applicant

This appln claims benefit of 61/304,816 02/16/2010

Foreign Applications (You may be eligible to benefit from the **Patent Prosecution Highway** program at the USPTO. Please see http://www.uspto.gov for more information.)

If Required, Foreign Filing License Granted: 03/07/2011

The country code and number of your priority application, to be used for filing abroad under the Paris Convention, is **US 13/027,696**

Projected Publication Date: Not Applicable

Non-Publication Request: No

Early Publication Request: No

Title

SILYLATED AMINO RESINS

Preliminary Class

525

PROTECTING YOUR INVENTION OUTSIDE THE UNITED STATES

Since the rights granted by a U.S. patent extend only throughout the territory of the United States and have no effect in a foreign country, an inventor who wishes patent protection in another country must apply for a patent in a specific country or in regional patent offices. Applicants may wish to consider the filing of an international application under the Patent Cooperation Treaty (PCT). An international (PCT) application generally has the same effect as a regular national patent application in each PCT-member country. The PCT process **simplifies** the filing of patent applications on the same invention in member countries, but **does not result** in a grant of "an international patent" and does not eliminate the need of applicants to file additional documents and fees in countries where patent protection is desired.

Almost every country has its own patent law, and a person desiring a patent in a particular country must make an application for patent in that country in accordance with its particular laws. Since the laws of many countries differ in various respects from the patent law of the United States, applicants are advised to seek guidance from specific foreign countries to ensure that patent rights are not lost prematurely.

Applicants also are advised that in the case of inventions made in the United States, the Director of the USPTO must issue a license before applicants can apply for a patent in a foreign country. The filing of a U.S. patent application serves as a request for a foreign filing license. The application's filing receipt contains further information and guidance as to the status of applicant's license for foreign filing.

Applicants may wish to consult the USPTO booklet, "General Information Concerning Patents" (specifically, the section entitled "Treaties and Foreign Patents") for more information on timeframes and deadlines for filing foreign patent applications. The guide is available either by contacting the USPTO Contact Center at 800-786-9199, or it can be viewed on the USPTO website at http://www.uspto.gov/web/offices/pac/doc/general/index.html.

For information on preventing theft of your intellectual property (patents, trademarks and copyrights), you may wish to consult the U.S. Government website, http://www.stopfakes.gov. Part of a Department of Commerce initiative, this website includes self-help "toolkits" giving innovators guidance on how to protect intellectual property in specific countries such as China, Korea and Mexico. For questions regarding patent enforcement issues, applicants may call the U.S. Government hotline at 1-866-999-HALT (1-866-999-4158).

LICENSE FOR FOREIGN FILING UNDER

Title 35, United States Code, Section 184

Title 37, Code of Federal Regulations, 5.11 & 5.15

GRANTED

The applicant has been granted a license under 35 U.S.C. 184, if the phrase "IF REQUIRED, FOREIGN FILING LICENSE GRANTED" followed by a date appears on this form. Such licenses are issued in all applications where the conditions for issuance of a license have been met, regardless of whether or not a license may be required as

set forth in 37 CFR 5.15. The scope and limitations of this license are set forth in 37 CFR 5.15(a) unless an earlier license has been issued under 37 CFR 5.15(b). The license is subject to revocation upon written notification. The date indicated is the effective date of the license, unless an earlier license of similar scope has been granted under 37 CFR 5.13 or 5.14.

This license is to be retained by the licensee and may be used at any time on or after the effective date thereof unless it is revoked. This license is automatically transferred to any related applications(s) filed under 37 CFR 1.53(d). This license is not retroactive.

The grant of a license does not in any way lessen the responsibility of a licensee for the security of the subject matter as imposed by any Government contract or the provisions of existing laws relating to espionage and the national security or the export of technical data. Licensees should apprise themselves of current regulations especially with respect to certain countries, of other agencies, particularly the Office of Defense Trade Controls, Department of State (with respect to Arms, Munitions and Implements of War (22 CFR 121-128)); the Bureau of Industry and Security, Department of Commerce (15 CFR parts 730-774); the Office of Foreign AssetsControl, Department of Treasury (31 CFR Parts 500+) and the Department of Energy.

NOT GRANTED

No license under 35 U.S.C. 184 has been granted at this time, if the phrase "IF REQUIRED, FOREIGN FILING LICENSE GRANTED" DOES NOT appear on this form. Applicant may still petition for a license under 37 CFR 5.12, if a license is desired before the expiration of 6 months from the filing date of the application. If 6 months has lapsed from the filing date of this application and the licensee has not received any indication of a secrecy order under 35 U.S.C. 181, the licensee may foreign file the application pursuant to 37 CFR 5.15(b).

UNITED STATES PATENT AND TRADEMARK OFFICE

Commissioner for Patents
United States Patent and Trademark Office
P.O. Box 1450
Alexandria, VA 22313-1450
www.uspto.gov

MAILED

APR 20 2011

PCT LEGAL ADMINISTRATION

Loctite Corporation
One Henkel Way
Rocky Hill CT 06067

In re Application of: BAI, et al.	:	
U.S. Application No.: 13/027,747	:	DECISION ON PETITION TO
Filing Date: February 15, 2011	:	REVIVE ABANDONED
Attorney's Docket No.: LDET-120/PCT/US	:	APPLICATION UNDER 37
For: LOW TEMPERATURE CURING	:	CFR 1.137(b)
COMPOSITIONS	:	

The petition to revive under 37 CFR 1.137(b) filed February 15, 2011in the above-captioned application is hereby **GRANTED** as follows:

Applicant's statement that "the entire delay in filing the required reply from the due date for the required reply until the filing of a grantable petition under 37 C.F.R. § 1.137(b) was unintentional" and the prompt filing of the petition satisfies the requirement of 37 CFR 1.137(b)(3).

International application PCT/US2009/004568 became abandoned as to the United States of America at midnight on February 08, 2011 for failure to timely pay the basic national fee. The filing of the present continuing application under 35 U.S.C. 111(a) is accepted as the appropriate response under 37 CFR 1.137(b). See MPEP § 711.03(c).

International application PCT/US2009/004568 is being revived for purposes of continuity only and since continuity has been established by this decision reviving the international application, the international application is again abandoned in favor of the present continuing application number 13/027,747.

This application is being referred to the Office of Initial Patent Examination for further processing.

Derek A. Putonen
Attorney Advisor
Office of PCT Legal Administration
Telephone: (571) 272-3294

UNITED STATES PATENT AND TRADEMARK OFFICE

Commissioner for Patents
United States Patent and Trademark Office
P.O. Box 1450
Alexandria, VA 22313-1450
www.uspto.gov

RATNERPRESTIA
P.O. BOX 980
VALLEY FORGE, PA 19482

MAILED

FEB 08 2012

OFFICE OF PETITIONS

In re Application of	:	
Gunter Heinrich, et. al.	:	
Application No. 13/027,779	:	DECISION ON PETITION
Filed: February 15, 2011	:	TO WITHDRAW FROM
Attorney Docket No. GLT-109US2	:	RECORD

This is a decision on the Request to Withdraw as attorney or agent of record under 37 CFR §§ 1.36(b) or 37 CFR 10.40, filed January 6, 2012.

The request is **APPROVED**.

The request was signed by Jennifer A. Harchick on behalf of herself. Therefore, Jennifer A. Harchick has been withdrawn as attorney/agent of record; all other attorneys/agents remain of record.

The correspondence address of record remains unchanged.

There is an outstanding Office action mailed on January 13, 2012, that requires a reply.

Telephone inquiries concerning this decision should be directed to the undersigned at (571) 272-3226.

/Andrea Smith/
Andrea Smith
Petitions Examiner
Office of Petitions

Doc Code: PET.GREEN
Document Description: Petition for Green Tech Pilot

PTO/SB/420 (03-11)

PETITION TO MAKE SPECIAL UNDER THE GREEN TECHNOLOGY PILOT PROGRAM

Attorney Docket Number: 20062.0010USC2	Application Number (if known): 13/027831	Filing date: February 15, 2011

First Named Inventor: Attlesey

Title: A CASE AND RACK SYSTEM FOR LIQUID SUBMERSION COOLING OF ELECTRONIC DEVICES CONNECTED IN AN ARRAY

APPLICANT HEREBY REQUESTS TO PARTICIPATE IN THE GREEN TECHNOLOGY PILOT PROGRAM FOR THE ABOVE-IDENTIFIED APPLICATION. See Instruction Sheet on page 2.

This petition must be timely filed electronically using the USPTO electronic filing system, EFS-Web.

1. By filing this petition:

   Applicant is requesting early publication: Applicant hereby requests early publication under 37 CFR 1.219 and the publication fee set forth in 37 CFR 1.18(d) accompanies this request.

2. By filing this petition: applicant is agreeing to make an election without traverse in a telephonic interview and elect an invention that meets the eligibility requirements for the Green Technology Pilot Program, if the Office determines that the claims are not obviously directed to a single invention. See Instruction Sheet.

3. This request is accompanied by statements of special status for the eligibility requirement.

4. The application contains no more than three (3) independent claims and twenty (20) total claims.

5. The application does not contain any multiple dependent claims.

6. Other attachments: "Rittal White Paper 507: Understanding Data Center Cooling Energy Usage & Reduction Methods"

Signature /James A. Larson/	Date June 22, 2011
Name (Print/Typed) James A. Larson	Registration Number 40,443

Note: *Signatures of all the inventors or assignees of record of the entire interest or their representative(s) are required in accordance with 37 CFR 1.33 and 11.18. Please see 37 CFR 1.4(d) for the form of the signature. If necessary, submit multiple forms for more than one signature, see below*.*

☒ *Total of 1 forms are submitted.

If you need assistance in completing the form, call 1-800-PTO-9199 and select option 2.

UNITED STATES PATENT AND TRADEMARK OFFICE

UNITED STATES DEPARTMENT OF COMMERCE
United States Patent and Trademark Office
Address: COMMISSIONER FOR PATENTS
P.O. Box 1450
Alexandria, Virginia 22313-1450
www.uspto.gov

APPLICATION NO.	FILING DATE	FIRST NAMED INVENTOR	ATTORNEY DOCKET NO.	CONFIRMATION NO.
13/027,831	02/15/2011	Chad Daniel Attlesey	20062.0010USC2	7572

52835 7590 06/29/2011
HAMRE, SCHUMANN, MUELLER & LARSON, P.C.
P.O. BOX 2902
MINNEAPOLIS, MN 55402-0902

EXAMINER
THOMPSON, TIMOTHY J

ART UNIT	PAPER NUMBER
2835	

MAIL DATE	DELIVERY MODE
06/29/2011	PAPER

Please find below and/or attached an Office communication concerning this application or proceeding.

The time period for reply, if any, is set in the attached communication.

UNITED STATES PATENT AND TRADEMARK OFFICE

Commissioner for Patents
United States Patent and Trademark Office
P.O. Box 1450
Alexandria, VA 22313-1450
www.uspto.gov

HAMRE, SCHUMANN, MUELLER & LARSON, P.C.
P.O. BOX 2902
MINNEAPOLIS MN 55402-0902

In re Application of	:	
Chad ATTLESEY	:	DECISION ON PETITION
Application No. 13/027,831	:	TO MAKE SPECIAL UNDER
Filed: February 15, 2011	:	THE GREEN TECHNOLOGY
Attorney Docket No. 20062.0010USC2	:	PILOT PROGRAM

This is a decision on the petition under 37 CFR 1.102, filed on June 22, 2011, to make the above-identified application special under the pilot program for applications pertaining to Green Technologies as set forth 74 Federal Register Notice 64666 (December 8, 2009) and amended by 75 Federal Register Notice 28554 (May 21, 2010) and 75 Federal Register Notice 69049 (November 10, 2010).

The petition is **GRANTED**.

A grantable petition to make an application special under 37 CFR 1.102 and the pilot program as set forth in 74 FR 64666 must be directed to a nonprovisional application filed under 35 USC 111(a) or be a national stage entry under 35 USC 371, exclusive of any reissue applications.

In order to qualify for special status, the following requirements must be met. 1) The application must have no more than 3 independent claims and no more than 20 total claims. 2) The application must not contain any multiple dependent claims. 3) The petition must state the basis for seeking special status, i.e., the claimed invention either: A) materially enhances the quality of the environment or B) materially contributes to: i) the discovery or development of renewable energy resources, ii) the more efficient utilization and conservation of energy resources, or iii) greenhouse gas emission reduction. 4) If the disclosure is not clear on its face that the claimed invention materially contributes under category (A) or (B), the petition must be accompanied by a statement by the applicant, assignee, or an attorney/agent registered to practice before the Office explaining how the materiality standard is met. 5) A statement that applicant will agree to make an election without traverse in a telephonic interview if a restriction requirement is made by the examiner. 6) The petition to make special must be filed electronically. 7) The petition must be filed at least one day prior to the date that a first Office Action appears in the Patent Application Information Retrieval (PAIR) system. 8) The petition must be accompanied by a request for early publication in compliance with 37 CFR 1.219 and include the publication fee as set forth in 37 CFR 1.18(d).

The requirement for a fee for consideration of the petition to make special for applications pertaining to Green Technologies has been waived.

The instant petition complies with items 1 – 8 above. Accordingly, the above-identified application has been accorded "special" status.

Telephone inquires concerning this decision should be directed to Lee W. Young at 571-272-4549.

The application is being forwarded to the Technology Center Art Unit 2835 for action on the merits commensurate with this decision.

Lee W. Young
Quality Assurance Specialist
Technology Center 2800

UNITED STATES PATENT AND TRADEMARK OFFICE

Commissioner for Patents
United States Patent and Trademark Office
P.O. Box 1450
Alexandria, VA 22313-1450
www.uspto.gov

In re Application of
Elizabeth A. Emond

Application No. 13027835

Filed: February 15,2011

Attorney Docket No. EMOND-001-US

:DECISION ON PETITION TO MAKE SPECIAL
:UNDER 37 CFR 1.102(c)(1)

This is a decision on the electronic petition under 37 CFR 1.102 (c)(1), filed 02-SEP-2011 to make the above-identified application special based on applicant's age as set forth in MPEP § 708.02, Section IV.

The petition is **GRANTED**.

A grantable petition to make an application special under 37 CFR 1.102(c)(1), MPEP § 708.02, Section IV: Applicant's Age must include a statement by applicant or a registered practitioner having evidence that applicant is at least 65 years of age. No fee is required.

Accordingly, the above-identified application has been accorded "special" status and will be taken up for action by the examiner upon the completion of all pre-examination processing.

Telephone inquiries concerning this electronic decision should be directed to the Electronic Business Center at 866-217-9197.

All other inquiries concerning either the examination or status of the application should be directed to the Technology Center.

Doc code : PET.OP.AGE
Description : Petition to make special based on Age/Health

PTO/SB/130 (07-09)
Approved for use through 07/31/2012. OMB 0651- 0031
U.S. Patent and Trademark Office; U.S. DEPARTMENT OF COMMERCE
Under the Paperwork Reduction Act of 1995, no persons are required to respond to a collection of information unless it contains a valid OMB control number

PETITION TO MAKE SPECIAL BASED ON AGE FOR ADVANCEMENT OF EXAMINATION UNDER 37 CFR 1.102(c)(1)

Application Information

Application Number	13/027,835	Confirmation Number	7583	Filing Date	2011-02-15
Attorney Docket Number (optional)	EMOND-001-US	Art Unit	3616	Examiner	
First Named Inventor	EMOND, Elizabeth A.				
Title of Invention	Restraint Adjustment Apparatus, Method and System				

Attention: Office of Petitions
An application may be made special for advancement of examination upon filing of a petition showing that the applicant is 65 years of age, or more. No fee is required with such a petition. See 37 CFR 1.102(c)(1) and MPEP 708.02 (IV).

APPLICANT HEREBY PETITIONS TO MAKE SPECIAL FOR ADVANCEMENT OF EXAMINATION IN THIS APPLICATION UNDER 37 CFR 1.102(c)(1) and MPEP 708.02 (IV) ON THE BASIS OF THE APPLICANT'S AGE.

A grantable petition requires one of the following items:
(1) Statement by one named inventor in the application that he/she is 65 years of age, or more; or
(2) Certification by a registered attorney/agent having evidence such as a birth certificate, passport, driver's license, etc. showing one named inventor in the application is 65 years of age, or more.

Name of Inventor who is 65 years of age, or older

Given Name	Middle Name	Family Name	Suffix
Elizabeth	A.	Emond	

A signature of the applicant or representative is required in accordance with 37 CFR 1.33 and 10.18.
Please see 37 CFR 1.4(d) for the format of the signature.

Select (1) or (2) :

○ (1) I am an inventor in this application and I am 65 years of age, or more.

● (2) I am an attorney or agent registered to practice before the Patent and Trademark Office, and I certify that I am in possession of evidence, and will retain such in the application file record, showing that the inventor listed above is 65 years of age, or more.

Signature	/Christopher J. Maier/	Date (YYYY-MM-DD)	2011-09-02
Name	Christopher J. Maier	Registration Number	53255

PTO/SB/130 (07-09)
Approved for use through 07/31/2012. OMB 0651- 0031
U.S. Patent and Trademark Office; U.S. DEPARTMENT OF COMMERCE
Under the Paperwork Reduction Act of 1995, no persons are required to respond to a collection of information unless it contains a valid OMB control number

Privacy Act Statement

The Privacy Act of 1974 (P.L. 93-579) requires that you be given certain information in connection with your submission of the attached form related to a patent application or patent. Accordingly, pursuant to the requirements of the Act, please be advised that: (1) the general authority for the collection of this information is 35 U.S.C. 2(b)(2); (2) furnishing of the information solicited is voluntary; and (3) the principal purpose for which the information is used by the U.S. Patent and Trademark Office is to process and/or examine your submission related to a patent application or patent. If you do not furnish the requested information, the U.S. Patent and Trademark Office may not be able to process and/or examine your submission, which may result in termination of proceedings or abandonment of the application or expiration of the patent.

The information provided by you in this form will be subject to the following routine uses:

1. The information on this form will be treated confidentially to the extent allowed under the Freedom of Information Act (5 U.S.C. 552) and the Privacy Act (5 U.S.C. 552a). Records from this system of records may be disclosed to the Department of Justice to determine whether the Fr eedom of Information Act requires disclosure of these records.

2. A record from this system of records may be disclosed, as a routine use, in the course of presenting evidence to a court, magistrate, or administrative tribunal, including disclosures to opposing counsel in the course of settlement negotiations.

3. A record in this system of records may be disclosed, as a routine use, to a Member of Congress submitting a request involving an individual, to whom the record pertains, when the individual has requested assistance from the Member with respect to the subject matter of the record.

4. A record in this system of records may be disclosed, as a routine use, to a contractor of the Agency having need for the information in order to perform a contract. Recipients of information shall be required to comply with the requirements of the Privacy Act of 1974, as amended, pursuant to 5 U.S.C. 552a(m).

5. A record related to an International Application filed under the Patent Cooperation Treaty in this system of records may be disclosed, as a routine use, to the International Bureau of the World Intellectual Property Organization, pursuant to the Patent Cooperation Treaty.

6. A record in this system of records may be disclosed, as a routine use, to another federal agency for purposes of National Security review (35 U.S.C. 181) and for review pursuant to the Atomic Energy Act (42 U.S.C. 218(c)).

7. A record from this system of records may be disclosed, as a routine use, to the Administrator, General Services, or his/her designee, during an inspection of records conducted by GSA as part of that agency's responsibility to recommend improvements in records management practices and programs, under authority of 44 U.S.C. 2904 and 2906. Such disclosure shall be made in accordance with the GSA regulations governing inspection of records for this purpose, and any other relevant (i.e., GSA or Commerce) directive. Such disclosure shall not be used to make determinations about indivi duals.

8. A record from this system of records may be disclosed, as a routine use, to the public after either publication of the application pursuant to 35 U.S.C. 122(b) or issuance of a patent pursuant to 35 U.S.C. 151. Further, a record may be disclosed, subject to the limitations of 37 CFR 1.14, as a routine use, to the public if the record was filed in an application which became abandoned or in which the proceedings were terminated and which application is referenced by either a published application, an application open to public inspections or an issued patent.

9. A record from this system of records may be disclosed, as a routine use, to a Federal, State, or local law enforcement agency, if the USPTO becomes aware of a violation or potential violation of law or regulation.

UNITED STATES PATENT AND TRADEMARK OFFICE

Commissioner for Patents
United States Patent and Trademark Office
P.O. Box 1450
Alexandria, VA 22313-1450
www.uspto.gov

MAILED

MAR 30 2011

OFFICE OF PETITIONS

CHERNOFF VILHAUER MCCLUNG & STENZEL LLP
601 SW SECOND AVENUE
SUITE 1600
PORTLAND OR 97204-3157

In re Application
Andrew J. Vilcauskas
Application No. 13/028,010
Filed: February 15, 2011
Attorney Docket No. 8096.0032

DECISION

This is a decision on the fee deficiency submission under 37 CFR 1.28(c), filed February 25, 2011.

The fee deficiency submission under 37 CFR 1.28 of $628, representing the filing fee, search fee, and examination fee, is hereby accepted.

The change of status to large entity has been entered.

The application is being forwarded to Group Art Unit 3622 for prosecution.

Telephone inquiries concerning this matter may be directed to the undersigned at (571) 272-3207.

Cliff Congo
Petitions Attorney
Office of Petitions

UNITED STATES PATENT AND TRADEMARK OFFICE

Commissioner for Patents
United States Patent and Trademark Office
P.O. Box 1450
Alexandria, VA 22313-1450
www.uspto.gov

CONNOLLY BOVE LODGE & HUTZ LLP
P.O. BOX 2207
WILMINGTON DE 19899

MAILED
APR 25 2011
OFFICE OF PETITIONS

In re Application of	:	
Alexey Kashik et al.	:	
Application No. 13/028,037	:	DECISION ON PETITION
Filed: February 15, 2011	:	TO MAKE SPECIAL UNDER
Attorney Docket No. 70493-00003	:	37 CFR 1.102(c)(1)
	:	

This is a decision on the petition under 37 CFR 1.102(c)(1), filed February 15, 2011, to make the above-identified application special based on applicant's age as set forth in M.P.E.P. § 708.02, Section IV.

The petition is **GRANTED.**

A grantable petition to make an application special under 37 CFR 1.102(c)(1) and MPEP § 708.02, Section IV: Applicant's Age must be accompanied by evidence showing that at least one of the applicants is 65 years of age, or more, such as a birth certificate or a statement by applicant. No fee is required

The instant petition includes declarations of inventors Alexey Kashik and Georgy Gogonenkov, attesting to his/her age. The above-identified application has been accorded "special" status.

Telephone inquiries concerning this decision should be directed to Kimberly Inabinet at 571-272-4618.

All other inquiries concerning either the examination or status of the application should be directed to the Technology Center.

The application is being forwarded to the Technology Center Art Unit 2172 for action on the merits commensurate with this decision.

/Kimberly Inabinet/

Kimberly Inabinet
Petitions Examiner
Office of Petitions

UNITED STATES PATENT AND TRADEMARK OFFICE

UNITED STATES DEPARTMENT OF COMMERCE
United States Patent and Trademark Office
Address: COMMISSIONER FOR PATENTS
P.O. Box 1450
Alexandria, Virginia 22313-1450
www.uspto.gov

APPLICATION NO.	FILING DATE	FIRST NAMED INVENTOR	ATTORNEY DOCKET NO.	CONFIRMATION NO.
13/028,105	02/15/2011	Hiroyuki OKA	NGTOSH.163AUS	8089

7590 02/09/2012
KNOBBE MARTENS OLSON & BEAR LLP
2040 MAIN STREET
FOURTEENTH FLOOR
IRVINE, CA 92614

EXAMINER
KOENIG, ANDREW Y

ART UNIT	PAPER NUMBER
2423	

NOTIFICATION DATE	DELIVERY MODE
02/09/2012	ELECTRONIC

DECISION GRANTING PETITION UNDER 37 CFR 1.138(d)

The declaration of express abandonment is recognized

This is in response to the petition under 37 CFR 1.138(d), requesting for a refund of any previously paid search fee and excess claims fee in the above-identified application.

The petition is granted.

The express abandonment is recognized. Any previously paid search fee and excess claims fee are hereby refunded.

Telephone inquiries should be directed to the Office of Data Management at (571) 272-4200.

Mimi Harris

Patent Publication Branch
Office of Data Management

FORM PET651G (Rev. 08/07)

UNITED STATES PATENT AND TRADEMARK OFFICE

Commissioner for Patents
United States Patent and Trademark Office
P.O. Box 1450
Alexandria, VA 22313-1450
www.uspto.gov

In re Application of
Armen P. Sarvazyan

Application No. 13028301

Filed:

Attorney Docket No. AL-43

:DECISION ON PETITION TO MAKE SPECIAL
:UNDER 37 CFR 1.102(c)(1)

This is a decision on the electronic petition under 37 CFR 1.102 (c)(1), filed 16-FEB-2011 to make the above-identified application special based on applicant's age as set forth in MPEP § 708.02, Section IV.

The petition is **GRANTED**.

A grantable petition to make an application special under 37 CFR 1.102(c)(1), MPEP § 708.02, Section IV: Applicant's Age must include a statement by applicant or a registered practitioner having evidence that applicant is at least 65 years of age. No fee is required.

Accordingly, the above-identified application has been accorded "special" status and will be taken up for action by the examiner upon the completion of all pre-examination processing.

Telephone inquiries concerning this electronic decision should be directed to the Electronic Business Center at 866-217-9197.

All other inquiries concerning either the examination or status of the application should be directed to the Technology Center.

UNITED STATES PATENT AND TRADEMARK OFFICE

Commissioner for Patents
United States Patent and Trademark Office
P.O. Box 1450
Alexandria, VA 22313-1450
www.uspto.gov

MAILED
DEC 06 2011
OFFICE OF PETITIONS

Dynamics Inc.
Suite 203
9576 Perry Highway
Pittsburgh, PA 15237

In re Application of	:	
Cloutier et al.	:	
Application No. 13/028,423	:	Decision Refusing to Accord
Filed: February 16, 2011	:	Status Under 37 CFR 1.47(a)
Attorney Docket No. D/032	:	
For: Systems and Methods for Drive	:	
Circuits for Dynamic Magnetic	:	
Stripe Communications Devices	:	

This is a decision on the petition under 37 CFR 1.47(a) filed September 30, 2011.

The petition is **DISMISSED**.

Any request for reconsideration of this decision must be submitted within TWO (2) MONTHS from the mail date of this decision. Extensions of time under 37 CFR 1.136(a) are permitted. No further petition fee is required for the request. Any response should be entitled "Request for Reconsideration of Petition Under 37 CFR 1.47(a)" and may include an oath or declaration executed by the current non-signing inventor(s). **Failure to respond will result in abandonment of the application.**

A grantable petition under 37 CFR 1.47(a) requires

(1) Proof that the non-signing inventor cannot be found or reached after diligent effort or that the inventor refused to sign the declaration after having been presented with the application papers (specification, claims, and drawings),
(2) A proper oath or declaration executed by the available joint inventor(s),
(3) The fee of $200 as specified in 37 CFR 1.17(g),
(4) The last known address of the non-signing inventor(s), and
(5) An oath or declaration signed by the signing inventors on behalf of themselves and the non-signing inventor.

The instant petition fails to satisfy requirement (5) set forth above.

The declaration includes a signature block stating, "James H. Workley for Bruce S. Cloutier," a signature block for inventor Lambeth, and a signature block for inventor Workley. Workley has signed in the first and third signature blocks. Lambeth has signed in the second signature block.

In order for a petition under 37 CFR 1.47(a) to be granted, all signing inventors must sign the oath or declaration on behalf of the non-signing inventor. The declaration expressly indicates Workley is signing on behalf of Cloutier, without including such express language for Lambeth. As a result, the language in the declaration implies Lambeth is not signing the declaration on behalf of himself and Cloutier. Therefore, the petition cannot be granted.

A request for reconsideration and a new declaration should be filed. The declaration should be expressly signed by both signing inventors on behalf of Cloutier or should include signature blocks for all three inventors without any signature in Cloutier's signature block.[1]

A request to change the address of record to the address set forth in the petition was filed November 16, 2011. The request is signed by Michael T. Wallace. The record fails to indicate Michael Wallace has been given a power of attorney or agent in this case. Therefore, the address of record will not be changed. A courtesy copy of this decision is being mailed to the address given on the petition; however, the Office will mail all future correspondence solely to the address of record.

Further correspondence with respect to this matter may be submitted as follows:

By Internet: A request for reconsideration may be filed electronically using EFS Web.[2] Document Code "PET.OP" should be used if the request is filed electronically.

By mail:
Mail Stop Petition
Commissioner for Patents
P.O. Box 1450
Alexandria, VA 22313-1450

By facsimile: (571) 273-8300
Attn: Office of Petitions

By hand:
U.S. Patent and Trademark Office
Customer Service Window
Randolph Building
401 Dulany Street
Alexandria, VA 22314

[1] An oath or declaration signed by all the available joint inventors with the signature block of the nonsigning inventor(s) left blank will normally be treated as having been signed by all the available joint inventors on behalf of the nonsigning inventor(s), unless otherwise indicated. *See* MPEP 409.03(a).

[2] General Information concerning EFS Web can be found at http://www.uspto.gov/patents/process/file/efs/index.jsp.

Telephone inquiries regarding this communication should be directed to Petitions Attorney Steven Brantley at (571) 272-3203.

Charles Steven Brantley
Senior Petitions Attorney
Office of Petitions

cc: Michael T. Wallace
Dynamics Inc.
493 Nixon Road
Cheswick, PA 15024

PTO/SB/20PCT-EP (05-10)
Approved for use through 01/31/2015. OMB 0651-0058
U.S. Patent and Trademark Office; U.S DEPARTMENT OF COMMERCE

Under the Paperwork Reduction Act of 1995, no persons are required to respond to a collection of information unless it displays a valid OMB control number.

REQUEST FOR PARTICIPATION IN THE PATENT COOPERATION TREATY – PATENT PROSECUTION HIGHWAY (PCT-PPH) PILOT PROGRAM BETWEEN THE EUROPEAN PATENT OFFICE (EPO) AND THE USPTO

Application No.:	13/028,431	First Named Inventor:	Kevin L. Moss
Filing Date:	February 16, 2011	Attorney Docket No.:	P-099
Title of the Invention:	Dual Bracketed Energy Delivery Probe and Method of Use		

THIS REQUEST FOR PARTICIPATION IN THE PCT-PPH PILOT PROGRAM ALONG WITH THE REQUIRED DOCUMENTS MUST BE SUBMITTED VIA EFS-WEB. INFORMATION REGARDING EFS-WEB IS AVAILABLE AT HTTP://WWW.USPTO.GOV/EBC/EFS_HELP.HTML.

APPLICANT HEREBY REQUESTS PARTICIPATION IN THE PCT-PPH PILOT PROGRAM AND PETITIONS TO MAKE THE ABOVE-IDENTIFIED APPLICATION SPECIAL UNDER THE PCT-PPH PILOT PROGRAM.

The above-identified application is (1) a national stage entry of the corresponding PCT application, or (2) a national stage entry of another PCT application which claims priority to the corresponding PCT application, or (3) a national application that claims domestic/ foreign priority to the corresponding PCT application, or (4) a national application which forms the basis for the priority claim in the corresponding PCT application, or (5) a continuing application of a U.S. application that satisfies one of (1) to (4) above, or (6) a U.S. application that claims domestic benefit to a U.S. provisional application which forms the basis for the priority claim in the corresponding PCT application.

The corresponding PCT application number(s) is/are: PCT/US2011/025003

The international filing date of the corresponding PCT application(s) is/are: February 16, 2011

I. List of Required Documents:

a. **A copy of the latest international work product (WO/ISA, WO/IPEA, or IPER) in the above-identified corresponding PCT application(s)**

☐ is attached.

☑ is not attached because the document is already in the U.S. application.

b. **A copy of all claims which were indicated as having novelty, inventive step and industrial applicability in the above-identified corresponding PCT application(s)**

☐ is attached.

☑ is not attached because the document is already in the U.S. application.

c. **English translations of the documents in a. and b. above are attached (if the documents are not in the English language). A statement that the English translation is accurate is attached for the document in b. above.**

d. **(1) An information disclosure statement listing the documents cited in the international work products (ISR, WO/ISA, WO/IPEA, IPER) of the corresponding PCT application.**

☐ is attached.

☑ has already been filed in the above-identified U.S. application on November 9, 2011

(2) Copies of all documents (except for U.S. patents or U.S. patent application publications)

☐ are attached.

☑ have already been filed in the above-identified U.S. application on November 9, 2011

This collection of information is required by 35 U.S.C. 119, 37 CFR 1.55, and 37 CFR 1.102(d). The information is required to obtain or retain a benefit by the public, which is to file (and by the USPTO to process) an application. Confidentiality is governed by 35 U.S.C. 122 and 37 CFR 1.11 and 1.14. This collection is estimated to take 2 hours to complete, including gathering, preparing, and submitting the completed application form to the USPTO. Time will vary depending upon the individual case. Any comments on the amount of time you require to complete this form and/or suggestions for reducing this burden should be sent to the Chief Information Officer, U.S. Patent and Trademark Office, U.S. Department of Commerce, P.O. Box 1450, Alexandria, VA 22313-1450. DO NOT SEND FEES OR COMPLETED FORMS TO THIS ADDRESS.

Under the Paperwork Reduction Act of 1995, no persons are required to respond to a collection of information unless it displays a valid OMB control number.

REQUEST FOR PARTICIPATION IN THE PCT-PPH PILOT PROGRAM BETWEEN THE EPO AND THE USPTO

(continued)

Application No.:	PCT/US2011/025003	First Named Inventor:	Kevin L. Moss

II. Claims Correspondence Table:

Claims in US Application	Patentable Claims in the corresponding PCT application	Explanation regarding the correspondence
1-31	1-31	Claims 1-31 are identical in each application

III. All the claims in the US application sufficiently correspond to the patentable claims in the corresponding PCT application.

Signature /Tara L. Custer/	Date April 4, 2012
Name (Print/Typed) Tara L. Custer	Registration Number 51,019

Privacy Act Statement

The **Privacy Act of 1974 (P.L. 93-579)** requires that you be given certain information in connection with your submission of the attached form related to a patent application or patent. Accordingly, pursuant to the requirements of the Act, please be advised that: (1) the general authority for the collection of this information is 35 U.S.C. 2(b)(2); (2) furnishing of the information solicited is voluntary; and (3) the principal purpose for which the information is used by the U.S. Patent and Trademark Office is to process and/or examine your submission related to a patent application or patent. If you do not furnish the requested information, the U.S. Patent and Trademark Office may not be able to process and/or examine your submission, which may result in termination of proceedings or abandonment of the application or expiration of the patent.

The information provided by you in this form will be subject to the following routine uses:

1. The information on this form will be treated confidentially to the extent allowed under the Freedom of Information Act (5 U.S.C. 552) and the Privacy Act (5 U.S.C 552a). Records from this system of records may be disclosed to the Department of Justice to determine whether disclosure of these records is required by the Freedom of Information Act.
2. A record from this system of records may be disclosed, as a routine use, in the course of presenting evidence to a court, magistrate, or administrative tribunal, including disclosures to opposing counsel in the course of settlement negotiations.
3. A record in this system of records may be disclosed, as a routine use, to a Member of Congress submitting a request involving an individual, to whom the record pertains, when the individual has requested assistance from the Member with respect to the subject matter of the record.
4. A record in this system of records may be disclosed, as a routine use, to a contractor of the Agency having need for the information in order to perform a contract. Recipients of information shall be required to comply with the requirements of the Privacy Act of 1974, as amended, pursuant to 5 U.S.C. 552a(m).
5. A record related to an International Application filed under the Patent Cooperation Treaty in this system of records may be disclosed, as a routine use, to the International Bureau of the World Intellectual Property Organization, pursuant to the Patent Cooperation Treaty.
6. A record in this system of records may be disclosed, as a routine use, to another federal agency for purposes of National Security review (35 U.S.C. 181) and for review pursuant to the Atomic Energy Act (42 U.S.C. 218(c)).
7. A record from this system of records may be disclosed, as a routine use, to the Administrator, General Services, or his/her designee, during an inspection of records conducted by GSA as part of that agency's responsibility to recommend improvements in records management practices and programs, under authority of 44 U.S.C. 2904 and 2906. Such disclosure shall be made in accordance with the GSA regulations governing inspection of records for this purpose, and any other relevant (*i.e.*, GSA or Commerce) directive. Such disclosure shall not be used to make determinations about individuals.
8. A record from this system of records may be disclosed, as a routine use, to the public after either publication of the application pursuant to 35 U.S.C. 122(b) or issuance of a patent pursuant to 35 U.S.C. 151. Further, a record may be disclosed, subject to the limitations of 37 CFR 1.14, as a routine use, to the public if the record was filed in an application which became abandoned or in which the proceedings were terminated and which application is referenced by either a published application, an application open to public inspection or an issued patent.
9. A record from this system of records may be disclosed, as a routine use, to a Federal, State, or local law enforcement agency, if the USPTO becomes aware of a violation or potential violation of law or regulation.

UNITED STATES PATENT AND TRADEMARK OFFICE

UNITED STATES DEPARTMENT OF COMMERCE
United States Patent and Trademark Office
Address: COMMISSIONER FOR PATENTS
P.O. Box 1450
Alexandria, Virginia 22313-1450
www.uspto.gov

APPLICATION NO.	FILING DATE	FIRST NAMED INVENTOR	ATTORNEY DOCKET NO.	CONFIRMATION NO.
13/028,449	02/16/2011	Hyo Kun SON	HI-0632	8766

34610 7590 04/12/2011
KED & ASSOCIATES, LLP
P.O. Box 8638
Reston, VA 20195

EXAMINER

ART UNIT	PAPER NUMBER
2811	

MAIL DATE	DELIVERY MODE
04/12/2011	PAPER

Please find below and/or attached an Office communication concerning this application or proceeding.

The time period for reply, if any, is set in the attached communication.

UNITED STATES PATENT AND TRADEMARK OFFICE

Commissioner for Patents
United States Patent and Trademark Office
P.O. Box 1450
Alexandria, VA 22313-1450
www.uspto.gov

KED & ASSOCIATES, LLP
P.O. Box 8638
Reston VA 20195

In re Application of	**: DECISION ON REQUEST TO**
Hyo Kun SON	**: PARTICIPATE IN THE PATENT**
Application No.: 13/028,449	**: PROSECUTION HIGHWAY**
Filed: 16 February 2011	**: PROGRAM AND PETITION**
Attorney Docket No.: HI-0632	**: TO MAKE SPECIAL UNDER**
For: LIGHT EMITTING DEVICE AND LIGHT EMITTING DEVICE PACKAGE	**: 37 CFR 1.102(a)**

This is a decision on the request to participate in the Patent Prosecution Highway (PPH) program and the petition under 37 CFR 1.102(a), filed 22 February 2011, to make the above-identified application special.

The request and petition are **DISMISSED**.

Discussion

The allowed claims being relied upon for the basis of this petition are in KIPO application 10-2010-0009210 but applicant used the form for the PCT–PPH agreement with KIPO. The petition has been treated under the PPH agreement with KIPO.

A grantable request to participate in the PPH program and petition to make special require:

1. The U.S. application is

    a. a Paris Convention application which either
        i. validly claims priority under 35 U.S.C. 119(a) and 37 CFR 1.55 to one or more applications filed in the KIPO, or
        ii. validly claims priority under 35 U.S.C. 119(a)/365(a) to a PCT application that contains no priority claims,

    or

    b. a national stage application under the PCT (an application which entered the national stage in the U.S. from a PCT international application after compliance with 35 U.S.C. 371), which PCT application
        i. validly claims priority under 35 U.S.C. 365(b) to an application filed in the KIPO, or

ii. validly claims priority under 35 U.S.C. 365(b) to a PCT application that contains no priority claims, or
iii. contains no priority claim,

or

c. a so-called bypass application filed under 35 U.S.C. 111(a) which validly claims benefit under 35 U.S.C. 120 to a PCT application, which PCT application
   i. validly claims priority under 35 U.S.C. 365(b) to an application filed in the KIPO, or
   ii. validly claims priority under 35 U.S.C. 365(b) to a PCT application that contains no priority claims, or
   iii. contains no priority claim;

2. Applicant must submit a copy of:
   a. The allowable/patentable claim(s) from the KR application(s);
   b. An English translation of the allowable/patentable claim(s), and
   c. A statement that the English translation is accurate (if the claims were published in a language other than English);
3. Applicant must:
   a. Ensure that all the claims in the U.S. application must sufficiently correspond or be amended to sufficiently correspond to the allowable/patentable claim(s) in the KR application(s), and
   b. Submit a claims correspondence table in English;
4. Examination of the U.S. application has not begun;
5. Applicant must submit:
   a. A copy of all the office actions (which are relevant to patentability), excluding "Decision to Grant a Patent" from each of the KR application(s) containing the allowable/patentable claim(s);
   b. An English language translation of the KIPO office action; and
   c. A statement that the English translation is accurate (if the office actions are not in the English language);
6. Applicant must submit:
   a. An IDS listing the documents cited by the KIPO examiner in the KIPO office action (unless already filed in this application); and
   b. Copies of all the documents cited in the KIPO office action, except U.S. patents or U.S. patent application publications (unless already filed in this application);

This request to participate in the PPH program and petition is assessed as follows:

Requirements 1, 2, 4, and 6 above are considered to have been met.
However the request to participate in the PPH program fails to meet requirements 3 and 5.

Regarding requirement 3, applicant has failed to ensure that all the claims in the U.S. application sufficiently correspond to the allowable/patentable claims in the KR application. For example only, US claim 4 recites "($0<x\leq0.03$, $0<y<1$, $0<x+y<1$)" while translated claim 4 recites "($0\leq x\leq1$, $0\leq y\leq1$, $0\leq x+y\leq1$)." It appears that the translated may not be correct.

Regarding requirement 5, applicant has failed to a statement that the English translation of the office action is accurate.

Applicant is given **ONE** opportunity within a time period of **ONE MONTH or THIRTY DAYS**, whichever is longer, from the mailing date of this decision to correct the deficiencies. **NO EXTENSION OF TIME UNDER 37 CFR 1.136 IS PERMITTED.** If the deficiencies are not corrected with the time period given, the application will await action in its regular turn.

Response must be filed via the Electronic Filing System (EFS) using the document description: Petition to make special under Patent Pros Hwy. Any preliminary amendments and IDS submitted with the PPH documents must be separately indexed as a preliminary amendment and IDS, respectively.

Telephone inquiries concerning this decision should be directed to Lee W. Young at (571) 272-4549.

All other inquiries concerning the examination or status of the application is accessible in the PAIR system at http://www.uspto.gov/ebc.index.html.

Lee W. Young
TQAS
Technology Center 2800 – Semiconductors
Electrical & Optical Systems & Components

UNITED STATES PATENT AND TRADEMARK OFFICE

UNITED STATES DEPARTMENT OF COMMERCE
United States Patent and Trademark Office
Address: COMMISSIONER FOR PATENTS
P.O. Box 1450
Alexandria, Virginia 22313-1450
www.uspto.gov

APPLICATION NO.	FILING DATE	FIRST NAMED INVENTOR	ATTORNEY DOCKET NO.	CONFIRMATION NO.
13/028,449	02/16/2011	Hyo Kun SON	HI-0632	8766

34610 7590 05/17/2011
KED & ASSOCIATES, LLP
P.O. Box 8638
Reston, VA 20195

EXAMINER

ART UNIT	PAPER NUMBER
2811	

MAIL DATE	DELIVERY MODE
05/17/2011	PAPER

Please find below and/or attached an Office communication concerning this application or proceeding.

The time period for reply, if any, is set in the attached communication.

UNITED STATES PATENT AND TRADEMARK OFFICE

Commissioner for Patents
United States Patent and Trademark Office
P.O. Box 1450
Alexandria, VA 22313-1450
www.uspto.gov

KED & ASSOCIATES, LLP
P.O. Box 8638
Reston VA 20195

In re Application of	**: DECISION ON REQUEST TO**
Hyo Kun SON	**: PARTICIPATE IN THE PATENT**
Application No.: 13/028,449	**: PROSECUTION HIGHWAY**
Filed: 16 February 2011	**: PROGRAM AND PETITION**
Attorney Docket No.: HI-0632	**: TO MAKE SPECIAL UNDER**
For: LIGHT EMITTING DEVICE AND LIGHT EMITTING DEVICE PACKAGE	**: 37 CFR 1.102(a)**

This is a decision on the request to participate in the Patent Prosecution Highway (PPH) program and the petition under 37 CFR 1.102(a), filed 22 February 2011 and renewed on 11 May 2011, to make the above-identified application special.

The request and petition are **GRANTED**.

Discussion

A grantable request to participate in the PPH program and petition to make special require:

1. The U.S. application is

    a. a Paris Convention application which either
        i. validly claims priority under 35 U.S.C. 119(a) and 37 CFR 1.55 to one or more applications filed in the KIPO, or
        ii. validly claims priority under 35 U.S.C. 119(a)/365(a) to a PCT application that contains no priority claims,

    or

    b. a national stage application under the PCT (an application which entered the national stage in the U.S. from a PCT international application after compliance with 35 U.S.C. 371), which PCT application
        i. validly claims priority under 35 U.S.C. 365(b) to an application filed in the KIPO, or
        ii. validly claims priority under 35 U.S.C. 365(b) to a PCT application that contains no priority claims, or
        iii. contains no priority claim,

    or

    c. a so-called bypass application filed under 35 U.S.C. 111(a) which validly claims benefit under 35 U.S.C. 120 to a PCT application, which PCT application

i. validly claims priority under 35 U.S.C. 365(b) to an application filed in the KIPO, or
ii. validly claims priority under 35 U.S.C. 365(b) to a PCT application that contains no priority claims, or
iii. contains no priority claim;

2. Applicant must submit a copy of:
   a. The allowable/patentable claim(s) from the KR application(s);
   b. An English translation of the allowable/patentable claim(s), and
   c. A statement that the English translation is accurate (if the claims were published in a language other than English);
3. Applicant must:
   a. Ensure that all the claims in the U.S. application must sufficiently correspond or be amended to sufficiently correspond to the allowable/patentable claim(s) in the KR application(s), and
   b. Submit a claims correspondence table in English;
4. Examination of the U.S. application has not begun;
5. Applicant must submit:
   a. A copy of all the office actions (which are relevant to patentability), excluding "Decision to Grant a Patent" from each of the KR application(s) containing the allowable/patentable claim(s);
   b. An English language translation of the KIPO office action; and
   c. A statement that the English translation is accurate (if the office actions are not in the English language);
6. Applicant must submit:
   a. An IDS listing the documents cited by the KIPO examiner in the KIPO office action (unless already filed in this application); and
   b. Copies of all the documents cited in the KIPO office action, except U.S. patents or U.S. patent application publications (unless already filed in this application);

The request to participate in the PPH program and petition comply with the above requirements. Accordingly, the above-identified application has been accorded "special" status.

Telephone inquiries concerning this decision should be directed to Lee W. Young at 571-272-4549.

All other inquiries concerning the examination or status of the application is accessible in the PAIR system at http://uspto.gov/ebc/index.html.

Lee W. Young
TQAS
Technology Center 2800 – Semiconductors
Electrical & Optical Systems & Components

UNITED STATES PATENT AND TRADEMARK OFFICE

UNITED STATES DEPARTMENT OF COMMERCE
United States Patent and Trademark Office
Address: COMMISSIONER FOR PATENTS
P.O. Box 1450
Alexandria, Virginia 22313-1450
www.uspto.gov

APPLICATION NO.	FILING DATE	FIRST NAMED INVENTOR	ATTORNEY DOCKET NO.	CONFIRMATION NO.
13/028,495	02/16/2011	Julian Gordon	GOR10717P00011US	8882

32116 7590 02/22/2011
WOOD, PHILLIPS, KATZ, CLARK & MORTIMER
500 W. MADISON STREET
SUITE 3800
CHICAGO, IL 60661

EXAMINER

ART UNIT	PAPER NUMBER
1641	

MAIL DATE	DELIVERY MODE
02/22/2011	PAPER

Please find below and/or attached an Office communication concerning this application or proceeding.

The time period for reply, if any, is set in the attached communication.

UNITED STATES PATENT AND TRADEMARK OFFICE

Commissioner for Patents
United States Patent and Trademark Office
P.O. Box 1450
Alexandria, VA 22313-1450
www.uspto.gov

FEB 2 2 2011

WOOD, PHILLIPS, KATZ, CLARK & MORTIMER
500 W. MADISON STREET
SUITE 3800
CHICAGO IL 60661

In re Application of:
Gordon et al.

Serial No.: 13/028,495

Filed: February 16, 2011

Docket No.: **GOR10717P00011US**

Title: **ELECTROKINETIC DEVICE FOR CAPTURING ASSAYABLE AGENTS IN A DIELECTRIC FLUID**

DECISION ON REQUEST FOR CONSIDERATION TO MAKE SPECIAL FOR NEW APPLICATION UNDER 37 C.F.R. § 1.102 & M.P.E.P. § 708.02

This is a decision on the petition filed on February 16, 2011 to make the above-identified application special for accelerated examination procedure under 37 C.F.R. § 1.102(d).

The petition to make the application special is GRANTED.

The application is eligible for accelerated examination and the petition complies with the conditions for granting the application special status pursuant to the "Change to Practice for Petitions in Patent Applications to Make Special and for Accelerated Examination" published June 26, 2006, in the Federal Register. (71 Fed. Reg. 36323).

The prosecution of the instant application will be conducted expeditiously according to the following guidelines.

1. The application will be docketed to an examiner and taken up for action within two weeks of the date of this decision.

2. Restriction Practice:
   If the examiner determines that the claims are not directed to a single invention, a telephone request to elect one single invention will be made pursuant to MPEP 812.01. As a prerequisite to the grant of this petition, the applicant has agreed to make an oral election, by telephone, without traverse. If the applicant refuses to make an election without traverse, or the examiner cannot reach the applicant after a reasonable effort, the

examiner will treat the first claimed invention (invention defined by claim 1) as having being constructively elected without traverse for examination.

3. Office action:
   If it is determined that, after appropriate consultation, there is a potential rejection or any other issue to be addressed, the examiner will telephone the applicant and arrange an interview to discuss and resolve the issue. An Office action, other than a Notice of Allowance and Fee(s) Due (Notice of Allowance), will not be issued unless either: 1) an interview was conducted but did not result in agreed to action that places the application in condition for allowance, or, 2) a determination is made that an interview would be unlikely to result in the application being placed in condition for allowance, and 3) an internal conference has been held to review any rejection of any claim.

4. Time for Reply:
   An Office action other than a Notice of Allowance or a final Office action will set a shortened statutory period of one month or thirty days, whichever is longer, for reply with no extension of time available under 37 CFR 1.136(a). Failure to timely file a reply within this non-extendible period for reply will result in the abandonment of the application.

5. Reply by Applicant:
   A timely reply to an Office action other than the Notice of Allowance must be submitted electronically via EFS or EFS-web and limited to addressing the rejections, objections and requirement made. Any amendment that attempts to: 1) add claims which would result in more than three pending independent claims or more than twenty pending total claims; 2) present claims not encompassed by the pre-examination search or an updated accelerated examination support document; or 3) present claims that are directed a non-elected invention or an invention other than that previously claimed and examined in the application, will be treated as not fully responsive and will not be entered.

   For any amendment to the claims (including any new claim) that is not encompassed by the accelerated examination support document, applicant must provide an updated accelerated examination support document that encompasses the amended or new claims at the time of filing of the amendment.

   To proceed expeditiously with the examination, it is recommended that a reply with amendments made to any claim or with any new claim being added be accompanied by an updated accelerated examination support document or a statement explaining how the amended or new claim is supported by the original accelerated examination support document.

6. Information Disclosure Statement (IDS):
7. Any IDS filed during prosecution must be submitted electronically via EFS or EFS-web, accompanied by an updated accelerated examination support document, and be in compliance with 37 CFR 1.97 and 1.98.

8. Post-Allowance Processing:
   To expedite processing of the allowed application into a patent, the applicant must: 1) pay the required fees within one month of the date of the Notice of Allowance, and 2) not file any post allowance papers not required by the Office. In no event may the issue fee be paid and accepted later than three months from the date of the Notice of Allowance.

9. After-Final and Appeal Procedures:
   To expedite prosecution, after receiving the final Office action, applicant must: 1) promptly file a notice of appeal, an appeal brief and appeal fees; and 2) not request a pre-appeal brief conference.

   Any amendment, affidavit or other evidence filed after final Office action must comply with applicable rules and the requirements outlined in numbered paragraphs 5 and 6 above.

   On appeal, the application will proceed according to normal appeal procedures. After appeal, the application will again be treated special.

10. Proceedings Outside the Normal Examination Process:
    If the application becomes involved in a proceeding that is outside the normal examination process (e.g., a secrecy order, national security review, interference proceeding, petitions under 37 CFR 1.181, 182 or 183), the application will be treated special before and after such proceeding.

11. Final Disposition:
    The twelve month goal of this accelerated examination procedure ends with a final disposition. The mailing of a final Office action, a Notice of Allowance, the filing of a Notice of Appeal, or the filing of a Request for Continued Examination (RCE) is the final disposition.

If, during prosecution, a paper is not filed electronically using EFS-web, a reply is filed but is not fully responsive, the application is involved in an appeal, or a proceeding outside normal examination process, the application will still be examined expeditiously, however, the final disposition may occur more than twelve months from the filing of the application.

Any inquiry regarding this decision should be directed to Marianne C. Seidel, Quality Assurance Specialist, at (571) 272-0584.

/MC Seidel/
Marianne C. Seidel, Quality Assurance Specialist
Technology Center 1600

Doc Code: PET.GREEN
Document Description: Petition for Green Tech Pilot

PTO/SB/420 (03-11)

PETITION TO MAKE SPECIAL UNDER THE GREEN TECHNOLOGY PILOT PROGRAM

Attorney Docket Number: 10694.083.00	Application Number (if known): 13/028,615	Filing date: February 16, 2011

First Named Inventor: Hwan Hee Jeong

Title: Light Emitting Device

APPLICANT HEREBY REQUESTS TO PARTICIPATE IN THE GREEN TECHNOLOGY PILOT PROGRAM FOR THE ABOVE-IDENTIFIED APPLICATION. See Instruction Sheet on page 2.

This petition must be timely filed electronically using the USPTO electronic filing system, EFS-Web.

1. By filing this petition:

   Applicant is requesting early publication: Applicant hereby requests early publication under 37 CFR 1.219 and the publication fee set forth in 37 CFR 1.18(d) accompanies this request.

2. By filing this petition: applicant is agreeing to make an election without traverse in a telephonic interview and elect an invention that meets the eligibility requirements for the Green Technology Pilot Program, if the Office determines that the claims are not obviously directed to a single invention. See Instruction Sheet.

3. This request is accompanied by statements of special status for the eligibility requirement.

4. The application contains no more than three (3) independent claims and twenty (20) total claims.

5. The application does not contain any multiple dependent claims.

6. Other attachments: _____

Signature /Randall C. Pyles/	Date May 2, 2011
Name (Print/Typed) Randall C. Pyles	Registration Number 66,523

Note: *Signatures of all the inventors or assignees of record of the entire interest or their representative(s) are required in accordance with 37 CFR 1.33 and 11.18. Please see 37 CFR 1.4(d) for the form of the signature. If necessary, submit multiple forms for more than one signature, see below*.*

☒ *Total of 1 forms are submitted.

If you need assistance in completing the form, call 1-800-PTO-9199 and select option 2.

Instruction Sheet for
Petition to Make Special Under the Green Technology Pilot Program

(Not to be Submitted to the USPTO)

The following is a summary of the requirements (for more information see the notices (i) "Pilot Program for Green Technologies Including Greenhouse Gas Reduction," (ii) "Elimination of Classification Requirement in the Green Technology Pilot Program," and (iii) "Expansion and Extension of the Green Technology Pilot Program," available on the USPTO web site at http://www.uspto.gov/patents/init_events/green_tech.jsp):

(1) The application must be a non-reissue, non-provisional utility application filed under 35 U.S.C. 111(a), or an international application that has entered the national stage in compliance with 35 U.S.C. 371, irrespective of the filing date of the application. Reexamination proceedings are excluded from this pilot program.

(2) The application must contain three or fewer independent claims and twenty or fewer total claims. The application must not contain any multiple dependent claims. For an application that contains more than three independent claims or twenty total claims, or multiple dependent claims, applicant must file a preliminary amendment in compliance with 37 CFR 1.121 to cancel the excess claims and/or the multiple dependent claims at the time the petition to make special is filed.

(3) The claims must be directed to a single invention that materially enhances the quality of the environment, or that materially contributes to: (1) the discovery or development of renewable energy resources; (2) the more efficient utilization and conservation of energy resources; or (3) green house gas emission reduction (see the eligibility requirements of sections II and III of the notice (i) cited above). The petition must include a statement that, if the USPTO determines that the claims are directed to multiple inventions (e.g., in a restriction requirement), applicant will agree to make an election without traverse in a telephonic interview, and elect an invention that meets the eligibility requirements in section II or III of the notice (i) cited above.

(4) The petition to make special must be timely filed electronically using the USPTO electronic filing system, EFS-Web, and selecting the document description of "Petition for Green Tech Pilot" on the EFS-Web screen. Applicant should use form PTO/SB/420, which is available as a Portable Document Format (PDF) fillable form in EFS-Web and on the USPTO Web site.

(5) The petition to make special must be filed at least one day prior to the date that a first Office action (which may be an Office action containing only a restriction requirement) appears in the Patent Application Information Retrieval (PAIR) system. Applicant may check the status of the application using PAIR.

(6) The petition to make special must be accompanied by a request for early publication in compliance with 37 CFR 1.219 and the publication fee set forth in 37 CFR 1.18(d).

Privacy Act Statement

The **Privacy Act of 1974 (P.L. 93-579)** requires that you be given certain information in connection with your submission of the attached form related to a patent application or patent. Accordingly, pursuant to the requirements of the Act, please be advised that: (1) the general authority for the collection of this information is 35 U.S.C. 2(b)(2); (2) furnishing of the information solicited is voluntary; and (3) the principal purpose for which the information is used by the U.S. Patent and Trademark Office is to process and/or examine your submission related to a patent application or patent. If you do not furnish the requested information, the U.S. Patent and Trademark Office may not be able to process and/or examine your submission, which may result in termination of proceedings or abandonment of the application or expiration of the patent.

The information provided by you in this form will be subject to the following routine uses:

1. The information on this form will be treated confidentially to the extent allowed under the Freedom of Information Act (5 U.S.C. 552) and the Privacy Act (5 U.S.C 552a). Records from this system of records may be disclosed to the Department of Justice to determine whether disclosure of these records is required by the Freedom of Information Act.
2. A record from this system of records may be disclosed, as a routine use, in the course of presenting evidence to a court, magistrate, or administrative tribunal, including disclosures to opposing counsel in the course of settlement negotiations.
3. A record in this system of records may be disclosed, as a routine use, to a Member of Congress submitting a request involving an individual, to whom the record pertains, when the individual has requested assistance from the Member with respect to the subject matter of the record.
4. A record in this system of records may be disclosed, as a routine use, to a contractor of the Agency having need for the information in order to perform a contract. Recipients of information shall be required to comply with the requirements of the Privacy Act of 1974, as amended, pursuant to 5 U.S.C. 552a(m).
5. A record related to an International Application filed under the Patent Cooperation Treaty in this system of records may be disclosed, as a routine use, to the International Bureau of the World Intellectual Property Organization, pursuant to the Patent Cooperation Treaty.
6. A record in this system of records may be disclosed, as a routine use, to another federal agency for purposes of National Security review (35 U.S.C. 181) and for review pursuant to the Atomic Energy Act (42 U.S.C. 218(c)).
7. A record from this system of records may be disclosed, as a routine use, to the Administrator, General Services, or his/her designee, during an inspection of records conducted by GSA as part of that agency's responsibility to recommend improvements in records management practices and programs, under authority of 44 U.S.C. 2904 and 2906. Such disclosure shall be made in accordance with the GSA regulations governing inspection of records for this purpose, and any other relevant (*i.e.*, GSA or Commerce) directive. Such disclosure shall not be used to make determinations about individuals.
8. A record from this system of records may be disclosed, as a routine use, to the public after either publication of the application pursuant to 35 U.S.C. 122(b) or issuance of a patent pursuant to 35 U.S.C. 151. Further, a record may be disclosed, subject to the limitations of 37 CFR 1.14, as a routine use, to the public if the record was filed in an application which became abandoned or in which the proceedings were terminated and which application is referenced by either a published application, an application open to public inspection or an issued patent.
9. A record from this system of records may be disclosed, as a routine use, to a Federal, State, or local law enforcement agency, if the USPTO becomes aware of a violation or potential violation of law or regulation.

Docket No.: 10694.083.00
(PATENT)

IN THE UNITED STATES PATENT AND TRADEMARK OFFICE

In re Patent Application of:
JEONG, Hwan Hee

Customer No.: 30827

Application No.: 13/028,615

Confirmation No.: 9126

Filed: February 16, 2011

Art Unit: TBA

For: LIGHT EMITTING DEVICE

Examiner: TBA

MS Petitions
Commissioner for Patents
P.O. Box 1450
Alexandria, VA 22313-1450

STATEMENT IN SUPPORT OF PETITION TO MAKE SPECIAL UNDER THE GREEN TECHNOLOGY PILOT PROGRAM

Dear Sir:

In support of the Petition to Make Special Under the Green Technology Pilot Program, filed concurrently herewith, the Applicant requests the above referenced application be afforded special status.

The Applicant submits the basis for special status eligibility under the Green Technology Pilot Program is that the application materially contributes to energy conservation. The application relates to a Light Emitting Device, namely a light emitting diode (LED). LEDs are advantageous as compared with conventional light sources, such as a tungsten-filament incandescent lamp, in terms of power consumption, life span, safety and environmental friendliness.

Dated: May 2, 2011

Respectfully submitted,

By /Randall C. Pyles/
Randall C. Pyles
Registration No.: 66,523
McKenna Long & Aldridge LLP
1900 K Street N.W.
Washington, D.C. 20006
Voice: 202-496-7500
Fax: 202-496-7756

UNITED STATES PATENT AND TRADEMARK OFFICE

UNITED STATES DEPARTMENT OF COMMERCE
United States Patent and Trademark Office
Address: COMMISSIONER FOR PATENTS
P.O. Box 1450
Alexandria, Virginia 22313-1450
www.uspto.gov

APPLICATION NO.	FILING DATE	FIRST NAMED INVENTOR	ATTORNEY DOCKET NO.	CONFIRMATION NO.
13/028,615	02/16/2011	Hwan Hee Jeong	10694.083.00	9126

30827 7590 05/25/2011
MCKENNA LONG & ALDRIDGE LLP
1900 K STREET, NW
WASHINGTON, DC 20006

EXAMINER

ART UNIT	PAPER NUMBER
2811	

MAIL DATE	DELIVERY MODE
05/25/2011	PAPER

Please find below and/or attached an Office communication concerning this application or proceeding.

The time period for reply, if any, is set in the attached communication.

UNITED STATES PATENT AND TRADEMARK OFFICE

Commissioner for Patents
United States Patent and Trademark Office
P.O. Box 1450
Alexandria, VA 22313-1450
www.uspto.gov

MCKENNA LONG & ALDRIDGE LLP
1900 K STREET, NW
WASHINGTON DC 20006

In re Application of	:	
JEONG et al.	:	DECISION ON PETITION
Application No. 13/028,615	:	TO MAKE SPECIAL UNDER
Filed: February 16, 2011	:	THE GREEN TECHNOLOGY
Attorney Docket No. 10694.083.00	:	PILOT PROGRAM

This is a decision on the petition under 37 CFR 1.102, filed on May 02, 2011, to make the above-identified application special under the pilot program for applications pertaining to Green Technologies as set forth 74 Federal Register Notice 64666 (December 8, 2009) and amended by 75 Federal Register Notice 28554 (May 21, 2010) and 75 Federal Register Notice 69049 (November 10, 2010).

The petition is **DISMISSED**.

If reconsideration of this decision is desired, a petition for reconsideration must be filed within ONE (1) MONTH OR THIRTY (30) DAYS from the mail date of this decision, whichever is longer. No extension of this time limit can be granted under 37 CFR 1.136(a) or (b). The petition for reconsideration should include an exhaustive attempt to provide the lacking item(s) noted below, since, after a decision on the petition for reconsideration, no further reconsideration or review of the matter will be undertaken by the Director.

A grantable petition to make an application special under 37 CFR 1.102 and the pilot program as set forth in 74 FR 64666 must be directed to a nonprovisional application filed under 35 USC 111(a) or be a national stage entry under 35 USC 371, exclusive of any reissue applications and be filed prior to the date of the notice, December 8, 2009.

In order to qualify for special status, the following requirements must be met. 1) The application must have no more than 3 independent claims and no more than 20 total claims. 2) The application must not contain any multiple dependent claims. 3) The petition must state the basis for seeking special status, i.e., the claimed invention either: A) materially enhances the quality of the environment or B) materially contributes to: i) the discovery or development of renewable energy resources, ii) the more efficient utilization and conservation of energy resources, or iii) greenhouse gas emission reduction. 4) If the disclosure is not clear on its face that the claimed invention materially contributes under category (A) or (B), the petition must be accompanied by a statement by the applicant, assignee, or an attorney/agent registered to practice before the Office explaining how the materiality standard is met. 5) A statement that applicant will agree to

make an election without traverse in a telephonic interview if a restriction requirement is made by the examiner. 6) The petition to make special must be filed electronically. 7) The petition must be filed at least one day prior to the date that a first Office Action appears in the Patent Application Information Retrieval (PAIR) system. 8) The petition must be accompanied by a request for early publication in compliance with 37 CFR 1.219 and include the publication fee as set forth in 37 CFR 1.18(d).

The requirement for a fee for consideration of the petition to make special for applications pertaining to Green Technologies has been waived.

The petition lacks item 8.

In regard to item 8, applicant's has failed to include the publication fee as set forth in 37 CFR 1.18(d).

Any reconsideration of this decision should be submitted through the USPTO electronic filing system, EFS-Web, and selecting the document description of "Petition for Green Tech Pilot" on the EFS-Web screen.

Telephone inquiries concerning this decision should be directed to Lee W. Young at 571-272-4549.

The application is being forwarded to the Technology Center Art Unit 2889 for action in its regular turn.

Lee W. Young
Quality Assurance Specialist
Technology Center 2800

Doc Code: PET.GREEN
Document Description: Petition for Green Tech Pilot

PTO/SB/420 (03-11)

PETITION TO MAKE SPECIAL UNDER THE GREEN TECHNOLOGY PILOT PROGRAM

Attorney Docket Number: 10694.083.00	Application Number (if known): 13/028,615	Filing date: February 16, 2011

First Named Inventor: Hwan Hee Jeong

Title: Light Emitting Device

APPLICANT HEREBY REQUESTS TO PARTICIPATE IN THE GREEN TECHNOLOGY PILOT PROGRAM FOR THE ABOVE-IDENTIFIED APPLICATION. See Instruction Sheet on page 2.

This petition must be timely filed electronically using the USPTO electronic filing system, EFS-Web.

1. By filing this petition:

   Applicant is requesting early publication: Applicant hereby requests early publication under 37 CFR 1.219 and the publication fee set forth in 37 CFR 1.18(d) accompanies this request.

2. By filing this petition: applicant is agreeing to make an election without traverse in a telephonic interview and elect an invention that meets the eligibility requirements for the Green Technology Pilot Program, if the Office determines that the claims are not obviously directed to a single invention. See Instruction Sheet.

3. This request is accompanied by statements of special status for the eligibility requirement.

4. The application contains no more than three (3) independent claims and twenty (20) total claims.

5. The application does not contain any multiple dependent claims.

6. Other attachments: _____

Signature /Randall C. Pyles/	Date June 1, 2011
Name (Print/Typed) Randall C. Pyles	Registration Number 66,523

***Note**: Signatures of all the inventors or assignees of record of the entire interest or their representative(s) are required in accordance with 37 CFR 1.33 and 11.18. Please see 37 CFR 1.4(d) for the form of the signature. If necessary, submit multiple forms for more than one signature, see below*.*

☒ *Total of 1 forms are submitted.

If you need assistance in completing the form, call 1-800-PTO-9199 and select option 2.

UNITED STATES PATENT AND TRADEMARK OFFICE

UNITED STATES DEPARTMENT OF COMMERCE
United States Patent and Trademark Office
Address: COMMISSIONER FOR PATENTS
P.O. Box 1450
Alexandria, Virginia 22313-1450
www.uspto.gov

APPLICATION NO.	FILING DATE	FIRST NAMED INVENTOR	ATTORNEY DOCKET NO.	CONFIRMATION NO.
13/028,615	02/16/2011	Hwan Hee Jeong	10694.083.00	9126

30827 7590 06/13/2011
MCKENNA LONG & ALDRIDGE LLP
1900 K STREET, NW
WASHINGTON, DC 20006

EXAMINER

ART UNIT	PAPER NUMBER
2811	

MAIL DATE	DELIVERY MODE
06/13/2011	PAPER

Please find below and/or attached an Office communication concerning this application or proceeding.

The time period for reply, if any, is set in the attached communication.

UNITED STATES PATENT AND TRADEMARK OFFICE

Commissioner for Patents
United States Patent and Trademark Office
P.O. Box 1450
Alexandria, VA 22313-1450
www.uspto.gov

MCKENNA LONG & ALDRIDGE LLP
1900 K STREET, NW
WASHINGTON DC 20006

In re Application of	:	
Hwan Hee JEONG	:	DECISION ON PETITION
Application No. 13/028,615	:	TO MAKE SPECIAL UNDER
Filed: February 16, 2011	:	THE GREEN TECHNOLOGY
Attorney Docket No. 10694.083.00	:	PILOT PROGRAM

This is a decision on the petition under 37 CFR 1.102, filed on May 02, 2011 and renewed on June 01, 2011, to make the above-identified application special under the pilot program for applications pertaining to Green Technologies as set forth 74 Federal Register Notice 64666 (December 8, 2009) and amended by 75 Federal Register Notice 28554 (May 21, 2010) and 75 Federal Register Notice 69049 (November 10, 2010).

The petition is **GRANTED**.

A grantable petition to make an application special under 37 CFR 1.102 and the pilot program as set forth in 74 FR 64666 must be directed to a nonprovisional application filed under 35 USC 111(a) or be a national stage entry under 35 USC 371, exclusive of any reissue applications.

In order to qualify for special status, the following requirements must be met. 1) The application must have no more than 3 independent claims and no more than 20 total claims. 2) The application must not contain any multiple dependent claims. 3) The petition must state the basis for seeking special status, i.e., the claimed invention either: A) materially enhances the quality of the environment or B) materially contributes to: i) the discovery or development of renewable energy resources, ii) the more efficient utilization and conservation of energy resources, or iii) greenhouse gas emission reduction. 4) If the disclosure is not clear on its face that the claimed invention materially contributes under category (A) or (B), the petition must be accompanied by a statement by the applicant, assignee, or an attorney/agent registered to practice before the Office explaining how the materiality standard is met. 5) A statement that applicant will agree to make an election without traverse in a telephonic interview if a restriction requirement is made by the examiner. 6) The petition to make special must be filed electronically. 7) The petition must be filed at least one day prior to the date that a first Office Action appears in the Patent Application Information Retrieval (PAIR) system. 8) The petition must be accompanied by a request for early publication in compliance with 37 CFR 1.219 and include the publication fee as set forth in 37 CFR 1.18(d).

The requirement for a fee for consideration of the petition to make special for applications pertaining to Green Technologies has been waived.

The instant petition complies with items 1 – 8 above. Accordingly, the above-identified application has been accorded "special" status.

Telephone inquires concerning this decision should be directed to Lee W. Young at 571-272-4549.

The application is being forwarded to the Technology Center Art Unit 2811 for action on the merits commensurate with this decision.

Lee W. Young
Quality Assurance Specialist
Technology Center 2800

Doc Code: PET.GREEN
Document Description: Petition for Green Tech Pilot

PTO/SB/420 (05-10)
Approved for use through 01/31/2011. OMB 0651-0062
U.S. Patent and Trademark Office; U. S. DEPARTMENT OF COMMERCE
Under the Paperwork Reduction Act of 1995, no persons are required to respond to a collection of information unless it displays a valid OMB control number.

PETITION TO MAKE SPECIAL UNDER THE GREEN TECHNOLOGY PILOT PROGRAM

Attorney Docket Number: O2-0781	Application Number (if known):	Filing date:

First Named Inventor: Ching-Chuan KUO

Title: CIRCUITS AND METHODS FOR DRIVING LIGHT SOURCES

APPLICANT HEREBY REQUESTS TO PARTICIPATE IN THE GREEN TECHNOLOGY PILOT PROGRAM FOR THE ABOVE-IDENTIFIED APPLICATION. See Instruction Sheet on page 2.

This petition must be timely filed electronically using the USPTO electronic filing system, EFS-Web.

1. By filing this petition:

   Applicant is requesting early publication: Applicant hereby requests early publication under 37 CFR 1.219 and the publication fee set forth in 37 CFR 1.18(d) accompanies this request.

2. By filing this petition: applicant is agreeing to make an election without traverse in a telephonic interview and elect an invention that meets the eligibility requirements set forth in the notice titled "Pilot Program for Green Technologies Including Greenhouse Gas Reduction," as modified by the notice titled "Elimination of Classification Requirement in the Green Technology Pilot Program," each of which was published in the Federal Register, if the Office determines that the claims are not obviously directed to a single invention.

3. This request is accompanied by statements of special status for the eligibility requirement.

4. The application contains no more than three (3) independent claims and twenty (20) total claims.

5. The application does not contain any multiple dependent claims.

6. Other attachments: _____

Signature /Yue Li/	Date 2011-02-16
Name (Print/Typed) Yue Li	Registration Number L0346

***Note**: Signatures of all the inventors or assignees of record of the entire interest or their representative(s) are required in accordance with 37 CFR 1.33 and 11.18. Please see 37 CFR 1.4(d) for the form of the signature. If necessary, submit multiple forms for more than one signature, see below*.*

☐ *Total of _____ forms are submitted.

The information is required to obtain or retain a benefit by the public which is to file (and by the USPTO to process) an application. Confidentiality is governed by 35 U.S.C. 122 and 37 CFR 1.11 and 1.14. This collection is estimated to take 1 hour to complete, including gathering, preparing, and submitting the completed application form to the USPTO. Time will vary depending upon the individual case. Any comments on the amount of time you require to complete this form and/or suggestions for reducing this burden, should be sent to the Chief Information Officer, U.S. Patent and Trademark Office, U.S. Department of Commerce, P.O. Box 1450, Alexandria, VA 22313-1450. DO NOT SEND FEES OR COMPLETED FORMS TO THIS ADDRESS. **SEND TO: Commissioner for Patents, P.O. Box 1450, Alexandria, VA 22313-1450.**

If you need assistance in completing the form, call 1-800-PTO-9199 and select option 2.

Under the Paperwork Reduction Act of 1995, no persons are required to respond to a collection of information unless it displays a valid OMB control number.

Instruction Sheet for Petition to Make Special Under the Green Technology Pilot Program

(Not to be Submitted to the USPTO)

The following is a summary of the requirements (for more information see the notices (i) "Pilot Program for Green Technologies Including Greenhouse Gas Reduction" and (ii) "Elimination of Classification Requirement in the Green Technology Pilot Program," available on the USPTO web site at http://www.uspto.gov/patents/init_events/green_tech.jsp):

(1) The application must be a non-reissue, non-provisional utility application filed under 35 U.S.C. 111(a), or an international application that has entered the national stage in compliance with 35 U.S.C. 371. The application must be previously filed before the publication date of the notice cited above. Reexamination proceedings are excluded from this pilot program.

(2) The application must contain three or fewer independent claims and twenty or fewer total claims. The application must not contain any multiple dependent claims. For an application that contains more than three independent claims or twenty total claims, or multiple dependent claims, applicant must file a preliminary amendment in compliance with 37 CFR 1.121 to cancel the excess claims and/or the multiple dependent claims at the time the petition to make special is filed.

(3) The claims must be directed to a single invention that materially enhances the quality of the environment, or that materially contributes to: (1) the discovery or development of renewable energy resources; (2) the more efficient utilization and conservation of energy resources; or (3) green house gas emission reduction (see the eligibility requirements of sections II and III of the notice (i) cited above). The petition must include a statement that, if the USPTO determines that the claims are directed to multiple inventions (e.g., in a restriction requirement), applicant will agree to make an election without traverse in a telephonic interview, and elect an invention that meets the eligibility requirements in section II or III of the notice (i) cited above.

(4) The petition to make special must be timely filed electronically using the USPTO electronic filing system, EFS-Web, and selecting the document description of "Petition for Green Tech Pilot" on the EFS-Web screen. Applicant should use form PTO/SB/420, which is available as a Portable Document Format (PDF) fillable form in EFS-Web and on the USPTO Web site.

(5) The petition to make special must be filed at least one day prior to the date that a first Office action (which may be an Office action containing only a restriction requirement) appears in the Patent Application Information Retrieval (PAIR) system. Applicant may check the status of the application using PAIR.

(6) The petition to make special must be accompanied by a request for early publication in compliance with 37 CFR 1.219 and the publication fee set forth in 37 CFR 1.18(d).

Privacy Act Statement

The **Privacy Act of 1974 (P.L. 93-579)** requires that you be given certain information in connection with your submission of the attached form related to a patent application or patent. Accordingly, pursuant to the requirements of the Act, please be advised that: (1) the general authority for the collection of this information is 35 U.S.C. 2(b)(2); (2) furnishing of the information solicited is voluntary; and (3) the principal purpose for which the information is used by the U.S. Patent and Trademark Office is to process and/or examine your submission related to a patent application or patent. If you do not furnish the requested information, the U.S. Patent and Trademark Office may not be able to process and/or examine your submission, which may result in termination of proceedings or abandonment of the application or expiration of the patent.

The information provided by you in this form will be subject to the following routine uses:

1. The information on this form will be treated confidentially to the extent allowed under the Freedom of Information Act (5 U.S.C. 552) and the Privacy Act (5 U.S.C 552a). Records from this system of records may be disclosed to the Department of Justice to determine whether disclosure of these records is required by the Freedom of Information Act.
2. A record from this system of records may be disclosed, as a routine use, in the course of presenting evidence to a court, magistrate, or administrative tribunal, including disclosures to opposing counsel in the course of settlement negotiations.
3. A record in this system of records may be disclosed, as a routine use, to a Member of Congress submitting a request involving an individual, to whom the record pertains, when the individual has requested assistance from the Member with respect to the subject matter of the record.
4. A record in this system of records may be disclosed, as a routine use, to a contractor of the Agency having need for the information in order to perform a contract. Recipients of information shall be required to comply with the requirements of the Privacy Act of 1974, as amended, pursuant to 5 U.S.C. 552a(m).
5. A record related to an International Application filed under the Patent Cooperation Treaty in this system of records may be disclosed, as a routine use, to the International Bureau of the World Intellectual Property Organization, pursuant to the Patent Cooperation Treaty.
6. A record in this system of records may be disclosed, as a routine use, to another federal agency for purposes of National Security review (35 U.S.C. 181) and for review pursuant to the Atomic Energy Act (42 U.S.C. 218(c)).
7. A record from this system of records may be disclosed, as a routine use, to the Administrator, General Services, or his/her designee, during an inspection of records conducted by GSA as part of that agency's responsibility to recommend improvements in records management practices and programs, under authority of 44 U.S.C. 2904 and 2906. Such disclosure shall be made in accordance with the GSA regulations governing inspection of records for this purpose, and any other relevant (*i.e.*, GSA or Commerce) directive. Such disclosure shall not be used to make determinations about individuals.
8. A record from this system of records may be disclosed, as a routine use, to the public after either publication of the application pursuant to 35 U.S.C. 122(b) or issuance of a patent pursuant to 35 U.S.C. 151. Further, a record may be disclosed, subject to the limitations of 37 CFR 1.14, as a routine use, to the public if the record was filed in an application which became abandoned or in which the proceedings were terminated and which application is referenced by either a published application, an application open to public inspection or an issued patent.
9. A record from this system of records may be disclosed, as a routine use, to a Federal, State, or local law enforcement agency, if the USPTO becomes aware of a violation or potential violation of law or regulation.

IN THE UNITED STATES PATENT AND TRADEMARK OFFICE

Applicant: KUO, Ching-Chuan et al. Examiner:
Serial No.: Group Art Unit:
Filed: Docket: O2-0781
Confirmation No.:
Title: CIRCUITS AND METHODS FOR DRIVING LIGHT SOURCES

STATEMENT OF SPECIAL STATUS FOR PETITION TO MAKE SPECIAL UNDER THE GREEN TECHNOLOGY PILOT PROGRAM

I hereby certify that this correspondence is being electronically transmitted to the USPTO via EFS on the date shown below:
February 16, 2011
/Julie Dalla/
Julie Dalla

Commissioner for Patents
P.O. Box 1450
Alexandria, VA 22313-1450

Dear Sir:

BASIS FOR SPECIAL STATUS

Special status under the Green Technology Pilot program is sought because the claimed subject matter of this Application materially contributes to the more efficient utilization and conservation of energy resources. Further, the claimed subject matter of this Application materially enhances the quality of the environment through energy conservation.

HOW THE MATERIALITY STANDARD IS MET

The claimed subject matter of this Application is directed to method, driving circuit, and dimming controller for controlling/driving a light source including light-emitting diodes (LEDs), in various applications such as color and brightness control of the light output of the light source. The method, driving circuit, and dimming controller materially reduce energy consumption by enabling the color and brightness adjustment of the light output of the LED light source. Also, extra apparatus for color selection and light dimming, such as an external remote controller or a specially designed switch with adjusting buttons, is avoided to economize on energy and materials. Additionally, the claimed subject matter may be employed in industrial equipment, commercial equipment, and household appliances to materially contribute to the more efficient utilization and conservation of energy resources.

An example of a household appliance is an LED lamp. In an LED lamp, many LEDs are driven by a driving circuit to generate light output. In order to generate different color and different levels of light output, the claimed subject matter may be employed herein.

LEDs have a multitude of environmental advantages. Unlike incandescent and fluorescent bulbs, an LED light source does not utilize a filament or any type of luminary gas. LEDs contain no harmful chemicals such as mercury which is found in fluorescent lights. LEDs are manufactured from materials that can be fully recycled. Most energy used by the LED is converted into light, not heat. Traditional lighting is

relatively inefficient due to the large amounts of heat generated in the production of light. Moreover, LEDs have a longer lifespan.

The Commissioner is hereby authorized to charge fees associated with this communication or credit any overpayment to Deposit Account No.: 50-4245.

Please direct all correspondence concerning the above-identified application to the following address:

O2MICRO, INC.
3118 Patrick Henry Dr.
Santa Clara, California 95054
(408) 987-5920
71271

Respectfully submitted,

Date: February 16, 2011

By: /Yue Li/
Yue Li
Reg. No. L0346

UNITED STATES PATENT AND TRADEMARK OFFICE

Commissioner for Patents
United States Patent and Trademark Office
P.O. Box 1450
Alexandria, VA 22313-1450
www.uspto.gov

PATENT PROSECUTION
O2MIRCO , INC.
3118 PATRICK HENRY DRIVE
SANTA CLARA CA 95054

MAILED

SEP 08 2011

OFFICE OF PETITIONS

In re Application of	:
Kuo et al.	:
Application No. 13/028,626	: DECISION ON PETITION
Filed: February 16, 2011	: UNDER 37 CFR 1.78(a)(3)
Attorney Docket No. 02-0781	:

This is a decision on the petition under 37 CFR 1.78(a)(3), filed August 30, 2011 and supplemented on September 6, 2011, to accept an unintentionally delayed claim under 35 U.S.C. § 120 for the benefit of priority to prior-filed nonprovisional Application No. 12/316,480, filed December 12, 2008, as set forth in the amendment filed concurrently with the instant petition.

The petition is **DISMISSED**.

A petition for acceptance of a claim for late priority under 37 CFR 1.78(a)(3) is only applicable to those applications filed on or after November 29, 2000. Further, the petition is appropriate only after the expiration of the period specified in 37 CFR 1.78(a)(2)(ii). In addition, the petition under 37 CFR 1.78(a)(3) must be accompanied by:

(1) the reference required by 35 U.S.C. § 120 and 37 CFR 1.78(a)(2)(i) of the prior-filed application(s), unless previously submitted;
(2) the surcharge set forth in § 1.17(t); and
(3) a statement that the entire delay between the date the claim was due under 37 CFR 1.78(a)(2)(ii) and the date the claim was filed was unintentional. The Commissioner may require additional information where there is a question whether the delay was unintentional.

The instant petition does not comply with item (1) above.

A reference to add the above-noted, prior-filed application on page one following the first sentence of the specification has been included in a concurrently filed amendment. However, the amendment is not acceptable as drafted since it improperly incorporates by reference the prior-filed application. Petitioner's attention is directed to Dart Industries v. Banner, 636 F.2d 684, 207 USPQ 273 (C.A.D.C. 1980), where the court drew a distinction between a permissible 35 U.S.C. § 120 statement and the impermissible introduction of new matter by way of incorporation by reference in a 35 U.S.C. § 120 statement. The court specifically stated:

> Section 120 merely provides a mechanism whereby an application becomes entitled to benefit of the filing date of an earlier application disclosing the same subject matter. Common subject matter must be disclosed, in both applications, either specifically or by an express incorporation-by-reference of prior disclosed subject matter. Nothing in section 120 itself operates to carry forward any disclosure from an earlier application. In re deSeversky, supra at 674, 177 USPQ at 146-147. Section 120 contains no magical disclosure-augmenting powers able to pierce new matter barriers. It cannot, therefore, "limit" the absolute and express prohibition against new matter contained in section 251.

In order for the incorporation by reference statement to be effective as a proper safeguard against the omission of a portion of a prior application, the incorporation by reference statement must be included in the specification-as-filed, or in an amendment specifically referred to in an oath or declaration executing the application. *See* In re deSeversky, *supra*. *Note also* MPEP 201.06(c).

Accordingly, before the petition under 37 CFR 1.78(a)(3) can be granted, a substitute amendment[1] deleting the incorporation by reference statement with respect to Application No. 12/316,480, along with a renewed petition under 37 CFR 1.78(a)(3), is required. No further petition fee is necessary.

Further correspondence with respect to this matter should be addressed as follows:

By mail:	Mail Stop PETITIONS Commissioner for Patents Post Office Box 1450 Alexandria, VA 22313-1450
By hand:	Customer Window located at: U.S. Patent and Trademark Office Customer Service Window Randolph Building 401 Dulany Street Alexandria, VA 22314
By fax:	(571) 273-8300 ATTN: Office of Petitions

Any questions concerning this matter may be directed to the undersigned at (571) 272-3206.

/Liana Walsh/
Liana Walsh
Petitions Examiner
Office of Petitions

---

[1] *Note* 37 CFR 1.121

UNITED STATES PATENT AND TRADEMARK OFFICE

Commissioner for Patents
United States Patent and Trademark Office
P.O. Box 1450
Alexandria, VA 22313-1450
www.uspto.gov

PATENT PROSECUTION
O2MIRCO , INC.
3118 PATRICK HENRY DRIVE
SANTA CLARA CA 95054

MAILED
OCT 18 2011
OFFICE OF PETITIONS

In re Application of	:	
Kuo et al.	:	
Application No. 13/028,626	:	DECISION GRANTING PETITION
Filed: February 16, 2011	:	UNDER 37 CFR 1.78(a)(3)
Attorney Docket No. 02-0781	:	

This is a decision on the renewed petition under 37 CFR 1.78(a)(3), filed September 26, 2011, to accept an unintentionally delayed claim under 35 U.S.C. § 120 for the benefit of priority to prior-filed nonprovisional Application No. 12/316,480, filed December 12, 2008, as set forth in the amendment filed concurrently with the instant petition.

The petition is **GRANTED**.

A petition for acceptance of a claim for late priority under 37 CFR 1.78(a)(3) is only applicable to those applications filed on or after November 29, 2000. Further, the petition is appropriate only after the expiration of the period specified in 37 CFR 1.78(a)(2)(ii). In addition, the petition under 37 CFR 1.78(a)(3) must be accompanied by:

(1) the reference required by 35 U.S.C. § 120 and 37 CFR 1.78(a)(2)(i) of the prior-filed application, unless previously submitted;
(2) the surcharge set forth in § 1.17(t); and
(3) a statement that the entire delay between the date the claim was due under 37 CFR 1.78(a)(2)(ii) and the date the claim was filed was unintentional. The Commissioner may require additional information where there is a question whether the delay was unintentional.

The instant nonprovisional application was filed after November 29, 2000, and the claim herein for the benefit of priority to the prior-filed nonprovisional application is submitted after expiration of the period specified by 37 CFR 1.78(a)(2)(ii). Therefore, this is a proper petition under 37 CFR 1.78(a)(3).

The petition complies with the requirements for a grantable petition under 37 CFR 1.78(a)(3) in that (1) a reference to the above-noted, prior-filed nonprovisional application has been included in an amendment to the first sentence of the specification following the title, as provided by 37 CFR 1.78(a)(2)(iii); (2) the surcharge fee required by 37 CFR 1.17(t) has been submitted; and (3) the petition contains a proper statement of unintentional delay. Accordingly, having found that the instant petition for acceptance of an unintentionally delayed claim for the benefit of priority under 35 U.S.C. § 120 to the above-noted, prior-filed nonprovisional application satisfies the conditions of 37 CFR 1.78(a)(3), the petition is granted.

The granting of the petition to accept the delayed benefit claim to the prior-filed application under 37 CFR 1.78(a)(3) should not be construed as meaning that the instant application is entitled to the benefit of the prior-filed application. In order for the instant application to be entitled to the benefit of the prior-filed application, all other requirements under 35 U.S.C. § 120 and 37 CFR 1.78(a)(1) and (a)(2) must be met. Similarly, the fact that the corrected Filing Receipt accompanying this decision on petition includes the prior-filed application should not be construed as meaning that applicant is entitled to the claim for benefit of priority to the prior-filed application noted thereon. Accordingly, the examiner will, in due course, consider this benefit claim and determine whether the instant application is entitled to the benefit of the earlier filing date.

A corrected Filing Receipt, which includes the priority claim to the prior-filed nonprovisional application, accompanies this decision on petition.

Any inquiries concerning this decision may be directed to the undersigned at (571) 272-3282.

This matter is being referred to Technology Center Art Unit 2821 for appropriate action on the amendment filed September 26, 2011, including consideration by the examiner of applicant's entitlement to claim benefit of priority under 35 U.S.C. § 120 to the prior-filed nonprovisional application.

/Liana Walsh/
Liana Walsh
Petitions Examiner
Office of Petitions

ATTACHMENT: Corrected Filing Receipt

UNITED STATES PATENT AND TRADEMARK OFFICE

UNITED STATES DEPARTMENT OF COMMERCE
United States Patent and Trademark Office
Address: COMMISSIONER FOR PATENTS
P.O. Box 1450
Alexandria, Virginia 22313-1450
www.uspto.gov

APPLICATION NUMBER	FILING or 371(c) DATE	GRP ART UNIT	FIL FEE REC'D	ATTY.DOCKET.NO	TOT CLAIMS	IND CLAIMS
13/028,626	02/16/2011	2821	1520	02-0781	20	3

CONFIRMATION NO. 9144

CORRECTED FILING RECEIPT

OC000000050434362

71271
PATENT PROSECUTION
O2MIRCO , INC.
3118 PATRICK HENRY DRIVE
SANTA CLARA, CA 95054

Date Mailed: 10/18/2011

Receipt is acknowledged of this non-provisional patent application. The application will be taken up for examination in due course. Applicant will be notified as to the results of the examination. Any correspondence concerning the application must include the following identification information: the U.S. APPLICATION NUMBER, FILING DATE, NAME OF APPLICANT, and TITLE OF INVENTION. Fees transmitted by check or draft are subject to collection. Please verify the accuracy of the data presented on this receipt. **If an error is noted on this Filing Receipt, please submit a written request for a Filing Receipt Correction. Please provide a copy of this Filing Receipt with the changes noted thereon. If you received a "Notice to File Missing Parts" for this application, please submit any corrections to this Filing Receipt with your reply to the Notice. When the USPTO processes the reply to the Notice, the USPTO will generate another Filing Receipt incorporating the requested corrections**

Applicant(s)

Ching-Chuan KUO, Taipei, TAIWAN;
Yung-Lin Lin, Palo Alto, CA;

Assignment For Published Patent Application

O2Micro, Inc., Santa Clara, CA

Power of Attorney: None

Domestic Priority data as claimed by applicant

This application is a CIP of 12/415,028 03/31/2009
which is a CIP of 12/316,480 12/12/2008 PAT 8,044,608

Foreign Applications (You may be eligible to benefit from the **Patent Prosecution Highway** program at the USPTO. Please see http://www.uspto.gov for more information.)

If Required, Foreign Filing License Granted: 02/25/2011

The country code and number of your priority application, to be used for filing abroad under the Paris Convention, is **US 13/028,626**

Projected Publication Date: To Be Determined - pending completion of Missing Parts

Non-Publication Request: No

Early Publication Request: Yes

Title

CIRCUITS AND METHODS FOR DRIVING LIGHT SOURCES

Preliminary Class

315

PROTECTING YOUR INVENTION OUTSIDE THE UNITED STATES

Since the rights granted by a U.S. patent extend only throughout the territory of the United States and have no effect in a foreign country, an inventor who wishes patent protection in another country must apply for a patent in a specific country or in regional patent offices. Applicants may wish to consider the filing of an international application under the Patent Cooperation Treaty (PCT). An international (PCT) application generally has the same effect as a regular national patent application in each PCT-member country. The PCT process **simplifies** the filing of patent applications on the same invention in member countries, but **does not result** in a grant of "an international patent" and does not eliminate the need of applicants to file additional documents and fees in countries where patent protection is desired.

Almost every country has its own patent law, and a person desiring a patent in a particular country must make an application for patent in that country in accordance with its particular laws. Since the laws of many countries differ in various respects from the patent law of the United States, applicants are advised to seek guidance from specific foreign countries to ensure that patent rights are not lost prematurely.

Applicants also are advised that in the case of inventions made in the United States, the Director of the USPTO must issue a license before applicants can apply for a patent in a foreign country. The filing of a U.S. patent application serves as a request for a foreign filing license. The application's filing receipt contains further information and guidance as to the status of applicant's license for foreign filing.

Applicants may wish to consult the USPTO booklet, "General Information Concerning Patents" (specifically, the section entitled "Treaties and Foreign Patents") for more information on timeframes and deadlines for filing foreign patent applications. The guide is available either by contacting the USPTO Contact Center at 800-786-9199, or it can be viewed on the USPTO website at http://www.uspto.gov/web/offices/pac/doc/general/index.html.

For information on preventing theft of your intellectual property (patents, trademarks and copyrights), you may wish to consult the U.S. Government website, http://www.stopfakes.gov. Part of a Department of Commerce initiative, this website includes self-help "toolkits" giving innovators guidance on how to protect intellectual property in specific countries such as China, Korea and Mexico. For questions regarding patent enforcement issues, applicants may call the U.S. Government hotline at 1-866-999-HALT (1-866-999-4158).

LICENSE FOR FOREIGN FILING UNDER

Title 35, United States Code, Section 184

Title 37, Code of Federal Regulations, 5.11 & 5.15

GRANTED

The applicant has been granted a license under 35 U.S.C. 184, if the phrase "IF REQUIRED, FOREIGN FILING LICENSE GRANTED" followed by a date appears on this form. Such licenses are issued in all applications where the conditions for issuance of a license have been met, regardless of whether or not a license may be required as

set forth in 37 CFR 5.15. The scope and limitations of this license are set forth in 37 CFR 5.15(a) unless an earlier license has been issued under 37 CFR 5.15(b). The license is subject to revocation upon written notification. The date indicated is the effective date of the license, unless an earlier license of similar scope has been granted under 37 CFR 5.13 or 5.14.

This license is to be retained by the licensee and may be used at any time on or after the effective date thereof unless it is revoked. This license is automatically transferred to any related applications(s) filed under 37 CFR 1.53(d). This license is not retroactive.

The grant of a license does not in any way lessen the responsibility of a licensee for the security of the subject matter as imposed by any Government contract or the provisions of existing laws relating to espionage and the national security or the export of technical data. Licensees should apprise themselves of current regulations especially with respect to certain countries, of other agencies, particularly the Office of Defense Trade Controls, Department of State (with respect to Arms, Munitions and Implements of War (22 CFR 121-128)); the Bureau of Industry and Security, Department of Commerce (15 CFR parts 730-774); the Office of Foreign AssetsControl, Department of Treasury (31 CFR Parts 500+) and the Department of Energy.

NOT GRANTED

No license under 35 U.S.C. 184 has been granted at this time, if the phrase "IF REQUIRED, FOREIGN FILING LICENSE GRANTED" DOES NOT appear on this form. Applicant may still petition for a license under 37 CFR 5.12, if a license is desired before the expiration of 6 months from the filing date of the application. If 6 months has lapsed from the filing date of this application and the licensee has not received any indication of a secrecy order under 35 U.S.C. 181, the licensee may foreign file the application pursuant to 37 CFR 5.15(b).

UNITED STATES PATENT AND TRADEMARK OFFICE

UNITED STATES DEPARTMENT OF COMMERCE
United States Patent and Trademark Office
Address: COMMISSIONER FOR PATENTS
P.O. Box 1450
Alexandria, Virginia 22313-1450
www.uspto.gov

APPLICATION NO.	FILING DATE	FIRST NAMED INVENTOR	ATTORNEY DOCKET NO.	CONFIRMATION NO.
13/028,626	02/16/2011	Ching-Chuan KUO	02-0781	9144

71271 7590 11/28/2011
PATENT PROSECUTION
O2MIRCO , INC.
3118 PATRICK HENRY DRIVE
SANTA CLARA, CA 95054

EXAMINER	
ART UNIT	PAPER NUMBER
2821	

MAIL DATE	DELIVERY MODE
11/28/2011	PAPER

Please find below and/or attached an Office communication concerning this application or proceeding.

The time period for reply, if any, is set in the attached communication.

UNITED STATES PATENT AND TRADEMARK OFFICE

Commissioner for Patents
United States Patent and Trademark Office
P.O. Box 1450
Alexandria, VA 22313-1450
www.uspto.gov

PATENT PROSECUTION
O2MIRCO , INC.
3118 PATRICK HENRY DRIVE
SANTA CLARA CA 95054

In re Application of	:	
KUO et al.	:	DECISION ON PETITION
Application No. 13/028,626	:	TO MAKE SPECIAL UNDER
Filed: February 16, 2011	:	THE GREEN TECHNOLOGY
Attorney Docket No. 02-0781	:	PILOT PROGRAM

This is a decision on the petition under 37 CFR 1.102, filed on February 16, 2011, to make the above-identified application special under the pilot program for applications pertaining to Green Technologies as set forth 74 Federal Register Notice 64666 (December 8, 2009) and amended by 75 Federal Register Notice 28554 (May 21, 2010) and 75 Federal Register Notice 69049 (November 10, 2010).

The petition is **GRANTED**.

A grantable petition to make an application special under 37 CFR 1.102 and the pilot program as set forth in 74 FR 64666 must be directed to a nonprovisional application filed under 35 USC 111(a) or be a national stage entry under 35 USC 371, exclusive of any reissue applications.

In order to qualify for special status, the following requirements must be met. 1) The application must have no more than 3 independent claims and no more than 20 total claims. 2) The application must not contain any multiple dependent claims. 3) The petition must state the basis for seeking special status, i.e., the claimed invention either: A) materially enhances the quality of the environment or B) materially contributes to: i) the discovery or development of renewable energy resources, ii) the more efficient utilization and conservation of energy resources, or iii) greenhouse gas emission reduction. 4) If the disclosure is not clear on its face that the claimed invention materially contributes under category (A) or (B), the petition must be accompanied by a statement by the applicant, assignee, or an attorney/agent registered to practice before the Office explaining how the materiality standard is met. 5) A statement that applicant will agree to make an election without traverse in a telephonic interview if a restriction requirement is made by the examiner. 6) The petition to make special must be filed electronically. 7) The petition must be filed at least one day prior to the date that a first Office Action appears in the Patent Application Information Retrieval (PAIR) system. 8) The petition must be accompanied by a request for early publication in compliance with 37 CFR 1.219 and include the publication fee as set forth in 37 CFR 1.18(d).

The requirement for a fee for consideration of the petition to make special for applications pertaining to Green Technologies has been waived.

The instant petition complies with items 1 – 8 above. Accordingly, the above-identified application has been accorded "special" status.

Telephone inquires concerning this decision should be directed to Colleen Dunn at 571-272-1170.

The application is being forwarded to the appropriate Technology Center Art Unit for action on the merits commensurate with this decision.

/Colleen Dunn/

Colleen Dunn
TQAS, TC 2800

UNITED STATES PATENT AND TRADEMARK OFFICE

Commissioner for Patents
United States Patent and Trademark Office
P.O. Box 1450
Alexandria, VA 22313-1450
www.uspto.gov

MAILED
FEB 14 2012
OFFICE OF PETITIONS

LOWE HAUPTMAN HAM & BERNER, LLP
1700 DIAGONAL ROAD
SUITE 300
ALEXANDRIA VA 22314

In re Application of	:	
Park et al.	:	
Application No. 13/028,722	:	ON PETITION
Filed:02/16/2011	:	
Attorney Docket Number: 2336-811	:	

This is in response to the Petition Under 37 CFR 1.84(a)(2) For Acceptance of Colored Drawings, filed in the United States Patent and Trademark Office (USPTO) on March 24, 2011.

The petition is **DISMISSED**.

Any request for reconsideration of this decision must be submitted within **TWO (2) MONTHS** from the mail date of this decision. Extensions of time under 37 CFR 1.136(a) are permitted. The reconsideration request should include a cover letter entitled, "Renewed Petition under 37 CFR 1.84(a)(2)". No further petition fee is required for a renewed petition.

37 CFR 1.84(a)(2) states that the Office will accept color drawings only after granting a petition explaining why color drawings are necessary. The petition must include:

(i) The fee set forth in 1.17(h);

(ii) Three (3) sets of color drawings;[1]

(iii) An amendment to the specification to insert (unless the specification contains or has been previously amended to contain) the following language as the first paragraph of the brief description of the drawings:

[1] The requirement for three (3) sets of color drawings is not applicable to color drawings submitted via EFS-Web. Therefore, only one set of color drawings is necessary when filing via EFS-Web. See MPEP 502.05(VIII)(C).

> The patent or application file contains at least one drawing executed in color. Copies of this patent or patent application publication with color drawing(s) will be provided by the Office upon request and payment of the necessary fee.

In addition, MPEP 608.02 states that a petition to accept color drawings will only be granted where the Office "has determined that a color drawings or photograph is the only practical medium by which to disclose in a printed utility patent the subject matter to be patented."

Petitioners request that one sheet of colored drawing, containing Figure 4, be accepted because the colored drawing is the only practicable medium for illustrating the disclosed subject matter and it is further submitted that the colored drawing is of sufficient quality so that all details of the drawing is reproducible on the printed patent.

Petitioner's argument has been considered, but is not persuasive. The Office has determined that color drawings or photographs are not the only practical medium by which to disclose in a printed utility patent the subject matter to be patented. MPEP 608.02, Section IX, DRAWINGS SYMBOLS provide graphic symbols that should be used to indicate various materials where the material is an important feature of the invention.

As color drawings or photographs are not necessary for an understanding of the invention sought to be patented, the petition is dismissed.

Further correspondence with respect to this matter should be addressed as follows:

By mail: Mail Stop Petitions
Commissioner for Patents
PO Box 1450
Alexandria VA 22313-1450

By FAX: 571-273-8300
Attn: Office of Petitions

A reply may also be filed via EFS-Web.

The application is being forwarded to Group Art Unit 2832.

Telephone inquiries regarding this decision should be directed to the undersigned at (571)272-3231.

DWood

Douglas I. Wood
Senior Petitions Attorney
Office of Petitions

UNITED STATES PATENT AND TRADEMARK OFFICE

UNITED STATES DEPARTMENT OF COMMERCE
United States Patent and Trademark Office
Address: COMMISSIONER FOR PATENTS
P.O. Box 1450
Alexandria, Virginia 22313-1450
www.uspto.gov

APPLICATION NO.	FILING DATE	FIRST NAMED INVENTOR	ATTORNEY DOCKET NO.	CONFIRMATION NO.
13/028,770	02/16/2011	Seiji Umemoto	110138	9395

38834 7590 05/03/2011
WESTERMAN, HATTORI, DANIELS & ADRIAN, LLP
1250 CONNECTICUT AVENUE, NW
SUITE 700
WASHINGTON, DC 20036

EXAMINER

ART UNIT	PAPER NUMBER
1746	

NOTIFICATION DATE	DELIVERY MODE
05/03/2011	ELECTRONIC

Please find below and/or attached an Office communication concerning this application or proceeding.

The time period for reply, if any, is set in the attached communication.

Notice of the Office communication was sent electronically on above-indicated "Notification Date" to the following e-mail address(es):

patentmail@whda.com

UNITED STATES PATENT AND TRADEMARK OFFICE

Commissioner for Patents
United States Patent and Trademark Office
P.O. Box 1450
Alexandria, VA 22313-1450
www.uspto.gov

CST

May 2, 2011

In re application of Seiji Umemoto et al Serial No. 13/028,770 Filed: February 16, 2011 For: MATERIAL ROLL AND SYSTEM AND METHOD FOR MANUFACTURING OPTICAL DISPLAY DEVICE	:	DECISION ON REQUEST TO PARTICIPATE IN PATENT PROSECUTION HIGHWAY PROGRAM AND PETITION TO MAKE SPECIAL UNDER 37 CFR 1.102(a)

This is a decision on the request to participate in the Patent Prosecution Highway (PPH) program filed March 10, 2011.

The request and petition are **GRANTED**.

A grantable request to participate in the PPH program and petition to make special require:

(1) The U.S. application must validly claim priority under 35 U.S.C. 119(a) to one or more applications filed in the JPO, note where the JPO application with similar claims is not the same application from which the U.S. application claims priority that the applicant must identify the relationship between the JPO application with similar claims and the JPO priority application;

(2) Applicant must submit a copy of:
a. The allowable/patentable claim(s) from the JPO application(s) or if a copy of the allowable/patentable claims is available via the Dossier Access System (DAS) applicant may request the USPTO to obtain a copy from DAS; however, if the USPTO is unable to obtain a copy from the DAS, the applicant will be required to submit a copy;
b. An English translation of the allowable/ patentable claim(s), if applicable; and
c. A statement that the English translation is accurate, if applicable;

(3) Applicant must:
a. Ensure all the claims in the U.S. application must sufficiently correspond or be amended to sufficiently correspond to the allowable/patentable claim(s) in the JPO application(s); and
b. Submit a claims correspondence table in English;

(4) Examination of the U.S. application has not begun;

(5) Applicant must submit:
   a. Documentation of prior office action:
      i. a copy of the office action(s) just prior to the "Decision to Grant a Patent" from each of the JPO application(s) containing the allowable/patentable claims(s) or
      ii. if the allowable/patentable claim(s) are from "Notification of Reasons for Refusal" then the Notification of Reasons for Refusal or
      iii. if the JPO application is a first action allowance then no office action from the JPO is necessary should be indicated on the request/petition form:
      Further, if a copy of the documents from a or b is available via the Dossier Access System (DAS), applicant may request the USPO obtain a copy from the DAS; however, if the USPTO is unable to obtain a copy of the DAS, the applicant will be required to submit a copy;
   b. An English language translation of the JPO Office action from (5)(a)(i)-(ii) above if applicable; and
   c. A statement that the English translation is accurate; and

(6) Applicant must submit:
   a. An IDS listing the documents cited by the JPO examiner in the JPO office action (unless already submitted in this application)
   b. Copies of documents except U.S. patents or U.S. patent application publications (unless already submitted in this application).

The request to participate in the PPH program and petition comply with the above requirements. Accordingly, the above-identified application has been accorded "special" status.

The application is being forwarded to the examiner for action on the merits commensurate with this decision.

Any inquiry regarding this decision should be directed to Christine Tierney, Quality Assurance Specialist, at (571) 272-1055.

All other inquiries concerning the examination or status of the application is accessible in the PAIR system at http://www.uspto.gov/ebc/index.html.

/Christine Tierney/

Christine Tierney
Quality Assurance Specialist
Technology Center 1700

UNITED STATES PATENT AND TRADEMARK OFFICE

UNITED STATES DEPARTMENT OF COMMERCE
United States Patent and Trademark Office
Address: COMMISSIONER FOR PATENTS
P.O. Box 1450
Alexandria, Virginia 22313-1450
www.uspto.gov

APPLICATION NO.	FILING DATE	FIRST NAMED INVENTOR	ATTORNEY DOCKET NO.	CONFIRMATION NO.
13/028,775	02/16/2011	Atsushi SUZUKI	TOSH/0212US	9406

26290 7590 07/14/2011
PATTERSON & SHERIDAN, L.L.P.
3040 POST OAK BOULEVARD
SUITE 1500
HOUSTON, TX 77056

EXAMINER
YOUNG, WAYNE R

ART UNIT	PAPER NUMBER
2627	

MAIL DATE	DELIVERY MODE
07/14/2011	PAPER

Please find below and/or attached an Office communication concerning this application or proceeding.

The time period for reply, if any, is set in the attached communication.

UNITED STATES PATENT AND TRADEMARK OFFICE

Commissioner for Patents
United States Patent and Trademark Office
P.O. Box 1450
Alexandria, VA 22313-1450
www.uspto.gov

PATTERSON & SHERIDAN, L.L.P.
3040 POST OAK BOULEVARD
SUITE 1500
HOUSTON TX 77056

In re Application of	
SUZUKI et al.	**: DECISION ON REQUEST TO**
Application No.: 13/028,775	**: PARTICIPATE IN THE PATENT**
Filed: 16 February 2011	**: PROSECUTION HIGHWAY**
Attorney Docket No.: TOSH/0212US	**: PROGRAM AND PETITION**
For: MAGNETIC DISK DEVICE AND	**: TO MAKE SPECIAL UNDER**
HEAD POSITION CONTROL	**: 37 CFR 1.102(a)**
METHOD	

This is a decision on the request to participate in the Patent Prosecution Highway (PPH) program and the petition under 37 CFR 1.102(a), filed 08 July 2011, to make the above-identified application special.

The request and petition are **GRANTED**.

Discussion

A grantable request to participate in the PPH pilot program and petition to make special require:

1. The U.S. application is

    a. a Paris Convention application which either
        i. validly claims priority under 35 U.S.C. 119(a) and 37 CFR 1.55 to one or more applications filed in the JPO, or
        ii. validly claims priority to a PCT application that contains no priority claims, or
    b. a national stage application under the PCT (an application which entered the national stage in the U.S. from a PCT international application after compliance with 35 U.S.C. 371), which PCT application
        i. validly claims priority to an application filed in the JPO, or
        ii. validly claims priority to a PCT application that contains no priority claims, or
        iii. contains no priority claim, or
    c. a so-called bypass application filed under 35 U.S.C. 111(a) which validly claims benefit under 35 U.S.C. 120 to a PCT application, which PCT application
        i. validly claims priority to an application filed in the JPO, or

ii. validly claims priority to a PCT application that contains no priority claims, or
iii. contains no priority claim;

2. Applicant must submit a copy of:
   a. The allowable/patentable claim(s) from the JPO application(s);
   b. An English translation of the allowable/patentable claim(s) and
   c. A statement that the English translation is accurate;
3. Applicant must:
   a. Ensure all the claims in the U.S. application must sufficiently correspond or be amended to sufficiently correspond to the allowable/patentable claim(s) in the JPO application(s) and
   b. Submit a claims correspondence table in English;
4. Examination of the U.S. application has not begun;
5. Applicant must submit:
   a. Documentation of prior office action:
      i. a copy of the office action(s) just prior to the "Decision to Grant a Patent" from each of the JPO application(s) containing the allowable/patentable claim(s) or
      ii. if the allowable/patentable claims(s) are from a "Notification of Reasons for Refusal" then the Notification of Reasons for Refusal or
      iii. if the JPO application is a first action allowance then no office action from the JPO is necessary should be indicated on the request/petition form;
   b. An English language translation of the JPO Office action from (5)(a)(i)-(ii) above
   c. A statement that the English translation is accurate;
6. Applicant must submit:
   a. An IDS listing the documents cited by the JPO examiner in the JPO office action (unless already submitted in this application)
   b. Copies of the documents except U.S. patents or U.S. patent application publications (unless already submitted in this application);

The request to participate in the PPH pilot program and petition comply with the above requirements. Accordingly, the above-identified application has been accorded "special" status.

Inquiries concerning this decision should be directed to Lee W. Young at 571-272-4549.

All other inquiries concerning the examination or status of the application is accessible in the PAIR system at http://www.uspto.gov/ebc.index.html.

This application will be forwarded to the examiner for action on the merits commensurate with this decision once this application's formality reviews have been completed.

Lee W. Young
TQAS, Technology Center 2600

Doc Code: PET.GREEN
Document Description: Petition for Green Tech Pilot

PTO/SB/420 (05-10)
Approved for use through 05/31/2010. OMB 0651-0062
U.S. Patent and Trademark Office; U. S. DEPARTMENT OF COMMERCE
Under the Paperwork Reduction Act of 1995, no persons are required to respond to a collection of information unless it displays a valid OMB control number.

PETITION TO MAKE SPECIAL UNDER THE GREEN TECHNOLOGY PILOT PROGRAM

Attorney Docket Number: 3449-1636PUS1	Application Number (if known): 13/028,780	Filing date: February 16, 2011
First Named Inventor: Sun Kyung KIM		
Title: LIGHT EMITTING DEVICE, LIGHT EMITTING DEVICE PACKAGE, AND LIGHTING SYSTEM		

APPLICANT HEREBY REQUESTS TO PARTICIPATE IN THE GREEN TECHNOLOGY PILOT PROGRAM FOR THE ABOVE-IDENTIFIED APPLICATION. See Instruction Sheet on page 2.

This petition must be timely filed electronically using the USPTO electronic filing system, EFS-Web.

1. By filing this petition:

   Applicant is requesting early publication: Applicant hereby requests early publication under 37 CFR 1.219 and the publication fee set forth in 37 CFR 1.18(d) accompanies this request.

2. By filing this petition: applicant is agreeing to make an election without traverse in a telephonic interview and elect an invention that meets the eligibility requirements set forth in the notice titled "Pilot Program for Green Technologies Including Greenhouse Gas Reduction," as modified by the notice titled "Elimination of Classification Requirement in the Green Technology Pilot Program," each of which was published in the Federal Register, if the Office determines that the claims are not obviously directed to a single invention.

3. This request is accompanied by statements of special status for the eligibility requirement.

4. The application contains no more than three (3) independent claims and twenty (20) total claims.

5. The application does not contain any multiple dependent claims.

6. Other attachments: _____

Signature	Date May 20, 2011
Name (Print/Typed) James T. Eller, Jr.	Registration Number 39538

Note: *Signatures of all the inventors or assignees of record of the entire interest or their representative(s) are required in accordance with 37 CFR 1.33 and 11.18. Please see 37 CFR 1.4(d) for the form of the signature. If necessary, submit multiple forms for more than one signature, see below*.*

☐ *Total of _____ forms are submitted.

The information is required to obtain or retain a benefit by the public which is to file (and by the USPTO to process) an application. Confidentiality is governed by 35 U.S.C. 122 and 37 CFR 1.11 and 1.14. This collection is estimated to take 12 hours to complete, including gathering, preparing, and submitting the completed application form to the USPTO. Time will vary depending upon the individual case. Any comments on the amount of time you require to complete this form and/or suggestions for reducing this burden, should be sent to the Chief Information Officer, U.S. Patent and Trademark Office, U.S. Department of Commerce, P.O. Box 1450, Alexandria, VA 22313-1450. DO NOT SEND FEES OR COMPLETED FORMS TO THIS ADDRESS. **SEND TO: Commissioner for Patents, P.O. Box 1450, Alexandria, VA 22313-1450.**

If you need assistance in completing the form, call 1-800-PTO-9199 and select option 2.

Docket No.: 3449-1636PUS1
(Patent)

IN THE UNITED STATES PATENT AND TRADEMARK OFFICE

Patent Application of:	Sun Kyung KIM	
Application No.:	13/028,780	Confirmation No.: 9419
Filed:	February 16, 2011	Art Unit:
For:	LIGHT EMITTING DEVICE, LIGHT EMITTING DEVICE PACKAGE, AND LIGHTING SYSTEM	Examiner:

STATEMENT OF SPECIAL STATUS FOR THE ELIGIBILITY REQUIREMENT UNDER THE GREEN TECHNOLOGY PILOT PROGRAM

Commissioner for Patents
P.O. Box 1450
Alexandria, VA 22313-1450

Sir:

In support of the Petition to Make Special Under the Green Technology Pilot Program, it is respectfully submitted that the basis for the requested special status is that the invention claimed in the above-identified patent application materially contributes to the development of environmental quality and energy conservation. Specifically, the claimed invention relates to a light emitting device made of semiconductor materials. Independent claims 1, 9 and 10 recite a light emitting device comprised of various semiconductor layers.

Light emitting devices made of semiconductor materials have a much longer life-span than conventional light sources such as fluorescent tubes or other traditional light sources. Light emitting devices made of semiconductor materials also use less energy or power to operate than other traditional light sources. Thus, the environmental quality is significantly improved and energy is conserved.

Additionally, by filing this petition, Applicant agrees to make an election without traverse in a telephone interview and elect an invention that meets the eligibility requirements set forth in the notice titled "Pilot Program for Green Technologies Including Greenhouse Gas Reduction,"

as modified by the notice titled "Elimination of Classification Requirement in the Green Technology Pilot Program," each of which was published in the Federal Register, if the Office determines that the claims are not obviously directed to a single invention.

It is also submitted that this application meets the eligibility requirements to participate in the Green Technology Pilot Program, as listed in the attached Petition to Make Special Under the Green Technology Pilot Program.

Accordingly, it is respectfully requested the Petition be granted.

Should there be any outstanding matters that need to be resolved in the present application, the Examiner is respectfully requested to contact the undersigned below to conduct an interview in an effort to expedite prosecution in connection with the present application.

If necessary, the Director is hereby authorized in this, concurrent, and future replies to charge any fees required during the pendency of the above-identified application or credit any overpayment to Deposit Account No. 02-2448.

Dated: May 20, 2011

Respectfully submitted,

By _____

James T. Eller, Jr.
Registration No.: 39538
BIRCH, STEWART, KOLASCH & BIRCH, LLP
8110 Gatehouse Road, Suite 100 East
P.O. Box 747
Falls Church, VA 22040-0747
703-205-8000

UNITED STATES PATENT AND TRADEMARK OFFICE

UNITED STATES DEPARTMENT OF COMMERCE
United States Patent and Trademark Office
Address: COMMISSIONER FOR PATENTS
P.O. Box 1450
Alexandria, Virginia 22313-1450
www.uspto.gov

APPLICATION NO.	FILING DATE	FIRST NAMED INVENTOR	ATTORNEY DOCKET NO.	CONFIRMATION NO.
13/028,780	02/16/2011	Sun Kyung KIM	3449-1636PUS1	9419

2292 7590 05/26/2011
BIRCH STEWART KOLASCH & BIRCH
PO BOX 747
FALLS CHURCH, VA 22040-0747

EXAMINER

ART UNIT	PAPER NUMBER
2811	

NOTIFICATION DATE	DELIVERY MODE
05/26/2011	ELECTRONIC

Please find below and/or attached an Office communication concerning this application or proceeding.

The time period for reply, if any, is set in the attached communication.

Notice of the Office communication was sent electronically on above-indicated "Notification Date" to the following e-mail address(es):

mailroom@bskb.com

UNITED STATES PATENT AND TRADEMARK OFFICE

Commissioner for Patents
United States Patent and Trademark Office
P.O. Box 1450
Alexandria, VA 22313-1450
www.uspto.gov

BIRCH STEWART KOLASCH & BIRCH
PO BOX 747
FALLS CHURCH VA 22040-0747

In re Application of	:	
Sun Kyung KIM	:	DECISION ON PETITION
Application No. 13/028,780	:	TO MAKE SPECIAL UNDER
Filed: February 16, 2011	:	THE GREEN TECHNOLOGY
Attorney Docket No. 3449-1636PUS1	:	PILOT PROGRAM

This is a decision on the petition under 37 CFR 1.102, filed on May 20, 2011, to make the above-identified application special under the pilot program for applications pertaining to Green Technologies as set forth 74 Federal Register Notice 64666 (December 8, 2009) and amended by 75 Federal Register Notice 28554 (May 21, 2010) and 75 Federal Register Notice 69049 (November 10, 2010).

The petition is **GRANTED**.

A grantable petition to make an application special under 37 CFR 1.102 and the pilot program as set forth in 74 FR 64666 must be directed to a nonprovisional application filed under 35 USC 111(a) or be a national stage entry under 35 USC 371, exclusive of any reissue applications.

In order to qualify for special status, the following requirements must be met. 1) The application must have no more than 3 independent claims and no more than 20 total claims. 2) The application must not contain any multiple dependent claims. 3) The petition must state the basis for seeking special status, i.e., the claimed invention either: A) materially enhances the quality of the environment or B) materially contributes to: i) the discovery or development of renewable energy resources, ii) the more efficient utilization and conservation of energy resources, or iii) greenhouse gas emission reduction. 4) If the disclosure is not clear on its face that the claimed invention materially contributes under category (A) or (B), the petition must be accompanied by a statement by the applicant, assignee, or an attorney/agent registered to practice before the Office explaining how the materiality standard is met. 5) A statement that applicant will agree to make an election without traverse in a telephonic interview if a restriction requirement is made by the examiner. 6) The petition to make special must be filed electronically. 7) The petition must be filed at least one day prior to the date that a first Office Action appears in the Patent Application Information Retrieval (PAIR) system. 8) The petition must be accompanied by a request for early publication in compliance with 37 CFR 1.219 and include the publication fee as set forth in 37 CFR 1.18(d).

The requirement for a fee for consideration of the petition to make special for applications pertaining to Green Technologies has been waived.

The instant petition complies with items 1 – 8 above. Accordingly, the above-identified application has been accorded "special" status.

Telephone inquires concerning this decision should be directed to Lee W. Young at 571-272-4549.

The application is being forwarded to the Technology Center Art Unit 2811 for action on the merits commensurate with this decision.

Lee W. Young
Quality Assurance Specialist
Technology Center 2800

PTO/SB/20PCT-EP (05-10)
Approved for use through 01/31/2012. OMB 0651-0058
U.S. Patent and Trademark Office; U. S. DEPARTMENT OF COMMERCE
Under the Paperwork Reduction Act of 1995, no persons are required to respond to a collection of information unless it displays a valid OMB control number.

REQUEST FOR PARTICIPATION IN THE PATENT COOPERATION TREATY - PATENT PROSECUTION HIGHWAY (PCT-PPH) PILOT PROGRAM BETWEEN THE EUROPEAN PATENT OFFICE (EPO) AND THE USPTO

Application No:	13/028,787	Filing date:	February 16, 2011
First Named Inventor:	Lesslie L. Deck		
Title of the Invention:	INTERFEROMETRIC ENCODER SYSTEMS		

THIS REQUEST FOR PARTICIPATION IN THE PCT-PPH PILOT PROGRAM ALONG WITH THE REQUIRED DOCUMENTS MUST BE SUBMITTED VIA EFS-WEB. INFORMATION REGARDING EFS-WEB IS AVAILABLE AT HTTP://WWW.USPTO.GOV/EBC/EFS_HELP.HTML

APPLICANT HEREBY REQUESTS PARTICIPATION IN THE PCT-PPH PROGRAM AND PETITIONS TO MAKE THE ABOVE-IDENTIFIED APPLICATION SPECIAL UNDER THE PCT-PPH PROGRAM.

The above-identified application is (1) a national stage entry of the corresponding PCT application, or (2) a national stage entry of another PCT application which claims priority to the corresponding PCT application, or (3) a national application that claims domestic/ foreign priority to the corresponding PCT application, or (4) a national application which forms the basis for the priority claim in the corresponding PCT application, or (5) a continuing application of a U.S. application that satisfies one of (1) to (4) above, or (6) a U.S. application that claims domestic benefit to a U.S. provisional application which forms the basis for the priority claim in the corresponding PCT application.

The corresponding PCT application number(s) is/are: PCT/US2011/025039

The international filing date of the corresponding PCT application(s) is/are: February 16, 2011

I. List of Required Documents:

a. **A copy of the latest international work product (WO/ISA, WO/IPEA, or IPER) in the above-identified corresponding PCT application(s)**

☐ Is attached

☒ Is not attached because the document is already in the U.S. application.

b. **A copy of all claims which were indicated as having novelty, inventive step and industrial applicability in the above-identified corresponding PCT application(s).**

☒ Is attached.

☐ Is not attached because the document is already in the U.S. application.

c. **English translations of the documents in a. and b. above are attached (if the documents are not in the English language). A statement that the English translation is accurate is attached for the document in b. above.**

This collection of information is required by 35 U.S.C. 119, 37 CFR 1.55, and 37 CFR 1.102(d). The information is required to obtain or retain a benefit by the public, which is to file (and by the USPTO to process) an application. Confidentiality is governed by 35 U.S.C. 122 and 37 CFR 1.11 and 1.14. This collection is estimated to take 2 hours to complete, including gathering, preparing, and submitting the completed application form to the USPTO. Time will vary depending upon the individual case. Any comments on the amount of time you require to complete this form and/or suggestions for reducing this burden should be sent to the Chief Information Officer, U.S. Patent and Trademark Office, U.S. Department of Commerce, P.O. Box 1450, Alexandria, VA 22313-1450. DO NOT SEND FEES OR COMPLETED FORMS TO THIS ADDRESS.

Approved for use through 01/31/2012. OMB 0651-0058
U.S.Patent and Trademark Office; U.S. DEPARTMENT OF COMMERCE

Under the Paperwork Reduction Act of 1995, no persons are required to respond to a collection of information unless it displays a valid OMB control number.

REQUEST FOR PARTICIPATION IN THE PCT-PPH PILOT PROGRAM BETWEEN THE EPO AND THE USPTO

(continued)

Application No.:	
First Named Inventor:	

d. **(1) An information disclosure statement listing the documents cited in the international work products (ISR, WO/ISA, WO/IPEA, IPER) of the corresponding PCT application.**

☐ Is attached

☒ Has already been filed in the above-identified U.S. application on November 10, 2011

(2) Copies of all documents (except) for U.S. patents or U.S. patent application publications)

☐ Are attached.

☒ Have already been filed in the above-identified U.S. application on November 10, 2011

II. Claims Correspondence Table:

Claims in US Application	Patentable Claims in the corresponding PCT Application	Explanation regarding the correspondence
		See attached sheet

III. All the claims in the US application sufficiently correspond to the patentable claims in the corresponding PCT application.

Signature	Date 12/14/2011
Name (Print/Typed) Chris C. Bowley	Registration Number 55,016

Privacy Act Statement

The **Privacy Act of 1974 (P.L. 93-579)** requires that you be given certain information in connection with your submission of the attached form related to a patent application or patent. Accordingly, pursuant to the requirements of the Act, please be advised that: (1) the general authority for the collection of this information is 35 U.S.C. 2(b)(2); (2) furnishing of the information solicited is voluntary; and (3) the principal purpose for which the information is used by the U.S. Patent and Trademark Office is to process and/or examine your submission related to a patent application or patent. If you do not furnish the requested information, the U.S. Patent and Trademark Office may not be able to process and/or examine your submission, which may result in termination of proceedings or abandonment of the application or expiration of the patent.

The information provided by you in this form will be subject to the following routine uses:

1. The information on this form will be treated confidentially to the extent allowed under the Freedom of Information Act (5 U.S.C. 552) and the Privacy Act (5 U.S.C 552a). Records from this system of records may be disclosed to the Department of Justice to determine whether disclosure of these records is required by the Freedom of Information Act.
2. A record from this system of records may be disclosed, as a routine use, in the course of presenting evidence to a court, magistrate, or administrative tribunal, including disclosures to opposing counsel in the course of settlement negotiations.
3. A record in this system of records may be disclosed, as a routine use, to a Member of Congress submitting a request involving an individual, to whom the record pertains, when the individual has requested assistance from the Member with respect to the subject matter of the record.
4. A record in this system of records may be disclosed, as a routine use, to a contractor of the Agency having need for the information in order to perform a contract. Recipients of information shall be required to comply with the requirements of the Privacy Act of 1974, as amended, pursuant to 5 U.S.C. 552a(m).
5. A record related to an International Application filed under the Patent Cooperation Treaty in this system of records may be disclosed, as a routine use, to the International Bureau of the World Intellectual Property Organization, pursuant to the Patent Cooperation Treaty.
6. A record in this system of records may be disclosed, as a routine use, to another federal agency for purposes of National Security review (35 U.S.C. 181) and for review pursuant to the Atomic Energy Act (42 U.S.C. 218(c)).
7. A record from this system of records may be disclosed, as a routine use, to the Administrator, General Services, or his/her designee, during an inspection of records conducted by GSA as part of that agency's responsibility to recommend improvements in records management practices and programs, under authority of 44 U.S.C. 2904 and 2906. Such disclosure shall be made in accordance with the GSA regulations governing inspection of records for this purpose, and any other relevant (*i.e.*, GSA or Commerce) directive. Such disclosure shall not be used to make determinations about individuals.
8. A record from this system of records may be disclosed, as a routine use, to the public after either publication of the application pursuant to 35 U.S.C. 122(b) or issuance of a patent pursuant to 35 U.S.C. 151. Further, a record may be disclosed, subject to the limitations of 37 CFR 1.14, as a routine use, to the public if the record was filed in an application which became abandoned or in which the proceedings were terminated and which application is referenced by either a published application, an application open to public inspection or an issued patent.
9. A record from this system of records may be disclosed, as a routine use, to a Federal, State, or local law enforcement agency, if the USPTO becomes aware of a violation or potential violation of law or regulation.

Attorney Docket No.: 09712-0540001 / Z-608

IN THE UNITED STATES PATENT AND TRADEMARK OFFICE

Applicant : Leslie L. Deck et al.
Serial No. : 13/028,787
Filed : February 16, 2011
Title : INTERFEROMETRIC ENCODER SYSTEMS

Art Unit : 2886
Examiner : Jonathan M. Hansen
Conf. No. : 9435

Commissioner for Patents
P.O. Box 1450
Alexandria, VA 22313-1450

CLAIM CHART

Claims in US Application	**Patentable Claims in the corresponding PCT Application**	**Explanation regarding the correspondence**
1-12, 16-32, 36-37, 41, 44-48, 51-61, 63	1-12, 16-32, 36-37, 41, 44-48, 51-61, 63	Each US claim is identical to the corresponding PCT claim
13-15	77-79	Each US claim is identical to the corresponding PCT claim
33-35	80-82	Each US claim is identical to the corresponding PCT claim
38-40	83-85	Each US claim is identical to the corresponding PCT claim
42-43	86-87	Each US claim is identical to the corresponding PCT claim
49-50	88-89	Each US claim is identical to the corresponding PCT claim
62	90	Each US claim is identical to the corresponding PCT claim
73-76	91-94	Each US claim is identical to the corresponding PCT claim

Please apply any charges or credits to Deposit Account No. 06-1050, referencing Docket No. 09712-0540001.

Respectfully submitted,

Date: 12/14/2011

Chris C. Bowley
Reg. No. 55,016

Customer Number 26211
Fish & Richardson P.C.
Telephone: (212) 765-5070
Facsimile: (877) 769-7945

30656544.doc

UNITED STATES PATENT AND TRADEMARK OFFICE

Commissioner for Patents
United States Patent and Trademark Office
P.O. Box 1450
Alexandria, VA 22313-1450
www.uspto.gov

FISH & RICHARDSON P.C. (NY)
P.O. BOX 1022
MINNEAPOLIS MN 55440-1022

MAILED
MAR 22 2012
OFFICE OF PETITIONS

In re Application of
Leslie L. Deck et al.
Application No.: 13/028,787
Filed: February 16, 2011
Attorney Docket No.: 09712-0540001 / Z-608
For: INTERFEROMETRIC ENCODER SYSTEMS

: DECISION ON REQUEST TO
: PARTICIPATE IN THE PATENT
: PROSECUTION HIGHWAY
: PROGRAM AND PETITION
: TO MAKE SPECIAL UNDER
: 37 CFR 1.102(a)

This is a decision on the request to participate in the PCT Patent Prosecution Highway (PCT-PPH) pilot program and the petition under 37 CFR 1.102(a), filed on December 14, 2011, to make the above-identified application special.

The request and petition are **DISMISSED**.

Discussion

A grantable request to participate in the PCT-PPH pilot program and petition to make special require:

(1) The U.S. application must have an eligible relationship to one or more PCT applications where the ISA or IPEA are the JPO, EPO, KIPO, IPAU, Russia, Spain, Finland, Austria, or USPTO;

(2) At least one claim in the PCT application has novelty, inventive step, and industrial applicability and must be free of any observations in Box VIII in the latest work product in the international stage or applicant must identify and explain why the claim(s) is/are not subject to the observation in Box VIII;

(3) Applicant must submit a copy of the claim(s) from the PCT application(s) that have novelty, inventive step, and industrial applicability along with an English translation thereof and a statement that the English translation is accurate, if the claims are not in the English language;

(4) All the claims in the U.S. application must sufficiently correspond or be amended to sufficiently correspond to the claim(s) that have novelty, inventive step, and industrial applicability in the PCT application(s);

(5) Examination of the U.S. application has not begun;

(6) Applicant must submit a copy of the latest international work product from the PCT application indicating that the claim(s) have novelty, inventive step, and industrial applicability along with an English translation thereof.

(7) Applicant must submit an IDS listing the documents cited by the PCT examiner in the international work product along with copies of documents except U.S. patents or U.S. patent application publications.

(8) Applicant is required to submit a claims correspondence table in English which indicates how all the claims in the U.S. application correspond to the claims indicated as having novelty, inventive step and industrial applicability in the latest international work product.

Requirements (1), (2), and (5-8) above are considered to have been met. However, the request to participate in the PPH pilot program and petition fail to meet requirement (3).

Regarding the requirement of condition (3), applicant has failed to submit a copy of the claims from the PCT.

Regarding the requirement of condition (4), it cannot be determined if requirement (4) has been met since requirement (3) has not been met. Applicant is responsible for ensuring that the claims in the U.S. application sufficiently correspond to the claims that have novelty, inventive step, and industrial applicability in the PCT application.

Applicant is given **ONE** opportunity within a time period of **ONE MONTH or THIRTY DAYS**, whichever is longer, from the mailing date of this decision to correct the deficiencies. **NO EXTENSION OF TIME UNDER 37 CFR 1.136 IS PERMITTED.** If the deficiencies are not corrected with the time period given, the application will await action in its regular turn.

Response must be filed via the Electronic Filing System (EFS) using the document description: Petition to make special under PCT – Patent Pros Hwy. Any preliminary amendments and IDS submitted with the PPH documents must be separately indexed as a preliminary amendment and IDS, respectively.

Telephone inquiries concerning this decision should be directed to Irvin Dingle at 571-272-3210.

All other inquiries concerning the examination or status of the application is accessible in the PAIR system at http://www.uspto.gov/ebc/index.html.

David Bucci
Petitions Examiner
Office of Petitions

Attorney Docket No.: 09712-0540001 / Z-608

IN THE UNITED STATES PATENT AND TRADEMARK OFFICE

Applicant	: Leslie L. Deck et al.	Art Unit	: 2886
Serial No.	: 13/028,787	Examiner	: Jonathan M. Hansen
Filed	: February 16, 2011	Conf. No.	: 9435
Title	: INTERFEROMETRIC ENCODER SYSTEMS		

Commissioner for Patents
P.O. Box 1450
Alexandria, VA 22313-1450

RESPONSE TO DECISION ON REQUEST TO PARTICIPATE IN PPH PROGRAM AND PETITION UNDER 37 C.F.R. § 1.102(A)

In response to the dismissal of applicants' Request and Petition, mailed March 22, 2012, applicants submit herewith a copy of the claims from PCT application PCT/US2011/025039, as well as a corrected claims table.

Applicants submit that, in view of this submission, conditions (3) and (4) set forth in the Decision on Request are satisfied.

In view of the above, applicants ask the Office to reconsider applicants' Petition.

Please apply any charges or credits to Deposit Account No. 06-1050.

Respectfully submitted,

Date: April 13, 2012

/ Chris Bowley, Reg. No. 55,016 /
Chris C. Bowley
Reg. No. 55,016

Customer Number 26211
Fish & Richardson P.C.
Telephone: (617) 542-5070
Facsimile: (877) 769-7945

22826468.doc

Doc Code: PET.GREEN
Document Description: Petition for Green Tech Pilot

PTO/SB/420 (11-10)
Approved for use through 01/31/2011. OMB 0651-0062
U.S. Patent and Trademark Office; U. S. DEPARTMENT OF COMMERCE
Under the Paperwork Reduction Act of 1995, no persons are required to respond to a collection of information unless it displays a valid OMB control number.

PETITION TO MAKE SPECIAL UNDER THE GREEN TECHNOLOGY PILOT PROGRAM

Attorney Docket Number: 83171335	Application Number (if known): 13/028,872	Filing date: February 16, 2011
First Named Inventor: Ralph Wayne Cunningham		
Title: SPARK PLUG DEGRADATION DETECTION		

APPLICANT HEREBY REQUESTS TO PARTICIPATE IN THE GREEN TECHNOLOGY PILOT PROGRAM FOR THE ABOVE-IDENTIFIED APPLICATION. See Instruction Sheet on page 2.

This petition must be timely filed electronically using the USPTO electronic filing system, EFS-Web.

1. By filing this petition:

   Applicant is requesting early publication: Applicant hereby requests early publication under 37 CFR 1.219 and the publication fee set forth in 37 CFR 1.18(d) accompanies this request.

2. By filing this petition: applicant is agreeing to make an election without traverse in a telephonic interview and elect an invention that meets the eligibility requirements for the Green Technology Pilot Program, if the Office determines that the claims are not obviously directed to a single invention. See Instruction Sheet.

3. This request is accompanied by statements of special status for the eligibility requirement.

4. The application contains no more than three (3) independent claims and twenty (20) total claims.

5. The application does not contain any multiple dependent claims.

6. Other attachments: _____

Signature	Date March 1, 2011
Name (Print/Typed) John D. Russell	Registration Number 47,048

Note: *Signatures of all the inventors or assignees of record of the entire interest or their representative(s) are required in accordance with 37 CFR 1.33 and 11.18. Please see 37 CFR 1.4(d) for the form of the signature. If necessary, submit multiple forms for more than one signature see below*.*

☒ *Total of 1 forms are submitted.

The information is required to obtain or retain a benefit by the public which is to file (and by the USPTO to process) an application. Confidentiality is governed by 35 U.S.C. 122 and 37 CFR 1.11 and 1.14. This collection is estimated to take 12 hours to complete, including gathering, preparing, and submitting the completed application form to the USPTO. Time will vary depending upon the individual case. Any comments on the amount of time you require to complete this form and/or suggestions for reducing this burden, should be sent to the Chief Information Officer, U.S. Patent and Trademark Office, U.S. Department of Commerce, P.O. Box 1450, Alexandria, VA 22313-1450. DO NOT SEND FEES OR COMPLETED FORMS TO THIS ADDRESS. **SEND TO: Commissioner for Patents, P.O. Box 1450, Alexandria, VA 22313-1450.**

If you need assistance in completing the form, call 1-800-PTO-9199 and select option 2.

IN THE UNITED STATES PATENT AND TRADEMARK OFFICE

Applicants	:	Ralph Wayne Cunningham et al.
Application No.	:	13/028,872
Filed	:	February 16, 2011
Title	:	SPARK PLUG DEGRADATION DETECTION
Group Art Unit	:	3747
Confirmation No.	:	9603
Docket No.	:	83171335

Commissioner for Patents
P.O. Box 1450
Alexandria, VA 22313-1450

CERTIFICATE OF TRANSMISSION

I hereby certify that this correspondence is being transmitted via the U.S. Patent and Trademark Office electronic filing system (EFS-Web) to the USPTO on:

March 1, 2011 — Date

Caitlin Fackrell — Caitlin Fackrell

STATEMENTS OF SPECIAL STATUS

Applicants respectfully request consideration of the following statement concerning the basis for the special status as well as the following statement pertaining to the materiality standard.

I. Statement concerning the basis for special status.

Applicants submit that special status is sought on the following bases: (1) the claimed invention materially contributes to the more efficient utilization and conservation of energy resources; and/or (2) the claimed invention materially contributes to greenhouse gas emission reduction.

II. Statement pertaining to the materiality standard.

As a preliminary matter, Applicants note that the following statement refers explicitly to the elements of independent claim 1, which is the broadest claim.

Regarding basis (1), Applicants submit that the claimed invention materially contributes to the more efficient utilization and conservation of energy resources by improving fuel economy (*e.g.*, more efficiently utilizing and conserving fossil fuels). Specifically, the claimed invention increases accurate detection of pre-ignition events. As explained in the Background and Summary of the subject application, under certain

operating conditions, engines that have high compression ratios, or are boosted to increase specific output, may be prone to low speed pre-ignition combustion events. The early combustion due to pre-ignition can cause high in-cylinder pressures, and can result in combustion pressure waves similar to combustion knock, but with larger intensity. These pre-ignition events can cause engine damage, lessening the likelihood the engine can be operated with boost. Engine boost can lower the engine displacement and reduce engine pumping work and friction, thereby increasing engine efficiency. Further, boosting can increase the engine output so that a smaller boosted engine can produce power that is similar to a larger displacement normally aspirated engine. In this way, engine efficiency can be increased while engine output is maintained, and fuel economy can be improved.

However, in some instances, pre-ignition is caused by a degraded spark plug rather than excessive boost. Inaccurate determination of the cause of pre-ignition can lead to inaccurate mitigating steps to decrease the pre-ignition, resulting in unnecessary reduction of boost and thus an unnecessary decrease in engine efficiency (and thus an unnecessary increase in fuel usage). The claimed invention addresses these issues by accurately determining the cause of pre-ignition.

For example, claim 1 recites:

> A method of controlling an engine cylinder including a spark plug, comprising:
>
> indicating spark plug degradation in a cylinder based on each of misfire and pre-ignition in the cylinder.

That is, in an engine cylinder including a spark plug, spark plug degradation in a cylinder can be indicated based on each of misfire and pre-ignition in the cylinder.

In this way, it is possible to distinguish pre-ignition due to excessive boost or compression ratio from pre-ignition due to spark plug degradation. By doing so, if pre-ignition is determined to be caused by spark plug degradation in a cylinder, combustion in that cylinder may be limited while adequate boost can be maintained in the remaining cylinders. As such, engine efficiency can be maintained, thus reducing fuel consumption that would otherwise by increased by mitigating actions mistakenly taken assuming the pre-ignition was caused by excessive boost.

Regarding basis (2), Applicants submit that the claimed invention materially contributes to greenhouse gas emission reduction as follows. CO_2 is a greenhouse gas produced by the combustion of fossil fuels. As explained above and set forth in claim 1, the claimed invention makes it more likely engine boost levels can be maintained, increasing engine efficiency and thus fuel economy, therefore lowering the amount of CO_2 emissions.

Please charge any cost incurred in this filing, along with any other costs, to Deposit Account No. 06-1510.

Respectfully submitted,

ALLEMAN HALL MCCOY RUSSELL & TUTTLE LLP

John D. Russell
Registration No. 47,048
Customer No. 36865
Attorney/Agent for Applicants/Assignee
806 S.W. Broadway, Suite 600
Portland, Oregon 97205
Telephone: (503) 459-4141
Facsimile: (503) 459-4142

UNITED STATES PATENT AND TRADEMARK OFFICE

UNITED STATES DEPARTMENT OF COMMERCE
United States Patent and Trademark Office
Address: COMMISSIONER FOR PATENTS
P.O. Box 1450
Alexandria, Virginia 22313-1450
www.uspto.gov

APPLICATION NO.	FILING DATE	FIRST NAMED INVENTOR	ATTORNEY DOCKET NO.	CONFIRMATION NO.
13/028,872	02/16/2011	Ralph Wayne Cunningham	83171335	9603

36865 7590 05/24/2011
ALLEMAN HALL MCCOY RUSSELL & TUTTLE, LLP
806 S.W. BROADWAY, SUITE 600
PORTLAND, OR 97205

EXAMINER

ART UNIT	PAPER NUMBER
3747	

MAIL DATE	DELIVERY MODE
05/24/2011	PAPER

Please find below and/or attached an Office communication concerning this application or proceeding.

The time period for reply, if any, is set in the attached communication.

UNITED STATES PATENT AND TRADEMARK OFFICE

Commissioner for Patents
United States Patent and Trademark Office
P.O. Box 1450
Alexandria, VA 22313-1450
www.uspto.gov

ALLEMAN HALL MCCOY RUSSELL & TUTTLE, LLP
806 S.W. BROADWAY, SUITE 600
PORTLAND OR 97205

In re Application of	:	
CUNNINGHAM, RALPH WAYNE et al	:	DECISION ON PETITION
Application No. 13/028,872	:	TO MAKE SPECIAL UNDER
Filed: Feb. 16, 2011	:	THE GREEN TECHNOLOGY
Attorney Docket No. 83171335	:	PILOT PROGRAM

This is a decision on the petition under 37 CFR 1.102, filed Feb. 16, 2011, to make the above-identified application special under the pilot program for applications pertaining to Green Technologies as set forth in 74 Federal Register Notice 64666 (December 8, 2009) and amended by 75 Federal Register Notice 28554 (May 21, 2010) and 75 Federal Register Notice 69049 (November 10, 2010).

The petition is **dismissed**.

If reconsideration of this decision is desired, a petition for reconsideration must be filed within ONE (1) MONTH OR THIRTY (30) DAYS from the mail date of this decision, whichever is longer. No extension of this time limit can be granted under 37 CFR 1.136(a) or (b). The petition for reconsideration should include an exhaustive attempt to provide the lacking item(s) noted below, since, after a decision on the petition for reconsideration, no further reconsideration or review of the matter will be undertaken by the Director.

A grantable petition to make an application special under 37 CFR 1.102 and the pilot program as set forth in 74 FR 64666 must be directed to a nonprovisional application filed under 35 USC 111(a) or be a national stage entry under 35 USC 371, exclusive of any reissue applications.

In order to qualify for special status, the following requirements must be met. 1) The application must have no more than 3 independent claims and no more than 20 total claims. 2) The application must not contain any multiple dependent claims. 3) The petition must state the basis for seeking special status, i.e., the claimed invention either: A) materially enhances the quality of the environment or B) materially contributes to: i) the discovery or development of renewable energy resources, ii) the more efficient utilization and conservation of energy resources, or iii) greenhouse gas emission reduction. 4) If the disclosure is not clear on its face that the claimed

invention materially contributes under category (A) or (B), the petition must be accompanied by a statement by the applicant, assignee, or an attorney/agent registered to practice before the Office explaining how the materiality standard is met. 5) A statement that applicant will agree to make an election without traverse in a telephonic interview if a restriction requirement is made by the examiner. 6) The petition to make special must be filed electronically. 7) The petition must be filed at least one day prior to the date that a first Office Action appears in the Patent Application Information Retrieval (PAIR) system. 8) The petition must be accompanied by a request for early publication in compliance with 37 CFR 1.219 and include the publication fee as set forth in 37 CFR 1.18(d).

The requirement for a fee for consideration of the petition to make special for applications pertaining to Green Technologies has been waived.

In regard to item 4, petitioner should note that the instant petition includes a statement identifying the basis for the special status (i.e., whether the instant invention (1) materially enhances the quality of the environment or materially contributes to (2) development of renewable energy resources or energy conservation, or (3) greenhouse gas reduction) as required by sections II and III of the notice. However, as stated in the notice, applicant must also provide a statement pertaining to the materiality standard if the application disclosure is not clear on its face as to the materiality of the basis for the special status of the invention. This petition lacks such a statement and it is not agreed that the application on its face meets that materiality standard. Petitioner states that the claimed invention relates to green technology. This is not convincing. For example, it is not clear how the claimed computer floppy disk with software instructions and a oxygen and knock sensors will provide and enhance the quality of the environment or contribute to development of renewable energy resources or energy conservation or greenhouse gas reduction. It is also not clear where and what the structural connection is between the spark plug and cylinder and the computer floppy disk. The claimed "controller" is nothing but a computer floppy disk which has nothing to do with green technology.

Any reconsideration of this decision should be submitted through the USPTO electronic filing system, EFS-Web, and selecting the document description of "Petition for Green Tech Pilot" on the EFS-Web screen.

Telephone inquiries concerning this decision should be directed to Henry C. Yuen at 571-272-4856. The application will be forwarded to the Technology Center Art Unit 3747 for action in its regular turn.

/Henry C. Yuen/

Henry C. Yuen
Quality Assurance Specialist
Technology Center 3700

UNITED STATES PATENT AND TRADEMARK OFFICE

Commissioner for Patents
United States Patent and Trademark Office
P.O. Box 1450
Alexandria, VA 22313-1450
www.uspto.gov

BINGHAM MCHALE, LLP
2700 MARKET TOWER
10 WEST MARKET STREET
INDIANAPOLIS, IN 46204-4900

MAILED
MAY 24 2011
OFFICE OF PETITIONS

In re Application of David L. Lowe, et. al. Application No. 13/028,886 Filed: February 16, 2011 Attorney Docket No. 21979-93727	: : : : :	DECISION REFUSING STATUS UNDER 37 CFR 1.47(a)

This is in response to the petition under 37 CFR 1.47(a), filed April 27, 2011.

Rule 47 applicant is given **TWO (2) MONTHS** from the mailing date of this decision to reply, correcting the below-noted deficiencies. Any reply should be entitled "Request for Reconsideration of Petition Under 37 CFR 1.47(a)," and should only address the deficiencies noted below, except that the reply may include an oath or declaration executed by the non-signing inventor. **FAILURE TO RESPOND WILL RESULT IN ABANDONMENT OF THE APPLICATION.** Any extensions of time will be governed by 37 CFR 1.136(a).

A grantable petition under 37 CFR 1.47(a) requires: (1) proof that the non-signing inventor cannot be reached or refuses to sign the oath or declaration after having been presented with the application papers (specification, claims and drawings); (2) an acceptable oath or declaration in compliance with 35 U.S.C. §§ 115 and 116; (3) the petition fee; and (4) a statement of the last known address of the non-signing inventor. Applicant lacks item (4) set forth above.

It is noted that petitioner mailed correspondence to Donald L. Crawmer on March 10, 2011 and April 1, 2011. However, it is unclear if this is the last known mailing address of the non-signing inventor. Therefore, any renewed petition must state the last known address of Mr. Crawmer.

In view of the above, the petition is **DISMISSED**.

Further correspondence with respect to this matter should be addressed as follows:

By Mail: Mail Stop PETITION
Commissioner for Patents
Post Office Box 1450
Alexandria, VA 22313-1450

By Hand: U. S. Patent and Trademark Office
Customer Window, Mail Stop PETITIONS
401 Dulany Street
Alexandria, VA 22314

The centralized facsimile number is (571) 273-8300.

Telephone inquiries should be directed to the undersigned at (571) 272-3226.

Andrea Smith
Petitions Examiner
Office of Petitions

UNITED STATES PATENT AND TRADEMARK OFFICE

Commissioner for Patents
United States Patent and Trademark Office
P.O. Box 1450
Alexandria, VA 22313-1450
www.uspto.gov

BINGHAM MCHALE, LLP
2700 MARKET TOWER
10 WEST MARKET STREET
INDIANAPOLIS, IN 46204-4900

MAILED
JUL 06 2011
OFFICE OF PETITIONS

In re Application of	:	
David L. Lowe, et. al.	:	DECISION REFUSING STATUS
Application No. 13/028,886	:	UNDER 37 CFR 1.47(a)
Filed: February 16, 2011	:	
Attorney Docket No. 21979-93727	:	

This is in response to the renewed petition under 37 CFR 1.47(a), filed June 20, 2011.

The petition is **GRANTED**.

Petitioner has shown that the non-signing inventor refuses to join in the filing of the above-identified application.

The application and papers have been reviewed and found in compliance with 37 CFR 1.47(a). This application is hereby accorded Rule 1.47(a) status.

As provided in 37 CFR 1.47(c), this Office will forward notice of this application's filing to the non-signing inventor at the address given in the petition. Notice of the filing of this application will also be published in the Official Gazette.

Telephone inquiries regarding this decision should be directed to the undersigned at (571) 272-3226.

Andrea Smith
Petitions Examiner
Office of Petitions

UNITED STATES PATENT AND TRADEMARK OFFICE

Commissioner for Patents
United States Patent and Trademark Office
P.O. Box 1450
Alexandria, VA 22313-1450
www.uspto.gov

Donald L. Crawmer
10311 W 350 N
Pennville, IN 47369

MAILED
JUL 06 2011
OFFICE OF PETITIONS

In re Application of
David L. Lowe, et. al.
Application No. 13/028,886
Filed: February 16, 2011
For: HIGH EFFICIENCY CONVERSION OF SOLAR RADIATION INTO THERMAL ENERGY

Dear Mr. Crawmer:

You are named as a joint inventor in the above-identified United States patent application, filed under the provisions of 35 U.S.C. 116 (United States Code), and 37 CFR 1.47(a), Rules of Practice in Patent Cases. Should a patent be granted on the application you will be designated therein as a joint inventor.

As a named inventor you are entitled to inspect any paper in the file wrapper of the application, order copies of all or any part thereof (at a prepaid cost per 37 CFR 1.19) or make your position of record in the application. Alternatively, you may arrange to do any of the preceding through a registered patent attorney or agent presenting written authorization from you. If you care to join the application, counsel of record (see below) would presumably assist you. Joining the application would entail the filing of an appropriate oath or declaration by you pursuant to 37 CFR 1.63.

Telephone inquiries regarding this communication should be directed to the undersigned at (571) 272-3226. Requests for information regarding your application should be directed to the File Information Unit at (703) 308-2733. Information regarding how to pay for and order a copy of the application, or a specific paper in the application, should be directed to the Certification Division at (571) 272-3150 or 1 (800) 972-6382 (outside the Washington, DC area).

Andrea Smith
Petitions Examiner
Office of Petitions

cc: BINGHAM MCHALE, LLP
2700 MARKET TOWER
10 WEST MARKET STREET
INDIANAPOLIS, IN 46204-4900

UNITED STATES PATENT AND TRADEMARK OFFICE

Commissioner for Patents
United States Patent and Trademark Office
P.O. Box 1450
Alexandria, VA 22313-1450
www.uspto.gov

MAILED

OCT 11 2011

OFFICE OF PETITIONS

Cozen O'Connor
277 Park Avenue, 20th floor
NEW YORK NY 10172

In re Application of
Mayer
Application No. 13/028,894
Filed: February 16, 2011
Atty. Dkt. No.: 410001-556-294822

: DECISION REFUSING STATUS
: UNDER 37 CFR 1.47(b)

This decision is in response to the petition under 37 CFR 1.47(b) filed September 30, 2011.

The above-identified application was filed February 16, 2011 without an executed oath or declaration. Accordingly, a Notice to File Missing Parts of Nonprovisional Application (Notice) was mailed March 1, 2011. The Notice, *inter alia*, required a surcharge and an executed oath or declaration.

Applicants have failed to submit an oath or declaration as required by the Notice. While petitioners may submit a petition pursuant to 37 CFR 1.47, failure to submit the required oath or declaration is a direct omission, failing to meet both the requirements of the Notice as well as the requirements of 37 CFR 1.47. As the maximum period of time permitted to submit the required oath or declaration has surpassed, the application is deemed abandoned.

In view thereof, the petition under 37 CFR 1.47(b) is **DISMISSED**.

Petitioners are given TWO MONTHS from the mailing date of this decision to reply. Any reply should be entitled "Request for Reconsideration of Petition Under 37 CFR 1.47(b)." The reply under 37 CFR 1.47(b) may include a petition to revive and, if available, an oath or declaration executed by the non-signing inventor. Any extensions of time will be governed by 37 CFR 1.136(a).

Petitioner may wish to consider filing a petition stating that the entire delay was unintentional. Petitioner's attention is directed to 37 CFR 1.137(b) which provides for the revival of an "unintentionally" abandoned application without a showing that the delay in prosecution or in late payment of an issue fee was "unavoidable". An "unintentional" petition under 37 CFR 1.137(b) must be accompanied by the required petition fee and reply.

The filing of a petition under 37 CFR 1.137(b) cannot be intentionally delayed and therefore must be filed promptly. A person seeking revival due to unintentional delay cannot make a statement that the delay was unintentional unless the entire delay, including the delay from the date it was discovered that the application was abandoned until the filing of the petition to revive

under 37 CFR 1.137(b), was unintentional. A statement that the delay was unintentional is not appropriate if petitioner intentionally delayed the filing of a petition for revival under 37 CFR 1.137(b). The Director may require additional information where there is a question whether the delay was unintentional.

Further correspondence with respect to this matter should be addressed as follows:

By mail: Mail Stop Petition
Commissioner for Patents
P.O. Box 1450
Alexandria, VA 22313-1450

By facsimile: (571) 273-8300

By hand: U.S. Patent and Trademark Office
Customer Window
Mail Stop Petition
Randolph Building
Dulany Street
Alexandria, VA 22314

This application is being directed to the Office of Patent Application Processing for issuance of a Notice of Abandonment.

Telephone inquiries related to this decision may be directed to the undersigned at (571) 272-3205.

/ALESIA M. BROWN/

Alesia M. Brown
Attorney Advisor
Office of Petitions

Doc Code: PET.GREEN
Document Description: Petition for Green Tech Pilot

PTO/SB/420 (03-11)

PETITION TO MAKE SPECIAL UNDER THE GREEN TECHNOLOGY PILOT PROGRAM

Attorney Docket Number: 0317363	Application Number (if known): 13/028,954	Filing date: February 16, 2011

First Named Inventor: Joseph N. Scarbo

Title: Powertrain, Vehicle, and Method with Electric Motors and Dual Belt Drive

APPLICANT HEREBY REQUESTS TO PARTICIPATE IN THE GREEN TECHNOLOGY PILOT PROGRAM FOR THE ABOVE-IDENTIFIED APPLICATION. See Instruction Sheet on page 2.

This petition must be timely filed electronically using the USPTO electronic filing system, EFS-Web.

1. By filing this petition:

   Applicant is requesting early publication: Applicant hereby requests early publication under 37 CFR 1.219 and the publication fee set forth in 37 CFR 1.18(d) accompanies this request.

2. By filing this petition: applicant is agreeing to make an election without traverse in a telephonic interview and elect an invention that meets the eligibility requirements for the Green Technology Pilot Program, if the Office determines that the claims are not obviously directed to a single invention. See Instruction Sheet.

3. This request is accompanied by statements of special status for the eligibility requirement.

4. The application contains no more than three (3) independent claims and twenty (20) total claims.

5. The application does not contain any multiple dependent claims.

6. Other attachments: Preliminary Amendment

Signature	Date 2011-11-08
Name (Print/Typed) Allan W. Watts	Registration Number 45,930

Note: *Signatures of all the inventors or assignees of record of the entire interest or their representative(s) are required in accordance with 37 CFR 1.33 and 11.18. Please see 37 CFR 1.4(d) for the form of the signature. If necessary, submit multiple forms for more than one signature, see below*.*

☐ *Total of 1 forms are submitted.

If you need assistance in completing the form, call 1-800-PTO-9199 and select option 2.

Attorney Docket No.: 0317363

IN THE UNITED STATES PATENT AND TRADEMARK OFFICE

In re Application of	:	Group Art Unit: 3655
	:	
Joseph N. Scarbo, et al.	:	Examiner: TBD
	:	
Application No.: 13/028,954	:	Confirmation No.: 9748
	:	
Filed: February 16, 2011	:	
	:	
Title: **Powertrain, Vehicle, and Method with Electric Motors and Dual Belt Drive**		

STATEMENT OF SPECIAL STATUS FOR ELIGIBILITY INTO THE GREEN TECHNOLOGY PILOT PROGRAM

Commissioner for Patents
P.O. Box 1450
Alexandria, VA 22313-1450

Dear Sir:

This paper is being filed with form PTO/SB/420 prior to the issuance of a first Office Action in the above-identified matter in order to qualify for special status and accelerated examination under the Green Technology Pilot Program. This paper includes remarks explaining why this patent application qualifies for the Green Technology Pilot Program. A fee for early publication is being filed herewith. No other fee is believed to be due in conjunction with this paper, but if any fee is required for this paper, or if the above fee is missing or insufficient, please consider this to be a petition therefore and deduct any necessary fees from (or deposit any overpayment to) Deposit Account 02-4467.

REMARKS begin on page 2 of this paper.

REMARKS

This patent application qualifies for the Green Technology Pilot Program because the subject matter of this patent application pertains to environmental quality, energy conservation, and greenhouse gas emission reduction. Patent applications in any one of these areas qualify for this program, but this patent application pertains to all three. Specifically, the present invention helps to make practicable, at least in certain applications, electric vehicles and hybrid electric vehicles. Electric vehicles and hybrid electric vehicles units are more energy efficient than typical prior vehicles because, among other things, braking energy can be recovered. As a result, less fuel (typically a fossil fuel) needs to be burned to move the vehicle a particular number of miles. Further, in the cases of electric vehicles, no fuel is burned at the vehicle, and if the electricity is generated without burning a fossil fuel, then no fuel is consumed to power the vehicle. Consequently, this invention contributes to more efficient utilization and conservation of gasoline and diesel fuel (as examples) and at least proportionally reduces the emissions into the atmosphere of pollutants traditionally associated with the combustion of such fuels such as carbon monoxide, hydrocarbons, particulates, and oxides of nitrogen. In addition, since less fossil fuel is burned, this invention proportionally contributes to the reduction of the emission of greenhouse gasses such as carbon dioxide, for example, with prior vehicle technology.

Filed herewith in further support of this petition, is a report titled: *Dual Motors Transaxle (DMT) Simulation and Analysis for Medium-Duty Truck Application.* As explained in this report, DMTs made in accordance with this invention are being developed for use in medium-duty trucks. In the past, medium-duty trucks and truck designs were not often converted to all electric or hybrid electric powertrains in part because practical designs and components were not readily available at relatively low cost. This invention plays a key roll in allowing medium-duty trucks and truck designs to be converted at reasonable cost to all electric or hybrid electric powertrains. Such conversion provides for reducing fuel bills for the vehicle owner, reducing greenhouse gas (e.g., carbon dioxide) production, reducing emissions of traditional pollutants such as carbon monoxide, hydrocarbons, particulates, and oxides of nitrogen, reducing

dependency on limited fossil fuel reserves, reducing dependency on foreign sources of fossil fuels, and reducing environmental damage and risk associated with extraction of fossil fuels, as examples.

Many medium-duty trucks are used every day in driving cycles that involve extensive starting and stopping. As a result, conversion of such vehicles to electric or hybrid electric drive has the potential to significantly reduce consumption of fossil fuels, thereby providing the various benefits described herein. Consequently, needs or potential for benefit exist for equipment, apparatuses, and methods that allow electric and hybrid electric drivetrains to be installed and used in such vehicles. In particular, needs or potential for benefit exist for equipment, apparatuses, and methods that provide for transmission of power from electric motors to vehicle wheels (and vice versa), and that are reliable, easy to maintain, and cost-effective. Furthermore, devices that make such equipment and systems possible are needed or would be beneficial that are sufficiently reliable, inexpensive, and easy to install and service so as to be practical, whether on a small scale or in a mass-production context. Other needs or potential for benefit or improvement may also be described in this patent application or known in the vehicle or fossil fuel industries. Room for improvement exists over the prior art in these and other areas that may be apparent to a person of ordinary skill in the art having studied this patent application.

Various claims of this patent application concern electric vehicle powertrains of particular configurations, highway vehicles with electric motors, and methods of manufacturing vehicles with electric motors. All such claims cover subject matter that helps to make practicable, at least in certain applications, electric vehicles and hybrid electric vehicles. Thereby, the claimed subject matter contributes to more efficient utilization and conservation of fossil fuels, to the reduction of the emissions of pollutants traditionally associated with the combustion of fossil fuels, and to the reduction of the emission of greenhouse gasses, for example, in comparison with typical prior vehicle technology. If any one of these benefits exist, all such claims qualify for the Green Technology Pilot Program.

The statements made herein and in the other documents filed for this patent application should not be construed as an admission or assertion that any claim of this patent application would have been obvious over any other claim or that any two claims are not patentably distinct or independent. Nor should the statements made or silence herein be construed as consent or acceptance of any statement made by any other party unless specifically stated as such herein.

Consideration and allowance of all pending claims is requested. Should the Examiner believe that a discussion would help to advance allowance of this patent application, the Examiner is invited to telephone the undersigned.

Dated: November 8, 2011.

Respectfully submitted,

By: Allan W. Watts

Allan W. Watts
U.S. Reg. No. 45,930
Bryan Cave LLP
One Renaissance Square
Two North Central Avenue,
Suite 2200
Phoenix, AZ 85004-4406
Allan.watts@bryancave.com
Direct: (602) 364-7331

Dual Motors Transaxle (DMT)

Simulation & Analysis for Medium-Duty Truck Application

American Challenge Technologies, Inc. has applied for a patent on a "Powertrain, Vehicle, and Method with Electric Motors and Dual Belt Drive." ACT refers to this product as the Dual Motor Transaxle (DMT). Part of an electric drive system, the DMT is a transaxle that transmits power from two independent electric motors to a vehicle's wheels. The DMT is compatible with a broad range of vehicles and can play a central role in reducing harmful emissions, improving fuel economy, and advancing energy independence.

This report provides a preliminary analysis on the medium-duty commercial vehicle sector and the application of the DMT for this market segment.

Presidential Memorandum

On May 21, 2010, President Obama signed a Presidential Memorandum directing the U.S. Environmental Protection Agency (EPA) and the U.S. Department of Transportation (DOT) to create a first-ever National Policy to increase fuel efficiency and decrease greenhouse gas pollution from medium- and heavy-duty trucks for Model Years 2014-2018. Currently trucks consume more than two million barrels of oil every day, and average 6.1 miles per gallon. They also emit 20% of greenhouse gas pollution related to transportation.

EPA & NHTSA Regulatory Announcement

In October 2010, the EPA and the DOT's National Highway Traffic Safety Administration (NHTSA) announced a first-ever program to reduce greenhouse gas (GHG) emissions and improve fuel efficiency of medium- and heavy-duty vehicles. These vehicles make up the transportation segment's second largest contributor to oil consumption and GHG emissions.

The agencies estimate that the combined proposed standards have the potential to reduce GHG emissions by nearly 250 million metric tons and save approximately 500 million barrels of oil over the life of vehicles sold during 2014 to 2018, while providing an estimated $35 billion in net benefits to truckers.

DOE National Clean Fleets Partnership

On April 4, 2011, the U.S. Department of Energy (DOE) formed the National Clean Fleets Partnership program. AT&T, FedEx, PepsiCo, UPS and Verizon are charter members of the National Clean Fleets Partnership, a new White House initiative to help large companies incorporate electric vehicles, alternative fuels and fuel-saving measures into their fleets. The five charter members are planning to deploy over 20,000 advanced technology vehicles, and will displace over 7 million gallons of petroleum a year, according to the DOE. These members operate five of the nation's ten largest fleets, and collectively own and operate more than 275,000 vehicles.

Vehicle Fuel Economy

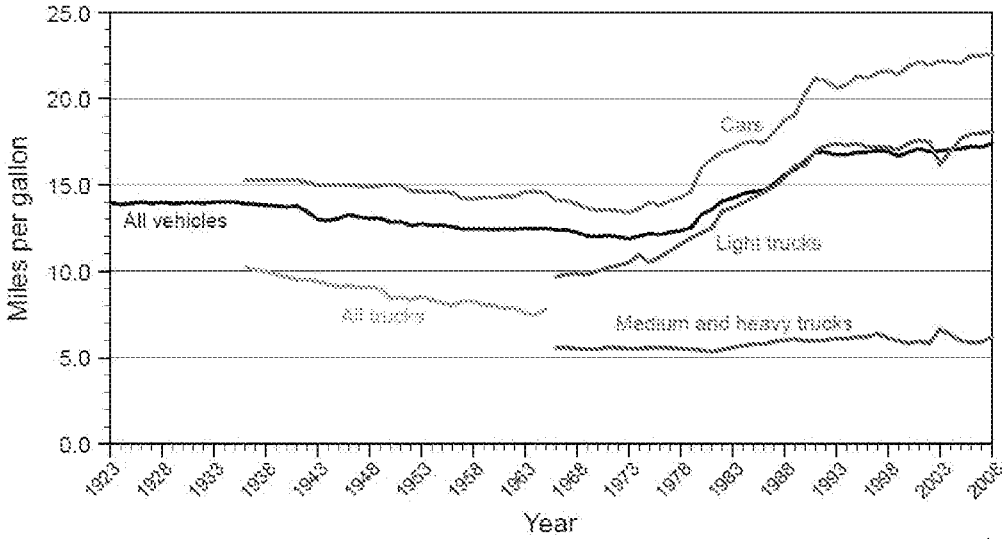

Figure 1. Mean on-road fuel economy of vehicles in the US, 1923-2008[1]

Compared to passenger cars and light-duty trucks, fuel economy for the medium-duty truck market has not changed much over the years. Electric vehicles are ideal for urban medium-duty truck applications because of the long duty cycles, demanding conditions and high levels of fuel consumption.

Energy Conservation

The DMT's electric motors are powered by on-board batteries that are charged by plugging into the electric power grid. The batteries will most likely be charged during the night in off-peak periods. In addition to plugging into the grid, the vehicle would utilize regenerative energy during braking. This can be done by using the same components that propel the vehicle.

In the stop-start environment of congested city centers, an internal combustion engine does not perform well. However, an electric vehicle is at its most energy efficient in this environment.

Greenhouse Gas Emission Reduction

The DMT is part of an electric vehicle system that operates without any conventional engine. With no on-board engine, pure electric vehicles are 100% zero emission at the point of use.

If charged with renewable energy you have a genuinely carbon-free transport solution. When charged with conventional grid electricity, electric vehicles still deliver a substantial CO2 saving over the equivalent internal combustion powered vehicles.

Medium-Duty Truck Market

Electric vehicles are especially suitable for fleet vehicles engaged in low mileage work on predictable daily routes such as depot-based fleets with multi drop/collections.

The DMT can be used as an electric drive solution for new or existing vehicles. The DMT is lightweight, compact and easy to integrate or package. The DMT is modular with no orientation constraints so it can be configured to meet a variety of medium-duty vehicle performance requirements. In the very near future thousands of Class 4, 5 and 6 commercial trucks will be retrofitted.

A number of commercial vehicle fleets are already utilizing electric powered vehicles. Currently UPS has 100 electric and 250 hybrid electric medium-duty delivery trucks.

Medium-Duty Truck & DMT Case Study

The DMT is an essential component required for an electric drive system that transmits power from two independent electric motors to a vehicle's wheels. The dual motor layout creates a drivetrain powerful enough to meet the requirements for commercial medium-duty utility vehicles with a typical urban delivery route.

ACT has conducted a case study for FedEx and UPS W700 step vans built on either Ford E450 or Freightliner MT45 chassis. A Class 5, 16,000 lbs delivery truck loaded to 19,500 lbs GVW was used for the simulations.

The analysis data shows the performance capability as well as a practical drive cycle. Two cases were explored; one for a 0% grade and the other for 6% grade proving the DMT system is capable of accelerating the delivery truck in both scenarios. Figure 2 and 3 show the amount of power available from the DMT system in each case.

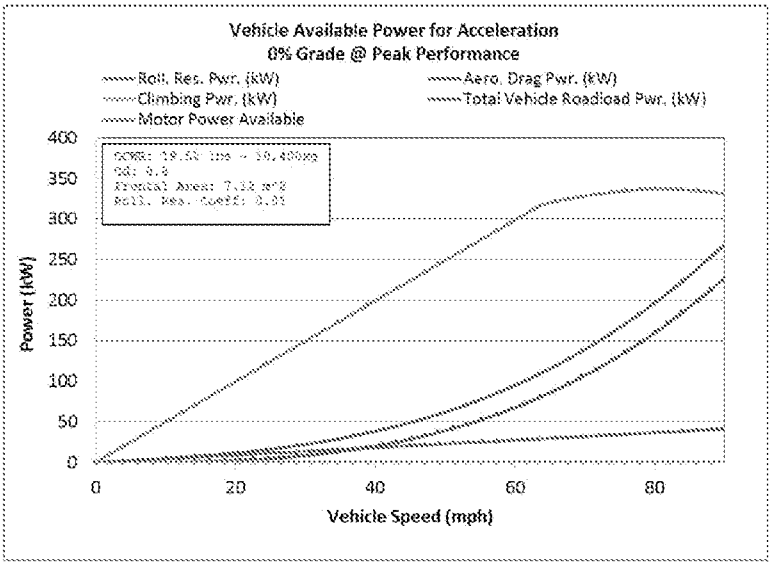

Figure 2. Available power for acceleration on a 0% grade

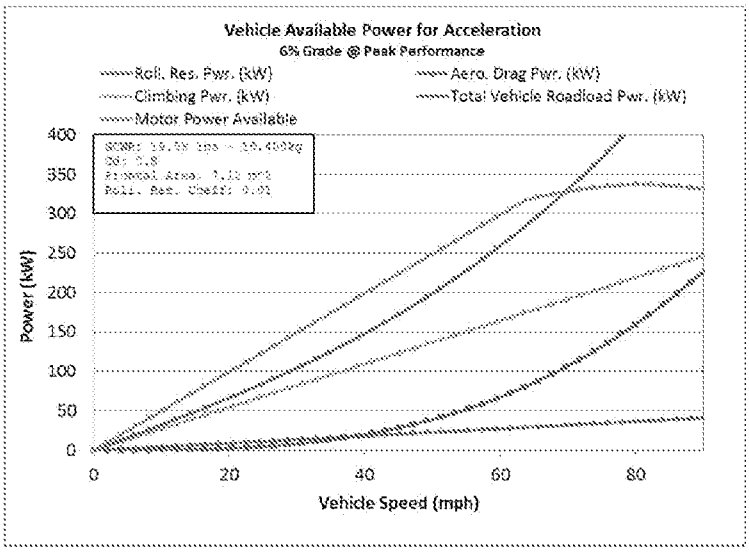

Figure 3. Available power for acceleration on a 6% grade

A study by the National Renewable Energy Laboratory[2] has shown that the current FedEx and UPS W700 step van accelerates on average around 2.2 m/s^2. ACT designed the DMT system to be capable of up to 3 m/s^2 during peak acceleration. The steepest grades on local roads can be up to 6%. The DMT system is capable of climbing these grades at reasonable speeds of up to 40 mph.

The FedEx and UPS W700 step van accelerates to 60 mph in about 30 seconds at peak performance. The DMT system can match this performance. Figure 4 shows the acceleration time for the various cases. Under normal driving conditions the DMT system is able to operate within the motor's continuous power curve.

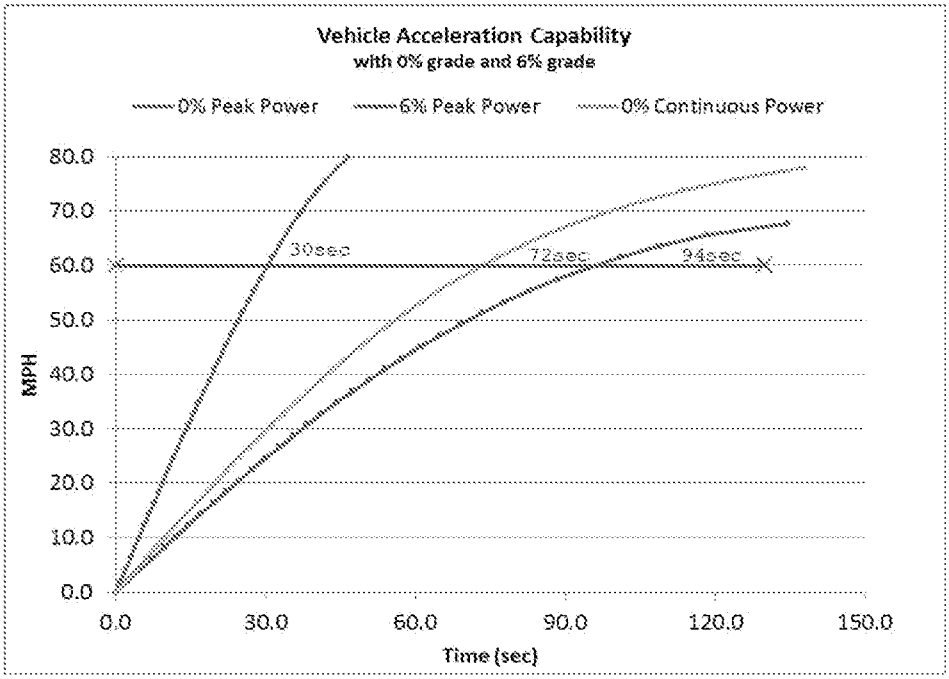

Figure 4. Vehicle acceleration times

A simplified drive cycle was used to approximate how the DMT system will perform on a typical delivery route.

3 cycles - 0-60 mph (45 sec), 60 mph (5 min), 60-0 (30 sec)
150 cycles - 0-30 mph (22.5 sec), 30 mph (10 min), 30-0 (20 sec)

The energy used and regenerated during this daily drive cycle is shown in figure 5.

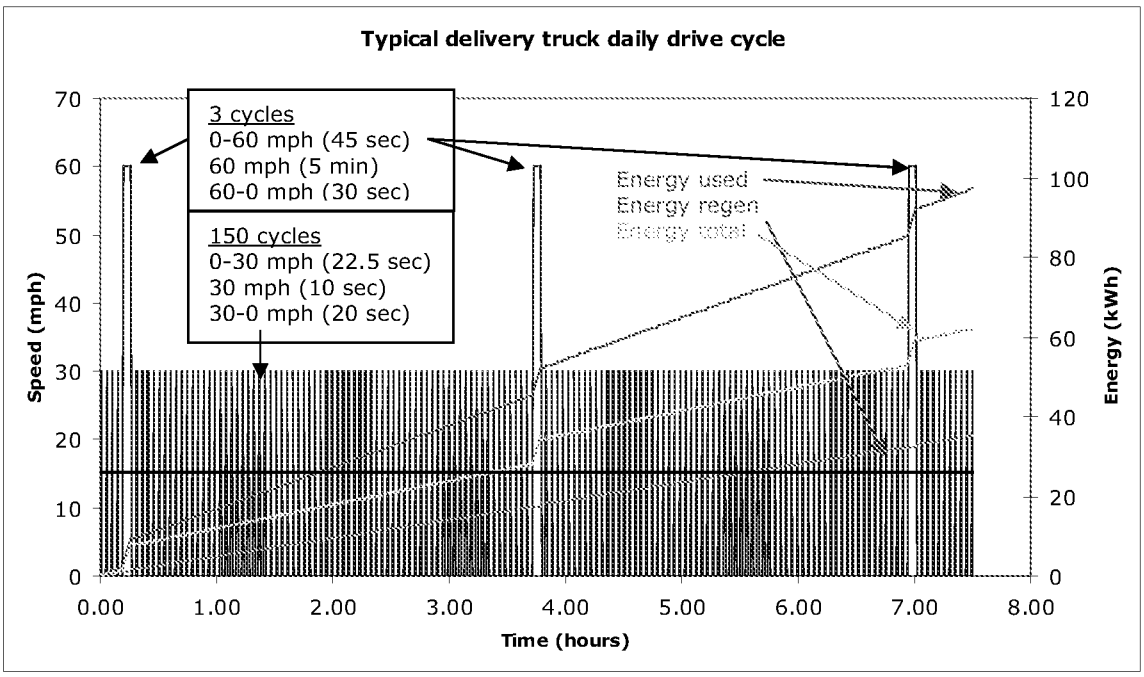

Figure 5. delivery truck drive cycle

The energy required to complete the daily cycle for the delivery truck is projected at a total amount of 98 kWh. Due to the start-stop nature of the drive cycle, the DMT system is able to recover 36 kWh through regenerative braking. This allows a reasonable battery capacity of 70 kWh.

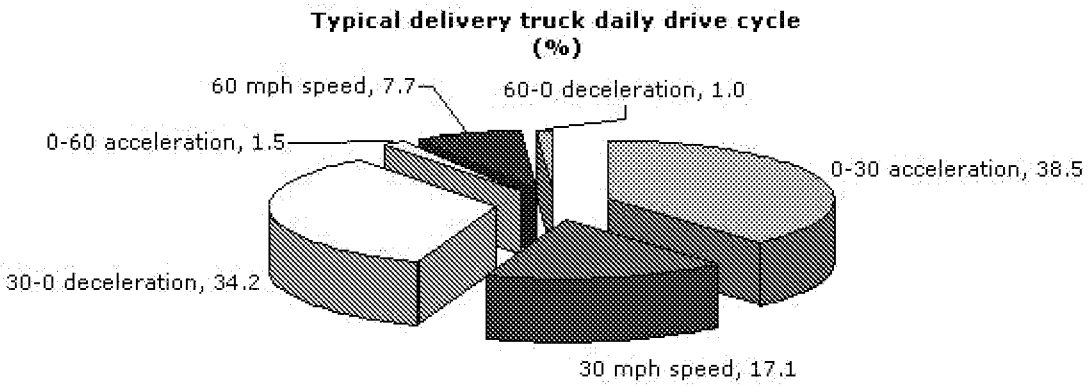

Figure 6. Breakdown of drive cycle

Conclusion

This analysis shows that the DMT system is a match to the performance of the existing internal combustion powertrain in the FedEx and UPS W700 step van.

The DMT is a key component that enables an efficient electric powertrain solution for the medium-duty truck market.

About American Challenge Technologies

American Challenge Technologies, Inc. (ACT) is an innovative design and engineering company developing new technology assets for the transportation industry. ACT is strategically targeting the commercial delivery vehicle market. ACT is focused on providing cost effective and environmentally friendly electric powertrain systems.

References

[1] The University of Michigan Transportation Research Institute (August 2011) Eco-Driving: Strategic, Tactical, and Operational Decisions of the Driver that Improve Vehicle Fuel Economy (Report No. UMTRI-2011-34)

[2] DOE National Renewable Energy Laboratory (January 2011) FedEx Express Gasoline Hybrid Electric Delivery Truck Evaluation: 12-Month Report (Report No. NREL/TP-5400-48896)

UNITED STATES PATENT AND TRADEMARK OFFICE

UNITED STATES DEPARTMENT OF COMMERCE
United States Patent and Trademark Office
Address: COMMISSIONER FOR PATENTS
P.O. Box 1450
Alexandria, Virginia 22313-1450
www.uspto.gov

APPLICATION NO.	FILING DATE	FIRST NAMED INVENTOR	ATTORNEY DOCKET NO.	CONFIRMATION NO.
13/028,954	02/16/2011	Joseph N. Scarbo	0317363	9748

46019 7590 11/17/2011
BRYAN CAVE LLP
TWO NORTH CENTRAL AVENUE, SUITE 2200
PHOENIX, AZ 85004

EXAMINER
MANSEN, MICHAEL R

ART UNIT	PAPER NUMBER
3654	

MAIL DATE	DELIVERY MODE
11/17/2011	PAPER

Please find below and/or attached an Office communication concerning this application or proceeding.

The time period for reply, if any, is set in the attached communication.

UNITED STATES PATENT AND TRADEMARK OFFICE

Commissioner for Patents
United States Patent and Trademark Office
P.O. Box 1450
Alexandria, VA 22313-1450
www.uspto.gov

BRYAN CAVE LLP
TWO NORTH CENTRAL AVENUE, SUITE 2200
PHOENIX AZ 85004

NOV 17 2011

In re Application of	:	
Scarbo et al.	:	DECISION ON PETITION
Application No. 13/028,954	:	TO MAKE SPECIAL UNDER
Filed: 2/16/2011	:	THE GREEN TECHNOLOGY
Attorney Docket No. **0317363**	:	PILOT PROGRAM

This is a decision on the petition under 37 CFR 1.102, filed 11/8/2011, to make the above-identified application special under the pilot program for applications pertaining to Green Technologies as set forth in 74 Federal Register Notice 64666 (December 8, 2009) and amended by 75 Federal Register Notice 28554 (May 21,. 2010) and 75 Federal Register Notice 69049 (November 10, 2010).

The petition is **GRANTED**.

A grantable petition to make an application special under 37 CFR 1.102 and the pilot program as set forth in 74 FR 64666 must be directed to a nonprovisional application filed under 35 USC 111(a) or be a national stage entry under 35 USC 371, exclusive of any reissue applications.

In order to qualify for special status, the following requirements must be met. 1) The application must have no more than 3 independent claims and no more than 20 total claims. 2) The application must not contain any multiple dependent claims. 3) The petition must state the basis for seeking special status, i.e., the claimed invention either: A) materially enhances the quality of the environment or B) materially contributes to: i) the discovery or development of renewable energy resources, ii) the more efficient utilization and conservation of energy resources, or iii) greenhouse gas emission reduction. 4) If the disclosure is not clear on its face that the claimed invention materially contributes under category (A) or (B), the petition must be accompanied by a statement by the applicant, assignee, or an attorney/agent registered to practice before the Office explaining how the materiality standard is met. 5) A statement that applicant will agree to make an election without traverse in a telephonic interview if a restriction requirement is made by the examiner. 6) The petition to make special must be filed electronically. 7) The petition must be filed at least one day prior to the date that a first Office Action appears in the Patent Application Information Retrieval (PAIR) system. 8) The petition must be accompanied by a request for early publication in compliance with 37 CFR 1.219 and include the publication fee as set forth in 37 CFR 1.18(d).

The requirement for a fee for consideration of the petition to make special for applications pertaining to Green Technologies has been waived.

The instant petition complies with items 1 – 8 above. Accordingly, the above-identified application has been accorded "special" status.

Telephone inquires concerning this decision should be directed to Tom Dunn at 571-272-1171.

The application is being forwarded to the Technology Center Art Unit 3654 for action on the merits commensurate with this decision.

/Tom Dunn/

Tom Dunn
Quality Assurance Specialist
Technology Center 1700