KKB/TMH:bmm
Attorney Ref. No. 8486-85359-06

FILED VIA EFS
Application No. 13/029,001

Doc Code: PPH.PCT.652
Document Description: Petition to make special under PCT-Patent Pros Hwy

PTO/SB/20PCT-AU (01-11)
Approved for use through 01/31/2012. OMB 0651-0058
U.S. Patent and Trademark Office; U. S. DEPARTMENT OF COMMERCE
Under the Paperwork Reduction Act of 1995, no persons are required to respond to a collection of information unless it displays a valid OMB control number.

REQUEST FOR PARTICIPATION IN THE PATENT COOPERATION TREATY - PATENT PROSECUTION HIGHWAY (PCT-PPH) PILOT PROGRAM BETWEEN THE IP AUSTRALIA (IPAU) AND THE USPTO

Application No:	13/029,001	Filing date:	February 16, 2011
First Named Inventor:	Rodney L. Benjamin		
Title of the Invention:	USE OF METHYLSULFONYLMETHANE (MSM) TO MODULATE MICROBIAL ACTIVITY		

THIS REQUEST FOR PARTICIPATION IN THE PCT-PPH PILOT PROGRAM ALONG WITH THE REQUIRED DOCUMENTS MUST BE SUBMITTED VIA EFS-WEB. INFORMATION REGARDING EFS-WEB IS AVAILABLE AT HTTP://WWW.USPTO.GOV/EBC/EFS_HELP.HTML

APPLICANT HEREBY REQUESTS PARTICIPATION IN THE PCT-PPH PROGRAM AND PETITIONS TO MAKE THE ABOVE-IDENTIFIED APPLICATION SPECIAL UNDER THE PCT-PPH PROGRAM.

The above-identified application is (1) a national stage entry of the corresponding PCT application, or (2) a national stage entry of another PCT application which claims priority to the corresponding PCT application, or (3) a national application that claims domestic/ foreign priority to the corresponding PCT application, or (4) a national application which forms the basis for the priority claim in the corresponding PCT application, or (5) a continuing application of a U.S. application that satisfies one of (1) to (4) above, or (6) a U.S. application that claims domestic benefit to a U.S. provisional application which forms the basis for the priority claim in the corresponding PCT application.

The corresponding PCT application number(s) is/are: PCT/US2010/054845

The international filing date of the corresponding PCT application(s) is/are: October 29, 2010

I. List of Required Documents:

a. **A copy of the latest international work product (WO/ISA, WO/IPEA, or IPER) in the above–identified corresponding PCT application(s)**

☑ Is attached.

☐ Is not attached because the document is already in the U.S. application.

b. **A copy of all claims which were indicated as having novelty, inventive step and industrial applicability in the above-identified corresponding PCT application(s).**

☐ Is attached.

☑ Is not attached because the document is already in the U.S. application.

c. **English translations of the documents in a. and b. above are attached (if the documents are not in the English language). A statement that the English translation is accurate is attached for the document in b. above.**

This collection of information is required by 35 U.S.C. 119, 37 CFR 1.55, and 37 CFR 1.102(d). The information is required to obtain or retain a benefit by the public, which is to file (and by the USPTO to process) an application. Confidentiality is governed by 35 U.S.C. 122 and 37 CFR 1.11 and 1.14. This collection is estimated to take 2 hours to complete, including gathering, preparing, and submitting the completed application form to the USPTO. Time will vary depending upon the individual case. Any comments on the amount of time you require to complete this form and/or suggestions for reducing this burden should be sent to the Chief Information Officer, U.S. Patent and Trademark Office, U.S. Department of Commerce, P.O. Box 1450, Alexandria, VA 22313-1450. DO NOT SEND FEES OR COMPLETED FORMS TO THIS ADDRESS.

PTO/SB/20PCT-AU (01-11)
Approved for use through 01/31/2012. OMB 0651-0058
U.S.Patent and Trademark Office; U.S. DEPARTMENT OF COMMERCE
Under the Paperwork Reduction Act of 1995, no persons are required to respond to a collection of information unless it displays a valid OMB control number.

REQUEST FOR PARTICIPATION IN THE PCT-PPH PILOT PROGRAM BETWEEN THE IPAU AND THE USPTO

(continued)

Application No.:	13/029,001
First Named Inventor:	Rodney L. Benjamin

d. **(1) An information disclosure statement listing the documents cited in the international work products (ISR, WO/ISA, WO/IPEA, IPER) of the corresponding PCT application.**

☐ Is attached

☑ Has already been filed in the above-identified U.S. application on February 17, 2011

(2) Copies of all documents (except) for U.S. patents or U.S. patent application publications)

☐ Are attached.

☑ Have already been filed in the above-identified U.S. application on February 17, 2011

II. Claims Correspondence Table:

Claims in US Application	Patentable Claims in the corresponding PCT Application	Explanation regarding the correspondence
1	3	
2	5	
3	6	
4	4	
5	5	
6	6	
7	7	
8	8	
9	15	
10	16	
11	17	
12	18	
13	18	
14	19	
15	20	
16	20	
17	21	
18	22	
19	23	

III. All the claims in the US application sufficiently correspond to the patentable claims in the corresponding PCT application.

Signature /Karri Kuenzli Bradley/	Date February 17, 2011
Name (Print/Typed) Karri Kuenzli Bradley	Registration Number 56,300

PTO/SB/20PCT-AU (01-11)
Approved for use through 01/31/2012. OMB 0651-0058
U.S.Patent and Trademark Office; U.S. DEPARTMENT OF COMMERCE
Under the Paperwork Reduction Act of 1995, no persons are required to respond to a collection of information unless it displays a valid OMB control number.

REQUEST FOR PARTICIPATION IN THE PCT-PPH PILOT PROGRAM BETWEEN THE IPAU AND THE USPTO

(continued)

Application No.:	13/029,001
First Named Inventor:	Rodney L. Benjamin

d. **(1) An information disclosure statement listing the documents cited in the international work products (ISR, WO/ISA, WO/IPEA, IPER) of the corresponding PCT application.**

☐ Is attached

☑ Has already been filed in the above-identified U.S. application on February 17, 2011

(2) Copies of all documents (except) for U.S. patents or U.S. patent application publications)

☐ Are attached.

☑ Have already been filed in the above-identified U.S. application on February 17, 2011

II. Claims Correspondence Table:

Claims in US Application	Patentable Claims in the corresponding PCT Application	Explanation regarding the correspondence
20	23	

III. All the claims in the US application sufficiently correspond to the patentable claims in the corresponding PCT application.

Signature /Karri Kuenzli Bradley/	Date February 17, 2011
Name (Print/Typed) Karri Kuenzli Bradley	Registration Number 56,300

UNITED STATES PATENT AND TRADEMARK OFFICE

UNITED STATES DEPARTMENT OF COMMERCE
United States Patent and Trademark Office
Address: COMMISSIONER FOR PATENTS
P.O. Box 1450
Alexandria, Virginia 22313-1450
www.uspto.gov

APPLICATION NO.	FILING DATE	FIRST NAMED INVENTOR	ATTORNEY DOCKET NO.	CONFIRMATION NO.
13/029,001	02/16/2011	Rodney L. Benjamin	8486-85359-06	9827

24197 7590 05/24/2011
KLARQUIST SPARKMAN, LLP
121 SW SALMON STREET
SUITE 1600
PORTLAND, OR 97204

EXAMINER

ART UNIT	PAPER NUMBER
1648	

NOTIFICATION DATE	DELIVERY MODE
05/24/2011	ELECTRONIC

Please find below and/or attached an Office communication concerning this application or proceeding.

The time period for reply, if any, is set in the attached communication.

Notice of the Office communication was sent electronically on above-indicated "Notification Date" to the following e-mail address(es):

tanya.harding@klarquist.com
docketing@klarquist.com

UNITED STATES PATENT AND TRADEMARK OFFICE

Commissioner for Patents
United States Patent and Trademark Office
P.O. Box 1450
Alexandria, VA 22313-1450
www.uspto.gov

MAY 2 4 2011

KLARQUIST SPARKMAN, LLP
121 SW SALMON STREET
SUITE 1600
PORTLAND, OR 97204

In re Application of	:	DECISION ON REQUEST TO
BENJAMIN, ET AL.	:	PARTICIPATE IN PATENT
Application No. 13/029,001	:	PROSECUTION HIGHWAY
Filed: February 16, 2011	:	PROGRAM AND PETITION
Attorney Docket No. 8486-85359-06	:	TO MAKE SPECIAL UNDER
	:	37 CFR 1.102(a)

This is a decision on the request to participate in the Patent Cooperation Treaty - Patent Prosecution Highway (PCT-PPH) program and the petition under 37 CFR 1.102(a), filed February 17, 2011, to make the above-identified application special.

The request and petition are **DISMISSED**.

A grantable request to participate in the PCT-PPH program and petition to make special require:

(1) The U.S. application is (1) a national stage entry of the corresponding PCT application, or (2) a national stage entry of another PCT application which claims priority to the corresponding PCT application, or (3) a national application that claims domestic/foreign priority to the corresponding PCT application, or (4) a national application which forms the basis for the priority claim in the corresponding PCT application, or (5) a continuing application of a U.S. application that satisfies one of (1) to (4) above, or (6) a U.S. application that claims domestic benefit to a U.S. provisional application which forms the basis for the priority claim in the corresponding PCT application;
(2) The latest work product in the international phase of the PCT application corresponding to the U.S. application, namely the WO/ISA, or the WO/IPEA, or the IPER, indicates at least one claim in the PCT application has novelty, inventive step and industrial applicability;
(3) All the claims in the U.S. application must sufficiently correspond or be amended to sufficiently correspond to one or more of those claims indicated as having novelty, inventive step and industrial applicability and free of any observation described in Box VIII in the latest work product of the corresponding PCT application;
(4) Examination of the U.S. application has not begun;
(5) Applicant must submit a copy of latest international work product, WO/ISA, or WO/IPEA or IPER, which indicated that the claim(s) has/have novelty, inventive step and industrial applicability along with an English translation thereof if the copy of the latest international work product is not in the English language;

(6) Applicant must submit the claims from the corresponding PCT application which were indicated as having novelty, inventive step and industrial applicability in the latest work product of the PCT application along with an English translation thereof and a statement that the English translation is accurate if the claims are not in the English language;
(7) Applicant must submit a claim correspondence table in English; and
(8) Applicant must submit an IDS listing the documents cited in the international work products (ISR, WO/ISA, WO/IPEA, IPER) of the PCT application along with copies of documents except U.S. patents or U.S. patent application publications.

The request to participate in the PCT-PPH program and petition fails to comply with the requirement because:

(2) An observation is described in Box VIII of the WO/ISA, WO/IPEA, or IPER which forms the basis for the PCT-PPH request. However, applicant has not identified or explained why the claim(s) is/are not subject to any observation described in Box VIII. The U.S. application will not be eligible to participate in the PCT-PPH pilot program if applicant does not identify and explain why the claim(s) is/are not subject to the observation described in Box VIII.

(6) Applicant has not submitted the claims from the corresponding PCT application.

(7) The claims correspondence table does not indicate how all the claims in the U.S. application sufficiently correspond to the claims indicated as having novelty, inventive step and industrial applicability in the latest international work product.

Applicant is given a time period of **ONE MONTH or THIRTY DAYS**, whichever is longer, to correct the deficiencies. **NO EXTENSION OF TIME UNDER 37 CFR 1.136 IS PERMITTED.** If the deficiencies are not corrected with the time period given, the application will await action in its regular turn.

Response must be submitted via EFS-Web with the document description: Petition to make special under Patent Pros Hwy. Information regarding EFS-Web is available at http://www.uspto.gov/ebc/efs_help.html.

Telephone inquiries concerning this decision should be directed to Cecilia Tsang at 571-272-0562.

All other inquiries concerning the examination or status of the application should be directed to Patent Application Information Retrieval (PAIR) system.

Cecilia Tsang
Supervisory Patent Examiner

IN THE UNITED STATES PATENT AND TRADEMARK OFFICE

In re application of: Benjamin *et al.*
Application No. 13/029,001
Filed: February 16, 2011
Confirmation No. 9827
For: USE OF METHYLSULFONYLMETHANE (MSM) TO MODULATE MICROBIAL ACTIVITY
Examiner:
Art Unit: 1632
Attorney Reference No. 8486-85359-06

FILED VIA EFS

FILED VIA EFS
COMMISSIONER FOR PATENTS

RESPONSE TO DECISION ON REQUEST TO PARTICIPATE IN PATENT COOPERATION TREATY-PATENT PROSECUTION HIGHWAY PROGRAM AND PETITION TO MAKE SPECIAL UNDER 37 C.F.R. 1.102(a)

This request is submitted in response to the Decision refusing the Request to participate in the Patent Cooperation Treaty-Patent Prosecution Highway (PCT-PPH) Program and Petition to make special under 37 C.F.R. § 1.102(a) dated May 24, 2011. A one-month period of response was set, making a response timely if filed on or before **June 24, 2011**. Applicants do not believe any fees are due at this time. Please charge any fees that may be required in connection with filing this Request and Petition to Deposit Account No. 02-4550.

Applicants hereby petition the Commissioner to accept the filing of the Request to participate in the PCT-PPH program and Petition to make special under 37 C.F.R. § 1.102(a) submitted to the United States Patent and Trademark Office on February 17, 2011.

The requirements (paragraphs 1-8) for a grantable request to participate in the PCT-PPH program and petition to make special under 37 C.F.R. § 1.102(a) are listed in the Decision.

Applicants' Request and Petition under 37 C.F.R. § 1.102(a) submitted on February 17, 2011 is alleged to fail to comply with Paragraphs (2), (6) and (7). Each of these Paragraphs is responded to in detail below. Applicants believe that, in light of the additional statements and

documents submitted herewith, the Request and Petition have been prepared in accordance with the requests of the Office. As such, reconsideration and granting of the Request and Petition is requested.

Paragraph (2)[1]

The Decision notes that an Observation is described in Box VIII of the WO/ISA, and that Applicants need to identify or explain why the U.S. claim(s) is not subject to this Observation. The Observation states that PCT claim 16 (corresponding to U.S. claim 10) does not meet the requirements of Article 6 of the PCT as allegedly it is unclear with regard to whether the medium must be contaminated with H1N1 before "H1N1 influenza microbial activity" can be inhibited by MSM. The Australian Search Authority did examine the claim as being interpreted as not requiring that the medium be contaminated with H1N1 and that contacting said medium with MSM can result in the inhibition of H1N1 microbial activity such as by preventing contamination of an uncontaminated medium, and/or preventing the further replication of H1N1 already contaminating that medium. With this interpretation, the Australian Search Authority found PCT claim 16 to be novel, inventive and satisfy industrial applicability. Applicants assert that this interpretation is correct and clearly supported by the specification, including at least page 13, lines 3-5; page 25, lines 1-7; page 45, line 32 – page 46, line 2; page 62, lines 7-24; page 64, lines 27-30; and page 65, lines 1-12. In particular, the phrase "inhibiting microbial activity" is defined as including "reducing the growth, reproduction, proliferation, survival rate, metabolism, vitality, robustness, action, and/or function of microorganisms (see, page 13, lines 3-5). Further, as stated on page 64, lines 27-30, the disclosed methods of inhibiting microbial activity are used to prevent or minimize the formation of new microbes as well as used to kill or reduce existing microbes. Medium and surfaces susceptible to microbial contamination are also clearly disclosed in the specification, including at least page 62, lines 1-24. As such, Applicants believe that PCT claim 16 (corresponding to U.S. application claim 10) is definite and satisfies Article 6 of the PCT. Therefore, Applicants believe that this observation does not apply to U.S.

[1] Applicants believe that the reference to Paragraph (2) as being deficient may be in error, because the text of the detailed rejection discusses the Observation that was made in the latest work product. Paragraph (3) indicates that the claims in the U.S. application must be free of any Observations, rather than Paragraph (2). For completeness, Applicants note that the WO/ISA (required by Paragraph (2)) was submitted with the Request and Petition on February 17, 2011.

independent claim 10 and all claims depending therefrom. Thus, Applicants believe that the Observation is fully addressed and requirements of Paragraph (3) are satisfied.

Paragraph (6)

The Decision indicates that the Request and Petition under 37 C.F.R. § 1.102(a) were dismissed for allegedly not providing the claims from the corresponding PCT application. Submitted herewith is Exhibit I which includes the claims from the corresponding PCT application (PCT/US2010/054845) as filed on October 29, 2010 and as published on May 5, 2011, as PCT Publication No. WO 2011/053854. Applicants believe that this submission now satisfies the requirements of Paragraph (6).

Paragraph (7)

The Decision also indicates that the Claims Correspondence Chart does not indicate how all the claims in the U.S. application sufficiently correspond to the claims indicated as having novelty, inventive step and industrial applicability in the latest international work product. Submitted herewith as Exhibit II is a Claim Correspondence Chart showing the relationship between the U.S. application and the claims of the corresponding PCT application. The text of the PCT claims as filed and examined by the Australian International Search Authority is shown in the column labeled Corresponding PCT Application Claims. The U.S. claims are in the column labeled U.S. Application Claims, and clearly reflect the amendments made to the PCT claims in order to obtain the final text of the U.S. claims.

The Australian International Search Authority found claims 3-8 and 15-23 of the PCT application to meet the PCT standards of novelty, inventive steps and industrial applicability. The claims in the U.S. application correspond to PCT claims 3-8 and 15-23 as indicated in Exhibit II. In effect, the allowable PCT claims were rewritten to incorporate the limitations of the claims from which they depended, corrected for claim numbering and dependency in light of the consequent cancelation of claims 1, 2 and 9-14, and multiple dependencies were removed. Applicants believe that submission of Exhibit II and the above explanation satisfies the requirements of Paragraph (7).

Conclusion

In light of the clarification regarding Paragraph (2), (3), (6) and (7) and Exhibits I and II, Applicants believe that the requirements of 37 C.F.R. § 1.102(a) have been satisfied. Applicants believe that all of the requirements to participate in the PCT-PPH program have been met and respectfully request this (renewed) Petition pursuant to 37 C.F.R. § 1.102(a) be granted. Applicants request that if any additional issues remain regarding this petition that Examiner Cecilia Tsang please contact their undersigned representative.

One World Trade Center, Suite 1600
121 S.W. Salmon Street
Portland, Oregon 97204
Telephone: (503) 595-5300
Facsimile: (503) 595-5301

Respectfully submitted,

KLARQUIST SPARKMAN, LLP

By /Karri Kuenzli Bradley/
Karri Kuenzli Bradley, Ph.D.
Registration No. 56,300

cc: Docketing

UNITED STATES PATENT AND TRADEMARK OFFICE

UNITED STATES DEPARTMENT OF COMMERCE
United States Patent and Trademark Office
Address: COMMISSIONER FOR PATENTS
P.O. Box 1450
Alexandria, Virginia 22313-1450
www.uspto.gov

APPLICATION NO.	FILING DATE	FIRST NAMED INVENTOR	ATTORNEY DOCKET NO.	CONFIRMATION NO.
13/029,001	02/16/2011	Rodney L. Benjamin	8486-85359-06	9827

24197 7590 10/04/2011
KLARQUIST SPARKMAN, LLP
121 SW SALMON STREET
SUITE 1600
PORTLAND, OR 97204

EXAMINER

ART UNIT	PAPER NUMBER
1648	

NOTIFICATION DATE	DELIVERY MODE
10/04/2011	ELECTRONIC

Please find below and/or attached an Office communication concerning this application or proceeding.

The time period for reply, if any, is set in the attached communication.

Notice of the Office communication was sent electronically on above-indicated "Notification Date" to the following e-mail address(es):

tanya.harding@klarquist.com
docketing@klarquist.com

UNITED STATES PATENT AND TRADEMARK OFFICE

Commissioner for Patents
United States Patent and Trademark Office
P.O. Box 1450
Alexandria, VA 22313-1450
www.uspto.gov

OCT 0 4 2011

KLARQUIST SPARKMAN, LLP
121 SW SALMON STREET
SUITE 1600
PORTLAND, OR 97204

In re Application of	:	DECISION ON REQUEST TO
BENJAMIN, ET AL.	:	PARTICIPATE IN PATENT
Application No. 13/029,001	:	PROSECUTION HIGHWAY
Filed: February 16, 2011	:	PROGRAM AND PETITION
Attorney Docket No. 8486-85359-06	:	TO MAKE SPECIAL UNDER
	:	37 CFR 1.102(a)

This is a decision on the request for reconsideration to participate in the Patent Cooperation Treaty - Patent Prosecution Highway (PCT-PPH) program and the petition under 37 CFR 1.102(a), filed June 24, 2011, to make the above-identified application special.

The request and petition are **GRANTED**.

A grantable request to participate in the PCT-PPH program and petition to make special require:

(1) The U.S. application is (1) a national stage entry of the corresponding PCT application, or (2) a national stage entry of another PCT application which claims priority to the corresponding PCT application, or (3) a national application that claims domestic/foreign priority to the corresponding PCT application, or (4) a national application which forms the basis for the priority claim in the corresponding PCT application, or (5) a continuing application of a U.S. application that satisfies one of (1) to (4) above, or (6) a U.S. application that claims domestic benefit to a U.S. provisional application which forms the basis for the priority claim in the corresponding PCT application;
(2) The latest work product in the international phase of the PCT application corresponding to the U.S. application, namely the WO/ISA, or the WO/IPEA, or the IPER, indicates at least one claim in the PCT application has novelty, inventive step and industrial applicability;
(3) All the claims in the U.S. application must sufficiently correspond or be amended to sufficiently correspond to one or more of those claims indicated as having novelty, inventive step and industrial applicability and free of any observation described in Box VIII in the latest work product of the corresponding PCT application;
(4) Examination of the U.S. application has not begun;
(5) Applicant must submit a copy of latest international work product, WO/ISA, or WO/IPEA or IPER, which indicated that the claim(s) has/have novelty, inventive step and industrial applicability along with an English translation thereof if the copy of the latest international work product is not in the English language;

(6) Applicant must submit the claims from the corresponding PCT application which were indicated as having novelty, inventive step and industrial applicability in the latest work product of the PCT application along with an English translation thereof and a statement that the English translation is accurate if the claims are not in the English language;
(7) Applicant must submit a claim correspondence table in English; and
(8) Applicant must submit an IDS listing the documents cited in the international work products (ISR, WO/ISA, WO/IPEA, IPER) of the PCT application along with copies of documents except U.S. patents or U.S. patent application publications.

The request to participate in the PCT-PPH program and petition met all the requirements and accordingly the petition is Granted.

Response must be submitted via EFS-Web with the document description: Petition to make special under Patent Pros Hwy. Information regarding EFS-Web is available at http://www.uspto.gov/ebc/efs_help.html.

Telephone inquiries concerning this decision should be directed to Cecilia Tsang at 571-272-0562.

All other inquiries concerning the examination or status of the application should be directed to Patent Application Information Retrieval (PAIR) system.

/Cecilia Tsang/
Cecilia J. Tsang
Supervisory Patent Examiner
TC 1600

PTO/SB/420 (05-10)
Approved for use through 01/31/2011. OMB 0651-0062
U.S. Patent and Trademark Office; U. S. DEPARTMENT OF COMMERCE
Under the Paperwork Reduction Act of 1995, no persons are required to respond to a collection of information unless it displays a valid OMB control number.

PETITION TO MAKE SPECIAL UNDER THE GREEN TECHNOLOGY PILOT PROGRAM

Attorney Docket Number: 39358-701.202	Application Number (if known): 13/029,032	Filing date: February 16, 2011
First Named Inventor: Eric Bretschneider		
Title: LIGHTING UNIT WITH HEAT-DISSIPATING CHIMNEY		

APPLICANT HEREBY REQUESTS TO PARTICIPATE IN THE GREEN TECHNOLOGY PILOT PROGRAM FOR THE ABOVE-IDENTIFIED APPLICATION. See Instruction Sheet on page 2.

This petition must be timely filed electronically using the USPTO electronic filing system, EFS-Web.

1. By filing this petition:

   Applicant is requesting early publication: Applicant hereby requests early publication under 37 CFR 1.219 and the publication fee set forth in 37 CFR 1.18(d) accompanies this request.

2. By filing this petition: applicant is agreeing to make an election without traverse in a telephonic interview and elect an invention that meets the eligibility requirements set forth in the notice titled "Pilot Program for Green Technologies Including Greenhouse Gas Reduction," as modified by the notice titled "Elimination of Classification Requirement in the Green Technology Pilot Program," each of which was published in the Federal Register, if the Office determines that the claims are not obviously directed to a single invention.

3. This request is accompanied by statements of special status for the eligibility requirement.

4. The application contains no more than three (3) independent claims and twenty (20) total claims.

5. The application does not contain any multiple dependent claims.

6. Other attachments: STATEMENT ACCOMPANYING PETITION TO MAKE SPECIAL UNDER THE GREEN TECHNOLOGY PILOT PROGRAM

Signature	Date: March 29, 2011
Name (Print/Typed) Elaine A. Kim	Registration Number: 57,613

Note: *Signatures of all the inventors or assignees of record of the entire interest or their representative(s) are required in accordance with 37 CFR 1.33 and 11.18. Please see 37 CFR 1.4(d) for the form of the signature. If necessary, submit multiple forms for more than one signature, see below*.*

☒ *Total of 1 forms are submitted.

The information is required to obtain or retain a benefit by the public which is to file (and by the USPTO to process) an application. Confidentiality is governed by 35 U.S.C. 122 and 37 CFR 1.11 and 1.14. This collection is estimated to take 12 hours to complete, including gathering, preparing, and submitting the completed application form to the USPTO. Time will vary depending upon the individual case. Any comments on the amount of time you require to complete this form and/or suggestions for reducing this burden, should be sent to the Chief Information Officer, U.S. Patent and Trademark Office, U.S. Department of Commerce, P.O. Box 1450, Alexandria, VA 22313-1450. DO NOT SEND FEES OR COMPLETED FORMS TO THIS ADDRESS. **SEND TO: Commissioner for Patents, P.O. Box 1450, Alexandria, VA 22313-1450.**

If you need assistance in completing the form, call 1-800-PTO-9199 and select option 2.

PATENT
Attorney Docket No. 39358-701.202

IN THE UNITED STATES PATENT AND TRADEMARK OFFICE

In re Application:		Confirmation No.:	**9881**
Inventor:	Eric Bretschneider	Examiner:	Not Yet Assigned
Application No.:	13/029,032	Group Art Unit:	2875
Filed:	February 16, 2011	Customer No.	**21971**
Title:	**LIGHTING UNIT WITH HEAT-DISSIPATING CHIMNEY**		

FILED ELECTRONICALLY ON: MARCH 29, 2011

STATEMENT ACCOMPANYING PETITION TO MAKE SPECIAL UNDER THE GREEN TECHNOLOGY PILOT PROGRAM

Commissioner for Patents
P.O. Box 1450
Alexandria, VA 22313-1450

Dear Sir:

Applicant herewith submits the following statement accompanying a Petition to Make Special under the Green Technology Pilot Program.

Applicant's invention is directed to a lighting unit which comprises: "a heat dissipating support structure, having at least one space between portions of the support structure; a plurality of light emitting elements in thermal communication with the support structure and disposed along a length of said support structure; and at least one passageway located between at least two light emitting elements and through the heat dissipating support structure to the space." The light emitting elements can provide illumination of the lighting unit, while the heat dissipating support structure can dissipate heat from the light emitting elements. The heat dissipating support structure reduces the likelihood that the light emitting elements will overheat and improves the efficiency of the light emitting elements, and the overall lighting unit. The heat dissipating configuration of the lighting unit as claimed enables the lighting unit to stay cool, which makes the

light emitting elements (e.g., LEDs) more efficient and longer-lasting, and lowers the failure rate of the light emitting elements.

Applicant's invention materially enhances the quality of the environment by improving the efficiency of the light emitting elements and the overall lighting unit. Thus, the lighting unit can provide a desired amount of illumination while using less energy. Conventional lighting units, such as conventional 1" diameter T8 fluorescent tubes, have an efficacy for the bare lamp of about 70-100 lumens/watt. Data collected from the claimed lighting unit demonstrated that the lighting unit operates with an efficiency of 115.5 lumens/Watt. See, e.g., pages 64-66 of specification. By increasing the luminous efficacy of lighting units that may replace the conventional lighting units described, less energy is consumed to produce the same amount of light.

The invention claimed herein materially contributes to the development of energy conservation. Since the claimed lighting units operate with greater efficacy than traditional lighting units, less energy is consumed in the operation of the lighting unit to provide a desired illumination.

Furthermore, the invention claimed herein materially contributes to greenhouse gas reduction. Fewer watts are required to generate a given amount of light, thereby reducing the greenhouse gases used to produce energy for the lighting unit in order to provide a desired illumination. Using a more efficient source of light leads to: an overall increase in energy efficiency, savings of electricity, reduced need for power plants, and reduction of carbon emissions.

For example, the lighting unit can use LEDs and function as a fluorescent tube replacement (FTR). The U.S. Department of Energy estimates that directionality of LED light sources in the lighting unit can provide an additional 17% (on average) increase in efficiency when installed in a typical recessed troffer fixture. See, e.g., "LED Performance Specification Series: T8 Replacement Lamps," U.S. Department of Energy, Energy Efficiency & Renewable Energy, page 2, Table 3. When coupled with the lighting unit efficiency of 115.5 lumens per watt, an approximately 30% increase in efficiency might be obtained over a 100 lumens per watt T8

fluorescent tube that is being replaced (and significantly more than even lower efficiency T12 fluorescent tube). Furthermore, the FTR product enabled by the claimed invention does not contain mercury, which is a highly toxic substance that exists in fluorescent tubes. As a result, fluorescent tubes are considered a hazardous waste under the Resource Conservation and Recovery Act and must be disposed of appropriately (see the U.S. Environmental Protection Agency website http://www.epa.gov/osw/hazard/wastetypes/universal/merc-emi.htm). The lighting unit provided with the invention can provide an efficient and clean alternative to one of the most common sources of artificial illumination--the linear fluorescent tube. [Viability of LED lighting units as FTRs have been recognized. See, e.g., Neal, Houston, "Are LED Fluorescent Tubes Ready for Prime Time?" Greentech Media, May 7, 2010, http://www.greentechmedia.com/articles/read/are-led-fluorescent-tubes-ready-for-prime-time]. LED lighting is forecasted by CANACCORD Genuity to have a 46% market penetration by 2020, saving 5 trillion kilowatts of electricity, removing the need for 559 full-sized power plants, and reducing a cumulative 8.4 billion tons of carbon emissions. (See "The Third Cycle: Quantifying the lighting market and its impact on LEDs," by Jed Dorsheimer, Managing Director, Equity Research, Lighting and Solar, CANACCORD Genuity, Notes to Presentation, Strategies in Light Solid-State Lighting Investor Forum, February 22, 2011, page 14.) With the claimed invention, these savings can begin being realized now. Energy Star, a joint program of the U.S. Environmental Protection Agency and the U.S. Department of Energy, estimates that lighting consumes close to 35% of the electricity used in commercial buildings in the United States, and uses about 18% of the electricity generated in the United States (http://www.energystar.gov/index.cfm?c=business.EPA_BUM_CH6_Lighting). Thus, the energy saved by the increased efficiency lighting units claimed will have a direct and significant impact on energy savings and carbon emissions.

In this manner, Applicant's invention materially contributes to the quality of the environment, and materially contributes to the more efficient utilization and conservation of energy resources and green house gas emission reduction.

CONCLUSION

Applicant respectfully requests the Examiner accept this Petition to Make Special under the Green Technology Pilot Program and advance the application to issuance.

The Commissioner is authorized to charge any additional fees which may be required, including petition fees and extension of time fees, to Deposit Account No. 23-2415 (Docket No. 39358-701.202).

Respectfully submitted,

Date: March 29, 2011

By: _____
Elaine A. Kim
Registration No. 57,613

WILSON SONSINI GOODRICH & ROSATI
650 Page Mill Road
Palo Alto, CA 94304-1050
Direct Dial: (650) 493-9300
Customer No. 21971

more material and prohibitive cost. Furthermore, the amount of phosphor required for a given amount of light conversion is further minimized by placing the phosphor on a reflector, where the light can experience multiple passes through the luminescent layer.

[00209] In addition to cost and efficiency advantages, the present work can provide improved light output, light distribution, color quality, and color consistency. In the twin side emitter fluorescent tube replacement design, for example, the use of primarily reflective optics makes it much easier to control the light distribution, particularly with the use of two reflective surfaces. For color control, homogenization of the cool white output from the LEDs can be accomplished by the controlled use of LEDs with different specific color points. The combined output of these LEDs can be tuned to meet a consistent color point. The specific amount of red and/or orange phosphor materials can also be controlled to adjust the light output. The multiple reflections can also evenly distribute the colors with respect to output angle. Because phosphor materials of the red and/or orange wavelengths are typically most sensitive to heat, locating the phosphor remotely allows for slower degradation and improved lifetime and efficiency of the red and/or orange phosphor which will allow the color set point to be maintained for longer.

[00210] Furthermore, lighting units of the present work can be configured as standalone luminaires or may be configured to fit readily into existing luminaires such as linear fluorescent luminaires where existing fluorescent ballasts can be easily replaced with an external power supply matched to the LED system.

EXAMPLES

[00211] A lighting unit having one or more of the features described, such as a heat transfer chimney, was tested at multiple National Institute of Standards and Technology (NIST) traceable labs. The lighting unit had a heat dissipating support structure formed of aluminum, LEDs (e.g., NSSW208A surface mounted LEDs from Nichia Corp. of Tokushima, Japan) mounted on a PCB

circuit board, a first optical element, and two second optical elements (e.g., which may have a reflective surface material such as WO-F33 high diffuse reflectance film from WhiteOptics LLC of Newark DE). In one of the tests, a lighting unit had a luminescent material disposed on a second optical element (e.g., Intematix 05446 Eu doped silicate phosphor from Intematix Corp. of Fremont, CA). In another test, the lighting unit did not have the luminescent material.

[00212] Some measurements were taken in an integrating sphere. An LED drive current of 20 mA per LED was provided. The ambient temperature was 25 degrees C. The lighting unit that had the luminescent material coated on the second optical element yielded a luminous efficacy of 115.5 lumens/Watt. The lighting unit without the luminescent material on yielded a luminous efficacy of 106.6 lumens/Watt.

[00213] Conventional lighting units, such as conventional 1" diameter, or T8 fluorescent tube lamps have an efficacy for the bare lamp of about 70-100 lumens/watt. When two T8 fluorescent tube lamps are operated in conventional parabolic troffers, a typical overall luminaire efficacy of approximately 60 lumens/watt is obtained and light output is around 3700 lumens. High efficiency troffers can provide luminaire efficacies typically of approximately 75 lumens/watt and light output of approximately 4000 lumens. Currently available LED-based T8 fluorescent tube replacement products, with bare lamp efficiencies ranging between 70-90 lumens/watt, can have similar luminaire luminous efficacies of approximately 60 – 80 lumens/watt for two replacement lamps in a parabolic troffer, with a typical light output of 2200 to 3200 lumens. Problems with currently available LED-based fluorescent tube replacement lamps include the low light output, poor light distribution, and high cost that is not adequately offset by improvements in efficacy.

[00214] The efficacy of 115.5 lumens/watt and 106.6 lumens/watt for lighting units using the luminescent material and not using the luminescent material, respectively, above show that such

prototype lighting units can well surpass the state of the art. The tested lighting units above were four inch prototypes, or 1/12 of the length of a linear fluorescent tube with a light output of 151 lumens and 163 lumens, respectively. A rough estimate of the light output for two full length replacement lighting units can be obtained by multiplying the light output for the four inch sample by 12 to obtain the light output for a single lamp, and doubling the light output to account for two lamps in a troffer, which yield 3624 lumens or 3912 lumens light output for the tested lighting units, respectively. Thus, a lighting unit as described herein advantageously provides a lighting unit with greater luminous efficacy than both existing fluorescent tubes and currently available LED-based T8 replacement products. By requiring less energy, an energy conserving device is provided. Furthermore, the potential for high light output enables these lighting units to be better suited for use as fluorescent tube replacement lamps than currently available replacement products.

[00215] It should be understood from the foregoing that, while particular implementations have been illustrated and described, various modifications can be made thereto and are contemplated herein. It is also not intended that the invention be limited by the specific examples provided within the specification. While the invention has been described with reference to the aforementioned specification, the descriptions and illustrations of the preferable embodiments herein are not meant to be construed in a limiting sense. Furthermore, it shall be understood that all aspects of the invention are not limited to the specific depictions, configurations or relative proportions set forth herein which depend upon a variety of conditions and variables. Various modifications in form and detail of the embodiments of the invention will be apparent to a person skilled in the art. It is therefore contemplated that the invention shall also cover any such modifications, variations and equivalents.

LED Performance Specification Series:

LED T8 Replacement Lamps

LED T8 replacement lamps are proliferating in the lighting marketplace. How do these products compare to fluorescent T8 systems in terms of light output, distribution, color quality, and energy efficiency? What level of LED product performance should buyers specify for replacement applications?

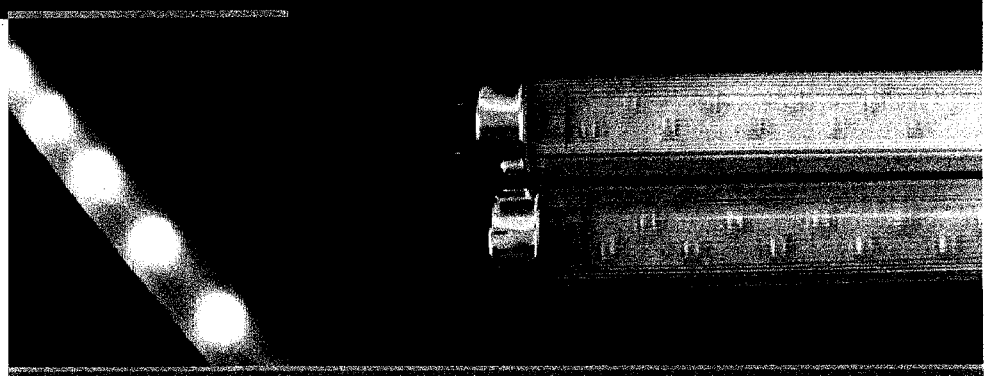

LED T8 replacements may contain dozens of high power LEDs or hundreds of 5mm LEDs behind a clear or frosted lens, all in a medium bi-pin T8 lamp package.

Recessed "troffer" fixtures with four-foot fluorescent T8 lamps are commonly specified in commercial and institutional lighting applications, and represent a significant installed base of fluorescent fixtures. Are LED replacement lamps a "drop-in" equivalent to T8 fluorescent lamp-ballast systems, as claimed by many manufacturers? DOE's CALiPER program has tested 12 different LED T8 replacement lamps to date, and finds that their performance falls short of fluorescent benchmarks.[1] Major findings (bare lamp and in a fixture) are summarized and compared with fluorescent benchmarks in Table 1.

Average initial bare lamp light output of the LED T8 replacements tested was about one-third the average for fluorescent T8s. On initial two-lamp system efficacy, two-lamp fixture output, luminaire efficacy, and CRI, the LED T8 replacement performance was significantly below that of the fluorescent T8s. Average fixture efficiency was higher with LED T8s because LEDs are directional, so less light is lost inside the fixture. This was not enough to compensate for the much lower light output however.

Table 1. CALiPER Test Results for 4-foot LED T8 Replacements with Fluorescent Benchmarks

	LED T8 Replacements		Fluorescent Benchmarks	
Performance Characteristics	Range (12 lamps tested)	Average	Mfr. Data (75 lamps)	CALiPER (2 fixtures tested)
Initial Lamp Light Output (lm)	345 – 1,579	1,111	2,778	3,091
Initial 2-Lamp System Efficacy (lm/W)	19 – 76	50	87	---
Initial 2-Lamp Fixture Light Output (lm)	597 – 2,038	1,563	3,577	4,064
Initial CRI	63 – 76	71	75 – 80	82
Fixture Efficiency (%)	74 – 86	83	74	66
Initial Luminaire Efficacy (lm/W)	17 – 57	41	64	57

Defining Minimum Performance

What performance level is reasonable to demand of LED T8 replacements? DOE's recommended specifications are summarized in Table 3 (over). Initial light output is based on matching fluorescent T8 lumens, and accounting for fluorescent ballast factor, lumen depreciation, and the better fixture efficiency measured with LED T8s compared to fluorescent. Note that luminous efficacy for the LED T8 is not specified. This is because LED T8 wattage varies. Table 2 below shows the efficacy levels the most common LED T8 wattages would have to achieve to meet the specified initial light output. Median efficacy for LED T8s tested by CALiPER to date is 44 lumens per watt. The highest efficacy measured to date is approximately 70 lm/W. At that efficacy, an LED T8 producing equivalent light output to fluorescent would draw 38 watts, increasing total energy use. To provide equivalent light output to fluorescent T8s and also save energy, LED T8s will need to become two to three times more efficacious than they are today.

Table 2. Implied LED T8 Lamp Efficacy to Provide Light Output Equivalent to Fluorescent

LED T8 wattage	Implied efficacy for 2,700 initial lumens (lm/W)
20	135
19	142
18	150
17	159
16	169
15	180

continued >

1 See CALiPER Round 5 and Round 9 summary reports for additional details: www.ssl.energy.gov.

Table 3. Suggested Specifications for Four-Foot LED Linear Replacement Lamps

Performance Attribute	Specification	Notes
Initial minimum lamp light output *LED useful life is based on 70% lumen maintenance. Fluorescent T8 lamps have much higher lumen maintenance, about 94%. The initial lumen specification for LED T8 aims to ensure equivalent output to fluorescent T8.* *Measured fixture efficiency with LED T8s averaged 17% higher than with fluorescent, due to LED directionality.*	**2,700 lumens**	Based on equivalency to fluorescent T8 (average of 75 T8 lamps) with the following: – Average initial fluorescent T8 lumens = 2,778 – Normal ballast factor = 0.87 – Depreciation of fluorescent lamp lumens at time of relamping (70% of rated life) = 0.94 – Fixture efficiency factor, fluorescent compared to LED = 0.17 – Fluorescent depreciated lumens = 1,886 – Divide by 0.7 to get LED initial lumens = 2,694, round to 2700
Minimum lamp life, L70 *Unlike for conventional light sources, there is no standard life rating method for LED T8 lamps. The products are too new to have long-term operating data available.*	**35,000 hours** Ask for 6000 hours of integral lamp operating data (not just LED data). Lumen maintenance at 6000 hours should be at least 94.1% of initial value.	Fluorescent T8 rated life averages 24,000 hours on 3-hour starts and 30,000 hours on 12-hour starts, both on instant start ballasts. Longer life of 40,000 hours or more is possible with programmed start ballasts.
Luminous intensity distribution	Varies, but users are strongly encouraged to evaluate intensity distributions in comparison to those from fluorescent systems. If possible ask for an intensity distribution plot for the LED T8 lamps in the intended fixture type (e.g., parabolic, lensed, etc).	
Correlated color temperature (CCT) (Kelvin)	Nominal CCTs and tolerances as defined in ANSI_NEMA_ ANSLG C78.377-2008, "Specifications for the Chromaticity of Solid State Lighting Products." Nominal CCT / Tolerance 2700 K / 2725 ± 145 3000 K / 3045 ± 175 3500 K / 3465 ± 245 4000 K / 3985 ± 275 4500 K / 4503 ± 243 5000 K / 5028 ± 283 5700 K / 5665 ± 355 6500 K / 6530 ± 510	Chromaticity tolerances defined in ANSI C78.377 correspond to approximately 7-step Macadam ellipses for fluorescent chromaticity. In addition to the six nominal CCTs defined for fluorescent sources, the standard defines 4500K and 5700K for SSL products.
Minimum CRI	**80**	Equivalent to 800 series fluorescent lamps.
Warranty	**3 years**	
Electrical Safety	ANSI/UL 8750	

What information should you request from the LED T8 replacement lamp manufacturer?

- LM-79 photometric test report from a CALiPER-qualified or NVLAP-accredited laboratory (see DOE SSL website www.ssl.energy.gov for more information).
- Lumen maintenance testing on the full lamp. At least 6,000 hours is recommended.

A Strong Energy Portfolio for a Strong America

Energy efficiency and clean, renewable energy will mean a stronger economy, a cleaner environment, and greater energy independence for America. Working with a wide array of state, community, industry, and university partners, the U.S. Department of Energy's Office of Energy Efficiency and Renewable Energy invests in a diverse portfolio of energy technologies.

For more information contact:

EERE Information Center
1-877-EERE-INF
(1-877-337-3463)
www.eere.energy.gov

For Program Information on the Web:

www.ssl.energy.gov
DOE sponsors a comprehensive program of SSL research, development, and commercialization.

For Program Information:

Kelly Gordon
Pacific Northwest National Laboratory
Phone: (503) 417-7558
E-mail: kelly.gordon@pnl.gov

PNNL-19316-1
April 2010

U.S. DEPARTMENT OF
ENERGY

Energy Efficiency & Renewable Energy

Wastes - Hazardous Waste - Universal Wastes

Hazardous Waste Management System; Modification of the Hazardous Waste Program; Hazardous Waste Lamps; Final Rule - July 6, 1999

Final Rule - July 6, 1999 | NODA - July 11, 1997 | Report, Modeling Software, and Users Guide - June 30, 1997 | Associated Documents

Final Rule

Today's final rule adds hazardous waste lamps to the federal list of universal wastes regulated under the Resource Conservation and Recovery Act (RCRA). Handlers of universal wastes are subject to less stringent standards for storing, transporting, and collecting these wastes. The Agency has concluded that regulating spent hazardous waste lamps as a universal waste under 40 CFR Part 273 will lead to better management of these lamps and will facilitate compliance with hazardous waste requirements. Today's final rule, which streamlines the Subtitle C management requirements for hazardous waste lamps, also supports energy conservation efforts.

Federal Register Notice (PDF) (26 pp, 176K) || Federal Register Notice

Environmental Fact Sheet: Some Used Lamps Are Universal Wastes (PDF) (2 pp, 13K) || Text

You will need Adobe Reader to view some of the files on this page. See EPA's PDF page to learn more.

Index to Docket #F-1999-FLEF-FFFFF

Response to Comments Document (1994 Proposal)

Final Economic Assessment, Final Document, Post-OMB Review (PDF) - March 11, 1999 (146 pp, 585K)

Regulatory Flexibility Screening Analysis, Final Document, Post-OMB Review (PDF) - March 4, 1999 (11 pp, 36K)

Peer Review of the EPA Analytical Model: Mercury Emissions from the Disposal of Fluorescent Lamps, Comment Response Document (PDF) - March 1998 (29 pp, 91K)

Notice of Data Availability for the Study on Mercury Emissions from the Disposal of Fluorescent Lamps, Comment Response Document (PDF) - May 1998 (78 pp, 334K)

Mercury Emissions From The Disposal of Fluorescent Lamps Revised Model, Final Report - Post OMB Review (PDF) - March 31, 1998 (60 pp, 363K)

A User's Guide to the Mercury Emissions Model, Revised Model - Post OMB Review (PDF) - March 31, 1998 (36 pp, 456K)

The Electronic Mercury Emissions Model Software (6.8MB) - self-extracting zipped file
User needs
- Microsoft Windows 3.1 or higher
- 16 MB of RAM
- 50 MB of disk space

Top of Page

Mercury Emissions from the Disposal of Fluorescent Lamps Notice of Data Availability (NODA) - July 11, 1997

Federal Register Notice

EPA made available to the public a study containing information relating to its Proposed Rule addressing the management of mercury-containing lamps under the Resource Conservation and Recovery Act Subtitle C hazardous waste management system published in the Federal Register on July 27, 1994, 59 FR 39288. The study consists of an electronic model and report that provides an assessment of mercury emissions from the management of mercury-containing lamps under different approaches, including two that were discussed in the Proposed Rule: A conditional exclusion from hazardous waste regulations and adding lamps to Universal Waste regulations (May 11, 1995, 60 FR 25542). Readers should note that only comments about the study discussed in this Notice of Data Availability will be considered by the Agency during this comment period. The Agency is not reopening the comment period for the July 27, 1994 proposed rule through this Notice of Data Availability.

Top of Page

Report, Modeling Software, and Users Guide June 30, 1997

Quick Link to NODA, PDF files and Modeling Software...

The disposal of mercury-containing fluorescent lamps and the status of these lamps under the Resource Conservation and Recovery Act (RCRA) is controversial. Most fluorescent lamps contain quantities of mercury sufficient to fail the Toxicity Characteristic (TC) and are, therefore, hazardous wastes under RCRA. However, many generators do not recognize that lamps can be hazardous waste, and do not manage lamps as hazardous waste. In addition, not all lamps are subject to hazardous waste regulations (i.e., household lamps and lamps generated by conditionally exempt small quantity generators).

In the 1994 proposal, the Agency identified uncertainties regarding the amount of mercury released from spent fluorescent lamps in the waste management system. The Agency requested information on, among other things, the amount of mercury released from broken mercury-containing lamps and the air transport of mercury from lamps. The Agency has also requested comment on best management practices and controls that might best prevent releases of mercury to the environment under both options. Since the proposal, EPA has continued to compile and analyze information provided by industry and other interested parties on mercury emissions from spent fluorescent lamps.

Three items are contained in this document:

1. The electronic Mercury Emissions Model (LampHg),
2. A User's Guide To The Mercury Emissions Model - Final Report, June, 30, 1997, and
3. Mercury Emissions From The Disposal of Fluorescent Lamps - Final Report, June 30, 1997.

Each of the above items are designed to support the Notice of Data Availability (NODA): Hazardous Waste Management System; Modification of the Hazardous Waste Program; Mercury Containing Lamps. This NODA was published in the Federal Register on July 11, 1997.

The Mercury Emissions Model is an electronic analytical tool designed to estimate mercury emissions from the disposal of fluorescent lamps, under alternative disposal scenarios. This electronic model requires no special software but the user must have a PC compatible machine (486 or better) with at least 25 megabytes of free hard drive space, and a color monitor.

The document, A User's Guide To The Mercury Emissions Model - Final Report, June, 30, 1997, presents instructions on how to use the basic features of the model. It is intended for those who wish to use the model an are unfamiliar with relational databases. The Guide covers installing (from the CD-ROM) and running the model, running data diagnostics, selecting scenarios, report menu, graph menu, edit data menu, and calculating emissions from selected scenarios.

The document, Mercury Emissions From The Disposal of Fluorescent Lamps - Final Report, June 30, 1997, presents the methodology, data, and assumptions applied in the development of the Mercury Emissions Model. The objective of the Report is to ensure users understand Model functions and outputs. The Report describes inputs into the model for estimating mercury emissions during waste management and disposal activities. It also discusses inputs for estimating the energy savings from

using high-efficiency T8 lamps, and effects on mercury emissions from electric utilities. The Report presents estimates for lamp mercury emissions under the baseline and options, including annual and cumulative mercury lamp disposal emissions, and net emissions. In addition, the Report discusses sensitivity runs conducted to evaluate the extent to which selected input assumptions affect disposal emissions. The Report also discusses key model limitations.

Installing the Software - Quick Start - From Windows 3.1 or Windows 95

1. Download the file and place it in an empty sub-directory (you must have 20 megabytes of free disk space)
2. From DOS or the Windows File Manager/Explorer - execute the file (double click) "lamphg1e.exe" and the 53 files will be extracted
3. Execute the file "Setup.exe" (double click) from the File Manager/Explorer and follow the directions on the screen.
4. When the process is complete an ICON will be installed on your desktop. Read the users guide for more information on using the program

Top of Page

Associated Documents

Notice of Data Availability (NODA): Hazardous Waste Management System; Modification of the Hazardous Waste Program; Mercury Containing Lamps - July 11, 1997
The Electronic Mercury Emissions Model (LampHg) Software (6.8MB) - self-extracting zipped file
A User's Guide To The Mercury Emissions Model (PDF)- June, 30, 1997 (36 pp, 497K)
Mercury Emissions From The Disposal of Fluorescent Lamps - Final Report (PDF) - June, 30, 1997 (50 pp, 463K)

Top of Page

Wastes Home
Hazardous Waste Home
Waste Types Home
Universal Wastes Home
Where You Live
Laws & Regulations
Resources
Bulb/Lamp Recycling
Resource Conservation Challenge
Information Resources
Laws & Regulations
Educational Materials
Partnerships

PERSPECTIVES | ENERGY EFFICIENCY
HOUSTON NEAL: MAY 7, 2010

Are LED Fluorescent Tubes Ready for Prime Time?

Light emitting diode (LED) fluorescent tubes begin to catch on with consumers—but do the long-term savings outpace the upfront investment?

Light emitting diode (LED) fluorescent tubes are all the rage in the lighting market these days. The technology promises to be more energy efficient, less environmentally harmful and more economical than traditional fluorescent tube lighting. Still, there is a lot of debate over whether they are ready for widespread commercial use.

We recently came across an instance in which this very debate was being discussed in a LinkedIn electrical construction **group**. It was a heated thread with two electrical contractors hashing out the pros and cons of using LED fluorescent tubes. To continue our series of articles on "green" construction, we thought we'd tackle the issue ourselves. So here we present our findings on LED fluorescent tubes.

What is a LED Fluorescent Tube? Actually, "LED fluorescent tube" is a misnomer. LED lights and fluorescent lights are completely different technologies. LEDs are very small bulbs illuminated by movement of electrons in a diode. Fluorescent bulbs use electrodes and a gas combination of argon and mercury to produce light. As such, the name "LED fluorescent tube" really refers to an LED tube that reminds us of traditional fluorescent tubes (such as the one that is likely overhead as you read this).

LED lights should also not be confused with compact fluorescent light (CFL) bulbs. CFLs use the same technology as fluorescent tubes to produce light, but on a smaller scale. They are a replacement for the incandescent bulbs commonly found in most home light fixtures. CFLs have garnered a lot of press because of their energy efficiency and environmental benefits (i.e., they are considered to be greener than traditional lights because they use less power).

An LED tube is made up of hundreds of individual LEDs. They come in a variety of sizes (2, 4 or 6 feet), different temperatures (i.e., different colors of light), and varying arrays of LEDs. They can be purchased with new fixtures, or used for retrofitting existing fixtures. However, they don't require the ballasts that traditional fluorescents need, so those will need to be removed when replacing fluorescent bulbs with LED tubes.

When comparing LEDs to fluorescent tubes, here are four key specifications that should be reviewed:

Lumens – This is the unit of measurement for strength of light. Look for tubes with 1500 lumens or more.
Watts – This is a unit of measurement for power consumption. Four -foot LED tubes typically use 15 to 25 watts, while fluorescent tubes of this size use more than 30 watts.
Lifespan – This is how long the bulb will last. It's measured in hours. 50,000 hours is common for LED tubes.
Color temperature – The temperature of the light is the color of the light. It is measured in units of absolute temperature, or Kelvin (K).

3000K is considered warm (redder), 4100K is considered neutral, and 5800 K is cool (bluer).

Pros and Cons of LED and Fluorescent Tubes. To give recognition where it's due, fluorescent tubes are a great invention. They have been lighting most of America ever since GE brought them to market back in 1938. They are four to six times more energy efficient than incandescent bulbs and are said to last 10 to 20 times longer. Of course, they come with their own set of disadvantages, as well.

Fluorescent tubes contain mercury and phosphor, which present a number of health and environmental risks. The lights require a ballast, which adds to the cost of the lamp and can cause a buzzing noise. Finally, they frequently flicker, and the light is often drab.

On the other hand, LED bulbs last longer than fluorescents, and they don't contain harmful ingredients like mercury. Perhaps most signficantly, LEDs use much less power than fluorescent lamps -- and there are many other benefits, as well.

Still, LEDs aren't perfect. The tubes are generally not as bright and can cost more up front. And unfortunately, cost will likely be the number-one driver of greater adoption. So let's compare the costs of each type of bulb:

	LED TUBES	FLUORESCENT TUBES
Lifespan	Tubes last twice as long as the average fluorescent tube	Last 10 to 20 times longer than incandescent bulbs, but not as long as LED bulbs.
Cost	Very expensive. Tubes can range from $50 to $100.	Inexpensive. Tubes cost $2 to $10.
Heat output	These bulbs do not cause heat build-up.	Temperature can be up to 2 degrees warmer under fluorescent tubes.
Efficiency	More efficient than both fluorescent and incandescent tubes.	Four to six times more efficient than incandescent bulbs, but less efficient than LED tubes. They also require a ballast to power.
Comfort	More ergonomic than fluorescent tubes.	Not ergonomic: light is drab and all bulbs flicker (though not always visible to the human eye).
Material	Does not contain hazardous metals like mercury.	Does contain mercury and phosphor.
Other	Light is not as strong as fluorescent or incandescent bulbs.	Bulb life is reduced in situations where light is switched on and off frequently.

Costs of LED Tubes vs Fluorescent Tubes. The debate over LED vs fluorescent tubes always teeters when it comes to the cost argument. When comparing the upfront cost of one LED tube to one fluorescent tube, fluorescent wins, hands-down. However, when you consider volume discounts and the longer lifespan of LEDs, the scale leans the opposite direction. Let's compare the costs of each taking these factors into consideration.

This table compares the first-year cost of a single commercial-grade (i.e., UL and CE compliant), four-foot T8 LED tube to a four-foot T8 fluorescent tube. To measure kilowatts per year, we assumed the lights would be on for 12 hours a day, 255 days a year. We used an average energy rating of 20 watts per hour for LEDs and 32 for fluorescents. To calculate energy cost, we used an average cost per kilowatt of $0.11.

	4' LED T8 TUBE	4' T8 FLUORESCENT TUBE
Average cost of one tube	$70.00	$6.00
Kilowatts (KW) per year	61.20	97.92
Energy cost per year	$6.73	$10.77
Total Cost	$76.73	$16.77

Clearly, fluorescents are less expensive in the first year. However, when you account for product longevity, LED tubes are the winner. LED tubes last an average of 50,000 hours (roughly 16 years) while fluorescent T8 tubes last an average of 25,000 (roughly 8 years). To determine this, we looked at every fluorescent T8 tube that Sylvania offers (nearly 150) and calculated average lifespan. To be precise, it was 24,787.67 hours.

In this next table, we compare the 16-year cost (the lifespan of an LED tube) of 40 LED tubes compared to 40 fluorescent tubes. In this example, the number 40 is somewhat arbitrary. We have 20 2' x 4' fixtures in our office, so we chose 40 bulbs as our basis of comparison. Keep in mind, fluorescent fixtures require ballasts, so we'll need to tack on an additional $400 to fluorescent tubes (20 ballasts at $20).

Using prices from our previous table, in the first year it will cost $3,069 for the energy and initial purchase of 40 LED tubes. The fluorescent tubes would cost $1,071. Every year thereafter, the energy costs of LED tubes will be $269, and $431 for the fluorescents. In the eighth year, the fluorescent bulbs will need to be replaced at a cost of $240.

You'll notice the numbers in our table look a little different. That's because we've included an annual energy inflation rate of 5%. We also used a 2.5% inflation rate to calculate the cost of the replacement fluorescent bulbs in the eighth year. Finally, we used a 6% discount rate to determine the net present value (NPV).

	4' LED T8 TUBE	4' T8 FLUORESCENT TUBE
Year 1	$3,069	$1,071
Year 2	$283	$452
Year 3	$297	$475
Year 4	$312	$499
Year 5	$327	$524
Year 6	$344	$550
Year 7	$361	$577
Year 8	$379	$891
Year 9	$398	$637
Year 10	$418	$668
Year 11	$439	$702
Year 12	$461	$737
Year 13	$484	$774
Year 14	$508	$812
Year 15	$533	$853
Year 16	$560	$896
Net Present Value (NPV)	$6,432	$6,846

As our analysis reveals, the 16-year cost for 40 LED tubes is $6,431, while the cost for fluorescent tubes is $6,846. This is 6% in savings over the life of the tubes. Keep in mind, this is only 40 tubes. Building owners with more light fixtures will realize more savings, as the volume discount will be greater and energy costs will be lower. So, over the lifespan of the product, LED tubes are more cost effective than fluorescent tubes.

A Bright Future for LED Tubes. The cost of manufacturing LEDs is dropping. Researchers at Purdue University have developed a way to create LEDs using inexpensive, metal-coated silicon wafers instead of expensive sapphire-based bulbs. This discovery has the potential to bring the cost down to levels competitive with fluorescent tubes. You can stay up to date on news of this development over at the Eartheasy blog.

In the meantime, there's no reason electrical contractors shouldn't promote LED tubes. LED tubes can help building owners achieve eligibility for government and utility company incentives. They help companies capture the desirable -- and highly marketable -- green cachet. They provide greater energy cost savings than fluorescents. And finally, they are simply better for the Earth. They are the future of commercial lighting.

This article originally published on **Software Advice** at: **Are LED Fluorescent Tubes Ready for Prime Time?**

Strategies in Light®

The Leading Events for the Global LED and Lighting Industry

Canaccord Genuity

The LED industry experienced tremendous growth during the past decade largely due to rapid adoption in the mobile handset market. Many of the same early dynamics witnessed in the First Cycle are materializing in the LED industry once again today driven by LCD backlighting, which we have called the Second Cycle. As this cycle is beginning to peak, investors are now looking towards the LED industry's "holy grail:" lighting. While the market is still nascent, we predict LEDs will make significant inroads into the massive lighting market over the next decade. This presentation will explore the total size of this opportunity and the profound implications it will have on the entire LED and traditional lighting supply chains, as well as the unexpected consequences of yield improvements and efficiency gains, drawing from lessons learned through years of following other maturing technology sectors

.

PRESENTER:

Jed Dorsheimer, Managing Director, Equity Research, Lighting and Solar

Jonathan (Jed) Dorsheimer *serves as Principal, Sr. Equity Analyst at Canaccord Adams. By leveraging his knowledge of compound semiconductors and device physics, Jed has differentiated his research from the Street by identifying emerging trends such as Solid State Lighting. Through bottoms up analysis and tireless market diligence, Jed has built a franchise known for fundamental research and credited with identifying key companies within that show the greatest promise of maintaining or disrupting incumbent technologies.*

Conclusions

- First ever bottoms up analysis of the LED adoption/disruption of SSL
- LED lighting will reach 46% (30 to 60%) penetration by 2020
  - Revenues of between $105.9B and $313.8B
  - Save a cumulative 5T kWh of electricity
  - Removing the need for 559 full-sized power plants
  - Reduce a cumulative 8.4B tons of CO2 emissions = all of the passenger cars in the world.
  - Creates 1.3M jobs and saves over $489B over the next decade
- Between 6,300 and 4,700 additional MOCVD tools over 10yrs
- Investment Strategy
  - Sapphire market to grow 10x to over $2B by 2020
  - Long the Bottlenecks
  - Trade the companies with high exposure to bottlenecks
  - Use Pullbacks to strategically position mid term stories
  - Begin to look at downstream companies benefitting from upstream commoditization

6. Lighting

Revised November 2006

6.1	**Overview**	**3**
6.2	**The Importance of Lighting**	**4**
	Lighting and Your Building	4
	Lighting and People	6
6.3	**A Whole-System Approach**	**7**
6.4	**Lighting Design**	**9**
	The Right Quantity of Light	9
	The Right Quality of Light	10
	Outdoor Lighting	11
6.5	**Use Efficient Light Sources**	**12**
	Make Use of Daylight	13
	Linear Fluorescent Lamps	15
	Compact Fluorescent Lamps	18
	High-Intensity Discharge Lamps	18
	Other Light Sources	20
6.6	**Use Efficient Luminaires**	**22**
	Direct Lighting	22
	Indirect Lighting	23
6.7	**Automatically Control Lighting**	**24**
	On-Off Controls	24
	Dimming Controls	27
	Commissioning Ensures the Benefits of Lighting Controls	30
6.8	**Build In an Operations and Maintenance Plan**	**31**
	Plan for Group Relamping	32
	Retrocommission Lighting Controls	34
	Develop an O&M Manual	34
	Dispose of Lamps Properly	35

6.9 Summary 36

Bibliography 36

Glossary G-1

6.1 Overview

A lighting upgrade is the second stage in the building upgrade process. The staged approach accounts for the interactions among all the energy flows in a building (**Figure 6.1**) and produces a systematic method for planning upgrades that maximize energy savings. When the staged approach is performed sequentially, each stage includes changes that will affect the upgrades performed in subsequent stages, thus setting the overall process up for the greatest energy and cost savings possible. In the staged approach to building upgrades, lighting upgrades come early in the process because the lighting system has a significant impact on other building systems, affecting heating and cooling loads and power quality.

Lighting consumes close to 35 percent of the electricity used in commercial buildings in the United States and affects other building systems through its electrical requirements and the waste heat that it produces. Upgrading lighting systems with efficient light sources, fixtures, and controls can reduce lighting energy use, improve the visual environment, and affect the sizing of HVAC and electrical systems.

Any goals for a lighting upgrade should be consistent with overall company goals and energy policies. They should also include provisions for commissioning—to make sure that the installed systems work as intended—and retrocommissioning, to make sure that the installed systems continue to provide the intended benefits throughout their useful life (see U.S. Environmental Protection Agency [EPA], "Guidelines for Energy Management Overview," www.energystar.gov/index.cfm?c=guidelines.guidelines_index). It is also important to remember that, as the EPA's guidelines point out, the upgrade is not an end point but a step along a path of continuous improvement. To ensure that a lighting upgrade leads to an effective and efficient system, follow these key guidelines:

- Design the system to get the appropriate amount of light for the tasks to be performed in the space in question.

Figure 6.1: The staged approach to building upgrades

The staged approach to building upgrades accounts for the interactions among all the energy flows in a building. Each stage includes changes that will affect the upgrades performed in subsequent stages, thus setting the overall process up for the greatest energy and cost savings possible. Lighting upgrades come early in the process, because the lighting system affects heating and cooling loads and power quality.

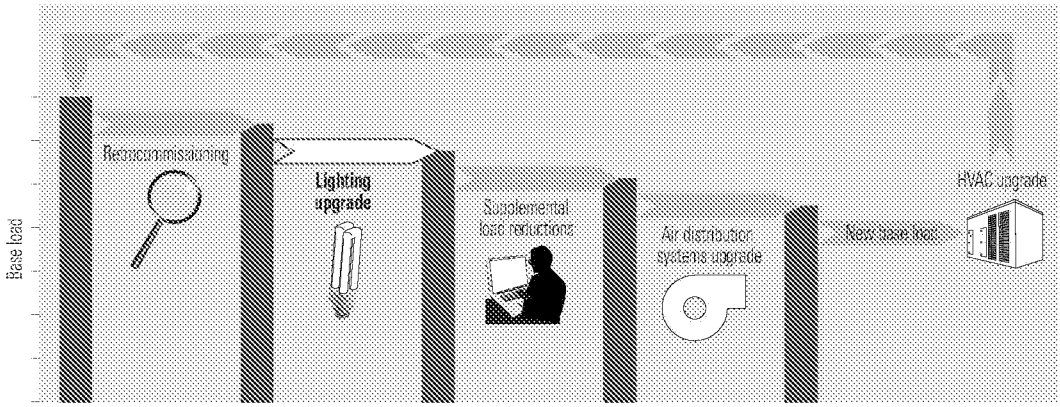

Stages of an integrated upgrade approach

Courtesy: E SOURCE

- Distribute that light to prevent glare.
- Use daylight whenever possible but avoid direct sunlight, and install controls to reduce the use of electric lights in response to daylight.
- Use the most efficient light source for the application: high-performance fluorescent systems as the primary light source for most commercial spaces; compact fluorescent lamps in place of incandescent bulbs in most cases; and high-intensity discharge lamps where appropriate.
- Use automatic controls to turn lights off or dim lights as appropriate.
- Plan for and carry out the commissioning of all lighting systems to ensure that they are performing as required, and create a schedule to retrocommission systems periodically.
- Design lighting systems with ongoing maintenance in mind, and include a comprehensive plan for group relamping, fixture cleaning, and proper disposal of old lamps and ballasts.

Dozens of companies have followed these steps to improve their lighting systems. To see descriptions of buildings that have upgraded their lighting systems as part of an ongoing building upgrade process, visit www.energystar.gov/index.cfm?fuseaction=labeled_buildings.showUpgradeSearch&building_type_id=ALL&s_code=ALL&profiles=0&also_search_id=UPGRADE, click on Stage 2, and submit.

6.2 The Importance of Lighting

Lighting uses about 18 percent of the electricity generated in the U.S., and another 4 to 5 percent goes to remove the waste heat generated by those lights. Lighting in commercial buildings accounts for close to 71 percent of overall lighting electricity use in the U.S. With good design, lighting energy use in most buildings can be cut at least in half while maintaining or improving lighting quality. Such designs typically pay for themselves in energy savings alone within a few years, and they offer more benefits in terms of the potential for smaller and less costly cooling systems and more-productive work environments.

Lighting and Your Building

Lighting is a significant expense in operating a building. It is the largest cost component of a commercial building's electricity bill (**Figure 6.2**) and a significant portion of the total energy bill. When planning full-building upgrades, a lighting upgrade should come early in the process, because it can affect heating and cooling loads and power quality, which can make a significant difference in the specifications for other building systems.

Heating and cooling loads. Lighting systems produce large amounts of heat as well as light. Lighting is typically the largest source of waste heat, often called "heat gain," inside commercial buildings. This internal heat gain may be useful when the building requires heating, but it is counterproductive when the building requires cooling. Energy-efficient lighting adds less heat to a space per unit of light output than inefficient lighting.

By reducing internal heat gain, efficient lighting also reduces a building's cooling requirements. Consequently, the existing cooling system may be able to serve future added loads. In addition, when it comes time to replace a building's cooling systems, the use of efficient lighting leads to reduced cooling loads, which can allow replacement chillers to be smaller and hence less costly to buy and operate.

Figure 6.2: Lighting share of commercial building electricity use

Lighting takes a larger share of a building's electricity use than any other single end use—more than 35 percent.

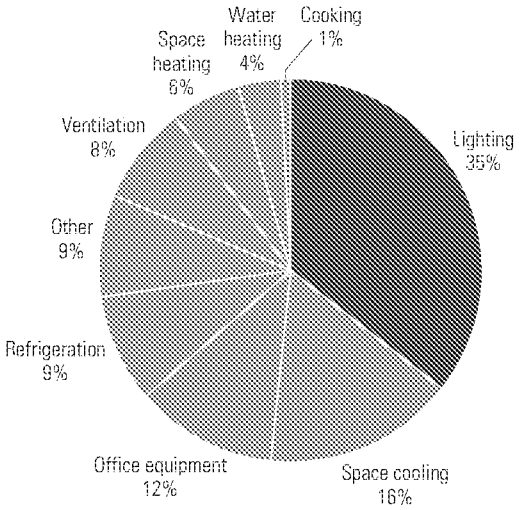

Courtesy: E source; data from *2005 Buildings Energy Data Book*

The net annual effect on HVAC energy use at a site depends on the type of building, the climate, the efficiency of heating and cooling systems, and the relative size of the heating and air-conditioning loads. Large buildings that are dominated by internal loads and use far more air conditioning than heating can experience a site energy HVAC bonus of 40 percent or more. This means that each kilowatt-hour (kWh) of reduction in annual lighting energy use yields an additional 0.4 kWh of annual reduction in HVAC energy by reducing cooling energy more than it increases required heating energy.

For small, envelope-dominated buildings—especially those in cold climates—the net impact may be an HVAC penalty, meaning that each kWh in lighting energy use increases HVAC energy by increasing the annual heating energy use more than it reduces cooling energy.

Lighting upgrades in most commercial buildings are likely to reduce cooling costs more than they increase heating costs, but the precise effect on any given building can be determined by computer simulation. Some simplified methods for approximating the effect are also available. For example, see Lawrence Berkeley National Laboratory (LBNL), *Interactions Between Lighting and Space Conditioning Energy Use in U.S. Commercial Buildings*, LBNL 39795, http://enduse.lbl.gov/info/LBNL-39795.pdf.

Improve power quality. Lighting also affects the power quality of a building's electrical distribution system. Poor power quality is a concern because it wastes energy, reduces electrical capacity, and can harm equipment and the electrical distribution system itself. Upgrading to lighting equipment with clean power quality (high power factor and low harmonic distortion) can improve the power quality in a building's electrical system. Furthermore, upgrading with higher-efficiency and higher-power-factor lighting equipment can also free up valuable electrical capacity. This benefit alone may justify the cost of a lighting upgrade (see sidebar).

CASE STUDY: Lighting Upgrade Improves Electric Load

Columbia University found that upgrading lighting in two adjacent buildings on its campus freed up enough electrical capacity to allow the wiring of all the lighting circuits into one building's electric service. Purchasing the transformers for that one system then became a cost-effective way to place both structures on high-tension service, saving another 29 percent on the two buildings' electric bills. When the costs and savings of this option were combined with those of the lighting upgrades, overall payback remained at about 2.5 years, but total savings nearly doubled, demonstrating the synergistic effects that can result by using lighting upgrades for electric load management. This option was previously unavailable because purchasing the transformers for both buildings yielded an unacceptably high payback.

Lighting and People

A lighting upgrade is an investment not only in reducing electricity consumption but also in improving the way a building supports its occupants. A building's lighting directly affects the comfort, mood, productivity, health, and safety of its occupants. Moreover, as the most visible building system, it also directly affects the aesthetics and image of the building. Successful lighting upgrades take into account the impact of energy-performance choices on building occupants and seek to marry efficiency with improved lighting quality and architectural aesthetics wherever possible. Although such effects are difficult to quantify, comfort, mood, productivity, health, safety, and other effects lighting has on people should be considered as part of every lighting upgrade.

Productivity. Improved lighting enhances visual comfort, reduces eye fatigue, and improves performance on visual tasks. Well-designed lighting may also increase productivity and reduce absenteeism. For example, one lighting upgrade—at a mail-processing center in Reno, Nevada—led to a 6 percent increase in worker output and a reduction in sorting errors. Most lighting upgrades are cost-effective based on energy savings alone, but because costs associated with a building's occupants greatly outweigh other building costs (**Figure 6.3**), any lighting change that improves the interior environment is worth investigating. Those effects are hard to quantify, but research efforts are helping to pin down the benefits (see, for example, the work of the Light Right Consortium, www.lightright.org).

Safety. Lighting also contributes to the safety of occupants and the security of buildings. Emergency lighting must be available during power outages, and minimum levels of light must be available at night when most lighting is turned off. In addition, safety codes require exit signs to highlight escape routes during fires or other emergencies. Outside lighting and indoor night lighting deter crime by exposing intruders' movements and permitting occupants to move safely through the building or to cars. A visually safe environment will not expose people to excessive levels of glare or large differences in luminance levels. Outdoor light levels may depend on local ordinances, but can generally be fairly low—the guidelines laid out by the Illuminating Engineering Society of North America (IESNA, www.iesna.org) suggest 0.5 to 5.0 foot-candles, depending on the level of activity and the potential hazards.

Figure 6.3: Annual operating costs per square foot in a typical office space

Salary costs far outweigh the costs for lighting in a typical office building, so even small improvements in worker productivity, absenteeism, or staff retention will quickly offset the costs of a well-executed lighting upgrade.

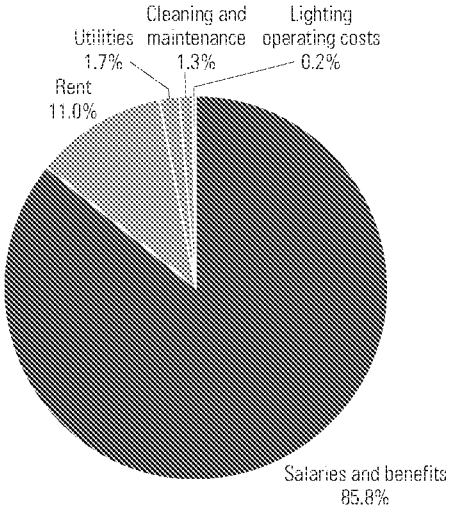

Courtesy: E SOURCE; data from Right Light Consortium

6.3 A Whole-System Approach

A comprehensive lighting upgrade achieves qualitative lighting objectives while maximizing efficiency and profitability. The process begins with the identification of the appropriate quality and quantity of light for various areas of a facility; proceeds through the selection of the best combination of light sources, luminaires, and controls; and includes provisions for maintenance and periodic reviews to ensure that goals for efficiency and quality continue to be met. This whole-system approach takes what is frequently regarded as a complex system of individual decisions and unites them into a strategic plan that ensures that each opportunity is addressed and balanced with other objectives (**Figure 6.4**).

Many lighting-efficiency efforts are oriented toward the installation of specific pieces of equipment, such as electronic ballasts or compact fluorescent downlights. But as with many other types of complex systems, the interactions among system elements in lighting equipment create energy and power savings that can be greater than the sum of their parts. **Table 6.1** illustrates the effects of pursuing incrementally more-aggressive upgrades while maintaining profitability and lighting quality and quantity. Starting with a system of fixtures containing four energy-saver T12 lamps, an upgrade to standard T8 lamps and electronic ballasts can produce energy savings of more than 25 percent; using high-performance T8 lamps boosts savings to more than 40 percent.

The next option begins to capture some system interactions. Each fixture is equipped with a specular reflector and a new acrylic flat prismatic lens. Because these are significantly better at getting light out of the fixture than the old white-painted luminaire and aged diffuser, the fixture can be delamped by 50 percent—to two high-performance T8 lamps—and still provide virtually the same amount of light for the task. Adding reflectors and new lenses to the fixtures enables

Figure 6.4: Comprehensive lighting upgrade strategy

A whole-system approach takes a complex system of individual decisions and unites them into a strategic approach that ensures that each opportunity is addressed and balanced with other objectives. The approach also includes provisions for monitoring and maintenance so that efficiency is maintained and the lighting system accommodates any changes in the use or configuration of the space.

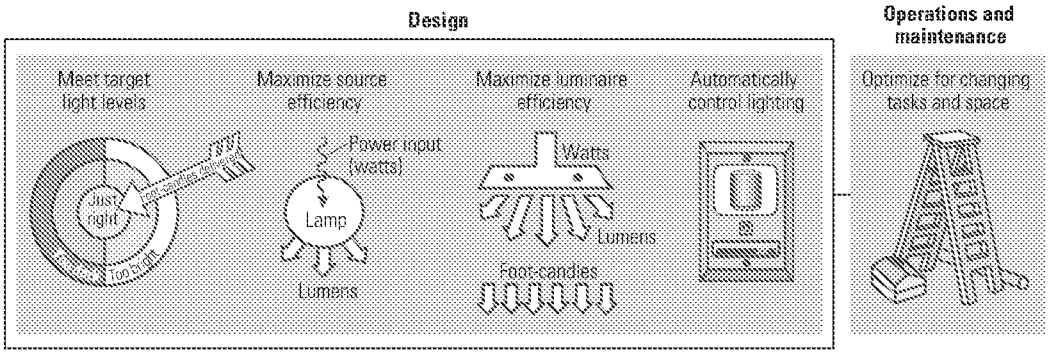

Source: EPA

Table 6.1: Performance comparison of fluorescent retrofit options

Packages of lighting-efficiency measures such as high-performance lamps and ballasts, delamping, and controls achieve deep savings with attractive economics. In each case, it is assumed that a minimum illumination level of 25 foot-candles is maintained and that lamps are replaced at burnout.

Retrofit option	Base case: Energy-saving T12 lamps with magnetic ballasts	Case 1: T8 lamps with electronic ballasts	Case 2: High-performance T8s with electronic ballasts	Case 3: Case 2 + specular reflector + lens + 50% delamping	Case 4: Case 3 + occupancy sensing and daylight dimming
Average maintained foot-candles	25	30	28	25	28
Power per fixture (W)	156	116	90	45	49
Annual energy use (kWh)	7,507	5,568	4,320	2,160	1,275
Energy savings (%)	NA	26	42	71	83
Annual operating cost ($)	826	612	475	238	175
Upgrade cost ($)	NA	1,185	1,320	1,560	2,150
Simple payback (years)	NA	5.5	3.8	2.7	3.3

Notes: kWh = kilowatt-hour; NA = not applicable; W = watt.

Courtesy: *E SOURCE Lighting Technology Atlas* (2005)

Assumptions:

1. Fixture cleaning occurs at end of the rated life, base case. Assuming burn hours of 4,000 hours per year and a 20,000-hour rated life, that works out to five years between cleanings and a total dirt loss of 30 percent.
2. The specular reflector retrofit kit is designed to maintain the same spacing ratio.
3. The existing diffuser has yellowed and gathered sufficient adhesive dirt (which isn't easily removed during routine cleaning) to reduce transmittance by another 10 percent.
4. Energy costs: demand = $10 per kilowatt per month (all 12 months of the year); consumption = 7¢ per kWh (all times of day).

delamping—a reduction in the number of lamps required per fixture—with little loss in light levels, for a savings of 71 percent compared to the base case. Adding occupancy sensors and daylighting controls can boost savings to more than 80 percent compared to the base case, and more than 50 percent compared to a system with standard-grade T8 lamps and electronic ballasts.

Another option is to replace existing fixtures with new fixtures, rather than upgrading the various elements. Upgrading the elements can be less costly and less disruptive to ongoing operations, but new fixtures are a good approach if you want to convert from direct to indirect lighting, use a different type of light source (for example, replace high-intensity discharge lighting with fluorescent lighting), incorporate some of the advanced lighting control technologies, or provide lower levels of ambient lighting while increasing task lighting levels.

6.4 Lighting Design

Successful lighting design begins with an assessment of occupants' lighting needs, which depend on the tasks performed in the workspace. The lighting system should be designed to provide the quantity and quality of light responsive to those requirements. Chapter 10 of the *IESNA Lighting Handbook* (9th edition), "Quality of the Visual Environment," identifies several issues that should be considered, including color, daylight availability, glare, and light distribution. Retrofits that skip this assessment may perpetuate designs that have become inadequate because of workspace rearrangements or changing tasks (for example, moving from paper-based to computer-based tasks). The principles and guidance that apply to interior lighting are applicable to exterior lighting as well. Outdoor lighting that is designed and implemented properly should be cost-effective, should control light by directing it where it is needed, should reduce glare and distribute illumination evenly, and should reduce light trespass.

The Right Quantity of Light

The quantity of light, or foot-candle illuminance level, that makes up an acceptable design depends on the tasks being performed in the space. Chapter 10 of the *IESNA Lighting Handbook* includes a "Lighting Design Guide" that provides recommended illuminances for seven general application categories, divided into three sets of visual tasks (**Table 6.2**). The guide provides a methodology for combining these seven recommended illuminance levels with 22 other criteria to develop high-quality lighting for hundreds of different applications. IESNA also provides specific luminance recommendations for hundreds of indoor and outdoor activities in 17 recommended practices for various lighting applications.

Keep in mind that the lighting level targets should be considered average maintained levels for the task; they should not necessarily be applied uniformly as the ambient light level for the entire space. Lighting levels should be customized through the use of supplemental task lighting in areas requiring higher localized levels. Target lighting levels should be the sum of the ambient and task lighting levels. This task-ambient lighting design approach creates flexibility to accommodate individual tasks or worker requirements, creates visual interest, and can save considerable energy in comparison to a uniform ambient-level approach.

Room dimensions and finishes also affect the required light output and thus the energy consumption of all interior lighting systems. As much as one-third of the energy used by a lighting system depends on the surrounding interior features, including the ceiling height, number and location of windows, and color and reflectivity of room surfaces and furnishings. Lighting designers can work with architects and interior designers to ensure that features that enhance

Table 6.2: Recommended light levels

The 9th edition of the *IESNA Lighting Handbook* includes a "Lighting Design Guide" that provides recommended illuminances for seven general application categories divided into three sets of visual tasks. The guide also provides a methodology for combining these illuminance levels with 22 other criteria to develop high-quality lighting for hundreds of different applications.

Category	Description	Illuminance (foot-candles)
Orientation and simple visual tasks in public spaces where reading and visual inspection rarely take place and visual performance is not critical. Higher levels recommended for tasks where visual performance might be required.		
A	Public spaces	3
B	Simple orientation for short visits	5
C	Working spaces where simple visual tasks are performed	10
Common visual tasks in commercial, industrial, and residential applications — where visual performance is important. Recommended illuminance levels differ based on the visual tasks being illuminated. Higher levels recommended for visual tasks with critical elements of low contrast or small size.		
D	Performance of visual tasks of high contrast and large size	30
E	Performance of visual tasks of high contrast and small size or low contrast and large size	50
F	Performance of visual tasks of low contrast and small size	100
Special visual tasks including tasks with critical elements of very small or very low contrast. Visual performance is critical. Recommended illuminance levels should be achieved with supplementary task lighting. Higher recommended levels are often achieved by moving the light source closer to the task.		
G	Performance of visual tasks near threshold	300–1,000

Courtesy: *E SOURCE Lighting Technology Atlas* (2005); adapted from *IESNA Lighting Handbook*, 9th edition

lighting levels, such as light-colored finishes, are used wherever possible. This helps minimize the required light output and therefore the energy consumption of the lighting system.

The Right Quality of Light

Lighting quality is the cornerstone of efficient lighting. The most efficient light sources mounted in the best luminaires may save energy, but they will not produce much value for building owners and occupants if they are applied improperly. Lighting designers can ensure high quality by considering such classic elements of lighting design as luminance ratios and color qualities.

Luminance ratios and glare. The eye does not see absolute levels of *illuminance* (the amount of light shining on a surface); it sees differences in *luminance* (the amount of light reflected back from a surface). Eyestrain and fatigue are caused when the eye is forced to adapt continually to different luminances. Therefore, it is important not only to provide the right level of light but also to ensure that light is evenly distributed across the task area. Balancing light levels also ensures that task lighting levels will be adequate throughout the space. Uniformity on vertical surfaces should also be maintained to avoid a gloomy, cave-like atmosphere.

IESNA recommends as good design practice an average luminance ratio of no more than 3 to 1 for close objects and 10 to 1 for distant objects and outdoor applications. In other words, the difference in light level between the task area and the background should be less than a factor of three. Although some designers use variation in illuminance as an organizing theme (for example, to define hallways leading to open offices or as a highlighting strategy in retail areas), large foot-candle variations within a workspace should be avoided.

Glare is the most important quality factor. Glare results when luminance levels—or the differences in luminance levels—are too high and objects appear too bright. Because glare creates discomfort, loss of visual performance, and impaired visibility, it should be minimized wherever possible.

Direct glare is the presence of a bright surface (such as a bare lamp or the sun) in the field of view that causes discomfort or loss in visual performance. This type of glare can be addressed with "cutoff reflectors," which prevent light from shining directly into an occupant's eyes, or with window shades that block direct sunlight.

A specific type of reflected glare called *veiling reflection* is a more challenging issue for the lighting designer. A veiling reflection occurs when light strikes a task and produces shiny spots that overwhelm the task. The decrease in contrast reduces visibility and can cause eyestrain. To combat glare from veiling reflections, imagine that the occupant's visual task is a mirror, and then do not place bright fixtures such that they would appear in that mirror. Because it is difficult to predict exactly where workstations and tasks will be placed, one solution is to avoid direct lighting fixtures entirely. This is partly why indirect lighting fixtures have become popular—they create large areas of moderate brightness rather than small areas of high brightness that may be reflected in such a way as to obscure visual tasks.

Color and spectral content of light sources. There are two common ways to describe the color of light from a source: correlated color temperature (CCT) and color rendering index (CRI). Both metrics should be considered when evaluating light sources.

Correlated color temperature, measured in degrees kelvin (K), refers to the temperature of a blackbody radiator emitting light of comparable color. The scale may seem intuitively backward: The higher the color temperature, the "cooler" or bluer the light. The "right" color temperature for an application may depend on the foot-candle level being maintained. Using lamps with high color temperature at low light levels makes spaces appear cold and dim. Conversely, using lamps with low color temperature at high levels of illumination will make a space look overly colorful. It is particularly important to consider this in dimming applications, because a light source that looks good at 50 foot-candles may not look as good at higher or lower illuminances. This issue is especially important in retail stores and restaurants, where the appearance of objects, people, and food is very important. Another important consideration in selecting an appropriate color temperature is the presence of daylight. For spaces that are daylit, 5,000 K may be the most appropriate CCT.

Color rendering index, measured on a scale of 0 to 100, describes the ability of a light source to render a sample of eight standard colors relative to a reference source. A CRI of 100 means that the source renders the eight standard colors in exactly the same way that the reference light source renders the same colors. CRI is an average value, so it will not describe how a light source renders a specific color. However, in general, high-CRI light sources render colors better than low-CRI sources (**Table 6.3**). A CRI of 80 or greater is considered by the industry to provide excellent color rendering.

Outdoor Lighting

Well-designed outdoor lighting is cost-effective, controls light by directing it where it is needed, reduces glare, distributes illumination evenly, and reduces light trespass. The most common lamps used for outdoor lighting are high-intensity discharge (HID) sources—metal halide and high-pressure sodium. In recent years, compact fluorescent lamps (CFLs) and induction lamps have become viable sources for outdoor lighting as well, offering good color quality and better control options than HID sources. As costs come down and performance improves, light-emitting diodes (LEDs) could become a good choice for outdoor lighting as well. Regardless of the light source, however, the following points are important in the design of exterior lighting:

Table 6.3: Typical CRI values for selected light sources

Light sources with a color rendering index (CRI) of 80 or higher are considered to provide excellent color rendering.

Light source	CRI range
Incandescent	100
Ceramic metal halide	85 to 94
T5 fluorescents	80s
T8 fluorescents	75 to 98[a]
Quartz metal halide	65 to 70
T12 fluorescents	58 to 62
High-pressure sodium	22

Note: a. T8 lamps with CRIs in the 90s offer lower efficacy than other T8 lamps.

Courtesy: E SOURCE

- *Pick the appropriate design illumination level.* An average of 1 foot-candle (or less) is usually sufficient. For more information, refer to the *IESNA Lighting Handbook* and several of its recommended practices.
- *Use IESNA-cutoff luminaires or full-cutoff luminaires.* These types of fixtures do not spread light into the sky above the horizontal.
- *Use whiter light sources.* Recent research, although not yet codified, shows that the whiter light produced by metal halide and fluorescent lamps provides better "seeability" than an equivalent amount of yellowish light from sodium lamps.
- *Provide controls.* Use time clocks, photo cells, motion detectors, or pager controls to run the lights only when needed or to dim them as appropriate.

Light pollution is a major concern in designing exterior lighting. Outdoor lighting ordinances and codes encourage better-quality lighting that reduces glare, light trespass, and energy waste. Many codes are now including the concept of e-zones to distinguish between different types of lighting areas. For example, near national or state parks, wildlife refuges, or astronomical observatories, lighting levels should be much lower than in city centers. The ordinances and community standards vary, and local zoning departments should be contacted before implementing an outdoor lighting project. (For more information, visit the web site of the International Dark Sky Association, www.darksky.org.)

6.5 Use Efficient Light Sources

Efficient lighting begins with the use of as much daylight as possible. After that, choose the lamp/ballast/fixture combination that will maximize efficiency while balancing the considerations of lighting quality and quantity described above. There is a wide variety of light sources to choose from including fluorescent (linear and compact), high-intensity discharge (HID), and newer sources such as induction lamps and light-emitting diodes (LEDs). These sources vary widely in their efficacy, color quality, service life, and the applications for which they are best suited (**Table 6.4**). Historically, fluorescent lighting has been used for high-quality, general-purpose indoor diffuse lighting. HID lighting has been used for industrial and outside lighting. However, technical advances and a flood of new products have led to some crossover in the way

Table 6.4: Typical properties of light-source upgrade alternatives

A variety of lamps are available for energy-efficient upgrades. Linear fluorescent lamps are the most widely used, but each type has applications in which it can be an effective choice. The data listed do not represent the full range of variations for each lamp type, but only the ranges for the most effective choices.

	Lamp property					
Lamp type	Mean efficacy, including ballast (mean lm/W)	Lumen maintenance (%)	Rated life (hours)	Color rendering index	Correlated color temperature (K)	Typical applications
Full-size fluorescent (T5, high-performance T8)	80 to 97	92 to 93	20,000 to 30,000	80 to 85	2,700 to 6,500	General area lighting of all kinds, including open and closed offices, classrooms, and high-bay areas
Compact fluorescent	43 to 71[a]	86	6,000 to 12,000	80 to 85	2,700 to 6,500	Incandescent replacements in table and floor lamps, cans, wall washers, and sconces
Quartz pulse-start metal halide	60 to 80[a]	65 to 75	20,000	65 to 70	2,900 to 4,200	Outdoor lighting, high-bay lighting, and remote-source lighting
Ceramic pulse-start metal halide	60 to 80[a]	80	20,000	85 to 94	2,900 to 4,200	Where color is critical, including high-bay and retail applications
High-pressure sodium	60 to 110[a]	85 to 90	24,000	22	1,900 to 2,200	Outdoor lighting and in high-bay applications where color is not critical
Induction	50 to 60[a]	70 at 60,000 hours; 55 at 100,000 hours	100,000	80	2,700 to 4,100	Where maintenance costs are high, including roadways and tunnels, parking garages, escalator wells, warehouses, and malls
LED	15 to 30	70	50,000[b]	80 to 90	2,700 to 10,000	In color-based applications such as exit signs, niche applications such as outdoor signage, task lamps, and accent lighting

Notes: K = kelvin; LED = light-emitting diode; lm/W = lumen per watt.
a. Higher efficacies for higher-wattage lamps.
b. Time at which output has degraded to 70 percent of initial output.

Courtesy: E SOURCE

these lamps are applied—fluorescent lighting is now the most effective choice for many industrial and exterior lighting applications, while HID lighting (specifically metal halide) is now a good choice for some interior uses.

Make Use of Daylight

The most efficient source of light is the sun, effectively providing up to 140 lumens (lm) of light for each watt (W) of heat energy, which compares favorably with the 90 lm/W from an efficient electric lighting system. Systems that use daylight to supplement electric lighting offer the potential to cut energy use, reduce peak demand, and create a more desirable indoor environment. However, it takes careful planning to achieve all the possible benefits from a daylighting system, and a number of resources are available on the web to help in the effort (see sidebar). As an overall guide, follow these four basic principles to produce an effective daylighting system:

- *Bring in the light.* Light can be brought into a building via conventional glazing, light shelves, skylights, and clerestory windows (**Figure 6.5**) or with more advanced approaches such as light pipes or specialized reflective materials.

- *Eliminate glare.* Glare is the number-one killer of daylighting systems—direct sunlight can cause very uneven luminance ratios that are distracting or even painful to occupants. Means for combating glare include using translucent materials and bouncing direct light off surfaces such as painted walls, perforated metal, or fabrics.

- *Adjust electric lights as appropriate.* Without lighting controls, daylighting will not save any energy. Automatic controls that sense ambient daylight are the best approach, because they ensure that electric lighting will be reduced when enough daylight is available. **Figure 6.6** shows how an automatic daylight control system installed at a grocery store cut energy use by 30 percent and decreased demand during peak hours.

- *Commission the system.* Many daylighting systems fail to deliver the expected benefit because they are not commissioned. Commissioning consists of adjusting photosensors and ensuring proper sensor placement so that the electric lighting system responds properly to the presence of daylight.

Figure 6.5: Simple daylighting techniques

A mix of top- and side-lighting, light shelves, high-reflectance ceilings, and wall diffusion provides fairly uniform deep-plan daylighting without the glare of direct sun.

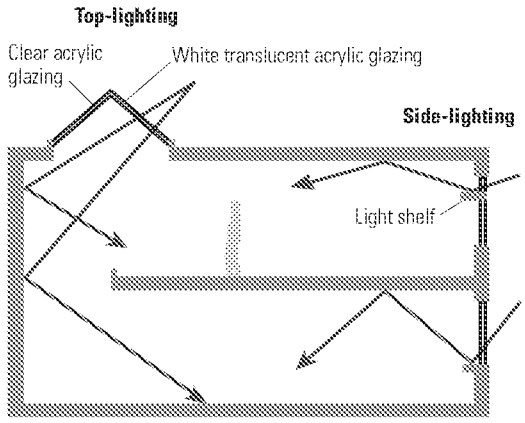

Courtesy: *E SOURCE Lighting Technology Atlas* (2005)

Figure 6.6: Skylights cut lighting energy use

A grocery store in Valencia, California, used skylights and photocells to reduce lighting energy use by 30 percent during a monitored two-week period.

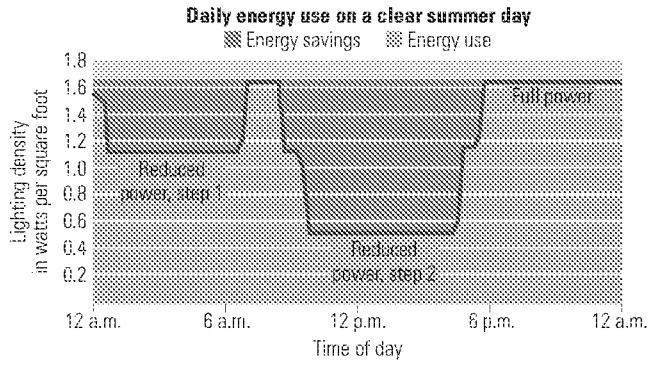

Source: California Energy Commission, PIER program

Properly planning and implementing a lighting control system will reduce the chances of over-dimming, under-dimming, and rapid cycling—problems that frequently occur in daylighting systems. These problems can often lead to users overriding the control system and eliminating any savings that may have accrued.

Linear Fluorescent Lamps

Fluorescent lighting systems offer high efficacy, long life, and good light quality, and they generally have few operational limitations for most indoor lighting applications. They are the best choice for general lighting in commercial, institutional, and industrial spaces with low to medium ceiling height. In addition, the introduction of high-intensity fluorescent lamps and fixtures makes fluorescent systems a leading choice for areas with high ceilings (more than 15

RESOURCES: Daylighting

A number of daylighting resources, including reference guides, case histories, and software, are available free of charge on the web:

Daylight in Buildings: Source Book on Daylighting Systems and Components
http://gaia.lbl.gov/iea21

This comprehensive reference book, published by Lawrence Berkeley National Laboratory's Building Technologies Department, describes and evaluates new and innovative technologies for using daylight in buildings.

Daylight Dividends www.daylightdividends.org

The Lighting Research Center maintains a web site that provides information, including case studies, aimed at building owners, architects, and engineers interested in the benefits of natural light.

BetterBricks www.betterbricks.com/default.aspx?pid=lightinglabs

This organization sponsors a network of university-associated laboratories throughout the northwest region of the United States. Its labs offer free analysis and consultation.

DesignLights Consortium www.designlights.org

This group offers guidelines on skylighting for warehouses and retail outlets and also provides case studies and software for skylight system design.

Wisconsin Daylighting Collaborative/Energy Center of Wisconsin www.daylighting.org

The collaborative provides case studies, training programs, demonstrations, and design assistance.

Skycalc www.energydesignresources.com/resource/129

Skycalc is a Microsoft Excel–based software tool that assists designers in developing daylighting strategies that use skylights.

SPOT www.archenergy.com/SPOT/index.html

The Sensor Placement and Orientation Tool (SPOT) helps designers establish correct photosensor placement relative to a proposed daylighting electric lighting design. It also analyzes and predicts overall system performance prior to field installation and commissioning.

feet)—the type of application that used to be the exclusive domain of HID light sources (see sidebar). A successful upgrade using fluorescent lamps requires careful consideration of options for lamps (diameter, length, intensity, and phosphor blend) and ballasts (electronic versus magnetic, rapid-start or programmed rapid-start versus instant-start).

Picking the right fluorescent lamp. Manufacturers have introduced a wide array of linear fluorescent lamp choices, including reduced-wattage, premium, and high-performance versions. There are also choices of CCT, CRI, lamp diameter, light output level (standard, high-output, or very high output), and starting method (rapid-start, programmed rapid-start, or instant-start). For most general lighting upgrades, the best choices are:

- *T8 (eight-eighths of an inch in diameter) or T5 (five-eighths of an inch in diameter) lamps.* The most efficient T8s are the high-performance type, also commonly called "super T8s" (**Table 6.5**). High-performance T8 lamps can be installed to replace T12 lamps and even cost-effectively upgrade lower-quality T8s. An office building in Minneapolis owned and managed by Hines upgraded more than 15,000 fixtures from T12 to T8 technology on its way to achieving and maintaining ENERGY STAR status. A retrofit from standard T8 lamps to high-performance T8s in modular classrooms in California cut lighting power from 116 W to 74 W and decreased air-conditioning loads in the confined classroom spaces. High-performance T8 lamps provide their biggest boost in efficiency when they are combined with high-performance ballasts. Reduced-wattage T8s, sometimes called "energy-saver" lamps, can also provide energy savings, but they have several shortcomings: They can only operate in spaces where temperatures are kept at a minimum of 60° Fahrenheit (F), they produce less light than full-wattage lamps, and they are not dimmable with current ballast technology.

  T5 lamps, on the other hand, come only in metric lengths, which means that they are not a good retrofit option, unless fixtures are being replaced as well as lamps and ballasts. The efficacy of T5s is similar to that of T8 lamps, but because they are smaller they provide better optical control. T5 lamps also offer high lumen maintenance, putting out as much as 97 percent of their original light output at 40 percent of rated life. T5 lamps also offer better performance than T8s in enclosed fixtures and warm spaces because they are designed for a higher operating temperature.

- *Four-foot lamps.* The most common length for T8 lamps is four feet, which makes it the cheapest and easiest length to buy and stock. Eight-foot lamps are slightly more efficient, but they break more easily and can be difficult to transport.

CASE STUDY: Upgrade to Fluorescents Improves Distribution Center Lighting

Demoula's Market Basket supermarket chain converted the lighting in its main warehouse distribution center in New England from high-intensity discharge to fluorescent equipment. The new fixtures, each of which houses six high-output T5 lamps, replaced 400-watt mercury vapor or high-pressure sodium fixtures on a one-for-one basis. The connected load was reduced from 460 to 351 watts per fixture. When aisles are vacant, occupancy sensors now turn off four of the lamps to drop the lighting energy by two-thirds (to 117 watts per fixture). In addition to achieving over 50 percent energy savings, the new lighting is much brighter, has better color, and offers instant-on and instant-restrike capabilities.

Table 6.5: The T8 family tree

Linear T8 fluorescent lamps are available with a wide variety of characteristics. The high-performance T8 lamps offer the highest output and the best color quality.

Lamp type	Nominal power (W)	CRI	Efficacy (lm/W)
700 series	32	70s	<85
800 series	32	Low 80s	87 to 94
High performance (super T8)	32	High 80s	94 to 100
Energy saver	30	High 80s	94 to 100
Reduced wattage	28	High 80s	94 to 100
Reduced wattage	25	High 80s	94 to 100

Notes: CRI = color rendering index; lm/W = lumens per watt; W = watt.

Courtesy: E SOURCE; data from Consortium for Energy Efficiency

- *Standard light output.* Standard-output lamps are more efficient and less costly than high-output (HO) and very high output (VHO) systems, and they are available with a wider range of color temperatures. T5HO lamps are often used for high-bay applications because their high-intensity light is useful in large spaces.

- *CRI in the 80s.* Light sources with a CRI in the 80s provide good color rendering—far better than the old "cool-white" T12 lamps that provided a CRI in the 60s. Fluorescent lamps with CRIs in the 90s are available, but they carry a substantial penalty in efficacy.

- *CCT of 3,500 K to 4,100 K.* A CCT of 3,500 K is a good middle ground that can blend acceptably with warmer incandescent lights or earth-tone color schemes; 4,100-K lamps may blend better with cooler daylight, HID sources, or blue-gray color schemes.

Picking the right fluorescent ballast. Ballast choices can be equally bewildering. The best choices for ballasts are:

- *Electronic (high-frequency).* Electronic ballasts are about 12 percent more efficient than conventional magnetic ballasts. They eliminate flicker and hum and are extremely cost-effective. The most efficient units are high-performance ballasts as defined by the Consortium for Energy Efficiency (www.cee1.org/com/com-lt/com-lt-specs.pdf).

- *Instant-start.* This is the most efficient type of ballast, but it yields the shortest lamp life in applications with frequent on/off cycling. Instant-start ballasts are a good choice for lamps that burn six hours or more per start.

- *Programmed-start.* Programmed-start ballasts, also called programmed rapid-start ballasts, represent the next step in the evolution of rapid-start technology. Their use increases lamp life but carries some penalty in efficiency. They are the best choice in applications where lights will frequently be turned on and off, as often happens when occupancy sensors are used.

- *Universal-input.* Universal-input ballasts typically accept any input voltage between 120 and 277 volts. They make retrofitting easier and reduce stocking requirements, but provide slightly lower efficiency than dedicated-voltage ballasts.

Finally, make sure that lamps and ballasts are compatible. Most lamps are only compatible with one starting method; the major exception is high-performance T8s, which can use either rapid- or instant-start ballasts.

Compact Fluorescent Lamps

Use compact fluorescent lamps (CFLs) to replace incandescent lamps in downlights, sconces, table lamps, task lights, and wall washers. They cost more initially than incandescent lamps do, but quickly pay for themselves through energy and maintenance savings. The longer the annual operating hours, the more attractive the economics of CFLs become, because more incandescent relamping costs are being avoided per year.

CFLs come in two general forms—self-ballasted or pin-base. Self-ballasted CFLs—also known as screw-base, screw-in, or integrally ballasted CFLs—can replace incandescent lamps without modifications to the existing fixtures. They combine a lamp, ballast, and base in a single sealed assembly that is discarded when the lamp or ballast burns out.

Pin-base CFLs, the type most commonly employed in commercial buildings, are used with a separate ballast. They are available in lower-power versions, which can replace incandescent lamps, and in higher-power versions, which can replace linear fluorescent lamps or HID lamps. Pin-base systems feature a ballast and pin-base fluorescent lamp socket that is wired into a fixture by the fixture manufacturer or as part of a retrofit kit. Because they are hardwired, dedicated systems, they eliminate the possibility that a user will return to using an inefficient incandescent bulb.

One of the most common uses of CFLs in commercial buildings is in recessed downlight cans. A wide range of fixtures is now available for this fixture class, some with very good reflector designs, good optical control, and dimming capabilities. Care must be taken in this application to ensure that excess heat buildup does not shorten the lamp life.

When using CFLs, remember these key points:

- *Go for a 3:1 ratio.* Lamp manufacturers often publish a 4:1 ratio for replacing incandescent bulbs with CFLs (that is, a 25-W CFL can replace a 100-W incandescent lamp). A 3:1 ratio is more appropriate (a 25-W CFL can replace a 75-W incandescent lamp)—in practice, CFL output is lower than the nominal rating because of lumen degradation and the effects of temperature and position on lamp output.
- *Limit the number of CFL types.* CFLs are available in a wide variety of sizes and shapes—it is useful to standardize on just a few types to reduce stocking requirements and confusion at relamping time.
- *Use dedicated fixtures.* To prevent the replacement of CFLs with incandescent bulbs when it is time to relamp, use dedicated fixtures that will only accept pin-based CFLs.
- *Choose CFLs that have earned the ENERGY STAR.* This rating from the EPA ensures reliability as well as efficiency in self-ballasted CFLs (visit www.energystar.gov/index.cfm?c=cfls.pr_cfls for more information).

High-Intensity Discharge Lamps

Wherever an intense point source of light is required, HID light sources are the primary alternative to high-wattage incandescent lamps. Although HID lamps can provide high efficacy in a wide range of sizes, they have special requirements for start-up time, restrike time, safety, and mounting position. The basic types of HID lamps include mercury vapor, metal halide, and sodium, but mercury vapor lamps are an old, inefficient technology and should not be part of any upgrade plans. The primary uses for HID lighting are outdoor lighting, high-bay lighting, retail lighting, and remote-source lighting (**Table 6.6**).

Metal halide lamps. Metal halide lamps offer good color quality and efficacies of up to 100 lm/W. Were it not for several limitations, metal halide lamps might be considered the ideal light source. The limitations include:

- *Long start-up times.* Starting the lamps initially takes three to five minutes, and restarting after a shutdown or power outage takes 10 to 20 minutes. The introduction of electronic ballasts has reduced but not eliminated these delays (**Table 6.7**).
- *High UV output.* Metal halide lamps produce relatively high levels of ultraviolet (UV) radiation that must be controlled with shielding glass in the lamp or fixture. Protection from possible explosion is also required.
- *Color shifting.* The color of the light output from a metal halide lamp can shift, sometimes dramatically and randomly. The use of electronic ballasts and ceramic metal halide lamps reduces this effect.
- *Lamp position.* The light output of metal halide lamps is sensitive to the position of the lamp. (Sodium lamps are not position-sensitive.)

Table 6.6: Applications for HID light sources

Good color properties and a wide range of sizes make metal halide lamps the most versatile high-intensity discharge (HID) light source.

Application	Metal halide	Ceramic metal halide	High-pressure sodium	Low-pressure sodium
Interior, decorative	x	x		
Downlights	x	x		
Parking areas	x		x	x
General outdoor	x		x	x
Roadways or tunnels	x		x	x
Sports arenas	x	x		
High-bay spaces (including hangars and warehouses)	x	x	x	
Low-bay spaces (including supermarkets, light industrial, or retail shops)	x	x	x	
Outdoor signage	x			

Courtesy: E SOURCE

Table 6.7: Metal halide warm-up and restrike times

Electronic ballasts have shortened warm-up and restrike times for pulse-start metal halide lamps but have not eliminated them entirely.

Lamp/ballast type	Warm-up time (minutes)	Restrike time (minutes)
Probe-start/magnetic	4 to 5	10 to 20
Pulse-start/magnetic	2 to 3	3 to 5
Ceramic/magnetic	2 to 3	10 to 20
Quartz pulse-start/electronic	1 to 3	2 to 4
Ceramic/electronic	1 to 3	10 to 20

Courtesy: E SOURCE; data from Stan Walerczyk

Several developments in technology have made metal halide systems more effective. Manufacturers introduced pulse-start technology in the late 1980s and early 1990s to improve on the performance of older probe-start technology. More recently, electronic ballasts and ceramic metal halide lamps have improved performance even further. Ceramic metal halide lamps offer better CRI and lower lumen depreciation rates then the conventional quartz version. Electronic ballasts improve efficiency and color stability, reduce lumen depreciation rates, and cut warm-up and restrike times (**Table 6.8**). Many electronic ballasts are also dimmable.

Despite their limitations, metal halide lamps can be a good option in a number of applications, including outdoor and high-bay lighting. Ceramic metal halide lamps are also a good choice wherever color quality is critical, including retail lighting and some manufacturing operations. For example, a retrofit of ceramic metal halide lamps with a CRI of 92 is helping maintenance workers do their jobs better in the Alaska Airlines maintenance hangar at Seattle-Tacoma airport.

Sodium lamps. There are two types of sodium lamps: high-pressure sodium (HPS) and low-pressure sodium (LPS). HPS lamps, which produce a yellowish light, vary widely in their efficacy and color quality. Three basic grades are available, based on CRI: The lowest, with a CRI of about 21, is typically used for outdoor lighting; general-purpose indoor units have a CRI of around 60; and the less-common "white" versions boast a CRI up to 80 or higher. For this last type of lamp, better color comes at the cost of lower efficacy and shorter lamp life. The most common application of HPS lamps is for roadway and parking-lot lighting. The applications of LPS lighting are extremely limited by the nearly monochromatic yellow light they produce. One of the few applications for LPS lamps is outdoor lighting near observatories, where the narrow wavelength band can more easily be filtered from the view of the telescope.

Other Light Sources

Two other light sources bear consideration for some lighting upgrade applications: LEDs and induction lamps.

LEDs. light-emitting diodes are solid-state electronic devices that create light. They offer several advantages over conventional light sources, including long life and vibration resistance. Their small size and the directional nature of their light output are also beneficial in some cases. These characteristics have enabled LEDs to displace incandescent lamps in some applications, but efficiency still needs to improve significantly and costs need to decrease before LEDs are a cost-effective replacement for higher-efficiency sources such as fluorescent lamps.

Table 6.8: Ceramics boost metal halide performance

Ceramic arc tubes boost the color quality and lumen maintenance of pulse-start metal halide lamps.

Property	Quartz metal halide	Ceramic metal halide
CRI	65 to 70	90 to 95
End-of-life lumen maintenance with electronic ballast (%)	70	80

Notes: CRI = color rendering index.
Data are for 250- to 400-watt lamps.

Courtesy: E SOURCE

The most successful early applications for LEDs have been those where they replace filtered incandescent bulbs, such as in traffic signals and exit signs, because the filtering of the emitted incandescent light makes an already inefficient source even less efficient. The efficacy of incandescent lamps is relatively low: about 17 lumens per watt for a conventional 100-watt bulb. When incandescent lamps are used to produce colored light, an absorptive filter is placed in front of the white light source to absorb all colors except those that are required for the application. When red light is needed for, say, an exit sign, this absorptive filter reduces the efficacy of the incandescent lamp-plus-filter combination to less than 5 lm/W. With LEDs, the color of the light they generate depends on the materials used to construct the LED, not on a filter. Modern, high-brightness red LEDs operate with an efficacy of 20 to 30 lumens per watt, which makes them much more efficient sources of red light than filtered incandescent lamps.

The other area where high-brightness LEDs have displaced other light sources is large outdoor displays. And retail accent lighting is a growing area for LEDs, because LEDs provide the ability to vary color, create sparkle, and aim the light precisely. Many facilities have already replaced incandescent exit signs with LED signs, cutting the energy used by the signs by 80 percent or more in the process. For information on ENERGY STAR–qualified exit signs, most of which use LEDs, visit www.energystar.gov/index.cfm?c=exit_signs.pr_exit_signs.

For general illumination, LEDs have great potential but are still under development. As of 2006 the most efficient white LEDs available offered an efficacy of about 30 lumens per watt in real-world conditions—and producing white light with LEDs still costs far more than it does with other light sources. (For updates on the status of LED lighting, visit the U.S. Department of Energy's "Solid State Lighting" web site, www.netl.doe.gov/ssl.)

Induction lamps. Induction lamps, also called electrodeless lamps, consist of a high-frequency power generator, a coupling device that generates a magnetic field (essentially an antenna), and a glass housing that contains the gases and phosphor coating—no electrodes required. The main advantages of induction lighting are the ability to produce a substantial amount of light in a relatively compact package and a long lamp life due to the elimination of the electrodes. The major drawback of induction lighting is high installed cost. In applications where maintenance costs are high, though, induction lighting systems can be cost-effective.

Existing induction-lamp products are aimed at two distinct market niches. The higher-wattage versions available (55 to 165 W) offer very long life (up to 100,000 hours) and can be a good choice anywhere that relamping and maintenance are difficult or hazardous. These lamps have been used in all of the following locations:

- Escalator wells
- High-ceilinged spaces, including atriums (such as over open mall areas) and in warehouses and factories
- Parking garages
- Roadways, including bridges, tunnels, underpasses, and signs
- Exterior pedestrian lighting

Lower-wattage induction lamps (20 and 23 watts) are also available as direct replacements for medium-base incandescent and compact fluorescent lamps. They offer efficacies of about 50 lumens per watt, CRIs of 82, and an expected life of 15,000 hours.

6.6 Use Efficient Luminaires

Many lighting projects use efficient lighting sources but fail to deliver the light in an efficient manner. To make the best use of an efficient source, it is essential to consider the efficiency and light distribution of the fixture that will deliver the light from the source. The fixture efficiency is a measure of how much of the light produced by the light source actually gets out of the fixture. It can vary from a low of about 50 percent to a high near 100 percent. In practice, fixture efficiency can make a big difference in a lighting system's overall efficiency—a fixture with an efficiency of 90 percent will deliver 50 percent more of its light than one with an efficiency of only 60 percent. To illustrate the impact improved efficiency can have, a designer who uses a fixture with a 90 percent efficiency and needs 100 fixtures to provide adequate lighting would have needed 150 fixtures to provide the same amount of light with the less-efficient fixture, all else being equal. Lighting fixtures for commercial installations are classified as direct, indirect, or indirect/direct (**Figure 6.7**).

Direct Lighting

The most common and lowest first-cost approach for general commercial lighting is direct downlighting with 2-by-4 or 2-by-2 fluorescent fixtures. This design provides good illumination for horizontal tasks, but it leaves ceilings and wall surfaces dark, creating a cave effect. It also may cause glare for computer-based work, because the fixtures may use bright lamps or lenses that can be reflected in computer screens. These fixtures may also be a source of direct glare into an occupant's eyes. The pattern of light distribution from a direct fixture is determined by the reflectors and lenses or diffusers it uses.

Reflectors. Reflectors are inserts designed to reduce the internal light loss in fixtures by using highly reflective surfaces to redirect light out of the fixture. They can be used in new fixtures or installed in existing fixtures as part of an energy-savings retrofit strategy.

Figure 6.7: Fixtures have their ups and downs

Lighting fixtures may send all or most of their light downward (A), upward (B), or a mixture of the two (C).

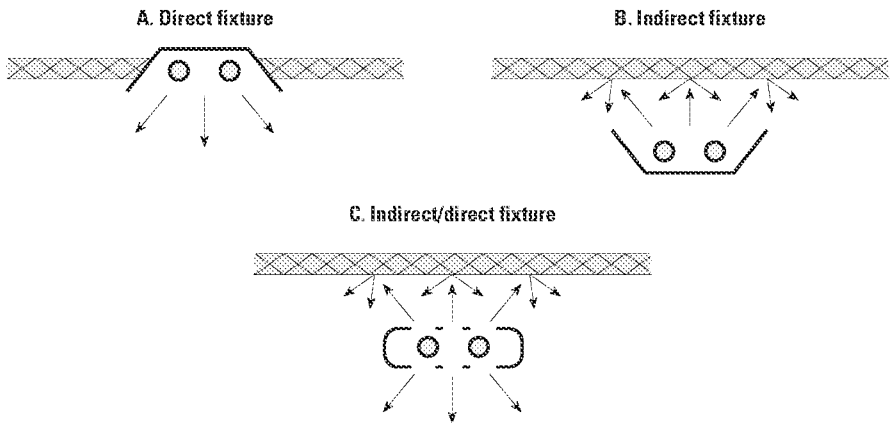

Courtesy: *E source Lighting Technology Atlas* (2005)

Most high-efficiency fixtures use specular reflectors, which perform like mirrors to aim light in particular directions. The same fixture with a different reflector design can produce a very different distribution pattern. Light distribution also varies according to the horizontal orientation of the fixture. Although a spherical HID fixture usually distributes its light in a uniform, circular pattern, many of the more efficient fluorescent fixtures emit light differently along their length than they do at the ends. This pattern can be used to improve system efficiency in applications such as narrow warehouse aisles.

Specular reflectors can also be retrofitted into existing fixtures, providing a 12 to 16 percent efficacy improvement over new white-enamel diffuse reflectors. These retrofitted reflectors provide more directional control than the white paint that is often employed, and they can be used to widen or narrow the light distribution from the fixtures. In some cases, the use of reflectors and high-efficiency sources enables delamping.

Lenses and diffusers. Most indoor commercial fixtures use some type of diffuser, lens, or louver over the face of the fixture to block direct view of the lamp or to diffuse or redirect light. Diffusers are simply semitranslucent plastic sheets that hide lamp images and diffuse light evenly across the face of the fixture. Because they spread light in all directions and absorb a large amount of light, diffusers are not only inefficient but also ineffective at controlling glare. Using clear plastic lenses with small prismatic surface patterns instead of diffusers improves efficiency and the distribution of light.

Louvers. Specular parabolic cube (or "paracube") louvers can reduce the light loss that occurs with translucent lenses. By employing highly reflective surfaces shaped to send light down to a task (instead of bouncing it back and forth between parallel surfaces, as occurs with "eggcrate"-style louvers), these devices block lamp images, reducing the potential for reflected glare in computer screens or other shiny materials. Paracube louvers with openings smaller than 1 inch are effective at reducing glare, but they absorb a great deal of light and dramatically reduce fixture efficiency. Appropriate louver cube sizing (over 1.5 inches) typically requires a deeper fixture and a different method of attachment than conventional shallow fixtures can provide. Large-cell parabolic louvers can create an acceptable appearance and distribution, adding value to a lighting upgrade.

Indirect Lighting

The best type of lighting system for glare control and visual comfort is an indirect or indirect/direct system. Indirect lighting can make a space feel brighter with less light because it illuminates the ceiling and top portions of walls. If the ceiling and walls are made of a light-colored material, little light is lost with this approach. Indirect light works well within a task-ambient lighting scheme and is also very appropriate for work areas that use computer terminals. Indirect lighting is most useful in rooms with ceilings that are a bit higher than normal (10 feet or higher would be ideal, but 9 feet is acceptable). For lower ceiling heights, recessed direct/indirect fixtures—which provide a mixture of direct and indirect illumination—can be considered, or indirect fixtures can be integrated into or mounted onto office furniture.

The introduction of T5 fluorescent lamps, which are thinner and provide a higher intensity of light output than T8 lamps, has widened the applicability of indirect lighting. The high light output of T5 lamps means that rows of indirect fixtures can be placed as much as 12 to 15 feet apart on ceilings as low as 9 feet (some manufacturers claim that the fixtures can be used on ceilings 8 feet 6 inches or lower) and still provide uniform ceiling illumination levels. Wider spacing means that fewer fixtures need to be used in a given space and the overall cost for an installation can be reduced accordingly.

Indirect lighting can also provide another benefit: The even illumination that it provides means that a lower ambient lighting level may work for a given space. For example, 30 foot-candles of indirect illumination may be sufficient in a location where 40 or 50 foot-candles of direct lighting would be required to provide a similar work environment.

6.7 Automatically Control Lighting

Reducing the connected load of the lighting system represents only one part of the potential for maximizing energy savings. The other part is minimizing the use of that load through automatic controls. Automatic controls switch or dim lighting based on time, occupancy, lighting-level strategies, or a combination of all three. In situations where lighting may be on longer than needed, left on in unoccupied areas, or used when sufficient daylight exists, consider installing automatic controls as a supplement or replacement for manual controls.

The general control strategies used by lighting designers include:

- *Occupancy sensing,* in which lights are turned on and off or dimmed according to occupancy;
- *Scheduling,* in which lights are turned on and off according to a schedule;
- *Tuning,* in which light output is reduced to meet current user needs;
- *Daylight harvesting,* in which electric lights are dimmed or turned off in response to the presence of daylight;
- *Demand response,* in which power to electric lights is reduced in response to utility curtailment signals or to reduce peak power charges at a facility; and
- *Adaptive compensation,* in which light levels are lowered at night to take advantage of the fact that people need and prefer less light at night than they do during the day.

These strategies can be accomplished by means of various control devices, including on-off controls, dimming controls, and systems that combine the use of both types of equipment (**Table 6.9**). These controls can be quite sophisticated, but in general they perform two basic functions: They turn lights off when not needed, and they modulate light output so that no more light than necessary is produced. The equipment required to achieve these functions varies in complexity from simple timers to intricate electronic dimming circuits. Each of these technologies can be applied individually to great effect or combined for even greater benefit. Whatever control strategy is employed, steps must also be taken to commission the system to make sure that it performs as expected, and plans must be made for retrocommissioning the system over time so that it continues to perform that way.

On-Off Controls

The simplest way to reduce the amount of energy consumed by lighting systems is to turn lights off when they are not needed. All electric lights come with a manual switch for that purpose, but these switches are not used as often as they could be. As a result, the lighting industry offers several automatic switches that either mark time or sense the presence of occupants.

Occupancy sensors. Occupancy sensors are most effective in spaces where people move in and out frequently in unpredictable patterns: for example, private offices, lecture halls, auditoriums, warehouses, restrooms, and conference rooms. Occupancy sensors are less likely to be effective in open-plan offices, where one or more people may be present throughout the day, or

in reception areas, lobbies, retail spaces, or hospital rooms. The savings achievable with occupancy sensors, even in the most appropriate spaces, varies widely, depending on local conditions.

The three most common types of occupancy sensors are passive infrared (PIR), ultrasonic, and those that combine the two technologies. PIR devices are the least expensive and most commonly used type of occupancy sensor. They detect the heat emitted by occupants and are triggered by changes in infrared signals when, for example, a person moves in or out of the sensor's field of view. PIR sensors are quite resistant to false triggering and are best used within a 15-foot radius (**Figure 6.8**).

Ultrasonic devices emit a sound at high frequency—above the levels audible to humans and animals. The sensors are programmed to detect a change in the frequency of the reflected sound. They cover a larger area than PIR sensors and are more sensitive. They are also more prone to

Table 6.9: Lighting control strategies and equipment

A number of different control strategies and a variety of equipment options are available to the lighting designer.

Strategy	Equipment
Occupancy sensing	Occupancy sensors—infrared, ultrasonic, dual technology
Scheduling	Timed switches, energy management systems
Tuning	Continuous dimming, bilevel switching
Daylight harvesting	Continuous dimming, bilevel switching, photosensors
Demand response	Voluntary or automatic curtailment via utility signals, dimmers, switches, energy management systems
Adaptive compensation	Dimming, switching, timers, photocells

Courtesy: E SOURCE; data from *Advanced Lighting Guidelines*

Figure 6.8: Occupancy sensor coverage patterns

Ultrasonic sensors can detect motion at any point within the contour lines. Infrared sensors "see" only in the wedge-shaped zones, and they do not generally see as far as ultrasonic units. Some sensors see farther straight ahead than to the side. The ranges shown here are representative; some sensors may be more or less sensitive.

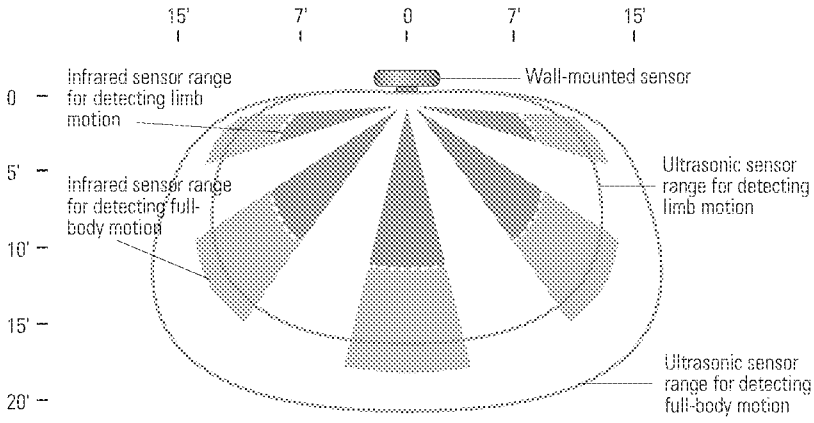

Courtesy: *E SOURCE Lighting Technology Atlas* (2005)

false triggering. For example, ultrasonic sensors can be fooled by the air currents produced by a person running past a door, moving curtains, or the on-off cycling of an HVAC system.

Hybrid devices that incorporate both PIR and ultrasonic sensors are also available. These take advantage of the PIR device's resistance to false triggering and the higher sensitivity of the ultrasonic sensor. Some hybrid sensors combine PIR with sensors for audible sound. That design has proved useful in cases where the frequencies used in ultrasonic sensors interfere with equipment such as hearing aids—a problem that is less frequent than it used to be because sensor manufacturers have learned to use frequencies that minimize the issue.

Evaluating the economic feasibility of an installation is best done by monitoring lighting and occupancy patterns. The use of inexpensive automatic datalogging systems will indicate the total amount of time the lights are on when the space is vacant, the time of day the savings take place, and the frequency of lamp cycling. Data can also be gathered through the use of recording ammeters connected at lighting breaker panels; through random surveys, such as observing a building's exterior at night or interviewing custodial and security personnel; and through existing timers, scheduling controllers, and energy management systems. Whatever way the data is gathered, it is important to account for seasonal variations in operation in order to avoid incorrectly extrapolating short-duration data to a full year. This information will help lead to an informed decision on the economic feasibility of potential occupancy-control opportunities.

Sensor placement is also crucial to success (see sidebar). Wall-mounted sensors are suitable in smaller rooms—offices, bathrooms, and equipment rooms that are only intermittently occupied. In larger spaces or wherever the lighting load is higher, it is better to mount the sensor in the ceiling. Some units can be mounted in the corner or on the wall near the ceiling (**Table 6.10**).

Timed switches. Timed switches operate based on either elapsed time after triggering or on programmed schedules using clock time. Elapsed-time switches, also called timer switches, typically fit into or over a standard wall-switch box and allow occupants to turn lights on for a period that is determined either by the occupant or by the installer. Lights go off at the end of that interval unless the cycle has been restarted by the occupant or manually turned off sooner. Time intervals typically range from 10 minutes to 12 hours. Elapsed-time switches are much simpler to specify than occupancy sensors, are less prone to faulty user adjustment, and cost less.

CASE STUDY: Saving Energy with Occupancy Sensors

As part of a lighting upgrade at one of its facilities in Beverly Hills, California, Arden Realty installed a variety of occupancy sensors. These included ceiling sensors in larger areas and wall sensors in smaller offices. The wall sensors used infrared technology and the ceiling sensors used the ultrasonic approach. Savings amounted to an estimated 3,920 kWh/year in lighting electricity use and another 1,253 kWh/year in reduced cooling energy. Energy use at the facility was also cut by more than 140,000 kWh/year by replacing T12 lamps with T8 lamps, retrofitting reflectors in some fixtures, and replacing incandescent bulbs with compact fluorescents. These lighting measures are part of a building upgrade that includes a new energy management system and the use of variable-frequency drives on various pumps and fans. Overall, Arden, the largest landlord of office buildings in Southern California, has performed more than 100 lighting retrofits, covering over 12 million square feet. The efficiency improvements of these lighting upgrades have been a key element for many Arden properties in earning the ENERGY STAR.

Table 6.10: Occupancy sensor applications

When using occupancy sensors, it is essential to place them correctly.

Type of sensor	Applications
Ceiling mount	Open partitioned areas, small open offices, file rooms, copy rooms, conference rooms, restrooms, garages
Corner mount/wide view	Large office spaces, conference rooms
Wall switch	Private offices, copy rooms, closets
Narrow view	Hallways, corridors, aisles
High mount/narrow view	Warehouse aisles

Courtesy: E SOURCE

Elapsed-time switches may be mechanical or electronic. Mechanical units, typically set by the user, are basically spring-wound kitchen timers connected to a relay, and so are subject to mechanical failures if used in high-traffic areas. Time intervals on electronic switches are typically set by the installer using a hidden setscrew. These electronic devices look like conventional toggle switches, so occupants are usually unaware of the presence of the device, which reduces vandalism and theft. Elapsed-time switches are also an easy, economical means of complying with energy codes that call for automatic lighting controls.

Clock switches control lights by turning them on and off at prearranged times, regardless of occupancy. They are most useful in locations where occupancy follows a well-defined pattern, such as a retail outlet. They are typically placed in electric closets that house lighting power panels. These devices cost relatively little to install and can control large loads with a single set of contactors. Equipment may consist of mechanical devices—motors, springs, and relays—or sophisticated electronic systems that handle several schedules simultaneously. Mechanical switches may require correction for daylight savings time or after a power failure unless battery backup is available, but battery backup can triple the device's price. Electronic devices routinely include battery backup and can be easily programmed to adjust for shifts to and from daylight savings time or for holiday schedules.

One thing to note: If a space has fluorescent lighting, make sure that electronic switches do not use a triac relay. Triacs may trickle a small amount of current to ballasts and lamps, even when they are off, which may damage the lamps as well as waste energy.

Energy management systems (EMSs). An EMS performs the same function for lighting as a clock switch, but with more sophistication and additional features. A typical EMS is designed to handle a variety of loads, including HVAC, but pure lighting-management systems are also available. Systems are now becoming available that combine on-off and dimming capabilities in an EMS. A common EMS feature is a sweep mode that automatically cycles lights on or off, one section or floor at a time, signaling occupants that lights will soon be shut off. Occupants can then override the shutdown in their area by pressing a local switch or by phoning in a code to the EMS (see sidebar).

Dimming Controls

Dimming controls are usually used to match lighting levels with human needs and to save energy. When combined with photosensors that measure local light levels, dimming controls can correct for dirt buildup in fixtures and lamp lumen depreciation. Dimming controls are also used to modulate lamp output to account for incoming daylight. Dimming may be accomplished in either a

CASE STUDY: Turning Off Lights with an EMS

A lighting control system linked to an energy management system at a 250,000-square-foot office building in Boston, Massachusetts, produced 112,500 kWh/year in energy savings. Most of the work at the site is done in a single shift, Monday through Friday. An audit at the start of an energy-efficiency upgrade found that the lights were frequently left on in some areas during times when the spaces were unoccupied. Cleaning crews and security guards were supposed to turn off the lights in unoccupied areas, but for various reasons that was often overlooked. Sometimes after-hours or weekend workers would turn on the lights but forget to turn them off when they left. The audit identified the general lighting in the facility as an opportunity for energy savings, but the layout of the facility was not deemed to be conducive to the use of occupancy sensors in all areas. Occupancy sensors were installed in private offices and restrooms, but high partitions and frequent rearranging of the space made them impractical for the large open areas. Instead, an automatic lighting control system was installed as part of a comprehensive EMS being installed at the site.

The building was divided into 47 lighting "zones," and a time schedule was assigned to each zone. New electronic relays were installed on the lighting circuits and tied into the EMS. The system turns the lights on and off at the designated times and allows for overrides when necessary, ensuring that occupants are still in control when they need to be.

At each zone's designated time, all the lights in that zone blink to alert any remaining occupants that all lights will go off in a few minutes. Anyone still working uses a phone to call a designated number (to the EMS computer) to get an additional hour of light. When that hour is up, if no further overrides are requested, the lights go out and stay out until the designated morning "lights on" time. Schedules for each zone can be changed easily if necessary. The system can also be accessed by facility managers from remote locations.

stepped or continuous fashion. Advanced dimming technologies, using individually addressable ballasts and wireless technology, are also available.

Step dimming. Two means of step dimming are available: banks of lamps may be put on different switching circuits or ballasts designed specifically for step dimming may be applied. The first method is often referred to as bilevel switching, even though more than two levels may actually be available. For example, in a system with three-lamp fluorescent fixtures, one switch may operate the center lamp in each fixture, while another operates the outer lamps. This arrangement makes three lighting levels possible (one lamp, two lamps, or three lamps lit), yet the term "bilevel" is still used to describe it.

Step-dimming ballasts offer more light control and energy savings than nondimming ballasts but cost less than the more versatile continuous-dimming ballasts. Step-dimming ballasts typically offer two or three lighting levels, and they can be used with occupancy sensors so that the sensors are able to dim the lamps rather than turn them off, which can reduce on-off cycling and extend lamp life. These units also offer a viable way to reduce lighting levels during noncritical hours and to shed peak demand in common areas such as corridors.

Step-dimming ballasts are especially useful for HID lamps. These lamps typically require long warm-up times, so they are not suited to being switched on and off by occupancy sensors. Better results can be obtained by switching the lamps between low power and full power.

Continuous dimming. Continuous-dimming controls adjust lighting levels over a wide range. They offer more flexibility than step dimming and are used in a wide variety of applications, including mood-setting and daylight dimming.

Fluorescent lamps may be dimmed for two purposes: energy savings and architectural effect. Energy-saving dimmers typically dim down to 20 percent, while architectural dimmers may reduce light levels to 1 percent or less. Dimming ballasts are often used to reduce electric light output whenever daylight is available. Dimming can also be used in load-shedding strategies—better to have employees work briefly under slightly lower light levels than be forced to send them home because of a power failure.

Dimming ballasts use either low-voltage or power-line control. Most ballasts are controlled by a separate, low-voltage circuit. This approach requires additional wiring, but the ballasts are compatible with a wide variety of dimming controls. For example, low-voltage-controlled ballasts can easily be connected to EMSs that offer 0- to 10-volt output channels. Power-line-controlled ballasts can dim fluorescent lamps with standard incandescent wall dimmers installed directly on the line-voltage switch leg—no extra wires necessary. The ballasts are not compatible with all dimmers, however, so ballast and dimmer should be checked for compatibility. Personal dimming controls, which allow individuals to control light levels in their own work areas, are also becoming more widely available. Such dimming controls have been shown to cut energy use and increase worker satisfaction levels.

In recent years, it has become easier to dim compact fluorescent lamps as well as full-size fluorescents. New screw-base, step-dimmable, and continuously dimmable CFLs provide dimming capabilities down to the range of 10 to 20 percent, and these products work well with most existing incandescent dimmers. These lamps cost two to three times more than standard CFLs. New pin-base CFL dimming products are on the market as well, providing opportunities to dim lights to 5 percent of maximum output or even lower levels.

HID dimming is more limited because it is accompanied by color shifting, reduced CRI, increased flicker, adverse impact on lamp life, and inadvertent lamp shutdown during line-voltage variations. New electronic dimming ballasts for metal halide lamps are reducing the severity of some of these effects, making HID dimming more feasible.

Building operators can achieve the highest levels of energy savings through a combination of dimming and on-off strategies. However, the total savings achieved by implementing both strategies will be less than the sum of the savings gained by implementation of each of the strategies alone. The reason for this is simple: Take, for example, a system that combines occupancy sensing and dimming. Dimming cannot save energy when occupancy sensors have already shut off a lamp, and the occupancy sensors save less energy when they turn off lights that otherwise would have been dimmed.

Addressable ballasts. Most dimming is accomplished by controlling banks of dimmable ballasts together. Digitally controlled ballasts that use control protocols such as DALI (digitally addressable lighting interface), LonWorks, BACnet, or other proprietary protocols provide more flexibility. Each ballast is assigned an identifier, or "address," and can be controlled individually or in clusters that can easily be regrouped. With some systems, two-way communications are also possible. This capability not only gives users the ability to tailor local lighting conditions to their individual needs, but may also give energy managers a tool for tracking and controlling energy use and responding to load-shedding signals (see sidebar).

Some protocols, such as DALI, are designed for use over a dedicated low-voltage network, but DALI-to-Ethernet converters are available so that DALI can be used in buildings with existing

CASE STUDY: System Controls and Tracks Lighting Use

A lighting control system based on the digitally addressable lighting interface (DALI) allows the energy manager at the Harvard School of Public Health to control any of the lights in the school's refurbished office space using a personal computer and the Internet. He can pinpoint the location of any failed lamps or ballasts and get up-to-the-minute reports on lighting energy consumption. The system has allowed him to better manage energy use and maintenance while keeping building occupants comfortable. All of the ballasts have been set to operate partially dimmed as the default mode, so if occupants say that they need more light, it takes just a few keystrokes to give it to them without having to add new fixtures. The system can also be used to dim lights in response to load-shedding signals from the local utility.

Ethernet networks without the need to run additional control wires. Some digital ballasts include a built-in DALI interface; others use another proprietary protocol. Conventional low-voltage controlled-dimming ballasts can be added to digital lighting control systems via special interfaces that connect to DALI systems and convert the DALI commands to standard 0- to 10-volt direct-current control signals.

Wireless lighting controls. One of the difficulties that comes up when adding controls as part of a lighting upgrade is the expense of running the wires. One promising solution is wireless lighting controls. A typical wireless lighting control system consists of a set of sensors, actuators, and controllers that communicate via radio waves rather than wires. Although wires are still required for the lighting equipment itself, using radio waves instead of wires to transmit control signals offers a number of potential advantages, both in terms of ease of installation and maintenance and in terms of flexibility. Wireless lighting controls have been available for a number of years, but their use has been limited to a few niche markets such as high-end homes, conference rooms, and classrooms that often need a large variety of lighting scenes. These systems are installed to provide amenities they're not aimed at energy savings and they lack the reliability and flexibility that would be needed in a commercial facility. Newer, more-capable wireless systems, some of which are available today, may broaden the wireless lighting controls market considerably if costs can be brought down. One promising technique uses a concept known as a mesh network, which is a decentralized set of wireless nodes that are linked to one another to form a self-organizing, self-healing network. Control is split up among the different nodes so that there are multiple, redundant paths throughout the network. Each device on the network is designed to transmit over short distances, which reduces power requirements and minimizes the potential for interference. Leading players in the mesh network field are the Zigbee Alliance (www.zigbee.org) and the Z-Wave Alliance (www.z-wavealliance.org/modules/start/).

Commissioning Ensures the Benefits of Lighting Controls

Most lighting controls require commissioning to ensure that they operate as intended and are properly adapted to local conditions. Specific steps depend on the types of controls installed:

- For all systems, verify that sensors are placed according to construction drawings and make adjustments for any unexpected obstructions.
- For daylighting systems, calibrate the system after all furnishings and interior surface finishes are in place. For help in commissioning daylighting systems, Architectural Energy Corp. has

created the Sensor Placement and Orientation Tool. This tool is available free of charge at www.archenergy.com/SPOT/index.html.

- For systems with occupancy sensors, check placement and orientation against construction drawings and adjust the sensitivity and time delay of the sensor.
- For scheduling systems, put in appropriate start and stop times for weekday, weekend, and holiday operation and verify correct operation of overrides.
- For manual dimming, check that the dimmer is installed as specified and that the upper limits set are appropriate for the tasks being performed and the lower limits set do not cause the lamps to flicker.

In addition, to decrease the chances that occupants will sabotage the controls, occupants and maintenance personnel should be informed about the benefits of the systems and, where possible, involved in the design process. They should also be informed about how the controls work and trained in the use of the override controls so that they can use them when needed and not be tempted to override permanently. All control systems also need periodic maintenance to ensure that they continue to work properly.

6.8 Build In an Operations and Maintenance Plan

A lighting upgrade can cut energy bills, improve the look of a facility, and boost employee morale, but all those benefits can fade away if the new lighting systems are not well maintained. All lighting systems experience a decrease in light output and efficiency over time, because:

- Lamp light output decreases (lamp lumen depreciation) (**Figure 6.9**).
- Dirt accumulates on fixtures (luminaire dirt depreciation). The IESNA issued new guidelines in late 2003 for estimating the effect of dirt accumulation on luminaires. The document,

Figure 6.9: Typical lamp lumen depreciation curves

The slower rate of lumen depreciation of some lamps compared to others can translate to lower installed wattage for an equal amount of maintained foot-candles.

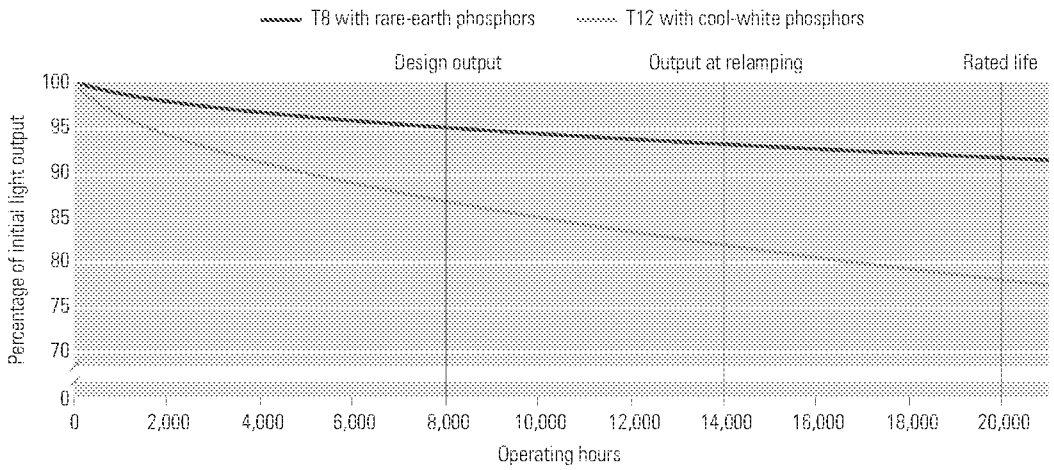

Courtesy: *E SOURCE Lighting Technology Atlas* (2005); data from Philips Lighting Co.

"IESNA/NALMCO RP-36-03," may be purchased from http://webstore.ansi.org/ansidocstore/product.asp?sku=IESNA%2FNALMCO+RP-36-03.

- Lamps burn out.
- Control systems drift out of spec or are overridden by occupants.

For maximum effectiveness, maintenance should be addressed right from the start of the design process in the following ways.

- *Design lighting systems with components that minimize light loss over time, are easy to maintain, and use the fewest types of lamps.* The process begins with the choice of lamp. To account for lighting-system degradation, designers typically oversize initial light output by 35 percent or more to "maintain" minimum target illumination levels when lamps are changed and fixtures cleaned. Proper design and maintenance—using high-quality lighting components that suffer less degradation or degrade more slowly—can cut that excess nearly in half, saving almost 15 percent in connected load. Minimizing that 35 percent safety factor involves choosing lamps with minimum lumen depreciation. Maintenance costs can be further minimized by limiting the number of different types of lamps that must be stocked and by choosing lamps with maximum rated life to reduce burnout rate.
- *Train personnel in proper maintenance techniques, including cleaning and relamping.* Knowledge of the equipment; an understanding of the procedures; and an appreciation for the relative costs of energy, labor, and lamps are essential parts of instruction. Annual retraining is also necessary to remind staff of proper procedure and to account for changes in equipment and staff turnover. Retraining is especially important immediately after a lighting upgrade. Such training should include hands-on work with new devices and a quiz to indicate which employees may need further technical education. A variety of training and certification programs are offered by national organizations for the design and maintenance of efficient lighting systems (see sidebar). Many utilities also sponsor local training programs. Hiring a lighting-management company may simplify maintenance. Using an outside firm can eliminate the need to train employees in lamp maintenance practices and cut the necessity of maintaining large stocks of extra lamps. In addition, a firm familiar with new technologies can help a facility take advantage of the latest lighting-system improvements.
- *Control purchasing and inventory to ensure that only the right replacement components are available.* If the right ballast or lamp is not immediately available when an occupant complains about a burnout, the need to provide a quick replacement will almost guarantee that the wrong type is installed instead. Maintaining proper purchasing specifications and inventory eliminates the possibility of using the wrong equipment.

Plan for Group Relamping

In many cases, the most cost-effective way to maintain a lighting system is a planned program of group relamping, in which all lamps are replaced in the same operation. This practice is in contrast to spot relamping, in which lamps are replaced only when they burn out.

- On a per-lamp basis, group relamping requires much less labor than spot relamping because the maintenance workers have all the required materials on hand and can move systematically from one fixture to the next. In addition, group relamping is normally done outside working hours, which reduces disruption of normal activities.
- It is an easy task to schedule and to delegate to outside contractors who have special equipment and training.

- Group relamping provides brighter and more-uniform lighting because it gets rid of lamps before they are at the end of their lumen depreciation curve.
- It offers increased control over the replacement lamps, reducing the probability of mixing incompatible lamps, such as those with different color temperatures.
- Other maintenance activities can be combined with group relamping, such as ballast and reflector inspection and lens cleaning. It also provides an opportunity for retrofitting reflectors, lamps, ballasts, or lenses as necessary.

RESOURCES: Training and Certification Programs

A number of organizations offer training and certification programs for the design and maintenance of energy-efficient lighting systems.

Association of Energy Engineers (AEE)
Contact Leslie Walcker, CLEP Certification Administrator
Atlanta, Georgia
Tel 770-447-5093 ext 223
E-mail leslie@aeecenter.org
Web www.aeecenter.org/certification/clep

The AEE Certified Lighting Efficiency Professional (CLEP) program includes a two-day seminar and a four-hour exam oriented toward design and specification of energy-efficient lighting systems.

The InterNational Association of Lighting Management Companies (NALMCO)
Des Moines, Iowa
Tel 515-243-2360
Fax 515-243-2049
E-mail director@nalmco.org
Web www.nalmco.org/

The NALMCO Certified Lighting Management Consultant program is a preparatory course and one-day test focusing on lighting systems specification and management.

National Council on Qualifications for the Lighting Professions (NCQLP)
Alexandria, Virginia
Tel 703-518-4370
Fax 703-706-9583
Web www.ncqlp.org

The NCQLP Lighting Certification program consists of a four-hour exam that focuses on overall lighting knowledge as well as information-gathering and decision-making skills.

Other Certifying Agencies
Contact information by state can be found at www.boccentral.org.

Various energy-efficiency groups around the country, such as the Midwest Energy Efficiency Alliance (MEEA) and Northeast Energy Efficiency Partnerships (NEEP), offer Building Operator Certification programs. Certification requires 56 hours of classroom training and approximately 16 hours of projects that encompass a wide variety of building elements, including energy-efficient lighting practices.

Group relamping is normally done at about 60 to 80 percent of rated lamp life, depending on variables such as labor costs, requirements for fixture cleaning, and the cost and mortality curves of the lamps.

Economic comparisons typically show that group relamping has higher lamp costs but lower labor costs than spot relamping. One such comparison shows a substantial overall savings from group relamping (**Table 6.11**).

Retrocommission Lighting Controls

All lighting control systems need to go through periodic retrocommissioning where they are checked to ensure that they continue to work as expected—occupancy sensors may become obstructed by a new furniture arrangement, light sensors may require adjustment if interior surfaces are changed to materials with new reflectance values, or a new building may go up next door that changes incoming daylight patterns. Maintenance personnel should inspect the lighting controls at least annually to verify proper operation. Photoelectric controls need occasional cleaning of the photosensitive surface.

Scheduling controls that use relays need to be checked periodically to ensure that they are not permanently overridden. In cases where an override is found, determine the cause before simply clearing the override setting—the override may have been an attempt to solve a problem that has not yet been fixed.

Develop an O&M Manual

To deal with these factors and sustain an efficient, high-performance lighting upgrade, assemble an operations and maintenance (O&M) manual. Use it as both the lighting-management policy and a central operating reference for building-management and maintenance staff. This manual should include the following information:

- Facility blueprints.
- Fixture and controls schedule.
- Equipment specifications, including product cut sheets.
- Equipment and service provider sources and contacts (include utility contacts).

Table 6.11: Economics of group versus spot relamping

Group relamping has higher lamp costs but much lower labor costs, providing, in this case, a 43 percent overall savings. Group relamping also provides additional benefits in lighting quality and facility management.

	Relamp cycle (hours)	Average lamps replaced per year	Average material cost per year	Average labor cost per year	Total average cost per year
Spot relamping on burnout[a]	20,000	525	$945	$3,938	$4,883
Group relamping at 70 percent of rated life[b]	14,000	750	$1,350	$1,425	$2,775
Difference	6,000	225	$405	-$2,513	-$2,108

Notes: a. Assumes labor costs of $7.50 for relamping and cleaning, material cost of $1.80 per lamp, and 3,500 hours per year operation.
b. Assumes labor costs of $1.90 for relamping and cleaning, material cost of $1.80 per lamp, and 3,500 hours per year operation.

Courtesy: *E SOURCE Lighting Technology Atlas* (2005)

- Fixture cleaning and relamping schedule with service tracking log.
- Procedures for relamping, reballasting, and cleaning fixtures.
- Procedures for the adjustment of photosensors and occupancy sensors.
- Procedures for proper lamp and ballast disposal.

Review the O&M manual with the staff responsible for lighting maintenance. Make training mandatory for all new maintenance personnel. Correct operation and maintenance should be built into job descriptions and should become part of all annual performance reviews.

Dispose of Lamps Properly

A lighting upgrade will most likely require the removal and disposal of lamps and ballasts. Group relamping every several years and occasional spot relamping as necessary will also create additional lamp waste. Some of this waste may be hazardous and must be managed according to applicable federal, state, and local requirements (see sidebar).

Many lamps contain mercury and are therefore considered hazardous waste under the Resource Conservation and Recovery Act (RCRA), including fluorescent, HID, neon, mercury vapor, HPS, and metal halide lamps. Visit the EPA's RCRA web site at www.epa.gov/rcraonline for more details. To help deal with the problem of lamp disposal, the EPA initiated an outreach program in 2002 to promote the recycling of mercury lamps by commercial and industrial end users. The outreach program aims to increase awareness of the proper disposal methods of these lamps in compliance with federal and state universal waste rules. The National Electrical Manufacturers Association (NEMA) supports the program and offers information on a web site designed specifically to address lamp recycling issues (www.lamprecycle.org).

RESOURCES: Disposal Contact and Resource Information

Lighting upgrades and ongoing maintenance will require the disposal of lamps and ballasts. Here are some sources of information on the proper disposal of these items, which may contain hazardous materials.

Resource Conservation and Recovery Act (RCRA)
Hotline 800-424-9346 (Washington, D.C., metro area: 703-412-9810)
Web www.epa.gov/rcraonline

RCRA provides information on disposal of lamps that contain hazardous materials.

National Electrical Manufacturers Association (NEMA)
Web www.lamprecycle.org

NEMA maintains a web site with guidelines and detailed information on lamp recycling.

Toxic Substances Control Act (TSCA)
Hotline 202-554-1401
E-mail tsca-hotline@epa.gov
Web www.epa.gov/pcb

The TSCA provides regulations and guidelines for disposal of ballasts that contain polychlorinated biphenyls (PCBs).

For ballasts, the proper method of disposal depends on the type and condition of the ballasts. Generally, ballasts manufactured after 1978 contain the statement "No PCBs," meaning they have not been found to contain polychlorinated biphenyls (PCBs). The disposal of PCBs is regulated under the Toxic Substances Control Act (TSCA). Other factors controlling the disposal of ballasts will depend on the regulations and recommendations in effect in the state in which they are removed or discarded. Because disposal requirements vary from state to state, check with regional, state, or local authorities for all applicable regulations.

The costs of handling and disposal of lamps and ballasts vary, but the expense is rarely a deal-breaker in a lighting upgrade. Typically, disposal costs constitute a very small percentage of the overall life-cycle costs of operating a lighting system. Investigate and budget for these disposal costs, both as a first cost during the upgrade and as an ongoing O&M expense.

6.9 Summary

This chapter on the lighting stage of a building system upgrade has described opportunities for improving a building's lighting system in a cost-effective manner. To ensure a successful upgrade, keep the following strategies in mind:

- Design light (quantity and quality) that is tailored to task and occupant needs.
- Specify equipment that maximizes system efficiency, not just component efficiency.
- Use automatic controls to turn lights off or down when not needed.
- Establish ongoing monitoring, maintenance, and disposal practices.

Bibliography

American Society of Heating, Refrigerating and Air-Conditioning Engineers Inc. (ASHRAE), "Energy Standard for Buildings Except Low-Rise Residential Buildings," ANSI/ASHRAE/IESNA Standard 90.1-2004, 404-636-8400, www.ashrae.org.

California Energy Commission, "Guide Illuminates Modular Skylight Well Design," Public Interest Energy Research Buildings Program Technical Brief, CEC-500-2005-045-FS (2005), www.esource.com/public/pdf/cec/CEC-TB-3.pdf.

Consortium for Energy Efficiency, "High-Performance T8 Specification" (March 2006), www.cee1.org/com/com-lt/com-lt-specs.pdf.

EERE, *2005 Buildings Energy Data Book* (U.S. Department of Energy, 2005).

Illuminating Engineering Society of North America (IESNA), "Recommended Practice for Planned Indoor Lighting Maintenance," IESNA/NALMCO RP-36-03 (2003).

Lawrence Berkeley National Laboratory (LBNL), *Interactions Between Lighting and Space Conditioning Energy Use in U.S. Commercial Buildings*, LBNL 39795 (April 1998), http://enduse.lbl.gov/info/LBNL-39795.pdf.

Lighting Research Center, Rensselaer Polytechnic Institute, "National Lighting Product Information Program," www.lrc.rpi.edu/programs/NLPIP/index.asp (accessed October 2006).

Light Right Consortium, "Lighting Quality & Office Worker Productivity," brochure (November 2003).

Navigant Consulting Inc., "U.S. Lighting Market Characterization, Volume 1: National Lighting Inventory and Energy Consumption Estimate, Final Report" (September 2002), prepared for the U.S. Department of Energy's Office of Energy Efficiency and Renewable Energy (EERE) Building Technologies Program, www.eere.energy.gov/buildings/info/documents/pdfs/lmc_vol1_final.pdf.

New Buildings Institute Inc., "Advanced Lighting Guidelines: 2003 Edition" (2003), www.newbuildings.org/lighting.htm.

Rea, Mark S., ed., *IESNA Lighting Handbook,* 9th edition (IESNA, 2000).

Roberts, Victor, and Ira Krepchin, *E Source Technology Atlas Series, Volume I: Lighting* (E SOURCE, 2005).

U.S. Environmental Protection Agency, "Guidelines for Energy Management Overview," www.energystar.gov/index.cfm?c=guidelines.guidelines_index (accessed October 2006).

UNITED STATES PATENT AND TRADEMARK OFFICE

UNITED STATES DEPARTMENT OF COMMERCE
United States Patent and Trademark Office
Address: COMMISSIONER FOR PATENTS
P.O. Box 1450
Alexandria, Virginia 22313-1450
www.uspto.gov

APPLICATION NO.	FILING DATE	FIRST NAMED INVENTOR	ATTORNEY DOCKET NO.	CONFIRMATION NO.
13/029,032	02/16/2011	Eric Bretschneider	39358-701.202	9881

21971 7590 05/16/2011
WILSON, SONSINI, GOODRICH & ROSATI
650 PAGE MILL ROAD
PALO ALTO, CA 94304-1050

EXAMINER

ART UNIT	PAPER NUMBER
2875	

MAIL DATE	DELIVERY MODE
05/16/2011	PAPER

Please find below and/or attached an Office communication concerning this application or proceeding.

The time period for reply, if any, is set in the attached communication.

UNITED STATES PATENT AND TRADEMARK OFFICE

Commissioner for Patents
United States Patent and Trademark Office
P.O. Box 1450
Alexandria, VA 22313-1450
www.uspto.gov

WILSON, SONSINI, GOODRICH & ROSATI
650 PAGE MILL ROAD
PALO ALTO CA 94304-1050

In re Application of	:	
BRETSCHNEIDER et al.	:	DECISION ON PETITION
Application No. 13/029,032	:	TO MAKE SPECIAL UNDER
Filed: February 16, 2011	:	THE GREEN TECHNOLOGY
Attorney Docket No. 39358-701.202	:	PILOT PROGRAM

This is a decision on the petition under 37 CFR 1.102, filed on March 29, 2011, to make the above-identified application special under the pilot program for applications pertaining to Green Technologies as set forth 74 Federal Register Notice 64666 (December 8, 2009) and amended by 75 Federal Register Notice 28554 (May 21, 2010) and 75 Federal Register Notice 69049 (November 10, 2010).

The petition is **GRANTED**.

A grantable petition to make an application special under 37 CFR 1.102 and the pilot program as set forth in 74 FR 64666 must be directed to a nonprovisional application filed under 35 USC 111(a) or be a national stage entry under 35 USC 371, exclusive of any reissue applications.

In order to qualify for special status, the following requirements must be met. 1) The application must have no more than 3 independent claims and no more than 20 total claims. 2) The application must not contain any multiple dependent claims. 3) The petition must state the basis for seeking special status, i.e., the claimed invention either: A) materially enhances the quality of the environment or B) materially contributes to: i) the discovery or development of renewable energy resources, ii) the more efficient utilization and conservation of energy resources, or iii) greenhouse gas emission reduction. 4) If the disclosure is not clear on its face that the claimed invention materially contributes under category (A) or (B), the petition must be accompanied by a statement by the applicant, assignee, or an attorney/agent registered to practice before the Office explaining how the materiality standard is met. 5) A statement that applicant will agree to make an election without traverse in a telephonic interview if a restriction requirement is made by the examiner. 6) The petition to make special must be filed electronically. 7) The petition must be filed at least one day prior to the date that a first Office Action appears in the Patent Application Information Retrieval (PAIR) system. 8) The petition must be accompanied by a request for early publication in compliance with 37 CFR 1.219 and include the publication fee as set forth in 37 CFR 1.18(d).

The requirement for a fee for consideration of the petition to make special for applications pertaining to Green Technologies has been waived.

The instant petition complies with items 1 – 8 above. Accordingly, the above-identified application has been accorded "special" status.

Telephone inquires concerning this decision should be directed to Lee W. Young at 571-272-4549.

The application is being forwarded to the Technology Center Art Unit 2875 for action on the merits commensurate with this decision.

Lee W. Young
Quality Assurance Specialist
Technology Center 2800

UNITED STATES PATENT AND TRADEMARK OFFICE

Commissioner for Patents
United States Patent and Trademark Office
P.O. Box 1450
Alexandria, VA 22313-1450
www.uspto.gov

In re Application of
Andrew F. Fanton

Application No. 13029119

Filed:

Attorney Docket No. FORT-007514

:DECISION ON PETITION TO MAKE SPECIAL
:UNDER 37 CFR 1.102(c)(1)

This is a decision on the electronic petition under 37 CFR 1.102 (c)(1), filed 17-FEB-2011 to make the above-identified application special based on applicant's age as set forth in MPEP § 708.02, Section IV.

The petition is **GRANTED**.

A grantable petition to make an application special under 37 CFR 1.102(c)(1), MPEP § 708.02, Section IV: Applicant's Age must include a statement by applicant or a registered practitioner having evidence that applicant is at least 65 years of age. No fee is required.

Accordingly, the above-identified application has been accorded "special" status and will be taken up for action by the examiner upon the completion of all pre-examination processing.

Telephone inquiries concerning this electronic decision should be directed to the Electronic Business Center at 866-217-9197.

All other inquiries concerning either the examination or status of the application should be directed to the Technology Center.

Doc Code: PET.GREEN
Document Description: Petition for Green Tech Pilot

PTO/SB/420 (11-10)
Approved for use through 01/31/2011. OMB 0651-0062
U.S. Patent and Trademark Office; U. S. DEPARTMENT OF COMMERCE
Under the Paperwork Reduction Act of 1995, no persons are required to respond to a collection of information unless it displays a valid OMB control number.

PETITION TO MAKE SPECIAL UNDER THE GREEN TECHNOLOGY PILOT PROGRAM

Attorney Docket Number: PDTC:004004	Application Number (if known): 13/029,200	Filing date: 02/17/2011
First Named Inventor: Stefan Stamoulis		
Title: TOOL AND METHOD FOR EXTRACTING LANDFILL GAS		

APPLICANT HEREBY REQUESTS TO PARTICIPATE IN THE GREEN TECHNOLOGY PILOT PROGRAM FOR THE ABOVE-IDENTIFIED APPLICATION. See Instruction Sheet on page 2.

This petition must be timely filed electronically using the USPTO electronic filing system, EFS-Web.

1. By filing this petition:

   Applicant is requesting early publication: Applicant hereby requests early publication under 37 CFR 1.219 and the publication fee set forth in 37 CFR 1.18(d) accompanies this request.

2. By filing this petition: applicant is agreeing to make an election without traverse in a telephonic interview and elect an invention that meets the eligibility requirements for the Green Technology Pilot Program, if the Office determines that the claims are not obviously directed to a single invention. See Instruction Sheet.

3. This request is accompanied by statements of special status for the eligibility requirement.

4. The application contains no more than three (3) independent claims and twenty (20) total claims.

5. The application does not contain any multiple dependent claims.

6. Other attachments: _____

Signature /Margaret A. Boulware/	Date 03/18/2011
Name (Print/Typed) Margaret A. Boulware	Registration Number 28708

Note: *Signatures of all the inventors or assignees of record of the entire interest or their representative(s) are required in accordance with 37 CFR 1.33 and 11.18. Please see 37 CFR 1.4(d) for the form of the signature. If necessary, submit multiple forms for more than one signature see below*.*

☐ *Total of ..... forms are submitted.

The information is required to obtain or retain a benefit by the public which is to file (and by the USPTO to process) an application. Confidentiality is governed by 35 U.S.C. 122 and 37 CFR 1.11 and 1.14. This collection is estimated to take 12 hours to complete, including gathering, preparing, and submitting the completed application form to the USPTO. Time will vary depending upon the individual case. Any comments on the amount of time you require to complete this form and/or suggestions for reducing this burden, should be sent to the Chief Information Officer, U.S. Patent and Trademark Office, U.S. Department of Commerce, P.O. Box 1450, Alexandria, VA 22313-1450. DO NOT SEND FEES OR COMPLETED FORMS TO THIS ADDRESS. **SEND TO: Commissioner for Patents, P.O. Box 1450, Alexandria, VA 22313-1450.**

If you need assistance in completing the form, call 1-800-PTO-9199 and select option 2.

Under the Paperwork Reduction Act of 1995, no persons are required to respond to a collection of information unless it displays a valid OMB control number.

Instruction Sheet for Petition to Make Special Under the Green Technology Pilot Program

(Not to be Submitted to the USPTO)

The following is a summary of the requirements (for more information see the notices (i) "Pilot Program for Green Technologies Including Greenhouse Gas Reduction," (ii) "Elimination of Classification Requirement in the Green Technology Pilot Program," and (iii) "Expansion and Extension of the Green Technology Pilot Program," available on the USPTO web site at http://www.uspto.gov/patents/init_events/green_tech.jsp):

1) The application must be a non-reissue, non-provisional utility application filed under 35 U.S.C. 111 (a), or an international application that has entered the national stage in compliance with 35 U.S.C. 371, irrespective of the filing date of the application. Reexamination proceedings are excluded from this pilot program.

2) The application must contain three or fewer independent claims and twenty or fewer total claims. The application must not contain any multiple dependent claims. For an application that contains more than three independent claims or twenty total claims, or multiple dependent claims, applicant must file a preliminary amendment in compliance with 37 CFR 1.121 to cancel the excess claims and/or the multiple dependent claims at the time the petition to make special is filed.

3) The claims must be directed to a single invention that materially enhances the quality of the environment, or that materially contributes to: (1) the discovery or development of renewable energy resources; (2) the more efficient utilization and conservation of energy resources; or (3) green house gas emission reduction (see the eligibility requirements of sections II and III of the notice (i) cited above). The petition must include a statement that, if the USPTO determines that the claims are directed to multiple inventions (e.g., in a restriction requirement), applicant will agree to make an election without traverse in a telephonic interview, and elect an invention that meets the eligibility requirements in section II or III of the notice (i) cited above.

4) The petition to make special must be timely filed electronically using the USPTO electronic filing system, EFS-Web, and selecting the document description of "Petition for Green Tech Pilot" on the EFS-Web screen. Applicant should use form PTO/SB/420, which is available as a Portable Document Format (PDF) fillable form in EFS-Web and on the USPTO Web site.

5) The petition to make special must be filed at least one day prior to the date that a first Office action (which may be an Office action containing only a restriction requirement) appears in the Patent Application Information Retrieval (PAIR) system. Applicant may check the status of the application using PAIR.

6) The petition to make special must be accompanied by a request for early publication in compliance with 37 CFR 1.219 and the publication fee set forth in 37 CFR 1.18(d).

Privacy Act Statement

The **Privacy Act of 1974 (P.L. 93-579)** requires that you be given certain information in connection with your submission of the attached form related to a patent application or patent. Accordingly, pursuant to the requirements of the Act, please be advised that: (1) the general authority for the collection of this information is 35 U.S.C. 2(b)(2); (2) furnishing of the information solicited is voluntary; and (3) the principal purpose for which the information is used by the U.S. Patent and Trademark Office is to process and/or examine your submission related to a patent application or patent. If you do not furnish the requested information, the U.S. Patent and Trademark Office may not be able to process and/or examine your submission, which may result in termination of proceedings or abandonment of the application or expiration of the patent.

The information provided by you in this form will be subject to the following routine uses:

1. The information on this form will be treated confidentially to the extent allowed under the Freedom of Information Act (5 U.S.C. 552) and the Privacy Act (5 U.S.C 552a). Records from this system of records may be disclosed to the Department of Justice to determine whether disclosure of these records is required by the Freedom of Information Act.
2. A record from this system of records may be disclosed, as a routine use, in the course of presenting evidence to a court, magistrate, or administrative tribunal, including disclosures to opposing counsel in the course of settlement negotiations.
3. A record in this system of records may be disclosed, as a routine use, to a Member of Congress submitting a request involving an individual, to whom the record pertains, when the individual has requested assistance from the Member with respect to the subject matter of the record.
4. A record in this system of records may be disclosed, as a routine use, to a contractor of the Agency having need for the information in order to perform a contract. Recipients of information shall be required to comply with the requirements of the Privacy Act of 1974, as amended, pursuant to 5 U.S.C. 552a(m).
5. A record related to an International Application filed under the Patent Cooperation Treaty in this system of records may be disclosed, as a routine use, to the International Bureau of the World Intellectual Property Organization, pursuant to the Patent Cooperation Treaty.
6. A record in this system of records may be disclosed, as a routine use, to another federal agency for purposes of National Security review (35 U.S.C. 181) and for review pursuant to the Atomic Energy Act (42 U.S.C. 218(c)).
7. A record from this system of records may be disclosed, as a routine use, to the Administrator, General Services, or his/her designee, during an inspection of records conducted by GSA as part of that agency's responsibility to recommend improvements in records management practices and programs, under authority of 44 U.S.C. 2904 and 2906. Such disclosure shall be made in accordance with the GSA regulations governing inspection of records for this purpose, and any other relevant (*i.e.*, GSA or Commerce) directive. Such disclosure shall not be used to make determinations about individuals.
8. A record from this system of records may be disclosed, as a routine use, to the public after either publication of the application pursuant to 35 U.S.C. 122(b) or issuance of a patent pursuant to 35 U.S.C. 151. Further, a record may be disclosed, subject to the limitations of 37 CFR 1.14, as a routine use, to the public if the record was filed in an application which became abandoned or in which the proceedings were terminated and which application is referenced by either a published application, an application open to public inspection or an issued patent.
9. A record from this system of records may be disclosed, as a routine use, to a Federal, State, or local law enforcement agency, if the USPTO becomes aware of a violation or potential violation of law or regulation.

UNITED STATES PATENT AND TRADEMARK OFFICE

UNITED STATES DEPARTMENT OF COMMERCE
United States Patent and Trademark Office
Address: COMMISSIONER FOR PATENTS
P.O. Box 1450
Alexandria, Virginia 22313-1450
www.uspto.gov

APPLICATION NO.	FILING DATE	FIRST NAMED INVENTOR	ATTORNEY DOCKET NO.	CONFIRMATION NO.
13/029,200	02/17/2011	Stefan STAMOULIS	PDTC004004	1285

11132 7590 05/17/2011
Boulware & Valoir
Three Riverway, Suite 950
Houston, TX 77056

EXAMINER

ART UNIT	PAPER NUMBER
3672	

MAIL DATE	DELIVERY MODE
05/17/2011	PAPER

Please find below and/or attached an Office communication concerning this application or proceeding.

The time period for reply, if any, is set in the attached communication.

UNITED STATES PATENT AND TRADEMARK OFFICE

Commissioner for Patents
United States Patent and Trademark Office
P.O. Box 1450
Alexandria, VA 22313-1450
www.uspto.gov

MAY 17 2011

Boulware & Valoir
Three Riverway, Suite 950
Houston TX 77056

In re Application of	:	
STEFAN STAMOULIS	:	DECISION ON PETITION
Application No. 13/029,200	:	TO MAKE SPECIAL UNDER
Filed: February 17, 2011	:	THE GREEN TECHNOLOGY
Attorney Docket No. PDTC004004	:	PILOT PROGRAM

This is a decision on the petition under 37 CFR 1.102, filed March 18, 2011, to make the above-identified application special under the pilot program for applications pertaining to Green Technologies as set forth in 74 Federal Register Notice 64666 (December 8, 2009) and amended by 75 Federal Register Notice 28554 (May 21, 2010) and 75 Federal Register Notice 69049 (November 10, 2010).

The petition is **GRANTED**.

A grantable petition to make an application special under 37 CFR 1.102 and the pilot program as set forth in 74 FR 64666 must be directed to a nonprovisional application filed under 35 USC 111(a) or be a national stage entry under 35 USC 371, exclusive of any reissue applications.

In order to qualify for special status, the following requirements must be met. 1) The application must have no more than 3 independent claims and no more than 20 total claims. 2) The application must not contain any multiple dependent claims. 3) The petition must state the basis for seeking special status, i.e., the claimed invention either: A) materially enhances the quality of the environment or B) materially contributes to: i) the discovery or development of renewable energy resources, ii) the more efficient utilization and conservation of energy resources, or iii) greenhouse gas emission reduction. 4) If the disclosure is not clear on its face that the claimed invention materially contributes under category (A) or (B), the petition must be accompanied by a statement by the applicant, assignee, or an attorney/agent registered to practice before the Office explaining how the materiality standard is met. 5) A statement that applicant will agree to make an election without traverse in a telephonic interview if a restriction requirement is made by the examiner. 6) The petition to make special must be filed electronically. 7) The petition must be filed at least one day prior to the date that a first Office Action appears in the Patent Application Information Retrieval (PAIR) system. 8) The petition must be accompanied by a request for early publication in compliance with 37 CFR 1.219 and include the publication fee as set forth in 37 CFR 1.18(d).

The requirement for a fee for consideration of the petition to make special for applications pertaining to Green Technologies has been waived.

The instant petition complies with items 1 – 8 above. Accordingly, the above-identified application has been accorded "special" status.

Telephone inquires concerning this decision should be directed to Lanna Mai at 571-272-6867.

The application is being forwarded to the Technology Center Art Unit 3672 for action on the merits commensurate with this decision.

/Lanna Mai/

Lanna Mai
Quality Assurance Specialist
Technology Center 3600

UNITED STATES PATENT AND TRADEMARK OFFICE

Commissioner for Patents
United States Patent and Trademark Office
P.O. Box 1450
Alexandria, VA 22313-1450
www.uspto.gov

MAILED
SEP 13 2011
OFFICE OF PETITIONS

BLANK ROME LLP (NY)
C/O BLANK ROME LLP
ATTN: PATENT DOCKETING
600 NEW HAMPSHIRE AVENUE, NW
WASHINGTON DC 20037

In re Application of	:
Skak et al.	:
Application No. 13/029,304	: DECISION ON PETITIONS
Filed: 02/17/2001	: UNDER 37 CFR 1.78(a)(3) AND (a)(6)
Application No. 134391.00137	:

This is a decision on the petition, filed on June 30, 2011, which is treated as a petition filed under 37 CFR §§ 1.78(a)(3) and 1.78(a)(6), to accept an unintentionally delayed claim under 35 U.S.C. §§365(c), 120, and 119(e) for the benefit of the prior-filed applications set forth in the concurrently filed amendment.

The petition is **DISMISSED.**

A petition for acceptance of a claim for late priority under 37 CFR §§ 1.78(a)(3) and 1.78(a)(6) is only applicable to those applications filed on or after November 29, 2000. Further, the petition is appropriate only after the expiration of the period specified in 37 CFR §§ 1.78(a)(2)(ii) and 1.78(a)(5)(ii). In addition, the petition under 37 CFR §§ 1.78(a)(3) and 1.78(a)(6) must be accompanied by:

(1) the reference required by 35 U.S.C. §§ 365(c), 120, and 119(e) and 37 CFR §§ 1.78(a)(2)(i) and 1.78(a)(5)(i) of the prior-filed applications, unless previously submitted;
(2) the surcharge set forth in § 1.17(t); and
(3) a statement that the entire delay between the date the claim was due under 37 CFR §§ 1.78(a)(2)(ii) and 1.78(a)(5)(ii) and the date the claim was filed was unintentional. The Director may require additional information where there is a question whether the delay was unintentional.

Additionally, the instant nonprovisional application must be pending at the time of filing of the reference to the prior-filed provisional application as required by 37 CFR 1.78(a)(5)(ii). Further,

the international application claiming the benefit of the prior-filed provisional application must have been filed within twelve months of the filing date of the prior-filed provisional application.

The petition is dismissed because of a lack of at least one common inventor between the prior-filed applications and the subject applications. 37 CFR 1.78(a)(1) states that in order for an application to claim the benefit of a prior-filed copending nonprovisional application or international application designating the United States of America, each prior-filed application must name as an inventor at least one inventor named in the later-filed application and disclose the named inventor's invention claimed in at least one claim of the later-filed application in the manner provided by the first paragraph of 35 U.S.C. 112.

The subject application, No. 13/029,304, names Nikolaj Skak and Liselotte Hansen as the inventive entity. The prior-filed nonprovisional application to which petitioners assert a claim of benefit, No. 12/499,034, however, lists Robert D. Gordon, Per Holm, Anne-Marie Lademann, and Tomas Norling as the inventive entity.

Likewise, 37 CFR 1.78(a)(4) states that in order for an application to claim the benefit of one or more prior-filed provisional applications, each prior-filed provisional application must name as an inventor at least one inventor named in the later-filed application and disclose the named inventor's invention claimed in at least one claim of the later-filed application in the manner provided by the first paragraph of 35 U.S.C. 112.

In this regard, the prior-filed provisional application to which petitioners assert a claim of benefit, No. 61/079,015, lists Per Holm and Anne-Marie Lademann as the inventive entity.

As the prior-filed provisional and nonprovisional applications do not name as an inventor at least one inventor named in the later filed application, the requirements of 37 CFR 1.78(a)(3) and (a)(6) have not been met, and the petition must be dismissed.

Further correspondence with respect to this matter should be addressed as follows:

By mail: Mail Stop PETITIONS
Commissioner for Patents
Post Office Box 1450
Alexandria, VA 22313-1450

By hand: Customer Service Window
Mail Stop Petitions
Randolph Building
401 Dulany Street
Alexandria, VA 22314

By fax: (571) 273-8300
ATTN: Office of Petitions

A reply may also be filed via the EFS-Web filing system of the USPTO.

The address in the petition is different than the correspondence address. A courtesy copy of this decision will be mailed to the address in the petition. All future correspondence, however, will be mailed solely to the address of record. A change of correspondence address should be filed if the correspondence address needs to be updated.

Any questions concerning this matter may be directed to Senior Petitions Attorney Douglas I. Wood at 571-272-3231.

Boris Milef
Legal Examiner
PCT Legal Administration

Cc: BLANK ROME LLP
THE CHRYSLER BLDG.
405 LEXINGTON AV.
NEW YORK NY 10174-0208

Doc Code: PET.GREEN
Document Description: Petition for Green Tech Pilot

PTO/SB/420 (11-10)
Approved for use through 01/31/2011. OMB 0651-0062
U.S. Patent and Trademark Office; U. S. DEPARTMENT OF COMMERCE
Under the Paperwork Reduction Act of 1995, no persons are required to respond to a collection of information unless it displays a valid OMB control number.

PETITION TO MAKE SPECIAL UNDER THE GREEN TECHNOLOGY PILOT PROGRAM

Attorney Docket Number: 83169190	Application Number (if known): 13/029,445	Filing date: February 17, 2011
First Named Inventor: Hai Yu et al.		
Title: Engine Power Elevation and Active Battery Charge Energy Management Strategies for Plug-In Hybrid Electric Vehicles		

APPLICANT HEREBY REQUESTS TO PARTICIPATE IN THE GREEN TECHNOLOGY PILOT PROGRAM FOR THE ABOVE-IDENTIFIED APPLICATION. See Instruction Sheet on page 2.

This petition must be timely filed electronically using the USPTO electronic filing system, EFS-Web.

1. By filing this petition:

   Applicant is requesting early publication: Applicant hereby requests early publication under 37 CFR 1.219 and the publication fee set forth in 37 CFR 1.18(d) accompanies this request.

2. By filing this petition: applicant is agreeing to make an election without traverse in a telephonic interview and elect an invention that meets the eligibility requirements for the Green Technology Pilot Program, if the Office determines that the claims are not obviously directed to a single invention. See Instruction Sheet.

3. This request is accompanied by statements of special status for the eligibility requirement.

4. The application contains no more than three (3) independent claims and twenty (20) total claims.

5. The application does not contain any multiple dependent claims.

6. Other attachments: _____

Signature /James N. Kallis/	Date March 24, 2011
Name (Print/Typed) James N. Kallis	Registration Number 41,102

Note: *Signatures of all the inventors or assignees of record of the entire interest or their representative(s) are required in accordance with 37 CFR 1.33 and 11.18. Please see 37 CFR 1.4(d) for the form of the signature. If necessary, submit multiple forms for more than one signature see below*.*

☒ *Total of 1 forms are submitted.

The information is required to obtain or retain a benefit by the public which is to file (and by the USPTO to process) an application. Confidentiality is governed by 35 U.S.C. 122 and 37 CFR 1.11 and 1.14. This collection is estimated to take 12 hours to complete, including gathering, preparing, and submitting the completed application form to the USPTO. Time will vary depending upon the individual case. Any comments on the amount of time you require to complete this form and/or suggestions for reducing this burden, should be sent to the Chief Information Officer, U.S. Patent and Trademark Office, U.S. Department of Commerce, P.O. Box 1450, Alexandria, VA 22313-1450. DO NOT SEND FEES OR COMPLETED FORMS TO THIS ADDRESS. **SEND TO: Commissioner for Patents, P.O. Box 1450, Alexandria, VA 22313-1450.**

If you need assistance in completing the form, call 1-800-PTO-9199 and select option 2.

UNITED STATES PATENT AND TRADEMARK OFFICE

UNITED STATES DEPARTMENT OF COMMERCE
United States Patent and Trademark Office
Address: COMMISSIONER FOR PATENTS
P.O. Box 1450
Alexandria, Virginia 22313-1450
www.uspto.gov

APPLICATION NO.	FILING DATE	FIRST NAMED INVENTOR	ATTORNEY DOCKET NO.	CONFIRMATION NO.
13/029,445	02/17/2011	Hai Yu	83169190	1722

28395 7590 07/21/2011
BROOKS KUSHMAN P.C./FGTL
1000 TOWN CENTER
22ND FLOOR
SOUTHFIELD, MI 48075-1238

EXAMINER
KISWANTO, NICHOLAS

ART UNIT	PAPER NUMBER
3665	

MAIL DATE	DELIVERY MODE
07/21/2011	PAPER

Please find below and/or attached an Office communication concerning this application or proceeding.

The time period for reply, if any, is set in the attached communication.

UNITED STATES PATENT AND TRADEMARK OFFICE

Commissioner for Patents
United States Patent and Trademark Office
P.O. Box 1450
Alexandria, VA 22313-1450
www.uspto.gov

JUL 21 2011

BROOKS KUSHMAN P.C./FGTL
1000 TOWN CENTER
22ND FLOOR
SOUTHFIELD MI 48075-1238

In re Application of	:	
Yu Hai et al.	:	DECISION ON PETITION
Application No. 13/029,445	:	TO MAKE SPECIAL UNDER
Filed February 17, 2011	:	THE GREEN TECHNOLOGY
Attorney Docket No. **83169190**	:	PILOT PROGRAM

This is a decision on the petition under 37 CFR 1.102, filed March 24, 2011 to make the above-identified application special under the pilot program for applications pertaining to Green Technologies as set forth in 74 Federal Register Notice 64666 (December 8, 2009) and amended by 75 Federal Register Notice 28554 (May 21, 2010) and 75 Federal Register Notice 69049 (November 10, 2010).

The petition is **DISMISSED**.

If reconsideration of this decision is desired, a petition for reconsideration must be filed within ONE (1) MONTH OR THIRTY (30) DAYS from the mail date of this decision, whichever is longer. No extension of this time limit can be granted under 37 CFR 1.136(a) or (b). The petition for reconsideration should include an exhaustive attempt to provide the lacking item(s) noted below, since, after a decision on the petition for reconsideration, no further reconsideration or review of the matter will be undertaken by the Director.

A grantable petition to make an application special under 37 CFR 1.102 and the pilot program as set forth in 74 FR 64666 must be directed to a nonprovisional application filed under 35 USC 111(a) or be a national stage entry under 35 USC 371, exclusive of any reissue applications.

In order to qualify for special status, the following requirements must be met. 1) The application must have no more than 3 independent claims and no more than 20 total claims. 2) The application must not contain any multiple dependent claims. 3) The petition must state the basis for seeking special status, i.e., the claimed invention either: A) materially enhances the quality of the environment or B) materially contributes to: i) the discovery or development of renewable energy resources, ii) the more efficient utilization and conservation of energy resources, or iii) greenhouse gas emission reduction. 4) If the disclosure is not clear on its face that the claimed invention materially contributes under category (A) or (B), the petition must be accompanied by a statement by the applicant, assignee, or an attorney/agent registered to practice before the Office explaining

how the materiality standard is met. 5) A statement that applicant will agree to make an election without traverse in a telephonic interview if a restriction requirement is made by the examiner. 6) The petition to make special must be filed electronically. 7) The petition must be filed at least one day prior to the date that a first Office Action appears in the Patent Application Information Retrieval (PAIR) system. 8) The petition must be accompanied by a request for early publication in compliance with 37 CFR 1.219 and include the publication fee as set forth in 37 CFR 1.18(d).

The requirement for a fee for consideration of the petition to make special for applications pertaining to Green Technologies has been waived.

The petition lacks item 4.

In regard to item 4, the disclosure of the instant application does not adequately explain how the claimed "engine power elevation and active battery charge energy management strategies for plug-in hybrid electric vehicles" would materially contribute to the more efficient utilization and conservation of energy resources or the reduction of greenhouse gas emissions. In paragraph 0059 of the detailed description, line 3 applicants disclose the inefficiency of the engine at low torque: "In the range in which P_drv is less than the base engine power P_eng_bas level (e.g., level 82 shown in Fig. 3), the engine operation in such low torque region is relatively very inefficient." On the other hand, the extra engine power is buffered electrically in the battery to be used for vehicle propulsion as disclosed in paragraph 0060 and "the energy management strategies apply more and higher magnitude engine power elevation in order to execute active battery charge from fuel energy and energy buffering and redistribution in the trip domain" as disclosed in paragraph 0061 show that fuel energy from the engine is continuously utilized to either propel the vehicle or to charge the battery. More fuel is needed to keep the battery charged to propel the vehicle and to operate accessories such as air conditioning system, radio, lights, etc. In paragraph 0090 applicants talk about "disturbances" in mechanical, electrical and extra loads which are constant in any vehicle operation. According to fueleconomy.gov only 15% of energy of fuel burned is useful energy due to mentioned disturbances. In paragraph 0093 applicants disclose that the vehicle can deliver higher than normal fuel efficiency but, there is no evidence that such system have undergone any testing to prove the claimed concept. For the stated reasons, applicants' assertion of conservation of energy resources/reduction of greenhouse gases is speculative. As stated in the notice, the materiality standard does not permit an applicant to speculate as to how a hypothetical end-user might specially apply the invention in a manner than could materially contribute to category (A) or (B). *Also see MPEP § 708.02 (VI).* Accordingly, it is unclear as to how the claimed invention would materially contribute to category (B), and it is not agreed that the application on its face meets that materiality standard.

Any reconsideration of this decision should be submitted through the USPTO electronic filing system, EFS-Web, and selecting the document description of "Petition for Green Tech Pilot" on the EFS-Web screen.

Telephone inquiries concerning this decision should be directed to Lanna Mai at 571-272-6867.

The application is being forwarded to the Technology Center Art Unit 3665 for action in its regular turn.

/Lanna Mai/

Lanna Mai
Quality Assurance Specialist
Technology Center 3600

IN THE UNITED STATES PATENT AND TRADEMARK OFFICE

In re application of:

HAI YU et al.

Group Art Unit: 3665

Examiner: Kiswanto, Nicholas

Serial No.: 13/029,445

Filed: February 17, 2011

For: Engine Power Elevation and Active Battery Charge Energy Management Strategies for Plug-in Hybrid Electric Vehicles

Attorney Docket No.: 83169190 (FMC 3089 PUSP)

PETITION FOR RECONSIDERATION TO MAKE SPECIAL UNDER THE GREEN TECHNOLOGY PILOT PROGRAM

Commissioner for Patents
U.S. Patent and Trademark Office
P.O. Box 1450
Alexandria, VA 22313-1450

Dear Sir:

A petition under 37 CFR 1.102 to make the above-identified application special under the pilot program for applications pertaining to Green Technologies was filed on March 24, 2011 and dismissed on July 21, 2011. The Decision on Petition (July 21, 2011, p. 2) indicated that the petition lacked item 4 and set forth the following:

> In regard to item 4, the disclosure of the instant application does not adequately explain how the claimed "engine power elevation and battery charge energy management strategies for plug-in hybrid electric vehicles" would materially contribute to the more efficient utilization and conservation of energy resources or the reduction of greenhouse gas emissions. . . . For the stated reasons, applicants' assertion of conservation of energy resources/reduction of greenhouse gases is speculative. As stated in the notice, the materiality standard does not permit an applicant to speculate as to how a hypothetical end-user might specially apply the invention in a manner that could materially contribute to category (A) or (B). *Also see MPEP § 708.02(VI).* Accordingly, it is unclear as to how the claimed invention would materially contribute to category (B), and it is not agreed that the application on its face meets the materiality standard.

In response, the Applicant submits herewith a Preliminary Amendment amending claim 1 to read as follows:

> 1. A method for a plug-in hybrid electric vehicle having an engine and a battery configured to respectively deliver engine power and battery power to provide a total output power for powering the vehicle, the method comprising:
>
> determining an elevated engine power which falls within a total output power range where only engine power without battery power may be delivered to power the vehicle in response to a driver demand power and which is greater than the sum of the magnitudes of the driver demand power and vehicle powering losses; and
>
> controlling the engine to deliver the elevated engine power in response to the driver demand power.

Claim 1 specifically recites a "plug-in hybrid electric vehicle" which is vehicle structure indicative of such an alternatively powered vehicle. Hence, the invention of claim 1 materially contributes to the more efficient utilization and conservation of energy resources and greenhouse gas emission reduction. That is, plug-in hybrid electric vehicles materially contribute to the more efficient utilization and conservation of energy resources and greenhouse gas emission reduction.

The Applicant requests reconsideration of the petition filed on March 24, 2011 under 37 CFR 1.102 to make the above-identified application special under the pilot program for applications pertaining to Green Technologies.

Respectfully submitted,

Hai Yu et al.

By: /James N. Kallis/
James N. Kallis
Reg. No. 41,102
Attorney for Applicant

Date: July 27, 2011

BROOKS KUSHMAN P.C.
1000 Town Center, 22nd Floor
Southfield, MI 48075-1238
Phone: 248-358-4400; Fax: 248-358-3351

UNITED STATES PATENT AND TRADEMARK OFFICE

UNITED STATES DEPARTMENT OF COMMERCE
United States Patent and Trademark Office
Address: COMMISSIONER FOR PATENTS
P.O. Box 1450
Alexandria, Virginia 22313-1450
www.uspto.gov

APPLICATION NO.	FILING DATE	FIRST NAMED INVENTOR	ATTORNEY DOCKET NO.	CONFIRMATION NO.
13/029,445	02/17/2011	Hai Yu	83169190	1722

28395 7590 08/17/2011
BROOKS KUSHMAN P.C./FGTL
1000 TOWN CENTER
22ND FLOOR
SOUTHFIELD, MI 48075-1238

EXAMINER
KISWANTO, NICHOLAS

ART UNIT	PAPER NUMBER
3665	

MAIL DATE	DELIVERY MODE
08/17/2011	PAPER

Please find below and/or attached an Office communication concerning this application or proceeding.

The time period for reply, if any, is set in the attached communication.

UNITED STATES PATENT AND TRADEMARK OFFICE

Commissioner for Patents
United States Patent and Trademark Office
P.O. Box 1450
Alexandria, VA 22313-1450
www.uspto.gov

BROOKS KUSHMAN P.C./FGTL
1000 TOWN CENTER
22ND FLOOR
SOUTHFIELD MI 48075-1238

AUG 17 2011

In re Application of	:	
Hai Yu et al.	:	DECISION ON PETITION
Application No. 13/029,445	:	TO MAKE SPECIAL UNDER
Filed: February 17, 2011	:	THE GREEN TECHNOLOGY
Attorney Docket No. 83169190	:	PILOT PROGRAM

This is a decision on the petition under 37 CFR 1.102, filed July 27, 2011, to make the above-identified application special under the pilot program for applications pertaining to Green Technologies as set forth in 74 Federal Register Notice 64666 (December 8, 2009) and amended by 75 Federal Register Notice 28554 (May 21, 2010) and 75 Federal Register Notice 69049 (November 10, 2010).

The petition is **GRANTED**.

A grantable petition to make an application special under 37 CFR 1.102 and the pilot program as set forth in 74 FR 64666 must be directed to a nonprovisional application filed under 35 USC 111(a) or be a national stage entry under 35 USC 371, exclusive of any reissue applications.

In order to qualify for special status, the following requirements must be met. 1) The application must have no more than 3 independent claims and no more than 20 total claims. 2) The application must not contain any multiple dependent claims. 3) The petition must state the basis for seeking special status, i.e., the claimed invention either: A) materially enhances the quality of the environment or B) materially contributes to: i) the discovery or development of renewable energy resources, ii) the more efficient utilization and conservation of energy resources, or iii) greenhouse gas emission reduction. 4) If the disclosure is not clear on its face that the claimed invention materially contributes under category (A) or (B), the petition must be accompanied by a statement by the applicant, assignee, or an attorney/agent registered to practice before the Office explaining how the materiality standard is met. 5) A statement that applicant will agree to make an election without traverse in a telephonic interview if a restriction requirement is made by the examiner. 6) The petition to make special must be filed electronically. 7) The petition must be filed at least one day prior to the date that a first Office Action appears in the Patent Application Information Retrieval (PAIR) system. 8) The petition must be accompanied by a request for early publication in compliance with 37 CFR 1.219 and include the publication fee as set forth in 37 CFR 1.18(d).

The requirement for a fee for consideration of the petition to make special for applications pertaining to Green Technologies has been waived.

The instant petition complies with items 1 – 8 above. Accordingly, the above-identified application has been accorded "special" status.

Telephone inquires concerning this decision should be directed to Blaine Copenheaver at 571-272-1156.

The application is being forwarded to the examiner for action on the merits commensurate with this decision.

/Blaine Copenheaver/

Blaine Copenheaver
Quality Assurance Specialist
Technology Center 1700

Doc Code: PET.GREEN
Document Description: Petition for Green Tech Pilot

PTO/SB/420 (11-10)
Approved for use through 01/31/2011. OMB 0651-0062
U.S. Patent and Trademark Office; U. S. DEPARTMENT OF COMMERCE
Under the Paperwork Reduction Act of 1995, no persons are required to respond to a collection of information unless it displays a valid OMB control number.

PETITION TO MAKE SPECIAL UNDER THE GREEN TECHNOLOGY PILOT PROGRAM

Attorney Docket Number: 83161412(FMC3281PUS)	Application Number (if known): 13029488	Filing date: 2011-02-17
First Named Inventor: Dale S. Crombez		
Title: Method and System for Extending an Operating Range of a Motor Vehicle		

APPLICANT HEREBY REQUESTS TO PARTICIPATE IN THE GREEN TECHNOLOGY PILOT PROGRAM FOR THE ABOVE-IDENTIFIED APPLICATION. See Instruction Sheet on page 2.

This petition must be timely filed electronically using the USPTO electronic filing system, EFS-Web.

1. By filing this petition:

   Applicant is requesting early publication: Applicant hereby requests early publication under 37 CFR 1.219 and the publication fee set forth in 37 CFR 1.18(d) accompanies this request.

2. By filing this petition: applicant is agreeing to make an election without traverse in a telephonic interview and elect an invention that meets the eligibility requirements for the Green Technology Pilot Program, if the Office determines that the claims are not obviously directed to a single invention. See Instruction Sheet.

3. This request is accompanied by statements of special status for the eligibility requirement.

4. The application contains no more than three (3) independent claims and twenty (20) total claims.

5. The application does not contain any multiple dependent claims.

6. Other attachments: _____

Signature /Jeffrey M. Szuma/	Date 2011-03-18
Name (Print/Typed) Jeffrey M. Szuma	Registration Number 35700

Note: *Signatures of all the inventors or assignees of record of the entire interest or their representative(s) are required in accordance with 37 CFR 1.33 and 11.18. Please see 37 CFR 1.4(d) for the form of the signature. If necessary, submit multiple forms for more than one signature see below*.*

☐ *Total of ..... forms are submitted.

The information is required to obtain or retain a benefit by the public which is to file (and by the USPTO to process) an application. Confidentiality is governed by 35 U.S.C. 122 and 37 CFR 1.11 and 1.14. This collection is estimated to take 12 hours to complete, including gathering, preparing, and submitting the completed application form to the USPTO. Time will vary depending upon the individual case. Any comments on the amount of time you require to complete this form and/or suggestions for reducing this burden, should be sent to the Chief Information Officer, U.S. Patent and Trademark Office, U.S. Department of Commerce, P.O. Box 1450, Alexandria, VA 22313-1450. DO NOT SEND FEES OR COMPLETED FORMS TO THIS ADDRESS. **SEND TO: Commissioner for Patents, P.O. Box 1450, Alexandria, VA 22313-1450.**

If you need assistance in completing the form, call 1-800-PTO-9199 and select option 2.

Under the Paperwork Reduction Act of 1995, no persons are required to respond to a collection of information unless it displays a valid OMB control number.

Instruction Sheet for Petition to Make Special Under the Green Technology Pilot Program

(Not to be Submitted to the USPTO)

The following is a summary of the requirements (for more information see the notices (i) "Pilot Program for Green Technologies Including Greenhouse Gas Reduction," (ii) "Elimination of Classification Requirement in the Green Technology Pilot Program," and (iii) "Expansion and Extension of the Green Technology Pilot Program," available on the USPTO web site at http://www.uspto.gov/patents/init_events/green_tech.jsp):

1) The application must be a non-reissue, non-provisional utility application filed under 35 U.S.C. 111 (a), or an international application that has entered the national stage in compliance with 35 U.S.C. 371, irrespective of the filing date of the application. Reexamination proceedings are excluded from this pilot program.

2) The application must contain three or fewer independent claims and twenty or fewer total claims. The application must not contain any multiple dependent claims. For an application that contains more than three independent claims or twenty total claims, or multiple dependent claims, applicant must file a preliminary amendment in compliance with 37 CFR 1.121 to cancel the excess claims and/or the multiple dependent claims at the time the petition to make special is filed.

3) The claims must be directed to a single invention that materially enhances the quality of the environment, or that materially contributes to: (1) the discovery or development of renewable energy resources; (2) the more efficient utilization and conservation of energy resources; or (3) green house gas emission reduction (see the eligibility requirements of sections II and III of the notice (i) cited above). The petition must include a statement that, if the USPTO determines that the claims are directed to multiple inventions (e.g., in a restriction requirement), applicant will agree to make an election without traverse in a telephonic interview, and elect an invention that meets the eligibility requirements in section II or III of the notice (i) cited above.

4) The petition to make special must be timely filed electronically using the USPTO electronic filing system, EFS-Web, and selecting the document description of "Petition for Green Tech Pilot" on the EFS-Web screen. Applicant should use form PTO/SB/420, which is available as a Portable Document Format (PDF) fillable form in EFS-Web and on the USPTO Web site.

5) The petition to make special must be filed at least one day prior to the date that a first Office action (which may be an Office action containing only a restriction requirement) appears in the Patent Application Information Retrieval (PAIR) system. Applicant may check the status of the application using PAIR.

6) The petition to make special must be accompanied by a request for early publication in compliance with 37 CFR 1.219 and the publication fee set forth in 37 CFR 1.18(d).

Privacy Act Statement

The **Privacy Act of 1974 (P.L. 93-579)** requires that you be given certain information in connection with your submission of the attached form related to a patent application or patent. Accordingly, pursuant to the requirements of the Act, please be advised that: (1) the general authority for the collection of this information is 35 U.S.C. 2(b)(2); (2) furnishing of the information solicited is voluntary; and (3) the principal purpose for which the information is used by the U.S. Patent and Trademark Office is to process and/or examine your submission related to a patent application or patent. If you do not furnish the requested information, the U.S. Patent and Trademark Office may not be able to process and/or examine your submission, which may result in termination of proceedings or abandonment of the application or expiration of the patent.

The information provided by you in this form will be subject to the following routine uses:

1. The information on this form will be treated confidentially to the extent allowed under the Freedom of Information Act (5 U.S.C. 552) and the Privacy Act (5 U.S.C 552a). Records from this system of records may be disclosed to the Department of Justice to determine whether disclosure of these records is required by the Freedom of Information Act.
2. A record from this system of records may be disclosed, as a routine use, in the course of presenting evidence to a court, magistrate, or administrative tribunal, including disclosures to opposing counsel in the course of settlement negotiations.
3. A record in this system of records may be disclosed, as a routine use, to a Member of Congress submitting a request involving an individual, to whom the record pertains, when the individual has requested assistance from the Member with respect to the subject matter of the record.
4. A record in this system of records may be disclosed, as a routine use, to a contractor of the Agency having need for the information in order to perform a contract. Recipients of information shall be required to comply with the requirements of the Privacy Act of 1974, as amended, pursuant to 5 U.S.C. 552a(m).
5. A record related to an International Application filed under the Patent Cooperation Treaty in this system of records may be disclosed, as a routine use, to the International Bureau of the World Intellectual Property Organization, pursuant to the Patent Cooperation Treaty.
6. A record in this system of records may be disclosed, as a routine use, to another federal agency for purposes of National Security review (35 U.S.C. 181) and for review pursuant to the Atomic Energy Act (42 U.S.C. 218(c)).
7. A record from this system of records may be disclosed, as a routine use, to the Administrator, General Services, or his/her designee, during an inspection of records conducted by GSA as part of that agency's responsibility to recommend improvements in records management practices and programs, under authority of 44 U.S.C. 2904 and 2906. Such disclosure shall be made in accordance with the GSA regulations governing inspection of records for this purpose, and any other relevant (*i.e.*, GSA or Commerce) directive. Such disclosure shall not be used to make determinations about individuals.
8. A record from this system of records may be disclosed, as a routine use, to the public after either publication of the application pursuant to 35 U.S.C. 122(b) or issuance of a patent pursuant to 35 U.S.C. 151. Further, a record may be disclosed, subject to the limitations of 37 CFR 1.14, as a routine use, to the public if the record was filed in an application which became abandoned or in which the proceedings were terminated and which application is referenced by either a published application, an application open to public inspection or an issued patent.
9. A record from this system of records may be disclosed, as a routine use, to a Federal, State, or local law enforcement agency, if the USPTO becomes aware of a violation or potential violation of law or regulation.

UNITED STATES PATENT AND TRADEMARK OFFICE

UNITED STATES DEPARTMENT OF COMMERCE
United States Patent and Trademark Office
Address: COMMISSIONER FOR PATENTS
P.O. Box 1450
Alexandria, Virginia 22313-1450
www.uspto.gov

APPLICATION NO.	FILING DATE	FIRST NAMED INVENTOR	ATTORNEY DOCKET NO.	CONFIRMATION NO.
13/029,488	02/17/2011	Dale Scott Crombez	83161412	1807

28395 7590 05/31/2011
BROOKS KUSHMAN P.C./FGTL
1000 TOWN CENTER
22ND FLOOR
SOUTHFIELD, MI 48075-1238

EXAMINER
KEITH, JACK W

ART UNIT	PAPER NUMBER
3663	

MAIL DATE	DELIVERY MODE
05/31/2011	PAPER

Please find below and/or attached an Office communication concerning this application or proceeding.

The time period for reply, if any, is set in the attached communication.

UNITED STATES PATENT AND TRADEMARK OFFICE

Commissioner for Patents
United States Patent and Trademark Office
P.O. Box 1450
Alexandria, VA 22313-1450
www.uspto.gov

MAY 31 2011

BROOKS KUSHMAN P.C./FGTL
1000 TOWN CENTER
22ND FLOOR
SOUTHFIELD MI 48075-1238

In re Application of	:	
DALE CROMBEZ et al.	:	DECISION ON PETITION
Application No. 13/029,488	:	TO MAKE SPECIAL UNDER
Filed: February 17, 2011	:	THE GREEN TECHNOLOGY
Attorney Docket No. 83161412	:	PILOT PROGRAM

This is a decision on the petitions under 37 CFR 1.102, filed March 21, 2011 to make the above-identified application special under the pilot program for applications pertaining to Green Technologies as set forth in 74 Federal Register Notice 64666 (December 8, 2009) and amended by 75 Federal Register Notice 28554 (May 21, 2010) and 75 Federal Register Notice 69049 (November 10, 2010).

The petition is **DISMISSED**.

If reconsideration of this decision is desired, a petition for reconsideration must be filed within ONE (1) MONTH OR THIRTY (30) DAYS from the mail date of this decision, whichever is longer. No extension of this time limit can be granted under 37 CFR 1.136(a) or (b). The petition for reconsideration should include an exhaustive attempt to provide the lacking item(s) noted below, since, after a decision on the petition for reconsideration, no further reconsideration or review of the matter will be undertaken by the Director.

A grantable petition to make an application special under 37 CFR 1.102 and the pilot program as set forth in 74 FR 64666 must be directed to a nonprovisional application filed under 35 USC 111(a) or be a national stage entry under 35 USC 371, exclusive of any reissue applications.

In order to qualify for special status, the following requirements must be met. 1) The application must have no more than 3 independent claims and no more than 20 total claims. 2) The application must not contain any multiple dependent claims. 3) The petition must state the basis for seeking special status, i.e., the claimed invention either: A) materially enhances the quality of the environment or B) materially contributes to: i) the discovery or development of renewable energy resources, ii) the more efficient utilization and conservation of energy resources, or iii) greenhouse gas emission reduction. 4) If the disclosure is not clear on its face that the claimed invention materially contributes under category (A) or (B), the petition must be accompanied by a statement by the applicant, assignee, or an attorney/agent registered to practice before the Office explaining how the materiality standard is met.

5) A statement that applicant will agree to make an election without traverse in a telephonic interview if a restriction requirement is made by the examiner. 6) The petition to make special must be filed electronically. 7) The petition must be filed at least one day prior to the date that a first Office Action appears in the Patent Application Information Retrieval (PAIR) system. 8) The petition must be accompanied by a request for early publication in compliance with 37 CFR 1.219 and include the publication fee as set forth in 37 CFR 1.18(d).

The requirement for a fee for consideration of the petition to make special for applications pertaining to Green Technologies has been waived.

The petition lacks item 4.

In regard to item 4, the disclosure of the instant application indicates that the economy modes of vehicle operation may limit vehicle speed, limit vehicle acceleration, modifying vehicle acceleration response characteristics, and limiting vehicle climate control system settings. These are the features that may have negative effects on drivability of a vehicle, and a driver's comfort. As the disclosure fails to specify what constitutes the first threshold or second threshold of the fuel level, this raises a question on whether the automatic entry of the economy mode would be welcomed by a driver or considered an operating error by a driver who would promptly override it. Since the economy mode must be authorized by a driver, may be on for only a predetermined time period, and can be overridden by the driver, the economy mode may be utilized very little. In addition, whether a vehicle is operated in the economy mode or normal operating mode, the vehicle would still emit greenhouse gases. Further, the disclosure does not explain how much energy would be saved, and how much greenhouse gas would be reduced when a vehicle is operated in the economy mode. Therefore, petitioner's assertion of the claimed system's efficient utilization and conservation of energy resources, or reduction of greenhouse gas emissions appears to be speculative. As stated in the notice, the materiality standard does not permit an applicant to speculate as to how a hypothetical end-user might specially apply the invention in a manner than could materially contribute to category (A) or (B). *Also see MPEP § 708.02 (VI).* Accordingly, it is not agreed that the application on its face meets that materiality standard.

Any reconsideration of this decision should be submitted through the USPTO electronic filing system, EFS-Web, and selecting the document description of "Petition for Green Tech Pilot" on the EFS-Web screen.

Telephone inquiries concerning this decision should be directed to Lanna Mai at 571-272-6867.

The application is being forwarded to the Technology Center Art Unit 3663 for action in its regular turn.

/Lanna Mai/

Lanna Mai
Quality Assurance Specialist
Technology Center 3600

IN THE UNITED STATES PATENT AND TRADEMARK OFFICE

In re application of:

DALE SCOTT CROMBEZ et al.

Group Art Unit: 3663

Examiner: Jack W. Keith

Serial No.: 13/029,488

Filed: February 17, 2011

For: METHOD AND SYSTEM FOR EXTENDING AN OPERATING RANGE OF A MOTOR VEHICLE

Attorney Docket No.: 83161412 (FMC3281PUS)

REQUEST FOR RECONSIDERATION OF DECISION ON PETITION FOR THE GREEN TECHNOLOGY PILOT PROGRAM

Commissioner for Patents
U.S. Patent and Trademark Office
P.O. Box 1450
Alexandria, VA 22313-1450

Dear Sir:

In response to the Decision on the Petition mailed May 31, 2011, Applicants respectfully request reconsideration of that Petition filed March 18, 2011 for the reasons stated herein.

In the decision dismissing the Petition, the Examiner stated that the Petition lacked a statement pertaining to the materiality standard if the application disclosure is not clear on its face as to the materiality of the basis for the special status of the invention. As well, the Examiner indicated her disagreement with the Applicants' submission that it is clear on the face of the present application that the claimed invention materially contributes to the more efficient utilization and conservation of energy resources or the reduction of greenhouse gas emissions.

In response, the Applicants respectfully disagree and re-iterate that the present application is clear on its face that the claimed invention materially contributes to the more efficient utilization and conservation of energy resources or the reduction of greenhouse gas emissions. In that regard, the Applicants respectfully direct the Examiner's attention to the title of the present application, namely, "Method and System for Extending the Operating Range of a Motor Vehicle." As is readily apparent from that title, the claimed method and system of the present application extend the operating range of a motor vehicle, thereby improving vehicle fuel efficiency which results in the use of less fuel. Improved fuel efficiency and reduced fuel use clearly meet the materiality standard of more efficient utilization and conservation of energy resources.

In that regard, contrary to the Examiner's contention, the eligibility requirements for the "Green Technology Pilot Program" do not require the Applicants to quantify an amount of energy conserved or an amount of reduced emissions. Moreover, regardless of the frequency or length of time that the economy mode of the Applicants' invention is utilized, the economy mode may be entered automatically under certain conditions and its use will result in improved fuel efficiency and reduced fuel consumption, thereby materially contributing to the more efficient utilization and conservation of energy resources or the reduction of greenhouse gas emissions.

Nevertheless, a revised statement in support of the materiality standard is filed herewith. That revised statement includes references to the specification and claims further supporting that the claimed invention is clearly eligible for the "Green Technology Pilot Program" as materially contributing to the more efficient utilization and conservation of energy resources or the reduction of greenhouse gas emissions.

Accordingly, the Applicants respectfully request reconsideration of the Decision and granting of the Petition. No additional fee is believed to be due. However, please charge any additional required fees to Deposit Account No. 06-1510 (Ford Global Technologies, LLC).

Respectfully submitted,

DALE SCOTT CROMBEZ et al.

By: /Jeffrey M. Szuma/
Jeffrey M. Szuma
Reg. No. 35,700
Attorney for Applicant

Date: June 9, 2011

BROOKS KUSHMAN P.C.
1000 Town Center, 22nd Floor
Southfield, MI 48075-1238
Phone: 248-358-4400
Fax: 248-358-3351

UNITED STATES PATENT AND TRADEMARK OFFICE

UNITED STATES DEPARTMENT OF COMMERCE
United States Patent and Trademark Office
Address: COMMISSIONER FOR PATENTS
P.O. Box 1450
Alexandria, Virginia 22313-1450
www.uspto.gov

APPLICATION NO.	FILING DATE	FIRST NAMED INVENTOR	ATTORNEY DOCKET NO.	CONFIRMATION NO.
13/029,488	02/17/2011	Dale Scott Crombez	83161412	1807

28395 7590 07/01/2011
BROOKS KUSHMAN P.C./FGTL
1000 TOWN CENTER
22ND FLOOR
SOUTHFIELD, MI 48075-1238

EXAMINER
KEITH, JACK W

ART UNIT	PAPER NUMBER
3663	

MAIL DATE	DELIVERY MODE
07/01/2011	PAPER

Please find below and/or attached an Office communication concerning this application or proceeding.

The time period for reply, if any, is set in the attached communication.

UNITED STATES PATENT AND TRADEMARK OFFICE

Commissioner for Patents
United States Patent and Trademark Office
P.O. Box 1450
Alexandria, VA 22313-1450
www.uspto.gov

7/1/11

BROOKS KUSHMAN P.C./FGTL
1000 TOWN CENTER
22ND FLOOR
SOUTHFIELD MI 48075-1238

In re Application of	:	
Crombez	:	DECISION ON PETITION
Application No. 13/029,488	:	TO MAKE SPECIAL UNDER
Filed: 2/17/2011	:	THE GREEN TECHNOLOGY
Attorney Docket No. **83161412**	:	PILOT PROGRAM

This is a decision on the request for reconsideration, filed 6/9/2011, to make the above-identified application special under the pilot program for applications pertaining to Green Technologies as set forth in 74 Federal Register Notice 64666 (December 8, 2009) and amended by 75 Federal Register Notice 28554 (May 21, 2010) and 75 Federal Register Notice 69049 (November 10, 2010).

The petition is **GRANTED**.

A grantable petition to make an application special under 37 CFR 1.102 and the pilot program as set forth in 74 FR 64666 must be directed to a nonprovisional application filed under 35 USC 111(a) or be a national stage entry under 35 USC 371, exclusive of any reissue applications.

In order to qualify for special status, the following requirements must be met. 1) The application must have no more than 3 independent claims and no more than 20 total claims. 2) The application must not contain any multiple dependent claims. 3) The petition must state the basis for seeking special status, i.e., the claimed invention either: A) materially enhances the quality of the environment or B) materially contributes to: i) the discovery or development of renewable energy resources, ii) the more efficient utilization and conservation of energy resources, or iii) greenhouse gas emission reduction. 4) If the disclosure is not clear on its face that the claimed invention materially contributes under category (A) or (B), the petition must be accompanied by a statement by the applicant, assignee, or an attorney/agent registered to practice before the Office explaining how the materiality standard is met. 5) A statement that applicant will agree to make an election without traverse in a telephonic interview if a restriction requirement is made by the examiner. 6) The petition to make special must be filed electronically. 7) The petition must be filed at least one day prior to the date that a first Office Action appears in the Patent Application Information Retrieval (PAIR) system. 8) The petition must be accompanied by a

request for early publication in compliance with 37 CFR 1.219 and include the publication fee as set forth in 37 CFR 1.18(d).

The requirement for a fee for consideration of the petition to make special for applications pertaining to Green Technologies has been waived.

The instant petition complies with items 1 – 8 above. Accordingly, the above-identified application has been accorded "special" status.

Telephone inquires concerning this decision should be directed to Tom Dunn at 571-272-1171.

The application is being forwarded to the Technology Center Art Unit 3663 for action on the merits commensurate with this decision.

/Tom Dunn/

Tom Dunn
Quality Assurance Specialist
Technology Center 1700

UNITED STATES PATENT AND TRADEMARK OFFICE

Commissioner for Patents
United States Patent and Trademark Office
P.O. Box 1450
Alexandria, VA 22313-1450
www.uspto.gov

MARK TERRY, ESQ.
801 BRICKELL AVE., SUITE 900
Miami FL 33131

MAILED
APR 22 2011
OFFICE OF PETITIONS

In re Application of	:	
Harvey L. Gansner	:	
Application No. 13/029,504	:	DECISION ON PETITION
Filed: February 17, 2011	:	TO MAKE SPECIAL UNDER
Attorney Docket No. Gansner-1	:	37 CFR 1.102(c)(1)
	:	

This is a decision on the petition under 37 CFR 1.102(c)(1), filed March 10, 2011, to make the above-identified application special based on applicant's age as set forth in M.P.E.P. § 708.02, Section IV.

The petition is **GRANTED**.

A grantable petition to make an application special under 37 CFR 1.102(c)(1) and MPEP § 708.02, Section IV: Applicant's Age must be accompanied by evidence showing that at least one of the applicants is 65 years of age, or more, such as a birth certificate or a statement by applicant. No fee is required

The instant petition includes a statement from the attorney of record declaring that he/she is in possession of such evidence that shows the applicant, Harvey L. Gansner is 65 years of age or older. Accordingly, the above-identified application has been accorded "special" status.

Telephone inquiries concerning this decision should be directed to Terri Johnson at 571-272-2991.

All other inquiries concerning either the examination or status of the application should be directed to the Technology Center.

The application is being forwarded to the Technology Center Art Unit 2129 for action on the merits commensurate with this decision.

/Terri Johnson/
Terri Johnson
Petitions Examiner
Office of Petitions

UNITED STATES PATENT AND TRADEMARK OFFICE

Commissioner for Patents
United States Patent and Trademark Office
P.O. Box 1450
Alexandria, VA 22313-1450
www.uspto.gov

PATENT, COPYRIGHT & TRADEMARK LAW GROUP
4199 Kinross Lakes Parkway
Suite 275
RICHFIELD OH 44286

MAILED

MAY 12 2011

OFFICE OF PETITIONS

In re Application of:	:	
Tsengas et al.	:	
Application No. 13/029510	:	DECISION DISMISSING
Filing or 371(c) Date: 02/17/2011	:	PETITION UNDER
Title of Invention:	:	37 CFR 1.47(a)
TRANSFORMABLE,	:	
DUAL ELEMENT PET TOY	:	

This Decision is in response to the "Petition Under 37 C.F.R. 1.47," filed March 28, 2011, to allow the other inventor(s) to proceed with the application on behalf of himself or herself and the nonsigning inventor(s). The petition is properly treated under 37 C.F.R. 1.47(a).

The petition is **dismissed**.

Rule 47 applicant is given TWO (2) MONTHS from the mailing date of this decision to reply, correcting the below-noted deficiencies. Any reply should be entitled "Request for Reconsideration of Petition Under [insert the applicable code section]"; should only address the deficiencies noted below, except that the reply may include an oath or declaration executed by the non-signing inventor. Failure to respond will result in abandonment of the application. Any extensions of time will be governed by 37 CFR 1.136(a).

Background

The above-identified application was filed on February 17, 2011, and included a declaration listing as inventors of the present application Dr. Steven Tsengas, Justine A. Conklin and Jerome A. Spelic. The declaration, however, was unexecuted. The Office mailed a Notice to File Missing Parts of Nonprovisional Application, on March 28, 2011, requiring *inter alia*, a properly signed oath or declaration.

The present petition

Applicant files the present petition wherein Applicant provides that the nonsigning inventor, Jerome a. Spelic, is a former employee of OurPet's Company, and since his termination has refused to cooperate with the proper filing of this application.

No oath or declaration has been included with the present petition.

Applicable Law, Rules and MPEP

A grantable petition under 37 CFR 1.47(a) requires: (1) proof that the non-signing inventor cannot be reached or refuses to sign the oath or declaration after having been presented with the application papers (specification, claims and drawings); (2) an acceptable oath or declaration in compliance with 35 U.S.C. §§ 115 and 116; (3) the petition fee; and (4) a statement of the last known address of the non-signing inventor. Applicant lacks items (1) and (2) set forth above.

As to item (1), and inventor Spelic, the MPEP provides:

> A refusal by an inventor to sign an oath or declaration when the inventor has not been presented with the application papers does not itself suggest that the inventor is refusing to join the application unless it is clear that the inventor understands exactly what he or she is being asked to sign and refuses to accept the application papers. A copy of the application papers should be sent to the last known address of the non-signing inventor, or, if the nonsigning inventor is represented by counsel, to the address of the nonsigning inventor's attorney. The fact that an application may contain proprietary information does not relieve the 37 CFR 1.47 applicant of the responsibility to present the application papers to the inventor if the inventor is willing to receive the papers in order to sign the oath or declaration.

MPEP 409.03(d).

Analysis

As to inventor Spelic, applicant has not presented evidence that a copy of the application papers were sent to the last known address of the non-signing inventor. Applicant must present a copy of the application papers to the nonsigning inventor. Applicant is cautioned that receipt of an application transmitted via email must be demonstrated by Applicant before a petition may be granted. While receipt of an email may be confirmed by the sender, receipt of an email attachment may not be confirmed by the sender. Applicant must present a copy of the application papers to the nonsigning inventor. The MPEP provides

> Proof that a bona fide attempt was made to present a copy of the application papers (specification, including claims, drawings, and oath or declaration) to the nonsigning inventor for signature, but the inventor refused to accept delivery of the papers or expressly stated that the application papers should not be sent, may be sufficient. When there is an express oral refusal, that fact along with the time and place of the refusal must be stated in the statement of facts. When there is an express written refusal, a copy of the document evidencing that refusal must be made part of the statement of facts. The document may be redacted to remove material not related to the inventor's reasons for refusal.

MPEP 409.03(d).

In this instance, Applicant provides that the non-signing inventor, Jerome a. Spelic, is a former employee of OurPet's Company, and since his termination has refused to cooperate with the proper filing of this application. Applicant must, however, mail the application (specification, claims and drawings), to the last known address of the inventors. That address should be the last known address at which the inventors customarily receive mail. See MPEP § 605.03. Ordinarily, the last known address will be the last known residence of the nonsigning inventor.

As to item (2), the MPEP 409.03(a), At Least One Joint Inventor Available, provides in relevant part:

> All the available joint inventors must (1) make oath or declaration on their own behalf as required by 37 CFR 1.63 or 1.175 (see MPEP § 602, § 605.01, and § 1414) and (2) make oath or declaration on behalf of the nonsigning joint inventor as required by 37 CFR 1.64. An oath or declaration signed by all the available joint inventors with the signature block of the nonsigning inventor(s) left blank may be treated as having been signed by all the available joint inventors on behalf of the nonsigning inventor(s), unless otherwise indicated. (Emphasis supplied).

As to item (2), oath or declaration signed by all the available joint inventors with the signature block of the nonsigning inventor(s) left blank, is required.

Conclusion

Applicant must present a copy of the application to the nonsigning inventor before a refusal to join in the application may be alleged, and an oath or declaration signed by all the available joint inventors with the signature block of the nonsigning inventor(s) left blank, is required.

Further correspondence with respect to this matter should be addressed as follows:

By mail: Director for Patents
PO Box 1450
Alexandria, VA 22313-1450

By FAX: (571) 273-8300
Attn: Office of Petitions

By hand: Customer Service Window
Randolph Building
401 Dulany Street
Alexandria, VA 22314

Telephone inquiries concerning this matter should be directed to the undersigned at (571) 272-3232.

/DLW/

Derek L. Woods
Attorney
Office of Petitions

Doc Code: PET.GREEN
Document Description: Petition for Green Tech Pilot

PTO/SB/420 (11-10)
Approved for use through 01/31/2011. OMB 0651-0062
U.S. Patent and Trademark Office; U. S. DEPARTMENT OF COMMERCE
Under the Paperwork Reduction Act of 1995, no persons are required to respond to a collection of information unless it displays a valid OMB control number.

PETITION TO MAKE SPECIAL UNDER THE GREEN TECHNOLOGY PILOT PROGRAM

Attorney Docket Number: 83165719(FMC3409PUS)	Application Number (if known): 13029547	Filing date: 2011-02-17
First Named Inventor: Dale S. Crombez		
Title: Method and System for Extending an Operating Range of a Motor Vehicle		

APPLICANT HEREBY REQUESTS TO PARTICIPATE IN THE GREEN TECHNOLOGY PILOT PROGRAM FOR THE ABOVE-IDENTIFIED APPLICATION. See Instruction Sheet on page 2.

This petition must be timely filed electronically using the USPTO electronic filing system, EFS-Web.

1. By filing this petition:

   Applicant is requesting early publication: Applicant hereby requests early publication under 37 CFR 1.219 and the publication fee set forth in 37 CFR 1.18(d) accompanies this request.

2. By filing this petition: applicant is agreeing to make an election without traverse in a telephonic interview and elect an invention that meets the eligibility requirements for the Green Technology Pilot Program, if the Office determines that the claims are not obviously directed to a single invention. See Instruction Sheet.

3. This request is accompanied by statements of special status for the eligibility requirement.

4. The application contains no more than three (3) independent claims and twenty (20) total claims.

5. The application does not contain any multiple dependent claims.

6. Other attachments: _____

Signature /Jeffrey M. Szuma/	Date 2011-03-18
Name (Print/Typed) Jeffrey M. Szuma	Registration Number 35700

Note: *Signatures of all the inventors or assignees of record of the entire interest or their representative(s) are required in accordance with 37 CFR 1.33 and 11.18. Please see 37 CFR 1.4(d) for the form of the signature. If necessary, submit multiple forms for more than one signature see below*.*

☐ *Total of ..... forms are submitted.

The information is required to obtain or retain a benefit by the public which is to file (and by the USPTO to process) an application. Confidentiality is governed by 35 U.S.C. 122 and 37 CFR 1.11 and 1.14. This collection is estimated to take 12 hours to complete, including gathering, preparing, and submitting the completed application form to the USPTO. Time will vary depending upon the individual case. Any comments on the amount of time you require to complete this form and/or suggestions for reducing this burden, should be sent to the Chief Information Officer, U.S. Patent and Trademark Office, U.S. Department of Commerce, P.O. Box 1450, Alexandria, VA 22313-1450. DO NOT SEND FEES OR COMPLETED FORMS TO THIS ADDRESS. **SEND TO: Commissioner for Patents, P.O. Box 1450, Alexandria, VA 22313-1450.**

If you need assistance in completing the form, call 1-800-PTO-9199 and select option 2.

Under the Paperwork Reduction Act of 1995, no persons are required to respond to a collection of information unless it displays a valid OMB control number.

Instruction Sheet for Petition to Make Special Under the Green Technology Pilot Program

(Not to be Submitted to the USPTO)

The following is a summary of the requirements (for more information see the notices (i) "Pilot Program for Green Technologies Including Greenhouse Gas Reduction," (ii) "Elimination of Classification Requirement in the Green Technology Pilot Program," and (iii) "Expansion and Extension of the Green Technology Pilot Program," available on the USPTO web site at http://www.uspto.gov/patents/init_events/green_tech.jsp):

1) The application must be a non-reissue, non-provisional utility application filed under 35 U.S.C. 111 (a), or an international application that has entered the national stage in compliance with 35 U.S.C. 371, irrespective of the filing date of the application. Reexamination proceedings are excluded from this pilot program.

2) The application must contain three or fewer independent claims and twenty or fewer total claims. The application must not contain any multiple dependent claims. For an application that contains more than three independent claims or twenty total claims, or multiple dependent claims, applicant must file a preliminary amendment in compliance with 37 CFR 1.121 to cancel the excess claims and/or the multiple dependent claims at the time the petition to make special is filed.

3) The claims must be directed to a single invention that materially enhances the quality of the environment, or that materially contributes to: (1) the discovery or development of renewable energy resources; (2) the more efficient utilization and conservation of energy resources; or (3) green house gas emission reduction (see the eligibility requirements of sections II and III of the notice (i) cited above). The petition must include a statement that, if the USPTO determines that the claims are directed to multiple inventions (e.g., in a restriction requirement), applicant will agree to make an election without traverse in a telephonic interview, and elect an invention that meets the eligibility requirements in section II or III of the notice (i) cited above.

4) The petition to make special must be timely filed electronically using the USPTO electronic filing system, EFS-Web, and selecting the document description of "Petition for Green Tech Pilot" on the EFS-Web screen. Applicant should use form PTO/SB/420, which is available as a Portable Document Format (PDF) fillable form in EFS-Web and on the USPTO Web site.

5) The petition to make special must be filed at least one day prior to the date that a first Office action (which may be an Office action containing only a restriction requirement) appears in the Patent Application Information Retrieval (PAIR) system. Applicant may check the status of the application using PAIR.

6) The petition to make special must be accompanied by a request for early publication in compliance with 37 CFR 1.219 and the publication fee set forth in 37 CFR 1.18(d).

Privacy Act Statement

The **Privacy Act of 1974 (P.L. 93-579)** requires that you be given certain information in connection with your submission of the attached form related to a patent application or patent. Accordingly, pursuant to the requirements of the Act, please be advised that: (1) the general authority for the collection of this information is 35 U.S.C. 2(b)(2); (2) furnishing of the information solicited is voluntary; and (3) the principal purpose for which the information is used by the U.S. Patent and Trademark Office is to process and/or examine your submission related to a patent application or patent. If you do not furnish the requested information, the U.S. Patent and Trademark Office may not be able to process and/or examine your submission, which may result in termination of proceedings or abandonment of the application or expiration of the patent.

The information provided by you in this form will be subject to the following routine uses:

1. The information on this form will be treated confidentially to the extent allowed under the Freedom of Information Act (5 U.S.C. 552) and the Privacy Act (5 U.S.C 552a). Records from this system of records may be disclosed to the Department of Justice to determine whether disclosure of these records is required by the Freedom of Information Act.
2. A record from this system of records may be disclosed, as a routine use, in the course of presenting evidence to a court, magistrate, or administrative tribunal, including disclosures to opposing counsel in the course of settlement negotiations.
3. A record in this system of records may be disclosed, as a routine use, to a Member of Congress submitting a request involving an individual, to whom the record pertains, when the individual has requested assistance from the Member with respect to the subject matter of the record.
4. A record in this system of records may be disclosed, as a routine use, to a contractor of the Agency having need for the information in order to perform a contract. Recipients of information shall be required to comply with the requirements of the Privacy Act of 1974, as amended, pursuant to 5 U.S.C. 552a(m).
5. A record related to an International Application filed under the Patent Cooperation Treaty in this system of records may be disclosed, as a routine use, to the International Bureau of the World Intellectual Property Organization, pursuant to the Patent Cooperation Treaty.
6. A record in this system of records may be disclosed, as a routine use, to another federal agency for purposes of National Security review (35 U.S.C. 181) and for review pursuant to the Atomic Energy Act (42 U.S.C. 218(c)).
7. A record from this system of records may be disclosed, as a routine use, to the Administrator, General Services, or his/her designee, during an inspection of records conducted by GSA as part of that agency's responsibility to recommend improvements in records management practices and programs, under authority of 44 U.S.C. 2904 and 2906. Such disclosure shall be made in accordance with the GSA regulations governing inspection of records for this purpose, and any other relevant (*i.e.*, GSA or Commerce) directive. Such disclosure shall not be used to make determinations about individuals.
8. A record from this system of records may be disclosed, as a routine use, to the public after either publication of the application pursuant to 35 U.S.C. 122(b) or issuance of a patent pursuant to 35 U.S.C. 151. Further, a record may be disclosed, subject to the limitations of 37 CFR 1.14, as a routine use, to the public if the record was filed in an application which became abandoned or in which the proceedings were terminated and which application is referenced by either a published application, an application open to public inspection or an issued patent.
9. A record from this system of records may be disclosed, as a routine use, to a Federal, State, or local law enforcement agency, if the USPTO becomes aware of a violation or potential violation of law or regulation.

UNITED STATES PATENT AND TRADEMARK OFFICE

UNITED STATES DEPARTMENT OF COMMERCE
United States Patent and Trademark Office
Address: COMMISSIONER FOR PATENTS
P.O. Box 1450
Alexandria, Virginia 22313-1450
www.uspto.gov

APPLICATION NO.	FILING DATE	FIRST NAMED INVENTOR	ATTORNEY DOCKET NO.	CONFIRMATION NO.
13/029,547	02/17/2011	Dale Scott Crombez	83165719	1926

28395 7590 04/21/2011
BROOKS KUSHMAN P.C./FGTL
1000 TOWN CENTER
22ND FLOOR
SOUTHFIELD, MI 48075-1238

EXAMINER

ART UNIT	PAPER NUMBER
3661	

MAIL DATE	DELIVERY MODE
04/21/2011	PAPER

Please find below and/or attached an Office communication concerning this application or proceeding.

The time period for reply, if any, is set in the attached communication.

UNITED STATES PATENT AND TRADEMARK OFFICE

Commissioner for Patents
United States Patent and Trademark Office
P.O. Box 1450
Alexandria, VA 22313-1450
www.uspto.gov

BROOKS KUSHMAN P.C./FGTL
1000 TOWN CENTER
22ND FLOOR
SOUTHFIELD MI 48075-1238

In re Application of	:	
CROMBEZ, DALE SCOTT	:	DECISION ON PETITION
Application No. 13/029,547	:	TO MAKE SPECIAL UNDER
Filed: Feb. 17, 2011	:	THE GREEN TECHNOLOGY
Attorney Docket No. 83165719	:	PILOT PROGRAM

This is a decision on the petition under 37 CFR 1.102, filed March 21, 2011 to make the above-identified application special under the pilot program for applications pertaining to Green Technologies as set forth in 74 Federal Register Notice 64666 (December 8, 2009) and amended by 75 Federal Register Notice 28554 (May 21, 2010) and 75 Federal Register Notice 69049 (November 10, 2010).

The petition is **dismissed**.

If reconsideration of this decision is desired, a petition for reconsideration must be filed within ONE (1) MONTH OR THIRTY (30) DAYS from the mail date of this decision, whichever is longer. No extension of this time limit can be granted under 37 CFR 1.136(a) or (b). The petition for reconsideration should include an exhaustive attempt to provide the lacking item(s) noted below, since, after a decision on the petition for reconsideration, no further reconsideration or review of the matter will be undertaken by the Director.

A grantable petition to make an application special under 37 CFR 1.102 and the pilot program as set forth in 74 FR 64666 must be directed to a nonprovisional application filed under 35 USC 111(a) or be a national stage entry under 35 USC 371, exclusive of any reissue applications.

In order to qualify for special status, the following requirements must be met. 1) The application must have no more than 3 independent claims and no more than 20 total claims. 2) The application must not contain any multiple dependent claims. 3) The petition must state the basis for seeking special status, i.e., the claimed invention either: A) materially enhances the quality of the environment or B) materially contributes to: i) the discovery or development of renewable energy resources, ii) the more efficient utilization and conservation of energy resources, or iii) greenhouse gas emission reduction. 4) If the disclosure is not clear on its face that the claimed invention materially contributes under category (A) or (B), the petition must be accompanied by

a statement by the applicant, assignee, or an attorney/agent registered to practice before the Office explaining how the materiality standard is met. 5) A statement that applicant will agree to make an election without traverse in a telephonic interview if a restriction requirement is made by the examiner. 6) The petition to make special must be filed electronically. 7) The petition must be filed at least one day prior to the date that a first Office Action appears in the Patent Application Information Retrieval (PAIR) system. 8) The petition must be accompanied by a request for early publication in compliance with 37 CFR 1.219 and include the publication fee as set forth in 37 CFR 1.18(d).

The requirement for a fee for consideration of the petition to make special for applications pertaining to Green Technologies has been waived. The petition lacks item # 4.

In regard to item 4, petitioner should note that the instant petition includes a statement identifying the basis for the special status (i.e., whether the instant invention (1) materially enhances the quality of the environment or materially contributes to (2) development of renewable energy resources or energy conservation, or (3) greenhouse gas reduction) as required by sections II and III of the notice. However, as stated in the notice, applicant must also provide a statement pertaining to the materiality standard if the application disclosure is not clear on its face as to the materiality of the basis for the special status of the invention. This petition lacks such a statement and it is not agreed that the application on its face meets that materiality standard. Petitioner states that the claimed invention relates to green technology. This is not convincing. It is not clear how the claimed economy mode with gas tank is almost empty, e.g. use less fuel with no excessive acceleration, will provide and enhance the quality of the environment or contribute to development of renewable energy resources or energy conservation or greenhouse gas reduction. There is no relationship between the statement and the claimed subject matter. It is a known concept to drive slow by using less gas and get more distance from a tank of gas.

Any reconsideration of this decision should be submitted through the USPTO electronic filing system, EFS-Web, and selecting the document description of "Petition for Green Tech Pilot" on the EFS-Web screen.

Telephone inquiries concerning this decision should be directed to Henry C. Yuen at 571-272-4856.

The application will be forwarded to the Technology Center Art Unit 3747 for action in its regular turn.

/Henry C. Yuen/

Henry C. Yuen
Quality Assurance Specialist
Technology Center 3700

IN THE UNITED STATES PATENT AND TRADEMARK OFFICE

In re application of:

DALE SCOTT CROMBEZ

Group Art Unit: 3747

Examiner: Henry C. Yuen

Serial No.: 13/029,547

Filed: February 17, 2011

For: METHOD AND SYSTEM FOR EXTENDING AN OPERATING RANGE OF A MOTOR VEHICLE

Attorney Docket No.: 83165719 (FMC3409PUS)

REQUEST FOR RECONSIDERATION OF DECISION ON PETITION FOR THE GREEN TECHNOLOGY PILOT PROGRAM

Commissioner for Patents
U.S. Patent and Trademark Office
P.O. Box 1450
Alexandria, VA 22313-1450

Dear Sir:

In response to the Decision on the Petition mailed April 21, 2011, Applicant respectfully requests reconsideration of that Petition filed March 18, 2011 for the reasons stated herein.

In the decision dismissing the Petition, the Examiner stated that the Petition lacked a statement pertaining to the materiality standard if the application disclosure is not clear on its face as to the materiality of the basis for the special status of the invention. As well, the Examiner indicated his disagreement with the Applicant's submission that it is clear on the face of the present application that the claimed invention materially contributes to the more efficient utilization and conservation of energy resources or the reduction of greenhouse gas emissions.

In response, the Applicant respectfully disagrees and re-iterates that the present application is clear on its face that the claimed invention materially contributes to the more efficient utilization and conservation of energy resources or the reduction of greenhouse gas emissions. In that regard, the Applicant respectfully directs the Examiner's attention to the title

of the present application, namely, "Method and System for Extending the Operating Range of a Motor Vehicle." As is readily apparent from that title, the claimed method and system of the present application extend the operating range of a motor vehicle, thereby improving vehicle fuel efficiency which results in the use of less fuel. Improved fuel efficiency and reduced fuel use clearly meet the materiality standard of more efficient utilization and conservation of energy resources.

Nevertheless, a revised statement in support of the materiality standard is filed herewith. That revised statement includes references to the specification and claims further supporting that the claimed invention is clearly eligible for the "Green Technology Pilot Program" as materially contributing to the more efficient utilization and conservation of energy resources or the reduction of greenhouse gas emissions.

Accordingly, the Applicant respectfully requests reconsideration of the Decision and granting of the Petition. No additional fee is believed to be due. However, please charge any additional required fees to Deposit Account No. 06-1510 (Ford Global Technologies, LLC).

Respectfully submitted,

DALE SCOTT CROMBEZ

By: /Jeffrey M. Szuma/
Jeffrey M. Szuma
Reg. No. 35,700
Attorney for Applicant

Date: May 23, 2011

BROOKS KUSHMAN P.C.
1000 Town Center, 22nd Floor
Southfield, MI 48075-1238
Phone: 248-358-4400
Fax: 248-358-3351

IN THE UNITED STATES PATENT AND TRADEMARK OFFICE

In re application of:

DALE SCOTT CROMBEZ

Group Art Unit: 3747

Examiner: Henry C. Yuen

Serial No.: 13/029,547

Filed: February 17, 2011

For: METHOD AND SYSTEM FOR EXTENDING AN OPERATING RANGE OF A MOTOR VEHICLE

Attorney Docket No.: 83165719 (FMC3409US)

REVISED STATEMENT SUPPORTING ELIGIBILITY REQUIREMENT FOR GREEN TECHNOLOGY PILOT PROGRAM

Commissioner for Patents
U.S. Patent and Trademark Office
P.O. Box 1450
Alexandria, VA 22313-1450

Dear Sir:

This Revised Statement Supporting the Eligibility Requirement is being filed concurrently with a Request for Reconsideration of Decision on Petition To Make Special Under the Green Technology Pilot Program (PTO/SB/420), and pursuant to the requirements of 74 Fed. Reg. 64,666 (Dec. 8, 2009), as amended by 75 Fed. Reg. 28, 554 (May 21, 2010) and 75 Fed. Reg. 68049 (Nov. 10, 2010).

Applicant respectfully submits that the above-identified application is eligible for the "Green Technology Pilot Program" as materially contributing to the more efficient utilization and conservation of energy resources or the reduction of greenhouse gas emissions.

As set forth in the specification of the present application, many automotive vehicles, especially alternative fuel powered vehicles, are increasingly equipped to provide users with driving or operating modes that attempt to optimize fuel economy. Such driving or operating

modes may be referred to as "economy" or "econ" modes of vehicle operation. An economy mode of vehicle operation may include several changes to the driving or operating behavior of the vehicle. Such changes may include, but are not limited to, limiting the speed of the vehicle, limiting the acceleration of the vehicle, modifying vehicle acceleration response characteristics, and limiting, changing or altering the settings of the climate control system of the vehicle. By improving fuel economy, these types of changes can help to extend the operating range of the vehicle. (*See, e.g.*, Specification, ¶¶ [0003-0004, 0016].)

A problem associated with alternative fuel powered vehicles is that there are fewer fuel stations or locations than for gasoline or diesel fuel powered vehicles. This can make it difficult for a user of an alternative fuel powered vehicle to travel or plan trips without having to consider vehicle range and the locations of alternative fuel stations. A similar situation may also exist in rural, sparsely populated, or less developed geographic areas with respect to conventional fuel stations for gasoline or diesel, where the number of fuel stations may be limited and those stations may be located at great distances from one another. As well, a problem associated with economy mode vehicle operation is that the vehicle user or driver is required to manually select the economy operating mode, such as by actuating a "button" or other device in the vehicle. (*See, e.g.*, Specification, ¶ [0005, 0017-0018].)

The claimed invention provides a method and system for extending an operating range of a motor vehicle, such as a vehicle for use with an alternative fuel, whereby an economy mode of vehicle operation may be entered automatically based on an estimated vehicle range and an estimated distance to a fuel location, thereby assisting a vehicle driver or user to reach a fuel station. That method and system, however, still provide the vehicle driver or user the ability to manually control the vehicle operating mode as between an economy mode and other modes of operation. (*See, e.g.*, Specification, ¶¶ [0006, 0018, 0043].)

As set forth in independent claim 1, a method is provided for extending an operating range of a motor vehicle for use with an alternative fuel, where the vehicle has a first mode of operation and an economy mode of operation. The method comprises estimating a vehicle range based on a vehicle fuel level and the first mode of vehicle operation, and estimating a distance to a fuel location. The method further comprises automatically entering the economy mode of

vehicle operation a predetermined period of time after the estimated vehicle range decreases to within a predetermined threshold of the estimated distance to a fuel location.

Similarly, as set forth in independent claim 8, a system is provided for extending an operating range of a motor vehicle for use with an alternative fuel, where the vehicle has a first mode of operation and an economy mode of operation. The system comprises a controller configured to estimate a vehicle range based on a vehicle fuel level and the first mode of vehicle operation, and to estimate a distance to a fuel location. The controller is also configured to generate an entry command signal for use in automatically entering the economy mode of vehicle operation after the estimated vehicle range decreases to within a predetermined threshold of the estimated distance to a fuel location.

As set forth in independent claim 15, a system is provided for extending an operating range of a motor vehicle, the vehicle having a first mode of operation and a second mode of operation. The system comprises a controller configured to estimate a vehicle range based on a vehicle fuel level and the first mode of vehicle operation, and to estimate a distance to a fuel location. The controller is also configured to generate, when the estimated vehicle range decreases to within a predetermined range the estimated distance to a fuel location, an information signal for use in providing an indication to a vehicle user that the vehicle will enter the second mode of vehicle operation. The controller is further configured to generate, if the user fails to provide a command to refrain from entering the second mode of operation during a predetermined period of time after generating the information signal for use in providing the indication to the vehicle user, an entry command signal for use in automatically entering the second mode of vehicle operation. The controller is still further configured to generate an exit command signal for use in exiting the second mode of vehicle operation in response to a user command to exit the second mode of vehicle operation.

In view of the foregoing, the Applicant respectfully submits that the present application satisfies the requirements and is eligible for the "Green Technology Pilot Program." More specifically, the claimed invention of the present application extends the operating range of a motor vehicle, thereby improving fuel efficiency and resulting in the use of less fuel. As a result,

the claimed invention materially contributes to the more efficient utilization and conservation of energy resources or the reduction of greenhouse gas emissions.

The Application is a non-reissue, non-provisional utility application filed under 35 U.S.C. §111(a). The Application contains no more than three (3) independent claims and twenty (20) total claims. The Application does not contain multiple dependent claims. A first Office action has not yet appeared in the Patent Application Information Retrieval System (PAIR).

The publication fee under 37 C.F.R. § 1.18(d) of $300 has previously been paid. Please charge any additional required fees to Deposit Account No. 06-1510 (Ford Global Technologies, LLC).

Respectfully submitted,

DALE S. CROMBEZ

By: /Jeffrey M. Szuma/
Jeffrey M. Szuma
Reg. No. 35,700
Attorney/Agent for Applicant

Date: May 23, 2011

BROOKS KUSHMAN P.C.
1000 Town Center, 22nd Floor
Southfield, MI 48075-1238
Phone: 248-358-4400
Fax: 248-358-3351

UNITED STATES PATENT AND TRADEMARK OFFICE

UNITED STATES DEPARTMENT OF COMMERCE
United States Patent and Trademark Office
Address: COMMISSIONER FOR PATENTS
P.O. Box 1450
Alexandria, Virginia 22313-1450
www.uspto.gov

APPLICATION NO.	FILING DATE	FIRST NAMED INVENTOR	ATTORNEY DOCKET NO.	CONFIRMATION NO.
13/029,547	02/17/2011	Dale Scott Crombez	83165719	1926

28395 7590 07/01/2011
BROOKS KUSHMAN P.C./FGTL
1000 TOWN CENTER
22ND FLOOR
SOUTHFIELD, MI 48075-1238

EXAMINER
KIM, KYUNG J

ART UNIT	PAPER NUMBER
3665	

MAIL DATE	DELIVERY MODE
07/01/2011	PAPER

Please find below and/or attached an Office communication concerning this application or proceeding.

The time period for reply, if any, is set in the attached communication.

UNITED STATES PATENT AND TRADEMARK OFFICE

Commissioner for Patents
United States Patent and Trademark Office
P.O. Box 1450
Alexandria, VA 22313-1450
www.uspto.gov

7/1/11

BROOKS KUSHMAN P.C./FGTL
1000 TOWN CENTER
22ND FLOOR
SOUTHFIELD MI 48075-1238

In re Application of	:	
Crombez	:	DECISION ON PETITION
Application No. 13/029,547	:	TO MAKE SPECIAL UNDER
Filed: 2/17/2011	:	THE GREEN TECHNOLOGY
Attorney Docket No. **83165719**	:	PILOT PROGRAM

This is a decision on the request for reconsideration, filed 5/23/2011, to make the above-identified application special under the pilot program for applications pertaining to Green Technologies as set forth in 74 Federal Register Notice 64666 (December 8, 2009) and amended by 75 Federal Register Notice 28554 (May 21, 2010) and 75 Federal Register Notice 69049 (November 10, 2010).

The petition is **GRANTED**.

A grantable petition to make an application special under 37 CFR 1.102 and the pilot program as set forth in 74 FR 64666 must be directed to a nonprovisional application filed under 35 USC 111(a) or be a national stage entry under 35 USC 371, exclusive of any reissue applications.

In order to qualify for special status, the following requirements must be met. 1) The application must have no more than 3 independent claims and no more than 20 total claims. 2) The application must not contain any multiple dependent claims. 3) The petition must state the basis for seeking special status, i.e., the claimed invention either: A) materially enhances the quality of the environment or B) materially contributes to: i) the discovery or development of renewable energy resources, ii) the more efficient utilization and conservation of energy resources, or iii) greenhouse gas emission reduction. 4) If the disclosure is not clear on its face that the claimed invention materially contributes under category (A) or (B), the petition must be accompanied by a statement by the applicant, assignee, or an attorney/agent registered to practice before the Office explaining how the materiality standard is met. 5) A statement that applicant will agree to make an election without traverse in a telephonic interview if a restriction requirement is made by the examiner. 6) The petition to make special must be filed electronically. 7) The petition must be filed at least one day prior to the date that a first Office Action appears in the Patent Application Information Retrieval (PAIR) system. 8) The petition must be accompanied by a

request for early publication in compliance with 37 CFR 1.219 and include the publication fee as set forth in 37 CFR 1.18(d).

The requirement for a fee for consideration of the petition to make special for applications pertaining to Green Technologies has been waived.

The instant petition complies with items 1 – 8 above. Accordingly, the above-identified application has been accorded "special" status.

Telephone inquires concerning this decision should be directed to Tom Dunn at 571-272-1171.

The application is being forwarded to the Technology Center Art Unit 3665 for action on the merits commensurate with this decision.

/Tom Dunn/

Tom Dunn
Quality Assurance Specialist
Technology Center 1700

UNITED STATES PATENT AND TRADEMARK OFFICE

Commissioner for Patents
United States Patent and Trademark Office
P.O. Box 1450

MAILED
FEB 23 2012
OFFICE OF PETITIONS

DRINKER BIDDLE & REATH (DC)
1500 K STREET, N.W.
SUITE 1100
WASHINGTON DC 20005-1209

In re Application of	: DECISION ON REQUEST TO
Tetsuaki KATO et al.	: PARTICIPATE IN PPH PROGRAM
Application No. 13/029,550	: AND PETITION TO MAKE SPECIAL
Filed: February 17, 2011	: UNDER 37 CFR 1.102(a)
Atty. Docket No.: 047260-5133 (465669)	:

For: ROBOT HAVING LEARNING CONTROL FUNCTION

This is a decision on the request to participate in the Patent Prosecution Highway (PPH) program and the petition under 37 CFR 1.102(a), filed January 25, 2012 to make the above-identified application special.

The petition and request are **GRANTED**.

A grantable request to participate in the PPH (patent prosecution highway) program and petition to make special require:

(1) the U.S. application is a Paris Convention application which either validly claims priority under 35 U.S.C. 119(a) and 37 CFR 1.55 to one or more applications filed in the JPO (Japanese Patent Office) or claims priority to a PCT application that contains no priority claims. Alternatively, it can be a national stage application under the PCT which validly claims priority to an application filed in the JPO or claims priority to a PCT application that contains no priority claims. It can also be a "bypass application" filed under 35 U.S.C. 111(a) which validly claims benefit under 35 U.S.C. 120 to a PCT application, which PCT application validly claims priority to an application filed in the JPO or claims priority to a PCT application that contains no priority claims, or contains no priority claim;

(2) applicant must submit a copy of the allowable/patentable claim(s) from the JPO application(s) along with an English translation thereof and a statement that the English translation is accurate;

(3) all the claims in the U.S. application must sufficiently correspond or be amended to sufficiently correspond to the allowable/patentable claim(s) in the JPO application(s);

(4) examination of the U.S. application has not begun;

(5) applicant must submit a copy of all the office actions from each of the JPO application(s) containing the allowability/patentable claim(s) along with an English translation thereof and a statement that the English translation is accurate; and

(6) applicant must submit an IDS listing the documents cited by the JPO examiner in the JPO office action along with copies of documents except U.S. patents or U.S. patent application publications.

The request to participate in the PPH program and petition comply with the above requirements. Accordingly, the above-identified application has been accorded "special" status.

Telephone inquiries concerning this decision should be directed to Robert DeWitty, Petition Attorney, Office of Petitions at 571-272-8427.

All other inquiries concerning the examination or status of the application is accessible in the PAIR system at http://www.uspto.gov/ebc/index.html.

This application will be forwarded to Technology Center Art Unit 3664 for action commensurate with this decision.

Thurman K. Page

David Bucci
Petitions Examiner
Office of Petitions

UNITED STATES PATENT AND TRADEMARK OFFICE

Commissioner for Patents
United States Patent and Trademark Office
P.O. Box 1450
Alexandria, VA 22313-1450
www.uspto.gov

STETINA BRUNDA GARRED & BRUCKER
75 ENTERPRISE, SUITE 250
ALISO VIEJO CA 92656

MAILED
APR 16 2012
OFFICE OF PETITIONS

In re Application of	:	
Ziming He et al	:	
Application No. 13/029,554	:	DECISION ON PETITION
Filed: February 17, 2011	:	TO WITHDRAW
Attorney Docket No. RFTEL-007A	:	FROM RECORD
	:	

This is a decision on the Request to Withdraw as attorney or agent of record under 37 CFR § 1.36(b), filed March 16, 2012.

The request is **NOT APPROVED**.

The request cannot be approved because the requested change in the correspondence address is improper.

The Office will only accept correspondence address changes to the most current address information provided for the assignee of the entire interest *who properly became of record under 37 CFR 3.71,* or, if no assignee of the entire interest has properly been made of record, the most current address information provided for the first named inventor. 37 CFR 3.71(c) states:

> ***An assignee becomes of record either in a national patent application or a reexamination proceeding by filing a statement in compliance with § 3.73(b) that is signed by a party who is authorized to act on behalf of the assignee.***

Therefore, as there is currently no Statement under 37 CFR 3.73(b) with the current assignee information of record in the instant application, the Office cannot change the correspondence address to the address on the Request to Withdraw at this present time.

All future communications from the Office will continue to be directed to the above-listed address until otherwise notified by applicant.

Telephone inquires concerning this decision should be directed to Irvin Dingle at (571) 272-3210.

Irvin Dingle
Petitions Examiner
Office of Petitions

PTO/SB/20PCT-KR (06-10)
Approved for use through 01/31/2012. OMB 0651-0058
U.S. Patent and Trademark Office; U. S. DEPARTMENT OF COMMERCE
Under the Paperwork Reduction Act of 1995, no persons are required to respond to a collection of information unless it displays a valid OMB control number.

REQUEST FOR PARTICIPATION IN THE PATENT COOPERATION TREATY - PATENT PROSECUTION HIGHWAY (PCT-PPH) PILOT PROGRAM BETWEEN THE KOREAN INTELLECTUAL PROPERTY OFFICE (KIPO) AND THE USPTO

Application No:	13/029,598	Filing date:	February 17, 2011
First Named Inventor:	Dennis Lopez		
Title of the Invention:	EQUIPMENT STORAGE DEVICE WITH INTEGRATED COOLER		

THIS REQUEST FOR PARTICIPATION IN THE PCT-PPH PILOT PROGRAM ALONG WITH THE REQUIRED DOCUMENTS MUST BE SUBMITTED VIA EFS-WEB. INFORMATION REGARDING EFS-WEB IS AVAILABLE AT HTTP://WWW.USPTO.GOV/EBC/EFS_HELP.HTML

APPLICANT HEREBY REQUESTS PARTICIPATION IN THE PCT-PPH PROGRAM AND PETITIONS TO MAKE THE ABOVE-IDENTIFIED APPLICATION SPECIAL UNDER THE PCT-PPH PROGRAM.

The above-identified application is (1) a national stage entry of the corresponding PCT application, or (2) a national stage entry of another PCT application which claims priority to the corresponding PCT application, or (3) a national application that claims domestic/ foreign priority to the corresponding PCT application, or (4) a national application which forms the basis for the priority claim in the corresponding PCT application, or (5) a continuing application of a U.S. application that satisfies one of (1) to (4) above, or (6) a U.S. application that claims domestic benefit to a U.S. provisional application which forms the basis for the priority claim in the corresponding PCT application.

The corresponding PCT application number(s) is/are: PCT/US2011/027079

The international filing date of the corresponding PCT application(s) is/are: March 3, 2011

I. List of Required Documents:

a. **A copy of the latest international work product (WO/ISA, WO/IPEA, or IPER) in the above–identified corresponding PCT application(s)**

- [x] Is attached.
- [ ] Is not attached because the document is already in the U.S. application.

b. **A copy of all claims which were indicated as having novelty, inventive step and industrial applicability in the above-identified corresponding PCT application(s).**

- [ ] Is attached.
- [x] Is not attached because the document is already in the U.S. application.

c. **English translations of the documents in a. and b. above are attached (if the documents are not in the English language). A statement that the English translation is accurate is attached for the document in b. above.**

This collection of information is required by 35 U.S.C. 119, 37 CFR 1.55, and 37 CFR 1.102(d). The information is required to obtain or retain a benefit by the public, which is to file (and by the USPTO to process) an application. Confidentiality is governed by 35 U.S.C. 122 and 37 CFR 1.11 and 1.14. This collection is estimated to take 2 hours to complete, including gathering, preparing, and submitting the completed application form to the USPTO. Time will vary depending upon the individual case. Any comments on the amount of time you require to complete this form and/or suggestions for reducing this burden should be sent to the Chief Information Officer, U.S. Patent and Trademark Office, U.S. Department of Commerce, P.O. Box 1450, Alexandria, VA 22313-1450. DO NOT SEND FEES OR COMPLETED FORMS TO THIS ADDRESS.

Approved for use through 01/31/2012. OMB 0651-0058
U.S.Patent and Trademark Office; U.S. DEPARTMENT OF COMMERCE
Under the Paperwork Reduction Act of 1995, no persons are required to respond to a collection of information unless it displays a valid OMB control number.

REQUEST FOR PARTICIPATION IN THE PCT-PPH PILOT PROGRAM BETWEEN THE KIPO AND THE USPTO

(continued)

Application No.:	13/029,598
First Named Inventor:	Dennis Lopez

d. **(1) An information disclosure statement listing the documents cited in the international work products (ISR, WO/ISA, WO/IPEA, IPER) of the corresponding PCT application.**

- [✔] Is attached
- [ ] Has already been filed in the above-identified U.S. application on _____

(2) Copies of all documents (except) for U.S. patents or U.S. patent application publications)

- [✔] Are attached.
- [ ] Have already been filed in the above-identified U.S. application on _____

II. Claims Correspondence Table:

Claims in US Application	Patentable Claims in the corresponding PCT Application	Explanation regarding the correspondence
1-19	1-19	Claims are identical

III. All the claims in the US application sufficiently correspond to the patentable claims in the corresponding PCT application.

Signature /Bryan J. Massey/	Date 2012-02-07
Name (Print/Typed) Bryan J. Massey	Registration Number 60445

Privacy Act Statement

The **Privacy Act of 1974 (P.L. 93-579)** requires that you be given certain information in connection with your submission of the attached form related to a patent application or patent. Accordingly, pursuant to the requirements of the Act, please be advised that: (1) the general authority for the collection of this information is 35 U.S.C. 2(b)(2); (2) furnishing of the information solicited is voluntary; and (3) the principal purpose for which the information is used by the U.S. Patent and Trademark Office is to process and/or examine your submission related to a patent application or patent. If you do not furnish the requested information, the U.S. Patent and Trademark Office may not be able to process and/or examine your submission, which may result in termination of proceedings or abandonment of the application or expiration of the patent.

The information provided by you in this form will be subject to the following routine uses:

1. The information on this form will be treated confidentially to the extent allowed under the Freedom of Information Act (5 U.S.C. 552) and the Privacy Act (5 U.S.C 552a). Records from this system of records may be disclosed to the Department of Justice to determine whether disclosure of these records is required by the Freedom of Information Act.
2. A record from this system of records may be disclosed, as a routine use, in the course of presenting evidence to a court, magistrate, or administrative tribunal, including disclosures to opposing counsel in the course of settlement negotiations.
3. A record in this system of records may be disclosed, as a routine use, to a Member of Congress submitting a request involving an individual, to whom the record pertains, when the individual has requested assistance from the Member with respect to the subject matter of the record.
4. A record in this system of records may be disclosed, as a routine use, to a contractor of the Agency having need for the information in order to perform a contract. Recipients of information shall be required to comply with the requirements of the Privacy Act of 1974, as amended, pursuant to 5 U.S.C. 552a(m).
5. A record related to an International Application filed under the Patent Cooperation Treaty in this system of records may be disclosed, as a routine use, to the International Bureau of the World Intellectual Property Organization, pursuant to the Patent Cooperation Treaty.
6. A record in this system of records may be disclosed, as a routine use, to another federal agency for purposes of National Security review (35 U.S.C. 181) and for review pursuant to the Atomic Energy Act (42 U.S.C. 218(c)).
7. A record from this system of records may be disclosed, as a routine use, to the Administrator, General Services, or his/her designee, during an inspection of records conducted by GSA as part of that agency's responsibility to recommend improvements in records management practices and programs, under authority of 44 U.S.C. 2904 and 2906. Such disclosure shall be made in accordance with the GSA regulations governing inspection of records for this purpose, and any other relevant (*i.e.*, GSA or Commerce) directive. Such disclosure shall not be used to make determinations about individuals.
8. A record from this system of records may be disclosed, as a routine use, to the public after either publication of the application pursuant to 35 U.S.C. 122(b) or issuance of a patent pursuant to 35 U.S.C. 151. Further, a record may be disclosed, subject to the limitations of 37 CFR 1.14, as a routine use, to the public if the record was filed in an application which became abandoned or in which the proceedings were terminated and which application is referenced by either a published application, an application open to public inspection or an issued patent.
9. A record from this system of records may be disclosed, as a routine use, to a Federal, State, or local law enforcement agency, if the USPTO becomes aware of a violation or potential violation of law or regulation.

UNITED STATES PATENT AND TRADEMARK OFFICE

Commissioner for Patents
United States Patent and Trademark Office
P.O. Box 1450
Alexandria, VA 22313-1450
www.uspto.gov

Kunzler Needham Massey & Thorpe
8 EAST BROADWAY
SUITE 600
SALT LAKE CITY UT 84111

MAILED
APR 06 2012
OFFICE OF PETITIONS

In re Application of
Dennis Lopez
Application No.: 13/029,598
Filed: February 17, 2011
Attorney Docket No.: 2849.2.1
For: Equipment Storage Device with Integrated Cooler

: DECISION ON REQUEST TO
: PARTICIPATE IN THE PATENT
: PROSECUTION HIGHWAY
: PROGRAM AND PETITION
: TO MAKE SPECIAL UNDER
: 37 CFR 1.102(a)

This is a decision on the request to participate in the PCT Patent Prosecution Highway (PCT-PPH) pilot program and the petition under 37 CFR 1.102(a), filed on February 7, 2012, to make the above-identified application special.

The request and petition are **GRANTED**.

Discussion

A grantable request to participate in the PCT-PPH pilot program and petition to make special require:

1) The U.S. application must have an eligible relationship to one or more PCT applications where the ISA or IPEA are Australia, Austria, China, EPO, Finland, JPO, Korea, NPI, Russia, Spain, Sweden and the USPTO;

(2) At least one claim in the PCT application has novelty, inventive step, and industrial applicability and must be free of any observations in Box VIII in the latest work product in the international stage or applicant must identify and explain why the claim(s) is/are not subject to the observation in Box VIII;

(3) Applicant must submit a copy of the claim(s) from the PCT application(s) that have novelty, inventive step, and industrial applicability along with an English translation thereof and a statement that the English translation is accurate, if the claims are not in the English language;

(4) All the claims in the U.S. application must sufficiently correspond or be amended to sufficiently correspond to the claim(s) that have novelty, inventive step, and industrial applicability in the PCT application(s);

(5) Examination of the U.S. application has not begun;

(6) Applicant must submit a copy of the latest international work product from the PCT application indicating that the claim(s) have novelty, inventive step, and industrial applicability along with an English translation thereof and a statement that the English translation is accurate if the latest international work product is not in the English language;

(7) Applicant must submit an IDS listing the documents cited by the PCT examiner in the international work product along with copies of documents except U.S. patents or U.S. patent application publications.

The request to participate in the PCT-PPH pilot program and petition comply with the above requirements. Accordingly, the above-identified application has been accorded "special" status.

Telephone inquiries concerning this decision should be directed to Kimberly Inabinet at 571-272-4618.

All other inquiries concerning the examination or status of the application is accessible in the PAIR system at http://www.uspto.gov/ebc.index.html.

This application will be forwarded to the examiner for action on the merits commensurate with this decision.

Thurman K. Page

Thurman K. Page
Petitions Examiner
Office of Petitions

UNITED STATES PATENT AND TRADEMARK OFFICE

Commissioner for Patents
United States Patent and Trademark Office
P.O. Box 1450
Alexandria, VA 22313-1450
www.uspto.gov

DRINKER BIDDLE & REATH (DC)
1500 K STREET, N.W.
SUITE 1100
WASHINGTON DC 20005-1209

MAILED
MAR 15 2012
OFFICE OF PETITIONS

In re Application of
Tetsuaki Kato, et al.
Application No.: 13/029,641
Filed: February 17, 2011
Attorney Docket No.: 047260-5135
(465978)
For: ROBOT WITH LEARNING
CONTROL FUNCTION

: REQUEST TO
: PARTICIPATE IN THE PATENT
: PROSECUTION HIGHWAY
: PROGRAM AND PETITION
: TO MAKE SPECIAL UNDER
: 37 CFR 1.102(a)

This is a decision on the request to participate in the Patent Prosecution Highway (PPH) program and the petition under 37 CFR 1.102(a), filed, January 11, 2012 to make the above-identified application special.

The request and petition are **GRANTED**.

Discussion

A grantable request to participate in the PPH pilot program and petition to make special require:

1. The U.S. application is

    a. a Paris Convention application which either
        i. validly claims priority under 35 U.S.C. 119(a) and 37 CFR 1.55 to one or more applications filed in the JPO, or
        ii. validly claims priority to a PCT application that contains no priority claims, or
    b. a national stage application under the PCT (an application which entered the national stage in the U.S. from a PCT international application after compliance with 35 U.S.C. 371), which PCT application
        i. validly claims priority to an application filed in the JPO, or
        ii. validly claims priority to a PCT application that contains no priority claims, or
        iii. contains no priority claim, or
    c. a so-called bypass application filed under 35 U.S.C. 111(a) which validly claims benefit under 35 U.S.C. 120 to a PCT application, which PCT application
        i. validly claims priority to an application filed in the JPO, or

ii. validly claims priority to a PCT application that contains no priority claims, or
iii. contains no priority claim;

2. Applicant must submit a copy of:
   a. The allowable/patentable claim(s) from the JPO application(s);
   b. An English translation of the allowable/patentable claim(s) and
   c. A statement that the English translation is accurate;
3. Applicant must:
   a. Ensure all the claims in the U.S. application must sufficiently correspond or be amended to sufficiently correspond to the allowable/patentable claim(s) in the JPO application(s) and
   b. Submit a claims correspondence table in English;
4. Examination of the U.S. application has not begun;
5. Applicant must submit:
   a. Documentation of prior office action:
      i. a copy of the office action(s) just prior to the "Decision to Grant a Patent" from each of the JPO application(s) containing the allowable/patentable claim(s) or
      ii. if the allowable/patentable claims(s) are from a "Notification of Reasons for Refusal" then the Notification of Reasons for Refusal or
      iii. if the JPO application is a first action allowance then no office action from the JPO is necessary should be indicated on the request/petition form;
   b. An English language translation of the JPO Office action from (5)(a)(i)-(ii) above
   c. A statement that the English translation is accurate;
6. Applicant must submit:
   a. An IDS listing the documents cited by the JPO examiner in the JPO office action (unless already submitted in this application)
   b. Copies of the documents except U.S. patents or U.S. patent application publications (unless already submitted in this application);

The request to participate in the PPH pilot program and petition comply with the above requirements. Accordingly, the above-identified application has been accorded "special" status.

Inquiries concerning this decision should be directed to Terri Johnson at 571-272-2991.

All other inquiries concerning the examination or status of the application is accessible in the PAIR system at http://www.uspto.gov/ebc.index.html.

This application will be forwarded to the examiner for action on the merits commensurate with this decision after the formalities review has been completed.

David Buccei
Petitions Examiner
Office of Petitions

Doc Code: PET.GREEN
Document Description: Petition for Green Tech Pilot

PTO/SB/420 (03-11)

PETITION TO MAKE SPECIAL UNDER THE GREEN TECHNOLOGY PILOT PROGRAM

Attorney Docket Number: 10694.00091.US00	Application Number (if known): 13/029,685	Filing date: February 17, 2011

First Named Inventor: Sun Kyung Kim

Title: Light Emitting Device, Light Emitting Device Package and Lighting System

APPLICANT HEREBY REQUESTS TO PARTICIPATE IN THE GREEN TECHNOLOGY PILOT PROGRAM FOR THE ABOVE-IDENTIFIED APPLICATION. See Instruction Sheet on page 2.

This petition must be timely filed electronically using the USPTO electronic filing system, EFS-Web.

1. By filing this petition:

   Applicant is requesting early publication: Applicant hereby requests early publication under 37 CFR 1.219 and the publication fee set forth in 37 CFR 1.18(d) accompanies this request.

2. By filing this petition: applicant is agreeing to make an election without traverse in a telephonic interview and elect an invention that meets the eligibility requirements for the Green Technology Pilot Program, if the Office determines that the claims are not obviously directed to a single invention. See Instruction Sheet.

3. This request is accompanied by statements of special status for the eligibility requirement.

4. The application contains no more than three (3) independent claims and twenty (20) total claims.

5. The application does not contain any multiple dependent claims.

6. Other attachments: Statement In Support of Petition to Make Special

Signature /Randall C. Pyles/	Date May 19, 2011
Name (Print/Typed) Randall C. Pyles	Registration Number 66,523

Note: *Signatures of all the inventors or assignees of record of the entire interest or their representative(s) are required in accordance with 37 CFR 1.33 and 11.18. Please see 37 CFR 1.4(d) for the form of the signature. If necessary, submit multiple forms for more than one signature, see below*.*

■ *Total of 1 forms are submitted.

If you need assistance in completing the form, call 1-800-PTO-9199 and select option 2.

Docket No.: 10694.00091.US00
(PATENT)

IN THE UNITED STATES PATENT AND TRADEMARK OFFICE

In re Patent Application of: KIM, Sun Kyung	Customer No.: 30827
Application No.: 13/029,685	Confirmation No.:1155
Filed: February 17, 2011	Art Unit: TBA
For: LIGHT EMITTING DEVICE, LIGHT EMITTING DEVICE PACKAGE, AND LIGHTING SYSTEM	Examiner: TBA

MS Petitions
Commissioner for Patents
P.O. Box 1450
Alexandria, VA 22313-1450

STATEMENT IN SUPPORT OF PETITION TO MAKE SPECIAL UNDER THE GREEN TECHNOLOGY PILOT PROGRAM

Sir:

This Statement of Special Status is filed in conjunction with a Petition to Make Special Under the Green Technology Pilot Program.

The above-referenced application pertains to environmental quality, i.e. enhancing the quality of the environment by using light emitting diode (LED). Special status is sought because the invention materially contributes to the more efficient utilization and conservation of energy resources by using LED which provides lower power consumption, a longer life span and significant energy saving.

Dated: May 19, 2011

Respectfully submitted,

By /Randall C. Pyles/

Randall C. Pyles
Registration No.: 66,523
McKENNA LONG & ALDRIDGE LLP
1900 K Street, N.W.
Washington, DC 20006
(202) 496-7500
Attorneys for Applicant

UNITED STATES PATENT AND TRADEMARK OFFICE

UNITED STATES DEPARTMENT OF COMMERCE
United States Patent and Trademark Office
Address: COMMISSIONER FOR PATENTS
P.O. Box 1450
Alexandria, Virginia 22313-1450
www.uspto.gov

APPLICATION NO.	FILING DATE	FIRST NAMED INVENTOR	ATTORNEY DOCKET NO.	CONFIRMATION NO.
13/029,685	02/17/2011	Sun Kyung Kim	10694.00091.US00	1155

30827 7590 05/26/2011
MCKENNA LONG & ALDRIDGE LLP
1900 K STREET, NW
WASHINGTON, DC 20006

EXAMINER

ART UNIT	PAPER NUMBER
2811	

MAIL DATE	DELIVERY MODE
05/26/2011	PAPER

Please find below and/or attached an Office communication concerning this application or proceeding.

The time period for reply, if any, is set in the attached communication.

UNITED STATES PATENT AND TRADEMARK OFFICE

Commissioner for Patents
United States Patent and Trademark Office
P.O. Box 1450
Alexandria, VA 22313-1450
www.uspto.gov

MCKENNA LONG & ALDRIDGE LLP
1900 K STREET, NW
WASHINGTON DC 20006

In re Application of	:	
Sun Kyung KIM	:	DECISION ON PETITION
Application No. 13/029,685	:	TO MAKE SPECIAL UNDER
Filed: February 17, 2011	:	THE GREEN TECHNOLOGY
Attorney Docket No. 10694.00091.US00	:	PILOT PROGRAM

This is a decision on the petition under 37 CFR 1.102, filed on May 19, 2011, to make the above-identified application special under the pilot program for applications pertaining to Green Technologies as set forth 74 Federal Register Notice 64666 (December 8, 2009) and amended by 75 Federal Register Notice 28554 (May 21, 2010) and 75 Federal Register Notice 69049 (November 10, 2010).

The petition is **GRANTED**.

A grantable petition to make an application special under 37 CFR 1.102 and the pilot program as set forth in 74 FR 64666 must be directed to a nonprovisional application filed under 35 USC 111(a) or be a national stage entry under 35 USC 371, exclusive of any reissue applications.

In order to qualify for special status, the following requirements must be met. 1) The application must have no more than 3 independent claims and no more than 20 total claims. 2) The application must not contain any multiple dependent claims. 3) The petition must state the basis for seeking special status, i.e., the claimed invention either: A) materially enhances the quality of the environment or B) materially contributes to: i) the discovery or development of renewable energy resources, ii) the more efficient utilization and conservation of energy resources, or iii) greenhouse gas emission reduction. 4) If the disclosure is not clear on its face that the claimed invention materially contributes under category (A) or (B), the petition must be accompanied by a statement by the applicant, assignee, or an attorney/agent registered to practice before the Office explaining how the materiality standard is met. 5) A statement that applicant will agree to make an election without traverse in a telephonic interview if a restriction requirement is made by the examiner. 6) The petition to make special must be filed electronically. 7) The petition must be filed at least one day prior to the date that a first Office Action appears in the Patent Application Information Retrieval (PAIR) system. 8) The petition must be accompanied by a request for early publication in compliance with 37 CFR 1.219 and include the publication fee as set forth in 37 CFR 1.18(d).

The requirement for a fee for consideration of the petition to make special for applications pertaining to Green Technologies has been waived.

The instant petition complies with items 1 – 8 above. Accordingly, the above-identified application has been accorded "special" status.

Telephone inquires concerning this decision should be directed to Lee W. Young at 571-272-4549.

The application is being forwarded to the Technology Center Art Unit 2811 for action on the merits commensurate with this decision.

Lee W. Young
Quality Assurance Specialist
Technology Center 2800

UNITED STATES PATENT AND TRADEMARK OFFICE

Commissioner for Patents
United States Patent and Trademark Office
P.O. Box 1450
Alexandria, VA 22313-1450
www.uspto.gov

MAILED
AUG 05 2011
OFFICE OF PETITIONS

Law Offices of Robert F. Zielinski, LLC
One South Broad Street, Suite 1500
Philadelphia PA 19107

In re Application of	:	
INCIARDI et al.	:	
Application No. 13/029,756	:	ON PETITION
Deposited: February 17, 2011	:	
Attorney Docket No.: MER-20010US	:	

This is in response to the "AMENDMENT AND RESPONSE TO NOTICE OF INCOMPLETE NONPROVISIONAL APPLICATION AND PETITION (UNDER 37 C.F.R. 1.57(a)) TO ENTER INADVERTENTLY OMITTED DRAWINGS" filed March 7, 2011, requesting that the above-referenced application be accorded a filing date of February 17, 2011. This petition is being treated pursuant to 37 CFR 1.53(e)(2)[1].

Application papers in the above-identified application were deposited on February 17, 2011. However, on March 4, 2011, the Office of Patent Application Processing mailed applicants a "Notice of Incomplete Nonprovisional Application," notifying applicants that the application papers had not been accorded a filing date because the application was deposited without drawings. In response, applicants timely filed this petition. Applicants request that the application be amended to include the inadvertently omitted drawings on the basis that the application as filed contained a prior benefit claim under 37 CFR 1.55 or 1.78.

Petitioner's arguments and evidence have been considered. However, a review of the application confirms that, as filed, the application contained at least one method claim. MPEP 601.01(f) provides that:

> It has been USPTO practice to treat an application that contains at least one process or method claim as an application for which a drawing is not necessary for an understanding of the invention under 35 U.S.C. 113 (first sentence).

[1] Any request for review of a notification pursuant to paragraph (e)(1) of this section, or a notification that the original application papers lack a portion of the specification or drawing(s), must be by way of a petition pursuant to this paragraph accompanied by the fee set forth in § 1.17(f). In the absence of a timely (§ 1.181(f)) petition pursuant to this paragraph, the filing date of an application in which the applicant was notified of a filing error pursuant to paragraph (e)(1) of this section will be the date the filing error is corrected.

Thus, pursuant to § 601.01(f), a drawing is not considered essential for a filing date. The instant application is entitled to a filing date without drawings present in the application. Accordingly, the Office should have granted the application a filing date and mailed a Notice of Omitted Items instead of a Notice of Incomplete Nonprovisional Application. As stated in MPEP 601.01(g) under the section entitled, "Application Entitled to a Filing Date," applicant may submit an amendment to include the inadvertently omitted portion of the drawing(s) pursuant to 37 CFR 1.57(a):

> [i]f an application was filed on or after September 21, 2004, and contains a claim under 37 CFR 1.55 for priority of a prior-filed foreign application, or a claim under 37 CFR 1.78 for the benefit of a prior-filed provisional, nonprovisional, or international application that was present on the filing date of the application, and the omitted portion of the drawing(s) was inadvertently omitted from the application and is completely contained in the prior-filed application[.]

It should be noted that the drawings submitted with this petition on March 7, 2011 are not completely contained in prior-filed application, serial number 61/305,433. Applicant may only utilize 37 CFR 1.57(a) when the inadvertently omitted drawings are completely contained in a prior-filed non-provisional, provisional, or foreign application.

Please note that no petition is required and that the amendment must comply with 37 CFR 1.57(a) and 37 CFR 1.121. See MPEP § 201.17. Any amendment to include the inadvertently omitted drawing(s) will be considered by the examiner.

To the extent the instant petition requests a filing date of February 17, 2011 with no drawings present in the application, the petition is **GRANTED**.

Given the basis for granting this petition, the petition fee is being refunded.

Pursuant to this decision, the application will be referred to Office of Patent Application Processing for: **correction of the filing date to February 17, 2011.**

The file does not indicate a change of address has been submitted, although the address given on the petition differs from the address of record. If appropriate, a change of address should be filed in accordance with MPEP 601.03. A courtesy copy of this decision is being mailed to the address given on the petition; however, the Office will mail all future correspondence solely to the address of record.

Telephone inquiries concerning this matter may be directed to Jose G Dees at (571) 272-1569.

Christopher Bottorff
Petitions Examiner
Office of Petitions

cc: Robert F. Zielinski
404 South 16th Street
Philadelphia, PA 19146

UNITED STATES PATENT AND TRADEMARK OFFICE

UNITED STATES DEPARTMENT OF COMMERCE
United States Patent and Trademark Office
Address: COMMISSIONER FOR PATENTS
P.O. Box 1450
Alexandria, Virginia 22313-1450
www.uspto.gov

APPLICATION NO.	FILING DATE	FIRST NAMED INVENTOR	ATTORNEY DOCKET NO.	CONFIRMATION NO.
13/029,762	02/17/2011	John R. Wilson	3003.02US04AE	1304

24113 7590 03/29/2011
PATTERSON THUENTE CHRISTENSEN PEDERSEN, P.A.
4800 IDS CENTER
80 SOUTH 8TH STREET
MINNEAPOLIS, MN 55402-2100

EXAMINER

ART UNIT	PAPER NUMBER
1775	

MAIL DATE	DELIVERY MODE
03/29/2011	PAPER

Please find below and/or attached an Office communication concerning this application or proceeding.

The time period for reply, if any, is set in the attached communication.

UNITED STATES PATENT AND TRADEMARK OFFICE

Commissioner for Patents
United States Patent and Trademark Office
P.O. Box 1450
Alexandria, VA 22313-1450
www.uspto.gov

3/29/2011

CST

In re application of John R. Wilson et al Serial No. 13/029,762 Filed: February 17, 2011 For: CELL CULTURE METHODS AND DEVICES UTILIZING GAS PERMEABLE MATERIALS	:	DECISION ON PETITION TO MAKE SPECIAL

This is a decision on the petition filed on February 17, 2011 to make the above-identified application special under the accelerated examination program.

The petition to make the application special is **DISMISSED.**

REGULATION AND PRACTICE

A grantable petition to make special under 37 C.F.R. § 1.102(d) and pursuant to the "Change to Practice for Petitions in Patent Applications to Make Special and for Accelerated Examination" published in the Federal Register on June 26, 2006 (71 Fed. Reg. 36323), must satisfy the following conditions:

I. Conditions Regarding the Application:

1. the application must be a non-reissue utility or design application filed under 37 CFR 1.111(a);
2. the application, the petition and the required fees must be filed electronically using the USPTO's electronic filing system (EFS), or EFS-web; if not filed electronically, a statement asserting that EFS and EFS-web were not available during the normal business hours;
3. at the time of filing, the application must be complete under 37 CFR 1.51 and in condition for examination;
4. the application must contain three or fewer independent claims and twenty or fewer total claims and the claims must be directed to a single invention.

II. Conditions Regarding the Petition:

The petition must:

1. be filed with the application;
2. include a statement that applicant agrees not to separately argue the patentability of any dependent claim during any appeal in the application;

3. include a statement that applicant agrees to make an election without traverse in a telephone interview;

4. include a statement that applicant agrees to conduct such an interview when requested by the examiner;

5. include a statement, made based on a good faith belief, that a preexamination search in compliance with the following requirements, was conducted, including an identification of the field of search by United States class and subclass, where applicable, and for database searches, the search logic or chemical structure or sequence used as a query, the name of the file(s) searched and the database service, and the date of the search.

The preexamination search must:

5.1 involve U.S. patents and patent application publications, foreign patent documents, and non-patent literature, unless the applicant can justify with reasonable certainty that no references more pertinent than those already identified are likely to be found in the eliminated sources and includes such a justification with this statement;

5.2. be directed to the claimed invention and encompass all of the features of the claims, giving the claims the broadest reasonable interpretation;

5.3. encompass the disclosed features that may be claimed.

6. must provide in support of the petition an accelerated examination support document.

An accelerated examination support document must include:

6.1. an information disclosure statement (IDS) in compliance with 37 CFR 1.98 citing each reference deemed most closely related to the subject matter of each of the claims;

6.2. an identification of all the limitations in the claims that are disclosed by the reference specifying where the limitation is disclosed in the cited reference;

6.3. a detailed explanation of how each of the claims are patentable over the references cited with particularity required by 37 CFR 1.111(b) and (c);

6.4. a concise statement of the utility of the invention as defined in each of the independent claims (unless the application is a design application);

6.5. a showing of where each limitation of the claims finds support under 35 USC 112, first paragraph, in the written description of the specification. If applicable, the showing must also identify: (1) each means- (or step) plus-function claim element that invokes consideration under 35 USC 112, sixth paragraph; and (2) the structure, material, or acts in the specification that corresponds to each means- (or step) plus-function claim element that invokes consideration under 35 USC 112, sixth paragraph; if the application claims the benefit of one or more applications under title 35, United States Code, the showing must also include where each limitation of the claims finds support under 35 USC 112, first paragraph, in each such application in which such supports exists;

6.6. an identification of any cited references that may be disqualified under 35 USC 103(c).

REVIEW OF FACTS

The conditions regarding the application (section I, subsections 1-4) discussed above are considered to have been met. Additionally, the conditions regarding the petition, section II, subsections 1-4 and 6, are considered to have been met. However, the petition fails to comply with condition II, subsection 5.

It appears that the search is incomplete. Note that a search in Class 435/subclasses 297.1, 297.5, 304.1, 304.3, 383 and 401 is also required.

Therefore, the petition fails to meet the required conditions to be accorded special status under the accelerated examination procedure.

DECISION

For the above-stated reasons, the petition is dismissed. The application will therefore be taken up by the examiner in its regular turn.

Petitioner is given a single opportunity to perfect the petition. Any request for reconsideration of this decision must be submitted within 1 (one) month or 30 (thirty) days, whichever is longer, (no extension of time under 37 CFR 1.136(a)) from the date of this decision in order to be considered timely. Any request for reconsideration must address the deficiencies indicated above.

Petitioner is reminded that, upon granting of the special status of the application on request for reconsideration, the application will be processed expeditiously. However, due to the dismissal of the instant petition, examination may not be completed within twelve months of the filing date of the application.

Any inquiry regarding this decision should be directed to Christine Tierney, Quality Assurance Specialist, at (571) 272-1055.

/Christine Tierney/

Christine Tierney
Quality Assurance Specialist
Technology Center 1700

UNITED STATES PATENT AND TRADEMARK OFFICE

UNITED STATES DEPARTMENT OF COMMERCE
United States Patent and Trademark Office
Address: COMMISSIONER FOR PATENTS
P.O. Box 1450
Alexandria, Virginia 22313-1450
www.uspto.gov

APPLICATION NO.	FILING DATE	FIRST NAMED INVENTOR	ATTORNEY DOCKET NO.	CONFIRMATION NO.
13/029,762	02/17/2011	John R. Wilson	3003.02US04AE	1304

24113 7590 03/29/2011
PATTERSON THUENTE CHRISTENSEN PEDERSEN, P.A.
4800 IDS CENTER
80 SOUTH 8TH STREET
MINNEAPOLIS, MN 55402-2100

EXAMINER

ART UNIT	PAPER NUMBER
1775	

MAIL DATE	DELIVERY MODE
03/29/2011	PAPER

Please find below and/or attached an Office communication concerning this application or proceeding.

The time period for reply, if any, is set in the attached communication.

UNITED STATES PATENT AND TRADEMARK OFFICE

Commissioner for Patents
United States Patent and Trademark Office
P.O. Box 1450
Alexandria, VA 22313-1450
www.uspto.gov

3/29/2011

CST

In re application of John R. Wilson et al Serial No. 13/029,762 Filed: February 17, 2011 For: CELL CULTURE METHODS AND DEVICES UTILIZING GAS PERMEABLE MATERIALS	: : : : : :	DECISION ON PETITION TO MAKE SPECIAL

This is a decision on the petition filed on February 17, 2011 to make the above-identified application special under the accelerated examination program.

The petition to make the application special is **DISMISSED.**

REGULATION AND PRACTICE

A grantable petition to make special under 37 C.F.R. § 1.102(d) and pursuant to the "Change to Practice for Petitions in Patent Applications to Make Special and for Accelerated Examination" published in the Federal Register on June 26, 2006 (71 Fed. Reg. 36323), must satisfy the following conditions:

I. Conditions Regarding the Application:

1. the application must be a non-reissue utility or design application filed under 37 CFR 1.111(a);
2. the application, the petition and the required fees must be filed electronically using the USPTO's electronic filing system (EFS), or EFS-web; if not filed electronically, a statement asserting that EFS and EFS-web were not available during the normal business hours;
3. at the time of filing, the application must be complete under 37 CFR 1.51 and in condition for examination;
4. the application must contain three or fewer independent claims and twenty or fewer total claims and the claims must be directed to a single invention.

II. Conditions Regarding the Petition:

The petition must:

1. be filed with the application;
2. include a statement that applicant agrees not to separately argue the patentability of any dependent claim during any appeal in the application;

3. include a statement that applicant agrees to make an election without traverse in a telephone interview;

4. include a statement that applicant agrees to conduct such an interview when requested by the examiner;

5. include a statement, made based on a good faith belief, that a preexamination search in compliance with the following requirements, was conducted, including an identification of the field of search by United States class and subclass, where applicable, and for database searches, the search logic or chemical structure or sequence used as a query, the name of the file(s) searched and the database service, and the date of the search.

The preexamination search must:

5.1 involve U.S. patents and patent application publications, foreign patent documents, and non-patent literature, unless the applicant can justify with reasonable certainty that no references more pertinent than those already identified are likely to be found in the eliminated sources and includes such a justification with this statement;

5.2. be directed to the claimed invention and encompass all of the features of the claims, giving the claims the broadest reasonable interpretation;

5.3. encompass the disclosed features that may be claimed.

6. must provide in support of the petition an accelerated examination support document.

An accelerated examination support document must include:

6.1. an information disclosure statement (IDS) in compliance with 37 CFR 1.98 citing each reference deemed most closely related to the subject matter of each of the claims;

6.2. an identification of all the limitations in the claims that are disclosed by the reference specifying where the limitation is disclosed in the cited reference;

6.3. a detailed explanation of how each of the claims are patentable over the references cited with particularity required by 37 CFR 1.111(b) and (c);

6.4. a concise statement of the utility of the invention as defined in each of the independent claims (unless the application is a design application);

6.5. a showing of where each limitation of the claims finds support under 35 USC 112, first paragraph, in the written description of the specification. If applicable, the showing must also identify: (1) each means- (or step) plus-function claim element that invokes consideration under 35 USC 112, sixth paragraph; and (2) the structure, material, or acts in the specification that corresponds to each means- (or step) plus-function claim element that invokes consideration under 35 USC 112, sixth paragraph; if the application claims the benefit of one or more applications under title 35, United States Code, the showing must also include where each limitation of the claims finds support under 35 USC 112, first paragraph, in each such application in which such supports exists;

6.6. an identification of any cited references that may be disqualified under 35 USC 103(c).

REVIEW OF FACTS

The conditions regarding the application (section I, subsections 1-4) discussed above are considered to have been met. Additionally, the conditions regarding the petition, section II, subsections 1-4 and 6, are considered to have been met. However, the petition fails to comply with condition II, subsection 5.

It appears that the search is incomplete. Note that a search in Class 435/subclasses 297.1, 297.5, 304.1, 304.3, 383 and 401 is also required.

Therefore, the petition fails to meet the required conditions to be accorded special status under the accelerated examination procedure.

DECISION

For the above-stated reasons, the petition is dismissed. The application will therefore be taken up by the examiner in its regular turn.

Petitioner is given a single opportunity to perfect the petition. Any request for reconsideration of this decision must be submitted within 1 (one) month or 30 (thirty) days, whichever is longer, (no extension of time under 37 CFR 1.136(a)) from the date of this decision in order to be considered timely. Any request for reconsideration must address the deficiencies indicated above.

Petitioner is reminded that, upon granting of the special status of the application on request for reconsideration, the application will be processed expeditiously. However, due to the dismissal of the instant petition, examination may not be completed within twelve months of the filing date of the application.

Any inquiry regarding this decision should be directed to Christine Tierney, Quality Assurance Specialist, at (571) 272-1055.

/Christine Tierney/

Christine Tierney
Quality Assurance Specialist
Technology Center 1700

UNITED STATES PATENT AND TRADEMARK OFFICE

UNITED STATES DEPARTMENT OF COMMERCE
United States Patent and Trademark Office
Address: COMMISSIONER FOR PATENTS
P.O. Box 1450
Alexandria, Virginia 22313-1450
www.uspto.gov

APPLICATION NO.	FILING DATE	FIRST NAMED INVENTOR	ATTORNEY DOCKET NO.	CONFIRMATION NO.
13/029,762	02/17/2011	John R. Wilson	3003.02US04AE	1304

24113 7590 05/03/2011
PATTERSON THUENTE CHRISTENSEN PEDERSEN, P.A.
4800 IDS CENTER
80 SOUTH 8TH STREET
MINNEAPOLIS, MN 55402-2100

EXAMINER
BEISNER, WILLIAM H

ART UNIT	PAPER NUMBER
1775	

MAIL DATE	DELIVERY MODE
05/03/2011	PAPER

Please find below and/or attached an Office communication concerning this application or proceeding.

The time period for reply, if any, is set in the attached communication.

UNITED STATES PATENT AND TRADEMARK OFFICE

Commissioner for Patents
United States Patent and Trademark Office
P.O. Box 1450
Alexandria, VA 22313-1450
www.uspto.gov

5-3-11

CST

In re application of John R. Wilson et al Serial No. 13/029,762 Filed: February 17, 2011 For: CELL CULTURE METHODS AND DEVICES UTILIZING GAS PERMEABLE MATERIALS	:	DECISION ON PETITION TO MAKE SPECIAL

This is a decision on the Request for Reconsideration of Petition to Make Special under the Accelerated Examination Program filed on April 29, 2011 to make the above-identified application special.

The petition to make the application special is **GRANTED.**

The application is eligible for accelerated examination and the petition complies with the conditions for granting the application special status pursuant to the "Change to Practice for Petitions in Patent Applications to Make Special and for Accelerated Examination" published June 26, 2006, in the Federal Register. (71 Fed. Reg. 36323).

The prosecution of the instant application will be conducted expeditiously according to the following guidelines.

1. The application will be docketed to an examiner and taken up for action within two weeks of the date of this decision.

2. Restriction Practice:
   If the examiner determines that the claims are not directed to a single invention, a telephone request to elect one single invention will be made pursuant to MPEP 812.01. As a prerequisite to the grant of this petition, the applicant has agreed to make an oral election, by telephone, without traverse. If the applicant refuses to make an election without traverse, or the examiner cannot reach the applicant after a reasonable effort, the examiner will treat the first claimed invention (invention defined by claim 1) as having being constructively elected without traverse for examination.

3. Office action:
   If it is determined that, after appropriate consultation, there is a potential rejection or any other issue to be addressed, the examiner will telephone the applicant and arrange an interview to discuss and resolve the issue. An Office action, other than a Notice of Allowance and Fee(s) Due (Notice of Allowance), will not be issued unless either: 1) an interview was conducted but did not result in agreed to action that places the application in condition for allowance, or, 2) a determination is made that an interview would be unlikely to result in the application being placed in condition for allowance, and 3) an internal conference has been held to review any rejection of any claim.

4. Time for Reply:
   An Office action other than a Notice of Allowance or a final Office action will set a shortened statutory period of one month or thirty days, whichever is longer, for reply with no extension of time available under 37 CFR 1.136(a). Failure to timely file a reply within this non-extendible period for reply will result in the abandonment of the application.

5. Reply by Applicant:
   A timely reply to an Office action other than the Notice of Allowance must be submitted electronically via EFS or EFS-web and limited to addressing the rejections, objections and requirement made. Any amendment that attempts to: 1) add claims which would result in more than three pending independent claims or more than twenty pending total claims; 2) present claims not encompassed by the pre-examination search or an updated accelerated examination support document; or 3) present claims that are directed a non-elected invention or an invention other than that previously claimed and examined in the application, will be treated as not fully responsive and will not be entered.

   For any amendment to the claims (including any new claim) that is not encompassed by the accelerated examination support document, applicant must provide an updated accelerated examination support document that encompasses the amended or new claims at the time of filing of the amendment.

   To proceed expeditiously with the examination, it is recommended that a reply with amendments made to any claim or with any new claim being added be accompanied by an updated accelerated examination support document or a statement explaining how the amended or new claim is supported by the original accelerated examination support document.

6. Information Disclosure Statement (IDS):
   Any IDS filed during prosecution must be submitted electronically via EFS or EFS-web, accompanied by an updated accelerated examination support document, and be in compliance with 37 CFR 1.97 and 1.98.

7. Post-Allowance Processing:
   To expedite processing of the allowed application into a patent, the applicant must: 1) pay the required fees within one month of the date of the Notice of Allowance, and 2) not file any post allowance papers not required by the Office. In no event may the issue fee be paid and accepted later than three months from the date of the Notice of Allowance.

8. After-Final and Appeal Procedures:
   To expedite prosecution, after receiving the final Office action, applicant must: 1) promptly file a notice of appeal, an appeal brief and appeal fees; and 2) not request a pre-appeal brief conference.

   Any amendment, affidavit or other evidence filed after final Office action must comply with applicable rules and the requirements outlined in numbered paragraphs 5 and 6 above.

   On appeal, the application will proceed according to normal appeal procedures. After appeal, the application will again be treated special.

9. Proceedings Outside the Normal Examination Process:
   If the application becomes involved in a proceeding that is outside the normal examination process (e.g., a secrecy order, national security review, interference proceeding, petitions under 37 CFR 1.181, 182 or 183), the application will be treated special before and after such proceeding.

10. Final Disposition:
    The twelve month goal of this accelerated examination procedure ends with a final disposition. The mailing of a final Office action, a Notice of Allowance, the filing of a Notice of Appeal, or the filing of a Request for Continued Examination (RCE) is the final disposition.

If, during prosecution, a paper is not filed electronically using EFS-web, a reply is filed but is not fully responsive, the application is involved in an appeal, or a proceeding outside normal examination process, the application will still be examined expeditiously, however, the final disposition may occur more than twelve months from the filing of the application.

Any inquiry regarding this decision should be directed to Christine Tierney, Quality Assurance Specialist, at (571) 272-1055.

/Christine Tierney/

Christine Tierney
Quality Assurance Specialist
Technology Center 1700

UNITED STATES PATENT AND TRADEMARK OFFICE

Commissioner for Patents
United States Patent and Trademark Office
P.O. Box 1450

CROWELL & MORING LLP
INTELLECTUAL PROPERTY GROUP
P.O. BOX 14300
WASHINGTON DC 20044-4300

MAILED

SEP 12 2011

OFFICE OF PETITIONS

In re Application of :
Eduard HILBERER et al. : ON PETITION
Application No. 13/029,772 :
Filed: February 17, 2011 :
Atty. Docket No.: 037068.63296US

This is in response to the petition under 37 CFR 1.47(a), filed August 22, 2011.

The petition is **DISMISSED**.

Rule 47 applicant is given TWO (2) MONTHS from the mailing date of this decision to reply, correcting the below-noted deficiencies. Any reply should be entitled "Request for Reconsideration of Petition Under 37 CFR 1.47(a)," and should only address the deficiencies noted below, except that the reply may include an oath or declaration executed by the non-signing inventor. **FAILURE TO RESPOND WILL RESULT IN ABANDONMENT OF THE APPLICATION**. Any extensions of time will be governed by 37 CFR 1.136(a).

A grantable petition under 37 CFR 1.47(a) requires:

(1) proof that the non-signing inventor cannot be reached or refuses to sign the oath or declaration after having been presented with the application papers (specification, claims, and drawings);
(2) an acceptable oath or declaration in compliance with 35 U.S.C. §§ 115 and 116;
(3) the petition fee; and
(4) a statement of the last known address of the non-signing inventor.

The instant petition lacks items (1).

Item (1) requires that a "diligent effort" has been expended in attempting to find or reach the non-signing inventor (35 U.S.C. § 116) (*see also*, MPEP 409.03(a)). The showing currently fails to demonstrate, with a documented showing, that a diligent effort was made to find or locate non-signing inventor Eduard Hilberer. Petitioner fails to show that Mr. Hilberer was not available via online searching. Additional evidence should include

whether petitioner has access to the inventor's personnel record, and, if so, what does inspection of the record reveal as to a current address, forwarding address, or an address of the nearest living relative? What does inspection of the phone directories for those address locations reveal? If a forwarding address is provided, petitioner should then mail a complete copy of the application papers (specification, claims, drawings, oath, etc.) to the non-signing inventor's address, return receipts requested, along with a cover letter of instructions which includes a deadline. If the papers are returned and all other attempts to locate or reach the inventor, e.g., through personnel records, co-workers, E-mail, the Internet or the telephone, etc., continue to fail, then applicant will have established that the inventor cannot be reached after diligent effort. The statements of facts must be signed, where at possible, by a person having firsthand knowledge of the facts recited therein and should be accompanied by documentary evidence in support of the statement of facts. It is important that the forthcoming communication contain statements of fact as opposed to conclusions.

Where there is an express or oral refusal, that fact, along with the time and place of the refusal, must be stated in an affidavit or declaration by the party to whom the refusal was made. Where there is a written refusal, a copy of the document evidencing that refusal must be made part of the affidavit or declaration.

When it is concluded by the rule 47 application that an omitted inventor's conduct constitutes a refusal, all facts upon which that a conclusion is based should be stated in an affidavit or declaration. If there is documentary evidence to support facts alleged in the affidavit or declaration, such evidence must be submitted.

Whenever an omitted inventor gives a reason for refusing to sign the application oath or declaration, that reason should be stated in the affidavit or declaration.

Further correspondence with respect to this matter should be addressed as follows:

By Mail: Mail Stop PETITION
Commissioner for Patents
P. O. Box 1450
Alexandria, VA 22313-1450

By hand: U. S. Patent and Trademark Office
Customer Service Window, Mail Stop Petitions
Randolph Building
401 Dulany Street
Alexandria, VA 22314

The centralized facsimile number is **(571) 273-8300.**

Telephone inquiries relating to this decision should be directed to Robert DeWitty, Petitions Attorney, Office of Petitions (571-272-8427).

Ramesh Krishnamurthy

for Anthony Knight
Director
Office of Petitions

UNITED STATES PATENT AND TRADEMARK OFFICE

Commissioner for Patents
United States Patent and Trademark Office
P.O. Box 1450

MAILED
JAN 24 2012
OFFICE OF PETITIONS

CROWELL & MORING LLP
INTELLECTUAL PROPERTY GROUP
P.O. BOX 14300
WASHINGTON DC 20044-4300

In re Application of	:	
Eduard HILBERER et al.	:	ON PETITION
Application No. 13/029,772	:	
Filed: February 17, 2011	:	
Atty. Docket No.: 037068.63296US		

Papers filed on January 5, 2012 in response to a "Decision Refusing Status Under 37 CFR 1.47(a)," mailed September 12, 2011, included a Declaration signed by a previously non-signing inventor, Eduard Hilberer, in compliance with 37 CFR 1.63.

The petition is **DISMISSED AS MOOT**.

In view of the joinder of the inventor, further consideration under § 1.47(a) is not necessary. This application does not have any Rule 1.47 status and no such status should appear on the record for this file. This application need not be returned to this Office for any further consideration under 37 CFR 1.47(a).

Telephone inquires regarding this decision should be directed to Robert DeWitty, Petitions Attorney, Office of Petitions (571-272-8427).

The application file will be referred to Office of Patent Application Processing for further processing.

Ramesh Krishnamurthy
Petitions Examiner
Office of Petitions

PTO/SB/20PCT-KR (06-10)
Approved for use through 01/31/2012. OMB 0651-0058
U.S. Patent and Trademark Office; U. S. DEPARTMENT OF COMMERCE
Under the Paperwork Reduction Act of 1995, no persons are required to respond to a collection of information unless it displays a valid OMB control number.

REQUEST FOR PARTICIPATION IN THE PATENT COOPERATION TREATY - PATENT PROSECUTION HIGHWAY (PCT-PPH) PILOT PROGRAM BETWEEN THE KOREAN INTELLECTUAL PROPERTY OFFICE (KIPO) AND THE USPTO

Application No:	13/029,885	Filing date:	February 17, 2011
First Named Inventor:	William A. Elger		
Title of the Invention:	IMPACT DEVICE		

THIS REQUEST FOR PARTICIPATION IN THE PCT-PPH PILOT PROGRAM ALONG WITH THE REQUIRED DOCUMENTS MUST BE SUBMITTED VIA EFS-WEB. INFORMATION REGARDING EFS-WEB IS AVAILABLE AT HTTP://WWW.USPTO.GOV/EBC/EFS_HELP.HTML

APPLICANT HEREBY REQUESTS PARTICIPATION IN THE PCT-PPH PROGRAM AND PETITIONS TO MAKE THE ABOVE-IDENTIFIED APPLICATION SPECIAL UNDER THE PCT-PPH PROGRAM.

The above-identified application is (1) a national stage entry of the corresponding PCT application, or (2) a national stage entry of another PCT application which claims priority to the corresponding PCT application, or (3) a national application that claims domestic/ foreign priority to the corresponding PCT application, or (4) a national application which forms the basis for the priority claim in the corresponding PCT application, or (5) a continuing application of a U.S. application that satisfies one of (1) to (4) above, or (6) a U.S. application that claims domestic benefit to a U.S. provisional application which forms the basis for the priority claim in the corresponding PCT application.

The corresponding PCT application number(s) is/are: PCT/US2011/025288

The international filing date of the corresponding PCT application(s) is/are: February 17, 2011

I. List of Required Documents:

a. **A copy of the latest international work product (WO/ISA, WO/IPEA, or IPER) in the above–identified corresponding PCT application(s)**

☐ Is attached.

☑ Is not attached because the document is already in the U.S. application.

b. **A copy of all claims which were indicated as having novelty, inventive step and industrial applicability in the above-identified corresponding PCT application(s).**

☑ Is attached.

☐ Is not attached because the document is already in the U.S. application.

c. **English translations of the documents in a. and b. above are attached (if the documents are not in the English language). A statement that the English translation is accurate is attached for the document in b. above.**

This collection of information is required by 35 U.S.C. 119, 37 CFR 1.55, and 37 CFR 1.102(d). The information is required to obtain or retain a benefit by the public, which is to file (and by the USPTO to process) an application. Confidentiality is governed by 35 U.S.C. 122 and 37 CFR 1.11 and 1.14. This collection is estimated to take 2 hours to complete, including gathering, preparing, and submitting the completed application form to the USPTO. Time will vary depending upon the individual case. Any comments on the amount of time you require to complete this form and/or suggestions for reducing this burden should be sent to the Chief Information Officer, U.S. Patent and Trademark Office, U.S. Department of Commerce, P.O. Box 1450, Alexandria, VA 22313-1450. DO NOT SEND FEES OR COMPLETED FORMS TO THIS ADDRESS.

Approved for use through 01/31/2012. OMB 0651-0058
U.S.Patent and Trademark Office; U.S. DEPARTMENT OF COMMERCE
Under the Paperwork Reduction Act of 1995, no persons are required to respond to a collection of information unless it displays a valid OMB control number.

REQUEST FOR PARTICIPATION IN THE PCT-PPH PILOT PROGRAM BETWEEN THE KIPO AND THE USPTO

(continued)

Application No.:	13/029,885
First Named Inventor:	William A. Elger

d. **(1) An information disclosure statement listing the documents cited in the international work products (ISR, WO/ISA, WO/IPEA, IPER) of the corresponding PCT application.**

☐ Is attached

☑ Has already been filed in the above-identified U.S. application on December 21, 2011

(2) Copies of all documents (except) for U.S. patents or U.S. patent application publications)

☐ Are attached.

☑ Have already been filed in the above-identified U.S. application on December 21, 2011

II. Claims Correspondence Table:

Claims in US Application	Patentable Claims in the corresponding PCT Application	Explanation regarding the correspondence
1-20	1-20	

III. All the claims in the US application sufficiently correspond to the patentable claims in the corresponding PCT application.

Signature /edward j. evans/	Date February 14, 2012
Name (Print/Typed) Edward J. Evans	Registration Number 61576

Privacy Act Statement

The **Privacy Act of 1974 (P.L. 93-579)** requires that you be given certain information in connection with your submission of the attached form related to a patent application or patent. Accordingly, pursuant to the requirements of the Act, please be advised that: (1) the general authority for the collection of this information is 35 U.S.C. 2(b)(2); (2) furnishing of the information solicited is voluntary; and (3) the principal purpose for which the information is used by the U.S. Patent and Trademark Office is to process and/or examine your submission related to a patent application or patent. If you do not furnish the requested information, the U.S. Patent and Trademark Office may not be able to process and/or examine your submission, which may result in termination of proceedings or abandonment of the application or expiration of the patent.

The information provided by you in this form will be subject to the following routine uses:

1. The information on this form will be treated confidentially to the extent allowed under the Freedom of Information Act (5 U.S.C. 552) and the Privacy Act (5 U.S.C 552a). Records from this system of records may be disclosed to the Department of Justice to determine whether disclosure of these records is required by the Freedom of Information Act.
2. A record from this system of records may be disclosed, as a routine use, in the course of presenting evidence to a court, magistrate, or administrative tribunal, including disclosures to opposing counsel in the course of settlement negotiations.
3. A record in this system of records may be disclosed, as a routine use, to a Member of Congress submitting a request involving an individual, to whom the record pertains, when the individual has requested assistance from the Member with respect to the subject matter of the record.
4. A record in this system of records may be disclosed, as a routine use, to a contractor of the Agency having need for the information in order to perform a contract. Recipients of information shall be required to comply with the requirements of the Privacy Act of 1974, as amended, pursuant to 5 U.S.C. 552a(m).
5. A record related to an International Application filed under the Patent Cooperation Treaty in this system of records may be disclosed, as a routine use, to the International Bureau of the World Intellectual Property Organization, pursuant to the Patent Cooperation Treaty.
6. A record in this system of records may be disclosed, as a routine use, to another federal agency for purposes of National Security review (35 U.S.C. 181) and for review pursuant to the Atomic Energy Act (42 U.S.C. 218(c)).
7. A record from this system of records may be disclosed, as a routine use, to the Administrator, General Services, or his/her designee, during an inspection of records conducted by GSA as part of that agency's responsibility to recommend improvements in records management practices and programs, under authority of 44 U.S.C. 2904 and 2906. Such disclosure shall be made in accordance with the GSA regulations governing inspection of records for this purpose, and any other relevant (*i.e.*, GSA or Commerce) directive. Such disclosure shall not be used to make determinations about individuals.
8. A record from this system of records may be disclosed, as a routine use, to the public after either publication of the application pursuant to 35 U.S.C. 122(b) or issuance of a patent pursuant to 35 U.S.C. 151. Further, a record may be disclosed, subject to the limitations of 37 CFR 1.14, as a routine use, to the public if the record was filed in an application which became abandoned or in which the proceedings were terminated and which application is referenced by either a published application, an application open to public inspection or an issued patent.
9. A record from this system of records may be disclosed, as a routine use, to a Federal, State, or local law enforcement agency, if the USPTO becomes aware of a violation or potential violation of law or regulation.

UNITED STATES PATENT AND TRADEMARK OFFICE

UNITED STATES DEPARTMENT OF COMMERCE
United States Patent and Trademark Office
Address: COMMISSIONER FOR PATENTS
P.O. Box 1450
Alexandria, Virginia 22313-1450
www.uspto.gov

APPLICATION NO.	FILING DATE	FIRST NAMED INVENTOR	ATTORNEY DOCKET NO.	CONFIRMATION NO.
13/029,909		Hyungsu Seo	87830(309566)	1566

90238 7590 03/01/2011
Edwards Angell Palmer & Dodge LLP
P.O. Box 55874
Boston, MA 02205

EXAMINER

ART UNIT	PAPER NUMBER
2473	

NOTIFICATION DATE	DELIVERY MODE
03/01/2011	ELECTRONIC

Please find below and/or attached an Office communication concerning this application or proceeding.

The time period for reply, if any, is set in the attached communication.

Notice of the Office communication was sent electronically on above-indicated "Notification Date" to the following e-mail address(es):

patent@eapdlaw.com

UNITED STATES PATENT AND TRADEMARK OFFICE

MAILED

FEB 28 2011

DIRECTOR OFFICE
TECHNOLOGY CENTER 2400

Commissioner for Patents
United States Patent and Trademark Office
P.O. Box 1450
Alexandria, VA 22313-1450
www.uspto.gov

Edwards Angell Palmer & Dodge LLP
P.O. Box 55874
Boston MA 02205

In re Application of: SEO, HYUNGSU
Application No. 13029909
Filed:
For: SESSION ESTABLISHMENT METHOD USING GATEWAY SERVER AND PHONE IDENTIFICATION

DECISION ON REQUEST TO PARTICIPATE IN PATENT PROSECUTION HIGHWAY PROGRAM AND PETITION TO MAKE SPECIAL UNDER 37 CFR 1.102(d)

This is a decision on the request to participate in the Patent Prosecution Highway (PPH) program and the petition under 37 CFR 1.102(d), filed February 17, 2011, to make the above-identified application special.

The petition is **GRANTED.**

A grantable request to participate in the PPH program and petition to make special require:

(1) The U.S. application is
(a) a Paris Convention application which either
(i) validly claims priority under 35 U.S.C. 119(a) and 37 CFR 1.55 to one or more applications filed in the KIPO, or
(ii) validly claims priority under 35 U.S.C. 119(a)/365(a) to a PCT application that contains no priority claims, or
(b) a national stage application under the PCT (an application which entered the national stage in the U.S. from a PCT international application after compliance with 35 U.S.C. 371), which PCT application
(i) validly claims priority under 35 U.S.C. 365(b) to an application (may include utility model application) filed in the KIPO, or
(ii) validly claims priority under 35 U.S.C. 365(b) to a PCT application that contains no priority claims, or
(iii) contains no priority claim, or
(c) a so-called bypass application filed under 35 U.S.C. 111(a) which validly claims benefit under 35 U.S.C. 120 to a PCT application, which PCT application
(i) validly claims priority under 35 U.S.C. 365(b) to an application (may include a utility model application) filed in the KIPO, or
(ii) validly claims priority under 35 U.S.C. 365(b) to a PCT application that contains no priority claims, or
(iii) contains no priority claim.

(2) Applicant must submit a copy of the allowable/patentable claim(s) from the KIPO application(s) along with an English translation thereof and a statement that the English translation is accurate;

(3) All the claims in the U.S. application must sufficiently correspond or be amended to sufficiently correspond to the allowable/patentable claim(s) in the KIPO application(s);

(4) Examination of the U.S. application has not begun;

(5) Applicant must submit a copy of all the office actions from each of the KIPO application(s) containing the allowable/patentable claim(s) along with an English translation thereof and a statement that the English translation is accurate;

(6) Applicant must submit an IDS listing the documents cited by the KIPO examiner in the KIPO office action along with copies of documents except U.S. patents or U.S. patent application publications; and

(7) The required petition fee under 37 CFR 1.17(h).

The request to participate in the PPH program and petition are found to comply with the above requirements. Note that the claim correspondence table incorrectly lists US application claims as 1-20 when they should be 21-40; claims 1-20 were cancelled and replaced with claims 21-40. It is considered that this is just a typographical error and the Applicant meant to list claims 21-40 as US application claim. Accordingly, the above-identified application has been accorded "special" status.

Telephone inquiries concerning this decision should be directed to Hassan Kizou at 571-272-3088

All other inquiries concerning the examination or status of the application is accessible in the PAIR system at http://www.uspto.gov/ebc/index.html.

The application is undergoing pre-examination processing. Once it is released for examination, the application will be forwarded to the examiner for action on the merits commensurate with this decision.

/Hassan Kizou/

Hassan Kizou
Quality Assurance Specialist, Technology Center 2400

UNITED STATES PATENT AND TRADEMARK OFFICE

Commissioner for Patents
United States Patent and Trademark Office
P.O. Box 1450
Alexandria, VA 22313-1450
www.uspto.gov

JONES DAY
222 E. 41ST. STREET
NEW YORK, NY 10017

MAILED
NOV 10 2011
OFFICE OF PETITIONS

Applicant(s): MULLER et al.
Appl. No.: 13/030,075
Filing Date: February 17, 2011
Title: ISOINDOLE-IMIDE COMPOUNDS AND COMPOSITIONS COMPRISING AND METHODS OF USING THE SAME
Attorney Docket: 12827-086-999
Pub. No.: US 2011/0144158 A1
Pub. Date: June 16, 2011

This is a decision on the request for a corrected patent application publication under 37 CFR 1.221(b), received on July 29, 2011, for the above-identified application.

The request is dismissed.

Applicant requests that the application be republished because the patent application publication contains material error wherein the assignee's name is not correctly printed on the first page of the publication.

37 CFR 1.221 (b) is applicable "only when the Office makes a material mistake which is apparent from Office records.... Any request for a corrected publication or revised patent application publication other than provided as provided in paragraph (a) of this section must be filed within two months from the date of the patent application publication. This period is not extendable." A material mistake must affect the public's ability to appreciate the technical disclosure of the patent application publication, to determine the scope of the patent application publication, or to determine the scope of the provisional rights that an applicant may seek to enforce upon issuance of a patent. [1]

The instant request does not identify a material mistake in the publication made by the Office under 37 CFR 1.221(b) with respect to the name of the assignee. An error in an assignee's name is not a material mistake because it does not affect the public's ability to appreciate the technical disclosure of the patent application publication, to determine the scope of the patent application publication or to determine the scope of the provisional rights that an applicant may seek to enforce upon issuance of a patent. See MPEP 1130. Applicants should not file requests for

[1] Changes to Implement Eighteen-Month Publication of Patent Applications, 65 FR 57023, 57038 (Sept. 20, 2000), 1239, Off. Gaz. Pat. Office Notices 63, 75 (Oct. 10, 2000) (final rule).

corrected publication when a publication includes error in assignment information or missing assignment information.

Applicant is encouraged to use and submit an eADS (PTO/SB/14) as an EFS-Web Fillable Form, rather than a scanned PDF image, to benefit from having the data loaded directly into USPTO electronic systems. For questions, contact the Patent EBC (Electronic Business Center):
Telephone: 1-866-217-9197 (toll-free) or E-mail: ebc@uspto.gov.
571-272-4100 (local)

The applicant is advised that a "request for republication of an application previously published" may be filed under 37 CFR 1.221(a). Such a request for republication "must include a copy of the application compliance with the Office's electronic filing system requirements and be accompanied by the publication fee set forth in § 1.18(d) and the processing fee set forth in § 1.17(i)." If the request for republication does not comply with the electronic filing system requirements, the republication will not take place and the publication fee set forth in § 1.18(d) will be refunded. The processing fee will be retained.

A guide for filing a request for a Pre-Grant Publication, such as a request for republication, may be found on the link below:

http://www.uspto.gov/patents/process/file/efs/guidance/index.jsp

http://www.uspto.gov/ebc/portal/efs/pgpub_quickstart.pdf

Any request for republication under 37 CFR 1.221(a), must be submitted via the EFS system, as a "Pre-Grant Publication".

Inquiries relating to this matter may be directed to Sherry D. Brinkley at (571) 272-3204.

/Christopher Bottorff/

Christopher Bottorff
Petitions Examiner
Office of Petitions

UNITED STATES PATENT AND TRADEMARK OFFICE

Commissioner for Patents
United States Patent and Trademark Office
P.O. Box 1450
Alexandria, VA 22313-1450
www.uspto.gov

FITZPATRICK CELLA HARPER
& SCINTO
1290 Avenue of the Americas
NEW YORK NY 10104-3800

MAILED
JUL 29 2011
OFFICE OF PETITIONS

In re Application of	:	
Ogawa et al.	:	
Application No. 13/030089	:	
Filing or 371(c) Date: 02/17/2011	:	ON PETITION
Attorney Docket Number:	:	
03500.136180.1	:	

This decision is in response to the "Petition Under 37 CFR § 1.182 to Change Name of Inventor," filed June 7, 2011, requesting correction of the name of an inventor.

MPEP 201.03, Correction of Inventorship in an Application, provides

(B) Where a typographical or transliteration error in the spelling of an inventor 's name is discovered, the Office should simply be notified of the error. A new oath or declaration is not required. See, MPEP § 605.04(g). Reference to the notification will be made on the previously filed oath or declaration.

However, "[e]xcept for correction of a typographical or transliteration error in the spelling of an inventor's name, a request to have the name changed from the typewritten version to the signed version or any other corrections in the name of the inventor(s) will not be entertained, unless accompanied by a petition under 37 CFR 1.182 together with an appropriate petition fee."

MPEP 605.04(b)

The petition is hereby **granted**.

The name of inventor Miki Ogawa has been changed to Miki Ito and the name Miki Ito has been entered and made of record in the above-identified application.

The application is being referred to Technology Center Art Unit 1641 for examination in the normal course of business.

Telephone inquiries concerning this matter should be directed to the undersigned at (571) 272-3232.

/DLW/

Derek L. Woods
Attorney
Office of Petitions

Enclosures: Corrected Filing Receipt

UNITED STATES PATENT AND TRADEMARK OFFICE

UNITED STATES DEPARTMENT OF COMMERCE
United States Patent and Trademark Office
Address: COMMISSIONER FOR PATENTS
P.O. Box 1450
Alexandria, Virginia 22313-1450
www.uspto.gov

APPLICATION NUMBER	FILING or 371(c) DATE	GRP ART UNIT	FIL FEE REC'D	ATTY.DOCKET.NO	TOT CLAIMS	IND CLAIMS
13/030,089	02/17/2011	1641	1090	03500.136180.1	5	2

CONFIRMATION NO. 1965

CORRECTED FILING RECEIPT

5514
FITZPATRICK CELLA HARPER & SCINTO
1290 Avenue of the Americas
NEW YORK, NY 10104-3800

OC000000049039561

Date Mailed: 07/29/2011

Receipt is acknowledged of this non-provisional patent application. The application will be taken up for examination in due course. Applicant will be notified as to the results of the examination. Any correspondence concerning the application must include the following identification information: the U.S. APPLICATION NUMBER, FILING DATE, NAME OF APPLICANT, and TITLE OF INVENTION. Fees transmitted by check or draft are subject to collection. Please verify the accuracy of the data presented on this receipt. **If an error is noted on this Filing Receipt, please submit a written request for a Filing Receipt Correction. Please provide a copy of this Filing Receipt with the changes noted thereon. If you received a "Notice to File Missing Parts" for this application, please submit any corrections to this Filing Receipt with your reply to the Notice. When the USPTO processes the reply to the Notice, the USPTO will generate another Filing Receipt incorporating the requested corrections**

Applicant(s)

Miki Itoh, Machida-shi, JAPAN;
Masato Minami, Yokohama-shi, JAPAN;
Takeshi Imamura, Chigasaki-shi, JAPAN;
Takashi Ikeda, Yokohama-shi, JAPAN;
Kazumichi Nakahama, Tokyo, JAPAN;

Assignment For Published Patent Application

CANON KABUSHIKI KAISHA, Tokyo, JAPAN

Power of Attorney: The patent practitioners associated with Customer Number 05514

Domestic Priority data as claimed by applicant

This application is a CON of 12/162,789 07/30/2008 PAT 7,932,100
which is a 371 of PCT/JP2007/057712 03/30/2007

Foreign Applications (You may be eligible to benefit from the **Patent Prosecution Highway** program at the USPTO. Please see http://www.uspto.gov for more information.)
JAPAN 2006-317401 11/24/2006
JAPAN 2006-100683 03/31/2006

Request to Retrieve - This application either claims priority to one or more applications filed in an intellectual property Office that participates in the Priority Document Exchange (PDX) program or contains a proper **Request to Retrieve Electronic Priority Application(s)** (PTO/SB/38 or its equivalent). Consequently, the USPTO will attempt to electronically retrieve these priority documents.

If Required, Foreign Filing License Granted: 03/02/2011

The country code and number of your priority application, to be used for filing abroad under the Paris Convention, is **US 13/030,089**

Projected Publication Date: Not Applicable

Non-Publication Request: No

Early Publication Request: No
Title

METHOD FOR DETECTING TARGET SUBSTANCE AND TARGET-SUBSTANCE DETECTION KIT

Preliminary Class

436

PROTECTING YOUR INVENTION OUTSIDE THE UNITED STATES

Since the rights granted by a U.S. patent extend only throughout the territory of the United States and have no effect in a foreign country, an inventor who wishes patent protection in another country must apply for a patent in a specific country or in regional patent offices. Applicants may wish to consider the filing of an international application under the Patent Cooperation Treaty (PCT). An international (PCT) application generally has the same effect as a regular national patent application in each PCT-member country. The PCT process **simplifies** the filing of patent applications on the same invention in member countries, but **does not result** in a grant of "an international patent" and does not eliminate the need of applicants to file additional documents and fees in countries where patent protection is desired.

Almost every country has its own patent law, and a person desiring a patent in a particular country must make an application for patent in that country in accordance with its particular laws. Since the laws of many countries differ in various respects from the patent law of the United States, applicants are advised to seek guidance from specific foreign countries to ensure that patent rights are not lost prematurely.

Applicants also are advised that in the case of inventions made in the United States, the Director of the USPTO must issue a license before applicants can apply for a patent in a foreign country. The filing of a U.S. patent application serves as a request for a foreign filing license. The application's filing receipt contains further information and guidance as to the status of applicant's license for foreign filing.

Applicants may wish to consult the USPTO booklet, "General Information Concerning Patents" (specifically, the section entitled "Treaties and Foreign Patents") for more information on timeframes and deadlines for filing foreign patent applications. The guide is available either by contacting the USPTO Contact Center at 800-786-9199, or it can be viewed on the USPTO website at http://www.uspto.gov/web/offices/pac/doc/general/index.html.

For information on preventing theft of your intellectual property (patents, trademarks and copyrights), you may wish to consult the U.S. Government website, http://www.stopfakes.gov. Part of a Department of Commerce initiative, this website includes self-help "toolkits" giving innovators guidance on how to protect intellectual property in specific countries such as China, Korea and Mexico. For questions regarding patent enforcement issues, applicants may call the U.S. Government hotline at 1-866-999-HALT (1-866-999-4158).

LICENSE FOR FOREIGN FILING UNDER

Title 35, United States Code, Section 184

Title 37, Code of Federal Regulations, 5.11 & 5.15

GRANTED

The applicant has been granted a license under 35 U.S.C. 184, if the phrase "IF REQUIRED, FOREIGN FILING LICENSE GRANTED" followed by a date appears on this form. Such licenses are issued in all applications where the conditions for issuance of a license have been met, regardless of whether or not a license may be required as set forth in 37 CFR 5.15. The scope and limitations of this license are set forth in 37 CFR 5.15(a) unless an earlier license has been issued under 37 CFR 5.15(b). The license is subject to revocation upon written notification. The date indicated is the effective date of the license, unless an earlier license of similar scope has been granted under 37 CFR 5.13 or 5.14.

This license is to be retained by the licensee and may be used at any time on or after the effective date thereof unless it is revoked. This license is automatically transferred to any related applications(s) filed under 37 CFR 1.53(d). This license is not retroactive.

The grant of a license does not in any way lessen the responsibility of a licensee for the security of the subject matter as imposed by any Government contract or the provisions of existing laws relating to espionage and the national security or the export of technical data. Licensees should apprise themselves of current regulations especially with respect to certain countries, of other agencies, particularly the Office of Defense Trade Controls, Department of State (with respect to Arms, Munitions and Implements of War (22 CFR 121-128)); the Bureau of Industry and Security, Department of Commerce (15 CFR parts 730-774); the Office of Foreign AssetsControl, Department of Treasury (31 CFR Parts 500+) and the Department of Energy.

NOT GRANTED

No license under 35 U.S.C. 184 has been granted at this time, if the phrase "IF REQUIRED, FOREIGN FILING LICENSE GRANTED" DOES NOT appear on this form. Applicant may still petition for a license under 37 CFR 5.12, if a license is desired before the expiration of 6 months from the filing date of the application. If 6 months has lapsed from the filing date of this application and the licensee has not received any indication of a secrecy order under 35 U.S.C. 181, the licensee may foreign file the application pursuant to 37 CFR 5.15(b).

UNITED STATES PATENT AND TRADEMARK OFFICE

Commissioner for Patents
United States Patent and Trademark Office
P.O. Box 1450
Alexandria, VA 22313-1450
www.uspto.gov

In re Application of
David M. Goldenberg

Application No. 13030204

Filed: February 18,2011

Attorney Docket No. IMM127US9

:DECISION ON PETITION TO MAKE SPECIAL
:UNDER 37 CFR 1.102(c)(1)

This is a decision on the electronic petition under 37 CFR 1.102 (c)(1), filed 09-MAY-2011 to make the above-identified application special based on applicant's age as set forth in MPEP § 708.02, Section IV.

The petition is **GRANTED**.

A grantable petition to make an application special under 37 CFR 1.102(c)(1), MPEP § 708.02, Section IV: Applicant's Age must include a statement by applicant or a registered practitioner having evidence that applicant is at least 65 years of age. No fee is required.

Accordingly, the above-identified application has been accorded "special" status and will be taken up for action by the examiner upon the completion of all pre-examination processing.

Telephone inquiries concerning this electronic decision should be directed to the Electronic Business Center at 866-217-9197.

All other inquiries concerning either the examination or status of the application should be directed to the Technology Center.

Doc code : PET.OP.AGE
Description : Petition to make special based on Age/Health

PTO/SB/130 (07-09)
Approved for use through 07/31/2012. OMB 0651- 0031
U.S. Patent and Trademark Office; U.S. DEPARTMENT OF COMMERCE
Under the Paperwork Reduction Act of 1995, no persons are required to respond to a collection of information unless it contains a valid OMB control number

PETITION TO MAKE SPECIAL BASED ON AGE FOR ADVANCEMENT OF EXAMINATION UNDER 37 CFR 1.102(c)(1)

Application Information

Application Number	13030204	Confirmation Number	2240	Filing Date	2011-02-18
Attorney Docket Number (optional)	IMM127US9	Art Unit	1643	Examiner	Huff, Sheela Jitendra
First Named Inventor	David M. Goldenberg				
Title of Invention	Antibody Therapy				

Attention: Office of Petitions
An application may be made special for advancement of examination upon filing of a petition showing that the applicant is 65 years of age, or more. No fee is required with such a petition. See 37 CFR 1.102(c)(1) and MPEP 708.02 (IV).

APPLICANT HEREBY PETITIONS TO MAKE SPECIAL FOR ADVANCEMENT OF EXAMINATION IN THIS APPLICATION UNDER 37 CFR 1.102(c)(1) and MPEP 708.02 (IV) ON THE BASIS OF THE APPLICANT'S AGE.

A grantable petition requires one of the following items:
(1) Statement by one named inventor in the application that he/she is 65 years of age, or more; or
(2) Certification by a registered attorney/agent having evidence such as a birth certificate, passport, driver's license, etc. showing one named inventor in the application is 65 years of age, or more.

Name of Inventor who is 65 years of age, or older

Given Name	Middle Name	Family Name	Suffix
David	M.	Goldenberg	

A signature of the applicant or representative is required in accordance with 37 CFR 1.33 and 10.18.
Please see 37 CFR 1.4(d) for the format of the signature.

Select (1) or (2) :

○ (1) I am an inventor in this application and I am 65 years of age, or more.

● (2) I am an attorney or agent registered to practice before the Patent and Trademark Office, and I certify that I am in possession of evidence, and will retain such in the application file record, showing that the inventor listed above is 65 years of age, or more.

Signature	/Richard A. Nakashima/	Date (YYYY-MM-DD)	2011-05-09
Name	Richard A. Nakashima	Registration Number	42023

PTO/SB/130 (07-09)
Approved for use through 07/31/2012. OMB 0651- 0031
U.S. Patent and Trademark Office; U.S. DEPARTMENT OF COMMERCE
Under the Paperwork Reduction Act of 1995, no persons are required to respond to a collection of information unless it contains a valid OMB control number

Privacy Act Statement

The Privacy Act of 1974 (P.L. 93-579) requires that you be given certain information in connection with your submission of the attached form related to a patent application or patent. Accordingly, pursuant to the requirements of the Act, please be advised that: (1) the general authority for the collection of this information is 35 U.S.C. 2(b)(2); (2) furnishing of the information solicited is voluntary; and (3) the principal purpose for which the information is used by the U.S. Patent and Trademark Office is to process and/or examine your submission related to a patent application or patent. If you do not furnish the requested information, the U.S. Patent and Trademark Office may not be able to process and/or examine your submission, which may result in termination of proceedings or abandonment of the application or expiration of the patent.

The information provided by you in this form will be subject to the following routine uses:

1. The information on this form will be treated confidentially to the extent allowed under the Freedom of Information Act (5 U.S.C. 552) and the Privacy Act (5 U.S.C. 552a). Records from this system of records may be disclosed to the Department of Justice to determine whether the Fr eedom of Information Act requires disclosure of these records.

2. A record from this system of records may be disclosed, as a routine use, in the course of presenting evidence to a court, magistrate, or administrative tribunal, including disclosures to opposing counsel in the course of settlement negotiations.

3. A record in this system of records may be disclosed, as a routine use, to a Member of Congress submitting a request involving an individual, to whom the record pertains, when the individual has requested assistance from the Member with respect to the subject matter of the record.

4. A record in this system of records may be disclosed, as a routine use, to a contractor of the Agency having need for the information in order to perform a contract. Recipients of information shall be required to comply with the requirements of the Privacy Act of 1974, as amended, pursuant to 5 U.S.C. 552a(m).

5. A record related to an International Application filed under the Patent Cooperation Treaty in this system of records may be disclosed, as a routine use, to the International Bureau of the World Intellectual Property Organization, pursuant to the Patent Cooperation Treaty.

6. A record in this system of records may be disclosed, as a routine use, to another federal agency for purposes of National Security review (35 U.S.C. 181) and for review pursuant to the Atomic Energy Act (42 U.S.C. 218(c)).

7. A record from this system of records may be disclosed, as a routine use, to the Administrator, General Services, or his/her designee, during an inspection of records conducted by GSA as part of that agency's responsibility to recommend improvements in records management practices and programs, under authority of 44 U.S.C. 2904 and 2906. Such disclosure shall be made in accordance with the GSA regulations governing inspection of records for this purpose, and any other relevant (i.e., GSA or Commerce) directive. Such disclosure shall not be used to make determinations about indivi duals.

8. A record from this system of records may be disclosed, as a routine use, to the public after either publication of the application pursuant to 35 U.S.C. 122(b) or issuance of a patent pursuant to 35 U.S.C. 151. Further, a record may be disclosed, subject to the limitations of 37 CFR 1.14, as a routine use, to the public if the record was filed in an application which became abandoned or in which the proceedings were terminated and which application is referenced by either a published application, an application open to public inspections or an issued patent.

9. A record from this system of records may be disclosed, as a routine use, to a Federal, State, or local law enforcement agency, if the USPTO becomes aware of a violation or potential violation of law or regulation.

UNITED STATES PATENT AND TRADEMARK OFFICE

Commissioner for Patents
United States Patent and Trademark Office
P.O. Box 1450
Alexandria, VA 22313-1450
www.uspto.gov

DRINKER BIDDLE & REATH (DC)
1500 K STREET, N.W.
SUITE 1100
WASHINGTON, DC 20005-1209

MAILED

FEB 22 2012

OFFICE OF PETITIONS

In re Application of
Yasusuke Iwashita, et. al.
Application No.: 13/030,252
Filed: February 18, 2011
Attorney Docket No.: 201252-0045 (464584)
For: CONTROLLER OF SPINDLE PROVIDED WITH ENCODER

: DECISION ON REQUEST TO
: PARTICIPATE IN THE PATENT
: PROSECUTION HIGHWAY
: PROGRAM AND PETITION
: TO MAKE SPECIAL UNDER
: 37 CFR 1.102(a)

This is a decision on the request to participate in the Patent Prosecution Highway (PPH) program and the petition under 37 CFR 1.102(a), filed December 20, 2011, to make the above-identified application special.

The request and petition are **GRANTED**.

Discussion

A grantable request to participate in the PPH pilot program and petition to make special require:

1. The U.S. application is
    a. a Paris Convention application which either
        i. validly claims priority under 35 U.S.C. 119(a) and 37 CFR 1.55 to one or more applications filed in the JPO, or
        ii. validly claims priority to a PCT application that contains no priority claims, or
    b. a national stage application under the PCT (an application which entered the national stage in the U.S. from a PCT international application after compliance with 35 U.S.C. 371), which PCT application
        i. validly claims priority to an application filed in the JPO, or
        ii. validly claims priority to a PCT application that contains no priority claims, or
        iii. contains no priority claim, or
    c. a so-called bypass application filed under 35 U.S.C. 111(a) which validly claims benefit under 35 U.S.C. 120 to a PCT application, which PCT application
        i. validly claims priority to an application filed in the JPO, or
        ii. validly claims priority to a PCT application that contains no priority claims, or
        iii. contains no priority claim;
2. Applicant must submit a copy of:
    a. The allowable/patentable claim(s) from the JPO application(s);
    b. An English translation of the allowable/patentable claim(s) and
    c. A statement that the English translation is accurate;

3. Applicant must:
    a. Ensure all the claims in the U.S. application must sufficiently correspond or be amended to sufficiently correspond to the allowable/patentable claim(s) in the JPO application(s) and
    b. Submit a claims correspondence table in English;
4. Examination of the U.S. application has not begun;
5. Applicant must submit:
    a. Documentation of prior office action:
        i. a copy of the office action(s) just prior to the "Decision to Grant a Patent" from each of the JPO application(s) containing the allowable/patentable claim(s) or
        ii. if the allowable/patentable claims(s) are from a "Notification of Reasons for Refusal" then the Notification of Reasons for Refusal or
        iii. if the JPO application is a first action allowance then no office action from the JPO is necessary should be indicated on the request/petition form;
    b. An English language translation of the JPO Office action from (5)(a)(i)-(ii) above
    c. A statement that the English translation is accurate;
6. Applicant must submit:
    a. An IDS listing the documents cited by the JPO examiner in the JPO office action (unless already submitted in this application)
    b. Copies of the documents except U.S. patents or U.S. patent application publications (unless already submitted in this application);

The request to participate in the PPH pilot program and petition comply with the above requirements. Accordingly, the above-identified application has been accorded "special" status.

Inquiries concerning this decision should be directed to the undersigned at (571) 272-3226. All other inquiries concerning the examination or status of the application is accessible in the PAIR system at http://www.uspto.gov/ebc.index.html.

This application will be forwarded to the examiner for action on the merits commensurate with this decision.

/Andrea Smith/
Andrea Smith
Petitions Examiner
Office of Petitions

UNITED STATES PATENT AND TRADEMARK OFFICE

Commissioner for Patents
United States Patent and Trademark Office
P.O. Box 1450
Alexandria, VA 22313-1450
www.uspto.gov

MAILED
OCT 21 2011
OFFICE OF PETITIONS

WARN, HOFFMANN, MILLER &
OZGA, P.C.
P.O. BOX 70098
ROCHESTER HILLS MI 48307

In re Application of	:	
Keating	:	DECISION ON PETITION
Application No. 13/030,257	:	
Filed: March 28, 2011	:	
Atty. Docket No. DKT09071A	:	
(BWI-00299)	:	

This is a decision on the petition under 37 CFR 1.57(a)(3), filed March 28, 2011, requesting that the above-referenced application be accorded a filing date of February 18, 2011.

Application papers in the above-identified application were filed on February 18, 2011. However, on March 4, 2011, the Office of Patent Application Processing mailed applicant a "Notice of Incomplete Nonprovisional Application," notifying applicant that the application papers had not been accorded a filing date because the application was deposited without a complete specification and at least one claim as prescribed by 35 U.S.C. 112.

In response, applicant timely filed a petition under 37 CFR 1.57(a)(3) on March 28, 2011. The petition was not forwarded to an appropriate deciding official. Instead, the Office of Patent Application Processing mailed a filing receipt listing March 28, 2011 as the application's filing date. On September 30, 2011, applicant filed a request that the Office consider the petition, filed March 28, 2011, and issue a corrected filing receipt.

Applicant acknowledges inadvertently omitting a copy of the specification and claims from the provisional application on submission of the present non-provisional application. Applicant argues, however, that the filing date of February 18, 2011, should still be accorded pursuant to § 1.57(a)(3).

On September 21, 2004, § 1.57 was added to read, in pertinent part that:

> (a) Subject to the conditions and requirements of this paragraph, if all or a portion of the specification or drawing(s) is inadvertently omitted from an application, but the application contains … a claim under 1.78 for the benefit of a prior-filed provisional, nonprovisional or international application, that was present on the filing date of the application, and the inadvertently omitted portion of the specification or drawing(s) is completely contained in the prior-filed application, the claim under … § 1.78 shall also be considered an incorporation by reference of the prior-filed application as to the inadvertently omitted portion of the specification or drawing(s).
>
> (1) The application must be amended to include the inadvertently omitted portion of the specification or drawing(s) within any time period set by the Office, but in no case later than the close of prosecution as defined by § 1.114(b), or abandonment of the application, whichever occurs earlier;
>
> (3) If an application is not otherwise entitled to a filing date under § 1.53(b), the amendment must be by way of a petition pursuant to this paragraph accompanied by the fee set forth in § 1.17(f).

It is noted that the papers received by the Office on February 18, 2011 included an application data sheet ("ADS") that contained a claim under 1.78 for the benefit of Application No. 61/338,897, filed February 25, 2010. Thus, pursuant to 1.57, the application as filed is considered to have incorporated by reference the prior-filed application as to the inadvertently omitted specification and claims.

The present petition does not comply with (1) above. The petition includes an amendment containing a copy of the specification, including the claims, from Application No. 61/338,897. However, the amendment also contains a cross-reference paragraph claiming priority to the provisional application. Therefore, the replacement specification contains <u>more</u> than the specification and claims from the provisional application.

In view thereof, the petition is **DISMISSED.**

Any request for reconsideration should include an amendment adding the specification, including the claims, from Application No. 61/338,897 to the instant application. Applicant is reminded that a proper benefit claim is already included in the ADS, filed on February 18, 2011.

Further correspondence with respect to this matter should be addressed as follows:

By mail: Mail Stop PETITION
Commissioner for Patents
Post Office Box 1450
Alexandria, VA 22313-1450

By hand: U.S. Patent and Trademark Office
Customer Service Window, Mail Stop Petition
Randolph Building
401 Dulany Street
Alexandria, VA 22314

By FAX: (571) 273-8300 - ATTN: Office of Petitions

By internet: EFS-Web
www.uspto.gov/ebc/efs_help.html
(for help using EFS-Web call the Patent Electronic Business Center at (866) 217-9197)

Telephone inquiries concerning this matter may be directed to Senior Petitions Attorney Shirene Willis Brantley at (571) 272-3230.

Chris Bottorff
Supervisor
Office of Petitions

UNITED STATES PATENT AND TRADEMARK OFFICE

Commissioner for Patents
United States Patent and Trademark Office
P.O. Box 1450
Alexandria, VA 22313-1450
www.uspto.gov

MAILED
JAN 17 2012
OFFICE OF PETITIONS

WARN, HOFFMANN, MILLER &
OZGA, P.C.
P.O. BOX 70098
ROCHESTER HILLS MI 48307

In re Application of	:	
Keating	:	DECISION ON PETITION
Application No. 13/030,257	:	
Filed: March 28, 2011	:	
Atty. Docket No. DKT09071A	:	
(BWI-00299)	:	

This is a decision on the renewed petition under 37 CFR 1.57(a)(3), filed December 15, 2011, requesting that the above-referenced application be accorded a filing date of February 18, 2011.

Application papers in the above-identified application were filed on February 18, 2011. However, on March 4, 2011, the Office of Patent Application Processing mailed applicant a "Notice of Incomplete Nonprovisional Application," notifying applicant that the application papers had not been accorded a filing date because the application was deposited without a complete specification and at least one claim as prescribed by 35 U.S.C. 112.

In response, applicant timely filed a petition under 37 CFR 1.57(a)(3) on March 28, 2011. The petition was not forwarded to an appropriate deciding official. Instead, the Office of Patent Application Processing mailed a filing receipt listing March 28, 2011 as the application's filing date. On September 30, 2011, applicant filed a request that the Office consider the petition, filed March 28, 2011, and issue a corrected filing receipt.

In the March 28, 2011 petition applicant acknowledges inadvertently omitting a copy of the specification and claims from the provisional application on submission of the present non-provisional application. Applicant argues, however, that the filing date of February 18, 2011, should still be accorded pursuant to § 1.57(a)(3). The March 28, 2011 petition was

dismissed on October 21, 2011 because applicant filed a replacement specification that contained more than the specification and claims from the provisional application.

A renewed petition was filed on December 15, 2011.

§ 1.57 provides, in pertinent part:

> (a) Subject to the conditions and requirements of this paragraph, if all or a portion of the specification or drawing(s) is inadvertently omitted from an application, but the application contains … a claim under 1.78 for the benefit of a prior-filed provisional, nonprovisional or international application, that was present on the filing date of the application, and the inadvertently omitted portion of the specification or drawing(s) is completely contained in the prior-filed application, the claim under … § 1.78 shall also be considered an incorporation by reference of the prior-filed application as to the inadvertently omitted portion of the specification or drawing(s).
>
> (1) The application must be amended to include the inadvertently omitted portion of the specification or drawing(s) within any time period set by the Office, but in no case later than the close of prosecution as defined by § 1.114(b), or abandonment of the application, whichever occurs earlier;
>
> (3) If an application is not otherwise entitled to a filing date under § 1.53(b), the amendment must be by way of a petition pursuant to this paragraph accompanied by the fee set forth in § 1.17(f).

It is noted that the papers received by the Office on February 18, 2011 included an application data sheet ("ADS") that contains a claim under 1.78 for the benefit of Application No. 61/338,897, filed February 25, 2010. Thus, pursuant to 1.57, the application as filed is considered to have incorporated by reference the prior-filed application as to the inadvertently omitted specification and claims.

The renewed petition includes an amendment (a substitute specification) containing a copy of the specification, claims, and drawings, from Application No. 61/338,897 and an

identification of where the inadvertently omitted material may be found in the prior-filed application.

In view of the incorporation by reference of the prior application, the specification, claims, and drawings supplied on December 15, 2011, would not constitute new matter if they were part of the original disclosure of the prior application. Of course, the examiner is expected to compare the specification, claims, and drawings in the substitute specification supplied on December 15, 2011, to Application No. 61/338,897 in order to verify that they are an accurate copy of the prior application and that they contain no new matter.

In view thereof, the petition is **GRANTED**.

Regarding fees, applicant has paid two $400.00 petition fees. Only one is required. Deposit account no. 50-1612 will be refunded $400.00.

The application is being forwarded to the Office of Patent Application Processing (OPAP) for according of a filing date of February 18, 2011, including the copy of the specification, claims, and drawings from the prior application supplied in the substitute specification on December 15, 2011. Applicant will receive appropriate notifications regarding the fees owed, if any, and other information in due course from OPAP.

Telephone inquiries concerning this matter may be directed to the Senior Petitions Attorney Shirene Willis Brantley at (571) 272-3230.

Anthony Knight
Director
Office of Petitions

PTO/SB/20PCT-US (09-10)
Approved for use through 01/31/2015. OMB 0651-0058
U.S. Patent and Trademark Office; U.S DEPARTMENT OF COMMERCE
Under the Paperwork Reduction Act of 1995, no persons are required to respond to a collection of information unless it displays a valid OMB control number.

REQUEST FOR PARTICIPATION IN THE PATENT COOPERATION TREATY – PATENT PROSECUTION HIGHWAY (PCT-PPH) PILOT PROGRAM IN A U.S. APPLICATION WHERE THE USPTO WAS THE ISA OR IPEA

Application No.:	13/030,384	First Named Inventor:	Yossi Gross
Filing Date:	February 18, 2011	Attorney Docket No.:	41594-704.502
Title of the Invention:	DEVICES AND METHODS FOR CONTROL OF BLOOD PRESSURE		

THIS REQUEST FOR PARTICIPATION IN THE PCT-PPH PILOT PROGRAM ALONG WITH THE REQUIRED DOCUMENTS MUST BE SUBMITTED VIA EFS-WEB. INFORMATION REGARDING EFS-WEB IS AVAILABLE AT HTTP://WWW.USPTO.GOV/EBC/EFS_HELP.HTML.

APPLICANT HEREBY REQUESTS PARTICIPATION IN THE PCT-PPH PILOT PROGRAM AND PETITIONS TO MAKE THE ABOVE-IDENTIFIED APPLICATION SPECIAL UNDER THE PCT-PPH PILOT PROGRAM.

The above-identified application is (1) a national stage entry of the corresponding PCT application, or (2) a national stage entry of another PCT application which claims priority to the corresponding PCT application, or (3) a national application that claims domestic/ foreign priority to the corresponding PCT application, or (4) a national application which forms the basis for the priority claim in the corresponding PCT application, or (5) a continuing application of a U.S. application that satisfies one of (1) to (4) above, or (6) a U.S. application that claims domestic benefit to a U.S. provisional application which forms the basis for the priority claim in the corresponding PCT application.

The corresponding PCT application number(s) is/are: PCT/IL2011/00356

The international filing date of the corresponding PCT application(s) is/are: 05 May 2011

I. List of Required Documents:

a. **A copy of the latest international work product (WO/ISA, WO/IPEA, or IPER) in the above-identified corresponding PCT application(s)**

☑ is attached.

☐ is not attached because the document is already in the U.S. application.

b. **A copy of all claims which were indicated as having novelty, inventive step and industrial applicability in the above-identified corresponding PCT application(s)**

☑ is attached.

☐ is not attached because the document is already in the U.S. application.

c. **English translations of the documents in a. and b. above are attached (if the documents are not in the English language). A statement that the English translation is accurate is attached for the document in b. above.**

d. **(1) An information disclosure statement listing the documents cited in the international work products (ISR, WO/ISA, WO/IPEA, IPER) of the corresponding PCT application.**

☑ is attached.

☐ has already been filed in the above-identified U.S. application on _____

(2) Copies of all documents (except for U.S. patents or U.S. patent application publications)

☐ are attached. (only US documents cited)

☒ have already been filed in the above-identified U.S. application on February 21, 2012

This collection of information is required by 35 U.S.C. 119, 37 CFR 1.55, and 37 CFR 1.102(d). The information is required to obtain or retain a benefit by the public, which is to file (and by the USPTO to process) an application. Confidentiality is governed by 35 U.S.C. 122 and 37 CFR 1.11 and 1.14. This collection is estimated to take 2 hours to complete, including gathering, preparing, and submitting the completed application form to the USPTO. Time will vary depending upon the individual case. Any comments on the amount of time you require to complete this form and/or suggestions for reducing this burden should be sent to the Chief Information Officer, U.S. Patent and Trademark Office, U.S. Department of Commerce, P.O. Box 1450, Alexandria, VA 22313-1450. DO NOT SEND FEES OR COMPLETED FORMS TO THIS ADDRESS.

Under the Paperwork Reduction Act of 1995, no persons are required to respond to a collection of information unless it displays a valid OMB control number.

REQUEST FOR PARTICIPATION IN THE PCT-PPH PILOT PROGRAM IN A U.S. APPLICATION WHERE THE USPTO WAS THE ISA OR IPEA

(continued)

Application No.:	13/030,384	First Named Inventor:	Yossi Gross

II. Claims Correspondence Table:

Claims in US Application	Patentable Claims in the corresponding PCT application	Explanation regarding the correspondence
1-15	1-15	Identical except for removal of multiple dependencies
71-85	41-55	Identical except for removal of multiple dependencies
86-100	122-136	Identical except for removal of multiple dependencies

III. All the claims in the US application sufficiently correspond to the patentable claims in the corresponding PCT application.

Signature	Date Feb. 17, 2012
Name (Print/Typed) James M. Heslin	Registration Number 29,541

UNITED STATES PATENT AND TRADEMARK OFFICE

Commissioner for Patents
United States Patent and Trademark Office
P.O. Box 1450
Alexandria, VA 22313-1450
www.uspto.gov

BUCHANAN, INGERSOLL & ROONEY PC
POST OFFICE BOX 1404
ALEXANDRIA VA 22313-1404

MAILED

MAY 06 2011

OFFICE OF PETITIONS

In re Application of
BARUH, Bradford G.
Application No. 13/030,386
Filed: February 18, 2011
Attorney Docket No. **1033151-000046**

DECISION ON PETITION
TO MAKE SPECIAL UNDER
37 CFR 1.102(c)(1)

This is a decision on the petition under 37 CFR 1.102(c)(1), filed February 18, 2011, to make the above-identified application special based on applicant's age as set forth in M.P.E.P. § 708.02, Section IV.

The petition is **GRANTED**.

A grantable petition to make an application special under 37 CFR 1.102(c)(1) and MPEP § 708.02, Section IV: Applicant's Age must be accompanied by evidence showing that at least one of the applicants is 65 years of age, or more, such as a birth certificate or a statement by applicant. No fee is required

The instant petition includes the declaration of inventor Bradford Baruh's, attesting to his age. Accordingly, the above-identified application has been accorded "special" status.

Telephone inquiries concerning this decision should be directed to Tredelle Jackson at 571-272-2783.

All other inquiries concerning either the examination or status of the application should be directed to the Technology Center.

The application is being forwarded to the Technology Center Art Unit 3617 for action on the merits commensurate with this decision.

/Tredelle D. Jackson/
Paralegal Specialist
Office of Petitions

UNITED STATES PATENT AND TRADEMARK OFFICE

Commissioner for Patents
United States Patent and Trademark Office
P.O. Box 1450
Alexandria, VA 22313-1450
www.uspto.gov

DRINKER BIDDLE & REATH (DC)
1500 K STREET, N.W.
SUITE 1100
WASHINGTON DC 20005-1209

MAILED
JAN 26 2012
OFFICE OF PETITIONS

In re Application of
Masuo Kokura et al.
Application No.: 13/030,431
Filed: February 18, 2011
Attorney Docket No.: 201252-0044
(461998)
For: Programmable Controller for Executing a Plurality of Independent Sequence Programs in Parallel

: DECISION ON REQUEST TO
: PARTICIPATE IN THE PATENT
: PROSECUTION HIGHWAY
: PROGRAM AND PETITION
: TO MAKE SPECIAL UNDER
: 37 CFR 1.102(a)

This is a decision on the request to participate in the Patent Prosecution Highway (PPH) program and the petition under 37 CFR 1.102(a), filed September 20, 2011, to make the above-identified application special.

The request and petition are **GRANTED**.

Discussion

A grantable request to participate in the PPH pilot program and petition to make special require:

1. The U.S. application is

    a. a Paris Convention application which either
        i. validly claims priority under 35 U.S.C. 119(a) and 37 CFR 1.55 to one or more applications filed in the JPO, or
        ii. validly claims priority to a PCT application that contains no priority claims, or
    b. a national stage application under the PCT (an application which entered the national stage in the U.S. from a PCT international application after compliance with 35 U.S.C. 371), which PCT application
        i. validly claims priority to an application filed in the JPO, or
        ii. validly claims priority to a PCT application that contains no priority claims, or
        iii. contains no priority claim, or
    c. a so-called bypass application filed under 35 U.S.C. 111(a) which validly claims benefit under 35 U.S.C. 120 to a PCT application, which PCT application
        i. validly claims priority to an application filed in the JPO, or

ii. validly claims priority to a PCT application that contains no priority claims, or
iii. contains no priority claim;

2. Applicant must submit a copy of:
   a. The allowable/patentable claim(s) from the JPO application(s);
   b. An English translation of the allowable/patentable claim(s) and
   c. A statement that the English translation is accurate;
3. Applicant must:
   a. Ensure all the claims in the U.S. application must sufficiently correspond or be amended to sufficiently correspond to the allowable/patentable claim(s) in the JPO application(s) and
   b. Submit a claims correspondence table in English;
4. Examination of the U.S. application has <u>not</u> begun;
5. Applicant must submit:
   a. Documentation of prior office action:
      i. a copy of the office action(s) just prior to the "Decision to Grant a Patent" from each of the JPO application(s) containing the allowable/patentable claim(s) or
      ii. if the allowable/patentable claims(s) are from a "Notification of Reasons for Refusal" then the Notification of Reasons for Refusal or
      iii. if the JPO application is a first action allowance then no office action from the JPO is necessary should be indicated on the request/petition form;
   b. An English language translation of the JPO Office action from (5)(a)(i)-(ii) above
   c. A statement that the English translation is accurate;
6. Applicant must submit:
   a. An IDS listing the documents cited by the JPO examiner in the JPO office action (unless already submitted in this application)
   b. Copies of the documents except U.S. patents or U.S. patent application publications (unless already submitted in this application);

The request to participate in the PPH pilot program and petition comply with the above requirements. Accordingly, the above-identified application has been accorded "special" status.

Inquiries concerning this decision should be directed to Kimberly Inabinet at 571-272-4618.

All other inquiries concerning the examination or status of the application is accessible in the PAIR system at http://www.uspto.gov/ebc.index.html.

This application will be forwarded to the examiner for action on the merits commensurate with this decision once this application's formality reviews have been completed.

David Bucci
Petitions Examiner
Office of Petitions

OPAP IAP8 MAY 11 2011 PATENT & TRADEMARK OFFICE

Attorney Docket No.: 22924US02

IN THE UNITED STATES PATENT AND TRADEMARK OFFICE

In the Application of:	
Samson Tom et al.	Examiner: Not Yet Assigned
Serial No.: 13/030,507	Group Art Unit: 1646
Filed: February 18, 2011	Conf. No.: 2848
For: IMMUNOCOMPATIBLE CHORIONIC MEMBRANE PRODUCTS	

PETITION TO ACCEPT COLOR DRAWINGS IN AN APPLICATION AND RESPONSE TO NOTICE TO FILED CORRECTED APPLICATION PAPERS

Commissioner for Patents
P.O. Box 1450
Alexandria, VA 22313-1450

Dear Sirs:

This response is filed to petition the Office to accept the color drawings in this application in the format submitted herewith, to amend the specification to make reference to color drawings, and also to respond to the Notice to File Corrected Application Papers mailed on March 7, 2011. This paper is being timely filed within the two month time period given by the Notice, since such deadline fell on Saturday May 7, this response is timely filed the next business day, Monday May 9.

Amendments to the Specification begin on page **2** of this paper.

Amendments to the claims begin on page **3** of this paper.

Remarks begin on page **8** of this paper.

05/11/2011 SDENBOB3 00000054 130017 13030507
01 FC:1464 130.00 DA

UNITED STATES PATENT AND TRADEMARK OFFICE

Commissioner for Patents
United States Patent and Trademark Office
P.O. Box 1450
Alexandria, VA 22313-1450
www.uspto.gov

In re Application of
Arthur J. Paone

Application No. 13030568

Filed:

Attorney Docket No.

:
:
:DECISION ON PETITION TO MAKE SPECIAL
:UNDER 37 CFR 1.102(c)(1)
:

This is a decision on the electronic petition under 37 CFR 1.102 (c)(1), filed 28-FEB-2011 to make the above-identified application special based on applicant's age as set forth in MPEP § 708.02, Section IV.

The petition is **GRANTED**.

A grantable petition to make an application special under 37 CFR 1.102(c)(1), MPEP § 708.02, Section IV: Applicant's Age must include a statement by applicant or a registered practitioner having evidence that applicant is at least 65 years of age. No fee is required.

Accordingly, the above-identified application has been accorded "special" status and will be taken up for action by the examiner upon the completion of all pre-examination processing.

Telephone inquiries concerning this electronic decision should be directed to the Electronic Business Center at 866-217-9197.

All other inquiries concerning either the examination or status of the application should be directed to the Technology Center.

Docket No.: 10694.00093.US00
(PATENT)

IN THE UNITED STATES PATENT AND TRADEMARK OFFICE

In re Patent Application of: JEONG, Hwan Hee	Customer No.: 30827
Application No.: 13/030,600	Confirmation No.:3059
Filed: February 18, 2011	Art Unit: TBA
For: LIGHT EMITTING DEVICE, LIGHT EMITTING DEVICE PACKAGE, METHOD OF MANUFACTURING LIGHT EMITTING DEVICE AND ILLUMINATION SYSTEM	Examiner: TBA

MS Petitions
Commissioner for Patents
P.O. Box 1450
Alexandria, VA 22313-1450

STATEMENT IN SUPPORT OF PETITION TO MAKE SPECIAL UNDER THE GREEN TECHNOLOGY PILOT PROGRAM

Sir:

This Statement of Special Status is filed in conjunction with a Petition to Make Special Under the Green Technology Pilot Program.

The above-referenced application pertains to environmental quality, i.e. enhancing the quality of the environment by using light emitting diode (LED). Special status is sought because the invention materially contributes to the more efficient utilization and conservation of energy resources by using LED which provides lower power consumption, a longer life span and significant energy saving.

Dated: May 18, 2011

Respectfully submitted,

By *__/Randall C. Pyles/_____*

Randall C. Pyles
Registration No.: 66,523
McKENNA LONG & ALDRIDGE LLP
1900 K Street, N.W.
Washington, DC 20006
(202) 496-7500
Attorneys for Applicant

Doc Code: PET.GREEN
Document Description: Petition for Green Tech Pilot

PTO/SB/420 (03-11)

PETITION TO MAKE SPECIAL UNDER THE GREEN TECHNOLOGY PILOT PROGRAM

Attorney Docket Number: 10694.00093.US00	Application Number (if known): 13/030,600	Filing date: February 18, 2011

First Named Inventor: Hwan Hee Jeong

Title: Light Emitting Device, Method of Manufacturing the Light Emitting Device, Light Emitting Device Package, and Lighting Unit

APPLICANT HEREBY REQUESTS TO PARTICIPATE IN THE GREEN TECHNOLOGY PILOT PROGRAM FOR THE ABOVE-IDENTIFIED APPLICATION. See Instruction Sheet on page 2.

This petition must be timely filed electronically using the USPTO electronic filing system, EFS-Web.

1. By filing this petition:

   Applicant is requesting early publication: Applicant hereby requests early publication under 37 CFR 1.219 and the publication fee set forth in 37 CFR 1.18(d) accompanies this request.

2. By filing this petition: applicant is agreeing to make an election without traverse in a telephonic interview and elect an invention that meets the eligibility requirements for the Green Technology Pilot Program, if the Office determines that the claims are not obviously directed to a single invention. See Instruction Sheet.

3. This request is accompanied by statements of special status for the eligibility requirement.

4. The application contains no more than three (3) independent claims and twenty (20) total claims.

5. The application does not contain any multiple dependent claims.

6. Other attachments: Statement In Support of Petition to Make Special

Signature /Randall C. Pyles/	Date May 18, 2011
Name (Print/Typed) Randall C. Pyles	Registration Number 66,523

Note: Signatures of all the inventors or assignees of record of the entire interest or their representative(s) are required in accordance with 37 CFR 1.33 and 11.18. Please see 37 CFR 1.4(d) for the form of the signature. If necessary, submit multiple forms for more than one signature, see below.*

☒ *Total of 1 forms are submitted.

If you need assistance in completing the form, call 1-800-PTO-9199 and select option 2.

UNITED STATES PATENT AND TRADEMARK OFFICE

UNITED STATES DEPARTMENT OF COMMERCE
United States Patent and Trademark Office
Address: COMMISSIONER FOR PATENTS
P.O. Box 1450
Alexandria, Virginia 22313-1450
www.uspto.gov

APPLICATION NO.	FILING DATE	FIRST NAMED INVENTOR	ATTORNEY DOCKET NO.	CONFIRMATION NO.
13/030,600	02/18/2011	Hwan Hee Jeong	10694.00093.US00	3059

30827 7590 05/25/2011
MCKENNA LONG & ALDRIDGE LLP
1900 K STREET, NW
WASHINGTON, DC 20006

EXAMINER

ART UNIT	PAPER NUMBER
2811	

MAIL DATE	DELIVERY MODE
05/25/2011	PAPER

Please find below and/or attached an Office communication concerning this application or proceeding.

The time period for reply, if any, is set in the attached communication.

UNITED STATES PATENT AND TRADEMARK OFFICE

Commissioner for Patents
United States Patent and Trademark Office
P.O. Box 1450
Alexandria, VA 22313-1450
www.uspto.gov

MCKENNA LONG & ALDRIDGE LLP
1900 K STREET, NW
WASHINGTON DC 20006

In re Application of	:	
JEONG et al.	:	DECISION ON PETITION
Application No. 13/030,600	:	TO MAKE SPECIAL UNDER
Filed: February 18, 2011	:	THE GREEN TECHNOLOGY
Attorney Docket No. 10694.00093.US00	:	PILOT PROGRAM

This is a decision on the petition under 37 CFR 1.102, filed on May 18, 2011, to make the above-identified application special under the pilot program for applications pertaining to Green Technologies as set forth 74 Federal Register Notice 64666 (December 8, 2009) and amended by 75 Federal Register Notice 28554 (May 21, 2010) and 75 Federal Register Notice 69049 (November 10, 2010).

The petition is **GRANTED**.

A grantable petition to make an application special under 37 CFR 1.102 and the pilot program as set forth in 74 FR 64666 must be directed to a nonprovisional application filed under 35 USC 111(a) or be a national stage entry under 35 USC 371, exclusive of any reissue applications.

In order to qualify for special status, the following requirements must be met. 1) The application must have no more than 3 independent claims and no more than 20 total claims. 2) The application must not contain any multiple dependent claims. 3) The petition must state the basis for seeking special status, i.e., the claimed invention either: A) materially enhances the quality of the environment or B) materially contributes to: i) the discovery or development of renewable energy resources, ii) the more efficient utilization and conservation of energy resources, or iii) greenhouse gas emission reduction. 4) If the disclosure is not clear on its face that the claimed invention materially contributes under category (A) or (B), the petition must be accompanied by a statement by the applicant, assignee, or an attorney/agent registered to practice before the Office explaining how the materiality standard is met. 5) A statement that applicant will agree to make an election without traverse in a telephonic interview if a restriction requirement is made by the examiner. 6) The petition to make special must be filed electronically. 7) The petition must be filed at least one day prior to the date that a first Office Action appears in the Patent Application Information Retrieval (PAIR) system. 8) The petition must be accompanied by a request for early publication in compliance with 37 CFR 1.219 and include the publication fee as set forth in 37 CFR 1.18(d).

The requirement for a fee for consideration of the petition to make special for applications pertaining to Green Technologies has been waived.

The instant petition complies with items 1 – 8 above. Accordingly, the above-identified application has been accorded "special" status.

Telephone inquires concerning this decision should be directed to Lee W. Young at 571-272-4549.

The application is being forwarded to the Technology Center Art Unit 2811 for action on the merits commensurate with this decision.

Lee W. Young
Quality Assurance Specialist
Technology Center 2800

UNITED STATES PATENT AND TRADEMARK OFFICE

Commissioner for Patents
United States Patent and Trademark Office
P.O. Box 1450
Alexandria, VA 22313-1450
www.uspto.gov

MAILED

NOV 16 2011

OFFICE OF PETITIONS

RATNERPRESTIA
P.O. BOX 980
VALLEY FORGE PA 19482

Applicants: Melville Mitchell, et al.
Appl. No.: 13/030,652
Filing Date: February 18, 2011
Title: PREPARATION OF OPIATE ANALGESICS BY REDUCTIVE ALKYLATION
Attorney Docket: JMYT-376US1
Pub. No.: US 20110144341 A1
Pub. Date: June 16, 2011

This is a decision on the request for a corrected patent application publication under 37 CFR 1.221(b), received on August 15, 2011, for the above-identified application.

The request is granted.

The corrected patent application publication will be published in due course, unless the patent issues before the application is republished.

Inquiries relating to this matter may be directed to Karen Creasy at (571) 272-3208.

/Christopher Bottorff/

Christopher Bottorff
Petitions Examiner
Office of Petitions

UNITED STATES PATENT AND TRADEMARK OFFICE

Commissioner for Patents
United States Patent and Trademark Office
P.O. Box 1450
Alexandria, VA 22313-1450
www.uspto.gov

MAILED

MAR 09 2012

OFFICE OF PETITIONS

PAUL AND PAUL
2000 MARKET STREET
SUITE 2900
PHILADELPHIA PA 19103

In re Application of	:	
Noubar YEREMIAN	:	
Application No. 13/030,681	:	DECISION ON PETITION
Filed: February 18, 2011	:	TO WITHDRAW
Attorney Docket No. 004-11	:	FROM RECORD
	:	

This is a decision on the Request to Withdraw as attorney or agent of record under 37 C.F.R. § 1.36(b), filed February 3, 2012.

The request is **NOT APPROVED** because it is moot.

A review of the file record indicates that the power of attorney to John J. Simkanich, has been revoked by the applicant of the patent application on February 14, 2012. Accordingly, the request to withdraw under 37 C.F.R. § 1.36(b) is moot.

Telephone inquires concerning this decision should be directed to undersigned at (571) 272-6735.

/Diane Goodwyn/
Diane Goodwyn
Petitions Examiner
Office of Petitions

cc: NOUBAR YEREMIAN
360 UPPER GULPH ROAD
RADNOR PA 19087

UNITED STATES PATENT AND TRADEMARK OFFICE

Commissioner for Patents
United States Patent and Trademark Office
P.O. Box 1450
Alexandria, VA 22313-1450
www.uspto.gov

Decision Date : January 24, 2012

In re Application of :

Uday Chandrasekhar

DECISION ON PETITION

UNDER CFR 1.313(c)(2)

Application No : 13030701

Filed : 18-Feb-2011

Attorney Docket No : 400.653US02

This is an electronic decision on the petition under 37 CFR 1.313(c)(2), filed January 24, 2012 , to withdraw the above-identified application from issue after payment of the issue fee.

The petition is **GRANTED.**

The above-identified application is withdrawn from issue for consideration of a submission under 37 CFR 1.114 (request for continued examination). See 37 CFR 1.313(c)(2).

Petitioner is advised that the issue fee paid in this application cannot be refunded. If, however, this application is again allowed, petitioner may request that it be applied towards the issue fee required by the new Notice of Allowance.

Telephone inquiries concerning this decision should be directed to the Patent Electronic Business Center (EBC) at 866-217-9197.

This application file is being referred to Technology Center AU 2827 for processing of the request for continuing examination under 37 CFR 1.114 .

Office of Petitions

Doc Code: PET.AUTO Document Description: Petition automatically granted by EFS-Web	PTO/SB/140 U.S. Patent and Trademark Office Department of Commerce

Electronic Petition Request	**PETITION TO WITHDRAW AN APPLICATION FROM ISSUE AFTER PAYMENT OF THE ISSUE FEE UNDER 37 CFR 1.313(c)**
Application Number	13030701
Filing Date	18-Feb-2011
First Named Inventor	Uday Chandrasekhar
Art Unit	2827
Examiner Name	THONG LE
Attorney Docket Number	400.653US02
Title	SENSING FOR MEMORY READ AND PROGRAM VERIFY OPERATIONS IN A NON-VOLATILE MEMORY DEVICE

An application may be withdrawn from issue for further action upon petition by the applicant. To request that the Office withdraw an application from issue, applicant must file a petition under this section including the fee set forth in § 1.17(h) and a showing of good and sufficient reasons why withdrawal of the application from issue is necessary.

APPLICANT HEREBY PETITIONS TO WITHDRAW THIS APPLICATION FROM ISSUE UNDER 37 CFR 1.313(c).

A grantable petition requires the following items:
(1) Petition fee; and
(2) One of the following reasons:
(a) Unpatentability of one or more claims, which must be accompanied by an unequivocal statement that one or more claims are unpatentable, an amendment to such claim or claims, and an explanation as to how the amendment causes such claim or claims to be patentable;
(b) Consideration of a request for continued examination in compliance with § 1.114 (for a utility or plant application only); or
(c) Express abandonment of the application. Such express abandonment may be in favor of a continuing application, but not a CPA under 37 CFR 1.53(d).

Petition Fee

☐ Applicant claims SMALL ENTITY status. See 37 CFR 1.27.

☐ Applicant is no longer claiming SMALL ENTITY status. See 37 CFR 1.27(g)(2).

☐ Applicant(s) status remains as SMALL ENTITY.

☒ Applicant(s) status remains as other than SMALL ENTITY

Reason for withdrawal from issue

○ One or more claims are unpatentable

◉ Consideration of a request for continued examination (RCE) (List of Required Documents and Fees)

○ Applicant hereby expressly abandons the instant application (any attorney/agent signing for this reason must have power of attorney pursuant to 37 CFR 1.32(b)).

RCE request,submission, and fee.

☐ I certify, in accordance with 37 CFR 1.4(d)(4) that : The RCE request ,submission, and fee have already been filed in the above-identified application on

☒ Are attached.

THIS PORTION MUST BE COMPLETED BY THE SIGNATORY OR SIGNATORIES

I certify, in accordance with 37 CFR 1.4(d)(4) that I am:

◉ An attorney or agent registered to practice before the Patent and Trademark Office who has been given power of attorney in this application.

○ An attorney or agent registered to practice before the Patent and Trademark Office, acting in a representative capacity.

○ A sole inventor

○ A joint inventor; I certify that I am authorized to sign this submission on behalf of all of the inventors

○ A joint inventor; all of whom are signing this e-petition

○ The assignee of record of the entire interest that has properly made itself of record pursuant to 37 CFR 3.71

Signature	/Kenneth W. Bolvin/
Name	Kenneth W. Bolvin
Registration Number	34125

UNITED STATES PATENT AND TRADEMARK OFFICE

UNITED STATES DEPARTMENT OF COMMERCE
United States Patent and Trademark Office
Address: COMMISSIONER FOR PATENTS
P.O. Box 1450
Alexandria, Virginia 22313-1450
www.uspto.gov

APPLICATION NO.	FILING DATE	FIRST NAMED INVENTOR	ATTORNEY DOCKET NO.	CONFIRMATION NO.
13/030,728	02/18/2011	Thomas Kruspe	NMR4-40193-USC	3327

87884 7590 06/15/2011
Mossman, Kumar and Tyler, PC
P.O. Box 421239
Houston, TX 77242

EXAMINER
HARCOURT, BRAD

ART UNIT	PAPER NUMBER
3676	

NOTIFICATION DATE	DELIVERY MODE
06/15/2011	ELECTRONIC

Please find below and/or attached an Office communication concerning this application or proceeding.

The time period for reply, if any, is set in the attached communication.

Notice of the Office communication was sent electronically on above-indicated "Notification Date" to the following e-mail address(es):

docket@mktlaw.us.com
tthigpen@mktlaw.us.com

UNITED STATES PATENT AND TRADEMARK OFFICE

JUN 14 2011

Commissioner for Patents
United States Patent and Trademark Office
P.O. Box 1450
Alexandria, VA 22313-1450
www.uspto.gov

Mossman Kumar & Tyler PC
P.O. Box 421239
Houston, TX 77242

In re Application of Thomas Kruspe
Appl. No.: 13/030,728
Filed: February 18, 2011
For: Methods and Apparatus for Demagnetizing a Borehole

DECISION ON PETITION UNDER 37 CFR 1.84(a)(2) TO ACCEPT COLOR PHOTOGRAPHS

This is a decision on the petition under 37 CFR § 1.84(a)(2), filed March 18, 2011, to accept color photographs.

The Petition is **Granted.**

A petition under 37 CFR 1.84(a) (2) must contain:

(A) An explanation why the color drawings are necessary;

(B) The fee set forth in §1.17(h);

(C) Three (3) sets of color drawings;

(D) An amendment to the specification to insert the following language as the first paragraph of the brief description of the drawings:
The patent or application file contains at least one drawing executed in color. Copies of this patent or patent application publication with color drawing(s) will be provided by the Office upon request and payment of the necessary fee.

The petition includes all of items (A)-(D).

Telephone inquiries concerning this matter should be directed to the undersigned at (571) 272-7026.

Thomas Shane Bomar
Supervisory Patent Examiner
Technology Center 3600

UNITED STATES PATENT AND TRADEMARK OFFICE

Commissioner for Patents
United States Patent and Trademark Office
P.O. Box 1450
Alexandria, VA 22313-1450
www.uspto.gov

SUGHRUE MION, PLLC
2100 PENNSYLVANIA AVENUE, N.W.
SUITE 800
WASHINGTON DC 20037

MAILED
APR 16 2012
OFFICE OF PETITIONS

In re Application of	:	
Ralf Arnold, et al.	:	
Application No. 13/030,748	:	DECISION GRANTING PETITION
Filed: February 18, 2011	:	UNDER 37 CFR 1.313(c)(2)
Attorney Docket No. Q123084	:	

This is a decision on the petition under 37 CFR 1.313(c)(2), filed, April 12, 2012 to withdraw the above-identified application from issue after payment of the issue fee.

The petition is **GRANTED**.

The above-identified application is withdrawn from issue for consideration of a submission under 37 CFR 1.114 (request for continued examination). *See* 37 CFR 1.313(c)(2).

Petitioner is advised that the issue fee paid on March 16, 2012 cannot be refunded. If, however, this application is again allowed, petitioner may request that it be applied towards the issue fee required by the new Notice of Allowance.[1]

Telephone inquiries should be directed to Terri Johnson at (571) 272-2991.

This application is being referred to Technology Center AU 2886 for processing of the request for continued examination under 37 CFR 1.114 and for consideration of the concurrently filed information disclosure statement.

/Terri Johnson/
Terri Johnson
Petitions Examiner
Office of Petitions

---

[1] *The request to apply the issue fee to the new Notice may be satisfied by completing and returning the new Part B – Fee(s) Transmittal Form (along with any balance due at the time of submission). Petitioner is advised that the Issue Fee Transmittal Form* ***must*** *be completed and timely submitted to avoid abandonment of the application.*

UNITED STATES PATENT AND TRADEMARK OFFICE

Commissioner for Patents
United States Patent and Trademark Office
P.O. Box 1450
Alexandria, VA 22313-1450
www.uspto.gov

Jordan and Hamburg LLP
122 East 42nd Street
Suite 4000
New York, NY 10168

MAILED
MAY 23 2011
PCT LEGAL ADMINISTRATION

In re Application of: PARK et al.	:	
U.S. Application No.: 13/030,782	:	
Filing Date: February 18, 2011	:	
Attorney's Docket No.: F-10552	:	DECISION
For: METHOD FOR PREPARING LOW-FAT ICE CREAM AND A LOW-FAT ICE CREAM PREPARED BY THE METHOD	:	

This decision is issued in response to applicant's "Petition under 37 CFR 1.181 " to seek designation of the application as a U.S. National Stage Application filed February 18, 2011. Applicant requests that the present application be treated as a U.S. National Phase of PCT/KR2009/004680 filed under 35 U.S.C. 371.

BACKGROUND

On August 21, 2009, applicant filed international application PCT/KR2009/004680 which claimed a priority date of August 25, 2008. The deadline for submission of the basic national fee was thirty months from the priority date, i.e., February 25, 2011.

On February 18, 2011, applicant initiated the present application by filing electronically a Transmittal Letter requesting entry into the U.S. national stage for international application PCT/KR2009/004680. The Transmittal Letter was accompanied by, among other materials, twenty one (21) page specification, three (3) pages of claims, and an abstract; an application data sheet; and a $657 fee payment.

During the electronic filing process, applicant identified the present application as a "Utility under 35 U.S.C. 111(a)" application, rather than a national stage application filed under 35 U.S.C. 371. Accordingly, the application was processed by the United States Patent and Trademark Office (USPTO) as a filing under 35 U.S.C. 111(a).

On March 24, 2011, applicant filed the "Petition under 37 CFR 1.181" considered herein.

DISCUSSION

The USPTO has adopted a bright-line test for determining whether application papers will be processed under 35 U.S.C. 371 or alternatively under 35 U.S.C. 111(a). Under this standard, any intended filing of an international application as a national stage application must clearly and unambiguously be identified as such and must satisfy all of the conditions set forth in 35 U.S.C. 371(c). See 37 CFR 1.495(g):

> The documents and fees submitted . . . must be clearly identified as a submission to enter the national stage under 35 U.S.C. 371. Otherwise the submission will be considered as being made under 35 U.S.C. 111(a).

In addition, section 1893.03(a) of the MPEP states that:

> If there are any conflicting instructions as to whether the filing is under 35 U.S.C. 111(a) or 35 U.S.C. 371, the application will be accepted as filed under 35 U.S.C. 111(a).

The Transmittal Letter (and Application Data Sheet) electronically filed by applicant on February 18, 2011 identified the application as a national stage filing under 35 U.S.C. 371. However, during the electronic filing process, applicant selected the application identifier "Utility under 35 U.S.C. 111(a)," rather than the separate application identifier specifically applicable to national stage applications filed under 35 U.S.C. 371. This is evident from the Electronic Acknowledgment Receipt generated at the time of filing, which identifies the application as a "Utility under 35 U.S.C. 111(a)" application rather than a U.S. national stage application filed under 35 U.S.C. 371.

Applicant's identification of the application during the electronic filing process as a utility application filed under 35 U.S.C. 111(a) is a conflicting instruction that is not consistent with the intent to file a U.S. national stage application under 35 U.S.C. 371. Accordingly, the present application was properly treated by the USPTO as a filing under 35 U.S.C. 111(a). Applicant's request to have the application treated as a filing under 35 U.S.C. 371 is therefore appropriately dismissed.

Since the application is being treated as a filing under 35 U.S.C. 111(a), applicants have not properly claimed benefit of the international application in accordance with 35 U.S.C. 120 and 37 CFR 1.78(a) and, the instant application cannot be considered as a continuing application of PCT/KR2009/004680. In order to claim benefit under 35 U.S.C. 120 to the prior-filed PCT application at this point, applicants must file an amended specification or an Application Data Sheet. The amended specification (or Application Data Sheet) should be filed within the time period set forth in 37 CFR 1.78(a)(2)(ii).

CONCLUSION

The petition to convert the application to a filing under 35 U.S.C. 371 is **DISMISSED** without prejudice. The present application was properly treated by the USPTO as a filing under 35 U.S.C. 111(a).

Any further correspondence with respect to this matter may be filed electronically via EFS-Web selecting the document description "Petition for review and processing by the PCT Legal Office" or by mail addressed to Mail Stop PCT, Commissioner for Patents, Office of PCT Legal Administration, P.O. Box 1450, Alexandria, Virginia 22313-1450, with the contents of the letter marked to the attention of the Office of PCT Legal Administration.

Anthony Smith
Attorney-Advisor
Office of PCT Legal Administration
Tel: (571) 272-3298
Fax: (571) 273-0459

Doc Code: PET.GREEN
Document Description: Petition for Green Tech Pilot

PTO/SB/420 (03-11)

PETITION TO MAKE SPECIAL UNDER THE GREEN TECHNOLOGY PILOT PROGRAM

Attorney Docket Number: 10694.00090.US00	Application Number (if known): 13/030,813	Filing date: February 18, 2011

First Named Inventor: Jung Hyeok Bae

Title: Light Emitting Device And Light Emitting Device Package

APPLICANT HEREBY REQUESTS TO PARTICIPATE IN THE GREEN TECHNOLOGY PILOT PROGRAM FOR THE ABOVE-IDENTIFIED APPLICATION. See Instruction Sheet on page 2.

This petition must be timely filed electronically using the USPTO electronic filing system, EFS-Web.

1. By filing this petition:

   Applicant is requesting early publication: Applicant hereby requests early publication under 37 CFR 1.219 and the publication fee set forth in 37 CFR 1.18(d) accompanies this request.

2. By filing this petition: applicant is agreeing to make an election without traverse in a telephonic interview and elect an invention that meets the eligibility requirements for the Green Technology Pilot Program, if the Office determines that the claims are not obviously directed to a single invention. See Instruction Sheet.

3. This request is accompanied by statements of special status for the eligibility requirement.

4. The application contains no more than three (3) independent claims and twenty (20) total claims.

5. The application does not contain any multiple dependent claims.

6. Other attachments: Statement In Support of Petition to Make Special

Signature /Randall C. Pyles/	Date May 19, 2011
Name (Print/Typed) Randall C. Pyles	Registration Number 66,523

Note: *Signatures of all the inventors or assignees of record of the entire interest or their representative(s) are required in accordance with 37 CFR 1.33 and 11.18. Please see 37 CFR 1.4(d) for the form of the signature. If necessary, submit multiple forms for more than one signature, see below*.*

☒ *Total of 1 forms are submitted.

If you need assistance in completing the form, call 1-800-PTO-9199 and select option 2.

Docket No.: 10694.00090.US00
(PATENT)

IN THE UNITED STATES PATENT AND TRADEMARK OFFICE

In re Patent Application of: BAE, Jung Hyeok	Customer No.: 30827
Application No.: 13/030,813	Confirmation No.: 3495
Filed: February 18, 2011	Art Unit: TBA
For: LIGHT EMITTING DEVICE AND LIGHT EMITTING DEVICE PACKAGE	Examiner: TBA

MS Petitions
Commissioner for Patents
P.O. Box 1450
Alexandria, VA 22313-1450

STATEMENT IN SUPPORT OF PETITION TO MAKE SPECIAL UNDER THE GREEN TECHNOLOGY PILOT PROGRAM

Sir:

This Statement of Special Status is filed in conjunction with a Petition to Make Special Under the Green Technology Pilot Program.

The above-referenced application pertains to environmental quality, i.e. enhancing the quality of the environment by using light emitting diode (LED). Special status is sought because the invention materially contributes to the more efficient utilization and conservation of energy resources by using LED which provides lower power consumption, a longer life span and significant energy saving.

Respectfully submitted,

Dated: May 19, 2011

By /Randall C. Pyles/

Randall C. Pyles
Registration No.: 66,523
McKENNA LONG & ALDRIDGE LLP
1900 K Street, N.W.
Washington, DC 20006
(202) 496-7500
Attorneys for Applicant

UNITED STATES PATENT AND TRADEMARK OFFICE

UNITED STATES DEPARTMENT OF COMMERCE
United States Patent and Trademark Office
Address: COMMISSIONER FOR PATENTS
P.O. Box 1450
Alexandria, Virginia 22313-1450
www.uspto.gov

APPLICATION NO.	FILING DATE	FIRST NAMED INVENTOR	ATTORNEY DOCKET NO.	CONFIRMATION NO.
13/030,813	02/18/2011	Jung Hyeok Bae	10694.00090.US00	3495

30827 7590 05/26/2011
MCKENNA LONG & ALDRIDGE LLP
1900 K STREET, NW
WASHINGTON, DC 20006

EXAMINER

ART UNIT	PAPER NUMBER
2811	

MAIL DATE	DELIVERY MODE
05/26/2011	PAPER

Please find below and/or attached an Office communication concerning this application or proceeding.

The time period for reply, if any, is set in the attached communication.

UNITED STATES PATENT AND TRADEMARK OFFICE

Commissioner for Patents
United States Patent and Trademark Office
P.O. Box 1450
Alexandria, VA 22313-1450
www.uspto.gov

MCKENNA LONG & ALDRIDGE LLP
1900 K STREET, NW
WASHINGTON DC 20006

In re Application of	:	
BAE et al.	:	DECISION ON PETITION
Application No. 13/030,813	:	TO MAKE SPECIAL UNDER
Filed: February 18, 2011	:	THE GREEN TECHNOLOGY
Attorney Docket No. 10694.00090.US00	:	PILOT PROGRAM

This is a decision on the petition under 37 CFR 1.102, filed on May 19, 2011, to make the above-identified application special under the pilot program for applications pertaining to Green Technologies as set forth 74 Federal Register Notice 64666 (December 8, 2009) and amended by 75 Federal Register Notice 28554 (May 21, 2010) and 75 Federal Register Notice 69049 (November 10, 2010).

The petition is **GRANTED**.

A grantable petition to make an application special under 37 CFR 1.102 and the pilot program as set forth in 74 FR 64666 must be directed to a nonprovisional application filed under 35 USC 111(a) or be a national stage entry under 35 USC 371, exclusive of any reissue applications.

In order to qualify for special status, the following requirements must be met. 1) The application must have no more than 3 independent claims and no more than 20 total claims. 2) The application must not contain any multiple dependent claims. 3) The petition must state the basis for seeking special status, i.e., the claimed invention either: A) materially enhances the quality of the environment or B) materially contributes to: i) the discovery or development of renewable energy resources, ii) the more efficient utilization and conservation of energy resources, or iii) greenhouse gas emission reduction. 4) If the disclosure is not clear on its face that the claimed invention materially contributes under category (A) or (B), the petition must be accompanied by a statement by the applicant, assignee, or an attorney/agent registered to practice before the Office explaining how the materiality standard is met. 5) A statement that applicant will agree to make an election without traverse in a telephonic interview if a restriction requirement is made by the examiner. 6) The petition to make special must be filed electronically. 7) The petition must be filed at least one day prior to the date that a first Office Action appears in the Patent Application Information Retrieval (PAIR) system. 8) The petition must be accompanied by a request for early publication in compliance with 37 CFR 1.219 and include the publication fee as set forth in 37 CFR 1.18(d).

The requirement for a fee for consideration of the petition to make special for applications pertaining to Green Technologies has been waived.

The instant petition complies with items 1 – 8 above. Accordingly, the above-identified application has been accorded "special" status.

Telephone inquires concerning this decision should be directed to Lee W. Young at 571-272-4549.

The application is being forwarded to the Technology Center Art Unit 2811 for action on the merits commensurate with this decision.

Lee W. Young
Quality Assurance Specialist
Technology Center 2800

UNITED STATES PATENT AND TRADEMARK OFFICE

UNITED STATES DEPARTMENT OF COMMERCE
United States Patent and Trademark Office
Address: COMMISSIONER FOR PATENTS
P.O. Box 1450
Alexandria, Virginia 22313-1450
www.uspto.gov

APPLICATION NO.	FILING DATE	FIRST NAMED INVENTOR	ATTORNEY DOCKET NO.	CONFIRMATION NO.
13/030,822	02/18/2011	Sadaatsu Kato	375783US8CONT	3518

EXAMINER

7590 07/05/2011
OBLON, SPIVAK, MCCLELLAND MAIER & NEUSTADT, L.L.P.
1940 DUKE STREET
ALEXANDRIA, VA 22314

ART UNIT	PAPER NUMBER
2624	

NOTIFICATION DATE	DELIVERY MODE
07/05/2011	ELECTRONIC

DECISION GRANTING PETITION UNDER 37 CFR 1.138(d)

The declaration of express abandonment is recognized

This is in response to the petition under 37 CFR 1.138(d), requesting for a refund of any previously paid search fee and excess claims fee in the above-identified application.

The petition is granted.

The express abandonment is recognized. Any previously paid search fee and excess claims fee are hereby refunded.

Telephone inquiries should be directed to the Office of Data Management at (571) 272-4200.

Nioni Farmer

Patent Publication Branch
Office of Data Management

FORM PET651G (Rev. 08/07)

UNITED STATES PATENT AND TRADEMARK OFFICE

UNITED STATES DEPARTMENT OF COMMERCE
United States Patent and Trademark Office
Address: COMMISSIONER FOR PATENTS
P.O. Box 1450
Alexandria, Virginia 22313-1450
www.uspto.gov

APPLICATION NO.	FILING DATE	FIRST NAMED INVENTOR	ATTORNEY DOCKET NO.	CONFIRMATION NO.
13/030,851	02/18/2011	Takao Yazaki	375027US41TK	3573

22850 7590 06/01/2011
OBLON, SPIVAK, MCCLELLAND MAIER & NEUSTADT, L.L.P.
1940 DUKE STREET
ALEXANDRIA, VA 22314

EXAMINER

ART UNIT	PAPER NUMBER
1741	

NOTIFICATION DATE	DELIVERY MODE
06/01/2011	ELECTRONIC

Please find below and/or attached an Office communication concerning this application or proceeding.

The time period for reply, if any, is set in the attached communication.

Notice of the Office communication was sent electronically on above-indicated "Notification Date" to the following e-mail address(es):

patentdocket@oblon.com
oblonpat@oblon.com
jgardner@oblon.com

UNITED STATES PATENT AND TRADEMARK OFFICE

Commissioner for Patents
United States Patent and Trademark Office
P.O. Box 1450
Alexandria, VA 22313-1450
www.uspto.gov

EL

May 31, 2011

In re application of	:	DECISION ON REQUEST TO
Yazaki, et al.	:	PARTICIPATE IN PATENT
Serial No. 13/030851	:	PROSECUTION HIGHWAY
Filed: February 18, 2011	:	PROGRAM AND
For: **PAPERMAKING PROCESS BELT AND**	:	PETITION TO MAKE SPECIAL
METHOD FOR MAKING THE SAME	:	UNDER 37 CFR 1.102(a)

This is a decision on the request to participate in the Patent Prosecution Highway (PPH) program and the petition under 37 CFR 1.102(a) to make the above-identified application special filed March 25, 2011.

The request and petition are **GRANTED**.

A grantable request to participate in the PPH program and petition to make special require:

(1) The U.S. application must validly claim priority under 35 U.S.C. 119(a) to one or more applications filed in the JPO, note where the JPO application with similar claims is not the same application from which the U.S. application claims priority that the applicant must identify the relationship between the JPO application with similar claims and the JPO priority application;

(2) Applicant must submit a copy of:
   a. The allowable/patentable claim(s) from the JPO application(s) or if a copy of the allowable/patentable claims is available via the Dossier Access System (DAS) applicant may request the USPTO to obtain a copy from DAS; however, if the USPTO is unable to obtain a copy from the DAS, the applicant will be required to submit a copy;
   b. An English translation of the allowable/ patentable claim(s), if applicable; and
   c. A statement that the English translation is accurate, if applicable;

(3) Applicant must:
   a. Ensure all the independent claims in the U.S. application must sufficiently correspond or be amended to sufficiently correspond to the allowable/patentable claim(s) in the JPO application(s); and
   b. Submit a claims correspondence table in English;

(4) Examination of the U.S. application has not begun;

(5) Applicant must submit:

a. Documentation of prior office action:
   i. a copy of the office action(s) just prior to the "Decision to Grant a Patent" from each of the JPO application(s) containing the allowable/patentable claims(s) or
   ii. if the allowable/patentable claim(s) are from "Notification of Reasons for Refusal" then the Notification of Reasons for Refusal or
   iii. if the JPO application is a first action allowance then no office action from the JPO is necessary should be indicated on the request/petition form;
   Further, if a copy of the documents from (i) or (ii) is available via the Dossier Access System (DAS), applicant may request the USPO obtain a copy from the DAS; however, if the USPTO is unable to obtain a copy of the DAS, the applicant will be required to submit a copy; and
b. An English language translation of the JPO Office action from (5)(a)(i)-(ii) above if applicable; and

(6) Applicant must submit:

a. An IDS listing the documents cited by the JPO examiner in the JPO office action (unless already submitted in this application)
b. Copies of documents except U.S. patents or U.S. patent application publications (unless already submitted in this application).

The request to participate in the PPH program and petition comply with the above requirements. Accordingly, the above-identified application has been accorded "special" status.

The application is being forwarded to the examiner for action on the merits commensurate with this decision.

Any inquiry regarding this decision should be directed to Emily M. Le, Supervisory Patent Examiner, at (571) 272-0903.

All other inquiries concerning the examination or status of the application is accessible in the PAIR system at http://www.uspto.gov/ebc/index.html.

/ Emily M. Le/

Emily M. Le
Supervisory Patent Examiner,
Technology Center 1700

UNITED STATES PATENT AND TRADEMARK OFFICE

Commissioner for Patents
United States Patent and Trademark Office
P.O. Box 1450
Alexandria, VA 22313-1450
www.uspto.gov

Decision Date : March 13, 2012

In re Application of :

John Ballatine

Application No : 13030864

Filed : 18-Feb-2011

Attorney Docket No : 16529.0001USU1

DECISION ON REQUEST TO WITHDRAW AS ATTORNEY/AGENTOF RECORD

This is an electronic decision on the Request to Withdraw as attorney or agent of record under 37 CFR § 1.36(b), filed March 13, 2012

The request is **APPROVED.**

The request was signed by Robert A. Kalinsky (registration no. 50471) on behalf of all attorneys/agents associated with Customer Number 23552 . All attorneys/agents associated with Cusotmer Number 23552 have been withdrawn.

Since there are no remaining attorneys of record, all future communications from the Office will be directed to the first named inventor or assignee that has properly made itself of record pursuant to 37 CFR 3.71, with correspondence address:

Name	BevPost, LLC
Name2	John T. Ballantine
Address 1	1430 Louisiana Ave. North
Address 2	
City	Golden Valley
State	MN
Postal Code	55408
Country	US

As a reminder, requester is required to inform the first named inventor or assignee that has properly made itself of record pursuant to 37 CFR 3.71 of the electronically processed petition.

Telephone inquiries concerning this decision should be directed to the Patent Electronic Business Center (EBC) at 866-217-9197.

Office of Petitions

Doc Code: PET.AUTO **Document Description: Petition automatically granted by EFS-Web**	PTO/SB/83 U.S. Patent and Trademark Office Department of Commerce

Electronic Petition Request	**REQUEST FOR WITHDRAWAL AS ATTORNEY OR AGENT AND CHANGE OF CORRESPONDENCE ADDRESS**
Application Number	13030864
Filing Date	18-Feb-2011
First Named Inventor	John Ballatine
Art Unit	3622
Examiner Name	ERIC STAMBER
Attorney Docket Number	16529.0001USU1
Title	Beverage Advertising Models

◉ Please withdraw me as attorney or agent for the above identified patent application and the practitioners of record associated with Customer Number: 23552

The reason(s) for this request are those described in 37 CFR:

10.40(c)(1)(vi)

Certifications

☒ I/We have given reasonable notice to the client, prior to the expiration of the response period, that the practitioner(s) intend to withdraw from employment

☒ I/We have delivered to the client or a duly authorized representative of the client all papers and property (including funds) to which the client is entitled

☒ I/We have notified the client of any responses that may be due and the time frame within which the client must respond

Change the correspondence address and direct all future correspondence to the first named inventor or assignee that has properly made itself of record pursuant to 37 CFR 3.71:

Name	BevPost, LLC John T. Ballantine
Address	1430 Louisiana Ave. North
City	Golden Valley
State	MN
Postal Code	55408
Country	US

I am authorized to sign on behalf of myself and all withdrawing practitioners.	
Signature	/Robert Kalinsky/
Name	Robert A. Kalinsky
Registration Number	50471

UNITED STATES PATENT AND TRADEMARK OFFICE

Commissioner for Patents
United States Patent and Trademark Office
P.O. Box 1450
Alexandria, VA 22313-1450
www.uspto.gov

MAILED
MAR 21 2012
OFFICE OF PETITIONS

BRIAN STEINBERGER/UCF
101 BREVARD AVENUE
COCOA FL 32922

In re Application of	:
Malocha, et al.	: DECISION ON PETITION
Application No. 13/030,906	:
Filing Date: February 18, 2011	:
Atty. Dkt. No.: UCF-560CIP.DIV	:

This decision is in response to the petition to revive under 37 CFR 1.137(b), filed February 28, 2012.

The petition is **GRANTED**.

This application became abandoned February 2, 2012 for failure to timely reply to the Notice of Allowance (Notice) mailed November 1, 2011. The Notice set a three (3) month statutory period of time for reply. Notice of Abandonment was mailed February 16, 2012.

A grantable petition under 37 CFR 1.137(b) must be accompanied by: (1) the required reply; (2) the petition fee as set forth in 37 CFR 1.17(m); (3) a statement that the entire delay in filing the required reply from the due date for the reply until the filing of a grantable petition pursuant to 37 CFR 1.137(b) was unintentional; and (4) any terminal disclaimer (and fee as set forth in 37 CFR 1.20(d)) required by 37 CFR 1.137(d). Where there is a question as to whether either the abandonment or the delay in filing a petition under 37 CFR 1.137 was unintentional, the Director may require additional information. See MPEP 711.03(c)(II)(C) and (D).

The instant petition has been carefully reviewed and found in compliance with the requirements set forth above.

In view thereof, this application is being forwarded to the Office of Data Management for further processing.

Telephone inquiries concerning this matter may be directed to the undersigned at (571) 272-3205.

/ALESIA M. BROWN/

Alesia M. Brown
Attorney Advisor
Office of Petitions

UNITED STATES PATENT AND TRADEMARK OFFICE

Commissioner for Patents
United States Patent and Trademark Office
P.O. Box 1450
Alexandria, VA 22313-1450
www.uspto.gov

CARSTENS & CAHOON, LLP
P.O. BOX 802334
DALLAS TX 75380-2334

MAILED

DEC 21 2011

OFFICE OF PETITIONS

In re Application of	:	
Josef F. BILLE	:	
Application No. 13/030,958	:	DECISION ON PETITION
Filed: February 18, 2011	:	TO MAKE SPECIAL UNDER
Attorney Docket No. AAARE.0102DIV1	:	37 CFR 1.102(c)(1)
	:	

This is a decision on the petition under 37 CFR 1.102(c)(1), filed November 18, 2011, to make the above-identified application special based on applicant's age as set forth in M.P.E.P. § 708.02, Section IV.

The petition is **GRANTED**.

A grantable petition to make an application special under 37 CFR 1.102(c)(1) and MPEP § 708.02, Section IV: Applicant's Age must be accompanied by evidence showing that at least one of the applicants is 65 years of age, or more, such as a birth certificate or a statement by applicant. No fee is required

The instant petition includes a declaration statement signed by the applicant. Accordingly, the above-identified application has been accorded "special" status.

Telephone inquiries concerning this decision should be directed to the undersigned at (571) 272-6735.

All other inquiries concerning either the examination or status of the application should be directed to the Technology Center at (571) 272-3700.

The application is being forwarded to Technology Center Art Unit 3774 for action on the merits commensurate with this decision.

/Diane Goodwyn/
Diane Goodwyn
Petitions Examiner
Office of Petitions

UNITED STATES PATENT AND TRADEMARK OFFICE

Commissioner for Patents
United States Patent and Trademark Office
P.O. Box 1450
Alexandria, VA 22313-1450
www.uspto.gov

CARSTENS & CAHOON, LLP
P.O. BOX 802334
DALLAS TX 75380-2334

MAILED

DEC 15 2011

OFFICE OF PETITIONS

In re Application of	:	
Josef F. BILLE	:	
Application No. 13/030,973	:	DECISION ON PETITION
Filed: February 18, 2011	:	TO MAKE SPECIAL UNDER
Attorney Docket No. AAARE.0102DIV2	:	37 CFR 1.102(c)(1)
	:	

This is a decision on the petition under 37 CFR 1.102(c)(1), filed November 18, 2011, to make the above-identified application special based on applicant's age as set forth in M.P.E.P. § 708.02, Section IV.

The petition is **GRANTED**.

A grantable petition to make an application special under 37 CFR 1.102(c)(1) and MPEP § 708.02, Section IV: Applicant's Age must be accompanied by evidence showing that at least one of the applicants is 65 years of age, or more, such as a birth certificate or a statement by applicant. No fee is required

The instant petition includes a declaration statement signed by the applicant. Accordingly, the above-identified application has been accorded "special" status.

Telephone inquiries concerning this decision should be directed to the undersigned at (571) 272-6735.

All other inquiries concerning either the examination or status of the application should be directed to the Technology Center at (571) 272-3700.

The application is being forwarded to Technology Center Art Unit 3774 for action on the merits commensurate with this decision.

/Diane Goodwyn/
Diane Goodwyn
Petitions Examiner
Office of Petitions

UNITED STATES PATENT AND TRADEMARK OFFICE

UNITED STATES DEPARTMENT OF COMMERCE
United States Patent and Trademark Office
Address: COMMISSIONER FOR PATENTS
P.O. Box 1450
Alexandria, Virginia 22313-1450
www.uspto.gov

APPLICATION NO.	FILING DATE	FIRST NAMED INVENTOR	ATTORNEY DOCKET NO.	CONFIRMATION NO.
13/031,000	02/18/2011	Jonathan P. Bucci	064666-0064	3887

33401 7590 04/14/2011
McDermott Will & Emery LLP
600 13th Street, NW
Washington, DC 20005-3096

EXAMINER
TSO, EDWARD H

ART UNIT	PAPER NUMBER
2858	

NOTIFICATION DATE	DELIVERY MODE
04/14/2011	ELECTRONIC

Please find below and/or attached an Office communication concerning this application or proceeding.

The time period for reply, if any, is set in the attached communication.

Notice of the Office communication was sent electronically on above-indicated "Notification Date" to the following e-mail address(es):

mweipdocket@mwe.com
uspto33401@mwe.com

UNITED STATES PATENT AND TRADEMARK OFFICE

Commissioner for Patents
United States Patent and Trademark Office
P.O. Box 1450
Alexandria, VA 22313-1450
www.uspto.gov

McDermott Will & Emery LLP
600 13th Street, NW
Washington DC 20005-3096

In re Application of: Jonathan BUCCI, *et al.* Serial No.: 13/031,000 Filed: February 18, 2011 Title: AUTOMATED SYSTEM FOR DETERMINING WHETHER VEHICLE CHARGE STATION IS PUBLICLY ACCESSIBLE	DECISION ON PETITION TO MAKE SPECIAL FOR NEW APPLICATION UNDER 37 C.F.R. § 1.102 & M.P.E.P. § 708.02

This is a decision on the petition to make the above-identified application special for accelerated examination procedure under 37 C.F.R. § 1.102(d) filed February 18, 2011.

The petition to make the application special is GRANTED.

The application is eligible for accelerated examination and the petition complies with the conditions for granting the application special status pursuant to the "Change to Practice for Petitions in Patent Applications to Make Special and for Accelerated Examination" published June 26, 2006, in the Federal Register. (71 Fed. Reg. 36323).

The prosecution of the instant application will be conducted expeditiously according to the following guidelines.

1. The application will be docketed to an examiner and taken up for action within two weeks of the date of this decision.

2. Restriction Practice:
   If the examiner determines that the claims are not directed to a single invention, a telephone request to elect one single invention will be made pursuant to MPEP 812.01. As a prerequisite to the grant of this petition, the applicant has agreed to make an oral election, by telephone, without traverse. If the applicant refuses to make an election without traverse, or the examiner cannot reach the applicant after a reasonable effort, the examiner will treat the first claimed invention (invention defined by claim 1) as having being constructively elected without traverse for examination.

3. Office action:
   If it is determined that, after appropriate consultation, there is a potential rejection or any other issue to be addressed, the examiner will telephone the applicant and arrange an interview to discuss and resolve the issue. An Office action, other than a Notice of Allowance and Fee(s) Due (Notice of Allowance), will not be issued unless either: 1) an interview was conducted but did not result in agreed to action that places the application in condition for allowance, or, 2) a determination is made that an interview would be unlikely to result in the application being placed in condition for allowance, and 3) an internal conference has been held to review any rejection of any claim.

4. Time for Reply:
   An Office action other than a Notice of Allowance or a final Office action will set a shortened statutory period of one month or thirty days, whichever is longer, for reply with no extension of time available under 37 CFR 1.136(a). Failure to timely file a reply within this non-extendible period for reply will result in the abandonment of the application.

5. Reply by Applicant:
   A timely reply to an Office action other than the Notice of Allowance must be submitted electronically via EFS or EFS-web and limited to addressing the rejections, objections and requirement made. Any amendment that attempts to: 1) add claims which would result in more than three pending independent claims or more than twenty pending total claims; 2) present claims not encompassed by the pre-examination search or an updated accelerated examination support document; or 3) present claims that are directed a non-elected invention or an invention other than that previously claimed and examined in the application, will be treated as not fully responsive and will not be entered.

   For any amendment to the claims (including any new claim) that is not encompassed by the accelerated examination support document, applicant must provide an updated accelerated examination support document that encompasses the amended or new claims at the time of filing of the amendment.

   To proceed expeditiously with the examination, it is recommended that a reply with amendments made to any claim or with any new claim being added be accompanied by an updated accelerated examination support document or a statement explaining how the amended or new claim is supported by the original accelerated examination support document.

6. Information Disclosure Statement (IDS):
   Any IDS filed during prosecution must be submitted electronically via EFS or EFS-web, accompanied by an updated accelerated examination support document, and be in compliance with 37 CFR 1.97 and 1.98.

7. Post-Allowance Processing:
   To expedite processing of the allowed application into a patent, the applicant must: 1) pay the required fees within one month of the date of the Notice of Allowance, and 2) not file any post allowance papers not required by the Office. In no event may the issue fee be paid and accepted later than three months from the date of the Notice of Allowance.

8. After-Final and Appeal Procedures:
   To expedite prosecution, after receiving the final Office action, applicant must: 1) promptly file a notice of appeal, an appeal brief and appeal fees; and 2) not request a pre-appeal brief conference.

   Any amendment, affidavit or other evidence filed after final Office action must comply with applicable rules and the requirements outlined in numbered paragraphs 5 and 6 above.

   On appeal, the application will proceed according to normal appeal procedures. After appeal, the application will again be treated special.

9. Proceedings Outside the Normal Examination Process:
   If the application becomes involved in a proceeding that is outside the normal examination process (e.g., a secrecy order, national security review, interference proceeding, petitions under 37 CFR 1.181, 182 or 183), the application will be treated special before and after such proceeding.

10. Final Disposition:
    The twelve month goal of this accelerated examination procedure ends with a final disposition. The mailing of a final Office action, a Notice of Allowance, the filing of a Notice of Appeal, or the filing of a Request for Continued Examination (RCE) is the final disposition.

If, during prosecution, a paper is not filed electronically using EFS-web, a reply is filed but is not fully responsive, the application is involved in an appeal, or a proceeding outside normal examination process, the application will still be examined expeditiously, however, the final disposition may occur more than twelve months from the filing of the application.

Any inquiry regarding this decision should be directed to Quality Assurance Specialist (QAS) Michael Day at (571) 272-1568.

Michael Day, QAS
Technology Center 2800
Semiconductors, Electrical and Optical
Systems and Components

UNITED STATES PATENT AND TRADEMARK OFFICE

Commissioner for Patents
United States Patent and Trademark Office
P.O. Box 1450
Alexandria, VA 22313-1450
www.uspto.gov

MAILED
FEB 07 2012
OFFICE OF PETITIONS

KNOBBE MARTENS OLSON & BEAR LLP
2040 MAIN STREET
FOURTEENTH FLOOR
IRVINE CA 92614

: DECISION ON REQUEST TO
: PARTICIPATE IN THE PATENT
: PROSECUTION HIGHWAY
: PROGRAM AND PETITION
: TO MAKE SPECIAL UNDER
: 37 CFR 1.102(a)

In re Application of
Hiroshi Shimasaki
Application No.: 13/031,004
Filed: February 18, 2011
Attorney Docket No.: SUTOSH.799AUS
For: Coupler and Electronic Apparatus

This is a decision on the request to participate in the PCT Patent Prosecution Highway (PCT-PPH) pilot program and the petition under 37 CFR 1.102(a), filed on December 15, 2011, to make the above-identified application special.

The request and petition are **GRANTED**.

Discussion

A grantable request to participate in the PCT-PPH pilot program and petition to make special require:

1) The U.S. application must have an eligible relationship to one or more PCT applications where the ISA or IPEA are Australia, Austria, China, EPO, Finland, JPO, Korea, NPI, Russia, Spain, Sweden and the USPTO;

(2) At least one claim in the PCT application has novelty, inventive step, and industrial applicability and must be free of any observations in Box VIII in the latest work product in the international stage or applicant must identify and explain why the claim(s) is/are not subject to the observation in Box VIII;

(3) Applicant must submit a copy of the claim(s) from the PCT application(s) that have novelty, inventive step, and industrial applicability along with an English translation thereof and a statement that the English translation is accurate, if the claims are not in the English language;

(4) All the claims in the U.S. application must sufficiently correspond or be amended to sufficiently correspond to the claim(s) that have novelty, inventive step, and industrial applicability in the PCT application(s);

(5) Examination of the U.S. application has not begun;

(6) Applicant must submit a copy of the latest international work product from the PCT application indicating that the claim(s) have novelty, inventive step, and industrial applicability along with an English translation thereof and a statement that the English translation is accurate if the latest international work product is not in the English language;

(7) Applicant must submit an IDS listing the documents cited by the PCT examiner in the international work product along with copies of documents except U.S. patents or U.S. patent application publications.

The request to participate in the PCT-PPH pilot program and petition comply with the above requirements. Accordingly, the above-identified application has been accorded "special" status.

Telephone inquiries concerning this decision should be directed to Kimberly Inabinet at 571-272-4618.

All other inquiries concerning the examination or status of the application is accessible in the PAIR system at http://www.uspto.gov/ebc.index.html.

This application will be forwarded to the examiner for action on the merits commensurate with this decision.

David Bucci
Petitions Examiner
Office of Petitions

UNITED STATES PATENT AND TRADEMARK OFFICE

Commissioner for Patents
United States Patent and Trademark Office
P.O. Box 1450
Alexandria, VA 22313-1450
www.uspto.gov

KNOBBE MARTENS OLSON & BEAR LLP
2040 MAIN STREET
FOURTEENTH FLOOR
IRVINE CA 92614

MAILED
APR 09 2012
OFFICE OF PETITIONS

In re Application of:
Daisuke Watanabe
Application No. 13/031,024
Filed: February 18, 2011
Attorney Docket No. KATOSH.095AUS

: DECISION ON REQUEST TO
: PARTICIPATE IN THE PATENT
: PROSECUTION HIGHWAY
: PROGRAM AND PETITION
: TO MAKE SPECIAL UNDER
: 37 CFR 1.102(a)

This is a decision on the request to participate in the Patent Prosecution Highway (PPH) program and the petition under 37 CFR 1.102(a), filed February 10, 2012, to make the above-identified application special.

The request and petition are **DISMISSED**.

Discussion

A grantable request to participate in the PPH program and petition to make special require:

1. The U.S. application is

    a. a Paris Convention application which either
        i. validly claims priority under 35 U.S.C. 119(a) and 37 CFR 1.55 to one or more applications filed in the JPO, or
        ii. validly claims priority under 35 U.S.C. 119(a)/365(a) to a PCT application that contains no priority claims,

    or

    b. a national stage application under the PCT (an application which entered the national stage in the U.S. from a PCT international application after compliance with 35 U.S.C. 371), which PCT application
        i. validly claims priority under 35 U.S.C. 365(b) to an application filed in the JPO, or
        ii. validly claims priority under 35 U.S.C. 365(b) to a PCT application that contains no priority claims, or
        iii. contains no priority claim,

    or

    c. a so-called bypass application filed under 35 U.S.C. 111(a) which validly claims benefit under 35 U.S.C. 120 to a PCT application, which PCT application

i. validly claims priority under 35 U.S.C. 365(b) to an application filed in the JPO, or
ii. validly claims priority under 35 U.S.C. 365(b) to a PCT application that contains no priority claims, or
iii. contains no priority claim;

2. Applicant must submit a copy of:
   a. The allowable/patentable claim(s) from the JP application(s);
   b. An English translation of the allowable/patentable claim(s), and
   c. A statement that the English translation is accurate (if the claims were published in a language other than English);
3. Applicant must:
   a. Ensure that all the claims in the U.S. application must sufficiently correspond or be amended to sufficiently correspond to the allowable/patentable claim(s) in the JP application(s), and
   b. Submit a claims correspondence table in English;
4. Examination of the U.S. application has not begun;
5. Applicant must submit:
   a. A copy of all the office actions (which are relevant to patentability), excluding "Decision to Grant a Patent" from each of the JP application(s) containing the allowable/patentable claim(s);
   b. An English language translation of the JPO office action; and
   c. A statement that the English translation is accurate (if the office actions are not in the English language);
6. Applicant must submit:
   a. An IDS listing the documents cited by the JPO examiner in the JPO office action (unless already filed in this application); and
   b. Copies of all the documents cited in the JPO office action, except U.S. patents or U.S. patent application publications (unless already filed in this application);

This request to participate in the PPH program and petition is assessed as follows:

Conditions (1-2) and (4-6) above are considered to have been met. However, the request to participate in the PPH pilot program and petition does not appear to meet condition (3).

Regarding the requirement of condition (3), applicant has failed to ensure that all the claims in the U.S. application (currently amended claims filed February 10, 2012) sufficiently correspond to the allowable/patentable claims in the JPO application. Petitioner asserts on the Claims Correspondence Table that "US Claim 1 sufficiently corresponds to JPO allowed Claim 1". However, US claim 1 requires "a recording medium;", while JP claim 1 requires "a recording medium for recording date;". Additionally, US claim 1 requires "a head comprising a reader for reading data and a writer for writing date, and configured to float over the recording medium, wherein the recording medium is configured to be driven and rotated by the driving module;" while JPO claim requires "a head comprising a reader for reading data from the recording medium and a writer for writing data to the recording medium, and configured to float over the recording medium, wherein the recording medium is configured to be driven and rotated by the driving module;". Further, petitioner asserts that "US claim 7 sufficiently corresponds to JPO allowed claim 6". However, US claim 7 requires "the method comprising" while JPO claim 6 requires "the method executed by the controller and comprising". Additionally, US claim 7 requires "controlling the projection amount of the head by adding a value corresponding to the check by the write-verify module to an electrical current in a steady state that passing through the conductor" while JPO claim 6 requires "controlling the projection amount of the head by adding a value corresponding to the check by the write-verify module to a reference value corresponding to an electrical current in a steady state that passing through the conductor". The scope of these claims is different. It is applicant's responsibility to ensure that all claims in the US application correspond to the allowed/patentable JPO claims.

Applicant is given **ONE** opportunity within a time period of **ONE MONTH or THIRTY DAYS**, whichever is longer, from the mailing date of this decision to correct the deficiencies. **NO EXTENSION OF TIME UNDER 37 CFR 1.136 IS PERMITTED.** If the deficiencies are

not corrected with the time period given, the application will await action in its regular turn. Response must be filed via the Electronic Filing System (EFS) using the document description: Petition to make special under Patent Pros Hwy. Any preliminary amendments and IDS submitted with the PPH documents must be separately indexed as a preliminary amendment and IDS, respectively.

Telephone inquiries concerning this decision should be directed to Petitions Examiner Joan Olszewski at 571-272-7751.

All other inquiries concerning the examination or status of the application is accessible in the PAIR system at http://www.uspto.gov/ebc/index.html.

/dab/
David Bucci
Petitions Examiner
Office of Petitions

UNITED STATES PATENT AND TRADEMARK OFFICE

Commissioner for Patents
United States Patent and Trademark Office
P.O. Box 1450
Alexandria, VA 22313-1450
www.uspto.gov

SEAN D BURDICK PE
21372 AVENIDA MANANTIAL
LAKE FOREST CA 92630

MAILED
APR 25 2011
OFFICE OF PETITIONS

In re Application of	:	
Woiken, et al.	:	
Application No. 13/031,124	:	DECISION REFUSING STATUS
Filed: February 18, 2011	:	UNDER 37 CFR 1.47(a)
Attorney Docket No. FTP-03-NP	:	

This is in response to the petition under 37 CFR 1.47, filed March 31, 2011, which is treated as a petition under 37 CFR 1.47(a).

The petition under 37 CFR 1.47(a) is **DISMISSED**.

Rule 47 applicant is given TWO MONTHS from the mailing date of this decision to reply, correcting the below-noted deficiencies. Any reply should be entitled "Request for Reconsideration of Petition Under 37 CFR 1.47(a)," and should only address the deficiencies noted below, except that the reply may include an oath or declaration executed by the non-signing inventor. **Failure to respond will result in abandonment of the application.** Any extensions of time will be governed by 37 CFR 1.136(a).

A grantable petition under 37 CFR 1.47(a) requires: (1) proof that the non-signing inventor (or legal representative) cannot be reached after diligent effort or refuses to sign the oath or declaration after having been presented with the application papers (specification, claims, drawings, oath or declaration);

(2) an acceptable oath or declaration in compliance with 37 CFR 1.63; (3) the petition fee; and (4) a statement of the last known address of the non-signing inventor.

Rule 47 applicant has not met requirement (2) above. The 37 CFR 1.63 declaration is not acceptable as filed because it is not of sufficient quality to render it legible.

On renewed petition, applicant must submit a new copy of the 37 CFR 1.63 declaration.

Receipt of the $200 fee for filing the instant petition is acknowledged. No additional fee is due on renewed petition.

Further correspondence with respect to this matter should be addressed as follows:

By mail: Mail Stop Petitions
Commissioner for Patents
P.O. Box 1450
Alexandria VA 22313-1450

By FAX: (571)273-8300
Attn: Office of Petitions

Telephone inquiries related to this decision may be directed to the undersigned at (571)272-3207.

Cliff Congo
Petitions Attorney
Office of Petitions

UNITED STATES PATENT AND TRADEMARK OFFICE

Commissioner for Patents
United States Patent and Trademark Office
P.O. Box 1450
Alexandria, VA 22313-1450
www.uspto.gov

SEAN D BURDICK PE
21372 AVENIDA MANANTIAL
LAKE FOREST CA 92630

MAILED
MAY 13 2011
OFFICE OF PETITIONS

In re Application of	:	
Woiken, et al.	:	
Application No. 13/031,124	:	DECISION ACCORDING STATUS
Filed: February 18, 2011	:	UNDER 37 CFR 1.47(a)
Attorney Docket No. FTP-03-NP	:	

This is in response to the renewed petition under 37 CFR 1.47(a), filed May 4, 2011.

The petition under 37 CFR 1.47(a) is **GRANTED**.

Applicants previously filed a petition under 37 CFR 1.47(a) on March 31, 2011. However, the petition was dismissed in a decision mailed on April 25, 2011. The petition was dismissed because the 37 CFR 1.63 declaration was not acceptable, as it was not of sufficient quality to render it legible.

With the instant renewed petition, Applicants have submitted a legible 37 CFR 1.63 declaration.

The petition and declaration have been reviewed and determined to be in compliance with 37 CFR 1.47(a).

The application is hereby accorded Rule 47 status.

As provided in 37 CFR 1.47(c), the Office will provide notice of this application's filing to the non-signing inventor at the last known address provided in the petition. Notice will also be provided in the Official Gazette.

The application is being forwarded to the Office of Patent Application Processing for pre-examination processing.

Telephone inquiries related to this decision may be directed to the undersigned at (571)272-3207.

Cliff Congo
Petitions Attorney
Office of Petitions

UNITED STATES PATENT AND TRADEMARK OFFICE

Commissioner for Patents
United States Patent and Trademark Office
P.O. Box 1450
Alexandria, VA 22313-1450
www.uspto.gov

MATTHEW JOHN JAGGERS
3523 WILBUR ST
RIVERSIDE CA 92503

MAILED
MAY 13 2011
OFFICE OF PETITIONS

In re Application of :
Woiken, et al. :
Application No. 13/031,124 :
Filed: February 18, 2011 : LETTER
Title: In-line Treble-Port Venturi Connector with Supplemental Inlet Port and Low Flow Baffle

Dear Mr. Jaggers:

You are named as a joint inventor in the above-identified United States patent application filed under the provisions of 35 USC 116 (United States Code) and 37 CFR 1.47(a), Rules of Practice in Patent Cases. Should a patent be granted on the application you will be designated therein as joint inventor.

As a named inventor you are entitled to inspect any paper in the file wrapper of the application, order copies of all or any part thereof (at a prepaid cost per 37 CFR 1.19) or make your position of record in the application. Alternatively, you may arrange to do any of the preceding through a registered patent attorney or agent presenting written authorization from you. If you care to join the application, agent of record would presumably assist you. Joining in the application would entail the filing of an appropriate oath or declaration by you pursuant to 37 CFR 1.63.

Telephone inquiries regarding this communication should be directed to Petitions Attorney Cliff Congo at (571)272-3207. Requests for information regarding your application should be directed to the File Information Unit at (703) 308-2733. Information regarding how to pay for and order a copy of the application, or a specific paper in the application, should be directed to the Certification Division at (703) 308-9726 or 1-800-972-6382 (outside the Washington D.C. area).

Cliff Congo
Petitions Attorney
Office of Petitions

UNITED STATES PATENT AND TRADEMARK OFFICE

Commissioner for Patents
United States Patent and Trademark Office
P.O. Box 1450
Alexandria, VA 22313-1450
www.uspto.gov

Hazen Patent Group, LLC
1534 W. Islandia Dr.
Gillbert AZ 85233

MAILED
MAY 1 8 2011
OFFICE OF PETITIONS

In re Application of	:	
Merton W. Pekrul	:	
Application No. 13/031,190	:	DECISION ON PETITION
Filed: February 19, 2011	:	TO MAKE SPECIAL UNDER
Attorney Docket No. MERT0005	:	37 CFR 1.102(c)(1)
	:	

This is a decision on the petition under 37 CFR 1.102(c)(1), filed April 5, 2011, to make the above-identified application special based on applicant's age as set forth in M.P.E.P. § 708.02, Section IV.

The petition is **GRANTED**.

A grantable petition to make an application special under 37 CFR 1.102(c)(1) and MPEP § 708.02, Section IV: Applicant's Age must be accompanied by evidence showing that at least one of the applicants is 65 years of age, or more, such as a birth certificate or a statement by applicant. No fee is required

The instant petition includes a statement from the attorney of record declaring that he/she is in possession of such evidence that shows the applicant is 65 years of age or older. Accordingly, the above-identified application has been accorded "special" status.

Telephone inquiries concerning this decision should be directed to Terri Johnson at 571-272-2991.

All other inquiries concerning either the examination or status of the application should be directed to the Technology Center.

The application is being forwarded to the Technology Center Art Unit 3748 for action on the merits commensurate with this decision.

/Terri Johnson/
Terri Johnson
Petitions Examiner
Office of Petitions

UNITED STATES PATENT AND TRADEMARK OFFICE

Commissioner for Patents
United States Patent and Trademark Office
P.O. Box 1450
Alexandria, VA 22313-1450
www.uspto.gov

MARTIN D. MOYNIHAN d/b/a PRTSI, INC.
P.O. BOX 16446
ARLINGTON VA 22215

MAILED
MAR 08 2012
OFFICE OF PETITIONS

In re Application of	:	
Bahir et al.	:	
Application No. 13/031,293	:	ON PETITION
Filed: 02/21/2011	:	
Attorney Docket No. 50748	:	

This is in response to the PETITION TO ACCEPT COLOR DRAWINGS/PHOTOGRAPHS, filed in the United States Patent and Trademark Office (USPTO) on February 21, 2011, which is treated as a petition under 37 C.F.R. § 1.84(a)(2)

The petition is **DISMISSED**.

Any request for reconsideration of this decision must be submitted within **TWO (2) MONTHS** from the mail date of this decision. Extensions of time under 37 CFR 1.136(a) are permitted. The reconsideration request should include a cover letter entitled, "Renewed Petition under 37 CFR 1.84(a)(2)". No further petition fee is required for a renewed petition.

37 CFR 1.84(a)(2) states that the Office will accept color drawings only after granting a petition explaining why color drawings are necessary. The petition must include:

(i) The fee set forth in 1.17(h);

(ii) Three (3) sets of color drawings;[1]

(iii) An amendment to the specification to insert (unless the specification contains or has been previously amended to contain) the following language as the first paragraph of the brief description of the drawings:

The patent or application file contains at least one drawing executed in color. Copies of this patent or patent application publication with color drawing(s) will be provided by the Office upon request and payment of the necessary fee.

[1] The requirement for three (3) sets of color drawings is not applicable to color drawings submitted via EFS-Web. Therefore, only one set of color drawings is necessary when filing via EFS-Web. See MPEP 502.05(VIII)(C).

A review of Office files reveals that no color drawings have been submitted.

In addition, MPEP 608.02 states that a petition to accept color drawings will only be granted where the Office "has determined that a color drawings or photograph is the only practical medium by which to disclose in a printed utility patent the subject matter to be patented."

Petitioners assert that the necessity for the Color Drawings is to distinguish the different lines.

Petitioner's argument has been considered, but is not persuasive. The Office has determined that color drawings or photographs are not the only practical medium by which to disclose in a printed utility patent the subject matter to be patented. As such, color drawings or photographs are not necessary for an understanding of the invention sought to be patented. The petition is therefore dismissed.

Further correspondence with respect to this matter should be addressed as follows:

By mail: Mail Stop Petitions
Commissioner for Patents
PO Box 1450
Alexandria VA 22313-1450

By FAX: 571-273-8300
Attn: Office of Petitions

A reply may also be filed via EFS-Web.

The application is being forwarded to Group Art Unit 2878.

Telephone inquiries regarding this decision should be directed to Senior Petitions Attorney Douglas I. Wood at (571)272-3231.

Jose' G. Dees
Petitions Examiner
Office of Petitions

UNITED STATES PATENT AND TRADEMARK OFFICE

Commissioner for Patents
United States Patent and Trademark Office
P.O. Box 1450
Alexandria, VA 22313-1450
www.uspto.gov

LAW OFFICES OF BRIAN S STEINBERGER
101 BREVARD AVENUE
COCOA FL 32922

MAILED
NOV 08 2011
OFFICE OF PETITIONS

In re Application of	:	
Battaglini et al.	:	
Application No. 13/031,296	:	DECISION ON PETITION
Filed: February 21, 2011	:	TO MAKE SPECIAL UNDER
Attorney Docket No. PC-1053CIP.DIV.C	:	37 CFR 1.102(c)(1)
	:	

This is a decision on the petition under 37 CFR 1.102(c)(1), filed October 27, 2011, to make the above-identified application special based on applicant's age as set forth in M.P.E.P. § 708.02, Section IV.

The petition is **GRANTED**.

A grantable petition to make an application special under 37 CFR 1.102(c)(1) and MPEP § 708.02, Section IV: Applicant's Age must be accompanied by evidence showing that at least one of the applicants is 65 years of age, or more, such as a birth certificate or a statement by applicant. No fee is required

The instant petition includes a statement from Michael D. Battaglini's attorney. Accordingly, the above-identified application has been accorded "special" status.

Telephone inquiries concerning this decision should be directed to the undersigned at 571-272-3206.

All other inquiries concerning either the examination or status of the application should be directed to the Technology Center.

The application is being forwarded to the Technology Center Art Unit 3684 for action on the merits commensurate with this decision.

/Liana Walsh/
Liana Walsh
Petitions Examiner
Office of Petitions

UNITED STATES PATENT AND TRADEMARK OFFICE

Commissioner for Patents
United States Patent and Trademark Office
P.O. Box 1450
Alexandria, VA 22313-1450
www.uspto.gov

MAILED

FEB 13 2012

OFFICE OF PETITIONS

MARTIN D. MOYNIHAN d/b/a PRTSI, INC.
P.O. BOX 16446
ARLINGTON VA 22215

In re Application of	:	
Bahir et al.	:	
Application No. 13/031,302	:	ON PETITION
Filed: 02/21/2011	:	
Attorney Docket No. 50750	:	

This is in response to the PETITION TO ACCEPT COLOR DRAWINGS/PHOTOGRAPHS, filed in the United States Patent and Trademark Office (USPTO) on February 21, 2011, which is treated as a petition under 37 CFR 1.84(a)(2).

The petition is **DISMISSED**.

Any request for reconsideration of this decision must be submitted within **TWO (2) MONTHS** from the mail date of this decision. Extensions of time under 37 CFR 1.136(a) are permitted. The reconsideration request should include a cover letter entitled, "Renewed Petition under 37 CFR 1.84(a)(2)". No further petition fee is required for a renewed petition.

37 CFR 1.84(a)(2) states that the Office will accept color drawings only after granting a petition explaining why color drawings are necessary. The petition must include:

(i) The fee set forth in 1.17(h);

(ii) Three (3) sets of color drawings;[1]

(iii) An amendment to the specification to insert (unless the specification contains or has been previously amended to contain) the following language as the first paragraph of the brief description of the drawings:

The patent or application file contains at least one drawing executed in color. Copies of this patent or patent application publication with color drawing(s) will be provided by the Office upon request and payment of the necessary fee.

[1] The requirement for three (3) sets of color drawings is not applicable to color drawings submitted via EFS-Web. Therefore, only one set of color drawings is necessary when filing via EFS-Web. See MPEP 502.05(VIII)(C).

In addition, MPEP 608.02 states that a petition to accept color drawings will only be granted where the Office "has determined that a color drawings or photograph is the only practical medium by which to disclose in a printed utility patent the subject matter to be patented."

Petitioners assert that the necessity for the Color Drawings is to distinguish the different lines.

A review of Office files reveals that no color drawings have been submitted.

Furthermore, the Office has determined that color drawings or photographs are not the only practical medium by which to disclose in a printed utility patent the subject matter to be patented.

As such, color drawings or photographs are not necessary for an understanding of the invention sought to be patented. The petition is therefore dismissed.

Further correspondence with respect to this matter should be addressed as follows:

By mail: Mail Stop Petitions
Commissioner for Patents
PO Box 1450
Alexandria VA 22313-1450

By FAX: 571-273-8300
Attn: Office of Petitions

A reply may also be filed via EFS-Web.

The application is being forwarded to Group Art Unit 2821.

Telephone inquiries regarding this decision should be directed to the undersigned at (571)272-3231.

D Wood

Douglas I. Wood
Senior Petitions Attorney
Office of Petitions

UNITED STATES PATENT AND TRADEMARK OFFICE

Commissioner for Patents
United States Patent and Trademark Office
P.O. Box 1450
Alexandria, VA 22313-1450
www.uspto.gov

In re Application of
FARUK DIZDAREVIC

Application No. 13031421

Filed:

Attorney Docket No.

:DECISION ON PETITION TO MAKE SPECIAL
:UNDER 37 CFR 1.102(c)(1)

This is a decision on the electronic petition under 37 CFR 1.102 (c)(1), filed 21-FEB-2011 to make the above-identified application special based on applicant's age as set forth in MPEP § 708.02, Section IV.

The petition is **GRANTED**.

A grantable petition to make an application special under 37 CFR 1.102(c)(1), MPEP § 708.02, Section IV: Applicant's Age must include a statement by applicant or a registered practitioner having evidence that applicant is at least 65 years of age. No fee is required.

Accordingly, the above-identified application has been accorded "special" status and will be taken up for action by the examiner upon the completion of all pre-examination processing.

Telephone inquiries concerning this electronic decision should be directed to the Electronic Business Center at 866-217-9197.

All other inquiries concerning either the examination or status of the application should be directed to the Technology Center.

UNITED STATES PATENT AND TRADEMARK OFFICE

Commissioner for Patents
United States Patent and Trademark Office
P.O. Box 1450
Alexandria, VA 22313-1450
www.uspto.gov

CHRISTOPHER PARADIES, PH.D.
FOWLER WHITE BOGGS P.A.
501 E KENNEDY BLVD, STE. 1700
TAMPA FL 33602

MAILED
JUL 07 2011
OFFICE OF PETITIONS

In re Application of:	:	
Lee et al.	:	DECISION DISMISSING
Application No.: 13/031588	:	PETITION UNDER
Filing or 371(c) Date: 02/21/2011	:	37 CFR 1.47(a)
Title of Invention:	:	
PROCESS FOR SYNTHESIZING SILVER-	:	
SILICA PARTICLES AND APPLICATIONS	:	

This Decision is in response to the "Petition Pursuant to 37 CFR § 1.47(a)," filed May 16, 2011, to allow the other inventor(s) to proceed with the application on behalf of himself or herself and the nonsigning inventor(s).

The petition is **dismissed**.

Rule 47 applicant is given TWO (2) MONTHS from the mailing date of this decision to reply, correcting the below-noted deficiencies. Any reply should be entitled "Request for Reconsideration of Petition Under [insert the applicable code section]"; should only address the deficiencies noted below, except that the reply may include an oath or declaration executed by the non-signing inventor. Failure to respond will result in abandonment of the application. Any extensions of time will be governed by 37 CFR 1.136(a).

Background

The above-identified application was filed on February 21, 2011, without, a fully executed oath or declaration. The Office mailed a Notice to File Missing Parts of Nonprovisional Application, on March 15, 2011, requiring *inter alia*, a properly signed oath or declaration.

The present petition

Applicant files the present petition and an oath or declaration executed by inventor Christopher Paradoes. Applicant provides that there are four nonsigning inventors. Of the four nonsigning inventors, two of the nonsigning inventors are un-locatable, and two of the nonsigning inventors have not responded to email sent to their last known email addresses.

Applicable Law, Rules and MPEP

A grantable petition under 37 CFR 1.47(a) requires: (1) proof that the non-signing inventor cannot be reached or refuses to sign the oath or declaration after having been presented with the application papers (specification, claims and drawings); (2) an acceptable oath or declaration in compliance with 35 U.S.C. §§ 115 and 116; (3) the petition fee; and (4) a statement of the last known address of the non-signing inventor. Applicant lacks item (1) set forth above.

As to item (1), Applicant is advised that 37 CFR 1.47(a) provides for two separate and distinct instances that will allow the other inventor(s) to proceed with the application on behalf of himself or herself and the nonsigning inventor(s). 37 CFR 1.47(a) requires proof that either the non-signing inventor cannot be found or reached mafter diligent effort, or refuses to sign the oath or declaration after having been presented with the application papers (specification, claims and drawings).

If the nonsigning inventor cannot be found or reached after diligent effort, the MPEP provides:

> Where inability to find or reach a nonsigning inventor "after diligent effort" is the reason for filing under 37 CFR 1.47, a statement of facts should be submitted that fully describes the exact facts which are relied on to establish that a diligent effort was made. The fact that a nonsigning inventor is on vacation or out of town and is therefore temporarily unavailable to sign the declaration is not an acceptable reason for filing under 37 CFR 1.47. Furthermore, the fact that an inventor is hospitalized and/or is not conscious is not an acceptable reason for filing under 37 CFR 1.47. 37 CFR 1.43 may be available under these circumstances. See MPEP § 409.02. Such a petition under 37 CFR 1.47 will be dismissed as inappropriate. The statement of facts must be signed, where at all possible, by a person having firsthand knowledge of the facts recited therein. Statements based on hearsay will not normally be accepted. Copies of documentary evidence such as internet searches, certified mail return receipts, cover letters of instructions, telegrams, that support a finding that the nonsigning inventor could not be found or reached should be made part of the statement. The steps taken to locate the whereabouts of the nonsigning inventor should be included in the statement of facts. It is important that the statement contain facts as opposed to conclusions. (Emphasis added).

At the very least, an Internet search, or a search of telephone directories should be undertaken of the regions where it is suspected the non-signing inventor may reside. Copies of the results of such searches must be referred to in any renewed petition. It is important that the forthcoming communication contain statements of fact as opposed to conclusions. *See*, MPEP § 409.03(d).

Where it is alleged that the nonsigning inventor refuses to join in the application, the MPEP provides

> A refusal by an inventor to sign an oath or declaration when the inventor has not been presented with the application papers does not itself suggest that the inventor

> is refusing to join the application unless it is clear that the inventor understands exactly what he or she is being asked to sign and refuses to accept the application papers. A copy of the application papers should be sent to the last known address of the non-signing inventor, or, if the nonsigning inventor is represented by counsel, to the address of the nonsigning inventor's attorney. The fact that an application may contain proprietary information does not relieve the 37 CFR 1.47 applicant of the responsibility to present the application papers to the inventor if the inventor is willing to receive the papers in order to sign the oath or declaration.

MPEP 409.03(d).

In this instance, Applicant asserts that inventors Young-Doo Jun and Jong-Min Lee are unlocatable, but also that a copy of the application papers were sent to their last known addresses.

Applicant should clarify whether the whereabouts of inventors Jun and Lee are known; whether to Applicant's knowledge the last known address for inventors Jun and Lee are current, in which case sending a copy of the application to their addresses without a response amounts to a constructive reusal to join in the application and thus satisfies the rule, or whether the inventors are in fact un-locatable, which requires a showing of diligent effort in trying to find or reach the nonsigning inventors as iterated *supra*.

As to inventor Seong-Guen Oh, Applicant is advised that receipt of an email transmission must demonstrated by Applicant before a petition may be granted. While receipt of an email may be confirmed by the sender, receipt of an email attachment (i.e. a copy of the application), may not be confirmed by the sender. Applicant is advised to mail the application (specification, claims and drawings), to the last known address of the inventor. That address should be the last known address at which the inventor customarily receives mail. See MPEP § 605.03. Ordinarily, the last known address will be the last known residence of the nonsigning inventor.

As to inventor Dae-Wook Kim, Applicant provides that an email was sent to inventor Seong-Guen Oh, which was the last known contact information for Dae Wook Kim. Similar to inventor Oh, absent a reply from inventor Kim indicating receipt of the application, Applicant is advised to mail the application (specification, claims and drawings), to the last known address of inventor Kim. Again, that address should be the last known address at which the inventor customarily receives mail. See MPEP § 605.03. Ordinarily, the last known address will be the last known residence of the nonsigning inventor. Alternatively, Applicant must demonstrate that Kim cannot be found or reached after diligent effort.

Conclusion

The petition is dismissed without prejudice. Applicant should file a request for reconsideration of the petition decision and include the necessary statements and/or showings as iterated supra.

Further correspondence with respect to this matter should be addressed as follows:

By mail:	Director for Patents PO Box 1450 Alexandria, VA 22313-1450
By FAX:	(571) 273-8300 Attn: Office of Petitions
By hand:	Customer Service Window Randolph Building 401 Dulany Street Alexandria, VA 22314

Telephone inquiries concerning this matter should be directed to the undersigned at (571) 272-3232.

/DLW/

Derek L. Woods
Attorney
Office of Petitions

UNITED STATES PATENT AND TRADEMARK OFFICE

Commissioner for Patents
United States Patent and Trademark Office
P.O. Box 1450
Alexandria, VA 22313-1450
www.uspto.gov

CHRISTOPHER PARADIES, PH.D.
FOWLER WHITE BOGGS P.A.
501 E KENNEDY BLVD, STE. 1700
TAMPA FL 33602

MAILED

SEP 15 2011

OFFICE OF PETITIONS

In re Application of:	:	DECISION GRANTING
Lee et al.	:	PETITION UNDER
Application No.: 13/031588	:	37 CFR 1.47(a)
Filing or 371(c) Date: 02/21/2011	:	
Title of Invention:	:	
PROCESS FOR SYNTHESIZING SILVER-	:	
SILICA PARTICLES AND APPLICATIONS	:	

This Decision is in response to the "Request for Reconsideration of Petition Under 37 CFR § 1.47(a)," filed September 7, 2011, to allow the other inventor(s) to proceed with the application on behalf of himself or herself and the nonsigning inventor(s).

The petition is granted.

The above-identified application and papers have been reviewed and found in compliance with 37 CFR 1.47(a). This application is hereby accorded Rule 1.47(a) status.

Petitioner has shown that the non-signing inventors, Dae-Wook Kim, Seong-Guen Oh, Young-Do Jun and Jong-Min Lee, refuse to join in the application or cannot be found or reached after diligent effort.

As provided in Rule 1.47(a), this Office will forward notice of this application's filing to the non-signing inventor at the addresses given in the Petition. Notice of the filing of this application will also be published in the Official Gazette.

The application file is being referred to the Office of Patent Application Processing for continued processing in the normal course of business.

Telephone inquiries related to this decision may be directed to the undersigned at (571) 272-3232.

/DLW/

Derek L. Woods
Attorney
Office of Petitions

UNITED STATES PATENT AND TRADEMARK OFFICE

Commissioner for Patents
United States Patent and Trademark Office
P.O. Box 1450
Alexandria, VA 22313-1450
www.uspto.gov

MR. YOUNG-DOO JUN
ITEP (KOREA INSTITUTE OF INDUSTRIAL
TECHNOLOGY EVALUATION AND PLANNING)
8-13F KOTECH BLDG. 503
TEHERAN-RO, GANGNAM-GU
SEOUL 135-080
KOREA

MAILED
SEP 15 2011
OFFICE OF PETITIONS

In re Application of:
Lee et al.
Application No.: 13/031588
Filing or 371(c) Date: 02/21/2011
Title of Invention:
PROCESS FOR SYNTHESIZING SILVER-SILICA PARTICLES AND APPLICATIONS

LETTER

Dear Mr. Jun:

You are named as a joint inventor in the above-identified United States patent application filed under the provisions of 35 U.S.C. 116 (United States Code) and 37 CFR 1.47(a), Rules of Practice in Patent Cases. Should a patent be granted on the application you will be designated therein as a joint inventor.

As a named inventor you are entitled to inspect any paper in the file wrapper of the application, order copies of all or any part thereof (at a prepaid cost per 37 CFR 1.19) or make your position of record in the application. Alternatively, you may arrange to do any of the preceding through a registered patent attorney or agent presenting written authorization from you. If you care to join the application, counsel of record (see below) would presumably assist you. Joining in the application would entail the filing of an appropriate oath or declaration by you pursuant to 37 CFR 1.63.

Telephone inquiries regarding this communication should be directed to the undersigned at (571) 272-3232. Requests for information regarding your application should be directed to the File Information Unit at (703) 308-2733. Information regarding how to pay for and order a copy of the application, or a specific paper in the application, should be directed to Certification Division at (703) 308-9726 or 1-800-972-6382 (outside the Washington D.C. area).

/DLW/

Derek L. Woods
Attorney
Office of Petitions

CC: CHRISTOPHER PARADIES, PH.D.
FOWLER WHITE BOGGS P.A.
501 E KENNEDY BLVD, STE. 1700
TAMPA FL 33602

UNITED STATES PATENT AND TRADEMARK OFFICE

Commissioner for Patents
United States Patent and Trademark Office
P.O. Box 1450
Alexandria, VA 22313-1450
www.uspto.gov

MR. JONG-MIN LEE
301-102, KUM HWA APT
SANGGAI-YONGIN SI GIHEUNG-GU
GYEONGGI-DO
KOREA

MAILED
SEP 15 2011
OFFICE OF PETITIONS

In re Application of:	:	
Lee et al.	:	LETTER
Application No.: 13/031588	:	
Filing or 371(c) Date: 02/21/2011	:	
Title of Invention:	:	
PROCESS FOR SYNTHESIZING SILVER-	:	
SILICA PARTICLES AND APPLICATIONS	:	

Dear Mr. Lee:

You are named as a joint inventor in the above-identified United States patent application filed under the provisions of 35 U.S.C. 116 (United States Code) and 37 CFR 1.47(a), Rules of Practice in Patent Cases. Should a patent be granted on the application you will be designated therein as a joint inventor.

As a named inventor you are entitled to inspect any paper in the file wrapper of the application, order copies of all or any part thereof (at a prepaid cost per 37 CFR 1.19) or make your position of record in the application. Alternatively, you may arrange to do any of the preceding through a registered patent attorney or agent presenting written authorization from you. If you care to join the application, counsel of record (see below) would presumably assist you. Joining in the application would entail the filing of an appropriate oath or declaration by you pursuant to 37 CFR 1.63.

Telephone inquiries regarding this communication should be directed to the undersigned at (571) 272-3232. Requests for information regarding your application should be directed to the File Information Unit at (703) 308-2733. Information regarding how to pay for and order a copy of the application, or a specific paper in the application, should be directed to Certification Division at (703) 308-9726 or 1-800-972-6382 (outside the Washington D.C. area).

/DLW/

Derek L. Woods
Attorney
Office of Petitions

CC: CHRISTOPHER PARADIES, PH.D.
FOWLER WHITE BOGGS P.A.
501 E KENNEDY BLVD, STE. 1700
TAMPA FL 33602

UNITED STATES PATENT AND TRADEMARK OFFICE

Commissioner for Patents
United States Patent and Trademark Office
P.O. Box 1450
Alexandria, VA 22313-1450
www.uspto.gov

DR. DAE-WOOK KIM
C/O DR. SEONG-GUEN OH
NANO BIO CO., LTD
14-216, 17 HAENGDANG-DONG
SEONGDONG-GU
SEOUL, 133791
KOREA

MAILED

SEP 15 2011

OFFICE OF PETITIONS

In re Application of:	:	
Lee et al.	:	LETTER
Application No.: 13/031588	:	
Filing or 371(c) Date: 02/21/2011	:	
Title of Invention:	:	
PROCESS FOR SYNTHESIZING SILVER-	:	
SILICA PARTICLES AND APPLICATIONS	:	

Dear Dr. Kim:

You are named as a joint inventor in the above-identified United States patent application filed under the provisions of 35 U.S.C. 116 (United States Code) and 37 CFR 1.47(a), Rules of Practice in Patent Cases. Should a patent be granted on the application you will be designated therein as a joint inventor.

As a named inventor you are entitled to inspect any paper in the file wrapper of the application, order copies of all or any part thereof (at a prepaid cost per 37 CFR 1.19) or make your position of record in the application. Alternatively, you may arrange to do any of the preceding through a registered patent attorney or agent presenting written authorization from you. If you care to join the application, counsel of record (see below) would presumably assist you. Joining in the application would entail the filing of an appropriate oath or declaration by you pursuant to 37 CFR 1.63.

Telephone inquiries regarding this communication should be directed to the undersigned at (571) 272-3232. Requests for information regarding your application should be directed to the File Information Unit at (703) 308-2733. Information regarding how to pay for and order a copy of the application, or a specific paper in the application, should be directed to Certification Division at (703) 308-9726 or 1-800-972-6382 (outside the Washington D.C. area).

/DLW/

Derek L. Woods
Attorney
Office of Petitions

CC: CHRISTOPHER PARADIES, PH.D.
FOWLER WHITE BOGGS P.A.
501 E KENNEDY BLVD, STE. 1700
TAMPA FL 33602

UNITED STATES PATENT AND TRADEMARK OFFICE

Commissioner for Patents
United States Patent and Trademark Office
P.O. Box 1450
Alexandria, VA 22313-1450
www.uspto.gov

DR. SEONG-GUEN OH
NANO BIO CO., LTD
14-216, 17 HAENGDANG-DONG
SEONGDONG-GU
SEOUL, 133791
KOREA

MAILED
SEP 15 2011
OFFICE OF PETITIONS

In re Application of:	:	
Lee et al.	:	LETTER
Application No.: 13/031588	:	
Filing or 371(c) Date: 02/21/2011	:	
Title of Invention:	:	
PROCESS FOR SYNTHESIZING SILVER-	:	
SILICA PARTICLES AND APPLICATIONS	:	

Dear Dr. Oh:

You are named as a joint inventor in the above-identified United States patent application filed under the provisions of 35 U.S.C. 116 (United States Code) and 37 CFR 1.47(a), Rules of Practice in Patent Cases. Should a patent be granted on the application you will be designated therein as a joint inventor.

As a named inventor you are entitled to inspect any paper in the file wrapper of the application, order copies of all or any part thereof (at a prepaid cost per 37 CFR 1.19) or make your position of record in the application. Alternatively, you may arrange to do any of the preceding through a registered patent attorney or agent presenting written authorization from you. If you care to join the application, counsel of record (see below) would presumably assist you. Joining in the application would entail the filing of an appropriate oath or declaration by you pursuant to 37 CFR 1.63.

Telephone inquiries regarding this communication should be directed to the undersigned at (571) 272-3232. Requests for information regarding your application should be directed to the File Information Unit at (703) 308-2733. Information regarding how to pay for and order a copy of the application, or a specific paper in the application, should be directed to Certification Division at (703) 308-9726 or 1-800-972-6382 (outside the Washington D.C. area).

/DLW/

Derek L. Woods
Attorney
Office of Petitions

CC: CHRISTOPHER PARADIES, PH.D.
FOWLER WHITE BOGGS P.A.
501 E KENNEDY BLVD, STE. 1700
TAMPA FL 33602

UNITED STATES PATENT AND TRADEMARK OFFICE

Commissioner for Patents
United States Patent and Trademark Office
P.O. Box 1450
Alexandria, VA 22313-1450
www.uspto.gov

Davidson, Davidson & Kappel, LLC
485 7th Avenue
14th Floor
New York NY 10018

MAILED

DEC 12 2011

OFFICE OF PETITIONS

In re Application of	:	
HECHT, ANDREW T.	:	DECISION ON PETITION
Application No. 13/031,700	:	
Filed: 02/22/2011	:	
Attorney Docket No. 874.1001CON3	:	

This is a decision on the petition under 37 CFR 1.137(b), filed November 25, 2011, to revive the above-identified application.

The application became abandoned for failure to reply in a timely manner to the Notice to File Missing Parts of Nonprovisional Application (Notice) mailed March 7, 2011. The Notice set a period for reply of two (2) months from the mail date of the Notice. Petitioner obtained an extension of time for response within the five month under the provisions of 37 CFR 1.136(a). Accordingly, the application became abandoned on October 8, 2011.

Petitioner has met the requirements to revive the above-identified application pursuant to 37 CFR 1.137(b). Petitioner submitted the required reply, paid the petition fee, and made the proper statement of unintentional delay. Accordingly, the petition is **granted.**

This matter is being referred to the Office of Patent Application Processing.

Telephone inquiries specific to this decision may be directed to the undersigned at (571) 272-3211.

C. T. Donnell

Christina Tartera Donnell
Senior Petitions Attorney
Office of Petitions

UNITED STATES PATENT AND TRADEMARK OFFICE

UNITED STATES DEPARTMENT OF COMMERCE
United States Patent and Trademark Office
Address: COMMISSIONER FOR PATENTS
P.O. Box 1450
Alexandria, Virginia 22313-1450
www.uspto.gov

APPLICATION NO.	FILING DATE	FIRST NAMED INVENTOR	ATTORNEY DOCKET NO.	CONFIRMATION NO.
13/031,780	02/22/2011	Taiji SASAKI	2011_0185A	5669

52349 7590 06/23/2011
WENDEROTH, LIND & PONACK L.L.P.
1030 15th Street, N.W.
Suite 400 East
Washington, DC 20005-1503

EXAMINER

ART UNIT	PAPER NUMBER
2484	

NOTIFICATION DATE	DELIVERY MODE
06/23/2011	ELECTRONIC

Please find below and/or attached an Office communication concerning this application or proceeding.

The time period for reply, if any, is set in the attached communication.

Notice of the Office communication was sent electronically on above-indicated "Notification Date" to the following e-mail address(es):

ddalecki@wenderoth.com
eoa@wenderoth.com

MAILED

JUN 22 2011

DIRECTOR OFFICE
TECHNOLOGY CENTER 2400

UNITED STATES PATENT AND TRADEMARK OFFICE

Commissioner for Patents
United States Patent and Trademark Office
P.O. Box 1450
Alexandria, VA 22313-1450
www.uspto.gov

WENDEROTH, LIND & PONACK L.L.P.
1030 15th Street, N.W.
Suite 400 East
Washington DC 20005-1503

In re Application of: SASAKI, TAIJI et al.
Application No. 13/031780
Filed: February 22, 2011
For: RECORDING MEDIUM, PLAYBACK DEVICE, AND INTEGRATED CIRCUIT

DECISION ON REQUEST TO PARTICIPATE IN PATENT PROSECUTION HIGHWAY PROGRAM AND PETITION TO MAKE SPECIAL UNDER 37 CFR 1.102(d)

This is a decision on the request to participate in the Patent Prosecution Highway (PPH) program and the petition under 37 CFR 1.102(d), filed 5/2/2011, to make the above-identified application special.

The petition is **GRANTED.**

A grantable request to participate in the PPH program and petition to make special require:

(1) The U.S. application must validly claim priority under 35 U.S.C. 119(a) to one or more applications filed in the JPO;

(2) Applicant must submit a copy of the allowable/patentable claim(s) from the JPO application(s) along with an English translation thereof and a statement that the English translation is accurate;

(3) All the claims in the U.S. application must sufficiently correspond or be amended to sufficiently correspond to the allowable/patentable claim(s) in the JPO application(s);

(4) Examination of the U.S. application has not begun;

(5) Applicant must submit a copy of all the office actions from each of the JPO application(s) containing the allowable/patentable claim(s) along with an English translation thereof and a statement that the English translation is accurate;

(6) Applicant must submit an IDS listing the documents cited by the JPO examiner in the JPO office action along with copies of documents except U.S. patents or U.S. patent application publications; and

(7) For petitions to make special filed with a PPH request *on or after* May 25, 2010, the USPTO has eliminated the fee. Petitions to make special filed with a PPH request **prior** *to* May 25, 2010 will be treated under 37 CFR 1.102(d) and the petition fee set forth in 37 CFR 1.17(h) **will** be required. (see Fed. Reg. vol. 75, No. 100, dated 05/25/10).

The request to participate in the PPH program and petition are found to comply with the above requirements. Accordingly, the above-identified application has been accorded "special" status.

Telephone inquiries concerning this decision should be directed to Aaron Strange at 571-272-3959.

All other inquiries concerning the examination or status of the application is accessible in the PAIR system at http://www.uspto.gov/ebc/index.html.

The application is being forwarded to the examiner for action on the merits commensurate with this decision

/Christopher Grant/
Christopher Grant
Quality Assurance Specialist
Technology Center 2400

Doc Code: PET.GREEN
Document Description: Petition for Green Tech Pilot

PTO/SB/420 (03-11)

PETITION TO MAKE SPECIAL UNDER THE GREEN TECHNOLOGY PILOT PROGRAM

Attorney Docket Number: HI-0615	Application Number (if known): 13/031,788	Filing date: February 22, 2011

First Named Inventor: Woo Sik LIM

Title: LIGHT EMITTING DEVICE, LIGHT EMITTING DEVICE PACKAGE, AND LIGHTING SYSTEM

APPLICANT HEREBY REQUESTS TO PARTICIPATE IN THE GREEN TECHNOLOGY PILOT PROGRAM FOR THE ABOVE-IDENTIFIED APPLICATION. See Instruction Sheet on page 2.

This petition must be timely filed electronically using the USPTO electronic filing system, EFS-Web.

1. By filing this petition:

   Applicant is requesting early publication: Applicant hereby requests early publication under 37 CFR 1.219 and the publication fee set forth in 37 CFR 1.18(d) accompanies this request.

2. By filing this petition: applicant is agreeing to make an election without traverse in a telephonic interview and elect an invention that meets the eligibility requirements for the Green Technology Pilot Program, if the Office determines that the claims are not obviously directed to a single invention. See Instruction Sheet.

3. This request is accompanied by statements of special status for the eligibility requirement.

4. The application contains no more than three (3) independent claims and twenty (20) total claims.

5. The application does not contain any multiple dependent claims.

6. Other attachments: _____

Signature	Date May 18, 2011
Name (Print/Typed) Daniel Y.J. Kim	Registration Number 36,168

Note: *Signatures of all the inventors or assignees of record of the entire interest or their representative(s) are required in accordance with 37 CFR 1.33 and 11.18. Please see 37 CFR 1.4(d) for the form of the signature. If necessary, submit multiple forms for more than one signature, see below*.*

☒ *Total of 2 forms are submitted.

If you need assistance in completing the form, call 1-800-PTO-9199 and select option 2.

Docket No.: **HI-0615** PATENT

IN THE UNITED STATES PATENT AND TRADEMARK OFFICE

In re Application of		Confirmation No.:	**5679**
Woo Sik LIM; Sung Kyoon KIM; Sung Ho CHOO and Byeong Kyun CHOI		Group Art Unit:	**2811**
Serial No.:	**13/031,788**	Examiner:	**To Be Assigned**
Filed:	**February 22, 2011**	Customer No.:	**34610**

For: **LIGHT EMITTING DEVICE, LIGHT EMITTING DEVICE PACKAGE, AND LIGHTING SYSTEM**

STATEMENT OF SPECIAL STATUS FOR ELIGIBILITY UNDER THE GREEN TECHNOLOGY PILOT PROGRAM

U.S. Patent and Trademark Office
Customer Service Window, **MAIL STOP PETITIONS**
Randolph Building
401 Dulany Street
Alexandria, Virginia 22314

Sir:

Special status is sought under 37 CFR §1.102 because the invention materially contributes to the more efficient utilization and conservation of energy resources.

Respectfully submitted,
KED & ASSOCIATES, LLP

Daniel Y.J. Kim
Registration No. 36,186

Correspondence Address:
P.O. Box 8638
Reston, VA 20195
703 766-3777 DYK/dak

Date: May 18, 2011

Please direct all correspondence to Customer Number 34610

Q:\Documents\2019-1174\280419

UNITED STATES PATENT AND TRADEMARK OFFICE

UNITED STATES DEPARTMENT OF COMMERCE
United States Patent and Trademark Office
Address: COMMISSIONER FOR PATENTS
P.O. Box 1450
Alexandria, Virginia 22313-1450
www.uspto.gov

APPLICATION NO.	FILING DATE	FIRST NAMED INVENTOR	ATTORNEY DOCKET NO.	CONFIRMATION NO.
13/031,788	02/22/2011	Woo Sik LIM	HI-0615	5679

34610 7590 05/25/2011
KED & ASSOCIATES, LLP
P.O. Box 8638
Reston, VA 20195

EXAMINER

ART UNIT	PAPER NUMBER
2811	

MAIL DATE	DELIVERY MODE
05/25/2011	PAPER

Please find below and/or attached an Office communication concerning this application or proceeding.

The time period for reply, if any, is set in the attached communication.

UNITED STATES PATENT AND TRADEMARK OFFICE

Commissioner for Patents
United States Patent and Trademark Office
P.O. Box 1450
Alexandria, VA 22313-1450
www.uspto.gov

KED & ASSOCIATES, LLP
P.O. Box 8638
Reston VA 20195

In re Application of	:	
LIM et al.	:	DECISION ON PETITION
Application No. 13/031,788	:	TO MAKE SPECIAL UNDER
Filed: February 22, 2011	:	THE GREEN TECHNOLOGY
Attorney Docket No. HI-0615	:	PILOT PROGRAM

This is a decision on the petition under 37 CFR 1.102, filed on May 18, 2011, to make the above-identified application special under the pilot program for applications pertaining to Green Technologies as set forth 74 Federal Register Notice 64666 (December 8, 2009) and amended by 75 Federal Register Notice 28554 (May 21, 2010) and 75 Federal Register Notice 69049 (November 10, 2010).

The petition is **GRANTED**.

A grantable petition to make an application special under 37 CFR 1.102 and the pilot program as set forth in 74 FR 64666 must be directed to a nonprovisional application filed under 35 USC 111(a) or be a national stage entry under 35 USC 371, exclusive of any reissue applications.

In order to qualify for special status, the following requirements must be met. 1) The application must have no more than 3 independent claims and no more than 20 total claims. 2) The application must not contain any multiple dependent claims. 3) The petition must state the basis for seeking special status, i.e., the claimed invention either: A) materially enhances the quality of the environment or B) materially contributes to: i) the discovery or development of renewable energy resources, ii) the more efficient utilization and conservation of energy resources, or iii) greenhouse gas emission reduction. 4) If the disclosure is not clear on its face that the claimed invention materially contributes under category (A) or (B), the petition must be accompanied by a statement by the applicant, assignee, or an attorney/agent registered to practice before the Office explaining how the materiality standard is met. 5) A statement that applicant will agree to make an election without traverse in a telephonic interview if a restriction requirement is made by the examiner. 6) The petition to make special must be filed electronically. 7) The petition must be filed at least one day prior to the date that a first Office Action appears in the Patent Application Information Retrieval (PAIR) system. 8) The petition must be accompanied by a request for early publication in compliance with 37 CFR 1.219 and include the publication fee as set forth in 37 CFR 1.18(d).

The requirement for a fee for consideration of the petition to make special for applications pertaining to Green Technologies has been waived.

The instant petition complies with items 1 – 8 above. Accordingly, the above-identified application has been accorded "special" status.

Telephone inquires concerning this decision should be directed to Lee W. Young at 571-272-4549.

The application is being forwarded to the Technology Center Art Unit 2811 for action on the merits commensurate with this decision.

Lee W. Young
Quality Assurance Specialist
Technology Center 2800

Doc Code: PET.GREEN
Document Description: Petition for Green Tech Pilot

PTO/SB/420 (03-11)

PETITION TO MAKE SPECIAL UNDER THE GREEN TECHNOLOGY PILOT PROGRAM

Attorney Docket Number: HI-0616	Application Number (if known): 13/031,803	Filing date: February 22, 2011

First Named Inventor: Sung Kyoon KIM

Title: LIGHT EMITTING DEVICE, LIGHT EMITTING DEVICE PACKAGE, AND LIGHTING SYSTEM

APPLICANT HEREBY REQUESTS TO PARTICIPATE IN THE GREEN TECHNOLOGY PILOT PROGRAM FOR THE ABOVE-IDENTIFIED APPLICATION. See Instruction Sheet on page 2.

This petition must be timely filed electronically using the USPTO electronic filing system, EFS-Web.

1. By filing this petition:

   Applicant is requesting early publication: Applicant hereby requests early publication under 37 CFR 1.219 and the publication fee set forth in 37 CFR 1.18(d) accompanies this request.

2. By filing this petition: applicant is agreeing to make an election without traverse in a telephonic interview and elect an invention that meets the eligibility requirements for the Green Technology Pilot Program, if the Office determines that the claims are not obviously directed to a single invention. See Instruction Sheet.

3. This request is accompanied by statements of special status for the eligibility requirement.

4. The application contains no more than three (3) independent claims and twenty (20) total claims.

5. The application does not contain any multiple dependent claims.

6. Other attachments: _____

Signature	Date May 10, 2011
Name (Print/Typed) Daniel Y.J. Kim	Registration Number 36,168

Note: *Signatures of all the inventors or assignees of record of the entire interest or their representative(s) are required in accordance with 37 CFR 1.33 and 11.18. Please see 37 CFR 1.4(d) for the form of the signature. If necessary, submit multiple forms for more than one signature, see below*.*

☐ *Total of 2 forms are submitted.

If you need assistance in completing the form, call 1-800-PTO-9199 and select option 2.

Docket No.: **HI-0616** PATENT

IN THE UNITED STATES PATENT AND TRADEMARK OFFICE

In re Application of	Confirmation No.: **5705**
Sung Kyoon KIM; Myeong Soo KIM; Woo Sik LIM; Min Gyu NA and Sung Ho CHOO	Group Art Unit: **2811**
Serial No.: **13/031,803**	Examiner: **To Be Assigned**
Filed: **February 22, 2011**	Customer No.: **34610**

For: **LIGHT EMITTING DEVICE, LIGHT EMITTING DEVICE PACKAGE, AND LIGHTING SYSTEM**

STATEMENT OF SPECIAL STATUS FOR ELIGIBILITY UNDER THE GREEN TECHNOLOGY PILOT PROGRAM

U.S. Patent and Trademark Office
Customer Service Window, **MAIL STOP PETITIONS**
Randolph Building
401 Dulany Street
Alexandria, Virginia 22314

Sir:

Special status is sought under 37 CFR §1.102 because the invention materially contributes to the more efficient utilization and conservation of energy resources.

Respectfully submitted,
KED & ASSOCIATES, LLP

Daniel Y.J. Kim
Registration No. 36,186

Correspondence Address:
P.O. Box 8638
Reston, VA 20195
703 766-3777 DYK/dak

Date: May 10, 2011

Please direct all correspondence to Customer Number 34610

Q:\Documents\2019-1175\278142

UNITED STATES PATENT AND TRADEMARK OFFICE

UNITED STATES DEPARTMENT OF COMMERCE
United States Patent and Trademark Office
Address: COMMISSIONER FOR PATENTS
P.O. Box 1450
Alexandria, Virginia 22313-1450
www.uspto.gov

APPLICATION NO.	FILING DATE	FIRST NAMED INVENTOR	ATTORNEY DOCKET NO.	CONFIRMATION NO.
13/031,803	02/22/2011	Sung Kyoon KIM	HI-0616	5705

34610 7590 05/16/2011
KED & ASSOCIATES, LLP
P.O. Box 8638
Reston, VA 20195

EXAMINER

ART UNIT	PAPER NUMBER
2811	

MAIL DATE	DELIVERY MODE
05/16/2011	PAPER

Please find below and/or attached an Office communication concerning this application or proceeding.

The time period for reply, if any, is set in the attached communication.

UNITED STATES PATENT AND TRADEMARK OFFICE

Commissioner for Patents
United States Patent and Trademark Office
P.O. Box 1450
Alexandria, VA 22313-1450
www.uspto.gov

KED & ASSOCIATES, LLP
P.O. Box 8638
Reston VA 20195

In re Application of	:	
KIM et al.	:	DECISION ON PETITION
Application No. 13/031,803	:	TO MAKE SPECIAL UNDER
Filed: February 22, 2011	:	THE GREEN TECHNOLOGY
Attorney Docket No. HI-0616	:	PILOT PROGRAM

This is a decision on the petition under 37 CFR 1.102, filed on May 10, 2011, to make the above-identified application special under the pilot program for applications pertaining to Green Technologies as set forth 74 Federal Register Notice 64666 (December 8, 2009) and amended by 75 Federal Register Notice 28554 (May 21, 2010) and 75 Federal Register Notice 69049 (November 10, 2010).

The petition is **GRANTED**.

A grantable petition to make an application special under 37 CFR 1.102 and the pilot program as set forth in 74 FR 64666 must be directed to a nonprovisional application filed under 35 USC 111(a) or be a national stage entry under 35 USC 371, exclusive of any reissue applications.

In order to qualify for special status, the following requirements must be met. 1) The application must have no more than 3 independent claims and no more than 20 total claims. 2) The application must not contain any multiple dependent claims. 3) The petition must state the basis for seeking special status, i.e., the claimed invention either: A) materially enhances the quality of the environment or B) materially contributes to: i) the discovery or development of renewable energy resources, ii) the more efficient utilization and conservation of energy resources, or iii) greenhouse gas emission reduction. 4) If the disclosure is not clear on its face that the claimed invention materially contributes under category (A) or (B), the petition must be accompanied by a statement by the applicant, assignee, or an attorney/agent registered to practice before the Office explaining how the materiality standard is met. 5) A statement that applicant will agree to make an election without traverse in a telephonic interview if a restriction requirement is made by the examiner. 6) The petition to make special must be filed electronically. 7) The petition must be filed at least one day prior to the date that a first Office Action appears in the Patent Application Information Retrieval (PAIR) system. 8) The petition must be accompanied by a request for early publication in compliance with 37 CFR 1.219 and include the publication fee as set forth in 37 CFR 1.18(d).

The requirement for a fee for consideration of the petition to make special for applications pertaining to Green Technologies has been waived.

The instant petition complies with items 1 – 8 above. Accordingly, the above-identified application has been accorded "special" status.

Telephone inquires concerning this decision should be directed to Lee W. Young at 571-272-4549.

The application is being forwarded to the Technology Center Art Unit 2811 for action on the merits commensurate with this decision.

Lee W. Young
Quality Assurance Specialist
Technology Center 2800

UNITED STATES PATENT AND TRADEMARK OFFICE

Commissioner for Patents
United States Patent and Trademark Office
P.O. Box 1450
Alexandria, VA 22313-1450
www.uspto.gov

MAILED
AUG 15 2011
OFFICE OF PETITIONS

FINNEGAN HENDERSON FARABOW GARRETT & DUNNER, LLP
901 NEW YORK AVENUE, NW
WASHINGTON, DC 20001-4413

In re Application of	:	
Vernon P. JOYNT, et *al.*	:	
Application No. 13/031,854	:	DECISION ON PETITION
Filed: February 22, 2011	:	TO MAKE SPECIAL UNDER
Attorney Docket No. **10036.0041-01000**	:	37 CFR 1.102(c)(1)
	:	

This is a decision on the petition under 37 CFR 1.102(c)(1), filed August 1, 2011, to make the above-identified application special based on applicant's age as set forth in M.P.E.P. § 708.02, Section IV.

The petition is **GRANTED**.

A grantable petition to make an application special under 37 CFR 1.102(c)(1) and MPEP § 708.02, Section IV: Applicant's Age must be accompanied by evidence showing that at least one of the applicants is 65 years of age, or more, such as a birth certificate or a statement by applicant. No fee is required

The instant petition includes declaration of inventor Vernon P. Joynt, attesting to his age. Accordingly, the above-identified application has been accorded "special" status.

Inquiries concerning either the examination or status of the application should be directed to the Technology Center.

Telephone inquiries concerning this decision should be directed to the undersigned at 571-272-7253.

The application is being forwarded to the Technology Center Art Unit 3641 for action on the merits commensurate with this decision.

/Monica A. Graves/
Petitions Examiner, Office of Petitions

PTO/SB/20PCT-KR (06-10)
Approved for use through 01/31/2012. OMB 0651-0058
U.S. Patent and Trademark Office; U. S. DEPARTMENT OF COMMERCE
Under the Paperwork Reduction Act of 1995, no persons are required to respond to a collection of information unless it displays a valid OMB control number.

REQUEST FOR PARTICIPATION IN THE PATENT COOPERATION TREATY - PATENT PROSECUTION HIGHWAY (PCT-PPH) PILOT PROGRAM BETWEEN THE KOREAN INTELLECTUAL PROPERTY OFFICE (KIPO) AND THE USPTO

Application No:	13031971	Filing date:	02/22/2011
First Named Inventor:	Marvin Keller Exline		
Title of the Invention:	Crack Resistant Coating and Method of Applying Crack Resistant Coating		

THIS REQUEST FOR PARTICIPATION IN THE PCT-PPH PILOT PROGRAM ALONG WITH THE REQUIRED DOCUMENTS MUST BE SUBMITTED VIA EFS-WEB. INFORMATION REGARDING EFS-WEB IS AVAILABLE AT HTTP://WWW.USPTO.GOV/EBC/EFS_HELP.HTML

APPLICANT HEREBY REQUESTS PARTICIPATION IN THE PCT-PPH PROGRAM AND PETITIONS TO MAKE THE ABOVE-IDENTIFIED APPLICATION SPECIAL UNDER THE PCT-PPH PROGRAM.

The above-identified application is (1) a national stage entry of the corresponding PCT application, or (2) a national stage entry of another PCT application which claims priority to the corresponding PCT application, or (3) a national application that claims domestic/ foreign priority to the corresponding PCT application, or (4) a national application which forms the basis for the priority claim in the corresponding PCT application, or (5) a continuing application of a U.S. application that satisfies one of (1) to (4) above, or (6) a U.S. application that claims domestic benefit to a U.S. provisional application which forms the basis for the priority claim in the corresponding PCT application.

The corresponding PCT application number(s) is/are: PCT/US2010/033533

The international filing date of the corresponding PCT application(s) is/are: 04 May 2010

I. List of Required Documents:

a. **A copy of the latest international work product (WO/ISA, WO/IPEA, or IPER) in the above–identified corresponding PCT application(s)**

- [x] Is attached.
- [ ] Is not attached because the document is already in the U.S. application.

b. **A copy of all claims which were indicated as having novelty, inventive step and industrial applicability in the above-identified corresponding PCT application(s).**

- [ ] Is attached.
- [x] Is not attached because the document is already in the U.S. application.

c. **English translations of the documents in a. and b. above are attached (if the documents are not in the English language). A statement that the English translation is accurate is attached for the document in b. above.**

This collection of information is required by 35 U.S.C. 119, 37 CFR 1.55, and 37 CFR 1.102(d). The information is required to obtain or retain a benefit by the public, which is to file (and by the USPTO to process) an application. Confidentiality is governed by 35 U.S.C. 122 and 37 CFR 1.11 and 1.14. This collection is estimated to take 2 hours to complete, including gathering, preparing, and submitting the completed application form to the USPTO. Time will vary depending upon the individual case. Any comments on the amount of time you require to complete this form and/or suggestions for reducing this burden should be sent to the Chief Information Officer, U.S. Patent and Trademark Office, U.S. Department of Commerce, P.O. Box 1450, Alexandria, VA 22313-1450. DO NOT SEND FEES OR COMPLETED FORMS TO THIS ADDRESS.

Approved for use through 01/31/2012. OMB 0651-0058
U.S.Patent and Trademark Office; U.S. DEPARTMENT OF COMMERCE
Under the Paperwork Reduction Act of 1995, no persons are required to respond to a collection of information unless it displays a valid OMB control number.

REQUEST FOR PARTICIPATION IN THE PCT-PPH PILOT PROGRAM BETWEEN THE KIPO AND THE USPTO

(continued)

Application No.:	13031971
First Named Inventor:	Marvin Keller Exline

d. **(1) An information disclosure statement listing the documents cited in the international work products (ISR, WO/ISA, WO/IPEA, IPER) of the corresponding PCT application.**

- [✔] Is attached
- [ ] Has already been filed in the above-identified U.S. application on _____

(2) Copies of all documents (except) for U.S. patents or U.S. patent application publications)

- [✔] Are attached.
- [ ] Have already been filed in the above-identified U.S. application on _____

II. Claims Correspondence Table:

Claims in US Application	Patentable Claims in the corresponding PCT Application	Explanation regarding the correspondence
1 -28	10-36	

III. All the claims in the US application sufficiently correspond to the patentable claims in the corresponding PCT application.

Signature /cassandralwilkinson/	Date February 22, 2011
Name (Print/Typed) Cassandra L. Wilkinson	Registration Number 58,879

Privacy Act Statement

The **Privacy Act of 1974 (P.L. 93-579)** requires that you be given certain information in connection with your submission of the attached form related to a patent application or patent. Accordingly, pursuant to the requirements of the Act, please be advised that: (1) the general authority for the collection of this information is 35 U.S.C. 2(b)(2); (2) furnishing of the information solicited is voluntary; and (3) the principal purpose for which the information is used by the U.S. Patent and Trademark Office is to process and/or examine your submission related to a patent application or patent. If you do not furnish the requested information, the U.S. Patent and Trademark Office may not be able to process and/or examine your submission, which may result in termination of proceedings or abandonment of the application or expiration of the patent.

The information provided by you in this form will be subject to the following routine uses:

1. The information on this form will be treated confidentially to the extent allowed under the Freedom of Information Act (5 U.S.C. 552) and the Privacy Act (5 U.S.C 552a). Records from this system of records may be disclosed to the Department of Justice to determine whether disclosure of these records is required by the Freedom of Information Act.
2. A record from this system of records may be disclosed, as a routine use, in the course of presenting evidence to a court, magistrate, or administrative tribunal, including disclosures to opposing counsel in the course of settlement negotiations.
3. A record in this system of records may be disclosed, as a routine use, to a Member of Congress submitting a request involving an individual, to whom the record pertains, when the individual has requested assistance from the Member with respect to the subject matter of the record.
4. A record in this system of records may be disclosed, as a routine use, to a contractor of the Agency having need for the information in order to perform a contract. Recipients of information shall be required to comply with the requirements of the Privacy Act of 1974, as amended, pursuant to 5 U.S.C. 552a(m).
5. A record related to an International Application filed under the Patent Cooperation Treaty in this system of records may be disclosed, as a routine use, to the International Bureau of the World Intellectual Property Organization, pursuant to the Patent Cooperation Treaty.
6. A record in this system of records may be disclosed, as a routine use, to another federal agency for purposes of National Security review (35 U.S.C. 181) and for review pursuant to the Atomic Energy Act (42 U.S.C. 218(c)).
7. A record from this system of records may be disclosed, as a routine use, to the Administrator, General Services, or his/her designee, during an inspection of records conducted by GSA as part of that agency's responsibility to recommend improvements in records management practices and programs, under authority of 44 U.S.C. 2904 and 2906. Such disclosure shall be made in accordance with the GSA regulations governing inspection of records for this purpose, and any other relevant (*i.e.*, GSA or Commerce) directive. Such disclosure shall not be used to make determinations about individuals.
8. A record from this system of records may be disclosed, as a routine use, to the public after either publication of the application pursuant to 35 U.S.C. 122(b) or issuance of a patent pursuant to 35 U.S.C. 151. Further, a record may be disclosed, subject to the limitations of 37 CFR 1.14, as a routine use, to the public if the record was filed in an application which became abandoned or in which the proceedings were terminated and which application is referenced by either a published application, an application open to public inspection or an issued patent.
9. A record from this system of records may be disclosed, as a routine use, to a Federal, State, or local law enforcement agency, if the USPTO becomes aware of a violation or potential violation of law or regulation.

UNITED STATES PATENT AND TRADEMARK OFFICE

UNITED STATES DEPARTMENT OF COMMERCE
United States Patent and Trademark Office
Address: COMMISSIONER FOR PATENTS
P.O. Box 1450
Alexandria, Virginia 22313-1450
www.uspto.gov

APPLICATION NO.	FILING DATE	FIRST NAMED INVENTOR	ATTORNEY DOCKET NO.	CONFIRMATION NO.
13/031,971	02/22/2011	Marvin Keller Exline	ROA524-00/08397A	6000

24118 7590 05/10/2011
HEAD, JOHNSON & KACHIGIAN
228 W 17TH PLACE
TULSA, OK 74119

EXAMINER
MELLOTT, JAMES M

ART UNIT	PAPER NUMBER
1712	

NOTIFICATION DATE	DELIVERY MODE
05/10/2011	ELECTRONIC

Please find below and/or attached an Office communication concerning this application or proceeding.

The time period for reply, if any, is set in the attached communication.

Notice of the Office communication was sent electronically on above-indicated "Notification Date" to the following e-mail address(es):

dhagan@hjklaw.com
clong@hjklaw.com
thamm@hjklaw.com

UNITED STATES PATENT AND TRADEMARK OFFICE

Commissioner for Patents
United States Patent and Trademark Office
P.O. Box 1450
Alexandria, VA 22313-1450
www.uspto.gov

MAY 10 2011

WG

In re application of Marvin Exline et al. Serial No. 13/031,971 Filed: February 22, 2011 For: CRACK RESISTANT COATING AND METHOD OF APPLYING CRACK RESISTANT COATING	: : : : : :	DECISION ON REQUEST TO PARTICIPATE IN PATENT PROSECUTION HIGHWAY PROGRAM AND PETITION TO MAKE SPECIAL UNDER 37 CFR 1.102(a)

This is a decision on the request to participate in the PCT Patent Prosecution Highway (PCT-PPH) pilot program and the petition under 37 CFR 1.102(a), filed February 22, 2011, to make the above-identified application special.

The request and petition are **GRANTED**.

A grantable request to participate in the PCT-PPH pilot program and petition to make special require:

(1) The U.S. application must disclose an eligible relationship to one or more PCT applications where the ISA or IPEA are the JPO, EPO, KIPO or USPTO;

(2) At least one claim in the PCT application has novelty, inventive step, and industrial applicability and must be free of any observations in Box VIII in the latest work product in the international stage or applicant must identify and explain why the claim(s) is/are not subject to the observation in Box VIII;

(3) Applicant must submit a copy of the claim(s) from the PCT application(s) that have novelty, inventive step, and industrial applicability along with an English translation thereof and a statement that the English translation is accurate, if the claims are not in the English language;

(4) All the claims in the U.S. application must sufficiently correspond or be amended to sufficiently correspond to the claim(s) that have novelty, inventive step, and industrial applicability in the PCT application(s);

(5) Examination of the U.S. application has not begun;

(6) Applicant must submit a copy of the latest international work product from the PCT application indicating that the claim(s) have novelty, inventive step, and industrial applicability along with an English translation thereof if the latest international work product is not in the English language; and

(7) Applicant must submit an IDS listing the documents cited by the PCT examiner in the international work product along with copies of documents except U.S. patents or U.S. patent application publications.

The request to participate in the PPH program and petition comply with the above requirements. Accordingly, the above-identified application has been accorded "special" status.

The application is being forwarded to the examiner for action on the merits commensurate with this decision.

Any inquiry regarding this decision should be directed to Walter D. Griffin, Supervisory Patent Examiner, at (571) 272-1447.

All other inquiries concerning the examination or status of the application is accessible in the PAIR system at http://www.uspto.gov/ebc/index.html.

/Walter D. Griffin/

Walter D. Griffin
Supervisory Patent Examiner
Technology Center 1700

UNITED STATES PATENT AND TRADEMARK OFFICE

UNITED STATES DEPARTMENT OF COMMERCE
United States Patent and Trademark Office
Address: COMMISSIONER FOR PATENTS
P.O. Box 1450
Alexandria, Virginia 22313-1450
www.uspto.gov

APPLICATION NO.	FILING DATE	FIRST NAMED INVENTOR	ATTORNEY DOCKET NO.	CONFIRMATION NO.
13/031,971	02/22/2011	Marvin Keller Exline	ROA524-00/08397A	6000

24118 7590 05/12/2011
HEAD, JOHNSON & KACHIGIAN
228 W 17TH PLACE
TULSA, OK 74119

EXAMINER
MELLOTT, JAMES M

ART UNIT	PAPER NUMBER
1712	

NOTIFICATION DATE	DELIVERY MODE
05/12/2011	ELECTRONIC

Please find below and/or attached an Office communication concerning this application or proceeding.

The time period for reply, if any, is set in the attached communication.

Notice of the Office communication was sent electronically on above-indicated "Notification Date" to the following e-mail address(es):

dhagan@hjklaw.com
clong@hjklaw.com
thamm@hjklaw.com

UNITED STATES PATENT AND TRADEMARK OFFICE

Commissioner for Patents
United States Patent and Trademark Office
P.O. Box 1450
Alexandria, VA 22313-1450
www.uspto.gov

MAY 12 2011

BC

In re application of	:	DECISION ON REQUEST TO
Marvin K. Exline et al.	:	PARTICIPATE IN PATENT
Serial No. 13/031,971	:	PROSECUTION HIGHWAY
Filed: February 22, 2011	:	PROGRAM AND
Attorney Docket No: ROA524-00/08397A	:	PETITION TO MAKE SPECIAL
	:	UNDER 37 CFR 1.102(a)

This is a decision on the request for reconsideration to participate in the PCT Patent Prosecution Highway (PCT-PPH) pilot program and the petition under 37 CFR 1.102(a), filed February 22, 2011, to make the above-identified application special.

The request and petition are **GRANTED**.

A grantable request to participate in the PCT-PPH pilot program and petition to make special require:

(1) The U.S. application must disclose an eligible relationship to one or more PCT applications where the ISA or IPEA are the JPO, EPO, or USPTO;

(2) At least one claim in the PCT application has novelty, inventive step, and industrial applicability and must be free of any observations in Box VIII in the latest work product in the international stage or applicant must identify and explain why the claim(s) is/are not subject to the observation in Box VIII;

(3) Applicant must submit a copy of the claim(s) from the PCT application(s) that have novelty, inventive step, and industrial applicability along with an English translation thereof and a statement that the English translation is accurate, if the claims are not in the English language;

(4) All the claims in the U.S. application must sufficiently correspond or be amended to sufficiently correspond to the claim(s) that have novelty, inventive step, and industrial applicability in the PCT application(s);

(5) Examination of the U.S. application has not begun;

(6) Applicant must submit a copy of the latest international work product from the PCT application indicating that the claim(s) have novelty, inventive step, and industrial applicability along with an English translation thereof if the latest international work

product is not in the English language; and

(7) Applicant must submit an IDS listing the documents cited by the PCT examiner in the international work product along with copies of documents except U.S. patents or U.S. patent application publications.

The request to participate in the PPH program and petition comply with the above requirements. Accordingly, the above-identified application has been accorded "special" status.

The application is being forwarded to the examiner for action on the merits commensurate with this decision.

Any inquiry regarding this decision should be directed to Blaine Copenheaver, Quality Assurance Specialist, at (571) 272-1156.

All other inquiries concerning the examination or status of the application is accessible in the PAIR system at http://www.uspto.gov/ebc/index.html.

/Blaine Copenheaver/

Blaine Copenheaver
Quality Assurance Specialist
Technology Center 1700

UNITED STATES PATENT AND TRADEMARK OFFICE

Commissioner for Patents
United States Patent and Trademark Office
P.O. Box 1450
Alexandria, VA 22313-1450
www.uspto.gov

RABIN & BERDO PC
1101 14TH STREET NW
SUITE 500
WASHINGTON DC 20005

MAILED

MAR 20 2012

OFFICE OF PETITIONS

In re Application of	:	DECISION
Lin, et al.	:	ON PETITION
Application No. 13/031,976	:	
Filed: February 22, 2011	:	
Attorney Docket Number: YUSO-120	:	

This is in response to the petition under 37 CFR 1.84(a)(2), filed February 22, 2011, for acceptance of color drawings.

The petition is **DISMISSED**.

Any request for reconsideration of this decision must be submitted within **TWO (2) MONTHS** from the mail date of this decision. Extensions of time under 37 CFR 1.136(a) are permitted. The reconsideration request should include a cover letter entitled, "Renewed Petition under 37 CFR 1.84(a)(2)". No further petition fee is required for a renewed petition.

A grantable petition under 37 C.F.R. 1.84(a)(2) must be accompanied by the following:

(1) The fee set forth in 37 C.F.R. 1.17(h);

(2) Three (3) sets of color drawings, or one (1) set if filed via EFS, and

(3) The specification contains appropriate language referring to the color drawings as the first paragraph in that portion of the specification relating to the brief description of the drawings.

In addition, MPEP 608.02 states that a petition to accept color drawings will only be granted when the Office "has determined that a color drawing or photograph is the only practical medium by which to disclose in a printed utility patent the subject matter to be patented."

Here, the Office has determined that color drawings are not necessary for an understanding of the invention.

Further correspondence with respect to this matter should be addressed as follows:

By mail: Mail Stop Petitions
Commissioner for Patents
PO Box 1450
Alexandria VA 22313-1450

By FAX: 571-273-8300
Attn: Office of Petitions

The application is being forwarded to Group Art Unit 2882 for examination in due course.

Telephone inquiries regarding this decision should be directed to Petitions Attorney Cliff Congo at (571)272-3207.

Jose Dees
Petitions Examiner
Office of Petitions

UNITED STATES PATENT AND TRADEMARK OFFICE

Commissioner for Patents
United States Patent and Trademark Office
P.O. Box 1450
Alexandria, VA 22313-1450
www.uspto.gov

In re Application of
Andrew F. Fanton

Application No. 13032001

Filed: February 22,2011

Attorney Docket No. FORT-007515

:DECISION ON PETITION TO MAKE SPECIAL
:UNDER 37 CFR 1.102(c)(1)

This is a decision on the electronic petition under 37 CFR 1.102 (c)(1), filed 14-APR-2011 to make the above-identified application special based on applicant's age as set forth in MPEP § 708.02, Section IV.

The petition is **GRANTED**.

A grantable petition to make an application special under 37 CFR 1.102(c)(1), MPEP § 708.02, Section IV: Applicant's Age must include a statement by applicant or a registered practitioner having evidence that applicant is at least 65 years of age. No fee is required.

Accordingly, the above-identified application has been accorded "special" status and will be taken up for action by the examiner upon the completion of all pre-examination processing.

Telephone inquiries concerning this electronic decision should be directed to the Electronic Business Center at 866-217-9197.

All other inquiries concerning either the examination or status of the application should be directed to the Technology Center.

Doc code : PET.OP.AGE
Description : Petition to make special based on Age/Health

PTO/SB/130 (07-09)
Approved for use through 07/31/2012. OMB 0651- 0031
U.S. Patent and Trademark Office; U.S. DEPARTMENT OF COMMERCE
Under the Paperwork Reduction Act of 1995, no persons are required to respond to a collection of information unless it contains a valid OMB control number

PETITION TO MAKE SPECIAL BASED ON AGE FOR ADVANCEMENT OF EXAMINATION UNDER 37 CFR 1.102(c)(1)

Application Information

Application Number	13032001	Confirmation Number	6060	Filing Date	2011-02-22
Attorney Docket Number (optional)	FORT-007515	Art Unit		Examiner	
First Named Inventor	Andrew F. Fanton				
Title of Invention	SOFTWARE LICENSE ENFORCEMENT				

Attention: Office of Petitions
An application may be made special for advancement of examination upon filing of a petition showing that the applicant is 65 years of age, or more. No fee is required with such a petition. See 37 CFR 1.102(c)(1) and MPEP 708.02 (IV).

APPLICANT HEREBY PETITIONS TO MAKE SPECIAL FOR ADVANCEMENT OF EXAMINATION IN THIS APPLICATION UNDER 37 CFR 1.102(c)(1) and MPEP 708.02 (IV) ON THE BASIS OF THE APPLICANT'S AGE.

A grantable petition requires one of the following items:
(1) Statement by one named inventor in the application that he/she is 65 years of age, or more; or
(2) Certification by a registered attorney/agent having evidence such as a birth certificate, passport, driver's license, etc. showing one named inventor in the application is 65 years of age, or more.

Name of Inventor who is 65 years of age, or older

Given Name	Middle Name	Family Name	Suffix
Edwin	L.	Harper	

A signature of the applicant or representative is required in accordance with 37 CFR 1.33 and 10.18.
Please see 37 CFR 1.4(d) for the format of the signature.

Select (1) or (2) :

○ (1) I am an inventor in this application and I am 65 years of age, or more.

◉ (2) I am an attorney or agent registered to practice before the Patent and Trademark Office, and I certify that I am in possession of evidence, and will retain such in the application file record, showing that the inventor listed above is 65 years of age, or more.

Signature	/Michael A DeSanctis/	Date (YYYY-MM-DD)	2011-04-14
Name	Michael A. DeSanctis	Registration Number	39957

PTO/SB/130 (07-09)
Approved for use through 07/31/2012. OMB 0651- 0031
U.S. Patent and Trademark Office; U.S. DEPARTMENT OF COMMERCE
Under the Paperwork Reduction Act of 1995, no persons are required to respond to a collection of information unless it contains a valid OMB control number

Privacy Act Statement

The Privacy Act of 1974 (P.L. 93-579) requires that you be given certain information in connection with your submission of the attached form related to a patent application or patent. Accordingly, pursuant to the requirements of the Act, please be advised that: (1) the general authority for the collection of this information is 35 U.S.C. 2(b)(2); (2) furnishing of the information solicited is voluntary; and (3) the principal purpose for which the information is used by the U.S. Patent and Trademark Office is to process and/or examine your submission related to a patent application or patent. If you do not furnish the requested information, the U.S. Patent and Trademark Office may not be able to process and/or examine your submission, which may result in termination of proceedings or abandonment of the application or expiration of the patent.

The information provided by you in this form will be subject to the following routine uses:

1. The information on this form will be treated confidentially to the extent allowed under the Freedom of Information Act (5 U.S.C. 552) and the Privacy Act (5 U.S.C. 552a). Records from this system of records may be disclosed to the Department of Justice to determine whether the Fr eedom of Information Act requires disclosure of these records.

2. A record from this system of records may be disclosed, as a routine use, in the course of presenting evidence to a court, magistrate, or administrative tribunal, including disclosures to opposing counsel in the course of settlement negotiations.

3. A record in this system of records may be disclosed, as a routine use, to a Member of Congress submitting a request involving an individual, to whom the record pertains, when the individual has requested assistance from the Member with respect to the subject matter of the record.

4. A record in this system of records may be disclosed, as a routine use, to a contractor of the Agency having need for the information in order to perform a contract. Recipients of information shall be required to comply with the requirements of the Privacy Act of 1974, as amended, pursuant to 5 U.S.C. 552a(m).

5. A record related to an International Application filed under the Patent Cooperation Treaty in this system of records may be disclosed, as a routine use, to the International Bureau of the World Intellectual Property Organization, pursuant to the Patent Cooperation Treaty.

6. A record in this system of records may be disclosed, as a routine use, to another federal agency for purposes of National Security review (35 U.S.C. 181) and for review pursuant to the Atomic Energy Act (42 U.S.C. 218(c)).

7. A record from this system of records may be disclosed, as a routine use, to the Administrator, General Services, or his/her designee, during an inspection of records conducted by GSA as part of that agency's responsibility to recommend improvements in records management practices and programs, under authority of 44 U.S.C. 2904 and 2906. Such disclosure shall be made in accordance with the GSA regulations governing inspection of records for this purpose, and any other relevant (i.e., GSA or Commerce) directive. Such disclosure shall not be used to make determinations about indivi duals.

8. A record from this system of records may be disclosed, as a routine use, to the public after either publication of the application pursuant to 35 U.S.C. 122(b) or issuance of a patent pursuant to 35 U.S.C. 151. Further, a record may be disclosed, subject to the limitations of 37 CFR 1.14, as a routine use, to the public if the record was filed in an application which became abandoned or in which the proceedings were terminated and which application is referenced by either a published application, an application open to public inspections or an issued patent.

9. A record from this system of records may be disclosed, as a routine use, to a Federal, State, or local law enforcement agency, if the USPTO becomes aware of a violation or potential violation of law or regulation.

PTO/SB/20PCT-KR (06-10)
Approved for use through 01/31/2012. OMB 0651-0058
U.S. Patent and Trademark Office; U. S. DEPARTMENT OF COMMERCE
Under the Paperwork Reduction Act of 1995, no persons are required to respond to a collection of information unless it displays a valid OMB control number.

REQUEST FOR PARTICIPATION IN THE PATENT COOPERATION TREATY - PATENT PROSECUTION HIGHWAY (PCT-PPH) PILOT PROGRAM BETWEEN THE KOREAN INTELLECTUAL PROPERTY OFFICE (KIPO) AND THE USPTO

Application No:	13/032,063	Filing date:	02/22/2011
First Named Inventor:	TEMPLIN, Christopher		
Title of the Invention:	Encryption System using Web Browsers and Untrusted Web Servers		

THIS REQUEST FOR PARTICIPATION IN THE PCT-PPH PILOT PROGRAM ALONG WITH THE REQUIRED DOCUMENTS MUST BE SUBMITTED VIA EFS-WEB. INFORMATION REGARDING EFS-WEB IS AVAILABLE AT HTTP://WWW.USPTO.GOV/EBC/EFS_HELP.HTML

APPLICANT HEREBY REQUESTS PARTICIPATION IN THE PCT-PPH PROGRAM AND PETITIONS TO MAKE THE ABOVE-IDENTIFIED APPLICATION SPECIAL UNDER THE PCT-PPH PROGRAM.

The above-identified application is (1) a national stage entry of the corresponding PCT application, or (2) a national stage entry of another PCT application which claims priority to the corresponding PCT application, or (3) a national application that claims domestic/ foreign priority to the corresponding PCT application, or (4) a national application which forms the basis for the priority claim in the corresponding PCT application, or (5) a continuing application of a U.S. application that satisfies one of (1) to (4) above, or (6) a U.S. application that claims domestic benefit to a U.S. provisional application which forms the basis for the priority claim in the corresponding PCT application.

The corresponding PCT application number(s) is/are: PCT/US2011/025700

The international filing date of the corresponding PCT application(s) is/are: February 22, 2011

I. List of Required Documents:

a. **A copy of the latest international work product (WO/ISA, WO/IPEA, or IPER) in the above–identified corresponding PCT application(s)**

☑ Is attached.

☐ Is not attached because the document is already in the U.S. application.

b. **A copy of all claims which were indicated as having novelty, inventive step and industrial applicability in the above-identified corresponding PCT application(s).**

☑ Is attached.

☐ Is not attached because the document is already in the U.S. application.

c. **English translations of the documents in a. and b. above are attached (if the documents are not in the English language). A statement that the English translation is accurate is attached for the document in b. above.**

This collection of information is required by 35 U.S.C. 119, 37 CFR 1.55, and 37 CFR 1.102(d). The information is required to obtain or retain a benefit by the public, which is to file (and by the USPTO to process) an application. Confidentiality is governed by 35 U.S.C. 122 and 37 CFR 1.11 and 1.14. This collection is estimated to take 2 hours to complete, including gathering, preparing, and submitting the completed application form to the USPTO. Time will vary depending upon the individual case. Any comments on the amount of time you require to complete this form and/or suggestions for reducing this burden should be sent to the Chief Information Officer, U.S. Patent and Trademark Office, U.S. Department of Commerce, P.O. Box 1450, Alexandria, VA 22313-1450. DO NOT SEND FEES OR COMPLETED FORMS TO THIS ADDRESS.

Approved for use through 01/31/2012. OMB 0651-0058
U.S.Patent and Trademark Office; U.S. DEPARTMENT OF COMMERCE
Under the Paperwork Reduction Act of 1995, no persons are required to respond to a collection of information unless it displays a valid OMB control number.

REQUEST FOR PARTICIPATION IN THE PCT-PPH PILOT PROGRAM BETWEEN THE KIPO AND THE USPTO

(continued)

Application No.:	13/032,063
First Named Inventor:	TEMPLIN, Christopher

d. **(1) An information disclosure statement listing the documents cited in the international work products (ISR, WO/ISA, WO/IPEA, IPER) of the corresponding PCT application.**

☐ Is attached

☑ Has already been filed in the above-identified U.S. application on 12/12/2011

(2) Copies of all documents (except) for U.S. patents or U.S. patent application publications)

☐ Are attached.

☑ Have already been filed in the above-identified U.S. application on 12/12/2011

II. Claims Correspondence Table:

Claims in US Application	Patentable Claims in the corresponding PCT Application	Explanation regarding the correspondence
1-2	1-2	Claims 1-2 in the US application are identical to claims 1-2 in the PCT application.

III. All the claims in the US application sufficiently correspond to the patentable claims in the corresponding PCT application.

Signature /Robert Plotkin, Reg#43861/	Date January 5, 2012
Name (Print/Typed) Robert Plotkin, Esq.	Registration Number 43861

Privacy Act Statement

The **Privacy Act of 1974 (P.L. 93-579)** requires that you be given certain information in connection with your submission of the attached form related to a patent application or patent. Accordingly, pursuant to the requirements of the Act, please be advised that: (1) the general authority for the collection of this information is 35 U.S.C. 2(b)(2); (2) furnishing of the information solicited is voluntary; and (3) the principal purpose for which the information is used by the U.S. Patent and Trademark Office is to process and/or examine your submission related to a patent application or patent. If you do not furnish the requested information, the U.S. Patent and Trademark Office may not be able to process and/or examine your submission, which may result in termination of proceedings or abandonment of the application or expiration of the patent.

The information provided by you in this form will be subject to the following routine uses:

1. The information on this form will be treated confidentially to the extent allowed under the Freedom of Information Act (5 U.S.C. 552) and the Privacy Act (5 U.S.C 552a). Records from this system of records may be disclosed to the Department of Justice to determine whether disclosure of these records is required by the Freedom of Information Act.
2. A record from this system of records may be disclosed, as a routine use, in the course of presenting evidence to a court, magistrate, or administrative tribunal, including disclosures to opposing counsel in the course of settlement negotiations.
3. A record in this system of records may be disclosed, as a routine use, to a Member of Congress submitting a request involving an individual, to whom the record pertains, when the individual has requested assistance from the Member with respect to the subject matter of the record.
4. A record in this system of records may be disclosed, as a routine use, to a contractor of the Agency having need for the information in order to perform a contract. Recipients of information shall be required to comply with the requirements of the Privacy Act of 1974, as amended, pursuant to 5 U.S.C. 552a(m).
5. A record related to an International Application filed under the Patent Cooperation Treaty in this system of records may be disclosed, as a routine use, to the International Bureau of the World Intellectual Property Organization, pursuant to the Patent Cooperation Treaty.
6. A record in this system of records may be disclosed, as a routine use, to another federal agency for purposes of National Security review (35 U.S.C. 181) and for review pursuant to the Atomic Energy Act (42 U.S.C. 218(c)).
7. A record from this system of records may be disclosed, as a routine use, to the Administrator, General Services, or his/her designee, during an inspection of records conducted by GSA as part of that agency's responsibility to recommend improvements in records management practices and programs, under authority of 44 U.S.C. 2904 and 2906. Such disclosure shall be made in accordance with the GSA regulations governing inspection of records for this purpose, and any other relevant (*i.e.*, GSA or Commerce) directive. Such disclosure shall not be used to make determinations about individuals.
8. A record from this system of records may be disclosed, as a routine use, to the public after either publication of the application pursuant to 35 U.S.C. 122(b) or issuance of a patent pursuant to 35 U.S.C. 151. Further, a record may be disclosed, subject to the limitations of 37 CFR 1.14, as a routine use, to the public if the record was filed in an application which became abandoned or in which the proceedings were terminated and which application is referenced by either a published application, an application open to public inspection or an issued patent.
9. A record from this system of records may be disclosed, as a routine use, to a Federal, State, or local law enforcement agency, if the USPTO becomes aware of a violation or potential violation of law or regulation.

UNITED STATES PATENT AND TRADEMARK OFFICE

Commissioner for Patents
United States Patent and Trademark Office
P.O. Box 1450
Alexandria, VA 22313-1450
www.uspto.gov

ROBERT PLOTKIN, PC
15 NEW ENGLAND EXECUTIVE
OFFICE PARK
BURLINGTON MA 01803

MAILED
JAN 31 2012
OFFICE OF PETITIONS

In re Application of
TEMPLIN, et al
Application No.: 13/032,063
Filed: February 22, 2011
Attorney Docket No.: L0002-1001
For: ENCRYPTION SYSTEM USING WEB BROWSERS AND UNTRUSTED WEB SERVERS

: DECISION ON REQUEST TO
: PARTICIPATE IN THE PATENT
: PROSECUTION HIGHWAY
: PROGRAM AND PETITION
: TO MAKE SPECIAL UNDER
: 37 CFR 1.102(a)

This is a decision on the request to participate in the PCT Patent Prosecution Highway (PCT-PPH) pilot program and the petition under 37 CFR 1.102(a), filed on January 5, 2012, to make the above-identified application special.

The request and petition are **GRANTED**.

Discussion

A grantable request to participate in the PCT-PPH pilot program and petition to make special require:

(1) The U.S. application must have an eligible relationship to one or more PCT applications where the ISA or IPEA are the JPO, EPO, Australia, Austria, KIPO, NPI, Russia, Finland, Spain, Sweden, China or USPTO;

(2) At least one claim in the PCT application has novelty, inventive step, and industrial applicability and must be free of any observations in Box VIII in the latest work product in the international stage or applicant must identify and explain why the claim(s) is/are not subject to the observation in Box VIII;

(3) Applicant must submit a copy of the claim(s) from the PCT application(s) that have novelty, inventive step, and industrial applicability along with an English translation thereof and a statement that the English translation is accurate, if the claims are not in the English language;

(4) All the claims in the U.S. application must sufficiently correspond or be amended to sufficiently correspond to the claim(s) that have novelty, inventive step, and industrial applicability in the PCT application(s);

(5) Examination of the U.S. application has not begun;

(6) Applicant must submit a copy of the latest international work product from the PCT application indicating that the claim(s) have novelty, inventive step, and industrial applicability along with an English translation thereof and a statement that the English translation is accurate if the latest international work product is not in the English language;

(7) Applicant must submit an IDS listing the documents cited by the PCT examiner in the international work product along with copies of documents except U.S. patents or U.S. patent application publications.

The request to participate in the PCT-PPH pilot program and petition comply with the above requirements. Accordingly, the above-identified application has been accorded "special" status.

Telephone inquiries concerning this decision should be directed to the undersigned at (571) 272-6735.

All other inquiries concerning the examination or status of the application is accessible in the PAIR system at http://www.uspto.gov/ebc.index.html.

This application is being forwarded to Technology Center 2432 for action on the merits commensurate with this decision.

/Diane Goodwyn/
Diane Goodwyn
Petitions Examiner
Office of Petitions

IN THE UNITED STATES PATENT AND TRADEMARK OFFICE

First Named Inventor: Nicholas ALTHOFF	)
Confirmation No.: 6206	)
	)
Serial No.: 13/032,084	)
	)
Filing Date: February 22, 2011	)
	)
Atty Docket No.: 220205-5 (25229-0003-D1)	)

Commissioner for Patents
P.O. Box 1450
Alexandria, VA 22313-1450

Statement Concerning the Basis for the Special Status

SIR:

Applicant respectfully submits that Special Status is sought on the basis that the present invention materially contributes to the development of renewable energy resources or energy conservation.

The undersigned attorney may be contacted at the number below to facilitate the resolution of any matters. Please charge any fees that are incurred in connection with this Statement to deposit account no. 09-0470.

Respectfully submitted,

General Electric Company

By : /Douglas D. Zhang/
Douglas D. Zhang
Reg. No. 37,985

Dated: May 3, 2011

GE Global Patent Operation
2 Corporate Drive, Suite 648
Shelton, CT 06484
203-944-6755

Doc Code: PET.GREEN
Document Description: Petition for Green Tech Pilot

PTO/SB/420 (03-11)

PETITION TO MAKE SPECIAL UNDER THE GREEN TECHNOLOGY PILOT PROGRAM

Attorney Docket Number: 220205-5 (25229-0003-D1)	Application Number (if known): 13/032,084	Filing date: February 22, 2011

First Named Inventor: Nicholas ALTHOFF

Title: INTEGRATED SHEAR WEBS FOR WIND TURBINE BLADES

APPLICANT HEREBY REQUESTS TO PARTICIPATE IN THE GREEN TECHNOLOGY PILOT PROGRAM FOR THE ABOVE-IDENTIFIED APPLICATION. See Instruction Sheet on page 2.

This petition must be timely filed electronically using the USPTO electronic filing system, EFS-Web.

1. By filing this petition:

   Applicant is requesting early publication: Applicant hereby requests early publication under 37 CFR 1.219 and the publication fee set forth in 37 CFR 1.18(d) accompanies this request.

2. By filing this petition: applicant is agreeing to make an election without traverse in a telephonic interview and elect an invention that meets the eligibility requirements for the Green Technology Pilot Program, if the Office determines that the claims are not obviously directed to a single invention. See Instruction Sheet.

3. This request is accompanied by statements of special status for the eligibility requirement.

4. The application contains no more than three (3) independent claims and twenty (20) total claims.

5. The application does not contain any multiple dependent claims.

6. Other attachments: Statement Concerning the Basis for the Special Status

Signature /Douglas D. Zhang/	Date May 3, 2011
Name (Print/Typed) Douglas D. Zhang	Registration Number 37,985

Note: *Signatures of all the inventors or assignees of record of the entire interest or their representative(s) are required in accordance with 37 CFR 1.33 and 11.18. Please see 37 CFR 1.4(d) for the form of the signature. If necessary, submit multiple forms for more than one signature, see below*.*

☐ *Total of _____ forms are submitted.

If you need assistance in completing the form, call 1-800-PTO-9199 and select option 2.

Privacy Act Statement

The **Privacy Act of 1974 (P.L. 93-579)** requires that you be given certain information in connection with your submission of the attached form related to a patent application or patent. Accordingly, pursuant to the requirements of the Act, please be advised that: (1) the general authority for the collection of this information is 35 U.S.C. 2(b)(2); (2) furnishing of the information solicited is voluntary; and (3) the principal purpose for which the information is used by the U.S. Patent and Trademark Office is to process and/or examine your submission related to a patent application or patent. If you do not furnish the requested information, the U.S. Patent and Trademark Office may not be able to process and/or examine your submission, which may result in termination of proceedings or abandonment of the application or expiration of the patent.

The information provided by you in this form will be subject to the following routine uses:

1. The information on this form will be treated confidentially to the extent allowed under the Freedom of Information Act (5 U.S.C. 552) and the Privacy Act (5 U.S.C 552a). Records from this system of records may be disclosed to the Department of Justice to determine whether disclosure of these records is required by the Freedom of Information Act.
2. A record from this system of records may be disclosed, as a routine use, in the course of presenting evidence to a court, magistrate, or administrative tribunal, including disclosures to opposing counsel in the course of settlement negotiations.
3. A record in this system of records may be disclosed, as a routine use, to a Member of Congress submitting a request involving an individual, to whom the record pertains, when the individual has requested assistance from the Member with respect to the subject matter of the record.
4. A record in this system of records may be disclosed, as a routine use, to a contractor of the Agency having need for the information in order to perform a contract. Recipients of information shall be required to comply with the requirements of the Privacy Act of 1974, as amended, pursuant to 5 U.S.C. 552a(m).
5. A record related to an International Application filed under the Patent Cooperation Treaty in this system of records may be disclosed, as a routine use, to the International Bureau of the World Intellectual Property Organization, pursuant to the Patent Cooperation Treaty.
6. A record in this system of records may be disclosed, as a routine use, to another federal agency for purposes of National Security review (35 U.S.C. 181) and for review pursuant to the Atomic Energy Act (42 U.S.C. 218(c)).
7. A record from this system of records may be disclosed, as a routine use, to the Administrator, General Services, or his/her designee, during an inspection of records conducted by GSA as part of that agency's responsibility to recommend improvements in records management practices and programs, under authority of 44 U.S.C. 2904 and 2906. Such disclosure shall be made in accordance with the GSA regulations governing inspection of records for this purpose, and any other relevant (*i.e.*, GSA or Commerce) directive. Such disclosure shall not be used to make determinations about individuals.
8. A record from this system of records may be disclosed, as a routine use, to the public after either publication of the application pursuant to 35 U.S.C. 122(b) or issuance of a patent pursuant to 35 U.S.C. 151. Further, a record may be disclosed, subject to the limitations of 37 CFR 1.14, as a routine use, to the public if the record was filed in an application which became abandoned or in which the proceedings were terminated and which application is referenced by either a published application, an application open to public inspection or an issued patent.
9. A record from this system of records may be disclosed, as a routine use, to a Federal, State, or local law enforcement agency, if the USPTO becomes aware of a violation or potential violation of law or regulation.

UNITED STATES PATENT AND TRADEMARK OFFICE

UNITED STATES DEPARTMENT OF COMMERCE
United States Patent and Trademark Office
Address: COMMISSIONER FOR PATENTS
P.O. Box 1450
Alexandria, Virginia 22313-1450
www.uspto.gov

APPLICATION NO.	FILING DATE	FIRST NAMED INVENTOR	ATTORNEY DOCKET NO.	CONFIRMATION NO.
13/032,084	02/22/2011	Nicholas Althoff	220205-5 (25229-0003-D1)	6206

77749 7590 05/18/2011
McNees Wallace & Nurick LLC
100 Pine Street
P.O. Box 1166
Harrisburg, PA 17108-1166

EXAMINER

ART UNIT	PAPER NUMBER
3726	

MAIL DATE	DELIVERY MODE
05/18/2011	PAPER

Please find below and/or attached an Office communication concerning this application or proceeding.

The time period for reply, if any, is set in the attached communication.

UNITED STATES PATENT AND TRADEMARK OFFICE

Commissioner for Patents
United States Patent and Trademark Office
P.O. Box 1450
Alexandria, VA 22313-1450
www.uspto.gov

McNees Wallace & Nurick LLC
100 Pine Street
P.O. Box 1166
Harrisburg PA 17108-1166

In re Application of	:	
ALTHOFF, NICHOLAS et al	:	DECISION ON PETITION
Application No. 13/032,084	:	TO MAKE SPECIAL UNDER
Filed: Feb. 22, 2011	:	THE GREEN TECHNOLOGY
Attorney Docket No. 220205-5 (25229-0003-D1)	:	PILOT PROGRAM

This is a decision on the petition under 37 CFR 1.102, filed May 5, 2011 to make the above-identified application special under the pilot program for applications pertaining to Green Technologies as set forth in 74 Federal Register Notice 64666 (December 8, 2009) and amended by 75 Federal Register Notice 28554 (May 21, 2010) and 75 Federal Register Notice 69049 (November 10, 2010).

The petition is **dismissed.**

If reconsideration of this decision is desired, a petition for reconsideration must be filed within ONE (1) MONTH OR THIRTY (30) DAYS from the mail date of this decision, whichever is longer. No extension of this time limit can be granted under 37 CFR 1.136(a) or (b). The petition for reconsideration should include an exhaustive attempt to provide the lacking item(s) noted below, since, after a decision on the petition for reconsideration, no further reconsideration or review of the matter will be undertaken by the Director.

A grantable petition to make an application special under 37 CFR 1.102 and the pilot program as set forth in 74 FR 64666 must be directed to a nonprovisional application filed under 35 USC 111(a) or be a national stage entry under 35 USC 371, exclusive of any reissue applications.

In order to qualify for special status, the following requirements must be met. 1) The application must have no more than 3 independent claims and no more than 20 total claims. 2) The application must not contain any multiple dependent claims. 3) The petition must state the basis for seeking special status, i.e., the claimed invention either: A) materially enhances the quality of the environment or B) materially contributes to: i) the discovery or development of renewable energy resources, ii) the more efficient utilization and conservation of energy resources, or iii) greenhouse gas emission reduction. 4) If the disclosure is not clear on its face that the claimed invention materially contributes under category (A) or (B), the petition must be accompanied by a statement by the applicant, assignee, or an attorney/agent registered to practice before the

Office explaining how the materiality standard is met. 5) A statement that applicant will agree to make an election without traverse in a telephonic interview if a restriction requirement is made by the examiner. 6) The petition to make special must be filed electronically. 7) The petition must be filed at least one day prior to the date that a first Office Action appears in the Patent Application Information Retrieval (PAIR) system. 8) The petition must be accompanied by a request for early publication in compliance with 37 CFR 1.219 and include the publication fee as set forth in 37 CFR 1.18(d).

The requirement for a fee for consideration of the petition to make special for applications pertaining to Green Technologies has been waived. The petition lacks item #4.

In regard to item 4, petitioner should note that the instant petition includes a statement identifying the basis for the special status (i.e., whether the instant invention (1) materially enhances the quality of the environment or materially contributes to (2) development of renewable energy resources or energy conservation, or (3) greenhouse gas reduction) as required by sections II and III of the notice. However, as stated in the notice, applicant must also provide a statement pertaining to the materiality standard if the application disclosure is not clear on its face as to the materiality of the basis for the special status of the invention. This petition lacks such a statement and it is not agreed that the application on its face meets that materiality standard. It is not clear how the claimed the first shell portion and one shear web forming integral body will provide and enhance the quality of the environment or contribute to development of renewable energy resources or energy conservation or greenhouse gas reduction.

Any reconsideration of this decision should be submitted through the USPTO electronic filing system, EFS-Web, and selecting the document description of "Petition for Green Tech Pilot" on the EFS-Web screen.

Telephone inquiries concerning this decision should be directed to Henry C. Yuen at 571-272-4856. This application will be forwarded to the Technology Center Art Unit 3745 for action in its regular turn.

/Henry C. Yuen/

Henry C. Yuen
Quality Assurance Specialist
Technology Center 3700

IN THE UNITED STATES PATENT AND TRADEMARK OFFICE

First Named Inventor: Nicholas Althoff	)
Confirmation No.: 6206	)
	)
Serial No.: 13/032,084	)
	)
Filing Date: 02-22-2011	)
	)
Atty Docket No.: 220205-5 (25229-0003-D1)	)

Commissioner for Patents
P.O. Box 1450
Alexandria, VA 22313-1450

Request for Reconsideration

SIR:

This is responsive to the Decision on Petition, dated as mailed 18 May 2011, in the above-referenced application.

Applicant respectfully requests reconsideration of Applicant's Petition to Make Special on the basis that the present invention materially contributes to the development of renewable energy resources or energy conservation.

Applicant respectfully submits that the subject matter described herein relates generally to elongated airfoils for use with wind turbines and methods for fabricating elongated airfoils for wind turbines. In particular, the present invention is directed to wind turbine blades and methods for making wind turbine blades.

Wind turbine blades may be very large and typically are fabricated utilizing hand lay-up composite fabrication techniques. For example, one method may infuse two outer shells of glass fiber with resin. Once the two shells have been cured, prefabricated, cured composite shear webs are bonded to a load bearing spar of a first shell of the two shells. The bonding typically takes place utilizing an adhesive, such as epoxy or other suitable adhesive. Once the adhesive bonding the first shell to the shear web has cured, the second shell is attached to

the shear web and bonded thereto. Thereafter, the entire assembly is cured to provide a finished wind turbine blade. These methods suffer from the drawback that there is a large number of adhesive joints used to join various components together. These adhesive joints undesirably add weight and complexity to the wind turbine blade and increase time required the fabrication process. In addition, the large number of adhesive joints also precludes the ability to have tight tolerances and junctions, particularly at junctions between the shell and the shear web of the wind turbine blade. (see at least paragraph [0005]).

It is well known that an increase in rotor blade size increases the energy production of a wind turbine, while a decrease in weight also furthers the efficiency of a wind turbine. Presently, large commercial wind turbines in existence and in development are capable of generating from about 1.5 to about 12.5 megawatts of power. These larger wind turbines may have rotor blade assemblies larger than 90 meters in diameter. Accordingly, efforts to increase rotor blade size, decrease rotor blade weight, and increase rotor blade strength, while also improving rotor blade aerodynamics, aid in the continuing growth of wind turbine technology and the adoption of wind energy as an alternative energy source.

Embodiments described herein provide a wind turbine blade and methods for fabricating elongated wind turbine blades. The disclosed methods utilize fewer adhesive joints to provide tighter material tolerances that result in a lighter weight wind turbine blade. Thus embodiments of the present invention materially contribute to the development of renewable energy by providing stronger, lighter wind turbine blades without sacrificing the increased energy development

capabilities associated with larger wind turbine size. As such, embodiments of the present invention promote increased energy production.

The undersigned attorney may be contacted at the number below to facilitate the resolution of any matters. Please charge any fees that are incurred in connection with this Statement to deposit account no. 09-0470.

Respectfully submitted,

General Electric Company

By : /Allison W Mages/
Allison Weiner Mages
Reg. No. 57,275

Dated: June 13, 2011

GE Global Patent Operation
2 Corporate Drive, Suite 648
Shelton, CT 06484
203-944-6730

UNITED STATES PATENT AND TRADEMARK OFFICE

UNITED STATES DEPARTMENT OF COMMERCE
United States Patent and Trademark Office
Address: COMMISSIONER FOR PATENTS
P.O. Box 1450
Alexandria, Virginia 22313-1450
www.uspto.gov

APPLICATION NO.	FILING DATE	FIRST NAMED INVENTOR	ATTORNEY DOCKET NO.	CONFIRMATION NO.
13/032,084	02/22/2011	Nicholas Althoff	220205-5 (25229-0003-D1)	6206

77749 7590 06/30/2011
McNees Wallace & Nurick LLC
100 Pine Street
P.O. Box 1166
Harrisburg, PA 17108-1166

EXAMINER

ART UNIT	PAPER NUMBER
3726	

MAIL DATE	DELIVERY MODE
06/30/2011	PAPER

Please find below and/or attached an Office communication concerning this application or proceeding.

The time period for reply, if any, is set in the attached communication.

UNITED STATES PATENT AND TRADEMARK OFFICE

Commissioner for Patents
United States Patent and Trademark Office
P.O. Box 1450
Alexandria, VA 22313-1450
www.uspto.gov

6/30/11

McNees Wallace & Nurick LLC
100 Pine Street
P.O. Box 1166
Harrisburg PA 17108-1166

In re Application of	:	
Althoff et al.	:	DECISION ON PETITION
Application No. 13/032,084	:	TO MAKE SPECIAL UNDER
Filed: 2/22/2011	:	THE GREEN TECHNOLOGY
Attorney Docket No. **220205-5 (25229-0003-D1)**	:	PILOT PROGRAM

This is a decision on the request for reconsideration, filed 6/14/2011, to make the above-identified application special under the pilot program for applications pertaining to Green Technologies as set forth in 74 Federal Register Notice 64666 (December 8, 2009) and amended by 75 Federal Register Notice 28554 (May 21, 2010) and 75 Federal Register Notice 69049 (November 10, 2010).

The petition is **GRANTED**.

A grantable petition to make an application special under 37 CFR 1.102 and the pilot program as set forth in 74 FR 64666 must be directed to a nonprovisional application filed under 35 USC 111(a) or be a national stage entry under 35 USC 371, exclusive of any reissue applications.

In order to qualify for special status, the following requirements must be met. 1) The application must have no more than 3 independent claims and no more than 20 total claims. 2) The application must not contain any multiple dependent claims. 3) The petition must state the basis for seeking special status, i.e., the claimed invention either: A) materially enhances the quality of the environment or B) materially contributes to: i) the discovery or development of renewable energy resources, ii) the more efficient utilization and conservation of energy resources, or iii) greenhouse gas emission reduction. 4) If the disclosure is not clear on its face that the claimed invention materially contributes under category (A) or (B), the petition must be accompanied by a statement by the applicant, assignee, or an attorney/agent registered to practice before the Office explaining how the materiality standard is met. 5) A statement that applicant will agree to make an election without traverse in a telephonic interview if a restriction requirement is made by the examiner. 6) The petition to make special must be filed electronically. 7) The petition must be filed at least one day prior to the date that a first Office Action appears in the Patent Application Information Retrieval (PAIR) system. 8) The petition must be accompanied by a

request for early publication in compliance with 37 CFR 1.219 and include the publication fee as set forth in 37 CFR 1.18(d).

The requirement for a fee for consideration of the petition to make special for applications pertaining to Green Technologies has been waived.

The instant petition complies with items 1 – 8 above. Accordingly, the above-identified application has been accorded "special" status.

Telephone inquires concerning this decision should be directed to Tom Dunn at 571-272-1171.

The application is being forwarded to the Technology Center Art Unit 3726 for action on the merits commensurate with this decision.

/Tom Dunn/

Tom Dunn
Quality Assurance Specialist
Technology Center 1700

PTO/SB/20PCT-KR (06-10)
Approved for use through 01/31/2012. OMB 0651-0058
U.S. Patent and Trademark Office; U. S. DEPARTMENT OF COMMERCE
Under the Paperwork Reduction Act of 1995, no persons are required to respond to a collection of information unless it displays a valid OMB control number.

REQUEST FOR PARTICIPATION IN THE PATENT COOPERATION TREATY - PATENT PROSECUTION HIGHWAY (PCT-PPH) PILOT PROGRAM BETWEEN THE KOREAN INTELLECTUAL PROPERTY OFFICE (KIPO) AND THE USPTO

Application No:	13032092	Filing date:	22 February 2012
First Named Inventor:	MITROVICH		
Title of the Invention:	Method and Apparatus for Applying Variable Rates of Solid Stick Lubricant		

THIS REQUEST FOR PARTICIPATION IN THE PCT-PPH PILOT PROGRAM ALONG WITH THE REQUIRED DOCUMENTS MUST BE SUBMITTED VIA EFS-WEB. INFORMATION REGARDING EFS-WEB IS AVAILABLE AT HTTP://WWW.USPTO.GOV/EBC/EFS_HELP.HTML

APPLICANT HEREBY REQUESTS PARTICIPATION IN THE PCT-PPH PROGRAM AND PETITIONS TO MAKE THE ABOVE-IDENTIFIED APPLICATION SPECIAL UNDER THE PCT-PPH PROGRAM.

The above-identified application is (1) a national stage entry of the corresponding PCT application, or (2) a national stage entry of another PCT application which claims priority to the corresponding PCT application, or (3) a national application that claims domestic/ foreign priority to the corresponding PCT application, or (4) a national application which forms the basis for the priority claim in the corresponding PCT application, or (5) a continuing application of a U.S. application that satisfies one of (1) to (4) above, or (6) a U.S. application that claims domestic benefit to a U.S. provisional application which forms the basis for the priority claim in the corresponding PCT application.

The corresponding PCT application number(s) is/are: PCT/US2011/025725

The international filing date of the corresponding PCT application(s) is/are: 22 February 2011

I. List of Required Documents:

a. **A copy of the latest international work product (WO/ISA, WO/IPEA, or IPER) in the above–identified corresponding PCT application(s)**

☑ Is attached.

☐ Is not attached because the document is already in the U.S. application.

b. **A copy of all claims which were indicated as having novelty, inventive step and industrial applicability in the above-identified corresponding PCT application(s).**

☑ Is attached.

☐ Is not attached because the document is already in the U.S. application.

c. **English translations of the documents in a. and b. above are attached (if the documents are not in the English language). A statement that the English translation is accurate is attached for the document in b. above.**

This collection of information is required by 35 U.S.C. 119, 37 CFR 1.55, and 37 CFR 1.102(d). The information is required to obtain or retain a benefit by the public, which is to file (and by the USPTO to process) an application. Confidentiality is governed by 35 U.S.C. 122 and 37 CFR 1.11 and 1.14. This collection is estimated to take 2 hours to complete, including gathering, preparing, and submitting the completed application form to the USPTO. Time will vary depending upon the individual case. Any comments on the amount of time you require to complete this form and/or suggestions for reducing this burden should be sent to the Chief Information Officer, U.S. Patent and Trademark Office, U.S. Department of Commerce, P.O. Box 1450, Alexandria, VA 22313-1450. DO NOT SEND FEES OR COMPLETED FORMS TO THIS ADDRESS.

Approved for use through 01/31/2012. OMB 0651-0058
U.S.Patent and Trademark Office; U.S. DEPARTMENT OF COMMERCE
Under the Paperwork Reduction Act of 1995, no persons are required to respond to a collection of information unless it displays a valid OMB control number.

REQUEST FOR PARTICIPATION IN THE PCT-PPH PILOT PROGRAM BETWEEN THE KIPO AND THE USPTO

(continued)

Application No.:	13032092
First Named Inventor:	MITROVICH

d. **(1) An information disclosure statement listing the documents cited in the international work products (ISR, WO/ISA, WO/IPEA, IPER) of the corresponding PCT application.**

☐ Is attached

☑ Has already been filed in the above-identified U.S. application on 6 January 2012

(2) Copies of all documents (except) for U.S. patents or U.S. patent application publications)

☐ Are attached.

☑ Have already been filed in the above-identified U.S. application on 6 January 2012

II. Claims Correspondence Table:

Claims in US Application	Patentable Claims in the corresponding PCT Application	Explanation regarding the correspondence
1-2	1-2	Identical
3	1	Depends from Claim 1 which sufficiently corresponds with PCT claim 1.
4	3	Identical
5	1	Depends from Claim 1 which sufficiently corresponds with PCT claim 1.
6	4	Depends from Claim 5. Together contain all limitations of PCT claim 4.
7	1	Depends from Claim 1 which sufficiently corresponds with PCT claim 1.
8	5	Depends from Claim 7. Together contain all limitations of PCT claim 5.
9-11	6-8	Identical
12	1	Depends from Claim 1 which sufficiently corresponds with PCT claim 1.
13-16	9-12	Identical
17	15	Depends from Claim 15 which sufficiently corresponds with PCT claim 11.
18-20	13-15	Identical

III. All the claims in the US application sufficiently correspond to the patentable claims in the corresponding PCT application.

Signature /Stephen M. Nipper/	Date 2012-01-24
Name (Print/Typed) Stephen M. Nipper	Registration Number 46260

Privacy Act Statement

The **Privacy Act of 1974 (P.L. 93-579)** requires that you be given certain information in connection with your submission of the attached form related to a patent application or patent. Accordingly, pursuant to the requirements of the Act, please be advised that: (1) the general authority for the collection of this information is 35 U.S.C. 2(b)(2); (2) furnishing of the information solicited is voluntary; and (3) the principal purpose for which the information is used by the U.S. Patent and Trademark Office is to process and/or examine your submission related to a patent application or patent. If you do not furnish the requested information, the U.S. Patent and Trademark Office may not be able to process and/or examine your submission, which may result in termination of proceedings or abandonment of the application or expiration of the patent.

The information provided by you in this form will be subject to the following routine uses:

1. The information on this form will be treated confidentially to the extent allowed under the Freedom of Information Act (5 U.S.C. 552) and the Privacy Act (5 U.S.C 552a). Records from this system of records may be disclosed to the Department of Justice to determine whether disclosure of these records is required by the Freedom of Information Act.
2. A record from this system of records may be disclosed, as a routine use, in the course of presenting evidence to a court, magistrate, or administrative tribunal, including disclosures to opposing counsel in the course of settlement negotiations.
3. A record in this system of records may be disclosed, as a routine use, to a Member of Congress submitting a request involving an individual, to whom the record pertains, when the individual has requested assistance from the Member with respect to the subject matter of the record.
4. A record in this system of records may be disclosed, as a routine use, to a contractor of the Agency having need for the information in order to perform a contract. Recipients of information shall be required to comply with the requirements of the Privacy Act of 1974, as amended, pursuant to 5 U.S.C. 552a(m).
5. A record related to an International Application filed under the Patent Cooperation Treaty in this system of records may be disclosed, as a routine use, to the International Bureau of the World Intellectual Property Organization, pursuant to the Patent Cooperation Treaty.
6. A record in this system of records may be disclosed, as a routine use, to another federal agency for purposes of National Security review (35 U.S.C. 181) and for review pursuant to the Atomic Energy Act (42 U.S.C. 218(c)).
7. A record from this system of records may be disclosed, as a routine use, to the Administrator, General Services, or his/her designee, during an inspection of records conducted by GSA as part of that agency's responsibility to recommend improvements in records management practices and programs, under authority of 44 U.S.C. 2904 and 2906. Such disclosure shall be made in accordance with the GSA regulations governing inspection of records for this purpose, and any other relevant (*i.e.*, GSA or Commerce) directive. Such disclosure shall not be used to make determinations about individuals.
8. A record from this system of records may be disclosed, as a routine use, to the public after either publication of the application pursuant to 35 U.S.C. 122(b) or issuance of a patent pursuant to 35 U.S.C. 151. Further, a record may be disclosed, subject to the limitations of 37 CFR 1.14, as a routine use, to the public if the record was filed in an application which became abandoned or in which the proceedings were terminated and which application is referenced by either a published application, an application open to public inspection or an issued patent.
9. A record from this system of records may be disclosed, as a routine use, to a Federal, State, or local law enforcement agency, if the USPTO becomes aware of a violation or potential violation of law or regulation.

UNITED STATES PATENT AND TRADEMARK OFFICE

Commissioner for Patents
United States Patent and Trademark Office
P.O. Box 1450

MAILED
MAR 05 2012
OFFICE OF PETITIONS

Buchanan Nipper LLC
P.O. Box 700
Perrysburg OH 43552-0700

In re Application of
Michael J. MITROVICH
Application No. 13/032,092
Filed: February 22, 2011
Atty. Docket No.: 1235-003
For: METHOD AND APPARATUS FOR APPLYING VARIABLE RATES OF SOLID STICK LUBRICANT

: DECISION ON REQUEST TO
: PARTICIPATE IN PCT-PPH PROGRAM
: AND PETITION TO MAKE SPECIAL
: UNDER 37 CFR 1.102(a)

This is a decision on the request to participate in the PCT Patent Prosecution Highway (PCT-PPH) program and the petition under 37 CFR 1.102(a), filed January 24, 2012, to make the above-identified application special.

The request and petition are **GRANTED.**

A grantable request to participate in the PCT –PPH program and petition to make special under 37 CFR 1.102(a) require:

(1) the U.S. application must have an eligible relationship to one or more PCT application where the ISA or IPEA are the JPO, EPO, KIPO, IPAU, Russia, Spain, Finland, Austria, or USPTO;

(2) at least one claim in the PCT application has novelty, inventive step, and industrial applicability and must be free of any observations in Box VIII in the latest work product in the international stage or applicant must identify and explain why the claim(s) is/are not subject to the observation in Box VIII;

(3) applicant must submit a copy of the claim(s) from the PCT application(s) that have novelty, inventive step, and industrial applicability along with an English translation thereof and a statement that the English translation is accurate, if the claims are not in the English language;

(4) all the claims in the U.S. application must sufficiently correspond or be amended to sufficiently correspond to the claim(s) that have novelty, inventive step, and industrial applicability in the PCT application(s);

(5) examination of the U.S. application has not begun;

(6) applicant must submit a copy of the latest international work product from the PCT application indicating that the claim(s) have novelty, inventive step, and industrial applicability along with an English translation thereof;

(7) applicant must submit an IDS listing the documents cited by the PCT examiner in the international work product along with copies of documents except U.S. patents or U.S. patent application publications; and

(8) applicant is required to submit a claims correspondence table in English which indicates how all the claims in the U.S. application correspond to the claims indicated as having novelty, inventive step, and industrial applicability in the latest international work product.

The request to participate in the PCT-PPH program and petition comply with the above requirements. Accordingly, the above-identified application has been accorded "special" status.

Telephone inquiries concerning this decision should be directed to Robert DeWitty, Petitions Attorney, Office of Petitions (571-272-8427). All other inquiries concerning the examination or status of the application is accessible in the PAIR system at http://www.uspto.gov/ebc.index.html.

This application will be forwarded to Technology Center Art Unit 3654 for action commensurate with this decision.

Thurma T. Page

David Bucci
Petitions Examiner
Office of Petitions

Doc Code: PET.GREEN
Document Description: Petition for Green Tech Pilot

PTO/SB/420 (03-11)

PETITION TO MAKE SPECIAL UNDER THE GREEN TECHNOLOGY PILOT PROGRAM

Attorney Docket Number: 20110222001	Application Number (if known): 13/032,190	Filing date: 02-22-2011

First Named Inventor: Kim Meghan Tran

Title: Nighttime Solar Panel

APPLICANT HEREBY REQUESTS TO PARTICIPATE IN THE GREEN TECHNOLOGY PILOT PROGRAM FOR THE ABOVE-IDENTIFIED APPLICATION. See Instruction Sheet on page 2.

This petition must be timely filed electronically using the USPTO electronic filing system, EFS-Web.

1. By filing this petition:

   Applicant is requesting early publication: Applicant hereby requests early publication under 37 CFR 1.219 and the publication fee set forth in 37 CFR 1.18(d) accompanies this request.

2. By filing this petition: applicant is agreeing to make an election without traverse in a telephonic interview and elect an invention that meets the eligibility requirements for the Green Technology Pilot Program, if the Office determines that the claims are not obviously directed to a single invention. See Instruction Sheet.

3. This request is accompanied by statements of special status for the eligibility requirement.

4. The application contains no more than three (3) independent claims and twenty (20) total claims.

5. The application does not contain any multiple dependent claims.

6. Other attachments: _____

Signature /Kim Meghan Tran/	Date 06/09/2011
Name (Print/Typed) Kim Meghan Tran	Registration Number

Note: *Signatures of all the inventors or assignees of record of the entire interest or their representative(s) are required in accordance with 37 CFR 1.33 and 11.18. Please see 37 CFR 1.4(d) for the form of the signature. If necessary, submit multiple forms for more than one signature, see below*.*

☐ *Total of 1 forms are submitted.

If you need assistance in completing the form, call 1-800-PTO-9199 and select option 2.

UNITED STATES PATENT AND TRADEMARK OFFICE

UNITED STATES DEPARTMENT OF COMMERCE
United States Patent and Trademark Office
Address: COMMISSIONER FOR PATENTS
P.O. Box 1450
Alexandria, Virginia 22313-1450
www.uspto.gov

APPLICATION NO.	FILING DATE	FIRST NAMED INVENTOR	ATTORNEY DOCKET NO.	CONFIRMATION NO.
13/032,190	02/22/2011	Kim Meghan Tran	20110222001	6414

76649 7590 07/13/2011
Robert F. Gilbert
4219 Indian Sunrise Court
Houston, TX 77059

EXAMINER

ART UNIT	PAPER NUMBER
1725	

MAIL DATE	DELIVERY MODE
07/13/2011	PAPER

Please find below and/or attached an Office communication concerning this application or proceeding.

The time period for reply, if any, is set in the attached communication.

UNITED STATES PATENT AND TRADEMARK OFFICE

Commissioner for Patents
United States Patent and Trademark Office
P.O. Box 1450
Alexandria, VA 22313-1450
www.uspto.gov

Robert F. Gilbert
4219 Indian Sunrise Court
Houston TX 77059

JUL 13 2011

In re Application of	:	
TRAN, KIM MEGHAN	:	DECISION ON PETITION
Application No. 13/032,190	:	TO MAKE SPECIAL UNDER
Filed: 02/22/2011	:	THE GREEN TECHNOLOGY
Attorney Docket No. 20110222001	:	PILOT PROGRAM

This is a decision on the petition under 37 CFR 1.102, filed June 9, 2011, to make the above-identified application special under the pilot program for applications pertaining to Green Technologies as set forth in 74 Federal Register Notice 64666 (December 8, 2009) and amended by 75 Federal Register Notice 28554 (May 21, 2010) and 75 Federal Register Notice 69049 (November 10, 2010).

The petition is **GRANTED**.

A grantable petition to make an application special under 37 CFR 1.102 and the pilot program as set forth in 74 FR 64666 must be directed to a nonprovisional application filed under 35 USC 111(a) or be a national stage entry under 35 USC 371, exclusive of any reissue applications.

In order to qualify for special status, the following requirements must be met. 1) The application must have no more than 3 independent claims and no more than 20 total claims. 2) The application must not contain any multiple dependent claims. 3) The petition must state the basis for seeking special status, i.e., the claimed invention either: A) materially enhances the quality of the environment or B) materially contributes to: i) the discovery or development of renewable energy resources, ii) the more efficient utilization and conservation of energy resources, or iii) greenhouse gas emission reduction. 4) If the disclosure is not clear on its face that the claimed invention materially contributes under category (A) or (B), the petition must be accompanied by a statement by the applicant, assignee, or an attorney/agent registered to practice before the Office explaining how the materiality standard is met. 5) A statement that applicant will agree to make an election without traverse in a telephonic interview if a restriction requirement is made by the examiner. 6) The petition to make special must be filed electronically. 7) The petition must be filed at least one day prior to the date that a first Office Action appears in the Patent Application Information Retrieval (PAIR) system. 8) The petition must be accompanied by a request for early publication in compliance with 37 CFR 1.219 and include the publication fee as set forth in 37 CFR 1.18(d).

The requirement for a fee for consideration of the petition to make special for applications pertaining to Green Technologies has been waived.

The instant petition complies with items 1 – 8 above. Accordingly, the above-identified application has been accorded "special" status.

Telephone inquires concerning this decision should be directed to Tom Dunn at 571-272-1171.

The application is being forwarded to the Technology Center Art Unit 1725 for action on the merits commensurate with this decision.

/Tom Dunn/

Tom Dunn
Quality Assurance Specialist
Technology Center 1700

UNITED STATES PATENT AND TRADEMARK OFFICE

UNITED STATES DEPARTMENT OF COMMERCE
United States Patent and Trademark Office
Address: COMMISSIONER FOR PATENTS
P.O. Box 1450
Alexandria, Virginia 22313-1450
www.uspto.gov

APPLICATION NO.	FILING DATE	FIRST NAMED INVENTOR	ATTORNEY DOCKET NO.	CONFIRMATION NO.
13/032,209	02/22/2011	Kenichi UESUGI	375829US26	6443

7590 03/05/2012
OBLON, SPIVAK, MCCLELLAND MAIER & NEUSTADT, L.L.P.
1940 DUKE STREET
ALEXANDRIA, VA 22314

EXAMINER
ROSS, DANA

ART UNIT	PAPER NUMBER
3725	

NOTIFICATION DATE	DELIVERY MODE
03/05/2012	ELECTRONIC

DECISION GRANTING PETITION UNDER 37 CFR 1.138(d)

The declaration of express abandonment is recognized

This is in response to the petition under 37 CFR 1.138(d), requesting for a refund of any previously paid search fee and excess claims fee in the above-identified application.

The petition is granted.

The express abandonment is recognized. Any previously paid search fee and excess claims fee are hereby refunded.

Telephone inquiries should be directed to the Office of Data Management at (571) 272-4200.

Patent Publication Branch
Office of Data Management

FORM PET651G (Rev. 08/07)

UNITED STATES PATENT AND TRADEMARK OFFICE

Commissioner for Patents
United States Patent and Trademark Office
P.O. Box 1450
Alexandria, VA 22313-1450
www.uspto.gov

MAILED
JUN 09 2011
OFFICE OF PETITIONS

TROP, PRUNER & HU, P.C.
1616 S. VOSS ROAD, SUITE 750
HOUSTON TX 77057-2631

In re Application of	:	
Seeley et al.	:	DECISION REFUSING STATUS
Application No. 13/032,213	:	UNDER 37 CFR 1.47(a)
Filed: February 22, 2011	:	
Attorney Docket No. ONX.012US	:	

This is in response to the petition under 37 CFR 1.47(a), filed April 28, 2011.

The petition is dismissed.

Rule 47 applicant is given TWO MONTHS from the mailing date of this decision to reply, correcting the below-noted deficiencies. Any reply should be entitled "Request for Reconsideration of Petition Under 37 CFR 1.47(a)," and should only address the deficiencies noted below, except that the reply may include an oath or declaration executed by the non-signing inventor. **FAILURE TO RESPOND WILL RESULT IN ABANDONMENT OF THE APPLICATION.** Any extensions of time will be governed by 37 CFR 1.136(a).

A grantable petition under 37 CFR 1.47(a) requires: (1) proof that the non-signing inventor cannot be reached or refuses to sign the oath or declaration after having been presented with the application papers (specification, claims and drawings); (2) an acceptable oath or declaration in compliance with 35 U.S.C. §§ 115 and 116; (3) the petition fee; and (4) a statement of the last known address of the non-signing inventor. Applicant lacks item(s) (2) set forth above.

Pursuant to petitioner's request deposit account no. 20-1504 will be charged the $200.00 petition fee.

An oath or declaration for the patent application in compliance with 37 CFR 1.63 and 1.64 has not been presented. The declaration does not set forth the citizenship of the non-signing inventor. A new oath or declaration in compliance with 37 CFR 1.63 and 1.64 signed by the other co-inventors on behalf of themselves and on behalf of non-signing inventor Wozencraft is REQUIRED. See MPEP 409.03(a). All the co-inventors must sign the new declaration that lists Mr. Wozencraft's citizenship because they are attesting that this information is true to the best of their knowledge.

Further the declaration fails to meet the requirements of 37 CFR 1.63(c)(1). The mailing address, and the residence if an inventor lives at a location which is different from where the inventor customarily receives mail, of each inventor has not been provided for inventor Wozencraft.

Further correspondence with respect to this matter should be addressed as follows:

By mail: Mail Stop PETITIONS
Commissioner for Patents
Post Office Box 1450
Alexandria, VA 22313-1450

By hand: Customer Service Window
Mail Stop Petitions
Randolph Building
401 Dulany Street
Alexandria, VA 22314

By fax: (571) 273-8300
ATTN: Office of Petitions

Telephone inquiries should be directed to the undersigned at (571) 272-3215.

Charlema Grant
Attorney
Office of Petitions

UNITED STATES PATENT AND TRADEMARK OFFICE

Commissioner for Patents
United States Patent and Trademark Office
P.O. Box 1450
Alexandria, VA 22313-1450
www.uspto.gov

TROP, PRUNER & HU, P.C.
1616 S. VOSS ROAD, SUITE 750
HOUSTON TX 77057-2631

In re Application of Mark Seeley, Fletcher Derek Southard, Mike James Mewhort, Joseph Earl Robinson, Roger William Leikam, Jeff Wayne Stark, Brett A Bickerton, Jonathan C. Stupka, David Wilde and Cephas M. Wozencraft Application No. 13/032,213 Filed: February 22, 2011 Attorney Docket No. ONX.012US For: FLUIDIZED BED PYROCARBON COATING	DECISION GRANTING STATUS UNDER 37 CFR 1.47(a) MAILED SEP 02 2011 OFFICE OF PETITIONS

This is in response to the renewed petition under 37 CFR 1.47(a), filed July 26, 2011.

The petition is **GRANTED.**

Petitioner has shown that the non-signing inventor Wozencraft cannot be located to execute the application papers of the above-identified application.

The application and papers have been reviewed and found in compliance with 37 CFR 1.47(a). This application is hereby accorded Rule 1.47(a) status.

As provided in 37 CFR 1.47(c), this Office will forward notice of this application's filing to the non-signing inventor at the address given in the petition. Notice of the filing of this application will also be published in the Official Gazette.

This application is being referred to the Office of Patent Application processing for processing in the normal course of business.

Telephone inquiries regarding this decision should be directed to the undersigned at (571) 272-3215.

Charlema Grant
Petitions Attorney
Office of Petitions

UNITED STATES PATENT AND TRADEMARK OFFICE

COMMISSIONER FOR PATENTS
UNITED STATES PATENT AND TRADEMARK OFFICE
P.O. BOX 1450
ALEXANDRIA, VA 22313-1450
www.uspto.gov

MAILED
SEP 02 2011
OFFICE OF PETITIONS

Cephas M. Wozencraft
2411 Dormarion Lane
Austin, Texas 78703

In re Application of
Mark Seeley, Fletcher Derek Southard, Mike James Mewhort, Joseph Earl Robinson, Roger William Leikam, Jeff Wayne Stark, Brett A Bickerton, Jonathan C. Stupka, David Wilde and Cephas M. Wozencraft
Application No. 13/032,213
Filed: February 22, 2011
Attorney Docket No. ONX.012US
For: FLUIDIZED BED PYROCARBON COATING

Dear Sir:

You are named as a joint inventor in the above-identified United States patent application, filed under the provisions of 35 U.S.C. 116 (United States Code), and 37 CFR 1.47(a), Rules of Practice in Patent Cases. Should a patent be granted on the application you will be designated therein as a co-inventor.

As a named inventor you are entitled to inspect any paper in the file wrapper of the application, order copies of all or any part thereof (at a prepaid cost per 37 CFR 1.19) or make your position of record in the application. Alternatively, you may arrange to do any of the preceding through a registered patent attorney or agent presenting written authorization from you. If you care to join the application, counsel of record (see below) would presumably assist you. Joining the application would entail the filing of an appropriate oath or declaration by you pursuant to 37 CFR 1.63.

Telephone inquiries regarding this communication should be directed to the undersigned at (571) 272-3215. Requests for information regarding your application should be directed to the File Information Unit at (703) 308-2733. Information regarding how to pay for and order a copy of the application, or a specific paper in the application, should be directed to the Certification Division at (571) 272-3150 or 1 (800) 972-6382 (outside the Washington, DC area).

Charlema Grant
Petitions Attorney
Office of Petitions

cc: TROP, PRUNER & HU, P.C.
1616 S. VOSS ROAD, SUITE 750
HOUSTON TX 77057-2631

UNITED STATES PATENT AND TRADEMARK OFFICE

Commissioner for Patents
United States Patent and Trademark Office
P.O. Box 1450
Alexandria, VA 22313-1450
www.uspto.gov

MARSHALL, GERSTEIN & BORUN LLP
233 SOUTH WACKER DRIVE
6300 WILLIS TOWER
CHICAGO IL 60606-6357

MAILED
FEB 03 2012
OFFICE OF PETITIONS

In re Application of:	:	
BONDA, et al.	:	DECISION ON PETITION
Application No.: 13/032,215	:	TO MAKE SPECIAL UNDER
Filing Date: February 22, 2011	:	37 CFR 1.102(c)(1)
Attorney Docket No.: 27702/44886A	:	

This is a decision on the petition to make special under 37 CFR 1.102(c)(1), filed January 31, 2012, to make the above-identified application special based on applicant's age as set forth in M.P.E.P. § 708.02, Section IV.

The petition is **GRANTED**.

A grantable petition to make an application special under 37 CFR 1.102(c)(1) and MPEP § 708.02, Section IV: Applicant's Age must be accompanied by evidence showing that at least one of the applicants is 65 years of age, or more, such as a birth certificate or a statement by applicant. Applicant may also submit a statement from a registered practitioner that he or she has evidence that the applicant is 65 years of age or older. No fee is required

The instant petition includes a statement from the applicant, Craig A. Bonda, who signed a statement indicating that said applicant is 65 years of age or older as required under MPEP § 708.02. Accordingly, the above-identified application has been accorded "special" status.

Telephone inquiries concerning this decision should be directed to Brian W. Brown at (571) 272-5338.

All other inquiries concerning either the examination or status of the application should be directed to the Technology Center.

Brian W. Brown
Petitions Examiner
Office of Petitions

IN THE UNITED STATES PATENT AND TRADEMARK OFFICE

First Named Inventor: Allen Michael RITTER	)
Confirmation No.: 6655	)
	)
Serial No.: 13/032,322	)
	)
Filing Date: February 22, 2011	)
	)
Atty Docket No.: 161971-8	)

Commissioner for Patents
P.O. Box 1450
Alexandria, VA 22313-1450

Statement Concerning the Basis for the Special Status

SIR:

Applicant respectfully submits that Special Status is sought on the basis that the present invention materially contributes to the development of renewable energy resources or energy conservation.

The undersigned attorney may be contacted at the number below to facilitate the resolution of any matters. Please charge any fees that are incurred in connection with this Statement to deposit account no. 09-0470.

Respectfully submitted,

General Electric Company

By : /Douglas D. Zhang/
Douglas D. Zhang
Reg. No. 37,985

Dated: May 3, 2011

GE Global Patent Operation
2 Corporate Drive, Suite 648
Shelton, CT 06484
203-944-6755

Doc Code: PET.GREEN
Document Description: Petition for Green Tech Pilot

PTO/SB/420 (03-11)

PETITION TO MAKE SPECIAL UNDER THE GREEN TECHNOLOGY PILOT PROGRAM

Attorney Docket Number: 161971-8	Application Number (if known): 13/032,322	Filing date: February 22, 2011

First Named Inventor: Allen Michael RITTER

Title: APPARATUS FOR COUPLING AN ENERGY STORAGE SYSTEM TO A VARIABLE ENERGY SUPPLY SYSTEM

APPLICANT HEREBY REQUESTS TO PARTICIPATE IN THE GREEN TECHNOLOGY PILOT PROGRAM FOR THE ABOVE-IDENTIFIED APPLICATION. See Instruction Sheet on page 2.

This petition must be timely filed electronically using the USPTO electronic filing system, EFS-Web.

1. By filing this petition:

   Applicant is requesting early publication: Applicant hereby requests early publication under 37 CFR 1.219 and the publication fee set forth in 37 CFR 1.18(d) accompanies this request.

2. By filing this petition: applicant is agreeing to make an election without traverse in a telephonic interview and elect an invention that meets the eligibility requirements for the Green Technology Pilot Program, if the Office determines that the claims are not obviously directed to a single invention. See Instruction Sheet.

3. This request is accompanied by statements of special status for the eligibility requirement.

4. The application contains no more than three (3) independent claims and twenty (20) total claims.

5. The application does not contain any multiple dependent claims.

6. Other attachments: Statement Concerning the Basis for the Special Status

Signature /Douglas D. Zhang/	Date May 3, 2011
Name (Print/Typed) Douglas D. Zhang	Registration Number 37,985

Note: *Signatures of all the inventors or assignees of record of the entire interest or their representative(s) are required in accordance with 37 CFR 1.33 and 11.18. Please see 37 CFR 1.4(d) for the form of the signature. If necessary, submit multiple forms for more than one signature, see below*.*

☐ *Total of _____ forms are submitted.

If you need assistance in completing the form, call 1-800-PTO-9199 and select option 2.

Privacy Act Statement

The **Privacy Act of 1974 (P.L. 93-579)** requires that you be given certain information in connection with your submission of the attached form related to a patent application or patent. Accordingly, pursuant to the requirements of the Act, please be advised that: (1) the general authority for the collection of this information is 35 U.S.C. 2(b)(2); (2) furnishing of the information solicited is voluntary; and (3) the principal purpose for which the information is used by the U.S. Patent and Trademark Office is to process and/or examine your submission related to a patent application or patent. If you do not furnish the requested information, the U.S. Patent and Trademark Office may not be able to process and/or examine your submission, which may result in termination of proceedings or abandonment of the application or expiration of the patent.

The information provided by you in this form will be subject to the following routine uses:

1. The information on this form will be treated confidentially to the extent allowed under the Freedom of Information Act (5 U.S.C. 552) and the Privacy Act (5 U.S.C 552a). Records from this system of records may be disclosed to the Department of Justice to determine whether disclosure of these records is required by the Freedom of Information Act.
2. A record from this system of records may be disclosed, as a routine use, in the course of presenting evidence to a court, magistrate, or administrative tribunal, including disclosures to opposing counsel in the course of settlement negotiations.
3. A record in this system of records may be disclosed, as a routine use, to a Member of Congress submitting a request involving an individual, to whom the record pertains, when the individual has requested assistance from the Member with respect to the subject matter of the record.
4. A record in this system of records may be disclosed, as a routine use, to a contractor of the Agency having need for the information in order to perform a contract. Recipients of information shall be required to comply with the requirements of the Privacy Act of 1974, as amended, pursuant to 5 U.S.C. 552a(m).
5. A record related to an International Application filed under the Patent Cooperation Treaty in this system of records may be disclosed, as a routine use, to the International Bureau of the World Intellectual Property Organization, pursuant to the Patent Cooperation Treaty.
6. A record in this system of records may be disclosed, as a routine use, to another federal agency for purposes of National Security review (35 U.S.C. 181) and for review pursuant to the Atomic Energy Act (42 U.S.C. 218(c)).
7. A record from this system of records may be disclosed, as a routine use, to the Administrator, General Services, or his/her designee, during an inspection of records conducted by GSA as part of that agency's responsibility to recommend improvements in records management practices and programs, under authority of 44 U.S.C. 2904 and 2906. Such disclosure shall be made in accordance with the GSA regulations governing inspection of records for this purpose, and any other relevant (*i.e.*, GSA or Commerce) directive. Such disclosure shall not be used to make determinations about individuals.
8. A record from this system of records may be disclosed, as a routine use, to the public after either publication of the application pursuant to 35 U.S.C. 122(b) or issuance of a patent pursuant to 35 U.S.C. 151. Further, a record may be disclosed, subject to the limitations of 37 CFR 1.14, as a routine use, to the public if the record was filed in an application which became abandoned or in which the proceedings were terminated and which application is referenced by either a published application, an application open to public inspection or an issued patent.
9. A record from this system of records may be disclosed, as a routine use, to a Federal, State, or local law enforcement agency, if the USPTO becomes aware of a violation or potential violation of law or regulation.

UNITED STATES PATENT AND TRADEMARK OFFICE

UNITED STATES DEPARTMENT OF COMMERCE
United States Patent and Trademark Office
Address: COMMISSIONER FOR PATENTS
P.O. Box 1450
Alexandria, Virginia 22313-1450
www.uspto.gov

APPLICATION NO.	FILING DATE	FIRST NAMED INVENTOR	ATTORNEY DOCKET NO.	CONFIRMATION NO.
13/032,322	02/22/2011	Allen Michael Ritter	161971-8 (22402-273)	6655

45432 7590 05/26/2011
PATRICK W. RASCHE (22402)
ARMSTRONG TEASDALE LLP
7700 Forsyth Boulevard
Suite 1800
St. Louis, MO 63105

EXAMINER

ART UNIT	PAPER NUMBER
2838	

NOTIFICATION DATE	DELIVERY MODE
05/26/2011	ELECTRONIC

Please find below and/or attached an Office communication concerning this application or proceeding.

The time period for reply, if any, is set in the attached communication.

Notice of the Office communication was sent electronically on above-indicated "Notification Date" to the following e-mail address(es):

USpatents@armstrongteasdale.com

UNITED STATES PATENT AND TRADEMARK OFFICE

Commissioner for Patents
United States Patent and Trademark Office
P.O. Box 1450
Alexandria, VA 22313-1450
www.uspto.gov

PATRICK W. RASCHE (22402)
ARMSTRONG TEASDALE LLP
7700 Forsyth Boulevard
Suite 1800
St. Louis MO 63105

In re Application of	:	
RITTER et al.	:	DECISION ON PETITION
Application No. 13/032,322	:	TO MAKE SPECIAL UNDER
Filed: February 22, 2011	:	THE GREEN TECHNOLOGY
Attorney Docket No. 161971-8 (22402-273)	:	PILOT PROGRAM

This is a decision on the petition under 37 CFR 1.102, filed on May 04, 2011, to make the above-identified application special under the pilot program for applications pertaining to Green Technologies as set forth 74 Federal Register Notice 64666 (December 8, 2009) and amended by 75 Federal Register Notice 28554 (May 21, 2010) and 75 Federal Register Notice 69049 (November 10, 2010).

The petition is **GRANTED**.

A grantable petition to make an application special under 37 CFR 1.102 and the pilot program as set forth in 74 FR 64666 must be directed to a nonprovisional application filed under 35 USC 111(a) or be a national stage entry under 35 USC 371, exclusive of any reissue applications.

In order to qualify for special status, the following requirements must be met. 1) The application must have no more than 3 independent claims and no more than 20 total claims. 2) The application must not contain any multiple dependent claims. 3) The petition must state the basis for seeking special status, i.e., the claimed invention either: A) materially enhances the quality of the environment or B) materially contributes to: i) the discovery or development of renewable energy resources, ii) the more efficient utilization and conservation of energy resources, or iii) greenhouse gas emission reduction. 4) If the disclosure is not clear on its face that the claimed invention materially contributes under category (A) or (B), the petition must be accompanied by a statement by the applicant, assignee, or an attorney/agent registered to practice before the Office explaining how the materiality standard is met. 5) A statement that applicant will agree to make an election without traverse in a telephonic interview if a restriction requirement is made by the examiner. 6) The petition to make special must be filed electronically. 7) The petition must be filed at least one day prior to the date that a first Office Action appears in the Patent Application Information Retrieval (PAIR) system. 8) The petition must be accompanied by a request for early publication in compliance with 37 CFR 1.219 and include the publication fee as set forth in 37 CFR 1.18(d).

The requirement for a fee for consideration of the petition to make special for applications pertaining to Green Technologies has been waived.

The instant petition complies with items 1 – 8 above. Accordingly, the above-identified application has been accorded "special" status.

Telephone inquires concerning this decision should be directed to Lee W. Young at 571-272-4549.

The application is being forwarded to the Technology Center Art Unit 2838 for action on the merits commensurate with this decision.

Lee W. Young
Quality Assurance Specialist
Technology Center 2800

UNITED STATES PATENT AND TRADEMARK OFFICE

Commissioner for Patents
United States Patent and Trademark Office
P.O. Box 1450
Alexandria, VA 22313-1450
www.uspto.gov

BCF LLP
1100 RENE-LEVESQUE BLVD. WEST
25TH FLOOR
MONTREAL QC H3B-5C9 CA CANADA

MAILED

NOV 08 2011

OFFICE OF PETITIONS

In re Application of :
Denis Mercier et al. :
Application No. 13/032,325 : ON PETITION
Filed: February 22, 2011 :
Attorney Docket No. 15367~010 :

This is a decision on the petition, filed October 20, 2011 under 37 CFR 1.137(b)[1], to revive the above-identified application.

The petition is **GRANTED**.

A response to a Notice to File Missing Parts mailed March 9, 2011 was filed September 30, 2011 with a five month extension of time request. However, a Notice of Incomplete Reply was mailed October 14, 2011 advising that the response filed September 30, 2011 was incomplete and that the period of reply remained as set forth in the March 9, 2011 notice and that extensions of time pursuant to 37 CFR 1.136, accompanied by the appropriate fee (37 CFR 1.17(a)) were allowable. On even date, the Notice of Abandonment was also mailed.

The filing of the response to the Notice to File Missing Parts mailed March 9, 2011 is acknowledged.

All other requirements having been met, this matter is being referred to the Office of Patent Application Processing for further pre-examination processing.

Telephone inquiries concerning this matter may be directed to the undersigned Petitions Attorney at (571) 272-3212.

Patricia Faison-Ball

Patricia Faison-Ball
Senior Petitions Attorney
Office of Petitions

---

[1]A grantable petition to revive an abandoned application under 37 CFR 1.137(b) must be accompanied by:

(1) the required reply (unless previously filed), which may be met by the filing of a continuing application in a nonprovisional application abandoned for failure to prosecute, but must be the payment of the issue fee or any outstanding balance thereof in an application or patent, abandoned or lapsed for failure to pay the issue fee or any portion thereof;
(2) the petition fee required by 37 CFR 1.17(l);
(3) a statement that the entire delay in filing the required reply from the due date for the reply until the filing of a grantable petition pursuant to 37 CFR 1.137(b) was unintentional. The Director may require additional information where there is a question whether the delay was unintentional; and
(4) a terminal disclaimer (and fee as set forth in 37 CFR 1.20(d)) in a design application, a utility application filed before June 8, 1995, or a plant application filed before June 8, 1995.

UNITED STATES PATENT AND TRADEMARK OFFICE

UNITED STATES DEPARTMENT OF COMMERCE
United States Patent and Trademark Office
Address: COMMISSIONER FOR PATENTS
P.O. Box 1450
Alexandria, Virginia 22313-1450
www.uspto.gov

APPLICATION NO.	FILING DATE	FIRST NAMED INVENTOR	ATTORNEY DOCKET NO.	CONFIRMATION NO.
13/032,393	02/22/2011	Theodore J. Myers	091721-0135	6782

23524 7590 04/01/2011
FOLEY & LARDNER LLP
150 EAST GILMAN STREET
P.O. BOX 1497
MADISON, WI 53701-1497

EXAMINER
GAFFIN, JEFFREY A

ART UNIT	PAPER NUMBER
2117	

MAIL DATE	DELIVERY MODE
04/01/2011	PAPER

Please find below and/or attached an Office communication concerning this application or proceeding.

The time period for reply, if any, is set in the attached communication.

UNITED STATES PATENT AND TRADEMARK OFFICE

Commissioner for Patents
United States Patent and Trademark Office
P.O. Box 1450
Alexandria, VA 22313-1450
www.uspto.gov

FOLEY & LARDNER LLP
150 EAST GILMAN STREET
P.O. BOX 1497
MADISON, WI 53701-1497

In re Application of: MYERS, et al. Serial No.: 13/032,393 Filed: February 22, 2011 Docket: 091721-0135 Title: ERROR DETECTION SYSTEM	DECISION ON PETITION TO MAKE SPECIAL FOR NEW APPLICATION UNDER 37 C.F.R. § 1.102 & M.P.E.P. § 708.02

This is a decision on the petition filed on February 22, 2011 to make the above-identified application special for accelerated examination procedure under 37 C.F.R. § 1.102(d).

The petition to make the application special is **DISMISSED**.

REGULATION AND PRACTICE

A grantable petition to make special under 37 C.F.R. § 1.102(d) and pursuant to the "Change to Practice for Petitions in Patent Applications to Make Special and for Accelerated Examination" published in the Federal Register on June 26, 2006 (71 Fed. Reg. 36323), must satisfy the following conditions:

I. Conditions Regarding the Application:

1. the application must be a non-reissue utility or design application filed under 37 CFR 1.111(a);

2. the application, the petition and the required fees must be filed electronically using the USPTO's electronic filing system (EFS), or EFS-web; if not filed electronically, a statement asserting that EFS and EFS-web were not available during the normal business hours.

3. at the time of filing, the application must be complete under 37 CFR 1.51 and in condition for examination;

4. the application must contain three or fewer independent claims and twenty or fewer total claims and the claims must be directed to a single invention.

II. Conditions Regarding the Petition:

The petition must:

1. be filed with the application;

2. include a statement that applicant agrees that the dependent claims will be grouped together with and not to separately argue the patentability of any independent claim from which they depend during any appeal in the application;

3. include a statement that applicant agrees to make an election without traverse in a telephone interview.

4. include a statement that applicant agrees to conduct such an interview when requested by the examiner.

5. include a statement, made based on a good faith belief, that a preexamination search in compliance with the following requirements, was conducted, including an identification of the field of search by United States class and subclass, where applicable, and for database searches, the search logic or chemical structure or sequence used as a query, the name of the file(s) searched and the database service, and the date of the search.

The preexamination search must:

5.1 involve U.S. patents and patent application publications, foreign patent documents, and non-patent literature, unless the applicant can justify with reasonable certainty that no references more pertinent than those already identified are likely to be found in the eliminated sources and includes such a justification with this statement;

5.2. be directed to the claimed invention and encompass all of the features of the claims, giving the claims the broadest reasonable expectation;

5.3. encompass the disclosed features that may be claimed.

6. must provide in support of the petition an accelerated examination support document. An accelerated examination support document must include:

6.1. an information disclosure statement (IDS) in compliance with 37 CFR 1.98 citing each reference deemed most closely related to the subject matter of each of the claims;

6.2. an identification of all the limitations in the claims that are disclosed by the reference specifying where the limitation is disclosed in the cited reference;

6.3. a detailed explanation of how each of the claims are patentable over the references cited with particularity required by 37 CFR 1.111(b) and (c);

6.4. a concise statement of the utility of the invention as defined in each of the independent claims (unless the application is a design application);

6.5. a showing of where each limitation of the claims finds support under 35 USC 112, first paragraph, in the written description of the specification. If applicable, the showing must also identify: (1) each means- (or step) plus-function claim element that invokes consideration under 35 USC 112, sixth paragraph; and (2) the structure, material, or acts in the specification that corresponds to each means- (or step) plus-function claim element that invokes consideration under 35 USC 112, sixth paragraph; if the application claims the benefit of one or more applications under title 35, United States Code, the showing must also include where each limitation of the claims finds support under 35 USC 112, first paragraph, in each such application in which such supports exists;

6.6. an identification of any cited references that may be disqualified under 35 USC 103(c).

REVIEW OF FACTS

The conditions I. 1-4 & II. 1-5.1, 6.1, 6.2, 6.5 & 6.6 above are considered to have been met. However, the petition fails to comply with conditions II. 5.1, 6.3 & 6.4 above. Therefore, the petition fails to meet the required conditions to be accorded special status under the accelerated examination procedure.

Regarding the requirement of MPEP § 708.02(a)(I.)(H)[1](1) and item 5.1 above, the preexam search must be directed to the (instant) claimed invention and encompass all of the disclosed features of the (instant) claims.

Specifically and with respect to items 5.1 above, although it appears from the AE Search Document that the search did include a search of foreign patent documents and non-patent literature, Petitioner should positively state that such is the case.

With regard to the requirement of MPEP § 708.02(a)(I.)(I)(3) and item 6.3 above, 37 CFR § 1.111 (c) states in part "the applicant or patent owner must clearly point out the patentable novelty which he or she thinks the claims present in view of the state of the art disclosed by the references cited or the objections made." Petitioner should ensure that the above discussion is directed to how the language of (each of) the claim(s) specifically distinguishable and patentable from each of the references provided in requirement (6.1) above. In particular, as recited in section IV. Detailed Explanation of Patentability, found on page 8 of the instant petition, there does ***not*** appear to be a direct discussion as to how the claims are patentable over the cited references with respect to 35 USC 102 (novelty), i.e. **references taken alone**. There does however appear to be a discussion as to how the claims are patentable over the cited references with respect to the combination of references under 35 USC 103. For this reason, the petition does not meet the requirement of MPEP § 708.02(a)(I.)(I)(3).

With regard to the requirement of MPEP § 708.02(a)(I.)(I)(4) and item 6.4 above, the concise statement of the utility ***must be of the invention as defined in (each of) the independent claim(s)*** i.e. reference is made to the "method of improving error detection ..." as recited in claim 1, the "node comprising ...." as recited in claim 10, and the "system comprising ..." as recited in claim 17. Note, contrary to that stated in section V on page 10 of the instant petition, the referenced "nodes may verify that incoming signals ..." and "receiver can determine" are not found in pending independent claims 1, 10 and 17.

Thus, the petition does not meet the conditions II. 5.1, 6.3 and 6.4 above.

DECISION

For the above-stated reasons, the petition is **DISMISSED**. The application will therefore be taken up by the examiner for action in its regular turn.

[1] MPEP 8th ed. rev 5 August 2006

Petitioner is given ***a single opportunity*** to perfect the petition. Any request for reconsideration of this decision must be submitted within 1 (one) month or 30 (thirty) days, whichever is longer, (no extension of time under 37 CFR 1.136(a) is permitted) from the date of this decision in order to be considered timely. Any request for reconsideration ***must fully address all of the deficiencies indicated above***. [emphasis added]

Petitioner is reminded that, upon granting of the special status of the application on request for reconsideration, the application will be processed expeditiously. However, due to the dismissal of the instant petition, examination may not be completed within twelve months of the filing date of the application.

Any inquiry regarding this decision should be directed to Brian Johnson, Quality Assurance Specialist, at (571) 272-3595. If attempts to reach the undersigned by telephone are unsuccessful, Kakali Chaki, Quality Assurance Specialist, can be reached at (571) 272-3719.

Brian L. Johnson
Quality Assurance Specialist, WG 2110
Technology Center 2100

UNITED STATES PATENT AND TRADEMARK OFFICE

UNITED STATES DEPARTMENT OF COMMERCE
United States Patent and Trademark Office
Address: COMMISSIONER FOR PATENTS
P.O. Box 1450
Alexandria, Virginia 22313-1450
www.uspto.gov

APPLICATION NO.	FILING DATE	FIRST NAMED INVENTOR	ATTORNEY DOCKET NO.	CONFIRMATION NO.
13/032,393	02/22/2011	Theodore J. Myers	091721-0135	6782

23524 7590 05/18/2011
FOLEY & LARDNER LLP
150 EAST GILMAN STREET
P.O. BOX 1497
MADISON, WI 53701-1497

EXAMINER
GAFFIN, JEFFREY A

ART UNIT	PAPER NUMBER
2117	

MAIL DATE	DELIVERY MODE
05/18/2011	PAPER

Please find below and/or attached an Office communication concerning this application or proceeding.

The time period for reply, if any, is set in the attached communication.

UNITED STATES PATENT AND TRADEMARK OFFICE

Commissioner for Patents
United States Patent and Trademark Office
P.O. Box 1450
Alexandria, VA 22313-1450
www.uspto.gov

FOLEY & LARDNER LLP
150 EAST GILMAN STREET
P.O. BOX 1497
MADISON, WI 53701-1497

In re Application of: **MYERS,** et al. Serial No.: 13/032,393 Filed: February 22, 2011 Docket: 091721-0135 Title: **ERROR DETECTION SYSTEM**	DECISION ON PETITION TO MAKE SPECIAL FOR NEW APPLICATION UNDER 37 C.F.R. § 1.102 & M.P.E.P. § 708.02

This is a decision on the renewed petition filed on April 29, 2011 to make the above-identified application special for accelerated examination procedure under 37 C.F.R. § 1.102(d).

The original petition, submitted on February 22, 2011 was dismissed in the decision mailed on April 01, 2011.

The petition to make the application special is **GRANTED**. Note, the "Concise Statement of Utility" found on page 10 of the Amended AE Support Document, although not stated, is taken to be directed to currently pending independent claims 1, 10, and 17.

The application is eligible for accelerated examination and the petition complies with the conditions for granting the application special status pursuant to the "Change to Practice for Petitions in Patent Applications to Make Special and for Accelerated Examination" published June 26, 2006, in the Federal Register. (71 Fed. Reg. 36323).

The prosecution of the instant application will be conducted expeditiously according to the following guidelines.

1. The application will be docketed to an examiner and taken up for action within two weeks of the date of this decision.

2. Restriction Practice:

If the examiner determines that the claims are not directed to a single invention, a telephone request to elect one single invention will be made pursuant to MPEP 812.01. As a prerequisite to the grant of this petition, the applicant has agreed to make an oral election, by telephone, without traverse. If the applicant refuses to make an election without traverse, or the examiner cannot reach the applicant after a reasonable effort, the examiner will treat the first claimed invention

(invention defined by claim 1) as having being constructively elected without traverse for examination.

3. Office action:
   If it is determined that, after appropriate consultation, there is a potential rejection or any other issue to be addressed, the examiner will telephone the applicant and arrange an interview to discuss and resolve the issue. An Office action, other than a Notice of Allowance and Fee(s) Due (Notice of Allowance), will not be issued unless either: 1) an interview was conducted but did not result in agreed to action that places the application in condition for allowance, or, 2) a determination is made that an interview would be unlikely to result in the application being placed in condition for allowance, and 3) an internal conference has been held to review any rejection of any claim.

4. Time for Reply:
   An Office action other than a Notice of Allowance or a final Office action will set a shortened statutory period of one month or thirty days, whichever is longer, for reply with no extension of time available under 37 CFR 1.136(a). Failure to timely file a reply within this non-extendible period for reply will result in the abandonment of the application.

5. Reply by Applicant:
   A timely reply to an Office action other than the Notice of Allowance must be submitted electronically via EFS or EFS-web and limited to addressing the rejections, objections and requirement made. Any amendment that attempts to: 1) add claims which would result in more than three pending independent claims or more than twenty pending total claims; 2) present claims not encompassed by the pre-examination search or an updated accelerated examination support document; or 3) present claims that are directed a non-elected invention or an invention other than that previously claimed and examined in the application, will be treated as not fully responsive and will not be entered.

   For any amendment to the claims (including any new claim) that is not encompassed by the accelerated examination support document, applicant must provide an updated accelerated examination support document that encompasses the amended or new claims at the time of filing of the amendment.

   To proceed expeditiously with the examination, it is recommended that a reply with amendments made to any claim or with any new claim being added be accompanied by an updated accelerated examination support document or a statement explaining how the amended or new claim is supported by the original accelerated examination support document.

6. Information Disclosure Statement (IDS):
   Any IDS filed during prosecution must be submitted electronically via EFS or EFS-web, accompanied by an updated accelerated examination support document, and be in compliance with 37 CFR 1.97 and 1.98.

7. Post-Allowance Processing:
   To expedite processing of the allowed application into a patent, the applicant must: 1) pay the required fees within one month of the date of the Notice of Allowance, and 2) not file any post allowance papers not required by the Office. In no event may the issue fee be paid and accepted later than three months from the date of the Notice of Allowance.

8. After-Final and Appeal Procedures:
   To expedite prosecution, after receiving the final Office action, applicant must: 1) promptly file a notice of appeal, an appeal brief and appeal fees; and 2) not request a pre-appeal brief conference.

   Any amendment, affidavit or other evidence filed after final Office action must comply with applicable rules and the requirements outlined in numbered paragraphs 5 and 6 above.

   On appeal, the application will proceed according to normal appeal procedures. After appeal, the application will again be treated special.

9. Proceedings Outside the Normal Examination Process:
   If the application becomes involved in a proceeding that is outside the normal examination process (e.g., a secrecy order, national security review, interference proceeding, petitions under 37 CFR 1.181, 182 or 183), the application will be treated special before and after such proceeding.

10. Final Disposition:
    The twelve-month goal of this accelerated examination procedure ends with a final disposition. The mailing of a final Office action, a Notice of Allowance, the filing of a Notice of Appeal, or the filing of a Request for Continued Examination (RCE) is the final disposition.

If, during prosecution, a paper is not filed electronically using EFS-web, a reply is filed but is not fully responsive, the application is involved in an appeal, or a proceeding outside normal examination process, the application will still be examined expeditiously, however, the final disposition may occur more than twelve months from the filing of the application. In addition, Applicant is reminded that due to the dismissal of the previous petition submission, examination may not be completed within twelve months of the filing date of the application.

Any inquiry regarding this decision should be directed to Brian Johnson, Quality Assurance Specialist, at (571) 272-3595. If attempts to reach the undersigned by telephone are unsuccessful, Kakali Chaki, Quality Assurance Specialist, can be reached at (571) 272-3719.

Brian Johnson, Quality Assurance Specialist
Technology Center 2100

IN THE UNITED STATES PATENT AND TRADEMARK OFFICE

In re application of:	Confirmation No.: 6854
ROGERS *et al.*	Art Unit: 3745
Appl. No.: 13/032,431	Examiner: To be assigned
Filed: February 22, 2011	Atty. Docket: 2995.0100001
For: **INDEPENDENT BLADE PITCH CONTROL**	

Statement of Special Status with Petition to Make Special Under the Green Technology Pilot Program

Commissioner for Patents
PO Box 1450
Alexandria, VA 22313-1450

Sir:

A Petition to Make Special Under the Green Technology Pilot Program, together with the requisite publication fee, is submitted herewith.

Basis for Special Status

Special status is sought for this application because at least one embodiment materially contributes to the development of renewable energy resources and the more efficient utilization of those resources, such as wind power generation.

Statement Pertaining to the Materiality Standard

At least one embodiment of the present invention materially contributes to the development of wind energy resources through increasing the generation of electrical power from wind, as well as doing so in a more cost effective manner. This is possible through wind mapping and pitch control. Sensors, such as laser Doppler velocimeters, are useful to map the wind at multiple locations at a wind farm and near the blades of a turbine. Through the continuous measuring of three-dimensional wind maps and correlation of the wind maps to appropriate control signals, the pitch of individual blades

and/or the pitch of individual sections along a blade may be adjusted. Such dynamic adjustment allows for increased power generation per turbine, with smaller wind turbines.

Coincident with the development of wind energy resources, the embodiment also more efficiently utilizes these energy resources. Efficiency is increased because the embodiment enables an equipped turbine to dynamically respond to varying wind conditions by adjusting the pitch of the blades and/or individual sections along the blades. For example, a substantial increase in clean wind energy can be generated from smaller and less costly turbines, e.g., 1-2 MW turbines. These relatively smaller turbines can produce energy that currently is only generated using more costly and larger turbines, e.g., 4 MW turbines. This can reduce the footprint of a wind farm. Further, a life of a turbine can be substantially increased due to more effectively managing fatigue life of the turbine by reducing stresses caused by not knowing what inflowing wind looks like. This, in turn, also can substantially reduce downtime and maintenance costs of individual turbines or an entire wind farm.

Conclusion

Special status should be accorded this application because the embodiment materially contributes to the development of wind energy resources, as well as to the more efficient utilization of wind energy resources.

Respectfully submitted,

STERNE, KESSLER, GOLDSTEIN & FOX P.L.L.C.

Jason D. Eisenberg
Attorney for Applicants
Registration No. 43,447

Date: April 22, 2011

1100 New York Avenue, N.W.
Washington, D.C. 20005-3934
(202) 371-2600

1328684_1.doc

Doc Code: PET.GREEN
Document Description: Petition for Green Tech Pilot

PTO/SB/420 (05-10)
Approved for use through 01/31/2011. OMB 0651-0062
U.S. Patent and Trademark Office; U. S. DEPARTMENT OF COMMERCE
Under the Paperwork Reduction Act of 1995, no persons are required to respond to a collection of information unless it displays a valid OMB control number.

PETITION TO MAKE SPECIAL UNDER THE GREEN TECHNOLOGY PILOT PROGRAM

Attorney Docket Number: 2995.0100001	Application Number (if known): 13/032,431	Filing date: February 22, 2011

First Named Inventor: Philip L. ROGERS

Title: INDEPENDENT BLADE PITCH CONTROL

APPLICANT HEREBY REQUESTS TO PARTICIPATE IN THE GREEN TECHNOLOGY PILOT PROGRAM FOR THE ABOVE-IDENTIFIED APPLICATION. See Instruction Sheet on page 2.

This petition must be timely filed electronically using the USPTO electronic filing system, EFS-Web.

1. By filing this petition:

   Applicant is requesting early publication: Applicant hereby requests early publication under 37 CFR 1.219 and the publication fee set forth in 37 CFR 1.18(d) accompanies this request.

2. By filing this petition: applicant is agreeing to make an election without traverse in a telephonic interview and elect an invention that meets the eligibility requirements set forth in the notice titled "Pilot Program for Green Technologies Including Greenhouse Gas Reduction," as modified by the notice titled "Elimination of Classification Requirement in the Green Technology Pilot Program," each of which was published in the Federal Register, if the Office determines that the claims are not obviously directed to a single invention.

3. This request is accompanied by statements of special status for the eligibility requirement.

4. The application contains no more than three (3) independent claims and twenty (20) total claims.

5. The application does not contain any multiple dependent claims.

6. Other attachments: _____

Signature	Date April 22, 2011
Name (Print/Typed) Jason D. Eisenberg	Registration Number 43,447

Note: *Signatures of all the inventors or assignees of record of the entire interest or their representative(s) are required in accordance with 37 CFR 1.33 and 11.18. Please see 37 CFR 1.4(d) for the form of the signature. If necessary, submit multiple forms for more than one signature, see below*.*

[X] *Total of 1 forms are submitted.

The information is required to obtain or retain a benefit by the public which is to file (and by the USPTO to process) an application. Confidentiality is governed by 35 U.S.C. 122 and 37 CFR 1.11 and 1.14. This collection is estimated to take 1 hour to complete, including gathering, preparing, and submitting the completed application form to the USPTO. Time will vary depending upon the individual case. Any comments on the amount of time you require to complete this form and/or suggestions for reducing this burden, should be sent to the Chief Information Officer, U.S. Patent and Trademark Office, U.S. Department of Commerce, P.O. Box 1450, Alexandria, VA 22313-1450. DO NOT SEND FEES OR COMPLETED FORMS TO THIS ADDRESS. **SEND TO: Commissioner for Patents, P.O. Box 1450, Alexandria, VA 22313-1450.**

If you need assistance in completing the form, call 1-800-PTO-9199 and select option 2.

1,328,629

UNITED STATES PATENT AND TRADEMARK OFFICE

UNITED STATES DEPARTMENT OF COMMERCE
United States Patent and Trademark Office
Address: COMMISSIONER FOR PATENTS
P.O. Box 1450
Alexandria, Virginia 22313-1450
www.uspto.gov

APPLICATION NO.	FILING DATE	FIRST NAMED INVENTOR	ATTORNEY DOCKET NO.	CONFIRMATION NO.
13/032,431	02/22/2011	Philip L. Rogers	2995.0100001	6854

26111 7590 12/07/2011
STERNE, KESSLER, GOLDSTEIN & FOX P.L.L.C.
1100 NEW YORK AVENUE, N.W.
WASHINGTON, DC 20005

EXAMINER

ART UNIT	PAPER NUMBER
3745	

MAIL DATE	DELIVERY MODE
12/07/2011	PAPER

Please find below and/or attached an Office communication concerning this application or proceeding.

The time period for reply, if any, is set in the attached communication.

UNITED STATES PATENT AND TRADEMARK OFFICE

Commissioner for Patents
United States Patent and Trademark Office
P.O. Box 1450
Alexandria, VA 22313-1450
www.uspto.gov

STERNE, KESSLER, GOLDSTEIN & FOX P.L.L.C.
1100 NEW YORK AVENUE, N.W.
WASHINGTON DC 20005

In re Application of	:	
ROGERS, PHILIP L. et al	:	DECISION ON PETITION
Application No. 13/032,431	:	TO MAKE SPECIAL UNDER
Filed: February 22, 2011	:	THE GREEN TECHNOLOGY
Attorney Docket No. 2995.0100001	:	PILOT PROGRAM

This is a decision on the petition under 37 CFR 1.102, filed April 22, 2011, to make the above-identified application special under the pilot program for applications pertaining to Green Technologies as set forth in 74 Federal Register Notice 64666 (December 8, 2009) and amended by 75 Federal Register Notice 28554 (May 21, 2010) and 75 Federal Register Notice 69049 (November 10, 2010).

The petition is **granted**.

A grantable petition to make an application special under 37 CFR 1.102 and the pilot program as set forth in 74 FR 64666 must be directed to a nonprovisional application filed under 35 USC 111(a) or be a national stage entry under 35 USC 371, exclusive of any reissue applications.

If reconsideration of this decision is desired, a petition for reconsideration must be filed within ONE (1) MONTH OR THIRTY (30) DAYS from the mail date of this decision, whichever is longer. No extension of this time limit can be granted under 37 CFR 1.136(a) or (b). The petition for reconsideration should include an exhaustive attempt to provide the lacking item(s) noted below, since, after a decision on the petition for reconsideration, no further reconsideration or review of the matter will be undertaken by the Director.

In order to qualify for special status, the following requirements must be met. 1) The application must have no more than 3 independent claims and no more than 20 total claims. 2) The application must not contain any multiple dependent claims. 3) The petition must state the basis for seeking special status, i.e., the claimed invention either: A) materially enhances the quality of the environment or B) materially contributes to: i) the discovery or development of renewable energy resources, ii) the more efficient utilization and conservation of energy resources, or iii) greenhouse gas emission reduction. 4) If the disclosure is not clear on its face that the claimed invention materially contributes under category (A) or (B), the petition must be accompanied by

a statement by the applicant, assignee, or an attorney/agent registered to practice before the Office explaining how the materiality standard is met. 5) A statement that applicant will agree to make an election without traverse in a telephonic interview if a restriction requirement is made by the examiner. 6) The petition to make special must be filed electronically. 7) The petition must be filed at least one day prior to the date that a first Office Action appears in the Patent Application Information Retrieval (PAIR) system. 8) The petition must be accompanied by a request for early publication in compliance with 37 CFR 1.219 and include the publication fee as set forth in 37 CFR 1.18(d).

The requirement for a fee for consideration of the petition to make special for applications pertaining to Green Technologies has been waived.

The instant petition complies with items 1 – 8 above. Accordingly, the above-identified application has been accorded "special" status.

Telephone inquires concerning this decision should be directed to Henry C. Yuen at 571-272-4856.

This application will be forwarded to the Technology Center Art Unit 3745 for action on the merits commensurate with this decision.

/Henry C. Yuen/

Henry C. Yuen
Quality Assurance Specialist
Technology Center TC 3700

Doc Code: PET.GREEN
Document Description: Petition for Green Tech Pilot

PTO/SB/420 (03-11)

PETITION TO MAKE SPECIAL UNDER THE GREEN TECHNOLOGY PILOT PROGRAM

Attorney Docket Number: ASOK0001	Application Number (if known): 13/032,454	Filing date: February 22, 2011
First Named Inventor: Mingyao XIA		
Title: METHOD AND APPARATUS FOR USING PLC-BASED SENSOR UNITS FOR COMMUNICATION AND STREAMING MEDIA DELIVERY, AND FOR MONITORING AND CONTROL OF POWER USAGE OF CONNECTED APPLIANCES		

APPLICANT HEREBY REQUESTS TO PARTICIPATE IN THE GREEN TECHNOLOGY PILOT PROGRAM FOR THE ABOVE-IDENTIFIED APPLICATION. See Instruction Sheet on page 2.

This petition must be timely filed electronically using the USPTO electronic filing system, EFS-Web.

1. By filing this petition:

   Applicant is requesting early publication: Applicant hereby requests early publication under 37 CFR 1.219 and the publication fee set forth in 37 CFR 1.18(d) accompanies this request.

2. By filing this petition: applicant is agreeing to make an election without traverse in a telephonic interview and elect an invention that meets the eligibility requirements for the Green Technology Pilot Program, if the Office determines that the claims are not obviously directed to a single invention. See Instruction Sheet.

3. This request is accompanied by statements of special status for the eligibility requirement.

4. The application contains no more than three (3) independent claims and twenty (20) total claims.

5. The application does not contain any multiple dependent claims.

6. Other attachments: Preliminary Amendment

Signature /MAG/	Date November 22, 2011
Name (Print/Typed) Michael A. Glenn	Registration Number 30176

***Note**: Signatures of all the inventors or assignees of record of the entire interest or their representative(s) are required in accordance with 37 CFR 1.33 and 11.18. Please see 37 CFR 1.4(d) for the form of the signature. If necessary, submit multiple forms for more than one signature, see below*.*

☐ *Total of 1 forms are submitted.

If you need assistance in completing the form, call 1-800-PTO-9199 and select option 2.

IN THE UNITED STATES PATENT AND TRADEMARK OFFICE

First Named Inventor	:	Mingyao XIA
Serial No.	:	13/032,454
Filed	:	February 22, 2011
Art Unit	:	2121
Confirmation Number	:	6910
Examiner	:	Albert Decady
Title	:	METHOD AND APPARATUS FOR USING PLC-BASED SENSOR UNITS FOR COMMUNICATION AND STREAMING MEDIA DELIVERY, AND FOR MONITORING AND CONTROL OF POWER USAGE OF CONNECTED APPLIANCES
Attorney Docket No.	:	ASOK0001

November 22, 2011

Commissioner for Patents
P.O. Box 1450
Alexandria, VA 22313-1450

STATEMENT OF SPECIAL STATUS

Applicant requests Special Status in connection with the Green Technology Pilot Program on the basis of the energy conservation afforded by the invention claimed in the subject application.

While Applicant considers this aspect of the invention for which patent protection is sought to be clear on the face of the application disclosure, Applicant nonetheless provides the following statement pertaining to the materiality standard in connection with such request for Special Status. That is, the invention reduces the carbon foot print of in-home equipment by appropriate use of devices for power monitoring, data collection, and control and communication of said equipment over power lines. Implementation of

green technologies requires monitoring and control of the carbon footprint of homes and offices and has created a need to assess the power usage pattern and the magnitude of usage remotely, and to supervise and control the power remotely. It is necessary to monitor and control the power use on a micro level for the consumer, who can exercise the necessary constraints on use if the proper tools are provided. It is also necessary to monitor the usage pattern and collect data on a macro level to develop policies that are beneficial to the overall reduction of the carbon foot print at the home and office level, as well as on a national level. Empowering the individual and the society to exercise the necessary controls by monitoring the power usage is an area where the power line communication and control can be effectively and optimally used.

In one embodiment of the invention, the devices include an intelligent master sensor and its sub-sets, such as a communication and power management sensor and a power control switch sensor. The master device is configured to collect, compile, and communicate the collected data via the web or other communication medium to the outside world. The master device also receives and distributes control instructions that are used to control the power usage via the associated switches in the home or office. The sensors are used in the home or office environment to provide integrated sensing and control of home power usage and power management, while establishing a LAN having communication capability, including streaming media delivery capability.

Respectfully submitted,

Michael A. Glenn
Attorney for Applicant
Reg. No. 30,176

Customer No. 22862

UNITED STATES PATENT AND TRADEMARK OFFICE

UNITED STATES DEPARTMENT OF COMMERCE
United States Patent and Trademark Office
Address: COMMISSIONER FOR PATENTS
P.O. Box 1450
Alexandria, Virginia 22313-1450
www.uspto.gov

APPLICATION NO.	FILING DATE	FIRST NAMED INVENTOR	ATTORNEY DOCKET NO.	CONFIRMATION NO.
13/032,454	02/22/2011	Mingyao XIA	ASOK0001	6910

22862 7590 12/05/2011
GLENN PATENT GROUP
3475 EDISON WAY, SUITE L
MENLO PARK, CA 94025

EXAMINER
DECADY, ALBERT

ART UNIT	PAPER NUMBER
2121	

NOTIFICATION DATE	DELIVERY MODE
12/05/2011	ELECTRONIC

Please find below and/or attached an Office communication concerning this application or proceeding.

The time period for reply, if any, is set in the attached communication.

Notice of the Office communication was sent electronically on above-indicated "Notification Date" to the following e-mail address(es):

ptomatters@glenn-law.com

UNITED STATES PATENT AND TRADEMARK OFFICE

Commissioner for Patents
United States Patent and Trademark Office
P.O. Box 1450
Alexandria, VA 22313-1450
www.uspto.gov

GLENN PATENT GROUP
3475 EDISON WAY, SUITE L
MENLO PARK CA 94025

In re Application of:	:	
XIA, Mingyao et al.	:	DECISION ON PETITION
Application No.: 13/032,454	:	TO MAKE SPECIAL UNDER
Filed: February 22, 2011	:	THE GREEN TECHNOLOGY
For: **METHOD AND APPARATUS FOR USING PLC-BASED SENSOR UNITS FOR COMMUNICATION AND STREAMING MEDIA DELIVERY, AND FOR MONITORING AND CONTROL OF POWER USAGE OF CONNECTED APPLIANCES**	:	PILOT PROGRAM

This is a decision on the petition under 37 CFR 1.102, filed November 22, 2011, to make the above-identified application special under the pilot program for applications pertaining to Green Technologies as set forth in 74 Federal Register Notice 64666 (December 8, 2009) and amended by 75 Federal Register Notice 28554 (May 21, 2010).

The petition is **GRANTED**.

A grantable petition to make an application special under 37 CFR 1.102 and the pilot program as set forth in 74 FR 64666 must be directed to a nonprovisional application filed under 35 USC 111(a) or be a national stage entry under 35 USC 371, exclusive of any reissue applications and be filed prior to the date of the notice, December 8, 2009.

In order to qualify for special status, the following requirements must be met. 1) The application must have no more than 3 independent claims and no more than 20 total claims. 2) The application must not contain any multiple dependent claims. 3) The petition must state the basis for seeking special status, i.e., the claimed invention either: A) materially enhances the quality of the environment or B) materially contributes to: i) the discovery or development of renewable energy resources, ii) the more efficient utilization and conservation of energy resources, or iii) greenhouse gas emission reduction. 4) If the disclosure is not clear on its face that the claimed invention materially contributes under category (A) or (B), the petition must be accompanied by a statement by the applicant, assignee, or an attorney/agent registered to practice before the Office explaining how the materiality standard is met. 5) A statement that applicant will agree to

make an election without traverse in a telephonic interview if a restriction requirement is made by the examiner. 6) The petition to make special must be filed electronically. 7) The petition must be filed at least one day prior to the date that a first Office Action appears in the Patent Application Information Retrieval (PAIR) system. 8) The petition must be accompanied by a request for early publication in compliance with 37 CFR 1.219 and include the publication fee as set forth in 37 CFR 1.18(d).

The requirement for a fee for consideration of the petition to make special for applications pertaining to Green Technologies has been waived.

The instant petition complies with items 1 – 8 above. Accordingly, the above-identified application has been accorded "special" status.

The application is being forwarded to the Technology Center Art Unit 2121 for action on the merits commensurate with this decision.

Telephone inquires concerning this decision should be directed to Eddie C. Lee at 571-272-1732.

/Eddie C. Lee/

Quality Assurance Specialist
Technology Center 2100

PTO/SB/20PCT-KR (06-10)
Approved for use through 01/31/2012. OMB 0651-0058
U.S. Patent and Trademark Office; U. S. DEPARTMENT OF COMMERCE
Under the Paperwork Reduction Act of 1995, no persons are required to respond to a collection of information unless it displays a valid OMB control number.

REQUEST FOR PARTICIPATION IN THE PATENT COOPERATION TREATY - PATENT PROSECUTION HIGHWAY (PCT-PPH) PILOT PROGRAM BETWEEN THE KOREAN INTELLECTUAL PROPERTY OFFICE (KIPO) AND THE USPTO

Application No:	13/032466	Filing date:	2011-02-22
First Named Inventor:	Sharp		
Title of the Invention:	Bendable liquid crystal polarization switch for direct view stereoscopic display		

THIS REQUEST FOR PARTICIPATION IN THE PCT-PPH PILOT PROGRAM ALONG WITH THE REQUIRED DOCUMENTS MUST BE SUBMITTED VIA EFS-WEB. INFORMATION REGARDING EFS-WEB IS AVAILABLE AT HTTP://WWW.USPTO.GOV/EBC/EFS_HELP.HTML

APPLICANT HEREBY REQUESTS PARTICIPATION IN THE PCT-PPH PROGRAM AND PETITIONS TO MAKE THE ABOVE-IDENTIFIED APPLICATION SPECIAL UNDER THE PCT-PPH PROGRAM.

The above-identified application is (1) a national stage entry of the corresponding PCT application, or (2) a national stage entry of another PCT application which claims priority to the corresponding PCT application, or (3) a national application that claims domestic/ foreign priority to the corresponding PCT application, or (4) a national application which forms the basis for the priority claim in the corresponding PCT application, or (5) a continuing application of a U.S. application that satisfies one of (1) to (4) above, or (6) a U.S. application that claims domestic benefit to a U.S. provisional application which forms the basis for the priority claim in the corresponding PCT application.

The corresponding PCT application number(s) is/are: PCT/US11/25742

The international filing date of the corresponding PCT application(s) is/are: 2011-02-22

I. List of Required Documents:

a. **A copy of the latest international work product (WO/ISA, WO/IPEA, or IPER) in the above–identified corresponding PCT application(s)**

☐ Is attached.

☑ Is not attached because the document is already in the U.S. application.

b. **A copy of all claims which were indicated as having novelty, inventive step and industrial applicability in the above-identified corresponding PCT application(s).**

☑ Is attached.

☐ Is not attached because the document is already in the U.S. application.

c. **English translations of the documents in a. and b. above are attached (if the documents are not in the English language). A statement that the English translation is accurate is attached for the document in b. above.**

This collection of information is required by 35 U.S.C. 119, 37 CFR 1.55, and 37 CFR 1.102(d). The information is required to obtain or retain a benefit by the public, which is to file (and by the USPTO to process) an application. Confidentiality is governed by 35 U.S.C. 122 and 37 CFR 1.11 and 1.14. This collection is estimated to take 2 hours to complete, including gathering, preparing, and submitting the completed application form to the USPTO. Time will vary depending upon the individual case. Any comments on the amount of time you require to complete this form and/or suggestions for reducing this burden should be sent to the Chief Information Officer, U.S. Patent and Trademark Office, U.S. Department of Commerce, P.O. Box 1450, Alexandria, VA 22313-1450. DO NOT SEND FEES OR COMPLETED FORMS TO THIS ADDRESS.

Approved for use through 01/31/2012. OMB 0651-0058
U.S.Patent and Trademark Office; U.S. DEPARTMENT OF COMMERCE
Under the Paperwork Reduction Act of 1995, no persons are required to respond to a collection of information unless it displays a valid OMB control number.

REQUEST FOR PARTICIPATION IN THE PCT-PPH PILOT PROGRAM BETWEEN THE KIPO AND THE USPTO

(continued)

Application No.:	13/032466
First Named Inventor:	Sharp

d. **(1) An information disclosure statement listing the documents cited in the international work products (ISR, WO/ISA, WO/IPEA, IPER) of the corresponding PCT application.**

☐ Is attached

☑ Has already been filed in the above-identified U.S. application on All US References

(2) Copies of all documents (except) for U.S. patents or U.S. patent application publications)

☐ Are attached.

☑ Have already been filed in the above-identified U.S. application on All US References

II. Claims Correspondence Table:

Claims in US Application	Patentable Claims in the corresponding PCT Application	Explanation regarding the correspondence
1-29	1-29	Claims in the PCT are exactly the same as claims in US

III. All the claims in the US application sufficiently correspond to the patentable claims in the corresponding PCT application.

Signature /Charles C. Yang, Reg. No. 62059/	Date January 26, 2012
Name (Print/Typed) Charles C. Yang	Registration Number 62059

Privacy Act Statement

The **Privacy Act of 1974 (P.L. 93-579)** requires that you be given certain information in connection with your submission of the attached form related to a patent application or patent. Accordingly, pursuant to the requirements of the Act, please be advised that: (1) the general authority for the collection of this information is 35 U.S.C. 2(b)(2); (2) furnishing of the information solicited is voluntary; and (3) the principal purpose for which the information is used by the U.S. Patent and Trademark Office is to process and/or examine your submission related to a patent application or patent. If you do not furnish the requested information, the U.S. Patent and Trademark Office may not be able to process and/or examine your submission, which may result in termination of proceedings or abandonment of the application or expiration of the patent.

The information provided by you in this form will be subject to the following routine uses:

1. The information on this form will be treated confidentially to the extent allowed under the Freedom of Information Act (5 U.S.C. 552) and the Privacy Act (5 U.S.C 552a). Records from this system of records may be disclosed to the Department of Justice to determine whether disclosure of these records is required by the Freedom of Information Act.
2. A record from this system of records may be disclosed, as a routine use, in the course of presenting evidence to a court, magistrate, or administrative tribunal, including disclosures to opposing counsel in the course of settlement negotiations.
3. A record in this system of records may be disclosed, as a routine use, to a Member of Congress submitting a request involving an individual, to whom the record pertains, when the individual has requested assistance from the Member with respect to the subject matter of the record.
4. A record in this system of records may be disclosed, as a routine use, to a contractor of the Agency having need for the information in order to perform a contract. Recipients of information shall be required to comply with the requirements of the Privacy Act of 1974, as amended, pursuant to 5 U.S.C. 552a(m).
5. A record related to an International Application filed under the Patent Cooperation Treaty in this system of records may be disclosed, as a routine use, to the International Bureau of the World Intellectual Property Organization, pursuant to the Patent Cooperation Treaty.
6. A record in this system of records may be disclosed, as a routine use, to another federal agency for purposes of National Security review (35 U.S.C. 181) and for review pursuant to the Atomic Energy Act (42 U.S.C. 218(c)).
7. A record from this system of records may be disclosed, as a routine use, to the Administrator, General Services, or his/her designee, during an inspection of records conducted by GSA as part of that agency's responsibility to recommend improvements in records management practices and programs, under authority of 44 U.S.C. 2904 and 2906. Such disclosure shall be made in accordance with the GSA regulations governing inspection of records for this purpose, and any other relevant (*i.e.*, GSA or Commerce) directive. Such disclosure shall not be used to make determinations about individuals.
8. A record from this system of records may be disclosed, as a routine use, to the public after either publication of the application pursuant to 35 U.S.C. 122(b) or issuance of a patent pursuant to 35 U.S.C. 151. Further, a record may be disclosed, subject to the limitations of 37 CFR 1.14, as a routine use, to the public if the record was filed in an application which became abandoned or in which the proceedings were terminated and which application is referenced by either a published application, an application open to public inspection or an issued patent.
9. A record from this system of records may be disclosed, as a routine use, to a Federal, State, or local law enforcement agency, if the USPTO becomes aware of a violation or potential violation of law or regulation.

UNITED STATES PATENT AND TRADEMARK OFFICE

Commissioner for Patents
United States Patent and Trademark Office
P.O. Box 1450

MAILED
MAR 01 2012
OFFICE OF PETITIONS

REALD Inc. - Patent Department
by Baker & McKenzie LLP
2001 Ross Avenue, Suite 2300
Dallas TX 75201

In re Application of
Gary D. SHARP et al.
Application No. 13/032,466
Filed: February 22, 2011
Atty. Docket No.: 95194936.272001
For: BENDABLE LIQUID CRYSTAL POLARIZATION SWITCH FOR DIRECT VIEW STEREOSCOPIC DISPLAY

: DECISION ON REQUEST TO
: PARTICIPATE IN PCT-PPH PROGRAM
: AND PETITION TO MAKE SPECIAL
: UNDER 37 CFR 1.102(a)

This is a decision on the request to participate in the PCT Patent Prosecution Highway (PCT-PPH) program and the petition under 37 CFR 1.102(a), filed January 26, 2012, to make the above-identified application special.

The request and petition are **DISMISSED.**

A grantable request to participate in the PCT –PPH program and petition to make special under 37 CFR 1.102(a) require:

(1) the U.S. application must have an eligible relationship to one or more PCT application where the ISA or IPEA are the JPO, EPO, KIPO, IPAU, Russia, Spain, Finland, Austria, or USPTO;

(2) at least one claim in the PCT application has novelty, inventive step, and industrial applicability and must be free of any observations in Box VIII in the latest work product in the international stage or applicant must identify and explain why the claim(s) is/are not subject to the observation in Box VIII;

(3) applicant must submit a copy of the claim(s) from the PCT application(s) that have novelty, inventive step, and industrial applicability along with an English translation thereof and a statement that the English translation is accurate, if the claims are not in the English language;

(4) all the claims in the U.S. application must sufficiently correspond or be amended to sufficiently correspond to the claim(s) that have novelty, inventive step, and industrial applicability in the PCT application(s);

(5) examination of the U.S. application has not begun;

(6) applicant must submit a copy of the latest international work product from the PCT application indicating that the claim(s) have novelty, inventive step, and industrial applicability along with an English translation thereof;

(7) applicant must submit an IDS listing the documents cited by the PCT examiner in the international work product along with copies of documents except U.S. patents or U.S. patent application publications; and

(8) applicant is required to submit a claims correspondence table in English which indicates how all the claims in the U.S. application correspond to the claims indicated as having novelty, inventive step, and industrial applicability in the latest international work product.

Requirements (2) to (8) above are considered to have been met. However, the request to participate in the PPH program and petition fail to meet requirement (1).

Regarding requirement (1), the instant U.S. application fails to indicate a relationship to the PCT application.

Applicant is given **ONE** opportunity with a time period of **ONE MONTH** or **THIRTY DAYS**, whichever is longer, from the mailing date of this decision to correct the deficiencies. **NO EXTENSION OF TIME UNDER 37 CFR 1.136 IS PERMITTED.** If the deficiencies are not corrected within the time period given, the application will await action in its regular turn.

Response must be filed via the Electronic Filing System (EFS) using the document description: Petition to make special under Patent Pros. Hwy. Any preliminary amendments and IDS submitted with the PPH documents must be separately indexed as a preliminary amendment and IDS, respectively.

Telephone inquiries concerning this decision should be directed to Robert DeWitty, Petition Attorney, Office of Petitions at 571-272-8427.

All other inquiries concerning the examination or status of the application is accessible in the PAIR system at http://www.uspto.gov/ebc/index.html.

David Bucci
Petitions Examiner
Office of Petitions

IN THE UNITED STATES PATENT AND TRADEMARK OFFICE

Applicant(s):	Gary D. Sharp	§	**Group Art No.:**	2871
		§		
Serial No.:	13/032,466	§	**Examiner:**	Glick, Edward J.
		§		
Filed:	February 22, 2011	§	**Atty. Docket No.:**	95194936.272001
		§		
		§	**Title:** Bendable liquid crystal polarization switch for direct view stereoscopic display	

Submitted via EFS
Attn: Office of Petitions
Commissioner of Patents
P.O. Box 1450
Alexandria, VA 22313-1450

REQUEST FOR RECONSIDERATION OF DECISION ON A REQUEST TO PARTICIPATE IN PATENT PCT PROSECUTION HIGHWAY PROGRAM AND PETITION TO MAKE SPECIAL UNDER CFR 1.102(a)

Dear Sir:

In response to the Decision on a Request to Participate in Patent PCT Prosecution Highway Program and Petition to Make Special Under CFR 1.102(a) mailed March 1, 2012, Applicant hereby respectfully submits the following before the expiration of the one-month response period:

Relationship to PCT Application No. PCT/US2011/025742

1) The present utility application claims domestic benefit to U.S. provisional application no. 61/306,897 filed February 22, 2010, which also forms the basis for the priority claim in the corresponding PCT Application No. PCT/US2011/025742. A front page copy of the corresponding PCT publication (WO 2011/103581) showing the related priority claim is submitted herewith.

In view of the above, Applicant believes that requirement (1) noted in the decision for participating in the PCT Patent Prosecution Highway program has been met. It is believed that no fees are due in association with this request, however, the Commissioner is hereby authorized

to charge Deposit Account No. 13-0480 any delinquencies or credit any overpayment, referencing Attorney Docket Number 95194936.272001.

If the Petitions Attorney has any questions or would like to discuss any of the above, a telephone conference with the attorney listed below is greatly appreciated.

Respectfully submitted,

Dated: March 30, 2012

By: /Charles C. Yang, Reg. No. 62,059/

Charles C. Yang
Registration No. 62,059
BAKER & McKENZIE LLP
2001 Ross Avenue, Suite 2300
Dallas, TX 75201
(214) 978-3020 direct
(214) 978-3099 fax

(12) INTERNATIONAL APPLICATION PUBLISHED UNDER THE PATENT COOPERATION TREATY (PCT)

(19) World Intellectual Property Organization
International Bureau

(43) International Publication Date
25 August 2011 (25.08.2011)

PCT

(10) International Publication Number
WO 2011/103581 A2

(51) International Patent Classification:
G02B 27/26 (2006.01) *G02F 1/1335* (2006.01)
H04N 13/00 (2006.01)

(21) International Application Number:
PCT/US2011/025742

(22) International Filing Date:
22 February 2011 (22.02.2011)

(25) Filing Language: English

(26) Publication Language: English

(30) Priority Data:
61/306,897 22 February 2010 (22.02.2010) US

(71) Applicant *(for all designated States except US)*: **REALD INC.** [US/US]; 100 North Crescent Drive, Suite 120, Beverly Hills, CA 90210 (US).

(72) Inventors; and
(75) Inventors/Applicants *(for US only)*: **SHARP, Gary, D.** [US/US]; 100 North Crescent Drive, Suite 120, Beverly Hills, CA 90210 (US). **ROBINSON, Michael, G.** [GB/US]; 100 North Crescent Drive, Suite 120, Beverly Hills, CA 90210 (US).

(74) Agent: **LOWRY, Penny L.**; Baker & Mckenzie LLP, 2001 Ross Avenue, Suite 2300, Dallas, TX 75201 (US).

(81) Designated States *(unless otherwise indicated, for every kind of national protection available)*: AE, AG, AL, AM, AO, AT, AU, AZ, BA, BB, BG, BH, BR, BW, BY, BZ, CA, CH, CL, CN, CO, CR, CU, CZ, DE, DK, DM, DO, DZ, EC, EE, EG, ES, FI, GB, GD, GE, GH, GM, GT, HN, HR, HU, ID, IL, IN, IS, JP, KE, KG, KM, KN, KP, KR, KZ, LA, LC, LK, LR, LS, LT, LU, LY, MA, MD, ME, MG, MK, MN, MW, MX, MY, MZ, NA, NG, NI, NO, NZ, OM, PE, PG, PH, PL, PT, RO, RS, RU, SC, SD, SE, SG, SK, SL, SM, ST, SV, SY, TH, TJ, TM, TN, TR, TT, TZ, UA, UG, US, UZ, VC, VN, ZA, ZM, ZW.

(84) Designated States *(unless otherwise indicated, for every kind of regional protection available)*: ARIPO (BW, GH, GM, KE, LR, LS, MW, MZ, NA, SD, SL, SZ, TZ, UG, ZM, ZW), Eurasian (AM, AZ, BY, KG, KZ, MD, RU, TJ, TM), European (AL, AT, BE, BG, CH, CY, CZ, DE, DK, EE, ES, FI, FR, GB, GR, HR, HU, IE, IS, IT, LT, LU, LV, MC, MK, MT, NL, NO, PL, PT, RO, RS, SE, SI, SK, SM, TR), OAPI (BF, BJ, CF, CG, CI, CM, GA, GN, GQ, GW, ML, MR, NE, SN, TD, TG).

Published:
— *without international search report and to be republished upon receipt of that report (Rule 48.2(g))*

(54) Title: BENDABLE LIQUID CRYSTAL POLARIZATION SWITCH FOR DIRECT VIEW STEREOSCOPIC DISPLAY

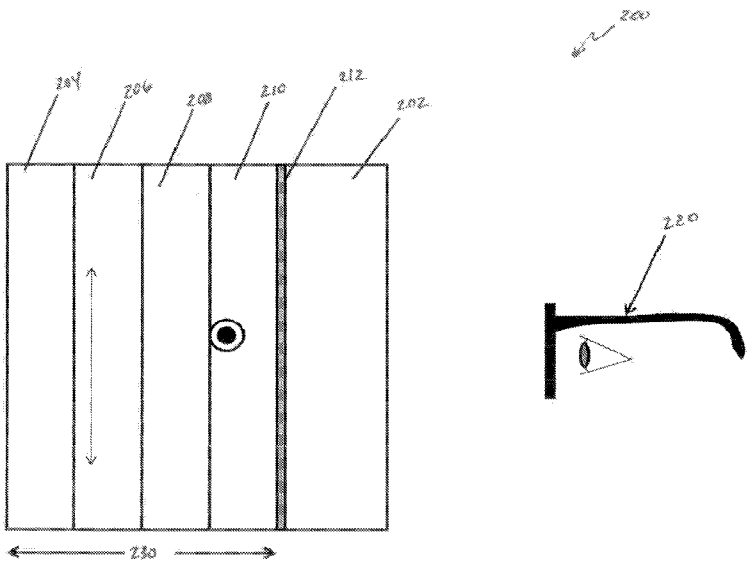

FIGURE 2

(57) Abstract: A system for stereoscopic display and a bendable polarization switch for use with a system for stereoscopic display provide alternately polarized left and right eye images. Viewers then wear polarization analyzing eyewear to correctly see the different images. More specifically, a bendable polarization switch may be laminated to the front of a system for stereoscopic display. The bendable polarization switch may be used with a modulator configuration that is compatible with various performance requirements in a manner that is a low-cost manufacturing friendly solution. Further, the bendable polarization switch is a robust polarization switch technology that is reliable in an environment where mechanical stresses are inevitably applied during product lifetime.

WO 2011/103581 A2

UNITED STATES PATENT AND TRADEMARK OFFICE

Commissioner for Patents
United States Patent and Trademark Office
P.O. Box 1450
Alexandria, VA 22313-1450
www.uspto.gov

REINHART BOERNER VAN DEUREN S.C.
ATTN: LINDA KASULKE, DOCKET COORDINATOR
1000 NORTH WATER STREET
SUITE 2100
MILWAUKEE, WI 53202

MAILED
FEB 23 2012
OFFICE OF PETITIONS

In re Application of	**: DECISION ON REQUEST TO**
Michael T. LARSEN et al.	**: PARTICIPATE IN THE PATENT**
Application No.: 13/032,469	**: PROSECUTION HIGHWAY**
Filed: February 22, 2011	**: PROGRAM AND PETITION**
Attorney Docket No.: 11109	**: TO MAKE SPECIAL UNDER**
Title: Inline Water Trap	**: 37 CFR 1.102(a)**

This is a decision on the request to participate in the PCT Patent Prosecution Highway (PCT-PPH) pilot program and the petition under 37 CFR 1.102(a), filed on December 23, 2011, to make the above-identified application special.

The request and petition are **DISMISSED**.

Discussion

A grantable request to participate in the PCT-PPH pilot program and petition to make special require:

(1) The U.S. application must have an eligible relationship to one or more PCT applications where the ISA or IPEA are the JPO, EPO, KIPO, IPAU, Russia, Spain, Finland, Austria, or USPTO;

(2) At least one claim in the PCT application has novelty, inventive step, and industrial applicability and must be free of any observations in Box VIII in the latest work product in the international stage or applicant must identify and explain why the claim(s) is/are not subject to the observation in Box VIII;

(3) Applicant must submit a copy of the claim(s) from the PCT application(s) that have novelty, inventive step, and industrial applicability along with an English translation thereof and a statement that the English translation is accurate, if the claims are not in the English language;

(4) All the claims in the U.S. application must sufficiently correspond or be amended to sufficiently correspond to the claim(s) that have novelty, inventive step, and industrial applicability in the PCT application(s);

(5) Examination of the U.S. application has not begun;

(6) Applicant must submit a copy of the latest international work product from the PCT application indicating that the claim(s) have novelty, inventive step, and industrial applicability along with an English translation thereof.

(7) Applicant must submit an IDS listing the documents cited by the PCT examiner in the international work product along with copies of documents except U.S. patents or U.S. patent application publications.

(8) Applicant is required to submit a claims correspondence table in English which indicates how all the claims in the U.S. application correspond to the claims indicated as having novelty, inventive step and industrial applicability in the latest international work product.

Requirements (1-6, 8) above are considered to have been met. However, the request to participate in the PPH pilot program and petition fail to meet requirements (7).

Regarding requirement (7), the PCT examiner cited US patent 4,924,860 (Larson et al.). This publication was not cited on applicant's IDSes, filed November 10, 2011 and June 30, 2011.

Applicant is given **ONE** opportunity within a time period of **ONE MONTH or THIRTY DAYS**, whichever is longer, from the mailing date of this decision to correct the deficiencies. **NO EXTENSION OF TIME UNDER 37 CFR 1.136 IS PERMITTED.** If the deficiencies are not corrected with the time period given, the application will await action in its regular turn.

Response must be filed via the Electronic Filing System (EFS) using the document description: Petition to make special under PCT – Patent Pros Hwy. Any preliminary amendments and IDS submitted with the PPH documents must be separately indexed as a preliminary amendment and IDS, respectively.

Telephone inquiries concerning this decision should be directed to Joanne Hama at (571) 272-2911 or in her absence, the undersigned at (571) 272-7099.

All other inquiries concerning the examination or status of the application is accessible in the PAIR system at http://www.uspto.gov/ebc/index.html.

David Bucci
Petitions Examiner
Office of Petitions

I hereby certify that this correspondence is being transmitted to the United States Patent and Trademark Office through EFS-Web on: March 19, 2012.

PATENT APPLICATION

Reinhart Boerner Van Deuren S.C.

By: /Linda Kasulke/
Linda Kasulke

Date: March 19, 2012

IN THE UNITED STATES PATENT AND TRADEMARK OFFICE

GROUP ART UNIT: 1776

EXAMINER: KARLA HAWKINS

In re application of: Michael T. Larsen et al.	)	
Application No: 13/032,469	)	
Confirmation No.: 6944	)	For: INLINE WATER TRAP
Filed: February 22, 2011	)	
Attorney Docket No.: 11109	)	
Customer No.: 22922	)	

Commissioner for Patents
Petition to Make Special under PCT - Patent Pros Hwy
P.O. Box 1450
Alexandria, VA 22313-1450

March 19, 2012

RESPONSE TO DECISION ON REQUEST TO PARTICIPATE IN THE PATENT PROSECUTION HIGHWAY PROGRAM AND PETITION TO MAKE SPECIAL UNDER 37 CFR 1.102(a)

Sir:

This is responsive to the Decision on Request to Participate in the Patent Prosecution Highway Program and Petition to Make Special Under 37 CFR 1.102(a) dated February 23, 2012.

The U.S. Patent and Trademark Office is authorized to charge any fees required to secure the entry of this Response, or to credit any overpayment, to Deposit Account No. 18-0882.

Remarks begin on page 3 of this Response to the Decision.

UNITED STATES PATENT AND TRADEMARK OFFICE

Commissioner for Patents
United States Patent and Trademark Office
P.O. Box 1450
Alexandria, VA 22313-1450
www.uspto.gov

REINHART BOERNER VAN DEUREN S.C.
ATTN: LINDA KASULKE, DOCKET COORDINATOR
1000 NORTH WATER STREET
SUITE 2100
MILWAUKEE WI 53202

MAILED

MAR 29 2012

OFFICE OF PETITIONS

In re Application of:	: DECISION ON REQUEST TO
Larsen et al.	: PARTICIPATE IN THE PATENT
Application No. 13/032,469	: PROSECUTION HIGHWAY
Filed: February 22, 2011	: PROGRAM AND PETITION
Attorney Docket No. 11109	: TO MAKE SPECIAL UNDER
	: 37 CFR 1.102(a)

This is a decision on the second request to participate in the PCT Patent Prosecution Highway (PCT-PPH) program and the petition under 37 CFR 1.102(a), filed on March 19, 2012 to make the above-identified application special.

The request and petition are **GRANTED**.

Discussion

A grantable request to participate in the PCT-PPH pilot program and petition to make special require:

(1) The U.S. application must have an eligible relationship to one or more PCT applications where the ISA or IPEA are the JPO, EPO, KIPO, NPI, NBPR, or USPTO;

(2) At least one claim in the PCT application has novelty, inventive step, and industrial applicability and must be free of any observations in Box VIII in the latest work product in the international stage or applicant must identify and explain why the claim(s) is/are not subject to the observation in Box VIII;

(3) Applicant must submit a copy of the claim(s) from the PCT application(s) that have novelty, inventive step, and industrial applicability along with an English translation thereof and a statement that the English translation is accurate, if the claims are not in the English language;

(4) All the claims in the U.S. application must sufficiently correspond or be amended to sufficiently correspond to the claim(s) that have novelty, inventive step, and industrial applicability in the PCT application(s);

(5) Examination of the U.S. application has not begun;

(6) Applicant must submit a copy of the latest international work product from the PCT application indicating that the claim(s) have novelty, inventive step, and industrial applicability along with an English translation thereof and a statement that the English translation is accurate if the latest international work product is not in the English language;

(7) Applicant must submit an IDS listing the documents cited by the PCT examiner in the international work product along with copies of documents except U.S. patents or U.S. patent application publications.

The request to participate in the PCT-PPH pilot program and petition comply with the above requirements. Accordingly, the above-identified application has been accorded "special" status.

Telephone inquiries concerning this decision should be directed to Petitions Examiner Joan Olszewski at 571-272-7751.

All other inquiries concerning the examination or status of the application is accessible in the PAIR system at http://www.uspto.gov/ebc.index.html.

This application will be forwarded to the examiner for action on the merits commensurate with this decision once this application's formality reviews have been completed.

/dab/
David Bucci
Petitions Examiner
Office of Petitions

Doc Code: PET.GREEN
Document Description: Petition for Green Tech Pilot

PTO/SB/420 (11-10)
Approved for use through 01/31/2011. OMB 0651-0062
U.S. Patent and Trademark Office; U. S. DEPARTMENT OF COMMERCE
Under the Paperwork Reduction Act of 1995, no persons are required to respond to a collection of information unless it displays a valid OMB control number.

PETITION TO MAKE SPECIAL UNDER THE GREEN TECHNOLOGY PILOT PROGRAM

Attorney Docket Number: PTE-P-103	Application Number (if known):	Filing date: February 22, 2011
First Named Inventor: Robert Steele		
Title: Solid State Lamp Using Light Emitting Strips		

APPLICANT HEREBY REQUESTS TO PARTICIPATE IN THE GREEN TECHNOLOGY PILOT PROGRAM FOR THE ABOVE-IDENTIFIED APPLICATION. See Instruction Sheet on page 2.

This petition must be timely filed electronically using the USPTO electronic filing system, EFS-Web.

1. By filing this petition:

   Applicant is requesting early publication: Applicant hereby requests early publication under 37 CFR 1.219 and the publication fee set forth in 37 CFR 1.18(d) accompanies this request.

2. By filing this petition: applicant is agreeing to make an election without traverse in a telephonic interview and elect an invention that meets the eligibility requirements for the Green Technology Pilot Program, if the Office determines that the claims are not obviously directed to a single invention. See Instruction Sheet.

3. This request is accompanied by statements of special status for the eligibility requirement.

4. The application contains no more than three (3) independent claims and twenty (20) total claims.

5. The application does not contain any multiple dependent claims.

6. Other attachments: Description of why invention qualifies under program by conserving energy

Signature /Brian D Ogonowsky/	Date February 22, 2011
Name (Print/Typed) Brian D. Ogonowsky	Registration Number 31,988

Note: *Signatures of all the inventors or assignees of record of the entire interest or their representative(s) are required in accordance with 37 CFR 1.33 and 11.18. Please see 37 CFR 1.4(d) for the form of the signature. If necessary, submit multiple forms for more than one signature see below*.*

☒ *Total of 1 forms are submitted.

The information is required to obtain or retain a benefit by the public which is to file (and by the USPTO to process) an application. Confidentiality is governed by 35 U.S.C. 122 and 37 CFR 1.11 and 1.14. This collection is estimated to take 12 hours to complete, including gathering, preparing, and submitting the completed application form to the USPTO. Time will vary depending upon the individual case. Any comments on the amount of time you require to complete this form and/or suggestions for reducing this burden, should be sent to the Chief Information Officer, U.S. Patent and Trademark Office, U.S. Department of Commerce, P.O. Box 1450, Alexandria, VA 22313-1450. DO NOT SEND FEES OR COMPLETED FORMS TO THIS ADDRESS. **SEND TO: Commissioner for Patents, P.O. Box 1450, Alexandria, VA 22313-1450.**

If you need assistance in completing the form, call 1-800-PTO-9199 and select option 2.

IN THE UNITED STATES PATENT AND TRADEMARK OFFICE

Applicants:	Robert Steele et al.		
Assignee:	Quarkstar, LLC		
Title:	Solid State Lamp Using Light Emitting Strips		
Serial No.:	Filed herewith	Filing Date:	
Examiner:	Not yet assigned	Group Art Unit:	Not yet assigned
Docket No.:	PTE-P-103	Confirmation No.:	

San Jose, California

Mail Stop Petition
Commissioner for Patents
P.O. Box 1450
Alexandria, VA 23313-1450

PETITION TO MAKE SPECIAL UNDER GREEN TECHNOLOGY PILOT PROGRAM

Dear Commissioner:

A completed form PTO/SB/420 is enclosed herewith requesting that the above-identified application be accepted for the Green Technology Pilot Program for accelerated examination. The below statement provides the additional information requested to qualify for the Program.

The application is a regular utility application filed under 35 USC 111(a).

The application contains three or fewer independent claims and 20 or fewer total claims. The application contains no multiple dependent claims.

Applicants request early publication under 37 CFR 1.219, and the publication fee accompanies this request.

The patent application relates to a solid state lamp, containing many LEDs, that may be used to replace a standard, inefficient incandescent bulb or other standard lamp. The yearly market for such lamps in the United States is well in excess of a billion units, so the

PATENT LAW GROUP LLP
2635 N. FIRST ST.
SUITE 223
SAN JOSE, CA 95134
(408) 382-0480
FAX (408) 382-0481

potential energy savings to the United States is enormous. Further, the inventors have invented the first practical solid state lamp that is cost-effective enough to be a viable replacement for a standard lamp. The increased energy efficiency of the lamp is part of the cost-effectiveness calculation. Furthermore, fluorescent lamps contain mercury, which requires special disposal procedures that add to the energy costs.

Accordingly, the claims fall under the criteria for the Green Technology Program due to the inherent increased energy efficiency of the claimed solid state lamp over a conventional lamp and due to the advantages over fluorescent bulbs.

If there are any questions, please call the undersigned at (408) 382-0480 ex202.

Respectfully submitted,

/Brian D Ogonowsky/

Brian D Ogonowsky
Attorney for Applicant(s)
Reg. No. 31,988

PATENT LAW GROUP LLP
2635 N. FIRST ST.
SUITE 223
SAN JOSE, CA 95134
(408) 382-0480
FAX (408) 382-0481

UNITED STATES PATENT AND TRADEMARK OFFICE

UNITED STATES DEPARTMENT OF COMMERCE
United States Patent and Trademark Office
Address: COMMISSIONER FOR PATENTS
P.O. Box 1450
Alexandria, Virginia 22313-1450
www.uspto.gov

APPLICATION NO.	FILING DATE	FIRST NAMED INVENTOR	ATTORNEY DOCKET NO.	CONFIRMATION NO.
13/032,502	02/22/2011	Robert Steele	PTE-P-103	7021

7590 04/05/2011

Brian D. Ogonowsky
Patent Law Group LLP
Suite 223
2635 North First Street
San Jose, CA 95134-2049

EXAMINER

ART UNIT	PAPER NUMBER
2875	

MAIL DATE	DELIVERY MODE
04/05/2011	PAPER

Please find below and/or attached an Office communication concerning this application or proceeding.

The time period for reply, if any, is set in the attached communication.

UNITED STATES PATENT AND TRADEMARK OFFICE

Commissioner for Patents
United States Patent and Trademark Office
P.O. Box 1450
Alexandria, VA 22313-1450
www.uspto.gov

Brian D. Ogonowsky
Patent Law Group LLP
Suite 223
2635 North First Street
San Jose CA 95134-2049

In re Application of	:	
STEELE et al.	:	DECISION ON PETITION
Application No. 13/032,502	:	TO MAKE SPECIAL UNDER
Filed: February 22, 2011	:	THE GREEN TECHNOLOGY
Attorney Docket No. PTE-P-103	:	PILOT PROGRAM

This is a decision on the petition under 37 CFR 1.102, filed on February 22, 2011, to make the above-identified application special under the pilot program for applications pertaining to Green Technologies as set forth 74 Federal Register Notice 64666 (December 8, 2009) and amended by 75 Federal Register Notice 28554 (May 21, 2010) and 75 Federal Register Notice 69049 (November 10, 2010).

The petition is **GRANTED**.

A grantable petition to make an application special under 37 CFR 1.102 and the pilot program as set forth in 74 FR 64666 must be directed to a nonprovisional application filed under 35 USC 111(a) or be a national stage entry under 35 USC 371, exclusive of any reissue applications.

In order to qualify for special status, the following requirements must be met. 1) The application must have no more than 3 independent claims and no more than 20 total claims. 2) The application must not contain any multiple dependent claims. 3) The petition must state the basis for seeking special status, i.e., the claimed invention either: A) materially enhances the quality of the environment or B) materially contributes to: i) the discovery or development of renewable energy resources, ii) the more efficient utilization and conservation of energy resources, or iii) greenhouse gas emission reduction. 4) If the disclosure is not clear on its face that the claimed invention materially contributes under category (A) or (B), the petition must be accompanied by a statement by the applicant, assignee, or an attorney/agent registered to practice before the Office explaining how the materiality standard is met. 5) A statement that applicant will agree to make an election without traverse in a telephonic interview if a restriction requirement is made by the examiner. 6) The petition to make special must be filed electronically. 7) The petition must be filed at least one day prior to the date that a first Office Action appears in the Patent Application Information Retrieval (PAIR) system. 8) The petition must be accompanied by a request for early publication in compliance with 37 CFR 1.219 and include the publication fee as set forth in 37 CFR 1.18(d).

The requirement for a fee for consideration of the petition to make special for applications pertaining to Green Technologies has been waived.

The instant petition complies with items 1 – 8 above. Accordingly, the above-identified application has been accorded "special" status.

Telephone inquires concerning this decision should be directed to Lee W. Young at 571-272-4549.

The application is being forwarded to the Technology Center Art Unit 2875 for action in its regular turn.

Lee W. Young
Quality Assurance Specialist
Technology Center 2800

IN THE UNITED STATES PATENT AND TRADEMARK OFFICE

Applicants:	Wilson Dau et al.		
Assignee:	Quarkstar, LLC		
Title:	Solid State Lamp Using Modular Light Emitting Elements		
Serial No.:	Filed herewith	Filing Date:	
Examiner:	Not yet assigned	Group Art Unit:	Not yet assigned
Docket No.:	PTE-P-105	Confirmation No.:	

San Jose, California

Mail Stop Petition
Commissioner for Patents
P.O. Box 1450
Alexandria, VA 23313-1450

PETITION TO MAKE SPECIAL UNDER GREEN TECHNOLOGY PILOT PROGRAM

Dear Commissioner:

A completed form PTO/SB/420 is enclosed herewith requesting that the above-identified application be accepted for the Green Technology Pilot Program for accelerated examination. The below statement provides the additional information requested to qualify for the Program.

The application is a regular utility application filed under 35 USC 111(a).

The application contains three or fewer independent claims and 20 or fewer total claims. The application contains no multiple dependent claims.

Applicants request early publication under 37 CFR 1.219, and the publication fee accompanies this request.

The patent application relates to a solid state lamp, containing many LEDs, that may be used to replace a standard, inefficient incandescent bulb or other standard lamp. The yearly market for such lamps in the United States is well in excess of a billion units, so the

PATENT LAW GROUP LLP
2635 N. FIRST ST.
SUITE 223
SAN JOSE, CA 95134
(408) 382-0480
FAX (408) 382-0481

potential energy savings to the United States is enormous. Further, the inventors have invented the first practical solid state lamp that is cost-effective enough to be a viable replacement for a standard lamp. The increased energy efficiency of the lamp is part of the cost-effectiveness calculation. Furthermore, fluorescent lamps contain mercury, which requires special disposal procedures that add to the energy costs.

Accordingly, the claims fall under the criteria for the Green Technology Program due to the inherent increased energy efficiency of the claimed solid state lamp over a conventional lamp and due to the advantages over fluorescent bulbs.

If there are any questions, please call the undersigned at (408) 382-0480 ex202.

Respectfully submitted,

/Brian D Ogonowsky/

Brian D Ogonowsky
Attorney for Applicant(s)
Reg. No. 31,988

PATENT LAW GROUP LLP
2635 N. FIRST ST.
SUITE 223
SAN JOSE, CA 95134
(408) 382-0480
FAX (408) 382-0481

Doc Code: PET.GREEN
Document Description: Petition for Green Tech Pilot

PTO/SB/420 (11-10)
Approved for use through 01/31/2011. OMB 0651-0062
U.S. Patent and Trademark Office; U. S. DEPARTMENT OF COMMERCE
Under the Paperwork Reduction Act of 1995, no persons are required to respond to a collection of information unless it displays a valid OMB control number.

PETITION TO MAKE SPECIAL UNDER THE GREEN TECHNOLOGY PILOT PROGRAM

Attorney Docket Number: PTE-P-105	Application Number (if known):	Filing date: February 22, 2011
First Named Inventor: Wilson Dau		
Title: Solid State Lamp Using Modular Light Emitting Elements		

APPLICANT HEREBY REQUESTS TO PARTICIPATE IN THE GREEN TECHNOLOGY PILOT PROGRAM FOR THE ABOVE-IDENTIFIED APPLICATION. See Instruction Sheet on page 2.

This petition must be timely filed electronically using the USPTO electronic filing system, EFS-Web.

1. By filing this petition:

   Applicant is requesting early publication: Applicant hereby requests early publication under 37 CFR 1.219 and the publication fee set forth in 37 CFR 1.18(d) accompanies this request.

2. By filing this petition: applicant is agreeing to make an election without traverse in a telephonic interview and elect an invention that meets the eligibility requirements for the Green Technology Pilot Program, if the Office determines that the claims are not obviously directed to a single invention. See Instruction Sheet.

3. This request is accompanied by statements of special status for the eligibility requirement.

4. The application contains no more than three (3) independent claims and twenty (20) total claims.

5. The application does not contain any multiple dependent claims.

6. Other attachments: Description of why invention qualifies under program by conserving energy

Signature /Brian D Ogonowsky/	Date February 22, 2011
Name (Print/Typed) Brian D. Ogonowsky	Registration Number 31,988

Note: *Signatures of all the inventors or assignees of record of the entire interest or their representative(s) are required in accordance with 37 CFR 1.33 and 11.18. Please see 37 CFR 1.4(d) for the form of the signature. If necessary, submit multiple forms for more than one signature see below*.*

☒ *Total of 1 forms are submitted.

The information is required to obtain or retain a benefit by the public which is to file (and by the USPTO to process) an application. Confidentiality is governed by 35 U.S.C. 122 and 37 CFR 1.11 and 1.14. This collection is estimated to take 12 hours to complete, including gathering, preparing, and submitting the completed application form to the USPTO. Time will vary depending upon the individual case. Any comments on the amount of time you require to complete this form and/or suggestions for reducing this burden, should be sent to the Chief Information Officer, U.S. Patent and Trademark Office, U.S. Department of Commerce, P.O. Box 1450, Alexandria, VA 22313-1450. DO NOT SEND FEES OR COMPLETED FORMS TO THIS ADDRESS. **SEND TO: Commissioner for Patents, P.O. Box 1450, Alexandria, VA 22313-1450.**

If you need assistance in completing the form, call 1-800-PTO-9199 and select option 2.

UNITED STATES PATENT AND TRADEMARK OFFICE

UNITED STATES DEPARTMENT OF COMMERCE
United States Patent and Trademark Office
Address: COMMISSIONER FOR PATENTS
P.O. Box 1450
Alexandria, Virginia 22313-1450
www.uspto.gov

APPLICATION NO.	FILING DATE	FIRST NAMED INVENTOR	ATTORNEY DOCKET NO.	CONFIRMATION NO.
13/032,510	02/22/2011	Wilson Dau	PTE-P-105	7033

7590 03/29/2011

Brian D. Ogonowsky
Patent Law Group LLP
Suite 223
2635 North First Street
San Jose, CA 95134-2049

EXAMINER

ART UNIT	PAPER NUMBER
2875	

MAIL DATE	DELIVERY MODE
03/29/2011	PAPER

Please find below and/or attached an Office communication concerning this application or proceeding.

The time period for reply, if any, is set in the attached communication.

UNITED STATES PATENT AND TRADEMARK OFFICE

Commissioner for Patents
United States Patent and Trademark Office
P.O. Box 1450
Alexandria, VA 22313-1450
www.uspto.gov

Brian D. Ogonowsky
Patent Law Group LLP
Suite 223
2635 North First Street
San Jose CA 95134-2049

In re Application of	:	
DAU et al.	:	DECISION ON PETITION
Application No. 13/032,510	:	TO MAKE SPECIAL UNDER
Filed: February 22, 2011	:	THE GREEN TECHNOLOGY
Attorney Docket No. PTE-P-105	:	PILOT PROGRAM

This is a decision on the petition under 37 CFR 1.102, filed on February 22, 2011, to make the above-identified application special under the pilot program for applications pertaining to Green Technologies as set forth 74 Federal Register Notice 64666 (December 8, 2009) and amended by 75 Federal Register Notice 28554 (May 21, 2010) and 75 Federal Register Notice 69049 (November 10, 2010).

The petition is **GRANTED**.

A grantable petition to make an application special under 37 CFR 1.102 and the pilot program as set forth in 74 FR 64666 must be directed to a nonprovisional application filed under 35 USC 111(a) or be a national stage entry under 35 USC 371, exclusive of any reissue applications.

In order to qualify for special status, the following requirements must be met. 1) The application must have no more than 3 independent claims and no more than 20 total claims. 2) The application must not contain any multiple dependent claims. 3) The petition must state the basis for seeking special status, i.e., the claimed invention either: A) materially enhances the quality of the environment or B) materially contributes to: i) the discovery or development of renewable energy resources, ii) the more efficient utilization and conservation of energy resources, or iii) greenhouse gas emission reduction. 4) If the disclosure is not clear on its face that the claimed invention materially contributes under category (A) or (B), the petition must be accompanied by a statement by the applicant, assignee, or an attorney/agent registered to practice before the Office explaining how the materiality standard is met. 5) A statement that applicant will agree to make an election without traverse in a telephonic interview if a restriction requirement is made by the examiner. 6) The petition to make special must be filed electronically. 7) The petition must be filed at least one day prior to the date that a first Office Action appears in the Patent Application Information Retrieval (PAIR) system. 8) The petition must be accompanied by a request for early publication in compliance with 37 CFR 1.219 and include the publication fee as set forth in 37 CFR 1.18(d).

The requirement for a fee for consideration of the petition to make special for applications pertaining to Green Technologies has been waived.

The instant petition complies with items 1 – 8 above. Accordingly, the above-identified application has been accorded "special" status.

Telephone inquires concerning this decision should be directed to Lee W. Young at 571-272-4549.

The application is being forwarded to the Technology Center Art Unit 2875 for action in its regular turn.

Lee W. Young
Quality Assurance Specialist
Technology Center 2800

UNITED STATES PATENT AND TRADEMARK OFFICE

UNITED STATES DEPARTMENT OF COMMERCE
United States Patent and Trademark Office
Address: COMMISSIONER FOR PATENTS
P.O. Box 1450
Alexandria, Virginia 22313-1450
www.uspto.gov

APPLICATION NO.	FILING DATE	FIRST NAMED INVENTOR	ATTORNEY DOCKET NO.	CONFIRMATION NO.
13/032,528	02/22/2011	Christopher M. Hanna	56233-479 (THTK-3DVCON4)	7063

23630 7590 03/31/2011
McDermott Will & Emery
600 13th Street, NW
Washington, DC 20005-3096

EXAMINER

ART UNIT	PAPER NUMBER
2482	

NOTIFICATION DATE	DELIVERY MODE
03/31/2011	ELECTRONIC

Please find below and/or attached an Office communication concerning this application or proceeding.

The time period for reply, if any, is set in the attached communication.

Notice of the Office communication was sent electronically on above-indicated "Notification Date" to the following e-mail address(es):

mweipdocket@mwe.com

UNITED STATES PATENT AND TRADEMARK OFFICE

Commissioner for Patents
United States Patent and Trademark Office
P.O. Box 1450
Alexandria, VA 22313-1450
www.uspto.gov

McDermott Will & Emery
600 13th Street, NW
Washington DC 20005-3096

In re Application of: HANNA, CHRISTOPHER M. Serial No.: 13/032,528 Filed: February 22, 2011 Title: **BTSC ENCODER**	DECISION ON PETITION TO MAKE SPECIAL FOR NEW APPLICATION UNDER 37 C.F.R. § 1.102 & M.P.E.P. § 708.02

This is a decision on the petition filed on February 22, 2011 to make the above-identified application special for accelerated examination procedure under 37 C.F.R. § 1.102(d).

The petition to make the application special is **DISMISSED**.

REGULATION AND PRACTICE

A grantable petition to make special under 37 C.F.R. § 1.102(d) and pursuant to the "Change to Practice for Petitions in Patent Applications to Make Special and for Accelerated Examination" published in the Federal Register on June 26, 2006 (71 Fed. Reg. 36323), must satisfy the following conditions:

I. Conditions Regarding the Application:

1. the application must be a non-reissue utility or design application filed under 37 CFR 1.111(a);
2. the application, the petition and the required fees must be filed electronically using the USPTO's electronic filing system (EFS), or EFS-web; if not filed electronically, a statement asserting that EFS and EFS-web were not available during the normal business hours.
3. at the time of filing, the application must be complete under 37 CFR 1.51 and in condition for examination;
4. the application must contain three or fewer independent claims and twenty or fewer total claims and the claims must be directed to a single invention.

II. Conditions Regarding the Petition:

The petition must:

1. be filed with the application;

2. include a statement that applicant agrees not to separately argue the patentability of any independent claim during any appeal in the application;

3. include a statement that applicant agrees to make an election without traverse in a telephone interview.

4. include a statement that applicant agrees to conduct such an interview when requested by the examiner.

5. include a statement, made based on a good faith belief, that a preexamination search in compliance with the following requirements, was conducted, including an identification of the filed of search by United States class and subclass, where applicable, and for database searches, the search logic or chemical structure or sequence used as a query, the name of the file(s) searched and the database service, and the date of the search.

The preexamination search must:

5.1 involve U.S. patents and patent application publications, foreign patent documents, and non-patent literature, unless the applicant can justify with reasonable certainty that no references more pertinent than those already identified are likely to be found in the eliminated sources and includes such a justification with this statement;

5.2. be directed to the claimed invention and encompass all of the features of the claims, giving the claims the broadest reasonable interpretation;

5.3. encompass the disclosed features that may be claimed.

6. must provide in support of the petition an accelerated examination support document. An accelerated examination support document must include:

6.1. an information disclosure statement (IDS) in compliance with 37 CFR 1.98 citing each reference deemed most closely related to the subject matter of each of the claims;

6.2. an identification of all the limitations in the claims that are disclosed by the reference specifying where the limitation is disclosed in the cited reference;

6.3. a detailed explanation of how each of the claims are patentable over the references cited with particularity required by 37 CFR 1.111(b) and (c);

6.4. a concise statement of the utility of the invention as defined in each of the independent claims (unless the application is a design application);

6.5. a showing of where each limitation of the claims finds support under 35 USC 112, first paragraph, in the written description of the specification. If applicable, the showing must also identify: (1) each means- (or step) plus-function claim element that invokes consideration under 35 USC 112, sixth paragraph; and (2) the structure, material, or acts in the specification that corresponds to each means- (or step) plus-function claim element that invokes consideration under 35 USC 112, sixth paragraph; if the application claims the benefit of one or more applications under title 35, United States Code, the showing must also include where each limitation of the claims finds support under 35 USC 112, first paragraph, in each such application in which such supports exists;

6.6. an identification of any cited references that may be disqualified under 35 USC 103(c).

REVIEW OF FACTS

The conditions set forth under section I. above are considered to have been met. However, the petition fails to comply with conditions set forth under section II. Item 6.5.

Regarding the requirement in item 6.5 above, the "Accelerated Examination Support Document", is deficient because section 9(F) fails to include a showing of where ***each limitation of each of the claims*** find support under the first paragraph of 35 USC 112 in the written description of the instant specification. Petitioner presents each claim and after each claim identifies broadly multiple paragraphs of the specification along with multiple figures without providing any indication of a showing where each specific claim limitation finds support in those multiple paragraphs and figures cited. Clarification is required.

Also regarding the requirement in item 6.5 above, the "Accelerated Examination Support Document", is deficient because it fails to include a showing of where ***each limitation of the claims*** finds support under the first paragraph of 35 USC 112 in the written description of ***each benefit application***. As set forth supra, "*if the application claims the benefit of one or more applications under title 35, United States Code, the showing must also include where each limitation of the claims finds support under 35 USC 112, first paragraph,* ***in each such application in which such supports exists***". It is noted, the instant application also claims benefit to parent applications 13/011,396; 09/638,245; 09/041,244 and 09/661,412. The petitioner has not provided a showing of support for each of these benefit applications. Therefore, an updated accelerated examination support document must be provided which shows where each limitation of the claims finds support in each of these benefit applications as well.

DECISION

For the above-stated reasons, the petition is **dismissed**. The application will therefore be taken up by the examiner for action in its regular turn.

Petitioner is given a single opportunity to perfect the petition. Any request for reconsideration of this decision must be submitted within 1 (one) month or 30 (thirty) days, whichever is longer, (no extension of time under 37 CFR 1.136(a)) from the date of this decision in order to be considered timely. Any request for reconsideration must address the deficiencies indicated above.

Petitioner is reminded that, upon granting of the special status of the application on request for reconsideration, the application will be processed expeditiously. However, due to the dismissal of the instant petition, examination may not be completed within twelve months of the filing date of the application.

Any inquiry regarding this decision should be directed to Michael Horabik, Quality Assurance Specialist, at (571) 272-3068.

/Michael Horabik/

Michael Horabik
Quality Assurance Specialist
Technology Center 2600
Communications

UNITED STATES PATENT AND TRADEMARK OFFICE

UNITED STATES DEPARTMENT OF COMMERCE
United States Patent and Trademark Office
Address: COMMISSIONER FOR PATENTS
P.O. Box 1450
Alexandria, Virginia 22313-1450
www.uspto.gov

APPLICATION NO.	FILING DATE	FIRST NAMED INVENTOR	ATTORNEY DOCKET NO.	CONFIRMATION NO.
13/032,528	02/22/2011	Christopher M. Hanna	56233-479 (THTK-3DVCON4)	7063

23630 7590 05/27/2011
McDermott Will & Emery
600 13th Street, NW
Washington, DC 20005-3096

EXAMINER
LEE, PING

ART UNIT	PAPER NUMBER
2614	

NOTIFICATION DATE	DELIVERY MODE
05/27/2011	ELECTRONIC

Please find below and/or attached an Office communication concerning this application or proceeding.

The time period for reply, if any, is set in the attached communication.

Notice of the Office communication was sent electronically on above-indicated "Notification Date" to the following e-mail address(es):

mweipdocket@mwe.com

United States Patent and Trademark Office

~~Commissioner for Patents~~
United States Patent and Trademark Office
P.O. Box 1450
Alexandria, VA 22313-1450
www.uspto.gov

McDermott Will & Emery
600 13th Street, NW
Washington DC 20005-3096

In re Application of: HANNA, CHRISTOPHER M. Serial No.: 13/032,528 Filed: February 22, 2011 Attorney Docket No: 56233-479 (THTK-3DVCON4) Title: **BTSC ENCODER**	DECISION ON PETITION TO MAKE SPECIAL FOR NEW APPLICATION UNDER 37 C.F.R. § 1.102 & M.P.E.P. § 708.02

This is a decision on the petition filed on April 29, 2011 requesting reconsideration to make the above-identified application special for accelerated examination procedure under 37 C.F.R. § 1.102(d).

All of the requirements to correct the deficiencies outlined in the petition decision mailed March 31, 2011 have been met.

The petition to make the application special is **GRANTED**.

The application is eligible for accelerated examination and the petition complies with the conditions for granting the application special status pursuant to the "Change to Practice for Petitions in Patent Applications to Make Special and for Accelerated Examination" published June 26, 2006, in the Federal Register. (71 Fed. Reg. 36323).

The prosecution of the instant application will be conducted expeditiously according to the following guidelines.

1. The application will be docketed to an examiner and taken up for action within two weeks of the date of this decision.

2. Restriction Practice:
   If the examiner determines that the claims are not directed to a single invention, a telephone request to elect one single invention will be made pursuant to MPEP 812.01. As a prerequisite to the grant of this petition, the applicant has agreed to make an oral election, by telephone, without traverse. If the applicant refuses to make an election without traverse, or the examiner cannot reach the applicant after a reasonable effort, the examiner will treat the first claimed invention (invention defined by claim 1) as having being constructively elected without traverse for examination.

3. Office action:
   If it is determined that, after appropriate consultation, there is a potential rejection or any other issue to be addressed, the examiner will telephone the applicant and arrange an interview to discuss and resolve the issue. An Office action, other than a Notice of Allowance and Fee(s) Due (Notice of Allowance), will not be issued unless either: 1) an interview was conducted but did not result in agreed to action that places the application in condition for allowance, or, 2) a determination is made that an interview would be unlikely to result in the application being placed in condition for allowance, and 3) an internal conference has been held to review any rejection of any claim.

4. Time for Reply:
   An Office action other than a Notice of Allowance or a final Office action will set a shortened statutory period of one month or thirty days, whichever is longer, for reply with no extension of time available under 37 CFR 1.136(a). Failure to timely file a reply within this non-extendible period for reply will result in the abandonment of the application.

5. Reply by Applicant:
   A timely reply to an Office action other than the Notice of Allowance must be submitted electronically via EFS or EFS-web and limited to addressing the rejections, objections and requirement made. Any amendment that attempts to: 1) add claims which would result in more than three pending independent claims or more than twenty pending total claims; 2) present claims not encompassed by the pre-examination search or an updated accelerated examination support document; or 3) present claims that are directed a non-elected invention or an invention other than that previously claimed and examined in the application, will be treated as not fully responsive and will not be entered.

   For any amendment to the claims (including any new claim) that is not encompassed by the accelerated examination support document, applicant must provide an updated accelerated examination support document that encompasses the amended or new claims at the time of filing of the amendment.

   To proceed expeditiously with the examination, it is recommended that a reply with amendments made to any claim or with any new claim being added be accompanied by an updated accelerated examination support document or a statement explaining how the amended or new claim is supported by the original accelerated examination support document.

6. Information Disclosure Statement (IDS):
   Any IDS filed during prosecution must be submitted electronically via EFS or EFS-web, accompanied by an updated accelerated examination support document, and be in compliance with 37 CFR 1.97 and 1.98.

7. Post-Allowance Processing:
   To expedite processing of the allowed application into a patent, the applicant must: 1) pay the required fees within one month of the date of the Notice of Allowance, and 2) not file any post allowance papers not required by the Office. In no event may the issue fee be paid and accepted later than three months from the date of the Notice of Allowance.

8. After-Final and Appeal Procedures:
   To expedite prosecution, after receiving the final Office action, applicant must: 1) promptly file a notice of appeal, an appeal brief and appeal fees; and 2) not request a pre-appeal brief conference.

   Any amendment, affidavit or other evidence filed after final Office action must comply with applicable rules and the requirements outlined in numbered paragraphs 5 and 6 above.

   On appeal, the application will proceed according to normal appeal procedures. After appeal, the application will again be treated special.

9. Proceedings Outside the Normal Examination Process:
   If the application becomes involved in a proceeding that is outside the normal examination process (e.g., a secrecy order, national security review, interference proceeding, petitions under 37 CFR 1.181, 182 or 183), the application will be treated special before and after such proceeding.

10. Final Disposition:
    The twelve month goal of this accelerated examination procedure ends with a final disposition. The mailing of a final Office action, a Notice of Allowance, the filing of a Notice of Appeal, or the filing of a Request for Continued Examination (RCE) is the final disposition.

If, during prosecution, a paper is not filed electronically using EFS-web, a reply is filed but is not fully responsive, the application is involved in an appeal or a proceeding outside normal examination process, the application will still be examined expeditiously, however, the final disposition may occur more than twelve months from the filing of the application.

Any inquiry regarding this decision should be directed to Michael Horabik, Quality Assurance Specialist, at (571) 272-3068.

/Michael Horabik/

Michael Horabik
Quality Assurance Specialist
Technology Center 2600
Communications

UNITED STATES PATENT AND TRADEMARK OFFICE

Commissioner for Patents
United States Patent and Trademark Office
P.O. Box 1450
Alexandria, VA 22313-1450
www.uspto.gov

In re Application of
Martin Annis

Application No. 13032572

Filed:

Attorney Docket No. ANNII41146

:DECISION ON PETITION TO MAKE SPECIAL
:UNDER 37 CFR 1.102(c)(1)

This is a decision on the electronic petition under 37 CFR 1.102 (c)(1), filed 23-FEB-2011 to make the above-identified application special based on applicant's age as set forth in MPEP § 708.02, Section IV.

The petition is **GRANTED**.

A grantable petition to make an application special under 37 CFR 1.102(c)(1), MPEP § 708.02, Section IV: Applicant's Age must include a statement by applicant or a registered practitioner having evidence that applicant is at least 65 years of age. No fee is required.

Accordingly, the above-identified application has been accorded "special" status and will be taken up for action by the examiner upon the completion of all pre-examination processing.

Telephone inquiries concerning this electronic decision should be directed to the Electronic Business Center at 866-217-9197.

All other inquiries concerning either the examination or status of the application should be directed to the Technology Center.

UNITED STATES PATENT AND TRADEMARK OFFICE

Commissioner for Patents
United States Patent and Trademark Office
P.O. Box 1450
Alexandria, VA 22313-1450
www.uspto.gov

HUFFMAN LAW GROUP, P.C.
1900 MESA AVE.
COLORADO SPRINGS CO 80906

MAILED
OCT 07 2011
OFFICE OF PETITIONS

In re Application of	:	
Randy C. Willig et al.	:	
Application No. 13/032,622	:	DECISION ON PETITION
Filed: February 22, 2011	:	
Attorney Docket No. ENER.0103	:	

This is a decision on the petition under the unintentional provisions of 37 CFR 1.137(b), filed September 30, 2011, to revive the above-identified application.

The petition is **GRANTED**.

The application became abandoned for failure to reply in a timely manner to the Notice to File Missing Parts of Non-Provisional Application (Notice), mailed March 9, 2011. The Notice set a period for reply of two (2) months from the mail date of the Notice. No extensions of time under the provisions of 37 CFR 1.136(a) was obtained. Accordingly, the application became abandoned on May 10, 2011.

The petition satisfies the requirements of 37 CFR 1.137(b) in that petitioner has supplied (1) the reply in the form of an oath and declaration, surcharge fee of $130, basic filing fee of $380, search fee of $620, examination fee of $250, and excess claim fee of $120, (2) the petition fee of $1,860, and (3) a proper statement of unintentional delay. Accordingly the oath and declaration fees are accepted as being unintentionally delayed.

Telephone inquiries concerning this decision should be directed to Kimberly Inabinet at (571) 272-4618.

This application is being referred to the Office of Patent Application Processing for appropriate action in the normal course of business on the reply received September 30, 2011. Inquires regarding the status of the application should be directed to 571-272-4000.

/Kimberly Inabinet/

Kimberly Inabinet
Petitions Examiner
Office of Petitions

UNITED STATES PATENT AND TRADEMARK OFFICE

Commissioner for Patents
United States Patent and Trademark Office
P.O. Box 1450
Alexandria, VA 22313-1450
www.uspto.gov

Caven & Aghevli LLC
c/o CPA Global
P.O. BOX 52050
MINNEAPOLIS MN 55402

MAILED

MAR 09 2012

OFFICE OF PETITIONS

In re Application of
Slattery et al.
Application No. 13/032,633
Filed: February 22, 2011
Attorney Docket No. P24504C

DECISION ON PETITION

This is a decision on the petition under the unintentional provisions of 37 CFR 1.137(b), filed February 2, 2012, to revive the above-identified application.

The petition is **GRANTED**.

This application became abandoned for failure to timely pay the issue and publication fees on or before January 4, 2012, as required by the Notice of Allowance and Fee(s) Due, mailed October 4, 2011. Accordingly, the date of abandonment of this application is January 5, 2012.

The petition satisfies the requirements of 37 CFR 1.137(b) in that petitioner has supplied (1) the reply in the form of payment of the issue fee of $1,740.00 and the publication fee of $300.00, (2) the petition fee of $1,860.00; and (3) a proper statement of unintentional delay.

Telephone inquiries concerning this decision should be directed to the undersigned at (571) 272-3230.

This application is being referred to the Office of Data Management for processing into a patent.

Shirene Willis Brantley

Shirene Willis Brantley
Senior Petitions Attorney
Office of Petitions

UNITED STATES PATENT AND TRADEMARK OFFICE

Commissioner for Patents
United States Patent and Trademark Office
P.O. Box 1450
Alexandria, VA 22313-1450
www.uspto.gov

Altis Law Group, Inc.
ATTN: Steven Reiss
288 South Mayo Avenue
City Of Industry, CA 91789

MAILED

AUG 12 2011

OFFICE OF PETITIONS

In re Application of	:	
Ping-Yang Chuang, et. al.	:	
Application No. 13/032,645	:	DECISION ON PETITION
Filed: February 23, 2011	:	UNDER 37 CFR 1.55(c)
Attorney Docket No. US33755	:	

This is a decision on the petition under 37 CFR 1.55(a)(1) filed May 24, 2011, which is being treated as a petition under 37 CFR 1.55(c), to accept an unintentionally delayed claim under 35 U.S.C. § 119(a)-(d) for the benefit of priority to foreign Taiwan Application Nos. 99120971 filed June 25, 2010, and 99140744 filed on November 25, 2010.

The petition is **DISMISSED AS MOOT**.

The pending nonprovisional application was filed after November 29, 2000, and included a reference to the foreign applications, for which benefit is sought, within the later of four months from the actual filing date of the application and within sixteen months from the filing date of the prior foreign application. Therefore, since the claim for priority was submitted within the period specified in 37 CFR 1.55(a)(1)(i), the present petition is unnecessary.

A corrected Filing Receipt, which includes the priority claim to the prior-filed foreign applications, accompanies this decision on petition.

This application is being referred to Technology Center Art Unit 2612 for examination in due course.

Any questions concerning this decision on petition may be directed to the undersigned at (571) 272-3226. All other inquiries concerning the processing of the application should be addressed to Technology Center Art Unit 2612 at (571) 272-2600.

Andrea Smith
Petitions Examiner
Office of Petitions

UNITED STATES PATENT AND TRADEMARK OFFICE

UNITED STATES DEPARTMENT OF COMMERCE
United States Patent and Trademark Office
Address: COMMISSIONER FOR PATENTS
P.O. Box 1450
Alexandria, Virginia 22313-1450
www.uspto.gov

APPLICATION NUMBER	FILING or 371(c) DATE	GRP ART UNIT	FIL FEE REC'D	ATTY.DOCKET.NO	TOT CLAIMS	IND CLAIMS
13/032,645	02/23/2011	2612	1310	US33755	13	4

CONFIRMATION NO. 7321

CORRECTED FILING RECEIPT

OC000000049166218

54000
Altis Law Group, Inc.
ATTN: Steven Reiss
288 SOUTH MAYO AVENUE
CITY OF INDUSTRY, CA 91789

Date Mailed: 08/08/2011

Receipt is acknowledged of this non-provisional patent application. The application will be taken up for examination in due course. Applicant will be notified as to the results of the examination. Any correspondence concerning the application must include the following identification information: the U.S. APPLICATION NUMBER, FILING DATE, NAME OF APPLICANT, and TITLE OF INVENTION. Fees transmitted by check or draft are subject to collection. Please verify the accuracy of the data presented on this receipt. **If an error is noted on this Filing Receipt, please submit a written request for a Filing Receipt Correction. Please provide a copy of this Filing Receipt with the changes noted thereon. If you received a "Notice to File Missing Parts" for this application, please submit any corrections to this Filing Receipt with your reply to the Notice. When the USPTO processes the reply to the Notice, the USPTO will generate another Filing Receipt incorporating the requested corrections**

Applicant(s)

PING-YANG CHUANG, Tu-Cheng, TAIWAN;
YING-CHUAN YU, Tu-Cheng, TAIWAN;

Assignment For Published Patent Application

HON HAI PRECISION INDUSTRY CO., LTD., Tu-Cheng, TAIWAN

Power of Attorney: The patent practitioners associated with Customer Number 54000

Domestic Priority data as claimed by applicant

Foreign Applications (You may be eligible to benefit from the **Patent Prosecution Highway** program at the USPTO. Please see http://www.uspto.gov for more information.)
TAIWAN 99120971 06/25/2010
TAIWAN 99140744 11/25/2010

If Required, Foreign Filing License Granted: 03/07/2011

The country code and number of your priority application, to be used for filing abroad under the Paris Convention, is **US 13/032,645**

Projected Publication Date: 12/29/2011

Non-Publication Request: No

Early Publication Request: No

Title

ELECTRONIC DEVICE WITH AUTOMATIC NOTIFICATION FUNCTION FOR PERSONAL EMERGENCY AND METHOD THEREOF

Preliminary Class

340

PROTECTING YOUR INVENTION OUTSIDE THE UNITED STATES

Since the rights granted by a U.S. patent extend only throughout the territory of the United States and have no effect in a foreign country, an inventor who wishes patent protection in another country must apply for a patent in a specific country or in regional patent offices. Applicants may wish to consider the filing of an international application under the Patent Cooperation Treaty (PCT). An international (PCT) application generally has the same effect as a regular national patent application in each PCT-member country. The PCT process **simplifies** the filing of patent applications on the same invention in member countries, but **does not result** in a grant of "an international patent" and does not eliminate the need of applicants to file additional documents and fees in countries where patent protection is desired.

Almost every country has its own patent law, and a person desiring a patent in a particular country must make an application for patent in that country in accordance with its particular laws. Since the laws of many countries differ in various respects from the patent law of the United States, applicants are advised to seek guidance from specific foreign countries to ensure that patent rights are not lost prematurely.

Applicants also are advised that in the case of inventions made in the United States, the Director of the USPTO must issue a license before applicants can apply for a patent in a foreign country. The filing of a U.S. patent application serves as a request for a foreign filing license. The application's filing receipt contains further information and guidance as to the status of applicant's license for foreign filing.

Applicants may wish to consult the USPTO booklet, "General Information Concerning Patents" (specifically, the section entitled "Treaties and Foreign Patents") for more information on timeframes and deadlines for filing foreign patent applications. The guide is available either by contacting the USPTO Contact Center at 800-786-9199, or it can be viewed on the USPTO website at http://www.uspto.gov/web/offices/pac/doc/general/index.html.

For information on preventing theft of your intellectual property (patents, trademarks and copyrights), you may wish to consult the U.S. Government website, http://www.stopfakes.gov. Part of a Department of Commerce initiative, this website includes self-help "toolkits" giving innovators guidance on how to protect intellectual property in specific countries such as China, Korea and Mexico. For questions regarding patent enforcement issues, applicants may call the U.S. Government hotline at 1-866-999-HALT (1-866-999-4158).

LICENSE FOR FOREIGN FILING UNDER

Title 35, United States Code, Section 184

Title 37, Code of Federal Regulations, 5.11 & 5.15

GRANTED

The applicant has been granted a license under 35 U.S.C. 184, if the phrase "IF REQUIRED, FOREIGN FILING LICENSE GRANTED" followed by a date appears on this form. Such licenses are issued in all applications where

the conditions for issuance of a license have been met, regardless of whether or not a license may be required as set forth in 37 CFR 5.15. The scope and limitations of this license are set forth in 37 CFR 5.15(a) unless an earlier license has been issued under 37 CFR 5.15(b). The license is subject to revocation upon written notification. The date indicated is the effective date of the license, unless an earlier license of similar scope has been granted under 37 CFR 5.13 or 5.14.

This license is to be retained by the licensee and may be used at any time on or after the effective date thereof unless it is revoked. This license is automatically transferred to any related applications(s) filed under 37 CFR 1.53(d). This license is not retroactive.

The grant of a license does not in any way lessen the responsibility of a licensee for the security of the subject matter as imposed by any Government contract or the provisions of existing laws relating to espionage and the national security or the export of technical data. Licensees should apprise themselves of current regulations especially with respect to certain countries, of other agencies, particularly the Office of Defense Trade Controls, Department of State (with respect to Arms, Munitions and Implements of War (22 CFR 121-128)); the Bureau of Industry and Security, Department of Commerce (15 CFR parts 730-774); the Office of Foreign AssetsControl, Department of Treasury (31 CFR Parts 500+) and the Department of Energy.

NOT GRANTED

No license under 35 U.S.C. 184 has been granted at this time, if the phrase "IF REQUIRED, FOREIGN FILING LICENSE GRANTED" DOES NOT appear on this form. Applicant may still petition for a license under 37 CFR 5.12, if a license is desired before the expiration of 6 months from the filing date of the application. If 6 months has lapsed from the filing date of this application and the licensee has not received any indication of a secrecy order under 35 U.S.C. 181, the licensee may foreign file the application pursuant to 37 CFR 5.15(b).

UNITED STATES PATENT AND TRADEMARK OFFICE

Commissioner for Patents
United States Patent and Trademark Office
P.O. Box 1450
Alexandria, VA 22313-1450
www.uspto.gov

VAN DYKE, GARDNER, LINN & BURKHART, LLP
SUITE 207
2851 CHARLEVOIX DRIVE, S.E.
GRAND RAPIDS MI 49546

MAILED
APR 04 2011
OFFICE OF PETITIONS

In re Application of	:	
Frederick C. Hamilton	:	
Application No. 13/032,745	:	DECISION ON PETITION
Filed: February 23, 2011	:	TO MAKE SPECIAL UNDER
Attorney Docket No. HAM02 P-100A	:	37 CFR 1.102(c)(1)
	:	

This is a decision on the petition under 37 CFR 1.102(c)(1), filed February 23, 2011, to make the above-identified application special based on applicant's age as set forth in M.P.E.P. § 708.02, Section IV.

The petition is **GRANTED**.

A grantable petition to make an application special under 37 CFR 1.102(c)(1) and MPEP § 708.02, Section IV: Applicant's Age must be accompanied by evidence showing that at least one of the applicants is 65 years of age, or more, such as a birth certificate or a statement by applicant. No fee is required

The instant petition includes a statement from the attorney of record declaring that he/she is in possession of evidence that shows that the applicant is 65 years of age or older. Accordingly, the above-identified application has been accorded "special" status.

Telephone inquiries concerning this decision should be directed to Terri Johnson at 571-272-2991.

All other inquiries concerning either the examination or status of the application should be directed to the Technology Center.

The application is being forwarded to the Technology Center Art Unit 3764 for action on the merits commensurate with this decision.

/Terri Johnson/
Terri Johnson
Petitions Examiner
Office of Petitions

UNITED STATES PATENT AND TRADEMARK OFFICE

Commissioner for Patents
United States Patent and Trademark Office
P.O. Box 1450
Alexandria, VA 22313-1450
www.uspto.gov

NIXON & VANDERHYE, PC
901 NORTH GLEBE ROAD, 11TH FLOOR
ARLINGTON VA 22203

MAILED

OCT 03 2011

OFFICE OF PETITIONS

In re Application of :
Vanderplancke,e t al. :
Application No. 13/032,825 : NOTICE
Filed: February 23, 2011 :
Attorney Docket No. BHD-5657-3 :

This is a notice regarding your request for acceptance of a fee deficiency submission under 37 CFR 1.28(c), filed September 20, 2011.

The Office no longer investigates or rejects original or reissue applications under 37 CFR 1.56. **1098 Off. Gaz. Pat. Office 502 (January 3, 1989)**. Therefore, nothing in this Notice is intended to imply that an investigation was done.

Your fee deficiency submission under 37 CFR 1.28 is hereby **ACCEPTED**.

This application is no longer entitled to small entity status. Accordingly, all future fees paid in this application must be paid at the large entity rate.

Inquiries related to this communication should be directed to the undersigned at (571) 272-3230.

Shirene Willis Brantley
Senior Petitions Attorney
Office of Petitions

UNITED STATES PATENT AND TRADEMARK OFFICE

Commissioner for Patents
United States Patent and Trademark Office
P.O. Box 1450
Alexandria, VA 22313-1450
www.uspto.gov

HUSCH BLACKWELL LLP
HUSCH BLACKWELL SANDERS LLP WELSH & KATZ
120 S RIVERSIDE PLAZA
22ND FLOOR
CHICAGO, IL 60606

MAILED
SEP 12 2011
OFFICE OF PETITIONS

In re Application of	:	
Hajime Kimura., et al.	:	
Application No.: 13/032,829	:	ON PETITION
Filed: February 23, 2011	:	
Attorney Docket No.: 0553-0512.01	:	

This is a decision on the petition, filed September 8, 2011, under 37 CFR 1.313(c)(2) to withdraw the above-identified application from issue after payment of the issue fee.

The petition is **GRANTED**.

The above-identified application is withdrawn from issue for consideration of a submission under 37 CFR 1.114 (request for continued examination). See 37 CFR 1.313(c)(2).

Petitioner is advised that the issue fee paid on August 4, 2011, cannot be refunded. If, however, this application is again allowed, petitioner may request that it be applied towards the issue fee required by the new Notice of Allowance.[1]

Telephone inquiries relating to this decision should be directed to the undersigned at (571) 272-3204.

The application is being referred to Technology Center AU 2874 for further processing of the request for continued examination under 37 CFR 1.114 and for consideration of the concurrently filed amendment.

/SDB/

Sherry D. Brinkley
Petitions Examiner
Office of Petitions

[1] *The request to apply the issue fee to the new Notice may be satisfied by completing and returning the new Part B – Fee(s) Transmittal Form (along with any balance due at the time of submission). Petitioner is advised that the Issue Fee Transmittal Form must be completed and timely submitted to avoid abandonment of the application.*

UNITED STATES PATENT AND TRADEMARK OFFICE

Commissioner for Patents
United States Patent and Trademark Office
P.O. Box 1450
Alexandria, VA 22313-1450
www.uspto.gov

MAILED

MAY 25 2011

OFFICE OF PETITIONS

CORNING INCORPORATED
SP-TI-3-1
CORNING NY 14831

In re Application of	:	
Philippe J. Barthe	:	
Application No. 13/032,881	:	DECISION REFUSING STATUS
Filed: February 23, 2011	:	UNDER 37 CFR 1.47(b)
Attorney Docket No. SP10-037	:	

This is in response to the petition under 37 CFR 1.47(b), filed May 9, 2011.

The petition under 37 CFR 1.47(b) is **DISMISSED**.

Rule 47 applicant is given TWO MONTHS from the mailing date of this decision to reply, correcting the below-noted deficiencies. Any reply should be entitled "Request for Reconsideration of Petition Under 37 C.F.R. § 1.47(b)," and should only address the deficiencies noted below, except that the reply may include an oath or declaration executed by the non-signing inventor. **Failure to respond will result in abandonment of the application.** Any extensions of time will be governed by 37 C.F.R. § 1.136(a).

A grantable petition under 37 CFR 1.47(b) requires: (1) proof that the non-signing inventor cannot be reached or refuses to sign the oath or declaration after having been presented with the application papers (specification, claims and drawings); (2) an acceptable oath or declaration in compliance with 37 CFR 1.63; (3) the petition fee; (4) a statement of the last known address of the non-signing inventor; (5) proof that the Rule 47(b) applicant has sufficient proprietary interest in the subject matter to justify the filing of the application; and (6) proof of irreparable damage. The instant petition does not satisfy requirements (2), (5), and (6) above.

As to requirement (2), Rule 47 applicant has not submitted an executed oath or declaration. Rather, the declaration submitted was left blank. As set forth in MPEP 409.03(b), the "37 CFR 1.47(b) applicant must make the oath required by 37 CFR 1.63 and 1.64 or 1.175." The title or position of the person signing must be stated if signing on behalf of a corporation. Where a corporation is the 37 CFR 1.47(b) applicant, an officer (President, Vice-President, Secretary, Treasurer, or Chief Executive Officer) thereof should normally sign the necessary oath or declaration. A corporation may authorize any person, including a registered attorney or agent, to sign the oath or declaration on its behalf. Where an oath or declaration is signed by a registered attorney or agent on behalf of a corporation, proof of the attorney's or agent's authority in the form of a statement signed by the appropriate corporate officer must be submitted (i.e. by submitting a Rule 3.73(b) statement), or the attorney or agent can simply state that he or she is authorized to sign on behalf of the corporation.

As to requirement (5), applicant has not shown a sufficient proprietary interest with respect to nonsigning inventor Jung. Rule 47 applicant has not submitted a copy of an assignment from the non-signing inventor or a copy of an employment agreement.

If applicant can not show a sufficient proprietary interest by supplying a copy of the assignment for the above-identified application (or a copy of an agreement to assign, e.g. an employment agreement), a proprietary interest "may be demonstrated by an appropriate legal memorandum to the effect that a court of competent jurisdiction (federal, state, or foreign) would by the weight of authority in that jurisdiction award title of the invention to the 37 CFR 1.47(b) applicant."[1]

As to requirement (6), irreparable damage may be established by a statement that a filing date is necessary to preserve the rights of the party or to prevent irreparable damage. See MPEP 409.03(g).

The $200 petition fee has been charged to Deposit Account No. 03-3325, as authorized.

Further correspondence with respect to this matter should be addressed as follows:

---

[1] MPEP 409.03(f).

By mail: Mail Stop Petitions
Commissioner for Patents
P.O. Box 1450
Alexandria VA 22313-1450

By FAX: (571)273-8300
Attn: Office of Petitions

Telephone inquiries related to this decision may be directed to the undersigned at (571)272-3207.

Cliff Congo
Petitions Attorney
Office of Petitions

UNITED STATES PATENT AND TRADEMARK OFFICE

Commissioner for Patents
United States Patent and Trademark Office
P.O. Box 1450
Alexandria, VA 22313-1450
www.uspto.gov

MAILED

JUL 19 2011

OFFICE OF PETITIONS

CORNING INCORPORATED
SP-TI-3-1
CORNING NY 14831

In re Application of	:	
Philippe J. Barthe	:	
Application No. 13/032,881	:	DECISION REFUSING STATUS
Filed: February 23, 2011	:	UNDER 37 CFR 1.47(b)
Attorney Docket No. SP10-037	:	

This is in response to the renewed petition under 37 CFR 1.47(b), filed July 12, 2011.

The petition under 37 CFR 1.47(b) is **DISMISSED**.

Rule 47 applicant is given TWO MONTHS from the mailing date of this decision to reply, correcting the below-noted deficiencies. Any reply should be entitled "Request for Reconsideration of Petition Under 37 C.F.R. § 1.47(b)," and should only address the deficiencies noted below, except that the reply may include an oath or declaration executed by the non-signing inventor. **Failure to respond will result in abandonment of the application.** Any extensions of time will be governed by 37 C.F.R. § 1.136(a). No additional petition fee is due on renewed petition.

A grantable petition under 37 CFR 1.47(b) requires: (1) proof that the non-signing inventor cannot be reached or refuses to sign the oath or declaration after having been presented with the application papers (specification, claims and drawings); (2) an acceptable oath or declaration in compliance with 37 CFR 1.63; (3) the petition fee; (4) a statement of the last known address of the non-signing inventor; (5) proof that the Rule 47(b) applicant has sufficient proprietary interest in the subject matter to justify the filing of the application; and (6) proof of irreparable damage. The instant petition does not satisfy requirement (2).

As to requirement (2), Rule 47 applicant has not submitted a proper oath or declaration. The declaration was executed by Mark W. Lauroesch. However, it is not clear if Lauroesch is an officer of the assignee corporation, or if Lauroesch is a registered attorney or agent. As set forth in MPEP 409.03(b), the "37 CFR 1.47(b) applicant must make the oath required by 37 CFR 1.63 and 1.64 or 1.175." **The title or position of the person signing must be stated if signing on behalf of a corporation.** Where a corporation is the 37 CFR 1.47(b) applicant, an officer (President, Vice-President, Secretary, Treasurer, or Chief Executive Officer) thereof should normally sign the necessary oath or declaration. A corporation may authorize any person, including a registered attorney or agent, to sign the oath or declaration on its behalf. **Where an oath or declaration is signed by a registered attorney or agent on behalf of a corporation, proof of the attorney's or agent's authority in the form of a statement signed by the appropriate corporate officer must be submitted (i.e. by submitting a Rule 3.73(b) statement), or the attorney or agent can simply state that he or she is authorized to sign on behalf of the corporation** (emphasis added).

Accordingly, if Lauroesch is an officer of the corporation, his title must be given on the declaration. If Lauroesch is a registered attorney or agent, proof of his authority must be given, or he must state that he is authorized to sign on behalf of the corporation.

Rule 47 applicant submitted a petition fee of $200 petition fee. However, as no petition fee is due on renewed petition, this fee has been refunded to Deposit Account No. 03-3325.

Telephone inquiries related to this decision may be directed to the undersigned at (571)272-3207.

Cliff Congo
Petitions Attorney
Office of Petitions

UNITED STATES PATENT AND TRADEMARK OFFICE

Commissioner for Patents
United States Patent and Trademark Office
P.O. Box 1450
Alexandria, VA 22313-1450
www.uspto.gov

MAILED
AUG 02 2011
OFFICE OF PETITIONS

CORNING INCORPORATED
SP-TI-3-1
CORNING NY 14831

In re Application of	:	
Philippe J. Barthe	:	CORRECTED
Application No. 13/032,881	:	DECISION UNDER 37 CFR 1.47(b)
Filed: February 23, 2011	:	
Attorney Docket No. SP10-037	:	

This is in response to the renewed petition under 37 CFR 1.47(b), filed July 12, 2011. A previous decision dismissing the petition was mailed on July 19, 2011.

The petition under 37 CFR 1.47(b) is **GRANTED**.

The petition and declaration have been reviewed and determined to be in compliance with 37 C.F.R. § 1.47(b).

The application is hereby accorded Rule 47 status.

The application is being forwarded to the Office of Patent Application Processing for pre-examination processing.

Telephone inquiries related to this decision may be directed to the undersigned at (571)272-3207.

Cliff Congo
Petitions Attorney
Office of Petitions

UNITED STATES PATENT AND TRADEMARK OFFICE

UNITED STATES DEPARTMENT OF COMMERCE
United States Patent and Trademark Office
Address: COMMISSIONER FOR PATENTS
P.O. Box 1450
Alexandria, Virginia 22313-1450
www.uspto.gov

APPLICATION NO.	FILING DATE	FIRST NAMED INVENTOR	ATTORNEY DOCKET NO.	CONFIRMATION NO.
13/032,980	02/23/2011	Michael F. Pelly	69332-001US2	7979

22504 7590 03/01/2011
DAVIS WRIGHT TREMAINE, LLP/Seattle
1201 Third Avenue, Suite 2200
SEATTLE, WA 98101-3045

EXAMINER

ART UNIT	PAPER NUMBER
1621	

NOTIFICATION DATE	DELIVERY MODE
03/01/2011	ELECTRONIC

Please find below and/or attached an Office communication concerning this application or proceeding.

The time period for reply, if any, is set in the attached communication.

Notice of the Office communication was sent electronically on above-indicated "Notification Date" to the following e-mail address(es):

seapatentdocket@dwt.com

UNITED STATES PATENT AND TRADEMARK OFFICE

Commissioner for Patents
United States Patent and Trademark Office
P.O. Box 1450
Alexandria, VA 22313-1450
www.uspto.gov

MAR 0 1 2011

DAVIS WRIGHT TREMAINE, LLP/Seattle
1201 Third Avenue, Suite 2200
SEATTLE WA 98101-3045

In re Application of: Michael E, Pelly Serial No.: 13/032,980 Filed: February 23, 2011 Docket: **69332-001US2**	DECISION ON PETITION TO MAKE SPECIAL FOR NEW APPLICATION UNDER 37 C.F.R. § 1.102 & M.P.E.P. § 708.02

Title: **METHOD AND APPARATUS FOR REFINING BIODIESEL**

This is a decision on the petition filed on February 23, 2011 to make the above-identified application special for accelerated examination procedure under 37 C.F.R. § 1.102(d).

The petition to make the application special is **DENIED**.

REGULATION AND PRACTICE

To be eligible for accelerated examination under 37 C.F.R. § 1.102(d) and pursuant to the "Change to Practice for Petitions in Patent Applications to Make Special and for Accelerated Examination" published in the Federal Register on June 26, 2006 (71 Fed. Reg. 36323), the following conditions must be satisfied:

1. The application must be a non-reissue utility or design application filed under 37 CFR 1.111(a);
2. The application, the petition and the required fees must be filed electronically using the USPTO's electronic filing system (EFS), or EFS-web; if not filed electronically, a statement asserting that EFS and EFS-web were not available during the normal business hours;

3. The application, at the time of filing, must be complete under 37 CFR 1.51 and in condition for examination;

> *Conditions for Examination:* The application must be in condition for examination at the time of filing. This means the application must include the following:
> (A) Basic filing fee, search fee, and examination fee, under 37 CFR 1.16 (*see* MPEP section 607(I)),
> (B) Application size fee under 37 CFR 1.16(s) (if the specification and drawings exceed 100 sheets of paper) (*see* MPEP section 607(II));
> (C) An executed oath or declaration in compliance with 37 CFR 1.63;
> (D) A specification (in compliance with 37 CFR 1.52) containing a description (37 CFR 1.71) and claims in compliance with 37 CFR 1.75;
> (E) A title and an abstract in compliance with 37 CFR 1.72;
> (F) Drawings in compliance with 37 CFR 1.84;
> (G) Electronic submissions of sequence listings in compliance with 37 CFR 1.821(c) or (e), large tables, or computer listings in compliance with 37 CFR 1.96, submitted via the USPTO's electronic filing system (EFS) in ASCII text as part of an associated file (if applicable);
> (H) Foreign priority claim under 35 U.S.C. 119(a)–(d) identified in the executed oath or declaration or an application data sheet (if applicable);
> (I) Domestic benefit claims under 35 U.S.C. 119(e), 120, 121, or 365(c) in compliance with 37 CFR 1.78 (*e.g.*, the specific reference to the prior application must be submitted in the first sentence(s) of the specification or in an application data sheet, and for any benefit claim to a non-English language provisional application, the application must include a statement that: (a) An English language translation, and (b) a statement that the translation is accurate, have been filed in the provisional application) (if applicable);
> (J) English language translation under 37 CFR 1.52(d), a statement that the translation is accurate, and the processing fee under 37 CFR 1.17(i) (if the specification is in a non-English language);
> (K) No preliminary amendments present on the filing date of the application; and
> (L) No petition under 37 CFR 1.47 for a non-signing inventor.

4. The application must contain three or fewer independent claims and twenty or fewer total claims and the claims must be directed to a single invention.

The application as filed is not eligible for the accelerated examination under 37 C.F.R. § 1.102(d) because it was no in condition for examination as evidenced by applicants' failure to file this petition in accordance with the rules for accelerated examination and MPEP 708.02 which states "Any petition to make special, other than those based on applicant's health or age or the Patent Prosecution Highway (PPH) pilot program, filed on or after August 25, 2006 must meet the requirements for the revised accelerated examination program set forth in MPEP § 708.02(a). See subsections III and IV below for the requirements for filing a petition to make special based on applicant's health or age. Applications filed prior to August 25, 2006 are not eligible for the revised accelerated examination program set forth in MPEP § 708.02(a). Until August 25, 2006, applicant may file a petition to make special in an application filed prior to August 25, 2006 by complying with the guidelines and requirements set forth in subsections I-II, and V-XII below. A petition to make special filed on or after August 25, 2006 will only be granted if it is based upon applicant's health or age or is under the PPH pilot program, or if it complies with the requirements set forth in MPEP § 708.02(a)."

For the above-stated reasons, the petition is **DENIED**.

The application will therefore be taken up by the examiner for action in its regular turn.

Any inquiry regarding this decision should be directed to Marianne C. Seidel, Quality Assurance Specialist, at (571) 272-0584.

/MC Seidel/
Marianne. C. Seidel, Quality Assurance Specialist
Technology Center 1600

UNITED STATES PATENT AND TRADEMARK OFFICE

Commissioner for Patents
United States Patent and Trademark Office
P.O. Box 1450
Alexandria, VA 22313-1450
www.uspto.gov

MAILED

DEC 12 2011

OFFICE OF PETITIONS

NIXON & VANDERHYE, PC
901 NORTH GLEBE ROAD, 11TH FLOOR
ARLINGTON VA 22203

In re Application of :
Hirata et al. :
Application No. 13/032,983 : DECISION ON PETITION
Filed: February 23, 2011 :
Attorney Docket No. 900-673 :

This is a decision on the petition under 37 CFR 1.137(b), filed November 23, 2011, which is being treated as a petition under 37 CFR 1.181, requesting withdrawal of the holding of abandonment in the above-identified application.

The petition under 37 CFR 1.181 is **GRANTED**.
The petition under 37 CFR 1.137(b) is **DISMISSED AS MOOT.**

This application was held abandoned for failure to timely respond to the Notice to File Corrected Application Papers of March 9, 2011, which set a two (2) month shortened statutory period for reply. Accordingly, a reply was due on or before May 9, 2011.

Petitioner states that a timely reply was filed on March 15, 2011, which included the following papers: 1 sheet of drawing, Notice to File Corrected Application Papers, response. Petitioner has submitted a copy of the previously mailed correspondence and a copy of a stamped postcard receipt dated March 15, 2011. Petitioner acknowledges that the incorrect application number was included on the response. It should be noted that petitioner also included an incorrect application number in the petition (12/923,983) to indicate where the application papers filed on March 15, 2011 could be located.

The response submitted March 15, 2011 has been located. It should however be noted that petitioner included the incorrect application number on the reply. The reply did contain the correct art unit, filing date, applicant and title of invention. Petitioner also included a copy of the Notice to File Corrected Application, which included the correct application number.

Correspondence directed to the Patent and Trademark Office concerning a previously filed application for a patent must identify the application number and filing date assigned to that application by the Office. See, 37 CFR 1.5(a). In the above-referenced application, applicant failed to correctly identify the application by citing application 13/023,983 rather than the correct application No. 13/032,983. The Office elects, in this instance, to treat applicant's listing of a typographical error in providing the correct application number, as

a correctable minor error as permitted under MPEP 502. ***However, applicant is reminded that minor errors, such as occurred in the instant application, are to be avoided in the future by the careful review of correspondence prior to submission to the Office.***

Based on the facts stated in the instant petition and the corroborative evidence provided, it is concluded that the holding of abandonment was improperly imposed.

This application is being referred to the Office of Patent Application Processing for further processing in the normal course of business on the reply received on March 15, 2011.

Charlema Grant
Attorney Advisor
Office of Petitions

UNITED STATES PATENT AND TRADEMARK OFFICE

Commissioner for Patents
United States Patent and Trademark Office
P.O. Box 1450
Alexandria, VA 22313-1450
www.uspto.gov

MAILED
MAR 12 2012
OFFICE OF PETITIONS

LOWE HAUPTMAN HAM & BERNER, LLP
1700 DIAGONAL ROAD
SUITE 300
ALEXANDRIA VA 22314

In re Application of
IBAYASHI et al.
Application No.: 13/033,047
Filed: February 23, 2011
Attorney Docket No.: 4639-132
For: UMBILICAL MEMBER ARRANGEMENT UNIT OF ROBOT WRIST SECTION

: DECISION ON REQUEST TO
: PARTICIPATE IN THE PATENT
: PROSECUTION HIGHWAY
: PROGRAM AND PETITION
: TO MAKE SPECIAL UNDER
: 37 CFR 1.102(a)

This is a decision on the request to participate in the Patent Prosecution Highway (PPH) program and the petition under 37 CFR 1.102(a), filed December 27, 2011, to make the above-identified application special.

The request and petition are **DISMISSED**.

A grantable request to participate in the PPH program and petition to make special require:

1. The U.S. application must validly claim priority under 35 U.S.C. 119(a) to one or more applications filed in the JPO, note where the JPO application with similar claims is not the same application from which the U.S. application claims priority then the applicant must identify the relationship between the JPO application with similar claims and the JPO priority application;

2. Applicant must submit a copy of:
   a. The allowable/patentable claim(s) from the JPO application(s) or if a copy of the allowable/patentable claims is available via the Dossier Access System (DAS) applicant may request the USPTO obtain a copy from the DAS, however if the USPTO is unable to obtain a copy from the DAS the applicant will be required to submit a copy;
   b. An English translation of the allowable/patentable claim(s) and
   c. A statement that the English translation is accurate;

3. Applicant must
   a. Ensure all the claims in the U.S. application must sufficiently correspond or be amended to sufficiently correspond to the allowable/patentable claim(s) in the JPO application(s) and

b. Submit a claims correspondence table in English;

4. Examination of the U.S. application has not begun;

5. Applicant must submit:
   a. Documentation of prior office action:
      i. a copy of the office action(s) just prior to the "Decision to Grant a Patent" from each of the JPO application(s) containing the allowable/patentable claim(s) or
      ii. if the allowable/patentable claims(s) are from a "Notification of Reasons for Refusal" then the Notification of Reasons for Refusal or
      iii. if the JPO application is a first action allowance then no office action from the JPO is necessary should be indicated on the request/petition form;

      Further, if a copy of the documents from a or b above is available via the Dossier Access System (DAS) applicant may request the USPTO obtain a copy from the DAS, however if the USPTO is unable to obtain a copy from the DAS the applicant will be required to submit a copy;
   b. An English language translation of the JPO Office action from (5)(a)(i)-(ii) above
   c. A statement that the English translation is accurate;

6. Applicant must submit:
   a. An IDS listing the documents cited by the JPO examiner in the JPO office action (unless already submitted in this application)
   b. Copies of the documents except U.S. patents or U.S. patent application publications (unless already submitted in this application);

Conditions (1-4) above are considered to have been met. However, the request to participate in the PPH pilot program and petition fails meet conditions (5) and (6).

Regarding the requirement of condition (5), applicant has failed to submit a Japanese language copy of the office action and a statement that the translation is accurate.

Regarding the requirement of condition (6), applicant has failed to submit copies of the references cited in the JP office action.

Applicant is given **ONE** opportunity within a time period of **ONE MONTH or THIRTY DAYS**, whichever is longer, from the mailing date of this decision to correct the deficiencies. **NO EXTENSION OF TIME UNDER 37 CFR 1.136 IS PERMITTED.** If the deficiencies are not corrected with the time period given, the application will await action in its regular turn. Response must be filed via the Electronic Filing System (EFS) using the document description: Petition to make special under Patent Pros Hwy. Any preliminary amendments and IDS submitted with the PPH documents must be separately indexed as a preliminary amendment and IDS, respectively.

Telephone inquiries concerning this decision should be directed to JoAnne Burke at 571-272-4584.

All other inquiries concerning the examination or status of the application is accessible in the PAIR system at http://www.uspto.gov/ebc/index.html.

/David Bucci/
Petitions Examiner
Office of Petitions

SPE RESPONSE FOR CERTIFICATE OF CORRECTION

Paper No.:20120417

DATE : April 17, 2012

TO SPE OF : ART UNIT 1622

SUBJECT : Request for Certificate of Correction on Patent No.: 8012970

A response is requested with respect to the accompanying request for a certificate of correction.

Please complete this form and return with file, within **7** days to:
Certificates of Correction Branch - ST (South Tower) 9A22
Palm location **7590** - Tel. No. (703) 305-8309

With respect to the change(s) requested, correcting Office and/or Applicant's errors, should the patent read as shown in the certificate of correction? No new matter should be introduced, nor should the scope or meaning of the claims be changed.

Thank You For Your Assistance **Certificates of Correction Branch**

The request for issuing the above-identified correction(s) is hereby:

Note your decision on the appropriated box.

☒ **Approved** All changes apply.

☐ **Approved in Part** Specify below which changes **do not** apply.

☐ **Denied** State the reasons for denial below.

Comments:

/ANDREW D KOSAR/
Supervisory Patent Examiner.Art Unit 1622

UNITED STATES PATENT AND TRADEMARK OFFICE

UNITED STATES DEPARTMENT OF COMMERCE
United States Patent and Trademark Office
Address: COMMISSIONER FOR PATENTS
P.O. Box 1450
Alexandria, Virginia 22313-1450
www.uspto.gov

APPLICATION NO.	FILING DATE	FIRST NAMED INVENTOR	ATTORNEY DOCKET NO.	CONFIRMATION NO.
13/033,384	02/23/2011	CHE WEI LEE	MR1035-2174	8758

4586 7590 03/09/2011
ROSENBERG, KLEIN & LEE
3458 ELLICOTT CENTER DRIVE-SUITE 101
ELLICOTT CITY, MD 21043

EXAMINER

ART UNIT	PAPER NUMBER
2431	

NOTIFICATION DATE	DELIVERY MODE
03/09/2011	ELECTRONIC

Please find below and/or attached an Office communication concerning this application or proceeding.

The time period for reply, if any, is set in the attached communication.

Notice of the Office communication was sent electronically on above-indicated "Notification Date" to the following e-mail address(es):

ptoactions@rklpatlaw.com
ptoactions@yahoo.com

UNITED STATES PATENT AND TRADEMARK OFFICE

COMMISSIONER FOR PATENTS
UNITED STATES PATENT AND TRADEMARK OFFICE
WASHINGTON, D.C. 20231
www.uspto.gov

Morton Rosenberg
Rosenberg, Klein & Lee
3458 Ellicott Center Drive-Suite 101
Ellicott City, MD 21043

In re Application of:	)	
Lee et al.	)	**DECISION ON PETITION UNDER 37 C.F.R. ∋ 1.84(a)(2) TO ACCEPT COLOR DRAWINGS**
Application No. 13/033384	)	
Attorney Docket No. MR1035-2174	)	
Filed: February 23, 2011	)	
For: Method for Embedding a Secret Message into PNG Image		

This is a decision on the petition under 37 C.F.R. 1.84(a)(2), filed February 23, 2011, requesting acceptance of color drawings.

The petition is **GRANTED**.

REGULATIONS AND PRACTICE

37 C.F.R. § 1.84(a)(2) states:

(2) *Color.* On rare occasions, color drawings may be necessary as the only practical medium by which to disclose the subject matter sought to be patented in a utility or design patent application or the subject matter of a statutory invention registration. The color drawings must be of sufficient quality such that all details in the drawings are reproducible in black and white in the printed patent. Color drawings are not permitted in international applications (see PCT Rule 11.13), or in an application, or copy thereof, submitted under the Office electronic filing system. The Office will accept color drawings in utility or design patent applications and statutory invention registrations only after granting a petition filed under this paragraph explaining why the color drawings are necessary. Any such petition must include the following:

(i) The fee set forth in § 1.17(h);

(ii) Three (3) sets of color drawings;

(iii) An amendment to the specification to insert (unless the specification contains or has been previously amended to contain) the following language as the first paragraph of the brief description of the drawings:

The patent or application file contains at least one drawing executed in color. Copies of this patent or patent application publication with color drawing(s) will be provided by the Office upon request and payment of the necessary fee.

DECISION

The petition and preliminary amendment, satisfies conditions (i) - (iii) above; therefore, the petition is **GRANTED**.

The application file is being forwarded to the Examiner of record.

Any inquiry regarding this decision should be directed the undersigned whose telephone number is (571) 272-3612.

/Tod Swann/

Tod Swann, SPE/WQAS
Technology Center 2400
Network, Multiplexing, Cable and Security

Doc Code: PET.GREEN
Document Description: Petition for Green Tech Pilot

PTO/SB/420 (11-10)
Approved for use through 01/31/2011. OMB 0651-0062
U.S. Patent and Trademark Office; U. S. DEPARTMENT OF COMMERCE
Under the Paperwork Reduction Act of 1995, no persons are required to respond to a collection of information unless it displays a valid OMB control number.

PETITION TO MAKE SPECIAL UNDER THE GREEN TECHNOLOGY PILOT PROGRAM

Attorney Docket Number: 72-1198	Application Number (if known):	Filing date: 23 FEB 2011
First Named Inventor: Chien-Hsin Chou		
Title: GOLF BALL WITH CARBON DIOXIDE ABSORBENTS		

APPLICANT HEREBY REQUESTS TO PARTICIPATE IN THE GREEN TECHNOLOGY PILOT PROGRAM FOR THE ABOVE-IDENTIFIED APPLICATION. See Instruction Sheet on page 2.

This petition must be timely filed electronically using the USPTO electronic filing system, EFS-Web.

1. By filing this petition:

   Applicant is requesting early publication: Applicant hereby requests early publication under 37 CFR 1.219 and the publication fee set forth in 37 CFR 1.18(d) accompanies this request.

2. By filing this petition: applicant is agreeing to make an election without traverse in a telephonic interview and elect an invention that meets the eligibility requirements for the Green Technology Pilot Program, if the Office determines that the claims are not obviously directed to a single invention. See Instruction Sheet.

3. This request is accompanied by statements of special status for the eligibility requirement.

4. The application contains no more than three (3) independent claims and twenty (20) total claims.

5. The application does not contain any multiple dependent claims.

6. Other attachments: _____

Signature /Jennifer R. Mahalingappa/	Date 23 FEB 2011
Name (Print/Typed) Jennifer R. Mahalingappa	Registration Number 47,765

Note: *Signatures of all the inventors or assignees of record of the entire interest or their representative(s) are required in accordance with 37 CFR 1.33 and 11.18. Please see 37 CFR 1.4(d) for the form of the signature. If necessary, submit multiple forms for more than one signature see below*.*

☐ *Total of ..... forms are submitted.

The information is required to obtain or retain a benefit by the public which is to file (and by the USPTO to process) an application. Confidentiality is governed by 35 U.S.C. 122 and 37 CFR 1.11 and 1.14. This collection is estimated to take 12 hours to complete, including gathering, preparing, and submitting the completed application form to the USPTO. Time will vary depending upon the individual case. Any comments on the amount of time you require to complete this form and/or suggestions for reducing this burden, should be sent to the Chief Information Officer, U.S. Patent and Trademark Office, U.S. Department of Commerce, P.O. Box 1450, Alexandria, VA 22313-1450. DO NOT SEND FEES OR COMPLETED FORMS TO THIS ADDRESS. **SEND TO: Commissioner for Patents, P.O. Box 1450, Alexandria, VA 22313-1450.**

If you need assistance in completing the form, call 1-800-PTO-9199 and select option 2.

IN THE UNITED STATES PATENT & TRADEMARK OFFICE

Appln. No.	:	TBA	Confirmation No. TBA
Applicant	:	Chien-Hsin Chou et al.	
Filed	:	February 23, 2011	
Title	:	Golf Ball With Carbon Dioxide Absorbents	
TC/A.U.	:	TBA	
Examiner	:	TBA	
Attorney Docket No.	:	72-1198	
Customer No.	:	57618	

Commissioner for Patents
P.O. Box 1450
Alexandria, VA 22313-1450

Statements of Eligibility for the Green Technology Pilot Program

Applicant hereby submits that the above identified patent application meets the requirements set forth in the notice published on December 8, 2009, in the Federal Register, regarding accelerated examination under the Green Technology Pilot Program, as modified by the Federal Register notices published on May 21, 2010, and November 10, 2010.

Specifically, the above identified patent application includes claims that are directed to a single invention that materially contributes to: greenhouse gas emission reduction. The application is directed to a golf ball with carbon dioxide absorbents. This golf ball is capable of reducing the amount of carbon dioxide in the atmosphere by fixing atmospheric carbon dioxide into a salt form upon exposure. The disclosed golf ball therefore

contributes "to the restoration or maintenance of the basic life-sustaining natural elements," as described in the December 8, 2009, Federal Register notice. Furthermore, Applicant notes that the December 8, 2009, Federal Register specifically states that technologies such as "household appliances" that include "greenhouse gas-abatement technology" are eligible for the Green Technology Pilot Program. Applicant respectfully submits that the disclosed consumer goods containing carbon dioxide absorbents meet this standard, and so this application should be granted special status.

Should the Office of Petitions have any questions or determine that any further action is desirable to place this petition in even better condition for grant, the Office of Petitions is encouraged to contact the Applicant's representative at the number listed below.

Respectfully submitted,

PLUMSEA LAW GROUP, LLC

Date: February 23, 2011 By: /Jennifer R. Mahalingappa/

Jennifer R. Mahalingappa
Registration Number: 47,765
Telephone number: 301-365-9040

JRM:STD

UNITED STATES PATENT AND TRADEMARK OFFICE

UNITED STATES DEPARTMENT OF COMMERCE
United States Patent and Trademark Office
Address: COMMISSIONER FOR PATENTS
P.O. Box 1450
Alexandria, Virginia 22313-1450
www.uspto.gov

APPLICATION NO.	FILING DATE	FIRST NAMED INVENTOR	ATTORNEY DOCKET NO.	CONFIRMATION NO.
13/033,407	02/23/2011	Chien-Hsin Chou	72-1198	8798

57618 7590 12/16/2011
PLUMSEA LAW GROUP, LLC
10411 MOTOR CITY DRIVE
SUITE 320
BETHESDA, MD 20817

EXAMINER

ART UNIT	PAPER NUMBER
3711	

MAIL DATE	DELIVERY MODE
12/16/2011	PAPER

Please find below and/or attached an Office communication concerning this application or proceeding.

The time period for reply, if any, is set in the attached communication.

UNITED STATES PATENT AND TRADEMARK OFFICE

Commissioner for Patents
United States Patent and Trademark Office
P.O. Box 1450
Alexandria, VA 22313-1450
www.uspto.gov

PLUMSEA LAW GROUP, LLC
10411 MOTOR CITY DRIVE
SUITE 320
BETHESDA MD 20817

12/16/11

In re Application of	:	
Chou et al.	:	DECISION ON PETITION
Application No. 13/033,407	:	TO MAKE SPECIAL UNDER
Filed: 2/23/2011	:	THE GREEN TECHNOLOGY
Attorney Docket No. **72-1198**	:	PILOT PROGRAM

This is a decision on the petition under 37 CFR 1.102, filed 2/23/2011, to make the above-identified application special under the pilot program for applications pertaining to Green Technologies as set forth in 74 Federal Register Notice 64666 (December 8, 2009) and amended by 75 Federal Register Notice 28554 (May 21, 2010) and 75 Federal Register Notice 69049 (November 10, 2010).

The petition is **GRANTED**.

A grantable petition to make an application special under 37 CFR 1.102 and the pilot program as set forth in 74 FR 64666 must be directed to a nonprovisional application filed under 35 USC 111(a) or be a national stage entry under 35 USC 371, exclusive of any reissue applications.

In order to qualify for special status, the following requirements must be met. 1) The application must have no more than 3 independent claims and no more than 20 total claims. 2) The application must not contain any multiple dependent claims. 3) The petition must state the basis for seeking special status, i.e., the claimed invention either: A) materially enhances the quality of the environment or B) materially contributes to: i) the discovery or development of renewable energy resources, ii) the more efficient utilization and conservation of energy resources, or iii) greenhouse gas emission reduction. 4) If the disclosure is not clear on its face that the claimed invention materially contributes under category (A) or (B), the petition must be accompanied by a statement by the applicant, assignee, or an attorney/agent registered to practice before the Office explaining how the materiality standard is met. 5) A statement that applicant will agree to make an election without traverse in a telephonic interview if a restriction requirement is made by the examiner. 6) The petition to make special must be filed electronically. 7) The petition must be filed at least one day prior to the date that a first Office Action appears in the Patent Application Information Retrieval (PAIR) system. 8) The petition must be accompanied by a

request for early publication in compliance with 37 CFR 1.219 and include the publication fee as set forth in 37 CFR 1.18(d).

The requirement for a fee for consideration of the petition to make special for applications pertaining to Green Technologies has been waived.

The instant petition complies with items 1 – 8 above. Accordingly, the above-identified application has been accorded "special" status.

Telephone inquires concerning this decision should be directed to Tom Dunn at 571-272-1171.

The application is being forwarded to the Technology Center Art Unit 1736 for action on the merits commensurate with this decision.

/Tom Dunn/

Tom Dunn
Quality Assurance Specialist
Technology Center 1700

Doc Code: PET.GREEN
Document Description: Petition for Green Tech Pilot

PTO/SB/420 (11-10)
Approved for use through 01/31/2011. OMB 0651-0062
U.S. Patent and Trademark Office; U. S. DEPARTMENT OF COMMERCE
Under the Paperwork Reduction Act of 1995, no persons are required to respond to a collection of information unless it displays a valid OMB control number.

PETITION TO MAKE SPECIAL UNDER THE GREEN TECHNOLOGY PILOT PROGRAM

Attorney Docket Number: 72-1223	Application Number (if known):	Filing date: 23 FEB 2011
First Named Inventor: Chia-Chyi Cheng		
Title: METHODS FOR ENCOURAGING USE OF GREENHOUSE GAS REDUCING GOLF BALLS		

APPLICANT HEREBY REQUESTS TO PARTICIPATE IN THE GREEN TECHNOLOGY PILOT PROGRAM FOR THE ABOVE-IDENTIFIED APPLICATION. See Instruction Sheet on page 2.

This petition must be timely filed electronically using the USPTO electronic filing system, EFS-Web.

1. By filing this petition:

   Applicant is requesting early publication: Applicant hereby requests early publication under 37 CFR 1.219 and the publication fee set forth in 37 CFR 1.18(d) accompanies this request.

2. By filing this petition: applicant is agreeing to make an election without traverse in a telephonic interview and elect an invention that meets the eligibility requirements for the Green Technology Pilot Program, if the Office determines that the claims are not obviously directed to a single invention. See Instruction Sheet.

3. This request is accompanied by statements of special status for the eligibility requirement.

4. The application contains no more than three (3) independent claims and twenty (20) total claims.

5. The application does not contain any multiple dependent claims.

6. Other attachments: _____

Signature /Jennifer R. Mahalingappa/	Date 23 FEB 2011
Name (Print/Typed) Jennifer R. Mahalingappa	Registration Number 47,765

Note: *Signatures of all the inventors or assignees of record of the entire interest or their representative(s) are required in accordance with 37 CFR 1.33 and 11.18. Please see 37 CFR 1.4(d) for the form of the signature. If necessary, submit multiple forms for more than one signature see below*.*

☐ *Total of ..... forms are submitted.

The information is required to obtain or retain a benefit by the public which is to file (and by the USPTO to process) an application. Confidentiality is governed by 35 U.S.C. 122 and 37 CFR 1.11 and 1.14. This collection is estimated to take 12 hours to complete, including gathering, preparing, and submitting the completed application form to the USPTO. Time will vary depending upon the individual case. Any comments on the amount of time you require to complete this form and/or suggestions for reducing this burden, should be sent to the Chief Information Officer, U.S. Patent and Trademark Office, U.S. Department of Commerce, P.O. Box 1450, Alexandria, VA 22313-1450. DO NOT SEND FEES OR COMPLETED FORMS TO THIS ADDRESS. **SEND TO: Commissioner for Patents, P.O. Box 1450, Alexandria, VA 22313-1450.**

If you need assistance in completing the form, call 1-800-PTO-9199 and select option 2.

IN THE UNITED STATES PATENT & TRADEMARK OFFICE

Appln. No.	:	TBA	Confirmation No. TBA
Applicant	:	Chia-Chyi Cheng et al.	
Filed	:	February 23, 2011	
Title	:	Methods for Encouraging use of Greenhouse Gas Reducing Golf Balls	
TC/A.U.	:	TBA	
Examiner	:	TBA	
Attorney Docket No.	:	72-1223	
Customer No.	:	57618	

Commissioner for Patents
P.O. Box 1450
Alexandria, VA 22313-1450

Statements of Eligibility for the Green Technology Pilot Program

Applicant hereby submits that the above identified patent application meets the requirements set forth in the notice published on December 8, 2009, in the Federal Register, regarding accelerated examination under the Green Technology Pilot Program, as modified by the Federal Register notices published on May 21, 2010, and November 10, 2010.

Specifically, the above identified patent application includes claims that are directed to a single invention that materially contributes to: greenhouse gas emission reduction. The application is directed to methods of using a golf ball with carbon dioxide absorbents. This golf ball is capable of reducing the amount of carbon dioxide in the atmosphere by fixing

atmospheric carbon dioxide into a salt form upon exposure. The methods disclosed induce a golfer to reuse and recycle the golf ball including carbon dioxide absorbents. The disclosed methods therefore contribute "to the restoration or maintenance of the basic life-sustaining natural elements," as described in the December 8, 2009, Federal Register notice. Furthermore, Applicant notes that the December 8, 2009, Federal Register specifically states that technologies such as "household appliances" that include "greenhouse gas-abatement technology" are eligible for the Green Technology Pilot Program. Applicant respectfully submits that the disclosed methods of using consumer goods containing carbon dioxide absorbents meet this standard, and so this application should be granted special status.

Should the Office of Petitions have any questions or determine that any further action is desirable to place this petition in even better condition for grant, the Office of Petitions is encouraged to contact the Applicant's representative at the number listed below.

Respectfully submitted,

PLUMSEA LAW GROUP, LLC

Date: February 23, 2011 By: /Jennifer R. Mahalingappa/

Jennifer R. Mahalingappa
Registration Number: 47,765
Telephone number: 301-365-9040

JRM:STD

UNITED STATES PATENT AND TRADEMARK OFFICE

UNITED STATES DEPARTMENT OF COMMERCE
United States Patent and Trademark Office
Address: COMMISSIONER FOR PATENTS
P.O. Box 1450
Alexandria, Virginia 22313-1450
www.uspto.gov

APPLICATION NO.	FILING DATE	FIRST NAMED INVENTOR	ATTORNEY DOCKET NO.	CONFIRMATION NO.
13/033,428	02/23/2011	Chia-Chyi Cheng	72-1223	8849

57618 7590 01/10/2012
PLUMSEA LAW GROUP, LLC
10411 MOTOR CITY DRIVE
SUITE 320
BETHESDA, MD 20817

EXAMINER

ART UNIT	PAPER NUMBER
3711	

MAIL DATE	DELIVERY MODE
01/10/2012	PAPER

Please find below and/or attached an Office communication concerning this application or proceeding.

The time period for reply, if any, is set in the attached communication.

UNITED STATES PATENT AND TRADEMARK OFFICE

Commissioner for Patents
United States Patent and Trademark Office
P.O. Box 1450
Alexandria, VA 22313-1450
www.uspto.gov

PLUMSEA LAW GROUP, LLC
10411 MOTOR CITY DRIVE
SUITE 320
BETHESDA MD 20817

In re Application of	:	
CHENG, CHIA-CHYI et al	:	DECISION ON PETITION
Application No. 13/033,428	:	TO MAKE SPECIAL UNDER
Filed: February 23, 2011	:	THE GREEN TECHNOLOGY
Attorney Docket No. 72-1223	:	PILOT PROGRAM

This is a decision on the petition under 37 CFR 1.102, filed February 23, 2011, to make the above-identified application special under the pilot program for applications pertaining to Green Technologies as set forth in 74 Federal Register Notice 64666 (December 8, 2009) and amended by 75 Federal Register Notice 28554 (May 21, 2010) and 75 Federal Register Notice 69049 (November 10, 2010).

The petition is **granted**.

A grantable petition to make an application special under 37 CFR 1.102 and the pilot program as set forth in 74 FR 64666 must be directed to a nonprovisional application filed under 35 USC 111(a) or be a national stage entry under 35 USC 371, exclusive of any reissue applications.

If reconsideration of this decision is desired, a petition for reconsideration must be filed within ONE (1) MONTH OR THIRTY (30) DAYS from the mail date of this decision, whichever is longer. No extension of this time limit can be granted under 37 CFR 1.136(a) or (b). The petition for reconsideration should include an exhaustive attempt to provide the lacking item(s) noted below, since, after a decision on the petition for reconsideration, no further reconsideration or review of the matter will be undertaken by the Director.

In order to qualify for special status, the following requirements must be met. 1) The application must have no more than 3 independent claims and no more than 20 total claims. 2) The application must not contain any multiple dependent claims. 3) The petition must state the basis for seeking special status, i.e., the claimed invention either: A) materially enhances the quality of the environment or B) materially contributes to: i) the discovery or development of renewable energy resources, ii) the more efficient utilization and conservation of energy resources, or iii) greenhouse gas emission reduction. 4) If the disclosure is not clear on its face that the claimed invention materially contributes under category (A) or (B), the petition must be accompanied by

a statement by the applicant, assignee, or an attorney/agent registered to practice before the Office explaining how the materiality standard is met. 5) A statement that applicant will agree to make an election without traverse in a telephonic interview if a restriction requirement is made by the examiner. 6) The petition to make special must be filed electronically. 7) The petition must be filed at least one day prior to the date that a first Office Action appears in the Patent Application Information Retrieval (PAIR) system. 8) The petition must be accompanied by a request for early publication in compliance with 37 CFR 1.219 and include the publication fee as set forth in 37 CFR 1.18(d).

The requirement for a fee for consideration of the petition to make special for applications pertaining to Green Technologies has been waived.

The instant petition complies with items 1 – 8 above. Accordingly, the above-identified application has been accorded "special" status.

Telephone inquires concerning this decision should be directed to Henry C. Yuen at 571-272-4856.

This application will be forwarded to the Technology Center Art Unit 3711 for action on the merits commensurate with this decision.

/Henry C. Yuen/

Henry C. Yuen
Quality Assurance Specialist
Technology Center TC 3700

UNITED STATES PATENT AND TRADEMARK OFFICE

Commissioner for Patents
United States Patent and Trademark Office
P.O. Box 1450
Alexandria, VA 22313-1450
www.uspto.gov

NOVARTIS INSTITUTES FOR BIOMEDICAL RESEARCH, INC.
220 MASSACHUSETTS AVENUE
CAMBRIDGE, MA 02139

MAILED
JAN 27 2012
OFFICE OF PETITIONS

Applicant: STRAUB, et al.
Appl. No.: 13/033,463
Filing Date: February 23, 2011
Title: DIMERIC IAP INHIBITORS
Attorney Docket No.: 53777-US-NP
Pub. No.: US 2011/0206690 A1
Pub. Date: August 25, 2011

This is a decision on the request for correction of patent application publication under 37 CFR 1.221(b), received on October 24, 2011, for the above-identified application.

The request is DISMISSED.

Applicant requests that the application be republished because the patent application publication contains material mistakes wherein several compounds in the specification are incomprehensible because the compounds have been disjoined or separated by page breaks.

37 CFR 1.221 (b) is applicable "only when the Office makes a material mistake which is apparent from Office records.... Any request for a corrected publication or revised patent application publication other than provided as provided in paragraph (a) of this section must be filed within two months from the date of the patent application publication. This period is not extendable." A material mistake must affect the public's ability to appreciate the technical disclosure of the patent application publication, to determine the scope of the patent application publication, or to determine the scope of the provisional rights that an applicant may seek to enforce upon issuance of a patent. [1]

The errors noted by requestor are Office errors but are not material Office errors as defined under 37 CFR 1.221(b). In particular, the errors do not affect the interpretation of the published claims. See MPEP 1130 B.

The applicant is advised that a "request for republication of an application previously published" may be filed under 37 CFR 1.221(a). Such a request for republication "must include a copy of the application compliance with the Office's electronic filing system requirements and be accompanied by the publication fee set forth in § 1.18(d) and the processing fee set forth in

[1] Changes to Implement Eighteen-Month Publication of Patent Applications, 65 FR 57023, 57038 (Sept. 20, 2000), 1239, Off. Gaz. Pat. Office Notices 63, 75 (Oct. 10, 2000) (final rule).

§ 1.17(i)." If the request for republication does not comply with the electronic filing system requirements, the republication will not take place and the publication fee set forth in § 1.18(d) will be refunded. The processing fee will be retained.

A guide for filing a request for a Pre-Grant Publication, such as a request for republication, may be found on the link below:

http://www.uspto.gov/patents/process/file/efs/guidance/index.jsp

http://www.uspto.gov/ebc/portal/efs/pgpub_quickstart.pdf

Any request for republication under 37 CFR 1.221(a), must be submitted via the EFS system, as a "Pre-Grant Publication".

Inquiries relating to this matter may be directed to Sherry D. Brinkley at (571) 272-3204.

/Christopher Bottorff/

Christopher Bottorff
Petitions Examiner
Office of Petitions

PTO/SB/420 (05-10)
Approved for use through 01/31/2011. OMB 0651-0062
U.S. Patent and Trademark Office; U. S. DEPARTMENT OF COMMERCE
Under the Paperwork Reduction Act of 1995, no persons are required to respond to a collection of information unless it displays a valid OMB control number.

PETITION TO MAKE SPECIAL UNDER THE GREEN TECHNOLOGY PILOT PROGRAM

Attorney Docket Number: NDTCO.199A	Application Number (if known): 13/033,473	Filing date: February 23, 2011

First Named Inventor: Shijun Zheng

Title: COMPOUNDS FOR USE IN LIGHT-EMITTING DEVICES

APPLICANT HEREBY REQUESTS TO PARTICIPATE IN THE GREEN TECHNOLOGY PILOT PROGRAM FOR THE ABOVE-IDENTIFIED APPLICATION. See Instruction Sheet on page 2.

This petition must be timely filed electronically using the USPTO electronic filing system, EFS-Web.

1. By filing this petition:

   Applicant is requesting early publication: Applicant hereby requests early publication under 37 CFR 1.219 and the publication fee set forth in 37 CFR 1.18(d) accompanies this request.

2. By filing this petition: applicant is agreeing to make an election without traverse in a telephonic interview and elect an invention that meets the eligibility requirements set forth in the notice titled "Pilot Program for Green Technologies Including Greenhouse Gas Reduction," as modified by the notice titled "Elimination of Classification Requirement in the Green Technology Pilot Program," each of which was published in the Federal Register, if the Office determines that the claims are not obviously directed to a single invention.

3. This request is accompanied by statements of special status for the eligibility requirement.

4. The application contains no more than three (3) independent claims and twenty (20) total claims.

5. The application does not contain any multiple dependent claims.

6. Other attachments: _____

Signature /Brent Johnson/	Date 03/04/11
Name (Print/Typed) Brent Johnson, Ph.D.	Registration Number 51,851

Note: *Signatures of all the inventors or assignees of record of the entire interest or their representative(s) are required in accordance with 37 CFR 1.33 and 11.18. Please see 37 CFR 1.4(d) for the form of the signature. If necessary, submit multiple forms for more than one signature, see below*.*

☑ *Total of 1 forms are submitted.

The information is required to obtain or retain a benefit by the public which is to file (and by the USPTO to process) an application. Confidentiality is governed by 35 U.S.C. 122 and 37 CFR 1.11 and 1.14. This collection is estimated to take 1 hour to complete, including gathering, preparing, and submitting the completed application form to the USPTO. Time will vary depending upon the individual case. Any comments on the amount of time you require to complete this form and/or suggestions for reducing this burden, should be sent to the Chief Information Officer, U.S. Patent and Trademark Office, U.S. Department of Commerce, P.O. Box 1450, Alexandria, VA 22313-1450. DO NOT SEND FEES OR COMPLETED FORMS TO THIS ADDRESS. **SEND TO: Commissioner for Patents, P.O. Box 1450, Alexandria, VA 22313-1450.**

If you need assistance in completing the form, call 1-800-PTO-9199 and select option 2.

UNITED STATES PATENT AND TRADEMARK OFFICE

UNITED STATES DEPARTMENT OF COMMERCE
United States Patent and Trademark Office
Address: COMMISSIONER FOR PATENTS
P.O. Box 1450
Alexandria, Virginia 22313-1450
www.uspto.gov

APPLICATION NO.	FILING DATE	FIRST NAMED INVENTOR	ATTORNEY DOCKET NO.	CONFIRMATION NO.
13/033,473	02/23/2011	Shijun Zheng	NDTCO.199A	8943

20995 7590 03/30/2011
KNOBBE MARTENS OLSON & BEAR LLP
2040 MAIN STREET
FOURTEENTH FLOOR
IRVINE, CA 92614

EXAMINER

ART UNIT	PAPER NUMBER
2811	

NOTIFICATION DATE	DELIVERY MODE
03/30/2011	ELECTRONIC

Please find below and/or attached an Office communication concerning this application or proceeding.

The time period for reply, if any, is set in the attached communication.

Notice of the Office communication was sent electronically on above-indicated "Notification Date" to the following e-mail address(es):

jcartee@kmob.com
efiling@kmob.com
eOAPilot@kmob.com

UNITED STATES PATENT AND TRADEMARK OFFICE

Commissioner for Patents
United States Patent and Trademark Office
P.O. Box 1450
Alexandria, VA 22313-1450
www.uspto.gov

KNOBBE MARTENS OLSON & BEAR LLP
2040 MAIN STREET
FOURTEENTH FLOOR
IRVINE CA 92614

In re Application of	:	
ZHENG et al.	:	DECISION ON PETITION
Application No. 13/033,473	:	TO MAKE SPECIAL UNDER
Filed: March 23, 2011	:	THE GREEN TECHNOLOGY
Attorney Docket No. NDTCO.199A	:	PILOT PROGRAM

This is a decision on the petition under 37 CFR 1.102, filed on March 04, 2011, to make the above-identified application special under the pilot program for applications pertaining to Green Technologies as set forth 74 Federal Register Notice 64666 (December 8, 2009) and amended by 75 Federal Register Notice 28554 (May 21, 2010) and 75 Federal Register Notice 69049 (November 10, 2010).

The petition is **GRANTED**.

A grantable petition to make an application special under 37 CFR 1.102 and the pilot program as set forth in 74 FR 64666 must be directed to a nonprovisional application filed under 35 USC 111(a) or be a national stage entry under 35 USC 371, exclusive of any reissue applications.

In order to qualify for special status, the following requirements must be met. 1) The application must have no more than 3 independent claims and no more than 20 total claims. 2) The application must not contain any multiple dependent claims. 3) The petition must state the basis for seeking special status, i.e., the claimed invention either: A) materially enhances the quality of the environment or B) materially contributes to: i) the discovery or development of renewable energy resources, ii) the more efficient utilization and conservation of energy resources, or iii) greenhouse gas emission reduction. 4) If the disclosure is not clear on its face that the claimed invention materially contributes under category (A) or (B), the petition must be accompanied by a statement by the applicant, assignee, or an attorney/agent registered to practice before the Office explaining how the materiality standard is met. 5) A statement that applicant will agree to make an election without traverse in a telephonic interview if a restriction requirement is made by the examiner. 6) The petition to make special must be filed electronically. 7) The petition must be filed at least one day prior to the date that a first Office Action appears in the Patent Application Information Retrieval (PAIR) system. 8) The petition must be accompanied by a request for early publication in compliance with 37 CFR 1.219 and include the publication fee as set forth in 37 CFR 1.18(d).

The requirement for a fee for consideration of the petition to make special for applications pertaining to Green Technologies has been waived.

The instant petition complies with items 1 – 8 above. Accordingly, the above-identified application has been accorded "special" status.

Telephone inquires concerning this decision should be directed to Lee W. Young at 571-272-4549.

The application is being forwarded to the Technology Center Art Unit 2811 for action in its regular turn.

Lee W. Young
Quality Assurance Specialist
Technology Center 2800

UNITED STATES PATENT AND TRADEMARK OFFICE

Commissioner for Patents
United States Patent and Trademark Office
P.O. Box 1450
Alexandria, VA 22313-1450
www.uspto.gov

Decision Date : October 7,2011

In re Application of :

Richard EWERS

Application No : 13033485

Filed : 23-Feb-2011

Attorney Docket No : USGINZ07900

DECISION ON REQUEST TO WITHDRAW AS ATTORNEY/AGENTOF RECORD

This is an electronic decision on the Request to Withdraw as attorney or agent of record under 37 CFR § 1.36(b), filed October 7,2011

The request is **APPROVED.**

The request was signed by Johney U. Han (registration no. 45565) on behalf of all attorneys/agents associated with Customer Number 40518 . All attorneys/agents associated with Cusotmer Number 40518 have been withdrawn.

Since there are no remaining attorneys of record, all future communications from the Office will be directed to the first named inventor or assignee that has properly made itself of record pursuant to 37 CFR 3.71, with correspondence address:

Name	USGI Medical, Inc.
Name2	
Address 1	1140 Calle Cordillera
Address 2	
City	San Clemente
State	CA
Postal Code	92673
Country	US

As a reminder, requester is required to inform the first named inventor or assignee that has properly made itself of record pursuant to 37 CFR 3.71 of the electronically processed petition.

Telephone inquiries concerning this decision should be directed to the Patent Electronic Business Center (EBC) at 866-217-9197.

Office of Petitions

Doc Code: PET.AUTO **Document Description: Petition automatically granted by EFS-Web**	PTO/SB/83 U.S. Patent and Trademark Office Department of Commerce

Electronic Petition Request	**REQUEST FOR WITHDRAWAL AS ATTORNEY OR AGENT AND CHANGE OF CORRESPONDENCE ADDRESS**
Application Number	13033485
Filing Date	23-Feb-2011
First Named Inventor	Richard EWERS
Art Unit	3773
Examiner Name	
Attorney Docket Number	USGINZ07900
Title	DEVICES AND METHODS FOR LAPAROSCOPIC GASTRIC TISSUE RECONFIGURATION

◉ Please withdraw me as attorney or agent for the above identified patent application and the practitioners of record associated with Customer Number: 40518

The reason(s) for this request are those described in 37 CFR:

10.40(b)(4)

Certifications

☒ I/We have given reasonable notice to the client, prior to the expiration of the response period, that the practitioner(s) intend to withdraw from employment

☒ I/We have delivered to the client or a duly authorized representative of the client all papers and property (including funds) to which the client is entitled

☒ I/We have notified the client of any responses that may be due and the time frame within which the client must respond

Change the correspondence address and direct all future correspondence to the first named inventor or assignee that has properly made itself of record pursuant to 37 CFR 3.71:

Name	USGI Medical, Inc.
Address	1140 Calle Cordillera
City	San Clemente
State	CA
Postal Code	92673
Country	US

I am authorized to sign on behalf of myself and all withdrawing practitioners.	
Signature	/Johney U. Han/
Name	Johney U. Han
Registration Number	45565

UNITED STATES PATENT AND TRADEMARK OFFICE

UNITED STATES DEPARTMENT OF COMMERCE
United States Patent and Trademark Office
Address: COMMISSIONER FOR PATENTS
P.O. Box 1450
Alexandria, Virginia 22313-1450
www.uspto.gov

APPLICATION NO.	FILING DATE	FIRST NAMED INVENTOR	ATTORNEY DOCKET NO.	CONFIRMATION NO.
13/033,488	02/23/2011	Tom J. Mathai	015-002005	8978

87241 7590 08/09/2011
DiBerardino Law LLC
c/o CPA Global
P.O. Box 52050
Minneapolis, MN 55402

EXAMINER
STIBLEY, MICHAEL R

ART UNIT	PAPER NUMBER
3688	

NOTIFICATION DATE	DELIVERY MODE
08/09/2011	ELECTRONIC

Please find below and/or attached an Office communication concerning this application or proceeding.

The time period for reply, if any, is set in the attached communication.

Notice of the Office communication was sent electronically on above-indicated "Notification Date" to the following e-mail address(es):

diana@diberardinolaw.com
docketing@cpaglobal.com

UNITED STATES PATENT AND TRADEMARK OFFICE

Commissioner for Patents
United States Patent and Trademark Office
P.O. Box 1450
Alexandria, VA 22313-1450
www.uspto.gov

AUG - 8 2011

DiBeradino Law LLC
268 Connecting Rd.
Pittsburgh, PA 15228

In re application of: Tom J. Mathai et al. Application No. 13/033488 Filed: February 23, 2011 For: METHOD OF RECORDING USAGE OF AN ONLINE SOCIAL NETWORK	**DECISION ON PETITION TO MAKE SPECIAL FOR NEW APPLICATION UNDER 37 CFR 1.102**

This is a decision on the petition filed on February 23, 2011 to make the above-identified application special for accelerated examination procedure under 37 C.F.R. § 1.102(d).

The petition to make the application special is **DISMISSED**.

REGULATION AND PRACTICE

A grantable petition to make special under 37 C.F.R. § 1.102(d) and pursuant to the "Change to Practice for Petitions in Patent Applications to Make Special and for Accelerated Examination" published in the Federal Register on June 26, 2006 (71 Fed. Reg. 36323), must satisfy the following conditions:

I. Conditions Regarding the Application:

1. the application must be a non-reissue utility or design application filed under 37 CFR 1.111(a);

2. the application, the petition and the required fees must be filed electronically using the USPTO's electronic filing system (EFS), or EFS-web; if not filed electronically, a statement asserting that EFS and EFS-web were not available during the normal business hours.

3. at the time of filing, the application must be complete under 37 CFR 1.51 and in condition for examination;

4. the application must contain three or fewer independent claims and twenty or fewer total claims and the claims must be directed to a single invention.

II. Conditions Regarding the Petition:

The petition must:

1. be filed with the application;

2. include a statement that applicant agrees not to separately argue the patentability of any independent claim during any appeal in the application;

3. include a statement that applicant agrees to make an election without traverse in a telephone interview.

4. include a statement that applicant agrees to conduct such an interview when requested by the examiner.

5. include a statement, made based on a good faith belief, that a preexamination search in compliance with the following requirements, was conducted, including an identification of the field of search by United States class and subclass, where applicable, and for database searches, the search logic or chemical structure or sequence used as a query, the name of the file(s) searched and the database service, and the date of the search.

The preexamination search must:

5.1 involve U.S. patents and patent application publications, foreign patent documents, and non-patent literature, unless the applicant can justify with reasonable certainty that no references more pertinent than those already identified are likely to be found in the eliminated sources and includes such a justification with this statement;

5.2. be directed to the claimed invention and encompass all of the features of the claims, giving the claims the broadest reasonable expectation;

5.3. encompass the disclosed features that may be claimed.

6. must provide in support of the petition an accelerated examination support document.

An accelerated examination support document must include:

6.1. an information disclosure statement (IDS) in compliance with 37 CFR 1.98 citing each reference deemed most closely related to the subject matter of each of the claims;

6.2. an identification of all the limitations in the claims that are disclosed by the reference specifying where the limitation is disclosed in the cited reference;

6.3. a detailed explanation of how each of the claims are patentable over the references cited with particularity required by 37 CFR 1.111(b) and (c);

6.4. a concise statement of the utility of the invention as defined in each of the independent claims (unless the application is a design application);

6.5. a showing of where each limitation of the claims finds support under 35 USC 112, first paragraph, in the written description of the specification. If applicable, the showing must also identify: (1) each means- (or step) plus-function claim element that invokes consideration under 35 UDC 112, sixth paragraph; and (2) the structure, material, or acts in the specification that corresponds to each means- (or step) plus-function claim element that invokes consideration under 35 UDC 112, sixth paragraph; if the application claims the benefit of one or more applications under title 35, United States Code, the showing must also include where each limitation of the claims finds support under 35 USC 112, first paragraph, in each such application in which such supports exists;

6.6. an identification of any cited references that may be disqualified under 35 USC 103(c).

REVIEW OF FACTS

The petition fails to comply with conditions II.5.2, II.6.3, and II.6.5.

As to condition II.5.2, the pre-examination search does not sufficiently encompass all of the features of the claims. While the search appears sufficient for the independent claim and certain ones of the dependent claims, applicant has indicated that dependent claims 7, 8, and 10 are separately patentable and the search does not encompass the features these claims require, eg. User response to displayed advertisements, non-response to an advertisement causing removal from a list of possible advertisements for display to a user, and the social network offered as a free service to users. Applicant is reminded to update the Support Document in the event of the discovery of relevant art from any new searches.

As to condition II.6.3, there is not a satisfactory detailed explanation of claim patentability over each of the references. While the explanation provided for the independent claims appears to be acceptable, the explanation needs to specify how each of the claims are patentable over each of the cited references, which includes the need to specify whether each of the dependent claims are separately patentable beyond the limitations contained in the independent claims, and if so how, or a statement made that the dependent claims are not separately patentable.
This includes clearly specifying whether dependent claims 2-4, 9, 11-12, and 14-18 are separately patentable beyond the limitations contained in the independent claims, and if so how, or a statement made that the dependent claims are not separately patentable.

As to condition to II.6.5, the showing of where each limitation of each of the claims finds support under 35 USC 112 in the written description of the application is insufficient. For each claimed limitation (including dependent claims) the petition needs to identify specific passages, or at least a single paragraph where each limitation provides support. Applicant only mapped out support from the disclosure of the instant application for the claims as whole. A mapping should be performed separately for each limitation for each claim. Similar support (if any) for the claimed invention must additionally be shown for parent applications identified in the petition upon which priority is claimed under 35 USC 119 and 35 USC 120 so that the examiner can determine an effective filing date for each claim. Specifically, for provisional applications 60/160,760 and 60/132,168 and parent application 09/959,654, a listing of where the limitations of the claims find support is necessary. Listing broadly a number of figures or paragraphs does not comply with what is required.

Further as to condition II.6.5, the showing of where support under 35 USC 112, first paragraph, exists for each application upon which benefit is claimed is additionally insufficient because Applicant has not identified where support (if any) for the claimed invention is found in parent applications 10/922,160 and PCT/US00/11840.

Therefore, the petition fails to meet the required conditions to be accorded special status under the accelerated examination procedure.

DECISION

For the above-stated reasons, the petition is **DISMISSED**. The application will therefore be taken up by the examiner for action in its regular turn.

Petitioner is given a single opportunity to perfect the petition. Any request for reconsideration of this decision must be submitted within 1 (one) month or 30 (thirty) days, whichever is longer, (no extension of time under 37 CFR 1.136(a)) from the date of this decision in order to be considered timely. Any request for reconsideration must address the deficiencies indicated above.

Petitioner is reminded that, upon granting of the special status of the application on request for reconsideration, the application will be processed expeditiously. However, due to the dismissal of the instant petition, examination may not be completed within twelve months of the filing date of the application.

Any inquiry regarding this decision should be directed to Robert Weinhardt, Business Practice Specialist, at (571) 272-6633.

Robert A. Weinhardt,
Business Practice Specialist
Technology Center 3600

RW/bvb: 8/5/11

UNITED STATES PATENT AND TRADEMARK OFFICE

UNITED STATES DEPARTMENT OF COMMERCE
United States Patent and Trademark Office
Address: COMMISSIONER FOR PATENTS
P.O. Box 1450
Alexandria, Virginia 22313-1450
www.uspto.gov

APPLICATION NO.	FILING DATE	FIRST NAMED INVENTOR	ATTORNEY DOCKET NO.	CONFIRMATION NO.
13/033,527		Mark Exner	FESS.005C1	9046

20995 7590 02/28/2011
KNOBBE MARTENS OLSON & BEAR LLP
2040 MAIN STREET
FOURTEENTH FLOOR
IRVINE, CA 92614

EXAMINER

ART UNIT	PAPER NUMBER
3746	

NOTIFICATION DATE	DELIVERY MODE
02/28/2011	ELECTRONIC

Please find below and/or attached an Office communication concerning this application or proceeding.

The time period for reply, if any, is set in the attached communication.

Notice of the Office communication was sent electronically on above-indicated "Notification Date" to the following e-mail address(es):

jcartee@kmob.com
efiling@kmob.com
eOAPilot@kmob.com

UNITED STATES PATENT AND TRADEMARK OFFICE

Commissioner for Patents
United States Patent and Trademark Office
P.O. Box 1450
Alexandria, VA 22313-1450
www.uspto.gov

KNOBBE MARTENS OLSON & BEAR LLP
2040 MAIN STREET
FOURTEENTH FLOOR
IRVINE CA 92614

In re Application of	:
EXNER, MARK et al	: DECISION ON REQUEST TO
Application No. 13/033,527	: PARTICIPATE IN PATENT
Filed: Feb. 23, 2011	: PROSECUTION HIGHWAY
Attorney Docket No. FESS.005C1	: PILOT PROGRAM AND PETITION
For: FLOOD WATER REMOVAL SYSTEM	: TO MAKE SPECIAL UNDER
	: 37 CFR 1.102(a)

This is a decision on the request to participate in the Patent Prosecution Highway (PPH) program and the petition under 37 CFR 1.102(a), filed Feb. 23, 2011 to make the above-identified application special.

The request and petition are Dismissed.

A grantable request to participate in the PPH program and petition to make special require:
(1) The U.S. application must disclose an eligible relationship to one or more PCT applications filed in the JPO, EPO, KIPO or USPTO;
(2) Applicant must submit a copy of the allowable/patentable claim(s) from the PCT application(s) latest international work product (the written opinion or the IPER) along with an English translation thereof and a statement that the English translation is accurate;
(3) All the claims in the U.S. application must sufficiently correspond or be amended to sufficiently correspond to the allowable/patentable claim(s) in the PCT application(s);
(4) Examination of the U.S. application has not begun;
(5) Applicant must submit a copy of the latest international work product from the PCT application containing the allowable/patentable claim(s) along with an English translation thereof and a statement that the English translation is accurate; and
(6) Applicant must submit an IDS listing the documents cited by the PCT examiner in the international work product along with copies of documents except U.S. patents or U.S. patent application publications.

The request to participate in the PPH program and petition met all conditions except Items #3 and #5 above.

With regard to Item #3, the claims in the U.S. application must sufficiently correspond or be amended to sufficiently correspond to the allowable/patentable claims in the PCT application. The Claims Correspondence Table in the petition is deficient. Current US application contains claims 2-15 and 21-24 which are not sufficiently corresponding to allowable claims 4, 5, 7, 10-15 and 21-25 of PCT search report. In the PCT search opinion, only claims 4, 5, 7, 10-15 and 21-25 meet test for novelty, inventive step and industrial applicability. Thus, Item #3 is not satisfied and for this reason the petition can not be granted. Those extra claims, for example, claims 12-15, must be cancelled.

The PCT Search Report filed with the petition does not include any positive opinion as to the patentability of the claims 2-15 and 21-24. A PCT Search Opinion showing the patentability of equivalence of current pending US claims 2-15 and 21-24 is required. A copy of PCT allowed claims is required for comparison purposes.

Applicant is encouraged to cite and submit all relevant prior art references, if any, to facilitate examination in this application.

Applicant is given a time period of **ONE MONTH or THIRTY DAYS**, whichever is longer, from the mailing date of this decision to correct the deficiencies. **NO EXTENSION OF TIME UNDER 37 CFR 1.136 IS PERMITTED.** If the deficiencies are not corrected with the time period given, the application will await action in its regular turn. Response must be filed via EFS-Web.

Telephone inquiries concerning this decision should be directed to Henry C. Yuen at 571-272-4856.

Petition is **dismissed**.

/Henry C. Yuen/

Henry C. Yuen, Special Programs Examiner
Technology Center 3700 – Mechanical Engineering,
Manufacturing and Products
571-272-4856

UNITED STATES PATENT AND TRADEMARK OFFICE

UNITED STATES DEPARTMENT OF COMMERCE
United States Patent and Trademark Office
Address: COMMISSIONER FOR PATENTS
P.O. Box 1450
Alexandria, Virginia 22313-1450
www.uspto.gov

APPLICATION NO.	FILING DATE	FIRST NAMED INVENTOR	ATTORNEY DOCKET NO.	CONFIRMATION NO.
13/033,527	02/23/2011	Mark Exner	FESS.005C1	9046

20995 7590 03/17/2011
KNOBBE MARTENS OLSON & BEAR LLP
2040 MAIN STREET
FOURTEENTH FLOOR
IRVINE, CA 92614

EXAMINER

ART UNIT	PAPER NUMBER
3746	

NOTIFICATION DATE	DELIVERY MODE
03/17/2011	ELECTRONIC

Please find below and/or attached an Office communication concerning this application or proceeding.

The time period for reply, if any, is set in the attached communication.

Notice of the Office communication was sent electronically on above-indicated "Notification Date" to the following e-mail address(es):

jcartee@kmob.com
efiling@kmob.com
eOAPilot@kmob.com

UNITED STATES PATENT AND TRADEMARK OFFICE

Commissioner for Patents
United States Patent and Trademark Office
P.O. Box 1450
Alexandria, VA 22313-1450
www.uspto.gov

KNOBBE MARTENS OLSON & BEAR LLP
2040 MAIN STREET
FOURTEENTH FLOOR
IRVINE CA 92614

In re Application of	:
EXNER, MARK et al	: DECISION ON REQUEST TO
Application No. 13/033,527	: PARTICIPATE IN PATENT
Filed: Feb. 23, 2011	: PROSECUTION HIGHWAY
Attorney Docket No. FESS.005C1	: PILOT PROGRAM AND PETITION
For: FLOOD WATER REMOVAL SYSTEM	: TO MAKE SPECIAL UNDER
	: 37 CFR 1.102(a)

This is a decision on the request to participate in the Patent Prosecution Highway (PPH) program and the petition under 37 CFR 1.102(a), filed March 15, 2011 to make the above-identified application special.

The request and petition are granted.

A grantable request to participate in the PPH program and petition to make special require:
(1) The U.S. application must disclose an eligible relationship to one or more PCT applications filed in the JPO, EPO, KIPO or USPTO;
(2) Applicant must submit a copy of the allowable/patentable claim(s) from the PCT application(s) latest international work product (the written opinion or the IPER) along with an English translation thereof and a statement that the English translation is accurate;
(3) All the claims in the U.S. application must sufficiently correspond or be amended to sufficiently correspond to the allowable/patentable claim(s) in the PCT application(s);
(4) Examination of the U.S. application has not begun;
(5) Applicant must submit a copy of the latest international work product from the PCT application containing the allowable/patentable claim(s) along with an English translation thereof and a statement that the English translation is accurate; and
(6) Applicant must submit an IDS listing the documents cited by the PCT examiner in the international work product along with copies of documents except U.S. patents or U.S. patent application publications.

In light of the petition being properly submitted, the request to participate in the PPH program and the petition comply with the above requirements. Accordingly, the above-identified application has been accorded "special" status.

The applicant is encouraged to cite and submit all relevant prior art references, if any, to facilitate examination in this application.

Other inquiries concerning the examination or status of the application should be directed to Devon Kramer, the SPE of Art Unit 3746 at 571-272-7118 for Class 417/199 and also accessible in the PAIR system at http://www.uspto.gov/ebc.index.html.

All other inquiries concerning the examination or status of the application should be directed to the Patent Application Information Retrieval (PAIR) system.

This application will be forwarded and docketed to an examiner for action on the merits commensurate with this decision.

Telephone inquiries concerning this decision should be directed to Henry C. Yuen, at 571-272-4856.

The petition is **granted.**

/Henry C. Yuen/

Henry C. Yuen, Special Programs Examiner
Technology Center 3700 – Mechanical Engineering,
Manufacturing and Products
571-272-4856

UNITED STATES PATENT AND TRADEMARK OFFICE

Commissioner for Patents
United States Patent and Trademark Office
P.O. Box 1450
Alexandria, VA 22313-1450
www.uspto.gov

KILPATRICK TOWNSEND & STOCKTON LLP/Apple
TWO EMBARCADERO CENTER
8TH FLOOR
SAN FRANCISCO, CA 94111-3834

MAILED
FEB 22 2012
OFFICE OF PETITIONS

In re Application of	: DECISION ON REQUEST TO
Min Chul Kim, et. al.	: PARTICIPATE IN THE PATENT
Application No.: 13/033,562	: PROSECUTION HIGHWAY
Filed: February 23, 2011	: PROGRAM AND PETITION
Attorney Docket No.: 90911-799345	: TO MAKE SPECIAL UNDER
For: HIGH-SPEED CONNECTOR	: 37 CFR 1.102(a)
INSERTS AND CABLES	:

This is a decision on the request to participate in the PCT Patent Prosecution Highway (PCT-PPH) pilot program and the petition under 37 CFR 1.102(a), filed on December 20, 2011, to make the above-identified application special.

The request and petition are **DISMISSED**.

Discussion

A grantable request to participate in the PCT-PPH pilot program and petition to make special require:

(1) The U.S. application must have an eligible relationship to one or more PCT applications where the ISA or IPEA are the Australia, Austria, EPO, Finland, JPO, KIPO, NPI, NBPR, Spain, Sweden, USPTO, or CHINA;

(2) At least one claim in the PCT application has novelty, inventive step, and industrial applicability and must be free of any observations in Box VIII in the latest work product in the international stage or applicant must identify and explain why the claim(s) is/are not subject to the observation in Box VIII;

(3) Applicant must submit a copy of the claim(s) from the PCT application(s) that have novelty, inventive step, and industrial applicability along with an English translation thereof and a statement that the English translation is accurate, if the claims are not in the English language;

(4) All the claims in the U.S. application must sufficiently correspond or be amended to sufficiently correspond to the claim(s) that have novelty, inventive step, and industrial applicability in the PCT application(s);

(5) Examination of the U.S. application has not begun;

(6) Applicant must submit a copy of the latest international work product from the PCT application indicating that the claim(s) have novelty, inventive step, and industrial applicability along with an English translation thereof.

(7) Applicant must submit an IDS listing the documents cited by the PCT examiner in the international work product along with copies of documents except U.S. patents or U.S. patent application publications.

(8) Applicant is required to submit a claims correspondence table in English which indicates how all the claims in the U.S. application correspond to the claims indicated as having novelty, inventive step and industrial applicability in the latest international work product.

Requirements (1), (3-8) above are considered to have been met. However, the request to participate in the PPH pilot program and petition fails to meet requirement (2).

Regarding the requirement of condition (2), applicant has failed to identify and explain why the claims are not subject to the observation in Box VIII of the Written Opinion (PCT/ISA/237). Therefore, the present request and petition cannot be granted at this time.

Applicant is given **ONE** opportunity within a time period of **ONE MONTH or THIRTY DAYS**, whichever is longer, from the mailing date of this decision to correct the deficiencies. **NO EXTENSION OF TIME UNDER 37 CFR 1.136 IS PERMITTED.** If the deficiencies are not corrected with the time period given, the application will await action in its regular turn.

Response must be filed via the Electronic Filing System (EFS) using the document description: Petition to make special under PCT – Patent Pros Hwy. Any preliminary amendments and IDS submitted with the PPH documents must be separately indexed as a preliminary amendment and IDS, respectively.

Telephone inquiries concerning this decision should be directed to the undersigned at (571) 272-3226. All other inquiries concerning the examination or status of the application is accessible in the PAIR system at http://www.uspto.gov/ebc/index.html.

/Andrea Smith/
Andrea Smith
Petitions Examiner
Office of Petitions

I hereby certify that this correspondence is being filed via EFS-Web with the United States Patent and Trademark Office on March 22, 2012.

KILPATRICK TOWNSEND & STOCKTON LLP

By: /Sharyl Brown/
Sharyl Brown

PATENT
Docket No.: 90911-799345
Client Ref. No.: P10864US1

IN THE UNITED STATES PATENT AND TRADEMARK OFFICE

In re application of:

KIM, Min Chul et al.

Application No.: 13/033,562

Filed: February 23, 2011

For: HIGH-SPEED CONNECTOR INSERTS AND CABLES

Customer No.: 65656

Confirmation No.: 9125

Examiner: Timothy J. Thompson

Art Unit: 2835

REQUEST FOR RECONSIDERATION

Office of Petitions
Commissioner for Patents
P.O. Box 1450
Alexandria, VA 22313-1450

Commissioner:

On February 22, 2012, a Decision on Petition Pursuant to 37 C.F.R. 1.102(a) ("the Decision") was mailed by the U.S.P.T.O. This decision was in response to Applicants' request to participate in the PCT Patent Prosecution Highway (PCT-PPH) pilot program and the petition under 37 C.F.R. 1.102(a), filed on December 20, 2011 to make the above-identified application special.

The Decision states that the request and petition are dismissed. Reconsideration of the Decision is respectfully requested in view of the following remarks.

REMARKS

The Decision states that the request to participate in the PPH pilot program and petition fails to meet requirement (2). Specifically, the Decision states that the applicant has failed to identify and explain why the claims are not subject to the observation in Box VIII of the PCT Written Opinion of the International Searching Authority for the PCT priority application (PCT/US2011/042634) of the present application ("Written Opinion").

BOX VIII OF THE WRITTEN OPINION

Regarding box VIII, the Written Opinion states that "the application does not meet the requirements of Article 6 PCT, because claims 1-6 are not clear." Without conceding the merits of the observation in Box VIII of the Written Opinion, Applicants submits that the remarks below identify and explain why the claims, as amended via the preliminary amended filed herewith, are not subject to the observation in Box VIII.

Claim 1

With regard to claim 1, the Written Opinion states "the method is presented as a method of manufacturing 'a connector insert' but it is not clear how the method steps of claims 1-6 relate to a connector insert.

In the interest of expediency and providing greater clarity, claim 1 has been amended in a preliminary amended filed herewith. For example, amended claim 1 recites:

> *A method of manufacturing a cable assembly, the cable assembly comprising a connector insert and a cable, the method comprising: separating a plurality of fibers in a ~~cable~~ shield layer of the cable from a plurality of metallic wires; forming a solder connection between the plurality of metallic wires to a shield of the connector insert; placing a cap over the solder connection; and crimping the cap.*

It is appears that the observation in Box VIII was related to the use of "connector insert" in claim 1, instead of "cable assembly" as shown in the specification. Claim 1 is amended by a preliminary amendment filed herewith to recite a "cable assembly, the cable assembly comprising a connector insert and a cable" instead of a "connector insert." It is believed that this amendment addresses any supposed lack clarity asserted in the observation in Box VIII. Furthermore, the present application provides a detailed explanation regarding how the steps of claim 1 may be implemented to manufacture the cable assembly of claim 1. (*See, e.g.,* Figs. 1-4 and the corresponding sections of the specification). Accordingly, the claims should not be subject to the observations in Box VIII of the Written Opinion for the reasons identified and explained above.

Claims 5 and 6

With regard to claims 5 and 6, the Written Opinion states "it is not clear to the skilled person what is meant with the vague wording 'applying forces in a plurality of directions' or 'in four directions.'"

In the interest of expediency, claims 5 and 6 have been canceled in a preliminary amendment filed herewith. Hence, the observations in Box VIII of the Written Opinion regarding claim 5 and 6 no longer apply to the present application and require no further identification or explanation.

In view of the foregoing, claims 1, 5 and 6 should not be subject to the observations in Box VIII of the Written Opinion. Reconsideration of the Decision is respectfully requested.

CONCLUSION

If the Examiner believes a telephone conference would expedite consideration of this request and petition or otherwise expedite prosecution, please telephone the undersigned at (650) 752-2478.

Respectfully submitted,

/Ryan C. Sydenham/

Ryan C. Sydenham
Reg. No. 65,409

KILPATRICK TOWNSEND & STOCKTON LLP
Two Embarcadero Center, Eighth Floor
San Francisco, California 94111-3834
Tel: (650) 326-2400
Fax: (415) 576-0300
R2S:srb

64034268 v1

UNITED STATES PATENT AND TRADEMARK OFFICE

Commissioner for Patents
United States Patent and Trademark Office
P.O. Box 1450
Alexandria, VA 22313-1450
www.uspto.gov

STAINBROOK & STAINBROOK, LLP
412 AVIATION BOULEVARD
SUITE H
SANTA ROSA, CA 95403

MAILED
APR 15 2011
OFFICE OF PETITIONS

In re Application of	:	
Michael W. Lindstrom	:	
Application No. 13/033,563	:	ON PETITION
Filed: February 23, 2011	:	
Attorney Docket No. 01249.P1US	:	

This is a decision on the petition under 37 CFR 1.102(c)(1), filed February 25, 2011, to make the above-identified application special based on applicant's age as set forth in M.P.E.P. § 708.02, Section IV.

The petition is **GRANTED**.

A grantable petition to make an application special under 37 CFR 1.102(c)(1) and MPEP § 708.02, Section IV: Applicant's Age must be accompanied by evidence showing that at least one of the applicants is 65 years of age, or more, such as a birth certificate or a statement by applicant. No fee is required.

The instant petition includes a statement (PTO/SB/130 form) by the applicant's attorney that the applicant is 65 years of age or more. Accordingly, the above-identified application has been accorded "special" status.

Telephone inquiries concerning this decision should be directed to the undersigned at 571-272-6059. All other inquiries concerning either the examination or status of the application should be directed to the Technology Center.

This matter is being referred to the Technology Center Art Unit 3617 for action on the merits commensurate with this decision.

A. Kelley

Alicia Kelley
Petitions Examiner
Office of Petitions

UNITED STATES PATENT AND TRADEMARK OFFICE

UNITED STATES DEPARTMENT OF COMMERCE
United States Patent and Trademark Office
Address: COMMISSIONER FOR PATENTS
P.O. Box 1450
Alexandria, Virginia 22313-1450
www.uspto.gov

APPLICATION NO.	FILING DATE	FIRST NAMED INVENTOR	ATTORNEY DOCKET NO.	CONFIRMATION NO.
13/033,619	02/24/2011	JEFFREY JOHN HANFT	00038.00003AE1	9269

55952 7590 05/27/2011
Raj Abhyanker, P.C.
1580 West, El Camino Real, Suite 8
Mountain View, CA 94040

EXAMINER
LEE, BENJAMIN C

ART UNIT	PAPER NUMBER
2612	

NOTIFICATION DATE	DELIVERY MODE
05/27/2011	ELECTRONIC

Please find below and/or attached an Office communication concerning this application or proceeding.

The time period for reply, if any, is set in the attached communication.

Notice of the Office communication was sent electronically on above-indicated "Notification Date" to the following e-mail address(es):

docketing@rajpatent.com

UNITED STATES PATENT AND TRADEMARK OFFICE

COMMISSIONER FOR PATENTS
UNITED STATES PATENT AND TRADEMARK OFFICE
P.O. BOX 1450
ALEXANDRIA, VA 22313-1450
www.uspto.gov

Raj Abhyanker, P.C.
1580 West, El Camino Real, Suite 8
Mountain View CA 94040

In re Application of:
HANFT, JEFFREY JOHN
Serial No.: 13/033,619
Filed: February 24, 2011

Title: **UTILITY METER TAMPER MONITORING SYSTEM AND METHOD**

DECISION ON PETITION TO MAKE SPECIAL FOR NEW APPLICATION UNDER 37 C.F.R. § 1.102 & M.P.E.P. § 708.02

The petition to make the application special filed February 24, 2011 is **GRANTED**.

The application is eligible for accelerated examination and the petition complies with the conditions for granting the application special status pursuant to the "Change to Practice for Petitions in Patent Applications to Make Special and for Accelerated Examination" published June 26, 2006, in the Federal Register. (71 Fed. Reg. 36323).

The prosecution of the instant application will be conducted expeditiously according to the following guidelines.

1. The application will be docketed to an examiner and taken up for action within two weeks of the date of this decision.

2. Restriction Practice:
   If the examiner determines that the claims are not directed to a single invention, a telephone request to elect one single invention will be made pursuant to MPEP 812.01. As a prerequisite to the grant of this petition, the applicant has agreed to make an oral election, by telephone, without traverse. If the applicant refuses to make an election without traverse, or the examiner cannot reach the applicant after a reasonable effort, the examiner will treat the first claimed invention (invention defined by claim 1) as having being constructively elected without traverse for examination.

3. Office action:

If it is determined that, after appropriate consultation, there is a potential rejection or any other issue to be addressed, the examiner will telephone the applicant and arrange an interview to discuss and resolve the issue. An Office action, other than a Notice of Allowance and Fee(s) Due (Notice of Allowance), will not be issued unless either: 1) an interview was conducted but did not result in agreed to action that places the application in condition for allowance, or, 2) a determination is made that an interview would be unlikely to result in the application being placed in condition for allowance, and 3) an internal conference has been held to review any rejection of any claim.

4. Time for Reply:
An Office action other than a Notice of Allowance or a final Office action will set a shortened statutory period of one month or thirty days, whichever is longer, for reply with no extension of time available under 37 CFR 1.136(a). Failure to timely file a reply within this non-extendible period for reply will result in the abandonment of the application.

5. Reply by Applicant:
A timely reply to an Office action other than the Notice of Allowance must be submitted electronically via EFS or EFS-web and limited to addressing the rejections, objections and requirement made. Any amendment that attempts to: 1) add claims which would result in more than three pending independent claims or more than twenty pending total claims; 2) present claims not encompassed by the pre-examination search or an updated accelerated examination support document; or 3) present claims that are directed a non-elected invention or an invention other than that previously claimed and examined in the application, will be treated as not fully responsive and will not be entered.

   For any amendment to the claims (including any new claim) that is not encompassed by the accelerated examination support document, applicant must provide an updated accelerated examination support document that encompasses the amended or new claims at the time of filing of the amendment.

   To proceed expeditiously with the examination, it is recommended that a reply with amendments made to any claim or with any new claim being added be accompanied by an updated accelerated examination support document or a statement explaining how the amended or new claim is supported by the original accelerated examination support document.

6. Information Disclosure Statement (IDS):
Any IDS filed during prosecution must be submitted electronically via EFS or EFS-web, accompanied by an updated accelerated examination support document, and be in compliance with 37 CFR 1.97 and 1.98.

7. Post-Allowance Processing:
To expedite processing of the allowed application into a patent, the applicant must: 1) pay the required fees within one month of the date of the Notice of Allowance, and 2) not

file any post allowance papers not required by the Office. In no event may the issue fee be paid and accepted later than three months from the date of the Notice of Allowance.

8. After-Final and Appeal Procedures:
   To expedite prosecution, after receiving the final Office action, applicant must: 1) promptly file a notice of appeal, an appeal brief and appeal fees; and 2) not request a pre-appeal brief conference.

   Any amendment, affidavit or other evidence filed after final Office action must comply with applicable rules and the requirements outlined in numbered paragraphs 5 and 6 above.

   On appeal, the application will proceed according to normal appeal procedures. After appeal, the application will again be treated special.

9. Proceedings Outside the Normal Examination Process:
   If the application becomes involved in a proceeding that is outside the normal examination process (e.g., a secrecy order, national security review, interference proceeding, petitions under 37 CFR 1.181, 182 or 183), the application will be treated special before and after such proceeding.

10. Final Disposition:
    The twelve month goal of this accelerated examination procedure ends with a final disposition. The mailing of a final Office action, a Notice of Allowance, the filing of a Notice of Appeal, or the filing of a Request for Continued Examination (RCE) is the final disposition.

If, during prosecution, a paper is not filed electronically using EFS-web, a reply is filed but is not fully responsive, the application is involved in an appeal, or a proceeding outside normal examination process, the application will still be examined expeditiously, however, the final disposition may occur more than twelve months from the filing of the application.

Any inquiry regarding this decision should be directed to Ken Wieder, Quality Assurance Specialist, at (571) 272-2986.

/Kenneth A. Wieder/

Kenneth A. Wieder
Quality Assurance Specialist
Technology Center 2600
Communications

UNITED STATES PATENT AND TRADEMARK OFFICE

UNITED STATES DEPARTMENT OF COMMERCE
United States Patent and Trademark Office
Address: COMMISSIONER FOR PATENTS
P.O. Box 1450
Alexandria, Virginia 22313-1450
www.uspto.gov

APPLICATION NO.	FILING DATE	FIRST NAMED INVENTOR	ATTORNEY DOCKET NO.	CONFIRMATION NO.
13/033,735	02/24/2011	Yutaka Ito	4605-103888	9474

28289 7590 05/26/2011
THE WEBB LAW FIRM, P.C.
ONE GATEWAY CENTER
420 FT. DUQUESNE BLVD, SUITE 1200
PITTSBURGH, PA 15222

EXAMINER
BARRY, CHESTER T

ART UNIT	PAPER NUMBER
1778	

NOTIFICATION DATE	DELIVERY MODE
05/26/2011	ELECTRONIC

Please find below and/or attached an Office communication concerning this application or proceeding.

The time period for reply, if any, is set in the attached communication.

Notice of the Office communication was sent electronically on above-indicated "Notification Date" to the following e-mail address(es):

patents@webblaw.com

UNITED STATES PATENT AND TRADEMARK OFFICE

Commissioner for Patents
United States Patent and Trademark Office
P.O. Box 1450
Alexandria, VA 22313-1450
www.uspto.gov

May 25, 2011 WG

In re application of Yutaka Ito et al. Serial No. 13/033,735 Filed: February 24, 2011 For: METHOD AND APPARATUS FOR GENERATING FRESH WATER, AND METHOD AND APPARATUS FOR DESALINATING SEA WATER	:	DECISION ON REQUEST TO PARTICIPATE IN PATENT PROSECUTION HIGHWAY PROGRAM AND PETITION TO MAKE UNDER 37 CFR 1.102(a)

This is a decision on the request to participate in the Patent Prosecution Highway (PPH) program and the petition under 37 CFR 1.102(a) to make the above-identified application special filed March 14, 2011.

The request and petition are **GRANTED**.

A grantable request to participate in the PPH program and petition to make special require:

(1) The U.S. application must validly claim priority under 35 U.S.C. 119(a) to one or more applications filed in the JPO, note where the JPO application with similar claims is not the same application from which the U.S. application claims priority that the applicant must identify the relationship between the JPO application with similar claims and the JPO priority application;

(2) Applicant must submit a copy of:
   a. The allowable/patentable claim(s) from the JPO application(s) or if a copy of the allowable/patentable claims is available via the Dossier Access System (DAS) applicant may request the USPTO to obtain a copy from DAS; however, if the USPTO is unable to obtain a copy from the DAS, the applicant will be required to submit a copy;
   b. An English translation of the allowable/ patentable claim(s), if applicable; and
   c. A statement that the English translation is accurate, if applicable;

(3) Applicant must:
   a. Ensure all the independent claims in the U.S. application must sufficiently correspond or be amended to sufficiently correspond to the allowable/patentable claim(s) in the JPO application(s); and
   b. Submit a claims correspondence table in English;

(4) Examination of the U.S. application has not begun;

(5) Applicant must submit:
   a. Documentation of prior office action:
      i. a copy of the office action(s) just prior to the "Decision to Grant a Patent" from each of the JPO application(s) containing the allowable/patentable claims(s) or
      ii. if the allowable/patentable claim(s) are from "Notification of Reasons for Refusal" then the Notification of Reasons for Refusal or
      iii. if the JPO application is a first action allowance then no office action from the JPO is necessary should be indicated on the request/petition form;
      Further, if a copy of the documents from (i) or (ii) is available via the Dossier Access System (DAS), applicant may request the USPO obtain a copy from the DAS; however, if the USPTO is unable to obtain a copy of the DAS, the applicant will be required to submit a copy; and
   b. An English language translation of the JPO Office action from (5)(a)(i)-(ii) above if applicable; and

(6) Applicant must submit:
   a. An IDS listing the documents cited by the JPO examiner in the JPO office action (unless already submitted in this application)
   b. Copies of documents except U.S. patents or U.S. patent application publications (unless already submitted in this application).

The request to participate in the PPH program and petition comply with the above requirements. Accordingly, the above-identified application has been accorded "special" status.

The application is being forwarded to the examiner for action on the merits commensurate with this decision.

Any inquiry regarding this decision should be directed to Walter D. Griffin, Supervisory Patent Examiner, at (571) 272-1447.

All other inquiries concerning the examination or status of the application is accessible in the PAIR system at http://www.uspto.gov/ebc/index.html.

/Walter D. Griffin/

Walter D. Griffin
Supervisory Patent Examiner
Technology Center 1700

Doc Code: PET.GREEN
Document Description: Petition for Green Tech Pilot

PTO/SB/420 (03-11)

PETITION TO MAKE SPECIAL UNDER THE GREEN TECHNOLOGY PILOT PROGRAM

Attorney Docket Number: 10694.076.00	Application Number (if known): 13/033,745	Filing date: February 24, 2011

First Named Inventor: Kyung Wook Park

Title: Light Emitting Device, Method of Manufacturing the Light Emitting Device, Light Emitting Device Package, and Lighting Unit

APPLICANT HEREBY REQUESTS TO PARTICIPATE IN THE GREEN TECHNOLOGY PILOT PROGRAM FOR THE ABOVE-IDENTIFIED APPLICATION. See Instruction Sheet on page 2.

This petition must be timely filed electronically using the USPTO electronic filing system, EFS-Web.

1. By filing this petition:

   Applicant is requesting early publication: Applicant hereby requests early publication under 37 CFR 1.219 and the publication fee set forth in 37 CFR 1.18(d) accompanies this request.

2. By filing this petition: applicant is agreeing to make an election without traverse in a telephonic interview and elect an invention that meets the eligibility requirements for the Green Technology Pilot Program, if the Office determines that the claims are not obviously directed to a single invention. See Instruction Sheet.

3. This request is accompanied by statements of special status for the eligibility requirement.

4. The application contains no more than three (3) independent claims and twenty (20) total claims.

5. The application does not contain any multiple dependent claims.

6. Other attachments: Statement In Support of Petition to Make Special

Signature /Randall C. Pyles/	Date May 18, 2011
Name (Print/Typed) Randall C. Pyles	Registration Number 66,523

Note: Signatures of all the inventors or assignees of record of the entire interest or their representative(s) are required in accordance with 37 CFR 1.33 and 11.18. Please see 37 CFR 1.4(d) for the form of the signature. If necessary, submit multiple forms for more than one signature, see below.*

☒ *Total of 1 forms are submitted.

If you need assistance in completing the form, call 1-800-PTO-9199 and select option 2.

Docket No.: 10694.076.00
(PATENT)

IN THE UNITED STATES PATENT AND TRADEMARK OFFICE

In re Patent Application of: PARK, Kyung Wook	Customer No.: 30827
Application No.: 13/033,745	Confirmation No.:9488
Filed: February 24, 2011	Art Unit: TBA
For: LIGHT EMITTING DEVICE, METHOD OF MANUFACTURING THE LIGHT EMITTING DEVICE, LIGHT EMITTING DEVICE PACKAGE, AND LIGHTING UNIT	Examiner: TBA

MS Petitions
Commissioner for Patents
P.O. Box 1450
Alexandria, VA 22313-1450

STATEMENT IN SUPPORT OF PETITION TO MAKE SPECIAL UNDER THE GREEN TECHNOLOGY PILOT PROGRAM

Sir:

This Statement of Special Status is filed in conjunction with a Petition to Make Special Under the Green Technology Pilot Program.

The above-referenced application pertains to environmental quality, i.e. enhancing the quality of the environment by using light emitting diode (LED). Special status is sought because the invention materially contributes to the more efficient utilization and conservation of energy resources by using LED which provides lower power consumption, a longer life span and significant energy saving.

Dated: May 18, 2011

Respectfully submitted,

By *__/Randall C. Pyles/*_____

Randall C. Pyles
Registration No.: 66,523
McKENNA LONG & ALDRIDGE LLP
1900 K Street, N.W.
Washington, DC 20006
(202) 496-7500
Attorneys for Applicant

UNITED STATES PATENT AND TRADEMARK OFFICE

UNITED STATES DEPARTMENT OF COMMERCE
United States Patent and Trademark Office
Address: COMMISSIONER FOR PATENTS
P.O. Box 1450
Alexandria, Virginia 22313-1450
www.uspto.gov

APPLICATION NO.	FILING DATE	FIRST NAMED INVENTOR	ATTORNEY DOCKET NO.	CONFIRMATION NO.
13/033,745	02/24/2011	Kyung Wook Park	10694.076.00	9488

30827 7590 05/25/2011
MCKENNA LONG & ALDRIDGE LLP
1900 K STREET, NW
WASHINGTON, DC 20006

EXAMINER

ART UNIT	PAPER NUMBER
2811	

MAIL DATE	DELIVERY MODE
05/25/2011	PAPER

Please find below and/or attached an Office communication concerning this application or proceeding.

The time period for reply, if any, is set in the attached communication.

UNITED STATES PATENT AND TRADEMARK OFFICE

Commissioner for Patents
United States Patent and Trademark Office
P.O. Box 1450
Alexandria, VA 22313-1450
www.uspto.gov

MCKENNA LONG & ALDRIDGE LLP
1900 K STREET, NW
WASHINGTON DC 20006

In re Application of	:	
PARK et al.	:	DECISION ON PETITION
Application No. 13/033,745	:	TO MAKE SPECIAL UNDER
Filed: February 24, 2011	:	THE GREEN TECHNOLOGY
Attorney Docket No. 10694.076.00	:	PILOT PROGRAM

This is a decision on the petition under 37 CFR 1.102, filed on May 18, 2011, to make the above-identified application special under the pilot program for applications pertaining to Green Technologies as set forth 74 Federal Register Notice 64666 (December 8, 2009) and amended by 75 Federal Register Notice 28554 (May 21, 2010) and 75 Federal Register Notice 69049 (November 10, 2010).

The petition is **GRANTED**.

A grantable petition to make an application special under 37 CFR 1.102 and the pilot program as set forth in 74 FR 64666 must be directed to a nonprovisional application filed under 35 USC 111(a) or be a national stage entry under 35 USC 371, exclusive of any reissue applications.

In order to qualify for special status, the following requirements must be met. 1) The application must have no more than 3 independent claims and no more than 20 total claims. 2) The application must not contain any multiple dependent claims. 3) The petition must state the basis for seeking special status, i.e., the claimed invention either: A) materially enhances the quality of the environment or B) materially contributes to: i) the discovery or development of renewable energy resources, ii) the more efficient utilization and conservation of energy resources, or iii) greenhouse gas emission reduction. 4) If the disclosure is not clear on its face that the claimed invention materially contributes under category (A) or (B), the petition must be accompanied by a statement by the applicant, assignee, or an attorney/agent registered to practice before the Office explaining how the materiality standard is met. 5) A statement that applicant will agree to make an election without traverse in a telephonic interview if a restriction requirement is made by the examiner. 6) The petition to make special must be filed electronically. 7) The petition must be filed at least one day prior to the date that a first Office Action appears in the Patent Application Information Retrieval (PAIR) system. 8) The petition must be accompanied by a request for early publication in compliance with 37 CFR 1.219 and include the publication fee as set forth in 37 CFR 1.18(d).

The requirement for a fee for consideration of the petition to make special for applications pertaining to Green Technologies has been waived.

The instant petition complies with items 1 – 8 above. Accordingly, the above-identified application has been accorded "special" status.

Telephone inquires concerning this decision should be directed to Lee W. Young at 571-272-4549.

The application is being forwarded to the Technology Center Art Unit 2811 for action on the merits commensurate with this decision.

Lee W. Young
Quality Assurance Specialist
Technology Center 2800

UNITED STATES PATENT AND TRADEMARK OFFICE

Commissioner for Patents
United States Patent and Trademark Office
P.O. Box 1450
Alexandria, VA 22313-1450
www.uspto.gov

MAILED
APR 12 2011
OFFICE OF PETITIONS

ROSENBERG, KLEIN & LEE
3458 ELLICOTT CENTER DRIVE-SUITE 101
ELLICOTT CITY MD 21043

In re Application	:	
Jr Yuan Huang	:	
Application No. 13/033,850	:	NOTICE
Filed: February 24, 2011	:	
Attorney Docket No. MR2349-2003/CIP	:	

This is a notice regarding your request for acceptance of a fee deficiency submission under 37 CFR 1.28 filed March 1, 2011. On September 1, 1998, the Court of Appeals for the Federal Circuit held that 37 CFR 1.28(c) is the sole provision governing the time for correction of the erroneous payment of the issue fee as a small entity. **See DH Technology v. Synergystex International, Inc. 154 F.3d 1333, 47 USPQ2d 1865 (Fed. Cir. Sept. 1, 1998).**

The Office no longer investigates or rejects original or reissue applications under 37 CFR 1.56. **1098 Off. Gaz. Pat. Office 502 (January 3, 1989).** Therefore, nothing in this Notice is intended to imply that an investigation was done.

Your fee deficiency submission under 37 CFR 1.28 is hereby accepted. The petition is **GRANTED**.

This application is no longer entitled to small entity status. Accordingly, all future fees paid in this application must be paid at the large entity rate.

This file is being forwarded to Technology Center 1711.

Telephone inquiries related to this decision should be directed to the Kimberly Inabinet at (571) 272-4618.

/Kimberly Inabinet/
Kimberly Inabinet
Petitions Examiner
Office of Petitions

UNITED STATES PATENT AND TRADEMARK OFFICE

COMMISSIONER FOR PATENTS
UNITED STATES PATENT AND TRADEMARK OFFICE
P.O. BOX 1450
ALEXANDRIA, VA 22313-1450
WWW.USPTO.GOV

Paper No.

NOVA Chemicals Inc./Karen S. Lockhart
1555 Coraopolis Heights Road
Moon Township PA 15108

MAILED

JUN 17 2011

OFFICE OF PETITIONS

In re Application of	:	
Krupinski and Vignola	:	
Application No. 13/033,870	:	DECISION ON PETITION
Filed: February 24, 2011	:	PURSUANT TO
Attorney Docket No.: 9255 USA-	:	37 C.F.R. § 1.47(A)
NONP-DIV/CIP	:	
Title: INTERPOLYMER RESIN	:	
PARTICLES	:	

This is in response to the petition pursuant to 37 C.F.R. § 1.47(a), filed on May 12, 2011.

This petition is **DISMISSED.**

On February 24, 2011, this application was filed, identifying Krupinski and Vignola as joint inventors. No oath or declaration was included on filing. On March 18, 2011, a "Notice to File Missing Parts of Nonprovisional Application - Filing Date Granted" (notice) was mailed, requiring a fully executed oath or declaration. The notice set a two-month period for response.

On May 12, 2011, Petitioner submitted this petition in response to the notice, along with, *inter alia*, the petition fee, the fee that is associated with the late submission of this petition, a declaration that has been executed by joint inventor Vignola, the last-known address of the non-signing inventor,[1] and an assertion that the non-signing inventor has refused to execute the declaration.[2]

A grantable petition pursuant to 37 C.F.R. § 1.47(a) requires:

(1) the petition fee of $200;
(2) a surcharge of either $65 or $130 if the petition is not filed at the time of filing the application, as set forth in 37 C.F.R.

1 See declaration, page 3.
2 Petition, page 3, paragraph 8 and Matz statement of facts, page 2, paragraph 7.

§ 1.16(f);

(3) a statement of the last known address of the non-signing inventor;

(4) either

a) proof that a copy of the entire application (specification, claims, drawings, and the oath or declaration) was sent or given to the non-signing inventor for review and proof that the non-signing inventor refuses to join in the application or

b) proof that the non-signing inventor cannot be found or reached after diligent effort, and;

(5) a declaration which complies with 37 C.F.R. § 1.63.

Petitioner has met requirements (1) - (3) and (5) of 37 C.F.R. § 1.47(a). Requirement (4) has not been satisfied, as will now be pointed out.

Regarding the fourth requirement above, the record does not support a finding that a complete copy of the application was sent to the last-known residential addresses of the non-signing inventor.

Petitioner has indicated that the package that was physically mailed to the non-signing inventor consisted of an "Oath and Declaration and Assignment,"[3] and no mention is made as to the inclusion of a complete copy of the application. However, Petitioner has also indicated that "a copy of the present application…[has] been provided to co-inventor Steven M. Krupinski."[4] These two statements are in conflict.

As such, the record is unclear as to whether a complete copy of the application was sent to the last-known address of the non-signing inventor. Where a refusal of the inventor to sign the application papers is alleged, the Office requires the petitioner to establish that a bona fide attempt was made to mail a complete copy of the application, which entails the specification, claims, drawings, and oath or declaration.[5] It follows that since it has not been shown that a complete copy of the application was sent to the non-signing inventor, one cannot refuse to sign something which one has not seen. A

3 Petition, page 2, paragraph 7 and Matz statement of facts, page 1, paragraph 3.
4 Petition, page 3.
5 See MPEP § 409.03(d).

refusal by an inventor to sign an oath or declaration when the inventor has not been presented with the application papers does not itself suggest that the inventor is refusing to join the application unless it is clear that the inventor understands exactly what he or she is being asked to sign and refuses to accept the application papers. It is reasonable to require that the inventor be presented with the application papers before a petition under Rule 1.47 is granted since such a procedure ensures that the inventor is apprised of the application to which the oath or declaration is directed.[6]

If a complete copy of the application was sent to the last-known address of the non-signing inventor, on renewed petition, Petitioner should include a statement of facts which includes the facts surrounding the mailing and the result of said mailing.

If a complete copy of the application was not sent to the last-known address of the non-signing inventor, before filing the renewed petition, Petitioner should mail a complete paper[7] copy of the application to the last known residential address of the non-signing joint inventor, and provide him with a reasonable period of time to respond before submitting the renewed petition.

Petitioner should note that any statement that pertains to the presentation should be made by one having firsthand knowledge of the event. Statements based on hearsay are not normally accepted.

Any response to this decision must be submitted within **TWO MONTHS** from the mail date of this decision. Extensions of time under 37 C.F.R. § 1.136(a) are permitted. The reply should include a cover letter entitled "Renewed Petition pursuant to 37 C.F.R. § 1.47(a)". This is not a final agency action within the meaning of 5 U.S.C § 704.

Any response to this decision should indicate in a prominent manner that the attorney handling this matter is Paul Shanoski,

---

6 In re Gray, 115 USPQ 80 (Comm'r Pat. 1956).
7 The transmission of documents via Email, while a common practice, can be problematic. Transmission and receipt of documents-whether in image, word-processing, spreadsheet or other form-can be affected by differences in software generation between the sender and recipient(s), and other interferences include but are not limited to sender's and recipient's Internet service provider's (ISP) and/or office/personal security firewall systems. Thus, in the absence of an express statement from a non-signing inventor(s) that he/she/they have received, opened and read a document, unlike a printed page in the language of the recipient there is as of this writing no basis to presume that an e-mailed document was in a form that can be read and comprehended.

and may be submitted by mail,[8] hand-delivery,[9] or facsimile.[10] Registered users of EFS-Web may alternatively submit a response to this decision via EFS-Web.[11]

If responding by mail, Petitioner is advised not to place the undersigned's name on the envelope. Only the information that appears in the footnote should be included - adding anything else to the address will delay the delivery of the response to the undersigned.

Telephone inquiries regarding this decision should be directed to the undersigned at (571) 272-3225.[12]

/Paul Shanoski/
Paul Shanoski
Senior Attorney
Office of Petitions

---

8 Mail Stop Petition, Commissioner for Patents, United States Patent and Trademark Office, P.O. Box 1450, Alexandria, VA, 22313-1450.
9 Customer Window, Randolph Building, 401 Dulaney Street, Alexandria, VA, 22314.
10 (571) 273-8300- please note this is a central facsimile number.
11 https://sportal.uspto.gov/authenticate/authenticateuserlocalepf.html
12 Petitioner will note that all practice before the Office should be in writing, and the action of the Office will be based exclusively on the written record in the Office. See 37 C.F.R. § 1.2. As such, Petitioner is reminded that no telephone discussion may be controlling or considered authority for any of Petitioner's further action(s).

UNITED STATES PATENT AND TRADEMARK OFFICE

Commissioner for Patents
United States Patent and Trademark Office
P.O. Box 1450
Alexandria, VA 22313-1450
www.uspto.gov

Paper No.

MAILED
JUL 29 2011
OFFICE OF PETITIONS

NOVA Chemicals Inc./Karen S. Lockhart
1555 Coraopolis Heights Road
Moon Township PA 15108

In re Application of Krupinski and Vignola Application No. 13/033,870 Filed: February 24, 2011 Attorney Docket No.: 9255 USA-NONP-DIV/CIP Title: INTERPOLYMER RESIN PARTICLES	:	DECISION ON RENEWED PETITION PURSUANT TO 37 C.F.R. § 1.47(A)

This is in response to the renewed petition pursuant to 37 C.F.R. § 1.47(a), filed on July 20, 2011.

This renewed petition is **DISMISSED.**

On February 24, 2011, this application was filed, identifying Krupinski and Vignola as joint inventors. No oath or declaration was included on filing. On March 18, 2011, a "Notice to File Missing Parts of Nonprovisional Application - Filing Date Granted" (notice) was mailed, requiring a fully executed oath or declaration. The notice set a two-month period for response.

On May 12, 2011, Petitioner submitted an original petition pursuant to 37 C.F.R. § 1.47(a) in response to the notice, along with, *inter alia*, the petition fee, the fee that is associated with the late submission of this petition, a declaration that has been executed by joint inventor Vignola, the last-known address of the non-signing inventor,[1] and an assertion that the non-signing inventor has refused to execute the declaration.[2]

A grantable petition pursuant to 37 C.F.R. § 1.47(a) requires:

(1) the petition fee of $200;
(2) a surcharge of either $65 or $130 if the petition is not filed at the time of filing the application, as set forth in 37 C.F.R.

1 See declaration, page 3.
2 Original petition, page 3, paragraph 8 and Matz statement of facts, page 2, paragraph 7.

§ 1.16(f);

(3) a statement of the last known address of the non-signing inventor;

(4) either

a) proof that a copy of the entire application (specification, claims, drawings, and the oath or declaration) was sent or given to the non-signing inventor for review and proof that the non-signing inventor refuses to join in the application or

b) proof that the non-signing inventor cannot be found or reached after diligent effort, and;

(5) a declaration which complies with 37 C.F.R. § 1.63.

The original petition pursuant to 37 C.F.R. § 1.47(a) was dismissed via the mailing of a decision on June 17, 2011, which indicated that requirements (1) - (3) and (5) of 37 C.F.R. § 1.47(a) have been satisfied.

This renewed petition was filed on July 20, 2011, however **the renewed petition cannot be accepted as it is illegible.** Rule 1.52(a)(1)(v) indicates that all papers that are to become a part of the permanent United States Patent and Trademark Office records in the file of a patent application must be:

> "[p]resented in a form having sufficient clarity and contrast between the paper and the writing thereon to permit the direct reproduction of readily legible copies in any number by use of photographic, electrostatic, photo-offset, and microfilming processes and electronic capture by use of digital imaging and optical character recognition."

Petitioner's submission does not comply with the requirements of Rule 1.52(a)(v). The submission consists of six pages: a four page petition and what appears to be a two-page statement of facts. However, these pages are illegible due to the fact that the text appears black and the background dark gray, and as such, the contrast is such that it renders the documents unable to read. It follows that the content of this submission cannot be discerned by the undersigned.

Any response to this decision must be submitted within **TWO MONTHS** from the mail date of this decision. Extensions of time under 37 C.F.R. § 1.136(a) are permitted. The reply should include a cover letter entitled "Second Renewed Petition pursuant to 37 C.F.R. § 1.47(a)". This is not a final agency action within the meaning of 5 U.S.C § 704.

Any response to this decision should indicate in a prominent manner that the attorney handling this matter is Paul Shanoski, and may be submitted by mail,[3] hand-delivery,[4] or facsimile.[5] Registered users of EFS-Web may alternatively submit a response to this decision via EFS-Web.[6]

If responding by mail, Petitioner is advised not to place the undersigned's name on the envelope. Only the information that appears in the footnote should be included - adding anything else to the address will delay the delivery of the response to the undersigned.

Telephone inquiries regarding this decision should be directed to the undersigned at (571) 272-3225.[7]

/Paul Shanoski/
Paul Shanoski
Senior Attorney
Office of Petitions

---

3 Mail Stop Petition, Commissioner for Patents, United States Patent and Trademark Office, P.O. Box 1450, Alexandria, VA, 22313-1450.
4 Customer Window, Randolph Building, 401 Dulaney Street, Alexandria, VA, 22314.
5 (571) 273-8300: please note this is a central facsimile number.
6 https://sportal.uspto.gov/authenticate/authenticateuserlocalepf.html
7 Petitioner will note that all practice before the Office should be in writing, and the action of the Office will be based exclusively on the written record in the Office. See 37 C.F.R. § 1.2. As such, Petitioner is reminded that no telephone discussion may be controlling or considered authority for any of Petitioner's further action(s).

UNITED STATES PATENT AND TRADEMARK OFFICE

Commissioner for Patents
United States Patent and Trademark Office
P.O. Box 1450
Alexandria, VA 22313-1450
www.uspto.gov

Paper No.

MAILED
AUG 15 2011
OFFICE OF PETITIONS

NOVA Chemicals Inc./Karen S. Lockhart
1555 Coraopolis Heights Road
Moon Township PA 15108

In re Application of	:	
Krupinski and Vignola	:	
Application No. 13/033,870	:	DECISION ON SECOND RENEWED
Filed: February 24, 2011	:	PETITION PURSUANT TO
Attorney Docket No.: 9255 USA-	:	37 C.F.R. § 1.47(A)
NONP-DIV/CIP	:	
Title: INTERPOLYMER RESIN	:	
PARTICLES	:	

This is in response to the second renewed petition pursuant to 37 C.F.R. § 1.47(a), filed on August 3, 2011.

This second renewed petition is **DISMISSED.**

CLARIFICATION OF THE RECORD

An original petition pursuant to 37 C.F.R. 1.47(a) was filed on May 12, 2011 and was dismissed via the mailing of a decision on June 17, 2011.

A renewed petition pursuant to 37 C.F.R. § 1.47(a) was filed on July 20, 2011, and was dismissed via the mailing of a decision on July 29, 2011, which indicated that the renewed petition was illegible.

This second renewed petition contains an assertion made by counsel, as relayed to him through his support staff, which is not well taken. Counsel has asserted this his assistant spoke with the undersigned, and during that conversation, the undersigned "admitted that those documents of July 20, 2011 are legible and acceptable." This assertion is both inaccurate and incomplete. The relevant facts are as follows:

- The renewed petition of July 20, 2011 was filed electronically via EFS-Web.
- The undersigned viewed the aforementioned submission of July 20, 2011, and the contents were illegible. The text appeared black and the background dark gray, resulting in an

insufficient level of contrast between the text and the background. As such, the petition was properly dismissed via the mailing of a decision on July 29, 2011.

- On August 2, 2011, Karen Lockhart (Counsel's assistant) telephoned the undersigned at 2:23 PM. Ms. Lockhart indicated that she was unclear as to why it had been indicated that the papers were illegible, and that she was able to view them in PAIR. The undersigned viewed the electronic documents, and at that time they appeared legible. The undersigned expressed to Ms. Lockhart that he was unsure as to why the formerly illegible papers had become legible, that the papers were illegible when previously viewed by the undersigned, and that a second renewed petition would need to be filed.
- On August 3, 2011, Ms. Lockhart telephoned the undersigned at 10:20 AM, and indicated that she had filed the second renewed petition via EFS-Web. The undersigned viewed the second renewed petition in the Image File Wrapper, and indicated to her that the submission of August 3, 2011 was illegible due to the fact that the papers appeared grey. The undersigned further indicated to Ms. Lockhart that he would view the electronic file the following day, in the hopes that the papers would become legible by that time, as had occurred with the July 20, 2011 submission. The undersigned suggested that Ms. Lockhart contact the Electronic Business Center (EBC), so as to attempt to determine the reason that these submissions are not legible upon filing.
- On August 4, 2011, the undersigned viewed the August 3, 2011 submission and noted that the papers appeared legible.
- On August 5, 2011, the undersigned contacted the EBC, and inquired as to the reason that these submissions were not legible on filing, but became legible at a later date.
- On August 11, 2011, the EBC communicated to the undersigned that Petitioner's submissions were not legible on filing due to Petitioner's filing errors, and that they had later become legible after the EBC took steps to resolve the contrast problems with Petitioner's submissions. The EBC indicated that the tool which Petitioner utilized to create the PDF documents causes the documents to appear grey. The EBC further indicated that all EFS-Web submissions go through a quality control process, and this is the reason why the illegible documents later became legible: the illegible submissions of July 20, 2011 and August 3, 2011 were rescanned and made legible in the Image File Wrapper by USPTO support staff.

ANALYSIS OF THE SECOND RENEWED PETITION PURSUANT TO 37 C.F.R.§ 1.47(A)

A grantable petition pursuant to 37 C.F.R. § 1.47(a) requires:

(1) the petition fee of $200;
(2) a surcharge of either $65 or $130 if the petition is not filed at the time of filing the application, as set forth in 37 C.F.R. § 1.16(f);
(3) a statement of the last known address of the non-signing inventor;
(4) either
  a) proof that a copy of the entire application (specification, claims, drawings, and the oath or declaration) was sent or given to the non-signing inventor for review and proof that the non-signing inventor refuses to join in the application or
  b) proof that the non-signing inventor cannot be found or reached after diligent effort, and;
(5) a declaration which complies with 37 C.F.R. § 1.63.

The decision on the original petition pursuant to 37 C.F.R. § 1.47(a) indicated that requirements (1) - (3) and (5) of 37 C.F.R. § 1.47(a) have been satisfied, and that the original petition contained conflicting statements as to whether a complete copy of the application was sent to the last-known address of the non-signing inventor.[1]

With the submission of July 20, 2011, Petitioner has established that a complete copy of the application was sent to the last known address of the non-signing inventor,[2] and that the documents were returned to Petitioner on February 10, 2011 as being undeliverable. Petitioner further indicates that on or about February 16, 2011, the non-signing inventor provided an alternate address to Ms. Lockhart via e-mail, and indicated this address to be the address where the mailing should be sent. Petitioner has not revealed this alternate address. Ms. Lockhart sent "the documents" to that address on an unspecified date, and they were returned to Petitioner as "undeliverable" on an

1 Decision on original petition, page 2.
2 Renewed petition, page 2, paragraph 7 and Matz declaration of facts submitted concurrently therewith, paragraph 3.

unspecified date.[3]

At the present time, it cannot be determined whether Requirements (4) and (5) have been satisfied.

Regarding the fourth requirement of Rule 1.47(a), on third renewed petition, Petitioner should explicitly state whether the aforementioned "documents" that were mailed to the alternate address provided by the non-singing inventor contained a complete copy of Application No. 13/033,870.

Regarding the fifth requirement of 37 C.F.R. § 1.47(a), it cannot be determined whether the declaration that was submitted on May 12, 2011 can be accepted. Petitioner has indicated that the non-signing inventor provided an alternate address to Ms. Lockhart. Is this address the current residential address of the non-signing inventor? If so, Petitioner will need to either submit a new declaration or a properly titled and executed Supplemental Application Data Sheet (ADS) which contains this address.

On third renewed petition, Petitioner will need to provide the appropriate clarifications and possibly submit either a new declaration or a Supplemental ADS.

Any response to this decision must be submitted within **TWO MONTHS** from the mail date of this decision. Extensions of time under 37 C.F.R. § 1.136(a) are permitted. The reply should include a cover letter entitled "Third Renewed Petition pursuant to 37 C.F.R. § 1.47(a)". This is not a final agency action within the meaning of 5 U.S.C § 704.

Any response to this decision should indicate in a prominent manner that the attorney handling this matter is Paul Shanoski, and may be submitted by mail,[4] hand-delivery,[5] or facsimile.[6] Registered users of EFS-Web may alternatively submit a response to this decision via EFS-Web.[7]

If responding by mail, Petitioner is advised not to place the undersigned's name on the envelope. Only the information that appears in the footnote should be included - adding anything else to the address will delay the delivery of the response to the undersigned.

---

3 Renewed petition, page 2, paragraph 7 and Matz declaration of facts submitted concurrently therewith, paragraphs 3 and 5.
4 Mail Stop Petition, Commissioner for Patents, United States Patent and Trademark Office, P.O. Box 1450, Alexandria, VA, 22313-1450.
5 Customer Window, Randolph Building, 401 Dulaney Street, Alexandria, VA, 22314.
6 (571) 273-8300: please note this is a central facsimile number.
7 https://sportal.uspto.gov/authenticate/authenticateuserlocalepf.html

Telephone inquiries regarding this decision should be directed to the undersigned at (571) 272-3225.[8]

/Paul Shanoski/
Paul Shanoski
Senior Attorney
Office of Petitions

8 Petitioner will note that all practice before the Office should be in writing, and the action of the Office will be based exclusively on the written record in the Office. See 37 C.F.R. § 1.2. As such, Petitioner is reminded that no telephone discussion may be controlling or considered authority for any of Petitioner's further action(s).

UNITED STATES PATENT AND TRADEMARK OFFICE

COMMISSIONER FOR PATENTS
UNITED STATES PATENT AND TRADEMARK OFFICE
P.O. BOX 1450
ALEXANDRIA, VA 22313-1450
WWW.USPTO.GOV

Paper No.

NOVA Chemicals Inc./Karen S. Lockhart
1555 Coraopolis Heights Road
Moon Township PA 15108

MAILED
AUG 26 2011
OFFICE OF PETITIONS

In re Application of :
Krupinski and Vignola :
Application No. 13/033,870 :
Filed: February 24, 2011 :
Attorney Docket No.: 9255 USA-NONP-DIV/CIP :
Title: INTERPOLYMER RESIN PARTICLES :

DECISION ON THIRD RENEWED PETITION PURSUANT TO 37 C.F.R. § 1.47(A)

This is in response to the third renewed petition pursuant to 37 C.F.R. § 1.47(a), filed on August 17, 2011.

This third renewed petition is **DISMISSED.**

A grantable petition pursuant to 37 C.F.R. § 1.47(a) requires:

(1) the petition fee of $200;
(2) a surcharge of either $65 or $130 if the petition is not filed at the time of filing the application, as set forth in 37 C.F.R. § 1.16(f);
(3) a statement of the last known address of the non-signing inventor;
(4) either
  a) proof that a copy of the entire application (specification, claims, drawings, and the oath or declaration) was sent or given to the non-signing inventor for review and proof that the non-signing inventor refuses to join in the application or
  b) proof that the non-signing inventor cannot be found or reached after diligent effort, and;
(5) a declaration which complies with 37 C.F.R. § 1.63.

An original petition pursuant to 37 C.F.R. § 1.47(a) was filed on May 12, 2011, and was dismissed via the mailing of a decision on

June 17, 2011, which indicated that requirements (1) - (3) and (5) of 37 C.F.R. § 1.47(a) have been satisfied, and that the original petition contained conflicting statements as to whether a complete copy of the application was sent to the last-known address of the non-signing inventor.[1]

A renewed petition pursuant to 37 C.F.R. § 1.47(a) was filed on July 20, 2011, which was dismissed via the mailing of a decision on July 29, 2011.

A second renewed petition pursuant to 37 C.F.R. § 1.47(a) was filed on August 3, 2011, which was dismissed via the mailing of a decision on August 15, 2011, which indicated that it could not be determined whether the fifth requirement of Rule 1.47(a) had been satisfied.

With the submission of July 20, 2011, Petitioner established that a complete copy of the application was sent to the last known address of the non-signing inventor,[2] and that the documents were returned to Petitioner on February 10, 2011 as being undeliverable.

With this third renewed petition, Petitioner has indicated that the non-signing inventor's address which appears on the declaration is the current residential address for the non-signing inventor. It follows that the fifth requirement of Rule 1.47(a) has been satisfied.

The fourth requirement of Rule 1.47(a) remains unsatisfied, as will now be pointed out.

Petitioner has further indicated on third renewed petition that on February 16, 2011, he "communicated with Mr. Krupinski via e-mail," and "Mr. Krupinski asked that full copies of the original issued patent (which had not yet issued) and the new Continuation-In-Part patent application would (sic) be sent to his girlfriend's home address (230 Oneida Street, Pittsburgh, PA 15211) as he was out of town caring for a sick relative and would retrieve the documents when he returned."[3]

As such, the non-signing inventor clearly requested, in writing, that a copy of this application be sent to a physical address, and he provided that address to Petitioner. However, instead of complying with this request, Petitioner effectuated the sending

---

1 Decision on original petition, page 2.
2 Renewed petition, page 2, paragraph 7 and Matz declaration of facts submitted concurrently therewith, paragraph 3.
3 Matz statement of facts submitted with third renewed petition, page 2, paragraph 3. See also contemporaneously submitted print-out of an e-mail from the non-signing inventor, dated February 16, 2011 with a timestamp of 3:36 PM.

of an e-mail to the non-signing inventor, with a copy of the application included as an attachment thereto.[4] The record strongly suggests that a paper copy of this application was not sent to the physical address as requested and provided by the non-signing inventor.

The transmission of documents via e-mail, while a common practice, can be problematic. Transmission and receipt of documents-whether in image, word-processing, spreadsheet or other form-can be affected by differences in software generation between the sender and recipient(s), and other interferences include but are not limited to sender's and recipient's Internet service provider's (ISP) and/or office/personal security firewall systems. Thus, in the absence of an express statement from the non-signing inventor that he has received, opened and read the document, unlike a printed page in the language of the recipient there is as of this writing no basis to presume that the e-mailed document was in a form that can be read and comprehended.

Prior to filing the fourth renewed petition, Petitioner should mail a complete copy of the application to the address provided by the non-signing inventor (230 Oneida Street, Pittsburgh, PA 15211) and provide him with a reasonable period of time to respond. Petitioner should note that any statement that pertains to the presentation should be made by one having firsthand knowledge of the event. Statements based on hearsay are not normally accepted.

The response to this decision must be submitted within **TWO MONTHS** from the mail date of this decision. Extensions of time under 37 C.F.R. § 1.136(a) are permitted. The reply should include a cover letter entitled "Fourth Renewed Petition pursuant to 37 C.F.R. § 1.47(a)". This is not a final agency action within the meaning of 5 U.S.C § 704.

Any response to this decision should indicate in a prominent manner that the attorney handling this matter is Paul Shanoski, and may be submitted by mail,[5] hand-delivery,[6] or facsimile.[7] Registered users of EFS-Web may alternatively submit a response to this decision via EFS-Web.[8]

If responding by mail, Petitioner is advised not to place the undersigned's name on the envelope. Only the information that

---

4 Matz statement of facts submitted with third renewed petition, page 2, paragraph 4. See also contemporaneously submitted print-out of an e-mail from Ms. Lockhart, dated February 16, 2011 with a timestamp of 4:04 PM.
5 Mail Stop Petition, Commissioner for Patents, United States Patent and Trademark Office, P.O. Box 1450, Alexandria, VA, 22313-1450.
6 Customer Window, Randolph Building, 401 Dulaney Street, Alexandria, VA, 22314.
7 (571) 273-8300: please note this is a central facsimile number.
8 https://sportal.uspto.gov/authenticate/authenticateuserlocalepf.html

appears in the footnote should be included - adding anything else to the address will delay the delivery of the response to the undersigned.

Telephone inquiries regarding this decision should be directed to the undersigned at (571) 272-3225.[9]

/Paul Shanoski/
Paul Shanoski
Senior Attorney
Office of Petitions

9 Petitioner will note that all practice before the Office should be in writing, and the action of the Office will be based exclusively on the written record in the Office. See 37 C.F.R. § 1.2. As such, Petitioner is reminded that no telephone discussion may be controlling or considered authority for any of Petitioner's further action(s).

UNITED STATES PATENT AND TRADEMARK OFFICE

Commissioner for Patents
United States Patent and Trademark Office
P.O. Box 1450
Alexandria, VA 22313-1450
www.uspto.gov

MAILED Paper No.
OCT 03 2011
OFFICE OF PETITIONS

NOVA Chemicals Inc./Karen S. Lockhart
1555 Coraopolis Heights Road
Moon Township PA 15108

In re Application of	:	
Krupinski and Vignola	:	
Application No. 13/033,870	:	DECISION ON FOURTH RENEWED
Filed: February 24, 2011	:	PETITION PURSUANT TO
Attorney Docket No.: 9255 USA-	:	37 C.F.R. § 1.47(A)
NONP-DIV/CIP	:	
Title: INTERPOLYMER RESIN	:	
PARTICLES	:	

This is in response to the fourth renewed petition pursuant to 37 C.F.R. § 1.47(a), filed on September 28, 2011.

This fourth renewed petition is **GRANTED**.

A grantable petition pursuant to 37 C.F.R. § 1.47(a) requires:

(1) the petition fee of $200;
(2) a surcharge of either $65 or $130 if the petition is not filed at the time of filing the application, as set forth in 37 C.F.R. § 1.16(f);
(3) a statement of the last known address of the non-signing inventor;
(4) either
  a) proof that a copy of the entire application (specification, claims, drawings, and the oath or declaration) was sent or given to the non-signing inventor for review and proof that the non-signing inventor refuses to join in the application or
  b) proof that the non-signing inventor cannot be found or reached after diligent effort, and;
(5) a declaration which complies with 37 C.F.R. § 1.63.

An original petition pursuant to 37 C.F.R. § 1.47(a) was filed on

May 12, 2011, and was dismissed via the mailing of a decision on June 17, 2011, which indicated that requirements (1) - (3) and (5) of 37 C.F.R. § 1.47(a) have been satisfied, and that the original petition contained conflicting statements as to whether a complete copy of the application was sent to the last-known address of the non-signing inventor.[1]

A renewed petition pursuant to 37 C.F.R. § 1.47(a) was filed on July 20, 2011, which was dismissed via the mailing of a decision on July 29, 2011.

A second renewed petition pursuant to 37 C.F.R. § 1.47(a) was filed on August 3, 2011, which was dismissed via the mailing of a decision on August 15, 2011, which indicated that it could not be determined whether the fifth requirement of Rule 1.47(a) had been satisfied.

With the submission of July 20, 2011, Petitioner established that a complete copy of the application was sent to the last known address of the non-signing inventor,[2] and that the documents were returned to Petitioner on February 10, 2011 as being undeliverable.

A third renewed petition pursuant to 37 C.F.R. § 1.47(a) was filed on August 17, 2011 and was dismissed via the mailing of a decision on August 26, 2011 which indicated that the fifth requirement of Rule 1.47(a) had been satisfied.

With this fourth renewed petition, Petitioner has indicated that on August 30, 2011, "a copy of the Continuation-in part application" was sent to the address provided by Mr. Krupinski and that no response has been received.[3] The Office is construing this language to be an assertion that a complete copy of Application No. 13/033,870 was sent to the address provided by Mr. Krupinski on August 30, 2011.

It follows that the fourth requirement of Rule 1.47(a) has been satisfied.

Each of the five requirements of 37 C.F.R. § 1.47(a) has been satisfied. This application is hereby accorded Rule 1.47(a) status. As provided in Rule 1.47, this Office will forward notice of this application's filing to the non-signing inventor at the address given in the declaration that was submitted on May 12, 2011. Notice of the filing of this application will also be published in the Official Gazette.

---

1 Decision on original petition, page 2.
2 Renewed petition, page 2, paragraph 7 and Matz declaration of facts submitted concurrently therewith, paragraph 3.
3 Fourth renewed petition, page 3, paragraph 7.

The Office of Patent Application Processing (OPAP) will be notified of this decision, and jurisdiction over the application is transferred to OPAP, so that the application may receive further processing.

Petitioner will receive appropriate notifications regarding the fees owed, if any, and other information in due course from OPAP.

The general phone number for OPAP is 571-272-4000. Telephone inquiries **regarding this decision** should be directed to the undersigned at (571) 272-3225.[4]

Paul Shanoski
Senior Attorney
Office of Petitions

4 Petitioner will note that all practice before the Office should be in writing, and the action of the Office will be based exclusively on the written record in the Office. See 37 C.F.R. § 1.2. As such, Petitioner is reminded that no telephone discussion may be controlling or considered authority for any further action(s) of Petitioner.

UNITED STATES PATENT AND TRADEMARK OFFICE

Commissioner for Patents
United States Patent and Trademark Office
P.O. Box 1450
Alexandria, VA 22313-1450
www.uspto.gov

Steven M. Krupinski
922 Chestnut Ridge Drive
Pittsburgh, PA 15205

MAILED
OCT 03 2011
OFFICE OF PETITIONS

In re Application of	:	
Krupinski and Vignola	:	
Application No. 13/033,870	:	
Filed: February 24, 2011	:	LETTER
Attorney Docket No.: 9255	:	
USA-NONP-DIV/CIP	:	
Title: INTERPOLYMER RESIN	:	
PARTICLES	:	

Dear Mr. Krupinski:

You are named a joint inventor in the above-identified United States patent application filed under the provisions of 35 U.S.C. § 116 (United States Code) and 37 C.F.R. § 1.47(a), Rules of Practice in Patent Cases. Should a patent be granted on the application, you will be designated therein as a joint inventor.

As a named inventor you are entitled to inspect any paper in the file wrapper of the application, order copies of all or any part thereof (at a prepaid cost per 37 C.F.R. § 1.19) or make your position of record in the application. Alternatively, you may arrange to do any of the preceding through a registered patent attorney or agent presenting written authorization from you. If you care to join the application, the attorney of record below would presumably assist you. Joining in the application would entail the filing of an appropriate oath or declaration by you pursuant to 37 C.F.R. § 1.63.

Telephone inquiries regarding this communication should be directed to Senior Attorney Paul Shanoski at (571) 272-3225. Requests for information regarding your application should be directed to the File Information Unit at (703) 308-2733. Information regarding how to pay for and order a copy of the application, or a specific paper in the application, should be directed to the Certification Division at (571) 272-3150, or 1-800-972-6382 outside the Washington D.C. area.

Paul Shanoski
Senior Attorney
Office of Petitions

cc: NOVA Chemicals Inc./Karen S. Lockhart
1555 Coraopolis Heights Road
Moon Township PA 15108

UNITED STATES PATENT AND TRADEMARK OFFICE

Commissioner for Patents
United States Patent and Trademark Office
P.O. Box 1450

MAILED
FEB 02 2012
OFFICE OF PETITIONS

LOWE HAUPTMAN HAM & BERNER, LLP
1700 DIAGONAL ROAD
SUITE 300
ALEXANDRIA VA 22314

In re Application of	: DECISION ON REQUEST TO
Hideaki MAEDA et al.	: PARTICIPATE IN PPH PROGRAM
Application No. 13/033,874	: AND PETITION TO MAKE SPECIAL
Filed: February 24, 2011	: UNDER 37 CFR 1.102(a)
Atty. Docket No.: 4952-061	:

For: AUTOMATIC PROGRAMMING METHOD AND DEVICE FOR CREATING MULTI-PATH PROGRAM

This is a decision on the request to participate in the Patent Prosecution Highway (PPH) program and the petition under 37 CFR 1.102(a), filed October 19, 2011 to make the above-identified application special.

The petition is **DISMISSED**.

A grantable request to participate in the PPH (patent prosecution highway) program and petition to make special require:

(1) the U.S. application is a Paris Convention application which either validly claims priority under 35 U.S.C. 119(a) and 37 CFR 1.55 to one or more applications filed in the JPO (Japanese Patent Office) or claims priority to a PCT application that contains no priority claims. Alternatively, it can be a national stage application under the PCT which validly claims priority to an application filed in the JPO or claims priority to a PCT application that contains no priority claims. It can also be a "bypass application" filed under 35 U.S.C. 111(a) which validly claims benefit under 35 U.S.C. 120 to a PCT application, which PCT application validly claims priority to an application filed in the JPO or claims priority to a PCT application that contains no priority claims, or contains no priority claim;

(2) applicant must submit a copy of the allowable/patentable claim(s) from the JPO application(s) along with an English translation thereof and a statement that the English translation is accurate;

(3) all the claims in the U.S. application must sufficiently correspond or be amended to sufficiently correspond to the allowable/patentable claim(s) in the JPO application(s);

(4) examination of the U.S. application has not begun;

(5) applicant must submit a copy of all the office actions from each of the JPO application(s) containing the allowability/patentable claim(s) along with an English translation thereof and a statement that the English translation is accurate; and

(6) applicant must submit an IDS listing the documents cited by the JPO examiner in the JPO office action along with copies of documents except U.S. patents or U.S. patent application publications.

Requirements (1), (4), and (6) above are considered to have been met. However, the request to participate in the PPH program and petition fail to meet requirements (2), (3), and (5).

Regarding the requirement of condition (2), applicant has failed to submit a copy of the allowable/patentable claims from the JPO application. Whereas applicant has provided claims from the JPO application, as well as a copy of the JPO office action, there is no indication from the JPO that any one claim in the JPO application is allowable.

Regarding the requirement of claim (3), it cannot be determined if requirement (3) has been met since the Office action from the JPO does not indicate that there are any allowable claims in the JPO application.

Regarding the requirement of claim (5), it cannot be determined if requirement (5) has been met since the office action from the JPO does not indicate that there are any allowable claims.

Applicant is given **ONE** opportunity with a time period of **ONE MONTH** or **THIRTY DAYS**, whichever is longer, from the mailing date of this decision to correct the deficiencies. **NO EXTENSION OF TIME UNDER 37 CFR 1.136 IS PERMITTED**. If the deficiencies are not corrected within the time period given, the application will await action in its regular turn.

Response must be filed via the Electronic Filing System (EFS) using the document description: Petition to make special under Patent Pros. Hwy. Any preliminary amendments and IDS submitted with the PPH documents must be separately indexed as a preliminary amendment and IDS, respectively.

Telephone inquiries concerning this decision should be directed to Robert DeWitty, Petition Attorney, Office of Petitions at 571-272-8427.

All other inquiries concerning the examination or status of the application is accessible in the PAIR system at http://www.uspto.gov/ebc/index.html.

David Bucci
Petitions Examiner
Office of Petitions

UNITED STATES PATENT AND TRADEMARK OFFICE

Commissioner for Patents
United States Patent and Trademark Office
P.O. Box 1450

MAILED

MAR 09 2012

OFFICE OF PETITIONS

LOWE HAUPTMAN HAM & BERNER, LLP
1700 DIAGONAL ROAD
SUITE 300
ALEXANDRIA VA 22314

In re Application of : DECISION ON REQUEST TO
Hideaki MAEDA et al. : PARTICIPATE IN PPH PROGRAM
Application No. 13/033,874 : AND PETITION TO MAKE SPECIAL
Filed: February 24, 2011 : UNDER 37 CFR 1.102(a)
Atty. Docket No.: 4952-061 :
For: AUTOMATIC PROGRAMMING METHOD AND DEVICE FOR CREATING MULTI-PATH PROGRAM

This is a decision on the renewed request to participate in the Patent Prosecution Highway (PPH) program and the petition under 37 CFR 1.102(a), filed February 22, 2012 to make the above-identified application special.

The petition and request are **GRANTED**.

A grantable request to participate in the PPH (patent prosecution highway) program and petition to make special require:

(1) the U.S. application is a Paris Convention application which either validly claims priority under 35 U.S.C. 119(a) and 37 CFR 1.55 to one or more applications filed in the JPO (Japanese Patent Office) or claims priority to a PCT application that contains no priority claims. Alternatively, it can be a national stage application under the PCT which validly claims priority to an application filed in the JPO or claims priority to a PCT application that contains no priority claims. It can also be a "bypass application" filed under 35 U.S.C. 111(a) which validly claims benefit under 35 U.S.C. 120 to a PCT application, which PCT application validly claims priority to an application filed in the JPO or claims priority to a PCT application that contains no priority claims, or contains no priority claim;

(2) applicant must submit a copy of the allowable/patentable claim(s) from the JPO application(s) along with an English translation thereof and a statement that the English translation is accurate;

(3) all the claims in the U.S. application must sufficiently correspond or be amended to sufficiently correspond to the allowable/patentable claim(s) in the JPO application(s);

(4) examination of the U.S. application has not begun;

(5) applicant must submit a copy of all the office actions from each of the JPO application(s) containing the allowability/patentable claim(s) along with an English translation thereof and a statement that the English translation is accurate; and

(6) applicant must submit an IDS listing the documents cited by the JPO examiner in the JPO office action along with copies of documents except U.S. patents or U.S. patent application publications.

The request to participate in the PPH program and petition comply with the above requirements. Accordingly, the above-identified application has been accorded "special" status.

Telephone inquiries concerning this decision should be directed to Robert DeWitty, Petition Attorney, Office of Petitions at 571-272-8427.

All other inquiries concerning the examination or status of the application is accessible in the PAIR system at http://www.uspto.gov/ebc/index.html.

David Bucci
Petitions Examiner
Office of Petitions

Doc Code: PET.GREEN
Document Description: Petition for Green Tech Pilot

PTO/SB/420 (11-10)
Approved for use through 01/31/2011. OMB 0651-0062
U.S. Patent and Trademark Office; U. S. DEPARTMENT OF COMMERCE
Under the Paperwork Reduction Act of 1995, no persons are required to respond to a collection of information unless it displays a valid OMB control number.

PETITION TO MAKE SPECIAL UNDER THE GREEN TECHNOLOGY PILOT PROGRAM

Attorney Docket Number: 51017-95308	Application Number (if known): 13033883	Filing date: 2011-02-24
First Named Inventor: Ryan Sven Johnson		
Title: Method and System for Reducing Carbon Emissions Arising from Vehicle Travel		

APPLICANT HEREBY REQUESTS TO PARTICIPATE IN THE GREEN TECHNOLOGY PILOT PROGRAM FOR THE ABOVE-IDENTIFIED APPLICATION. See Instruction Sheet on page 2.

This petition must be timely filed electronically using the USPTO electronic filing system, EFS-Web.

1. By filing this petition:

   Applicant is requesting early publication: Applicant hereby requests early publication under 37 CFR 1.219 and the publication fee set forth in 37 CFR 1.18(d) accompanies this request.

2. By filing this petition: applicant is agreeing to make an election without traverse in a telephonic interview and elect an invention that meets the eligibility requirements for the Green Technology Pilot Program, if the Office determines that the claims are not obviously directed to a single invention. See Instruction Sheet.

3. This request is accompanied by statements of special status for the eligibility requirement.

4. The application contains no more than three (3) independent claims and twenty (20) total claims.

5. The application does not contain any multiple dependent claims.

6. Other attachments: Letter in Support of Petition to Make Special

Signature /Benjamin L. Volk, Jr./	Date 2011-02-24
Name (Print/Typed) Benjamin L. Volk, Jr.	Registration Number 48017

Note: *Signatures of all the inventors or assignees of record of the entire interest or their representative(s) are required in accordance with 37 CFR 1.33 and 11.18. Please see 37 CFR 1.4(d) for the form of the signature. If necessary, submit multiple forms for more than one signature see below*.*

☒ *Total of 2 forms are submitted.

The information is required to obtain or retain a benefit by the public which is to file (and by the USPTO to process) an application. Confidentiality is governed by 35 U.S.C. 122 and 37 CFR 1.11 and 1.14. This collection is estimated to take 12 hours to complete, including gathering, preparing, and submitting the completed application form to the USPTO. Time will vary depending upon the individual case. Any comments on the amount of time you require to complete this form and/or suggestions for reducing this burden, should be sent to the Chief Information Officer, U.S. Patent and Trademark Office, U.S. Department of Commerce, P.O. Box 1450, Alexandria, VA 22313-1450. DO NOT SEND FEES OR COMPLETED FORMS TO THIS ADDRESS. **SEND TO: Commissioner for Patents, P.O. Box 1450, Alexandria, VA 22313-1450.**

If you need assistance in completing the form, call 1-800-PTO-9199 and select option 2.

Under the Paperwork Reduction Act of 1995, no persons are required to respond to a collection of information unless it displays a valid OMB control number.

Instruction Sheet for Petition to Make Special Under the Green Technology Pilot Program

(Not to be Submitted to the USPTO)

The following is a summary of the requirements (for more information see the notices (i) "Pilot Program for Green Technologies Including Greenhouse Gas Reduction," (ii) "Elimination of Classification Requirement in the Green Technology Pilot Program," and (iii) "Expansion and Extension of the Green Technology Pilot Program," available on the USPTO web site at http://www.uspto.gov/patents/init_events/green_tech.jsp):

1) The application must be a non-reissue, non-provisional utility application filed under 35 U.S.C. 111 (a), or an international application that has entered the national stage in compliance with 35 U.S.C. 371, irrespective of the filing date of the application. Reexamination proceedings are excluded from this pilot program.

2) The application must contain three or fewer independent claims and twenty or fewer total claims. The application must not contain any multiple dependent claims. For an application that contains more than three independent claims or twenty total claims, or multiple dependent claims, applicant must file a preliminary amendment in compliance with 37 CFR 1.121 to cancel the excess claims and/or the multiple dependent claims at the time the petition to make special is filed.

3) The claims must be directed to a single invention that materially enhances the quality of the environment, or that materially contributes to: (1) the discovery or development of renewable energy resources; (2) the more efficient utilization and conservation of energy resources; or (3) green house gas emission reduction (see the eligibility requirements of sections II and III of the notice (i) cited above). The petition must include a statement that, if the USPTO determines that the claims are directed to multiple inventions (e.g., in a restriction requirement), applicant will agree to make an election without traverse in a telephonic interview, and elect an invention that meets the eligibility requirements in section II or III of the notice (i) cited above.

4) The petition to make special must be timely filed electronically using the USPTO electronic filing system, EFS-Web, and selecting the document description of "Petition for Green Tech Pilot" on the EFS-Web screen. Applicant should use form PTO/SB/420, which is available as a Portable Document Format (PDF) fillable form in EFS-Web and on the USPTO Web site.

5) The petition to make special must be filed at least one day prior to the date that a first Office action (which may be an Office action containing only a restriction requirement) appears in the Patent Application Information Retrieval (PAIR) system. Applicant may check the status of the application using PAIR.

6) The petition to make special must be accompanied by a request for early publication in compliance with 37 CFR 1.219 and the publication fee set forth in 37 CFR 1.18(d).

Privacy Act Statement

The **Privacy Act of 1974 (P.L. 93-579)** requires that you be given certain information in connection with your submission of the attached form related to a patent application or patent. Accordingly, pursuant to the requirements of the Act, please be advised that: (1) the general authority for the collection of this information is 35 U.S.C. 2(b)(2); (2) furnishing of the information solicited is voluntary; and (3) the principal purpose for which the information is used by the U.S. Patent and Trademark Office is to process and/or examine your submission related to a patent application or patent. If you do not furnish the requested information, the U.S. Patent and Trademark Office may not be able to process and/or examine your submission, which may result in termination of proceedings or abandonment of the application or expiration of the patent.

The information provided by you in this form will be subject to the following routine uses:

1. The information on this form will be treated confidentially to the extent allowed under the Freedom of Information Act (5 U.S.C. 552) and the Privacy Act (5 U.S.C 552a). Records from this system of records may be disclosed to the Department of Justice to determine whether disclosure of these records is required by the Freedom of Information Act.
2. A record from this system of records may be disclosed, as a routine use, in the course of presenting evidence to a court, magistrate, or administrative tribunal, including disclosures to opposing counsel in the course of settlement negotiations.
3. A record in this system of records may be disclosed, as a routine use, to a Member of Congress submitting a request involving an individual, to whom the record pertains, when the individual has requested assistance from the Member with respect to the subject matter of the record.
4. A record in this system of records may be disclosed, as a routine use, to a contractor of the Agency having need for the information in order to perform a contract. Recipients of information shall be required to comply with the requirements of the Privacy Act of 1974, as amended, pursuant to 5 U.S.C. 552a(m).
5. A record related to an International Application filed under the Patent Cooperation Treaty in this system of records may be disclosed, as a routine use, to the International Bureau of the World Intellectual Property Organization, pursuant to the Patent Cooperation Treaty.
6. A record in this system of records may be disclosed, as a routine use, to another federal agency for purposes of National Security review (35 U.S.C. 181) and for review pursuant to the Atomic Energy Act (42 U.S.C. 218(c)).
7. A record from this system of records may be disclosed, as a routine use, to the Administrator, General Services, or his/her designee, during an inspection of records conducted by GSA as part of that agency's responsibility to recommend improvements in records management practices and programs, under authority of 44 U.S.C. 2904 and 2906. Such disclosure shall be made in accordance with the GSA regulations governing inspection of records for this purpose, and any other relevant (*i.e.*, GSA or Commerce) directive. Such disclosure shall not be used to make determinations about individuals.
8. A record from this system of records may be disclosed, as a routine use, to the public after either publication of the application pursuant to 35 U.S.C. 122(b) or issuance of a patent pursuant to 35 U.S.C. 151. Further, a record may be disclosed, subject to the limitations of 37 CFR 1.14, as a routine use, to the public if the record was filed in an application which became abandoned or in which the proceedings were terminated and which application is referenced by either a published application, an application open to public inspection or an issued patent.
9. A record from this system of records may be disclosed, as a routine use, to a Federal, State, or local law enforcement agency, if the USPTO becomes aware of a violation or potential violation of law or regulation.

UNITED STATES PATENT AND TRADEMARK OFFICE

UNITED STATES DEPARTMENT OF COMMERCE
United States Patent and Trademark Office
Address: COMMISSIONER FOR PATENTS
P.O. Box 1450
Alexandria, Virginia 22313-1450
www.uspto.gov

APPLICATION NO.	FILING DATE	FIRST NAMED INVENTOR	ATTORNEY DOCKET NO.	CONFIRMATION NO.
13/033,883	02/24/2011	Ryan Sven Johnson	51017-95308	9740

21888 7590 06/02/2011
THOMPSON COBURN LLP
ONE US BANK PLAZA
SUITE 3500
ST LOUIS, MO 63101

EXAMINER

ART UNIT	PAPER NUMBER
3628	

NOTIFICATION DATE	DELIVERY MODE
06/02/2011	ELECTRONIC

Please find below and/or attached an Office communication concerning this application or proceeding.

The time period for reply, if any, is set in the attached communication.

Notice of the Office communication was sent electronically on above-indicated "Notification Date" to the following e-mail address(es):

IPDOCKET@THOMPSONCOBURN.COM

UNITED STATES PATENT AND TRADEMARK OFFICE

Commissioner for Patents
United States Patent and Trademark Office
P.O. Box 1450
Alexandria, VA 22313-1450
www.uspto.gov

JUN 0 1 2011

THOMPSON COBURN LLP
ONE US BANK PLAZA
SUITE 3500
ST LOUIS MO 63101

In re Application of	:	
Ryan JOHNSON	:	DECISION ON PETITION
Application No. 13/033,883	:	TO MAKE SPECIAL UNDER
Filed: February 24, 2011	:	THE GREEN TECHNOLOGY
Attorney Docket No. 51017-95308	:	PILOT PROGRAM

This is a decision on the petition under 37 CFR 1.102, filed February 24, 2011 to make the above-identified application special under the pilot program for applications pertaining to Green Technologies as set forth in 74 Federal Register Notice 64666 (December 8, 2009) and amended by 75 Federal Register Notice 28554 (May 21, 2010) and 75 Federal Register Notice 69049 (November 10, 2010).

The petition is **DISMISSED**.

If reconsideration of this decision is desired, a petition for reconsideration must be filed within ONE (1) MONTH OR THIRTY (30) DAYS from the mail date of this decision, whichever is longer. No extension of this time limit can be granted under 37 CFR 1.136(a) or (b). The petition for reconsideration should include an exhaustive attempt to provide the lacking item(s) noted below, since, after a decision on the petition for reconsideration, no further reconsideration or review of the matter will be undertaken by the Director.

A grantable petition to make an application special under 37 CFR 1.102 and the pilot program as set forth in 74 FR 64666 must be directed to a nonprovisional application filed under 35 USC 111(a) or be a national stage entry under 35 USC 371, exclusive of any reissue applications.

In order to qualify for special status, the following requirements must be met. 1) The application must have no more than 3 independent claims and no more than 20 total claims. 2) The application must not contain any multiple dependent claims. 3) The petition must state the basis for seeking special status, i.e., the claimed invention either: A) materially enhances the quality of the environment or B) materially contributes to: i) the discovery or development of renewable energy resources, ii) the more efficient utilization and conservation of energy resources, or iii) greenhouse gas emission reduction. 4) If the disclosure is not clear on its face that the claimed invention materially contributes under category (A) or (B), the petition must be accompanied by a statement by the applicant, assignee, or an attorney/agent registered to practice before the

Office explaining how the materiality standard is met. 5) A statement that applicant will agree to make an election without traverse in a telephonic interview if a restriction requirement is made by the examiner. 6) The petition to make special must be filed electronically. 7) The petition must be filed at least one day prior to the date that a first Office Action appears in the Patent Application Information Retrieval (PAIR) system. 8) The petition must be accompanied by a request for early publication in compliance with 37 CFR 1.219 and include the publication fee as set forth in 37 CFR 1.18(d).

The requirement for a fee for consideration of the petition to make special for applications pertaining to Green Technologies has been waived.

The petition lacks item 4.

In regard to item 4, the claimed system for reducing carbon emission arising from vehicle travel and its method thereof would not materially contribute to greenhouse gas reduction since each vehicle travel mode emits greenhouse gas, and the "lowest monetary cost" rule would not necessarily result in a vehicle travel mode selection with the lowest carbon emissions. The distance for a trip and an emissions rating for the vehicle are not accurate factors for determining the carbon emissions of a vehicle. The distance of a trip does not take into account traffic patterns, road condition, the type of road (interstate highways versus local roads), the weather and other elements that affect the carbon emissions of a vehicle. The emissions rating for a vehicle does not take into account the condition of a vehicle, the load placed on the vehicle, or the driving style of the driver, which also affects the carbon emission of a vehicle. A low estimate for one vehicle travel mode using the travel management software may be much higher in reality compared to other vehicle travel modes when other factors mentioned above are taken into consideration. As stated in the notice, the materiality standard does not permit an applicant to speculate as to how a hypothetical end-user might specially apply the invention in a manner than could materially contribute to category (A) or (B). *Also see MPEP § 708.02 (VI).* Accordingly, it is not agreed that the application on its face meets that materiality standard.

Any reconsideration of this decision should be submitted through the USPTO electronic filing system, EFS-Web, and selecting the document description of "Petition for Green Tech Pilot" on the EFS-Web screen.

Telephone inquiries concerning this decision should be directed to Lanna Mai at 571-272-6867.

The application is being forwarded to the Technology Center Art Unit 3628 for action in its regular turn.

/Lanna Mai/

Lanna Mai
Quality Assurance Specialist
Technology Center 3600

Doc Code: PET.GREEN
Document Description: Petition for Green Tech Pilot

PTO/SB/420 (03-11)

PETITION TO MAKE SPECIAL UNDER THE GREEN TECHNOLOGY PILOT PROGRAM

Attorney Docket Number: HI-0612	Application Number (if known): 13/033,890	Filing date: February 24, 2011

First Named Inventor: Hwan Hee JEONG

Title: LIGHT EMITTING DEVICE, METHOD OF MANUFACTURING THE LIGHT EMITTING DEVICE, LIGHT EMITTING DEVICE PACKAGE, AND LIGHTING SYSTEM

APPLICANT HEREBY REQUESTS TO PARTICIPATE IN THE GREEN TECHNOLOGY PILOT PROGRAM FOR THE ABOVE-IDENTIFIED APPLICATION. See Instruction Sheet on page 2.

This petition must be timely filed electronically using the USPTO electronic filing system, EFS-Web.

1. By filing this petition:

   Applicant is requesting early publication: Applicant hereby requests early publication under 37 CFR 1.219 and the publication fee set forth in 37 CFR 1.18(d) accompanies this request.

2. By filing this petition: applicant is agreeing to make an election without traverse in a telephonic interview and elect an invention that meets the eligibility requirements for the Green Technology Pilot Program, if the Office determines that the claims are not obviously directed to a single invention. See Instruction Sheet.

3. This request is accompanied by statements of special status for the eligibility requirement.

4. The application contains no more than three (3) independent claims and twenty (20) total claims.

5. The application does not contain any multiple dependent claims.

6. Other attachments: _____

Signature	Date May 3, 2011
Name (Print/Typed) Daniel Y.J. Kim	Registration Number 36,168

Note: *Signatures of all the inventors or assignees of record of the entire interest or their representative(s) are required in accordance with 37 CFR 1.33 and 11.18. Please see 37 CFR 1.4(d) for the form of the signature. If necessary, submit multiple forms for more than one signature, see below*.*

*Total of 2 forms are submitted.

If you need assistance in completing the form, call 1-800-PTO-9199 and select option 2.

Docket No.: **HI-0612** PATENT

IN THE UNITED STATES PATENT AND TRADEMARK OFFICE

In re Application of:		Confirmation No.:	**9749**
Hwan Hee JEONG		Group Art Unit:	**2811**
Serial No.:	**13/033,890**	Examiner:	**To Be Assigned**
Filed:	**February 24, 2011**	Customer No.:	**34610**

For: **LIGHT EMITTING DEVICE, METHOD OF MANUFACTURING THE LIGHT EMITTING DEVICE, LIGHT EMITTING DEVICE PACKAGE, AND LIGHTING SYSTEM**

STATEMENT OF SPECIAL STATUS FOR ELIGIBILITY UNDER THE GREEN TECHNOLOGY PILOT PROGRAM

U.S. Patent and Trademark Office
Customer Service Window, **MAIL STOP PETITIONS**
Randolph Building
401 Dulany Street
Alexandria, Virginia 22314

Sir:

Special status is sought under 37 CFR §1.102 because the invention materially contributes to the more efficient utilization and conservation of energy resources.

Respectfully submitted,
KED & ASSOCIATES, LLP

Daniel Y.J. Kim
Registration No. 36,186

Correspondence Address:
P.O. Box 8638
Reston, VA 20195
703 766-3777 DYK/dak
Date: May 3, 2011
Please direct all correspondence to Customer Number 34610
Q:\Documents\2019-1171\278139

UNITED STATES PATENT AND TRADEMARK OFFICE

UNITED STATES DEPARTMENT OF COMMERCE
United States Patent and Trademark Office
Address: COMMISSIONER FOR PATENTS
P.O. Box 1450
Alexandria, Virginia 22313-1450
www.uspto.gov

APPLICATION NO.	FILING DATE	FIRST NAMED INVENTOR	ATTORNEY DOCKET NO.	CONFIRMATION NO.
13/033,890	02/24/2011	Hwan Hee JEONG	HI-0612	9749

34610 7590 05/11/2011
KED & ASSOCIATES, LLP
P.O. Box 8638
Reston, VA 20195

EXAMINER

ART UNIT	PAPER NUMBER
2811	

MAIL DATE	DELIVERY MODE
05/11/2011	PAPER

Please find below and/or attached an Office communication concerning this application or proceeding.

The time period for reply, if any, is set in the attached communication.

UNITED STATES PATENT AND TRADEMARK OFFICE

Commissioner for Patents
United States Patent and Trademark Office
P.O. Box 1450
Alexandria, VA 22313-1450
www.uspto.gov

KED & ASSOCIATES, LLP
P.O. Box 8638
Reston VA 20195

In re Application of	:	
Hwan Hee JEONG	:	DECISION ON PETITION
Application No. 13/033,890	:	TO MAKE SPECIAL UNDER
Filed: February 24, 2011	:	THE GREEN TECHNOLOGY
Attorney Docket No. HI-0612	:	PILOT PROGRAM

This is a decision on the petition under 37 CFR 1.102, filed on May 03, 2011, to make the above-identified application special under the pilot program for applications pertaining to Green Technologies as set forth 74 Federal Register Notice 64666 (December 8, 2009) and amended by 75 Federal Register Notice 28554 (May 21, 2010) and 75 Federal Register Notice 69049 (November 10, 2010).

The petition is **DISMISSED**.

If reconsideration of this decision is desired, a petition for reconsideration must be filed within ONE (1) MONTH OR THIRTY (30) DAYS from the mail date of this decision, whichever is longer. No extension of this time limit can be granted under 37 CFR 1.136(a) or (b). The petition for reconsideration should include an exhaustive attempt to provide the lacking item(s) noted below, since, after a decision on the petition for reconsideration, no further reconsideration or review of the matter will be undertaken by the Director.

A grantable petition to make an application special under 37 CFR 1.102 and the pilot program as set forth in 74 FR 64666 must be directed to a nonprovisional application filed under 35 USC 111(a) or be a national stage entry under 35 USC 371, exclusive of any reissue applications and be filed prior to the date of the notice, December 8, 2009.

In order to qualify for special status, the following requirements must be met. 1) The application must have no more than 3 independent claims and no more than 20 total claims. 2) The application must not contain any multiple dependent claims. 3) The petition must state the basis for seeking special status, i.e., the claimed invention either: A) materially enhances the quality of the environment or B) materially contributes to: i) the discovery or development of renewable energy resources, ii) the more efficient utilization and conservation of energy resources, or iii) greenhouse gas emission reduction. 4) If the disclosure is not clear on its face that the claimed invention materially contributes under category (A) or (B), the petition must be accompanied by a statement by the applicant, assignee, or an attorney/agent registered to practice before the Office explaining how the materiality standard is met. 5) A statement that applicant will agree to

make an election without traverse in a telephonic interview if a restriction requirement is made by the examiner. 6) The petition to make special must be filed electronically. 7) The petition must be filed at least one day prior to the date that a first Office Action appears in the Patent Application Information Retrieval (PAIR) system. 8) The petition must be accompanied by a request for early publication in compliance with 37 CFR 1.219 and include the publication fee as set forth in 37 CFR 1.18(d).

The requirement for a fee for consideration of the petition to make special for applications pertaining to Green Technologies has been waived.

The petition lacks item 4.

In regard to item 4, applicant's statement pertaining to how the materiality standard is met does not satisfy the requirements for this pilot. The petition alleges that the claimed invention contributes to more efficient utilization and conservation of energy. The claims are generally directed to lighting device. The claims are not limited to the light emitting structure being an LED. The materiality standard does not permit an applicant to speculate as to how a hypothetical end-user might specially apply the invention in a manner that could contribute to more efficient utilization and conservation of energy. Any argument that the claimed invention can be used with LEDs is considered speculate as to how a hypothetical end-user might specially apply the claimed invention. Favorable consideration would be given if the claims were amended to specifically require the light emitting structure to be an LED.

Any reconsideration of this decision should be submitted through the USPTO electronic filing system, EFS-Web, and selecting the document description of "Petition for Green Tech Pilot" on the EFS-Web screen.

Telephone inquiries concerning this decision should be directed to Lee W. Young at 571-272-4549.

The application is being forwarded to the Technology Center Art Unit 2811 for action in its regular turn.

Lee W. Young
Quality Assurance Specialist
Technology Center 2800

Docket No.: **HI-0612** PATENT

IN THE UNITED STATES PATENT AND TRADEMARK OFFICE

In re Application of:		Confirmation No.:	**9749**
Hwan Hee JEONG		Group Art Unit:	**2811**
Serial No.:	**13/033,890**	Examiner:	**To Be Assigned**
Filed:	**February 24, 2011**	Customer No.:	**34610**

For: **LIGHT EMITTING DEVICE, METHOD OF MANUFACTURING THE LIGHT EMITTING DEVICE, LIGHT EMITTING DEVICE PACKAGE, AND LIGHTING SYSTEM**

PETITION FOR RECONSIDERATION OF PETITION TO MAKE SPECIAL UNDER THE GREEN TECHNOLOGY PILOT PROGRAM

U.S. Patent and Trademark Office
Customer Service Window, **MAIL STOP PETITIONS**
Randolph Building
401 Dulany Street
Alexandria, VA 22314

Sir:

Applicant filed a Petition to Make Special under the Green Technology Pilot Program on May 3, 2011. In response, the Patent Office provided a Decision on Petition dated May 11, 2011 (hereafter the Decision). The Decision states that the previously filed petition lacks Item #4.

Independent claims 1 and 10 have been amended to positively recite a semiconductor light emitting structure and independent claim 16 has been amended to recite a light emitting diode. Accordingly, applicant respectfully submits that the claimed features of a semiconductor light emitting structure or a light emitting diode contribute to a more efficient utilization of conservation of energy resources. Applicant further believes that the features are clearly set forth in regard to the claimed features and are set forth throughout the specification.

Applicant respectfully maintains all the statements made in the Petition filed May 3, 2011. Applicant respectfully requests that the Petition filed May 3, 2011 be granted in view of the above.

To the extent necessary, a petition for an extension of time under 37 C.F.R. §1.136 is hereby made. Please charge any shortage in fees (including any petition fee) due in connection with the filing of this, concurrent and future replies, including extension of time fees, to Deposit Account 16-0607 and please credit any excess fees to such deposit account.

Respectfully submitted,
KED & ASSOCIATES, LLP

Daniel Y.J. Kim
Registration No. 36,186

Correspondence Address:
P.O. Box 8638
Reston, VA 20195
703 766-3777 DYK/dak

Date: June 8, 2011

Please direct all correspondence to Customer Number 34610

Q:\Documents\2019-1171\282272

UNITED STATES PATENT AND TRADEMARK OFFICE

UNITED STATES DEPARTMENT OF COMMERCE
United States Patent and Trademark Office
Address: COMMISSIONER FOR PATENTS
P.O. Box 1450
Alexandria, Virginia 22313-1450
www.uspto.gov

APPLICATION NO.	FILING DATE	FIRST NAMED INVENTOR	ATTORNEY DOCKET NO.	CONFIRMATION NO.
13/033,890	02/24/2011	Hwan Hee JEONG	HI-0612	9749

34610 7590 06/21/2011
KED & ASSOCIATES, LLP
P.O. Box 8638
Reston, VA 20195

EXAMINER
GURLEY, LYNNE ANN

ART UNIT	PAPER NUMBER
2811	

MAIL DATE	DELIVERY MODE
06/21/2011	PAPER

Please find below and/or attached an Office communication concerning this application or proceeding.

The time period for reply, if any, is set in the attached communication.

UNITED STATES PATENT AND TRADEMARK OFFICE

Commissioner for Patents
United States Patent and Trademark Office
P.O. Box 1450
Alexandria, VA 22313-1450
www.uspto.gov

KED & ASSOCIATES, LLP
P.O. Box 8638
Reston VA 20195

In re Application of	:	
Hwan Hee JEONG	:	DECISION ON PETITION
Application No. 13/033,890	:	TO MAKE SPECIAL UNDER
Filed: February 24, 2011	:	THE GREEN TECHNOLOGY
Attorney Docket No. HI-0612	:	PILOT PROGRAM

This is a decision on the petition under 37 CFR 1.102, filed on May 03, 2011 and renewed on June 08, 2011, to make the above-identified application special under the pilot program for applications pertaining to Green Technologies as set forth 74 Federal Register Notice 64666 (December 8, 2009) and amended by 75 Federal Register Notice 28554 (May 21, 2010) and 75 Federal Register Notice 69049 (November 10, 2010).

The petition is **GRANTED**.

A grantable petition to make an application special under 37 CFR 1.102 and the pilot program as set forth in 74 FR 64666 must be directed to a nonprovisional application filed under 35 USC 111(a) or be a national stage entry under 35 USC 371, exclusive of any reissue applications.

In order to qualify for special status, the following requirements must be met. 1) The application must have no more than 3 independent claims and no more than 20 total claims. 2) The application must not contain any multiple dependent claims. 3) The petition must state the basis for seeking special status, i.e., the claimed invention either: A) materially enhances the quality of the environment or B) materially contributes to: i) the discovery or development of renewable energy resources, ii) the more efficient utilization and conservation of energy resources, or iii) greenhouse gas emission reduction. 4) If the disclosure is not clear on its face that the claimed invention materially contributes under category (A) or (B), the petition must be accompanied by a statement by the applicant, assignee, or an attorney/agent registered to practice before the Office explaining how the materiality standard is met. 5) A statement that applicant will agree to make an election without traverse in a telephonic interview if a restriction requirement is made by the examiner. 6) The petition to make special must be filed electronically. 7) The petition must be filed at least one day prior to the date that a first Office Action appears in the Patent Application Information Retrieval (PAIR) system. 8) The petition must be accompanied by a request for early publication in compliance with 37 CFR 1.219 and include the publication fee as set forth in 37 CFR 1.18(d).

The requirement for a fee for consideration of the petition to make special for applications pertaining to Green Technologies has been waived.

The instant petition complies with items 1 – 8 above. Accordingly, the above-identified application has been accorded "special" status.

Telephone inquires concerning this decision should be directed to Lee W. Young at 571-272-4549.

The application is being forwarded to the Technology Center Art Unit 2811 for action on the merits commensurate with this decision.

Lee W. Young
Quality Assurance Specialist
Technology Center 2800

UNITED STATES PATENT AND TRADEMARK OFFICE

UNITED STATES DEPARTMENT OF COMMERCE
United States Patent and Trademark Office
Address: COMMISSIONER FOR PATENTS
P.O. Box 1450
Alexandria, Virginia 22313-1450
www.uspto.gov

APPLICATION NO.	FILING DATE	FIRST NAMED INVENTOR	ATTORNEY DOCKET NO.	CONFIRMATION NO.
13/033,899	02/24/2011	Huai-Hung Kao	1167-CON-CON-01	9760

35811 7590 03/07/2011
IP GROUP OF DLA PIPER LLP (US)
ONE LIBERTY PLACE
1650 MARKET ST, SUITE 4900
PHILADELPHIA, PA 19103

EXAMINER

ART UNIT	PAPER NUMBER
1615	

NOTIFICATION DATE	DELIVERY MODE
03/07/2011	ELECTRONIC

Please find below and/or attached an Office communication concerning this application or proceeding.

The time period for reply, if any, is set in the attached communication.

Notice of the Office communication was sent electronically on above-indicated "Notification Date" to the following e-mail address(es):

pto.phil@dlapiper.com

UNITED STATES PATENT AND TRADEMARK OFFICE

Commissioner for Patents
United States Patent and Trademark Office
P.O. Box 1450
Alexandria, VA 22313-1450
www.uspto.gov

MAR 0 7 2011

IP GROUP OF DLA PIPER LLP (US)
ONE LIBERTY PLACE
1650 MARKET ST, SUITE 4900
PHILADELPHIA PA 19103

In re Application of:
Kao et al.

Serial No.: 13/033,899

Filed: February 24, 2011

Docket No.: **1167-CON-CON-01**

Title: **ABUSE-RESISTANT OPIOID DOSAGE FORM**

DECISION ON REQUEST FOR CONSIDERATION TO MAKE SPECIAL FOR NEW APPLICATION UNDER 37 C.F.R. § 1.102 & M.P.E.P. § 708.02

This is a decision on the petition filed on February 24, 2011 to make the above-identified application special for accelerated examination procedure under 37 C.F.R. § 1.102(d).

The petition to make the application special is GRANTED.

The application is eligible for accelerated examination and the petition complies with the conditions for granting the application special status pursuant to the "Change to Practice for Petitions in Patent Applications to Make Special and for Accelerated Examination" published June 26, 2006, in the Federal Register. (71 Fed. Reg. 36323).

The prosecution of the instant application will be conducted expeditiously according to the following guidelines.

1. The application will be docketed to an examiner and taken up for action within two weeks of the date of this decision.

2. Restriction Practice:
   If the examiner determines that the claims are not directed to a single invention, a telephone request to elect one single invention will be made pursuant to MPEP 812.01. As a prerequisite to the grant of this petition, the applicant has agreed to make an oral election, by telephone, without traverse. If the applicant refuses to make an election without traverse, or the examiner cannot reach the applicant after a reasonable effort, the examiner will treat the first claimed invention (invention defined by claim 1) as having being constructively elected without traverse for examination.

3. Office action:
   If it is determined that, after appropriate consultation, there is a potential rejection or any other issue to be addressed, the examiner will telephone the applicant and arrange an interview to discuss and resolve the issue. An Office action, other than a Notice of Allowance and Fee(s) Due (Notice of Allowance), will not be issued unless either: 1) an interview was conducted but did not result in agreed to action that places the application in condition for allowance, or, 2) a determination is made that an interview would be unlikely to result in the application being placed in condition for allowance, and 3) an internal conference has been held to review any rejection of any claim.

4. Time for Reply:
   An Office action other than a Notice of Allowance or a final Office action will set a shortened statutory period of one month or thirty days, whichever is longer, for reply with no extension of time available under 37 CFR 1.136(a). Failure to timely file a reply within this non-extendible period for reply will result in the abandonment of the application.

5. Reply by Applicant:
   A timely reply to an Office action other than the Notice of Allowance must be submitted electronically via EFS or EFS-web and limited to addressing the rejections, objections and requirement made. Any amendment that attempts to: 1) add claims which would result in more than three pending independent claims or more than twenty pending total claims; 2) present claims not encompassed by the pre-examination search or an updated accelerated examination support document; or 3) present claims that are directed a non-elected invention or an invention other than that previously claimed and examined in the application, will be treated as not fully responsive and will not be entered.

   For any amendment to the claims (including any new claim) that is not encompassed by the accelerated examination support document, applicant must provide an updated accelerated examination support document that encompasses the amended or new claims at the time of filing of the amendment.

   To proceed expeditiously with the examination, it is recommended that a reply with amendments made to any claim or with any new claim being added be accompanied by an updated accelerated examination support document or a statement explaining how the amended or new claim is supported by the original accelerated examination support document.

6. Information Disclosure Statement (IDS):
7. Any IDS filed during prosecution must be submitted electronically via EFS or EFS-web, accompanied by an updated accelerated examination support document, and be in compliance with 37 CFR 1.97 and 1.98.

8. Post-Allowance Processing:

To expedite processing of the allowed application into a patent, the applicant must: 1) pay the required fees within one month of the date of the Notice of Allowance, and 2) not file any post allowance papers not required by the Office. In no event may the issue fee be paid and accepted later than three months from the date of the Notice of Allowance.

9. After-Final and Appeal Procedures:
   To expedite prosecution, after receiving the final Office action, applicant must: 1) promptly file a notice of appeal, an appeal brief and appeal fees; and 2) not request a pre-appeal brief conference.

   Any amendment, affidavit or other evidence filed after final Office action must comply with applicable rules and the requirements outlined in numbered paragraphs 5 and 6 above.

   On appeal, the application will proceed according to normal appeal procedures. After appeal, the application will again be treated special.

10. Proceedings Outside the Normal Examination Process:
    If the application becomes involved in a proceeding that is outside the normal examination process (e.g., a secrecy order, national security review, interference proceeding, petitions under 37 CFR 1.181, 182 or 183), the application will be treated special before and after such proceeding.

11. Final Disposition:
    The twelve month goal of this accelerated examination procedure ends with a final disposition. The mailing of a final Office action, a Notice of Allowance, the filing of a Notice of Appeal, or the filing of a Request for Continued Examination (RCE) is the final disposition.

If, during prosecution, a paper is not filed electronically using EFS-web, a reply is filed but is not fully responsive, the application is involved in an appeal, or a proceeding outside normal examination process, the application will still be examined expeditiously, however, the final disposition may occur more than twelve months from the filing of the application.

Any inquiry regarding this decision should be directed to Marianne C. Seidel, Quality Assurance Specialist, at (571) 272-0584.

/MC Seidel/
Marianne C. Seidel, Quality Assurance Specialist
Technology Center 1600

Doc Code: PET.GREEN
Document Description: Petition for Green Tech Pilot

PTO/SB/420 (11-10)
Approved for use through 01/31/2011. OMB 0651-0062
U.S. Patent and Trademark Office; U. S. DEPARTMENT OF COMMERCE
Under the Paperwork Reduction Act of 1995, no persons are required to respond to a collection of information unless it displays a valid OMB control number.

PETITION TO MAKE SPECIAL UNDER THE GREEN TECHNOLOGY PILOT PROGRAM

Attorney Docket Number: 51017-95310	Application Number (if known): 13033913	Filing date: 2011-02-24
First Named Inventor: Ryan Sven Johnson		
Title: Method and System for Reducing Carbon Emissions Arising from Vehicle Travel		

APPLICANT HEREBY REQUESTS TO PARTICIPATE IN THE GREEN TECHNOLOGY PILOT PROGRAM FOR THE ABOVE-IDENTIFIED APPLICATION. See Instruction Sheet on page 2.

This petition must be timely filed electronically using the USPTO electronic filing system, EFS-Web.

1. By filing this petition:

   Applicant is requesting early publication: Applicant hereby requests early publication under 37 CFR 1.219 and the publication fee set forth in 37 CFR 1.18(d) accompanies this request.

2. By filing this petition: applicant is agreeing to make an election without traverse in a telephonic interview and elect an invention that meets the eligibility requirements for the Green Technology Pilot Program, if the Office determines that the claims are not obviously directed to a single invention. See Instruction Sheet.

3. This request is accompanied by statements of special status for the eligibility requirement.

4. The application contains no more than three (3) independent claims and twenty (20) total claims.

5. The application does not contain any multiple dependent claims.

6. Other attachments: Letter in Support of Petition to Make Special

Signature /Benjamin L. Volk, Jr./	Date 2011-02-24
Name (Print/Typed) Benjamin L. Volk, Jr.	Registration Number 48017

Note: *Signatures of all the inventors or assignees of record of the entire interest or their representative(s) are required in accordance with 37 CFR 1.33 and 11.18. Please see 37 CFR 1.4(d) for the form of the signature. If necessary, submit multiple forms for more than one signature see below*.*

☒ *Total of 2 forms are submitted.

The information is required to obtain or retain a benefit by the public which is to file (and by the USPTO to process) an application. Confidentiality is governed by 35 U.S.C. 122 and 37 CFR 1.11 and 1.14. This collection is estimated to take 12 hours to complete, including gathering, preparing, and submitting the completed application form to the USPTO. Time will vary depending upon the individual case. Any comments on the amount of time you require to complete this form and/or suggestions for reducing this burden, should be sent to the Chief Information Officer, U.S. Patent and Trademark Office, U.S. Department of Commerce, P.O. Box 1450, Alexandria, VA 22313-1450. DO NOT SEND FEES OR COMPLETED FORMS TO THIS ADDRESS. **SEND TO: Commissioner for Patents, P.O. Box 1450, Alexandria, VA 22313-1450.**

If you need assistance in completing the form, call 1-800-PTO-9199 and select option 2.

Under the Paperwork Reduction Act of 1995, no persons are required to respond to a collection of information unless it displays a valid OMB control number.

Instruction Sheet for Petition to Make Special Under the Green Technology Pilot Program

(Not to be Submitted to the USPTO)

The following is a summary of the requirements (for more information see the notices (i) "Pilot Program for Green Technologies Including Greenhouse Gas Reduction," (ii) "Elimination of Classification Requirement in the Green Technology Pilot Program," and (iii) "Expansion and Extension of the Green Technology Pilot Program," available on the USPTO web site at http://www.uspto.gov/patents/init_events/green_tech.jsp):

1) The application must be a non-reissue, non-provisional utility application filed under 35 U.S.C. 111 (a), or an international application that has entered the national stage in compliance with 35 U.S.C. 371, irrespective of the filing date of the application. Reexamination proceedings are excluded from this pilot program.

2) The application must contain three or fewer independent claims and twenty or fewer total claims. The application must not contain any multiple dependent claims. For an application that contains more than three independent claims or twenty total claims, or multiple dependent claims, applicant must file a preliminary amendment in compliance with 37 CFR 1.121 to cancel the excess claims and/or the multiple dependent claims at the time the petition to make special is filed.

3) The claims must be directed to a single invention that materially enhances the quality of the environment, or that materially contributes to: (1) the discovery or development of renewable energy resources; (2) the more efficient utilization and conservation of energy resources; or (3) green house gas emission reduction (see the eligibility requirements of sections II and III of the notice (i) cited above). The petition must include a statement that, if the USPTO determines that the claims are directed to multiple inventions (e.g., in a restriction requirement), applicant will agree to make an election without traverse in a telephonic interview, and elect an invention that meets the eligibility requirements in section II or III of the notice (i) cited above.

4) The petition to make special must be timely filed electronically using the USPTO electronic filing system, EFS-Web, and selecting the document description of "Petition for Green Tech Pilot" on the EFS-Web screen. Applicant should use form PTO/SB/420, which is available as a Portable Document Format (PDF) fillable form in EFS-Web and on the USPTO Web site.

5) The petition to make special must be filed at least one day prior to the date that a first Office action (which may be an Office action containing only a restriction requirement) appears in the Patent Application Information Retrieval (PAIR) system. Applicant may check the status of the application using PAIR.

6) The petition to make special must be accompanied by a request for early publication in compliance with 37 CFR 1.219 and the publication fee set forth in 37 CFR 1.18(d).

Privacy Act Statement

The **Privacy Act of 1974 (P.L. 93-579)** requires that you be given certain information in connection with your submission of the attached form related to a patent application or patent. Accordingly, pursuant to the requirements of the Act, please be advised that: (1) the general authority for the collection of this information is 35 U.S.C. 2(b)(2); (2) furnishing of the information solicited is voluntary; and (3) the principal purpose for which the information is used by the U.S. Patent and Trademark Office is to process and/or examine your submission related to a patent application or patent. If you do not furnish the requested information, the U.S. Patent and Trademark Office may not be able to process and/or examine your submission, which may result in termination of proceedings or abandonment of the application or expiration of the patent.

The information provided by you in this form will be subject to the following routine uses:

1. The information on this form will be treated confidentially to the extent allowed under the Freedom of Information Act (5 U.S.C. 552) and the Privacy Act (5 U.S.C 552a). Records from this system of records may be disclosed to the Department of Justice to determine whether disclosure of these records is required by the Freedom of Information Act.
2. A record from this system of records may be disclosed, as a routine use, in the course of presenting evidence to a court, magistrate, or administrative tribunal, including disclosures to opposing counsel in the course of settlement negotiations.
3. A record in this system of records may be disclosed, as a routine use, to a Member of Congress submitting a request involving an individual, to whom the record pertains, when the individual has requested assistance from the Member with respect to the subject matter of the record.
4. A record in this system of records may be disclosed, as a routine use, to a contractor of the Agency having need for the information in order to perform a contract. Recipients of information shall be required to comply with the requirements of the Privacy Act of 1974, as amended, pursuant to 5 U.S.C. 552a(m).
5. A record related to an International Application filed under the Patent Cooperation Treaty in this system of records may be disclosed, as a routine use, to the International Bureau of the World Intellectual Property Organization, pursuant to the Patent Cooperation Treaty.
6. A record in this system of records may be disclosed, as a routine use, to another federal agency for purposes of National Security review (35 U.S.C. 181) and for review pursuant to the Atomic Energy Act (42 U.S.C. 218(c)).
7. A record from this system of records may be disclosed, as a routine use, to the Administrator, General Services, or his/her designee, during an inspection of records conducted by GSA as part of that agency's responsibility to recommend improvements in records management practices and programs, under authority of 44 U.S.C. 2904 and 2906. Such disclosure shall be made in accordance with the GSA regulations governing inspection of records for this purpose, and any other relevant (*i.e.*, GSA or Commerce) directive. Such disclosure shall not be used to make determinations about individuals.
8. A record from this system of records may be disclosed, as a routine use, to the public after either publication of the application pursuant to 35 U.S.C. 122(b) or issuance of a patent pursuant to 35 U.S.C. 151. Further, a record may be disclosed, subject to the limitations of 37 CFR 1.14, as a routine use, to the public if the record was filed in an application which became abandoned or in which the proceedings were terminated and which application is referenced by either a published application, an application open to public inspection or an issued patent.
9. A record from this system of records may be disclosed, as a routine use, to a Federal, State, or local law enforcement agency, if the USPTO becomes aware of a violation or potential violation of law or regulation.

UNITED STATES PATENT AND TRADEMARK OFFICE

UNITED STATES DEPARTMENT OF COMMERCE
United States Patent and Trademark Office
Address: COMMISSIONER FOR PATENTS
P.O. Box 1450
Alexandria, Virginia 22313-1450
www.uspto.gov

APPLICATION NO.	FILING DATE	FIRST NAMED INVENTOR	ATTORNEY DOCKET NO.	CONFIRMATION NO.
13/033,913	02/24/2011	Ryan Sven Johnson	51017-95310	9794

21888 7590 03/17/2011
THOMPSON COBURN LLP
ONE US BANK PLAZA
SUITE 3500
ST LOUIS, MO 63101

EXAMINER

ART UNIT	PAPER NUMBER
3628	

NOTIFICATION DATE	DELIVERY MODE
03/17/2011	ELECTRONIC

Please find below and/or attached an Office communication concerning this application or proceeding.

The time period for reply, if any, is set in the attached communication.

Notice of the Office communication was sent electronically on above-indicated "Notification Date" to the following e-mail address(es):

IPDOCKET@THOMPSONCOBURN.COM

UNITED STATES PATENT AND TRADEMARK OFFICE

Commissioner for Patents
United States Patent and Trademark Office
P.O. Box 1450
Alexandria, VA 22313-1450
www.uspto.gov

MAR 16 2011

THOMPSON COBURN LLP
ONE US BANK PLAZA
SUITE 3500
ST LOUIS MO 63101

In re Application of	:	
Ryan JOHNSON	:	DECISION ON PETITION
Application No. 13/033,913	:	TO MAKE SPECIAL UNDER
Filed: February 24, 2011	:	THE GREEN TECHNOLOGY
Attorney Docket No. 51017- 95310	:	PILOT PROGRAM

This is a decision on the petition under 37 CFR 1.102, filed February 24, 2011 to make the above-identified application special under the pilot program for applications pertaining to Green Technologies as set forth in 74 Federal Register Notice 64666 (December 8, 2009) and amended by 75 Federal Register Notice 28554 (May 21, 2010) and 75 Federal Register Notice 69049 (November 10, 2010).

The petition is **DISMISSED**.

If reconsideration of this decision is desired, a petition for reconsideration must be filed within ONE (1) MONTH OR THIRTY (30) DAYS from the mail date of this decision, whichever is longer. No extension of this time limit can be granted under 37 CFR 1.136(a) or (b). The petition for reconsideration should include an exhaustive attempt to provide the lacking item(s) noted below, since, after a decision on the petition for reconsideration, no further reconsideration or review of the matter will be undertaken by the Director.

A grantable petition to make an application special under 37 CFR 1.102 and the pilot program as set forth in 74 FR 64666 must be directed to a nonprovisional application filed under 35 USC 111(a) or be a national stage entry under 35 USC 371, exclusive of any reissue applications.

In order to qualify for special status, the following requirements must be met. 1) The application must have no more than 3 independent claims and no more than 20 total claims. 2) The application must not contain any multiple dependent claims. 3) The petition must state the basis for seeking special status, i.e., the claimed invention either: A) materially enhances the quality of the environment or B) materially contributes to: i) the discovery or development of renewable energy resources, ii) the more efficient utilization and conservation of energy resources, or iii) greenhouse gas emission reduction. 4) If the disclosure is not clear on its face that the claimed invention materially contributes under category (A) or (B), the petition must be accompanied by a statement by the applicant, assignee, or an attorney/agent registered to practice before the

Office explaining how the materiality standard is met. 5) A statement that applicant will agree to make an election without traverse in a telephonic interview if a restriction requirement is made by the examiner. 6) The petition to make special must be filed electronically. 7) The petition must be filed at least one day prior to the date that a first Office Action appears in the Patent Application Information Retrieval (PAIR) system. 8) The petition must be accompanied by a request for early publication in compliance with 37 CFR 1.219 and include the publication fee as set forth in 37 CFR 1.18(d).

The requirement for a fee for consideration of the petition to make special for applications pertaining to Green Technologies has been waived.

The petition lacks item 4.

In regard to item 4, the claimed computer system for reducing carbon emission arising from vehicle travel and its method thereof would not materially contribute to greenhouse gas reduction since each vehicle travel mode emits greenhouse gas. As long as a vehicle emits greenhouse gas, said vehicle would not contribute to greenhouse gas reduction. A travel management system that utilizes the selection rule of "lowest monetary cost" would not necessarily result in a vehicle travel mode selection with the lowest carbon emissions. The distance for a trip and an emissions rating for a vehicle are not accurate factors for determining the carbon emissions of a vehicle. The distance of a trip does not take into account traffic patterns, road condition, the type of road (interstate highways versus local roads), the weather and other elements that affect the carbon emissions of a vehicle. The emissions rating for a vehicle does not take into account the condition of a vehicle, the load placed on the vehicle, or the driving style of the driver, which also affects the carbon emission of a vehicle. A low estimate for one vehicle travel mode using the travel management software may be much higher in reality compared to other vehicle travel modes when other factors mentioned above are taken into consideration. As stated in the notice, the materiality standard does not permit an applicant to speculate as to how a hypothetical end-user might specially apply the invention in a manner than could materially contribute to category (A) or (B). *Also see MPEP § 708.02 (VI).* Accordingly, it is not agreed that the application on its face meets that materiality standard.

Any reconsideration of this decision should be submitted through the USPTO electronic filing system, EFS-Web, and selecting the document description of "Petition for Green Tech Pilot" on the EFS-Web screen.

Telephone inquiries concerning this decision should be directed to Lanna Mai at 571-272-6867.

The application is being forwarded to the Technology Center Art Unit 3628 for action in its regular turn.

/Lanna Mai/

Lanna Mai
Quality Assurance Specialist
Technology Center 3600

Doc Code: PET.GREEN
Document Description: Petition for Green Tech Pilot

PTO/SB/420 (11-10)
Approved for use through 01/31/2011. OMB 0651-0062
U.S. Patent and Trademark Office; U. S. DEPARTMENT OF COMMERCE
Under the Paperwork Reduction Act of 1995, no persons are required to respond to a collection of information unless it displays a valid OMB control number.

PETITION TO MAKE SPECIAL UNDER THE GREEN TECHNOLOGY PILOT PROGRAM

Attorney Docket Number: 51017-95310	Application Number (if known): 13033913	Filing date: 2011-02-24
First Named Inventor: Ryan Sven Johnson		
Title: Method and System for Reducing Carbon Emissions Arising from Vehicle Travel		

APPLICANT HEREBY REQUESTS TO PARTICIPATE IN THE GREEN TECHNOLOGY PILOT PROGRAM FOR THE ABOVE-IDENTIFIED APPLICATION. See Instruction Sheet on page 2.

This petition must be timely filed electronically using the USPTO electronic filing system, EFS-Web.

1. By filing this petition:

   Applicant is requesting early publication: Applicant hereby requests early publication under 37 CFR 1.219 and the publication fee set forth in 37 CFR 1.18(d) accompanies this request.

2. By filing this petition: applicant is agreeing to make an election without traverse in a telephonic interview and elect an invention that meets the eligibility requirements for the Green Technology Pilot Program, if the Office determines that the claims are not obviously directed to a single invention. See Instruction Sheet.

3. This request is accompanied by statements of special status for the eligibility requirement.

4. The application contains no more than three (3) independent claims and twenty (20) total claims.

5. The application does not contain any multiple dependent claims.

6. Other attachments: Petition for Reconsideration

Signature /Benjamin L. Volk, Jr./	Date 2011-04-18
Name (Print/Typed) Benjamin L. Volk, Jr.	Registration Number 48017

Note: *Signatures of all the inventors or assignees of record of the entire interest or their representative(s) are required in accordance with 37 CFR 1.33 and 11.18. Please see 37 CFR 1.4(d) for the form of the signature. If necessary, submit multiple forms for more than one signature see below*.*

☒ *Total of 2 forms are submitted.

The information is required to obtain or retain a benefit by the public which is to file (and by the USPTO to process) an application. Confidentiality is governed by 35 U.S.C. 122 and 37 CFR 1.11 and 1.14. This collection is estimated to take 12 hours to complete, including gathering, preparing, and submitting the completed application form to the USPTO. Time will vary depending upon the individual case. Any comments on the amount of time you require to complete this form and/or suggestions for reducing this burden, should be sent to the Chief Information Officer, U.S. Patent and Trademark Office, U.S. Department of Commerce, P.O. Box 1450, Alexandria, VA 22313-1450. DO NOT SEND FEES OR COMPLETED FORMS TO THIS ADDRESS. **SEND TO: Commissioner for Patents, P.O. Box 1450, Alexandria, VA 22313-1450.**

If you need assistance in completing the form, call 1-800-PTO-9199 and select option 2.

Under the Paperwork Reduction Act of 1995, no persons are required to respond to a collection of information unless it displays a valid OMB control number.

Instruction Sheet for Petition to Make Special Under the Green Technology Pilot Program

(Not to be Submitted to the USPTO)

The following is a summary of the requirements (for more information see the notices (i) "Pilot Program for Green Technologies Including Greenhouse Gas Reduction," (ii) "Elimination of Classification Requirement in the Green Technology Pilot Program," and (iii) "Expansion and Extension of the Green Technology Pilot Program," available on the USPTO web site at http://www.uspto.gov/patents/init_events/green_tech.jsp):

1) The application must be a non-reissue, non-provisional utility application filed under 35 U.S.C. 111 (a), or an international application that has entered the national stage in compliance with 35 U.S.C. 371, irrespective of the filing date of the application. Reexamination proceedings are excluded from this pilot program.

2) The application must contain three or fewer independent claims and twenty or fewer total claims. The application must not contain any multiple dependent claims. For an application that contains more than three independent claims or twenty total claims, or multiple dependent claims, applicant must file a preliminary amendment in compliance with 37 CFR 1.121 to cancel the excess claims and/or the multiple dependent claims at the time the petition to make special is filed.

3) The claims must be directed to a single invention that materially enhances the quality of the environment, or that materially contributes to: (1) the discovery or development of renewable energy resources; (2) the more efficient utilization and conservation of energy resources; or (3) green house gas emission reduction (see the eligibility requirements of sections II and III of the notice (i) cited above). The petition must include a statement that, if the USPTO determines that the claims are directed to multiple inventions (e.g., in a restriction requirement), applicant will agree to make an election without traverse in a telephonic interview, and elect an invention that meets the eligibility requirements in section II or III of the notice (i) cited above.

4) The petition to make special must be timely filed electronically using the USPTO electronic filing system, EFS-Web, and selecting the document description of "Petition for Green Tech Pilot" on the EFS-Web screen. Applicant should use form PTO/SB/420, which is available as a Portable Document Format (PDF) fillable form in EFS-Web and on the USPTO Web site.

5) The petition to make special must be filed at least one day prior to the date that a first Office action (which may be an Office action containing only a restriction requirement) appears in the Patent Application Information Retrieval (PAIR) system. Applicant may check the status of the application using PAIR.

6) The petition to make special must be accompanied by a request for early publication in compliance with 37 CFR 1.219 and the publication fee set forth in 37 CFR 1.18(d).

Privacy Act Statement

The **Privacy Act of 1974 (P.L. 93-579)** requires that you be given certain information in connection with your submission of the attached form related to a patent application or patent. Accordingly, pursuant to the requirements of the Act, please be advised that: (1) the general authority for the collection of this information is 35 U.S.C. 2(b)(2); (2) furnishing of the information solicited is voluntary; and (3) the principal purpose for which the information is used by the U.S. Patent and Trademark Office is to process and/or examine your submission related to a patent application or patent. If you do not furnish the requested information, the U.S. Patent and Trademark Office may not be able to process and/or examine your submission, which may result in termination of proceedings or abandonment of the application or expiration of the patent.

The information provided by you in this form will be subject to the following routine uses:

1. The information on this form will be treated confidentially to the extent allowed under the Freedom of Information Act (5 U.S.C. 552) and the Privacy Act (5 U.S.C 552a). Records from this system of records may be disclosed to the Department of Justice to determine whether disclosure of these records is required by the Freedom of Information Act.
2. A record from this system of records may be disclosed, as a routine use, in the course of presenting evidence to a court, magistrate, or administrative tribunal, including disclosures to opposing counsel in the course of settlement negotiations.
3. A record in this system of records may be disclosed, as a routine use, to a Member of Congress submitting a request involving an individual, to whom the record pertains, when the individual has requested assistance from the Member with respect to the subject matter of the record.
4. A record in this system of records may be disclosed, as a routine use, to a contractor of the Agency having need for the information in order to perform a contract. Recipients of information shall be required to comply with the requirements of the Privacy Act of 1974, as amended, pursuant to 5 U.S.C. 552a(m).
5. A record related to an International Application filed under the Patent Cooperation Treaty in this system of records may be disclosed, as a routine use, to the International Bureau of the World Intellectual Property Organization, pursuant to the Patent Cooperation Treaty.
6. A record in this system of records may be disclosed, as a routine use, to another federal agency for purposes of National Security review (35 U.S.C. 181) and for review pursuant to the Atomic Energy Act (42 U.S.C. 218(c)).
7. A record from this system of records may be disclosed, as a routine use, to the Administrator, General Services, or his/her designee, during an inspection of records conducted by GSA as part of that agency's responsibility to recommend improvements in records management practices and programs, under authority of 44 U.S.C. 2904 and 2906. Such disclosure shall be made in accordance with the GSA regulations governing inspection of records for this purpose, and any other relevant (*i.e.*, GSA or Commerce) directive. Such disclosure shall not be used to make determinations about individuals.
8. A record from this system of records may be disclosed, as a routine use, to the public after either publication of the application pursuant to 35 U.S.C. 122(b) or issuance of a patent pursuant to 35 U.S.C. 151. Further, a record may be disclosed, subject to the limitations of 37 CFR 1.14, as a routine use, to the public if the record was filed in an application which became abandoned or in which the proceedings were terminated and which application is referenced by either a published application, an application open to public inspection or an issued patent.
9. A record from this system of records may be disclosed, as a routine use, to a Federal, State, or local law enforcement agency, if the USPTO becomes aware of a violation or potential violation of law or regulation.

Application No. 13/033,913
Attorney Docket No. 51017-95310

PATENT

IN THE UNITED STATES PATENT AND TRADEMARK OFFICE
CERTIFICATE OF E-FILING

I hereby certify that this correspondence has been e-filed with the U.S. Patent and Trademark Office on Monday, April 18, 2011.

/Benjamin L. Volk, Jr./
Benjamin L. Volk, Jr.
Reg. No. 48,017

In re application of: Johnson	:	
Serial No.: 13/033,913	:	Examiner: TBD
Filed: February 24, 2011	:	Group Art Unit: 3628
For: Method and System for Reducing Carbon Emissions Arising from Vehicle Travel	:	

Petition for Reconsideration of Denial Of Petition to Make Special Under Green Technology Pilot Program

In a Decision mailed March 17, 2011, the Office dismissed Applicant's petition for acceptance of this patent application into the Green Technology Pilot Program. This Decision set a one month deadline for filing a petition for reconsideration. Because this one month deadline fell on Sunday, April 17, 2011, Applicant notes that the deadline for response is Monday, April 18, 2011. As such, Applicant hereby submits the following request for reconsideration in support of a renewed Petition to Make Special Under the Green Technology Pilot Program.

In pertinent part, the Decision stated that Applicant's petition lacked "item 4" which corresponds to a requirement include a statement from Applicant explaining how the claimed invention materially enhances the quality of the environment or materially contributes to (i)

the discovery or development of renewable energy resources, (ii) the more efficient utilization and conservation of energy resources, or (iii) greenhouse gas reduction.

In response, Applicant submits the following statements in support of item (4) of the petition requirements.

Regarding Applicant's original Petition, the Decision alleged that Applicant's statement for item (4) in the original Petition was deficient:

> In regard to item 4, the claimed computer system for reducing carbon emission arising from vehicle travel and its method thereof would not materially contribute to greenhouse gas reduction since each vehicle travel mode emits greenhouse gas. As long as a vehicle emits greenhouse gas, said vehicle would not contribute to greenhouse gas reduction. A travel management system that utilizes the selection rule of "lowest monetary cost" would not necessarily result in a vehicle travel mode selection with the lowest carbon emissions.

However, Applicant respectfully submits that this position by the Office does not properly consider Applicant's Petition in the context of the "claimed invention" as required. Instead, the Office relies on unclaimed aspects of the disclosure, in particular the disclosed "lowest monetary cost" rule for making selections between vehicle travel modes. Applicant notes that none of the claims in this patent application recite the "lowest monetary cost" rule for selecting among vehicle travel modes. Instead, such claims are present in co-pending patent application 12/752,903 (see, for example, claim 2 of the '903 application), for which Applicant has not requested entry into the Green Technology Pilot Program. Applicant notes that all claims of this patent application are drawn to a system/method/ computer program product that operates to "simulate how a plurality of vehicle travel plans for at least one vehicle travel mode would generate carbon emissions", and "in response to the simulation, generate a report indicative of how the vehicle travel plans impact the carbon emissions, wherein the at least one vehicle travel mode comprises at least one selected from the group consisting of a rental vehicle travel mode, a reimbursable personal vehicle travel mode and a fleet vehicle travel mode". (See independent claim 1; see also independent claims 9, and 17).

Thus, the claimed invention operates to generate simulation reports indicative of how various vehicle travel plans for at least one vehicle travel mode would impact carbon emissions.

Figure 9D (reproduced below) of the patent application depicts an exemplary one of such reports.

ACME CORPORATION
TRAVEL MANAGEMENT SYSTEM REPORT

REPORT TYPE: SIMULATION REPORT
TIME PERIOD: January 1, 2009 – January 31, 2009

	Total Cost ($) 901	Total Emissions (kg) 903	Total Employee Time (thousands) 905	Total Distance (miles) 909	Total Weighted Value 907
Actual	32,520	14,198	2,310	70,432	627,190
Suggested	11,450	9,930	2,950	50,124	559,150
Worst-case	52,329	25,315	1,826	92,065	832,465
Simulation 1	11,520	9,781	2,950	50,124	459,105
Simulation 2	11,220	9,821	2,950	50,124	456,305
Simulation 3	12,812	9,104	2,763	49,354	424,316

Simulation 1 parameters: Add Toyota Prius to vehicle fleet
Simulation 2 parameters: Remove Ford Mustang from fleet
Simulation 3 parameters: Change cost multiplier from 10 to 8

Figure 9D

Thus, a practitioner of the claimed invention such as a company that operates a vehicle fleet or has employees who make choices between various vehicle travel modes when driving for work, can determine how various vehicle travel plans would produce carbon emissions. From such a report, a practitioner will be informed in a manner so that the practitioner can implement company policies that will have the effect of reducing the company's carbon footprint arising from vehicle travel. (See also dependent claims 4-8 and 12-16; see also Patent Application at page 53, line 1 through page 54, line 17).

As such, Applicant respectfully submits that the claimed invention materially contributes to greenhouse gas reduction by enhancing the information available to a decisionmaker about the impact of vehicle travel plans and vehicle travel modes on carbon emissions. By so informing a practitioner, the claimed invention contributes to greenhouse gas

reduction because the practitioner can make policy decisions and otherwise simulate changes in vehicle travel plans or vehicle fleets to determine which choices will result in a reduction in a company's carbon footprint.

The Decision further alleges that the invention is unable to make accurate estimates of the carbon emissions that would be produced by different vehicle travel modes:

> The distance for a trip and an emissions rating for a vehicle are not accurate factors for determining the carbon emissions of a vehicle. The distance of a trip does not take into account traffic patterns, road condition, the type of road (interstate highways versus local roads), the weather and other elements that affect the carbon emissions of a vehicle. The emissions rating for a vehicle does not take into account the condition of a vehicle, the load placed on the vehicle, or the driving style of the driver, which also affects the carbon emission of a vehicle. A low estimate for one vehicle travel mode using the travel management software may be much higher in reality compared to other vehicle travel modes when other factors mentioned above are taken into consideration.

Applicant respectfully disagrees with these statements. First, Applicant respectfully submits that trip distance and vehicle emission ratings will be the, on the whole, the largest determinants affecting the amount of carbon emissions produced by vehicles during a trip. Second, Applicant notes that independent claims 1, 9, and 17 do not specifically require that only trip distance and emissions ratings be used to simulate how the vehicle travel plans for at least one vehicle travel mode would generate carbon emissions. As such, once again Applicant respectfully submits that the Decision is not properly evaluating item (4) of the petition requirements in the context of the claimed invention.

Lastly, the Decision alleges that any greenhouse gas reductions pertaining to the invention depend on hypothetical uses:

> As stated in the notice, the materiality standard does not permit an applicant to speculate as to how a hypothetical end-user might specially apply the invention in a manner than could materially contribute to category (A) or (B). *Also see MPEP § 708.02 (VI).*

However, Applicant notes that independent claims 1, 9, and 17 expressly recite the generation of reports that are indicative of how vehicle travel plans would impact carbon emissions. Applicant respectfully submits that such a report materially contributes to greenhouse gas reduction by informing practitioners about the carbon footprints created by

vehicle fleets, thereby enabling a practitioner to devise and put in place policies that would reduce such carbon footprints.

Therefore, for the foregoing reasons, Applicant respectfully submits that the claimed invention satisfies items (3) and (4) of the petition requirements for entry into the Green Technology Pilot Program.

Moreover, to the extent required, Applicant hereby reiterates and incorporates the other elements of Applicant's original petition filed February 23, 2011.

Favorable action is respectfully requested.

Respectfully submitted,

Thompson Coburn LLP

By: /Benjamin L. Volk, Jr./
Benjamin L. Volk, Jr.
Reg. No. 48,017
One US Bank Plaza
St. Louis, MO 63101-1693
(314) 552-6352
(314) 552-7352 (fax)

UNITED STATES PATENT AND TRADEMARK OFFICE

UNITED STATES DEPARTMENT OF COMMERCE
United States Patent and Trademark Office
Address: COMMISSIONER FOR PATENTS
P.O. Box 1450
Alexandria, Virginia 22313-1450
www.uspto.gov

APPLICATION NO.	FILING DATE	FIRST NAMED INVENTOR	ATTORNEY DOCKET NO.	CONFIRMATION NO.
13/033,913	02/24/2011	Ryan Sven Johnson	51017-95310	9794

21888 7590 06/06/2011
THOMPSON COBURN LLP
ONE US BANK PLAZA
SUITE 3500
ST LOUIS, MO 63101

EXAMINER
SALIARD, SHANNON S

ART UNIT	PAPER NUMBER
3628	

NOTIFICATION DATE	DELIVERY MODE
06/06/2011	ELECTRONIC

Please find below and/or attached an Office communication concerning this application or proceeding.

The time period for reply, if any, is set in the attached communication.

Notice of the Office communication was sent electronically on above-indicated "Notification Date" to the following e-mail address(es):

IPDOCKET@THOMPSONCOBURN.COM

UNITED STATES PATENT AND TRADEMARK OFFICE

Commissioner for Patents
United States Patent and Trademark Office
P.O. Box 1450
Alexandria, VA 22313-1450
www.uspto.gov

JUN - 3 2011

THOMPSON COBURN LLP
ONE US BANK PLAZA
SUITE 3500
ST LOUIS MO 63101

In re Application of	:	
Ryan JOHNSON	:	DECISION ON PETITION
Application No. 13/033,913	:	TO MAKE SPECIAL UNDER
Filed: February 24, 2011	:	THE GREEN TECHNOLOGY
Attorney Docket No. 51017- 95310	:	PILOT PROGRAM

This is a decision on the petition under 37 CFR 1.102, filed February 24, 2011 to make the above-identified application special under the pilot program for applications pertaining to Green Technologies as set forth in 74 Federal Register Notice 64666 (December 8, 2009) and amended by 75 Federal Register Notice 28554 (May 21, 2010) and 75 Federal Register Notice 69049 (November 10, 2010).

The petition is **DENIED**.

A grantable petition to make an application special under 37 CFR 1.102 and the pilot program as set forth in 74 FR 64666 must be directed to a nonprovisional application filed under 35 USC 111(a) or be a national stage entry under 35 USC 371, exclusive of any reissue applications.

In order to qualify for special status, the following requirements must be met. 1) The application must have no more than 3 independent claims and no more than 20 total claims. 2) The application must not contain any multiple dependent claims. 3) The petition must state the basis for seeking special status, i.e., the claimed invention either: A) materially enhances the quality of the environment or B) materially contributes to: i) the discovery or development of renewable energy resources, ii) the more efficient utilization and conservation of energy resources, or iii) greenhouse gas emission reduction. 4) If the disclosure is not clear on its face that the claimed invention materially contributes under category (A) or (B), the petition must be accompanied by a statement by the applicant, assignee, or an attorney/agent registered to practice before the Office explaining how the materiality standard is met. 5) A statement that applicant will agree to make an election without traverse in a telephonic interview if a restriction requirement is made by the examiner. 6) The petition to make special must be filed electronically. 7) The petition must be filed at least one day prior to the date that a first Office Action appears in the Patent Application Information Retrieval (PAIR) system. 8) The petition must be accompanied by a request for early publication in compliance with 37 CFR 1.219 and include the publication fee as set forth in 37 CFR 1.18(d).

The requirement for a fee for consideration of the petition to make special for applications pertaining to Green Technologies has been waived.

The petition lacks item 4.

In regard to item 4, petitioner argues on page 4 of the renewed petition that "*trip distance and emissions rating data will be the largest determinants affecting the carbon emissions produced by a vehicle during a trip*". It is unclear how petitioner comes to this conclusion. While trip distance and emissions rating data are factors in carbon emissions, it is questionable if they are the largest determinants on carbon emissions of a vehicle. The distance of a trip does not take into account traffic patterns, road condition, the type of road (interstate highways versus local roads), the weather and other elements that affect the carbon emissions of a vehicle. The emissions rating for a vehicle does not take into account the condition of a vehicle, the loads placed on the vehicle, or the driving style of the driver, which also affects the carbon emission of a vehicle. Relying on just the trip distance and emissions rating data would result in errors in a travel plans. Petitioner further argues that "*independent claims 1, 9 and 17 do not specifically require that only trip distance and emissions ratings be used to simulate how the vehicle travel plans for at least one vehicle travel mode would generate carbon emissions.*" As it is unclear what criteria is used to evaluate the carbon emissions of a vehicle travel mode, and it is also unclear what kind of vehicle is included in a company's vehicle fleet, rental vehicle, or personal vehicle, the data presented in the travel plans and the report would be purely speculation. Therefore, petitioner's assertion of a reduction in greenhouse gas emissions is mostly speculative. As stated in the notice, the materiality standard does not permit an applicant to speculate as to how a hypothetical end-user might specially apply the invention in a manner than could materially contribute to category (A) or (B). *Also see MPEP § 708.02 (VI).* Accordingly, it is not agreed that the application on its face meets that materiality standard.

Telephone inquiries concerning this decision should be directed to Lanna Mai at 571-272-6867.

The application is being forwarded to the Technology Center Art Unit 3628 for action in its regular turn.

/Lanna Mai/

Lanna Mai
Quality Assurance Specialist
Technology Center 3600

UNITED STATES PATENT AND TRADEMARK OFFICE

Commissioner for Patents
United States Patent and Trademark Office
P.O. Box 1450
Alexandria, VA 22313-1450
www.uspto.gov

LOWE HAUPTMAN HAM &
BERNER, LLP
1700 DIAGONAL ROAD
SUITE 300
ALEXANDRIA VA 22314

MAILED

FEB 09 2012

OFFICE OF PETITIONS

In re Application of
HON et al.
Application No.: 13/033,927
Filed: February 24, 2011
Attorney Docket No.: 4952-060
(FFA-2529)
For: CONTACT TYPE MEASUREMENT DEVICE HAVING FINE CONTACT FORCE ADJUSTMENT MECHANISM

: DECISION ON REQUEST TO
: PARTICIPATE IN THE PATENT
: PROSECUTION HIGHWAY
: PROGRAM AND PETITION
: TO MAKE SPECIAL UNDER
: 37 CFR 1.102(a)

This is a decision on the request to participate in the Patent Prosecution Highway (PPH) program and the petition under 37 CFR 1.102(a), filed December 5, 2011, to make the above-identified application special.

The request and petition are **GRANTED**.

Discussion

A grantable request to participate in the PPH pilot program and petition to make special require:

1. The U.S. application is

    a. a Paris Convention application which either
        i. validly claims priority under 35 U.S.C. 119(a) and 37 CFR 1.55 to one or more applications filed in the JPO, or
        ii. validly claims priority to a PCT application that contains no priority claims, or
    b. a national stage application under the PCT (an application which entered the national stage in the U.S. from a PCT international application after compliance with 35 U.S.C. 371), which PCT application
        i. validly claims priority to an application filed in the JPO, or

ii. validly claims priority to a PCT application that contains no priority claims, or
iii. contains no priority claim, or

c. a so-called bypass application filed under 35 U.S.C. 111(a) which validly claims benefit under 35 U.S.C. 120 to a PCT application, which PCT application
   i. validly claims priority to an application filed in the JPO, or
   ii. validly claims priority to a PCT application that contains no priority claims, or
   iii. contains no priority claim;

2. Applicant must submit a copy of:
   a. The allowable/patentable claim(s) from the JPO application(s);
   b. An English translation of the allowable/patentable claim(s) and
   c. A statement that the English translation is accurate;
3. Applicant must:
   a. Ensure all the claims in the U.S. application must sufficiently correspond or be amended to sufficiently correspond to the allowable/patentable claim(s) in the JPO application(s) and
   b. Submit a claims correspondence table in English;
4. Examination of the U.S. application has <u>not</u> begun;
5. Applicant must submit:
   a. Documentation of prior office action:
      i. a copy of the office action(s) just prior to the "Decision to Grant a Patent" from each of the JPO application(s) containing the allowable/patentable claim(s) or
      ii. if the allowable/patentable claims(s) are from a "Notification of Reasons for Refusal" then the Notification of Reasons for Refusal or
      iii. if the JPO application is a first action allowance then no office action from the JPO is necessary should be indicated on the request/petition form;
   b. An English language translation of the JPO Office action from (5)(a)(i)-(ii) above
   c. A statement that the English translation is accurate;
6. Applicant must submit:
   a. An IDS listing the documents cited by the JPO examiner in the JPO office action (unless already submitted in this application)
   b. Copies of the documents except U.S. patents or U.S. patent application publications (unless already submitted in this application);

The request to participate in the PPH pilot program and petition comply with the above requirements. Accordingly, the above-identified application has been accorded "special" status.

Inquiries concerning this decision should be directed to JoAnne Burke at 571-272-4549.

All other inquiries concerning the examination or status of the application is accessible in the PAIR system at http://www.uspto.gov/ebc.index.html.

This application will be forwarded to the examiner for action on the merits commensurate with this decision once this application's formality reviews have been completed.

Ramesh Krishnamurthy
RAMESH KRISHNAMURTHY
for David Bucci
Petitions Examiner
Office of Petitions

UNITED STATES PATENT AND TRADEMARK OFFICE

Commissioner for Patents
United States Patent and Trademark Office
P.O. Box 1450
Alexandria, VA 22313-1450
www.uspto.gov

BAKER & DANIELS LLP - DOW AGROSCIENCES
300 NORTH MERIDIAN STREET SUITE 2700
INDIANAPOLIS IN 46204

MAILED
MAY 24 2011
OFFICE OF PETITIONS

In re Application of	:	
Paul G. Ouillette	:	
Application No. 13/033,971	:	DECISION ON PETITION
Filed: February 24, 2011	:	
Attorney Docket No. 68381-US-NP	:	

This is a decision on the petition under 37 CFR 1.57(a), filed April 13, 2011, requesting that the above-identified application be accorded a filing date of February 24, 2011.

The petition under 37 CFR 1.57(a) is **GRANTED**.

The instant application was deposited on February 24, 2011. However, the application omitted drawings. Accordingly, on March 10, 2011, the Office of Initial Patent Examination mailed a "Notice of Incomplete Nonprovisional Application", requiring drawings and stating that the filing date would be the date of receipt of the drawings.

In response, applicant filed the drawings, an amendment, and the instant petition under 37 CFR 1.57(a) on April 13, 2011. Applicant argues that the drawings were incorporated by reference pursuant to a priority claim to application No. 61/308,346.

With respect to the practice of incorporation by reference, the Manual of Patent Examining Procedure states:

> For applications filed on or after September 21, 2004, a claim under 35 U.S.C. 120 and 37 CFR 1.78 for benefit of a prior-filed nonprovisional application or international application designating the U.S. that was present on the

> filing date of the continuation or divisional application is considered an incorporation by reference of the prior-filed application as to inadvertently omitted material, subject to the conditions and requirements of 37 CFR 1.57(a). The purpose of 37 CFR 1.57(a) is to provide a safeguard for applicants when all or a portion of the specification and/or drawing(s) is (are) inadvertently omitted from an application.

The section goes on to state:

> For an application filed on or after September 21, 2004, if the material needed for a filing date is completely contained within a prior-filed application to which benefit is claimed, applicant may file a petition under 37 CFR 1.57(a)(3) along with the fee set forth in 37 CFR 1.17(f) and an amendment with the inadvertently omitted material requesting that the amendment be entered and the application be accorded a filing date as of the original date of deposit of the application papers. See 37 CFR 1.57(a)(3) and MPEP § 201.17.[1]

With the instant petition, petitioner has submitted drawings together with an amendment seeking their entry. Accordingly, the above-identified application is entitled to a filing date of February 24, 2011, in view of the priority claim to application No. 61/308,346, made in the specification submitted on filing.

The application is being forwarded to the Office of Patent Application Processing (OPAP) for further processing with a filing date of February 24, 2011, using the application papers received in the Office on that date and the drawings supplied on petition filed April 13, 2011. Applicants will receive appropriate notifications regarding the fees owed, if any, and other information in due course from OPAP.

Telephone inquiries specific to this decision should be directed to Petitions Attorney Cliff Congo at (571)272-3207.

Chris Bottorff
Petitions Examiner
Office of Petitions

---

[1] MPEP 201.06(c).

Doc Code: PET.GREEN
Document Description: Petition for Green Tech Pilot

PTO/SB/420 (11-10)
Approved for use through 01/31/2011. OMB 0651-0062
U.S. Patent and Trademark Office; U. S. DEPARTMENT OF COMMERCE
Under the Paperwork Reduction Act of 1995, no persons are required to respond to a collection of information unless it displays a valid OMB control number.

PETITION TO MAKE SPECIAL UNDER THE GREEN TECHNOLOGY PILOT PROGRAM

Attorney Docket Number: A0120.0001-00US	Application Number (if known): 13034030	Filing date: February 24, 2011
First Named Inventor: Zhenjiang LI		
Title: METHOD OF MAKING POLYLACTIC ACID AND ITS PRODUCTS		

APPLICANT HEREBY REQUESTS TO PARTICIPATE IN THE GREEN TECHNOLOGY PILOT PROGRAM FOR THE ABOVE-IDENTIFIED APPLICATION. See Instruction Sheet on page 2.

This petition must be timely filed electronically using the USPTO electronic filing system, EFS-Web.

1. By filing this petition:

   Applicant is requesting early publication: Applicant hereby requests early publication under 37 CFR 1.219 and the publication fee set forth in 37 CFR 1.18(d) accompanies this request.

2. By filing this petition: applicant is agreeing to make an election without traverse in a telephonic interview and elect an invention that meets the eligibility requirements for the Green Technology Pilot Program, if the Office determines that the claims are not obviously directed to a single invention. See Instruction Sheet.

3. This request is accompanied by statements of special status for the eligibility requirement.

4. The application contains no more than three (3) independent claims and twenty (20) total claims.

5. The application does not contain any multiple dependent claims.

6. Other attachments: _____

Signature /Allen Xue/	Date March 18, 2011
Name (Print/Typed) Allen (Zhi Yang) Xue	Registration Number 56,474

Note: *Signatures of all the inventors or assignees of record of the entire interest or their representative(s) are required in accordance with 37 CFR 1.33 and 11.18. Please see 37 CFR 1.4(d) for the form of the signature. If necessary, submit multiple forms for more than one signature see below*.*

☒ *Total of one forms are submitted.

The information is required to obtain or retain a benefit by the public which is to file (and by the USPTO to process) an application. Confidentiality is governed by 35 U.S.C. 122 and 37 CFR 1.11 and 1.14. This collection is estimated to take 12 hours to complete, including gathering, preparing, and submitting the completed application form to the USPTO. Time will vary depending upon the individual case. Any comments on the amount of time you require to complete this form and/or suggestions for reducing this burden, should be sent to the Chief Information Officer, U.S. Patent and Trademark Office, U.S. Department of Commerce, P.O. Box 1450, Alexandria, VA 22313-1450. DO NOT SEND FEES OR COMPLETED FORMS TO THIS ADDRESS. **SEND TO: Commissioner for Patents, P.O. Box 1450, Alexandria, VA 22313-1450.**

If you need assistance in completing the form, call 1-800-PTO-9199 and select option 2.

Under the Paperwork Reduction Act of 1995, no persons are required to respond to a collection of information unless it displays a valid OMB control number.

Instruction Sheet for Petition to Make Special Under the Green Technology Pilot Program

(Not to be Submitted to the USPTO)

The following is a summary of the requirements (for more information see the notices (i) "Pilot Program for Green Technologies Including Greenhouse Gas Reduction," (ii) "Elimination of Classification Requirement in the Green Technology Pilot Program," and (iii) "Expansion and Extension of the Green Technology Pilot Program," available on the USPTO web site at http://www.uspto.gov/patents/init_events/green_tech.jsp):

1) The application must be a non-reissue, non-provisional utility application filed under 35 U.S.C. 111 (a), or an international application that has entered the national stage in compliance with 35 U.S.C. 371, irrespective of the filing date of the application. Reexamination proceedings are excluded from this pilot program.

2) The application must contain three or fewer independent claims and twenty or fewer total claims. The application must not contain any multiple dependent claims. For an application that contains more than three independent claims or twenty total claims, or multiple dependent claims, applicant must file a preliminary amendment in compliance with 37 CFR 1.121 to cancel the excess claims and/or the multiple dependent claims at the time the petition to make special is filed.

3) The claims must be directed to a single invention that materially enhances the quality of the environment, or that materially contributes to: (1) the discovery or development of renewable energy resources; (2) the more efficient utilization and conservation of energy resources; or (3) green house gas emission reduction (see the eligibility requirements of sections II and III of the notice (i) cited above). The petition must include a statement that, if the USPTO determines that the claims are directed to multiple inventions (e.g., in a restriction requirement), applicant will agree to make an election without traverse in a telephonic interview, and elect an invention that meets the eligibility requirements in section II or III of the notice (i) cited above.

4) The petition to make special must be timely filed electronically using the USPTO electronic filing system, EFS-Web, and selecting the document description of "Petition for Green Tech Pilot" on the EFS-Web screen. Applicant should use form PTO/SB/420, which is available as a Portable Document Format (PDF) fillable form in EFS-Web and on the USPTO Web site.

5) The petition to make special must be filed at least one day prior to the date that a first Office action (which may be an Office action containing only a restriction requirement) appears in the Patent Application Information Retrieval (PAIR) system. Applicant may check the status of the application using PAIR.

6) The petition to make special must be accompanied by a request for early publication in compliance with 37 CFR 1.219 and the publication fee set forth in 37 CFR 1.18(d).

Privacy Act Statement

The **Privacy Act of 1974 (P.L. 93-579)** requires that you be given certain information in connection with your submission of the attached form related to a patent application or patent. Accordingly, pursuant to the requirements of the Act, please be advised that: (1) the general authority for the collection of this information is 35 U.S.C. 2(b)(2); (2) furnishing of the information solicited is voluntary; and (3) the principal purpose for which the information is used by the U.S. Patent and Trademark Office is to process and/or examine your submission related to a patent application or patent. If you do not furnish the requested information, the U.S. Patent and Trademark Office may not be able to process and/or examine your submission, which may result in termination of proceedings or abandonment of the application or expiration of the patent.

The information provided by you in this form will be subject to the following routine uses:

1. The information on this form will be treated confidentially to the extent allowed under the Freedom of Information Act (5 U.S.C. 552) and the Privacy Act (5 U.S.C 552a). Records from this system of records may be disclosed to the Department of Justice to determine whether disclosure of these records is required by the Freedom of Information Act.
2. A record from this system of records may be disclosed, as a routine use, in the course of presenting evidence to a court, magistrate, or administrative tribunal, including disclosures to opposing counsel in the course of settlement negotiations.
3. A record in this system of records may be disclosed, as a routine use, to a Member of Congress submitting a request involving an individual, to whom the record pertains, when the individual has requested assistance from the Member with respect to the subject matter of the record.
4. A record in this system of records may be disclosed, as a routine use, to a contractor of the Agency having need for the information in order to perform a contract. Recipients of information shall be required to comply with the requirements of the Privacy Act of 1974, as amended, pursuant to 5 U.S.C. 552a(m).
5. A record related to an International Application filed under the Patent Cooperation Treaty in this system of records may be disclosed, as a routine use, to the International Bureau of the World Intellectual Property Organization, pursuant to the Patent Cooperation Treaty.
6. A record in this system of records may be disclosed, as a routine use, to another federal agency for purposes of National Security review (35 U.S.C. 181) and for review pursuant to the Atomic Energy Act (42 U.S.C. 218(c)).
7. A record from this system of records may be disclosed, as a routine use, to the Administrator, General Services, or his/her designee, during an inspection of records conducted by GSA as part of that agency's responsibility to recommend improvements in records management practices and programs, under authority of 44 U.S.C. 2904 and 2906. Such disclosure shall be made in accordance with the GSA regulations governing inspection of records for this purpose, and any other relevant (*i.e.*, GSA or Commerce) directive. Such disclosure shall not be used to make determinations about individuals.
8. A record from this system of records may be disclosed, as a routine use, to the public after either publication of the application pursuant to 35 U.S.C. 122(b) or issuance of a patent pursuant to 35 U.S.C. 151. Further, a record may be disclosed, subject to the limitations of 37 CFR 1.14, as a routine use, to the public if the record was filed in an application which became abandoned or in which the proceedings were terminated and which application is referenced by either a published application, an application open to public inspection or an issued patent.
9. A record from this system of records may be disclosed, as a routine use, to a Federal, State, or local law enforcement agency, if the USPTO becomes aware of a violation or potential violation of law or regulation.

PATENT
Attorney Docket No. A0120.0001-00US

IN THE UNITED STATES PATENT AND TRADEMARK OFFICE

In re Application of: Zhenjiang LI et al.	)	Group Art Unit: 1614
	)	
Application No.: 13/034,030	)	Examiner: Not yet assigned
	)	
Filed: February 24, 20011	)	Confirmation No.: 1021
	)	
For: METHOD OF MAKING POLYLACTIC ACID AND ITS PRODUCTS	)	***VIA EFS WEB***

Commissioner for Patents
P.O. Box 1450
Alexandria, VA 22313-1450

Petition to Make Special Under MPEP § 708.02
- Accelerated Examination under the Pilot Program for Green Technologies

Sir:

Applicants hereby request that Application Serial No. 13/034,030 be advanced out of order under 37 CFR § 1.102 as it pertains to enhancing the quality of the environment. In particular, the claimed invention relates to a new method of making polylactic acid and its products. Polylactic acid is a type of biodegradable polymer that can be used for making biodegradable plastic goods, such as plastic bags and utensils. Consequently, the claimed invention benefits the environment by reducing plastic pollution. Furthermore, polylactic acid is traditionally made via ring-opening polymerization of lactide catalyzed by tin-containing compounds. The tin-containing catalyst is toxic. The claimed invention avoids using tin-containing compounds in making polylactic acid. Therefore, the method disclosed and claimed in the present

application as well as the end product of the claimed invention materially improve the quality of the environment.

For at least reasons set forth above, Applicants respectfully request the petition be granted.

Respectfully submitted,

Anova Law Group, PLLC

Dated: March 18, 2010

By: /Allen Xue/
Allen (Zhi Yang) Xue
Reg. No. 56,474

UNITED STATES PATENT AND TRADEMARK OFFICE

UNITED STATES DEPARTMENT OF COMMERCE
United States Patent and Trademark Office
Address: COMMISSIONER FOR PATENTS
P.O. Box 1450
Alexandria, Virginia 22313-1450
www.uspto.gov

APPLICATION NO.	FILING DATE	FIRST NAMED INVENTOR	ATTORNEY DOCKET NO.	CONFIRMATION NO.
13/034,030	02/24/2011	Zhenjiang Li	A0120.0001-00US	1021

95483 7590 03/30/2011
Anova Law Group, PLLC
8230 Boone Blvd, Suite 347
Vienna, VA 22182

EXAMINER

ART UNIT	PAPER NUMBER
1614	

NOTIFICATION DATE	DELIVERY MODE
03/30/2011	ELECTRONIC

Please find below and/or attached an Office communication concerning this application or proceeding.

The time period for reply, if any, is set in the attached communication.

Notice of the Office communication was sent electronically on above-indicated "Notification Date" to the following e-mail address(es):

contact@anovalaw.com
zhiyangxue@gmail.com
wenyetan@gmail.com

UNITED STATES PATENT AND TRADEMARK OFFICE

Commissioner for Patents
United States Patent and Trademark Office
P.O. Box 1450
Alexandria, VA 22313-1450
www.uspto.gov

MAR 3 0 2011

Anova Law Group, PLLC
8230 Boone Blvd, Suite 347
Vienna VA 22182

In re Application of	:	
LI, Zhenjiang *et al.*	:	DECISION ON PETITION
Application No. 13/034030	:	TO MAKE SPECIAL UNDER
Filed: February 24, 2011	:	THE GREEN TECHNOLOGY
Attorney Docket No. A0120.0001-00US	:	PILOT PROGRAM

This is a decision on the petition under 37 CFR 1.102, filed March 18, 2011, to make the above-identified application special under the pilot program for applications pertaining to Green Technologies as set forth in 74 Federal Register Notice 64666 (December 8, 2009) and amended by 75 Federal Register Notice 28554 (May 21, 2010) and 75 Federal Register Notice 69049 (November 10, 2010).

The petition is **GRANTED**.

A grantable petition to make an application special under 37 CFR 1.102 and the pilot program as set forth in 74 FR 64666 must be directed to a nonprovisional application filed under 35 USC 111(a) or be a national stage entry under 35 USC 371, exclusive of any reissue applications.

In order to qualify for special status, the following requirements must be met. 1) The application must have no more than 3 independent claims and no more than 20 total claims. 2) The application must not contain any multiple dependent claims. 3) The petition must state the basis for seeking special status, i.e., the claimed invention either: A) materially enhances the quality of the environment or B) materially contributes to: i) the discovery or development of renewable energy resources, ii) the more efficient utilization and conservation of energy resources, or iii) greenhouse gas emission reduction. 4) If the disclosure is not clear on its face that the claimed invention materially contributes under category (A) or (B), the petition must be accompanied by a statement by the applicant, assignee, or an attorney/agent registered to practice before the Office explaining how the materiality standard is met. 5) A statement that applicant will agree to make an election without traverse in a telephonic interview if a restriction requirement is made by the examiner. 6) The petition to make special must be filed electronically. 7) The petition must be filed at least one day prior to the date that a first Office Action appears in the Patent Application Information Retrieval (PAIR) system. 8) The petition must be accompanied by a request for early publication in compliance with 37 CFR 1.219 and include the publication fee as set forth in 37 CFR 1.18(d).

The requirement for a fee for consideration of the petition to make special for applications pertaining to Green Technologies has been waived.

The instant petition complies with items 1 – 8 above. Accordingly, the above-identified application has been accorded "special" status.

Telephone inquires concerning this decision should be directed to Manjunath Rao at 571-272-0939.

The application is being forwarded to the Technology Center Art Unit 1614 for action on the merits commensurate with this decision.

/Manjunath Rao/

Manjunath Rao
Supervisory Patent Examiner &
POC for TC 1600 Green Tech Petitions
Technology Center 1600

Best Available Copy

UNITED STATES PATENT AND TRADEMARK OFFICE

UNITED STATES DEPARTMENT OF COMMERCE
United States Patent and Trademark Office
Address: COMMISSIONER FOR PATENTS
P.O. Box 1450
Alexandria, Virginia 22313-1450
www.uspto.gov

APPLICATION NO.	FILING DATE	FIRST NAMED INVENTOR	ATTORNEY DOCKET NO.	CONFIRMATION NO.
13/034,110	02/24/2011	Tetsuya SHIMIZU	Q122384	1156

7590 02/10/2012
SUGHRUE MION, PLLC
2100 PENNSYLVANIA AVENUE, N.W.
SUITE 800
WASHINGTON, DC 20037

EXAMINER
KEITH, JACK W

ART UNIT	PAPER NUMBER
3663	

NOTIFICATION DATE	DELIVERY MODE
02/10/2012	ELECTRONIC

DECISION GRANTING PETITION UNDER 37 CFR 1.138(d)

The declaration of express abandonment is recognized

This is in response to the petition under 37 CFR 1.138(d), requesting for a refund of any previously paid search fee and excess claims fee in the above-identified application.

The petition is granted.

The express abandonment is recognized. Any previously paid search fee and excess claims fee are hereby refunded.

Telephone inquiries should be directed to the Office of Data Management at (571) 272-4200.

Betty Powell

Patent Publication Branch
Office of Data Management

FORM PET651G (Rev. 08/07)

Doc Code: PET.GREEN
Document Description: Petition for Green Tech Pilot

PTO/SB/420 (11-10)
Approved for use through 01/31/2011. OMB 0651-0062
U.S. Patent and Trademark Office; U. S. DEPARTMENT OF COMMERCE
Under the Paperwork Reduction Act of 1995, no persons are required to respond to a collection of information unless it displays a valid OMB control number.

PETITION TO MAKE SPECIAL UNDER THE GREEN TECHNOLOGY PILOT PROGRAM

Attorney Docket Number: A0120.0002-00US	Application Number (if known): 13034119	Filing date: February 24, 2011
First Named Inventor: Zhenjiang LI		
Title: METHOD OF MAKING POLYLACTIC ACID USING CARBENE DERIVATIVES AS THE CATALYST		

APPLICANT HEREBY REQUESTS TO PARTICIPATE IN THE GREEN TECHNOLOGY PILOT PROGRAM FOR THE ABOVE-IDENTIFIED APPLICATION. See Instruction Sheet on page 2.

This petition must be timely filed electronically using the USPTO electronic filing system, EFS-Web.

1. By filing this petition:

   Applicant is requesting early publication: Applicant hereby requests early publication under 37 CFR 1.219 and the publication fee set forth in 37 CFR 1.18(d) accompanies this request.

2. By filing this petition: applicant is agreeing to make an election without traverse in a telephonic interview and elect an invention that meets the eligibility requirements for the Green Technology Pilot Program, if the Office determines that the claims are not obviously directed to a single invention. See Instruction Sheet.

3. This request is accompanied by statements of special status for the eligibility requirement.

4. The application contains no more than three (3) independent claims and twenty (20) total claims.

5. The application does not contain any multiple dependent claims.

6. Other attachments: _____

Signature /Allen Xue/	Date March 18, 2011
Name (Print/Typed) Allen (Zhi Yang) Xue	Registration Number 56,474

Note: *Signatures of all the inventors or assignees of record of the entire interest or their representative(s) are required in accordance with 37 CFR 1.33 and 11.18. Please see 37 CFR 1.4(d) for the form of the signature. If necessary, submit multiple forms for more than one signature see below*.*

☒ *Total of one forms are submitted.

The information is required to obtain or retain a benefit by the public which is to file (and by the USPTO to process) an application. Confidentiality is governed by 35 U.S.C. 122 and 37 CFR 1.11 and 1.14. This collection is estimated to take 12 hours to complete, including gathering, preparing, and submitting the completed application form to the USPTO. Time will vary depending upon the individual case. Any comments on the amount of time you require to complete this form and/or suggestions for reducing this burden, should be sent to the Chief Information Officer, U.S. Patent and Trademark Office, U.S. Department of Commerce, P.O. Box 1450, Alexandria, VA 22313-1450. DO NOT SEND FEES OR COMPLETED FORMS TO THIS ADDRESS. **SEND TO: Commissioner for Patents, P.O. Box 1450, Alexandria, VA 22313-1450.**

If you need assistance in completing the form, call 1-800-PTO-9199 and select option 2.

Under the Paperwork Reduction Act of 1995, no persons are required to respond to a collection of information unless it displays a valid OMB control number.

Instruction Sheet for Petition to Make Special Under the Green Technology Pilot Program

(Not to be Submitted to the USPTO)

The following is a summary of the requirements (for more information see the notices (i) "Pilot Program for Green Technologies Including Greenhouse Gas Reduction," (ii) "Elimination of Classification Requirement in the Green Technology Pilot Program," and (iii) "Expansion and Extension of the Green Technology Pilot Program," available on the USPTO web site at http://www.uspto.gov/patents/init_events/green_tech.jsp):

1) The application must be a non-reissue, non-provisional utility application filed under 35 U.S.C. 111 (a), or an international application that has entered the national stage in compliance with 35 U.S.C. 371, irrespective of the filing date of the application. Reexamination proceedings are excluded from this pilot program.

2) The application must contain three or fewer independent claims and twenty or fewer total claims. The application must not contain any multiple dependent claims. For an application that contains more than three independent claims or twenty total claims, or multiple dependent claims, applicant must file a preliminary amendment in compliance with 37 CFR 1.121 to cancel the excess claims and/or the multiple dependent claims at the time the petition to make special is filed.

3) The claims must be directed to a single invention that materially enhances the quality of the environment, or that materially contributes to: (1) the discovery or development of renewable energy resources; (2) the more efficient utilization and conservation of energy resources; or (3) green house gas emission reduction (see the eligibility requirements of sections II and III of the notice (i) cited above). The petition must include a statement that, if the USPTO determines that the claims are directed to multiple inventions (e.g., in a restriction requirement), applicant will agree to make an election without traverse in a telephonic interview, and elect an invention that meets the eligibility requirements in section II or III of the notice (i) cited above.

4) The petition to make special must be timely filed electronically using the USPTO electronic filing system, EFS-Web, and selecting the document description of "Petition for Green Tech Pilot" on the EFS-Web screen. Applicant should use form PTO/SB/420, which is available as a Portable Document Format (PDF) fillable form in EFS-Web and on the USPTO Web site.

5) The petition to make special must be filed at least one day prior to the date that a first Office action (which may be an Office action containing only a restriction requirement) appears in the Patent Application Information Retrieval (PAIR) system. Applicant may check the status of the application using PAIR.

6) The petition to make special must be accompanied by a request for early publication in compliance with 37 CFR 1.219 and the publication fee set forth in 37 CFR 1.18(d).

Privacy Act Statement

The **Privacy Act of 1974 (P.L. 93-579)** requires that you be given certain information in connection with your submission of the attached form related to a patent application or patent. Accordingly, pursuant to the requirements of the Act, please be advised that: (1) the general authority for the collection of this information is 35 U.S.C. 2(b)(2); (2) furnishing of the information solicited is voluntary; and (3) the principal purpose for which the information is used by the U.S. Patent and Trademark Office is to process and/or examine your submission related to a patent application or patent. If you do not furnish the requested information, the U.S. Patent and Trademark Office may not be able to process and/or examine your submission, which may result in termination of proceedings or abandonment of the application or expiration of the patent.

The information provided by you in this form will be subject to the following routine uses:

1. The information on this form will be treated confidentially to the extent allowed under the Freedom of Information Act (5 U.S.C. 552) and the Privacy Act (5 U.S.C 552a). Records from this system of records may be disclosed to the Department of Justice to determine whether disclosure of these records is required by the Freedom of Information Act.
2. A record from this system of records may be disclosed, as a routine use, in the course of presenting evidence to a court, magistrate, or administrative tribunal, including disclosures to opposing counsel in the course of settlement negotiations.
3. A record in this system of records may be disclosed, as a routine use, to a Member of Congress submitting a request involving an individual, to whom the record pertains, when the individual has requested assistance from the Member with respect to the subject matter of the record.
4. A record in this system of records may be disclosed, as a routine use, to a contractor of the Agency having need for the information in order to perform a contract. Recipients of information shall be required to comply with the requirements of the Privacy Act of 1974, as amended, pursuant to 5 U.S.C. 552a(m).
5. A record related to an International Application filed under the Patent Cooperation Treaty in this system of records may be disclosed, as a routine use, to the International Bureau of the World Intellectual Property Organization, pursuant to the Patent Cooperation Treaty.
6. A record in this system of records may be disclosed, as a routine use, to another federal agency for purposes of National Security review (35 U.S.C. 181) and for review pursuant to the Atomic Energy Act (42 U.S.C. 218(c)).
7. A record from this system of records may be disclosed, as a routine use, to the Administrator, General Services, or his/her designee, during an inspection of records conducted by GSA as part of that agency's responsibility to recommend improvements in records management practices and programs, under authority of 44 U.S.C. 2904 and 2906. Such disclosure shall be made in accordance with the GSA regulations governing inspection of records for this purpose, and any other relevant (*i.e.*, GSA or Commerce) directive. Such disclosure shall not be used to make determinations about individuals.
8. A record from this system of records may be disclosed, as a routine use, to the public after either publication of the application pursuant to 35 U.S.C. 122(b) or issuance of a patent pursuant to 35 U.S.C. 151. Further, a record may be disclosed, subject to the limitations of 37 CFR 1.14, as a routine use, to the public if the record was filed in an application which became abandoned or in which the proceedings were terminated and which application is referenced by either a published application, an application open to public inspection or an issued patent.
9. A record from this system of records may be disclosed, as a routine use, to a Federal, State, or local law enforcement agency, if the USPTO becomes aware of a violation or potential violation of law or regulation.

PATENT
Attorney Docket No. A0120.0002-00US

IN THE UNITED STATES PATENT AND TRADEMARK OFFICE

In re Application of: Zhenjiang LI et al.	)	Group Art Unit: Not yet assigned
Application No.: 13/034,119	)	Examiner: Not yet assigned
Filed: February 24, 20011	)	Confirmation No.: 1174
For: METHOD OF MAKING POLYLACTIC ACID USING CARBENE DERIVATIVES AS THE CATALYST	)	***VIA EFS WEB***

Commissioner for Patents
P.O. Box 1450
Alexandria, VA 22313-1450

Petition to Make Special Under MPEP § 708.02
- Accelerated Examination under the Pilot Program for Green Technologies

Sir:

Applicants hereby request that Application Serial No. 13/034,119 be advanced out of order under 37 CFR § 1.102 as it pertains to enhancing the quality of the environment. In particular, the claimed invention relates to a new method of making polylactic acid. Polylactic acid is a type of biodegradable polymer that can be used for making biodegradable plastic goods, such as plastic bags and utensils. Consequently, the claimed invention benefits the environment by reducing plastic pollution. Furthermore, polylactic acid is traditionally made via ring-opening polymerization of lactide catalyzed by tin-containing compounds. The tin-containing catalyst is toxic. The claimed invention avoids using tin-containing compounds in making polylactic acid. Therefore, the method disclosed and claimed in the present application as well as the end product of the claimed invention materially improves the quality of the environment.

For at least reasons set forth above, Applicants respectfully request the petition be granted.

Respectfully submitted,

Anova Law Group, PLLC

Dated: March 18, 2011

By: /Allen Xue/
Allen (Zhi Yang) Xue
Reg. No. 56,474

UNITED STATES PATENT AND TRADEMARK OFFICE

UNITED STATES DEPARTMENT OF COMMERCE
United States Patent and Trademark Office
Address: COMMISSIONER FOR PATENTS
P.O. Box 1450
Alexandria, Virginia 22313-1450
www.uspto.gov

APPLICATION NO.	FILING DATE	FIRST NAMED INVENTOR	ATTORNEY DOCKET NO.	CONFIRMATION NO.
13/034,119	02/24/2011	Zhenjiang Li	A0120.0002-00US	1174

95483 7590 05/03/2011
Anova Law Group, PLLC
8230 Boone Blvd, Suite 347
Vienna, VA 22182

EXAMINER
KAHN, RACHEL

ART UNIT	PAPER NUMBER
1766	

NOTIFICATION DATE	DELIVERY MODE
05/03/2011	ELECTRONIC

Please find below and/or attached an Office communication concerning this application or proceeding.

The time period for reply, if any, is set in the attached communication.

Notice of the Office communication was sent electronically on above-indicated "Notification Date" to the following e-mail address(es):

contact@anovalaw.com
zhiyangxue@gmail.com
wenyetan@gmail.com

UNITED STATES PATENT AND TRADEMARK OFFICE

Commissioner for Patents
United States Patent and Trademark Office
P.O. Box 1450
Alexandria, VA 22313-1450
www.uspto.gov

Anova Law Group, PLLC
8230 Boone Blvd, Suite 347
Vienna VA 22182

5/3/11

In re Application of	:	
Li et al.	:	DECISION ON PETITION
Application No. 13/034,119	:	TO MAKE SPECIAL UNDER
Filed: 2/24/2011	:	THE GREEN TECHNOLOGY
Attorney Docket No. **A0120.0002-00US**	:	PILOT PROGRAM

This is a decision on the petition under 37 CFR 1.102, filed 3/18/2011, to make the above-identified application special under the pilot program for applications pertaining to Green Technologies as set forth in 74 Federal Register Notice 64666 (December 8, 2009) and amended by 75 Federal Register Notice 28554 (May 21, 2010) and 75 Federal Register Notice 69049 (November 10, 2010).

The petition is **DISMISSED**.

If reconsideration of this decision is desired, a petition for reconsideration must be filed within ONE (1) MONTH OR THIRTY (30) DAYS from the mail date of this decision, whichever is longer. No extension of this time limit can be granted under 37 CFR 1.136(a) or (b). The petition for reconsideration should include an exhaustive attempt to provide the lacking item(s) noted below, since, after a decision on the petition for reconsideration, no further reconsideration or review of the matter will be undertaken by the Director.

A grantable petition to make an application special under 37 CFR 1.102 and the pilot program as set forth in 74 FR 64666 must be directed to a nonprovisional application filed under 35 USC 111(a) or be a national stage entry under 35 USC 371, exclusive of any reissue applications.

In order to qualify for special status, the following requirements must be met. 1) The application must have no more than 3 independent claims and no more than 20 total claims. 2) The application must not contain any multiple dependent claims. 3) The petition must state the basis for seeking special status, i.e., the claimed invention either: A) materially enhances the quality of the environment or B) materially contributes to: i) the discovery or development of renewable energy resources, ii) the more efficient utilization and conservation of energy resources, or iii) greenhouse gas emission reduction. 4) If the disclosure is not clear on its face that the claimed invention materially contributes under category (A) or (B), the petition must be accompanied by a statement by the applicant, assignee, or an attorney/agent registered to practice before the

Office explaining how the materiality standard is met. 5) A statement that applicant will agree to make an election without traverse in a telephonic interview if a restriction requirement is made by the examiner. 6) The petition to make special must be filed electronically. 7) The petition must be filed at least one day prior to the date that a first Office Action appears in the Patent Application Information Retrieval (PAIR) system. 8) The petition must be accompanied by a request for early publication in compliance with 37 CFR 1.219 and include the publication fee as set forth in 37 CFR 1.18(d).

The requirement for a fee for consideration of the petition to make special for applications pertaining to Green Technologies has been waived.

The petition lacks item(s) 4.

In regard to item 4, petitioner should note that the instant petition includes a statement identifying the basis for the special status (i.e., whether the instant invention (1) materially enhances the quality of the environment or materially contributes to (2) development of renewable energy resources or energy conservation, or (3) greenhouse gas reduction) as required by sections II and III of the notice. However, as stated in the notice, applicant must also provide a statement pertaining to the materiality standard if the application disclosure is not clear on its face as to the materiality of the basis for the special status of the invention. It is not agreed that the application on its face meets that materiality standard.

Applicants argue that the instant invention relates to the production of polylactic acid. It is also stated that polylactic acid can be used for making biodegradable plastic goods, such as plastic bags and utensils. The materiality standard does not permit an applicant to speculate how an end user might specifically apply the invention in a manner that could materially contribute to (1) materially enhancing the quality of the environment or materially contributing to (2) development of renewable energy resources or energy conservation, or (3) greenhouse gas reduction.

Any reconsideration of this decision should be submitted through the USPTO electronic filing system, EFS-Web, and selecting the document description of "Petition for Green Tech Pilot" on the EFS-Web screen.

Telephone inquiries concerning this decision should be directed to Tom Dunn at 571-272-1171.

The application is being forwarded to the Technology Center Art Unit Art Unit Number for action in its regular turn.

/Tom Dunn/

Tom Dunn
Quality Assurance Specialist
Technology Center 1700

Doc Code: PET.GREEN
Document Description: Petition for Green Tech Pilot

PTO/SB/420 (11-10)
Approved for use through 01/31/2011. OMB 0651-0062
U.S. Patent and Trademark Office; U. S. DEPARTMENT OF COMMERCE
Under the Paperwork Reduction Act of 1995, no persons are required to respond to a collection of information unless it displays a valid OMB control number.

PETITION TO MAKE SPECIAL UNDER THE GREEN TECHNOLOGY PILOT PROGRAM

Attorney Docket Number: JAS-6	Application Number (if known): Unknown	Filing date: February 24, 2011
First Named Inventor: John A. Saavedra		
Title: APPARATUS AND METHOD FOR ELECTRICAL POWER GENERATION FROM LOW-HEAD LOW-FLOW WATER SOURCES		

APPLICANT HEREBY REQUESTS TO PARTICIPATE IN THE GREEN TECHNOLOGY PILOT PROGRAM FOR THE ABOVE-IDENTIFIED APPLICATION. See Instruction Sheet on page 2.

This petition must be timely filed electronically using the USPTO electronic filing system, EFS-Web.

1. By filing this petition:

   Applicant is requesting early publication: Applicant hereby requests early publication under 37 CFR 1.219 and the publication fee set forth in 37 CFR 1.18(d) accompanies this request.

2. By filing this petition: applicant is agreeing to make an election without traverse in a telephonic interview and elect an invention that meets the eligibility requirements for the Green Technology Pilot Program, if the Office determines that the claims are not obviously directed to a single invention. See Instruction Sheet.

3. This request is accompanied by statements of special status for the eligibility requirement.

4. The application contains no more than three (3) independent claims and twenty (20) total claims.

5. The application does not contain any multiple dependent claims.

6. Other attachments: _____

Signature	Date 2/24/2011
Name (Print/Typed) J. Parks Workman	Registration Number 60,382

Note: Signatures of all the inventors or assignees of record of the entire interest or their representative(s) are required in accordance with 37 CFR 1.33 and 11.18. Please see 37 CFR 1.4(d) for the form of the signature. If necessary, submit multiple forms for more than one signature see below.*

[X] *Total of 1 forms are submitted.

The information is required to obtain or retain a benefit by the public which is to file (and by the USPTO to process) an application. Confidentiality is governed by 35 U.S.C. 122 and 37 CFR 1.11 and 1.14. This collection is estimated to take 12 hours to complete, including gathering, preparing, and submitting the completed application form to the USPTO. Time will vary depending upon the individual case. Any comments on the amount of time you require to complete this form and/or suggestions for reducing this burden, should be sent to the Chief Information Officer, U.S. Patent and Trademark Office, U.S. Department of Commerce, P.O. Box 1450, Alexandria, VA 22313-1450. DO NOT SEND FEES OR COMPLETED FORMS TO THIS ADDRESS. SEND TO: **Commissioner for Patents, P.O. Box 1450, Alexandria, VA 22313-1450.**

If you need assistance in completing the form, call 1-800-PTO-9199 and select option 2.

UNITED STATES PATENT AND TRADEMARK OFFICE

UNITED STATES DEPARTMENT OF COMMERCE
United States Patent and Trademark Office
Address: COMMISSIONER FOR PATENTS
P.O. Box 1450
Alexandria, Virginia 22313-1450
www.uspto.gov

APPLICATION NO.	FILING DATE	FIRST NAMED INVENTOR	ATTORNEY DOCKET NO.	CONFIRMATION NO.
13/034,132	02/24/2011	John A. Saavedra	JAS-6	1210

22827 7590 03/18/2011
DORITY & MANNING, P.A.
POST OFFICE BOX 1449
GREENVILLE, SC 29602-1449

EXAMINER

ART UNIT	PAPER NUMBER
3751	

MAIL DATE	DELIVERY MODE
03/18/2011	PAPER

Please find below and/or attached an Office communication concerning this application or proceeding.

The time period for reply, if any, is set in the attached communication.

UNITED STATES PATENT AND TRADEMARK OFFICE

Commissioner for Patents
United States Patent and Trademark Office
P.O. Box 1450
Alexandria, VA 22313-1450
www.uspto.gov

DORITY & MANNING, P.A.
POST OFFICE BOX 1449
GREENVILLE SC 29602-1449

In re Application of	:	
SAAVEDRA, JOHN A.	:	DECISION ON PETITION
Application No. 13/034,132	:	TO MAKE SPECIAL UNDER
Filed: Feb. 24, 2011	:	THE GREEN TECHNOLOGY
Attorney Docket No. JAS-6	:	PILOT PROGRAM

This is a decision on the petition under 37 CFR 1.102, filed Feb. 24, 2011, to make the above-identified application special under the pilot program for applications pertaining to Green Technologies as set forth in 74 Federal Register Notice 64666 (December 8, 2009) and amended by 75 Federal Register Notice 28554 (May 21, 2010) and 75 Federal Register Notice 69049 (November 10, 2010).

The petition is **granted**.

A grantable petition to make an application special under 37 CFR 1.102 and the pilot program as set forth in 74 FR 64666 must be directed to a nonprovisional application filed under 35 USC 111(a) or be a national stage entry under 35 USC 371, exclusive of any reissue applications.

In order to qualify for special status, the following requirements must be met. 1) The application must have no more than 3 independent claims and no more than 20 total claims. 2) The application must not contain any multiple dependent claims. 3) The petition must state the basis for seeking special status, i.e., the claimed invention either: A) materially enhances the quality of the environment or B) materially contributes to: i) the discovery or development of renewable energy resources, ii) the more efficient utilization and conservation of energy resources, or iii) greenhouse gas emission reduction. 4) If the disclosure is not clear on its face that the claimed invention materially contributes under category (A) or (B), the petition must be accompanied by a statement by the applicant, assignee, or an attorney/agent registered to practice before the Office explaining how the materiality standard is met. 5) A statement that applicant will agree to make an election without traverse in a telephonic interview if a restriction requirement is made by the examiner. 6) The petition to make special must be filed electronically. 7) The petition must be filed at least one day prior to the date that a first Office Action appears in the Patent Application Information Retrieval (PAIR) system. 8) The petition must be accompanied by a

request for early publication in compliance with 37 CFR 1.219 and include the publication fee as set forth in 37 CFR 1.18(d).

The requirement for a fee for consideration of the petition to make special for applications pertaining to Green Technologies has been waived.

The instant petition complies with items 1 – 8 above. Accordingly, the above-identified application has been accorded "special" status.

Telephone inquires concerning this decision should be directed to Henry C. Yuen at 571-272-4856.

This application is currently undergoing pre-examination processing. Upon completion, the application will be forwarded to the Technology Center Art Unit 3751 for action on the merits commensurate with this decision.

/Henry C. Yuen/

Henry C. Yuen
Quality Assurance Specialist
Technology Center TC 3700

UNITED STATES PATENT AND TRADEMARK OFFICE

Commissioner for Patents
United States Patent and Trademark Office
P.O. Box 1450
Alexandria, VA 22313-1450
www.uspto.gov

SQUIRE SANDERS (US) LLP
8000 TOWERS CRESCENT DRIVE
14TH FLOOR
VIENNA VA 22182-6212

MAILED
FEB 10 2012
OFFICE OF PETITIONS

Applicant: Motoyuki Tanisho et al
Appl. No.: 13/034,135
Filing Date: February 24, 2011
Attorney Docket: 107477.00002
Pub. No.: US20110231810 A1
Pub. Date: September 22, 2011

This is a decision on the request for a corrected patent application publication under 37 CFR 1.221(b), received on November 22, 2011 for the above-identified application.

The request is DISMISSED.

Applicant requests that the application be republished because the patent application publication contains a material error on the front page of the application.

37 CFR 1.221 (b) is applicable "only when the Office makes a material mistake which is apparent from Office records.... Any request for a corrected publication or revised patent application publication other than provided as provided in paragraph (a) of this section must be filed within two months from the date of the patent application publication. This period is not extendable." A material mistake must affect the public's ability to appreciate the technical disclosure of the patent application publication, to determine the scope of the patent application publication, or to determine the scope of the provisional rights that an applicant may seek to enforce upon issuance of a patent. [1]

The error noted by requestor on the front page of the publication in the title of the invention is not a material Office error under 37 CFR 1.221(b). The mistake does not affect the public's ability to appreciate the technical disclosure of the patent application publication, or determine the scope of the patent application publication or determine the scope of the provisional rights that an applicant may seek to enforce upon issuance of a patent.

[1] Changes to Implement Eighteen-Month Publication of Patent Applications, 65 FR 57023, 57038 (Sept. 20, 2000), 1239, Off. Gaz. Pat. Office Notices 63, 75 (Oct. 10, 2000) (final rule).

The Request for Corrected Filing Receipts on March 25, 2011 and on September 23, 2011, will be decided separately.

The applicant is advised that a "request for republication of an application previously published" may be filed under 37 CFR 1.221 (a). Such a request for republication "must include a copy of the application compliance with the Office's electronic filing system requirements and be accompanied by the publication fee set forth in § 1.18 (d) and the processing fee set forth in § 1.17 (i)." If the request for republication does not comply with the electronic filing system requirements, the republication will not take place and the publication fee set forth in § 1.18 (d) will be refunded. The processing fee will be retained.

A guide for filing a request for a Pre-Grant Publication, such as a request for republication, may be found on the link below:

http://www.uspto.gov/patents/process/file/efs/guidance/index.jsp

http://www.uspto.gov/ebc/portal/efs/pgpub_quickstart.pdf

Any request for republication under 37 CFR 1.221(a), must be submitted via the EFS system, as a "Pre-Grant Publication".

Inquiries relating to this matter may be directed to Karen Creasy at (571) 272-3208.

/Christopher Bottorff/

Christopher Bottorff
Petitions Examiner
Office of Petitions

Doc Code: PET.GREEN
Document Description: Petition for Green Tech Pilot

PTO/SB/420 (11-10)
Approved for use through 01/31/2011. OMB 0651-0062
U.S. Patent and Trademark Office; U. S. DEPARTMENT OF COMMERCE
Under the Paperwork Reduction Act of 1995, no persons are required to respond to a collection of information unless it displays a valid OMB control number.

PETITION TO MAKE SPECIAL UNDER THE GREEN TECHNOLOGY PILOT PROGRAM

Attorney Docket Number: 4098.1005-003	Application Number (if known): 13/034,191	Filing date: February 24, 2011
First Named Inventor: RONALD P. MILLMAN, JR.		
Title: METHOD AND APPARATUS FOR PROCESSING SUBSTRATE EDGES		

APPLICANT HEREBY REQUESTS TO PARTICIPATE IN THE GREEN TECHNOLOGY PILOT PROGRAM FOR THE ABOVE-IDENTIFIED APPLICATION. See Instruction Sheet on page 2.

This petition must be timely filed electronically using the USPTO electronic filing system, EFS-Web.

1. By filing this petition:

   Applicant is requesting early publication: Applicant hereby requests early publication under 37 CFR 1.219 and the publication fee set forth in 37 CFR 1.18(d) accompanies this request.

2. By filing this petition: applicant is agreeing to make an election without traverse in a telephonic interview and elect an invention that meets the eligibility requirements for the Green Technology Pilot Program, if the Office determines that the claims are not obviously directed to a single invention. See Instruction Sheet.

3. This request is accompanied by statements of special status for the eligibility requirement.

4. The application contains no more than three (3) independent claims and twenty (20) total claims.

5. The application does not contain any multiple dependent claims.

6. Other attachments: Authorization to Charge Pub. Fee; Declaration of Special Status with Exhibits

Signature /David J. Thibodeau Jr. Reg No. 31671/	Date February 28, 2011
Name (Print/Typed) David J. Thibodeau, Jr.	Registration Number 31,671

Note: *Signatures of all the inventors or assignees of record of the entire interest or their representative(s) are required in accordance with 37 CFR 1.33 and 11.18. Please see 37 CFR 1.4(d) for the form of the signature. If necessary, submit multiple forms for more than one signature see below*.*

[X] *Total of 1 forms are submitted.

The information is required to obtain or retain a benefit by the public which is to file (and by the USPTO to process) an application. Confidentiality is governed by 35 U.S.C. 122 and 37 CFR 1.11 and 1.14. This collection is estimated to take 12 hours to complete, including gathering, preparing, and submitting the completed application form to the USPTO. Time will vary depending upon the individual case. Any comments on the amount of time you require to complete this form and/or suggestions for reducing this burden, should be sent to the Chief Information Officer, U.S. Patent and Trademark Office, U.S. Department of Commerce, P.O. Box 1450, Alexandria, VA 22313-1450. DO NOT SEND FEES OR COMPLETED FORMS TO THIS ADDRESS. **SEND TO: Commissioner for Patents, P.O. Box 1450, Alexandria, VA 22313-1450.**

If you need assistance in completing the form, call 1-800-PTO-9199 and select option 2.

UNITED STATES PATENT AND TRADEMARK OFFICE

UNITED STATES DEPARTMENT OF COMMERCE
United States Patent and Trademark Office
Address: COMMISSIONER FOR PATENTS
P.O. Box 1450
Alexandria, Virginia 22313-1450
www.uspto.gov

APPLICATION NO.	FILING DATE	FIRST NAMED INVENTOR	ATTORNEY DOCKET NO.	CONFIRMATION NO.
13/034,191	02/24/2011	Ronald P. Millman JR.	4098.1005-003	1317

21005 7590 03/28/2011
HAMILTON, BROOK, SMITH & REYNOLDS, P.C.
530 VIRGINIA ROAD
P.O. BOX 9133
CONCORD, MA 01742-9133

EXAMINER

ART UNIT	PAPER NUMBER
1721	

MAIL DATE	DELIVERY MODE
03/28/2011	PAPER

Please find below and/or attached an Office communication concerning this application or proceeding.

The time period for reply, if any, is set in the attached communication.

UNITED STATES PATENT AND TRADEMARK OFFICE

Commissioner for Patents
United States Patent and Trademark Office
P.O. Box 1450
Alexandria, VA 22313-1450
www.uspto.gov

HAMILTON, BROOK, SMITH & REYNOLDS, P.C.
530 VIRGINIA ROAD
P.O. BOX 9133
CONCORD MA 01742-9133

3/28/2011

In re Application of	:	
Millman et al.	:	DECISION ON PETITION
Application No. 13/034,191	:	TO MAKE SPECIAL UNDER
Filed: 2/24/2011	:	THE GREEN TECHNOLOGY
Attorney Docket No. **4098.1005-003**	:	PILOT PROGRAM

This is a decision on the petition under 37 CFR 1.102, filed 2/28/2011, to make the above-identified application special under the pilot program for applications pertaining to Green Technologies as set forth in 74 Federal Register Notice 64666 (December 8, 2009) and amended by 75 Federal Register Notice 28554 (May 21, 2010) and 75 Federal Register Notice 69049 (November 10, 2010).

The petition is **GRANTED**.

A grantable petition to make an application special under 37 CFR 1.102 and the pilot program as set forth in 74 FR 64666 must be directed to a nonprovisional application filed under 35 USC 111(a) or be a national stage entry under 35 USC 371, exclusive of any reissue applications.

In order to qualify for special status, the following requirements must be met. 1) The application must have no more than 3 independent claims and no more than 20 total claims. 2) The application must not contain any multiple dependent claims. 3) The petition must state the basis for seeking special status, i.e., the claimed invention either: A) materially enhances the quality of the environment or B) materially contributes to: i) the discovery or development of renewable energy resources, ii) the more efficient utilization and conservation of energy resources, or iii) greenhouse gas emission reduction. 4) If the disclosure is not clear on its face that the claimed invention materially contributes under category (A) or (B), the petition must be accompanied by a statement by the applicant, assignee, or an attorney/agent registered to practice before the Office explaining how the materiality standard is met. 5) A statement that applicant will agree to make an election without traverse in a telephonic interview if a restriction requirement is made by the examiner. 6) The petition to make special must be filed electronically. 7) The petition must be filed at least one day prior to the date that a first Office Action appears in the Patent Application Information Retrieval (PAIR) system. 8) The petition must be accompanied by a

request for early publication in compliance with 37 CFR 1.219 and include the publication fee as set forth in 37 CFR 1.18(d).

The requirement for a fee for consideration of the petition to make special for applications pertaining to Green Technologies has been waived.

The instant petition complies with items 1 – 8 above. Accordingly, the above-identified application has been accorded "special" status.

Telephone inquires concerning this decision should be directed to Tom Dunn at 571-272-1171.

The application is being forwarded to the Technology Center Art Unit 1721 for action on the merits commensurate with this decision.

/Tom Dunn/

Tom Dunn
Quality Assurance Specialist
Technology Center 1700

Doc Code: PET.GREEN
Document Description: Petition for Green Tech Pilot

PTO/SB/420 (11-10)
Approved for use through 01/31/2011. OMB 0651-0062
U.S. Patent and Trademark Office; U. S. DEPARTMENT OF COMMERCE
Under the Paperwork Reduction Act of 1995, no persons are required to respond to a collection of information unless it displays a valid OMB control number.

PETITION TO MAKE SPECIAL UNDER THE GREEN TECHNOLOGY PILOT PROGRAM

Attorney Docket Number: 4098.1006-001	Application Number (if known): 13/034,202	Filing date: February 24, 2011
First Named Inventor: RONALD P. MILLMAN, JR.		
Title: FIBER-OPTIC BEAM DELIVERY SYSTEM FOR WAFER EDGE PROCESSING		

APPLICANT HEREBY REQUESTS TO PARTICIPATE IN THE GREEN TECHNOLOGY PILOT PROGRAM FOR THE ABOVE-IDENTIFIED APPLICATION. See Instruction Sheet on page 2.

This petition must be timely filed electronically using the USPTO electronic filing system, EFS-Web.

1. By filing this petition:

   Applicant is requesting early publication: Applicant hereby requests early publication under 37 CFR 1.219 and the publication fee set forth in 37 CFR 1.18(d) accompanies this request.

2. By filing this petition: applicant is agreeing to make an election without traverse in a telephonic interview and elect an invention that meets the eligibility requirements for the Green Technology Pilot Program, if the Office determines that the claims are not obviously directed to a single invention. See Instruction Sheet.

3. This request is accompanied by statements of special status for the eligibility requirement.

4. The application contains no more than three (3) independent claims and twenty (20) total claims.

5. The application does not contain any multiple dependent claims.

6. Other attachments: Authorization to Charge Pub. Fee; Declaration of Special Status with Exhibits

Signature /David J. Thibodeau Jr. Reg. No. 31671/	Date February 28, 2011
Name (Print/Typed) David J. Thibodeau, Jr.	Registration Number 31,671

Note: *Signatures of all the inventors or assignees of record of the entire interest or their representative(s) are required in accordance with 37 CFR 1.33 and 11.18. Please see 37 CFR 1.4(d) for the form of the signature. If necessary, submit multiple forms for more than one signature see below*.*

[X] *Total of 1 forms are submitted.

The information is required to obtain or retain a benefit by the public which is to file (and by the USPTO to process) an application. Confidentiality is governed by 35 U.S.C. 122 and 37 CFR 1.11 and 1.14. This collection is estimated to take 12 hours to complete, including gathering, preparing, and submitting the completed application form to the USPTO. Time will vary depending upon the individual case. Any comments on the amount of time you require to complete this form and/or suggestions for reducing this burden, should be sent to the Chief Information Officer, U.S. Patent and Trademark Office, U.S. Department of Commerce, P.O. Box 1450, Alexandria, VA 22313-1450. DO NOT SEND FEES OR COMPLETED FORMS TO THIS ADDRESS. **SEND TO: Commissioner for Patents, P.O. Box 1450, Alexandria, VA 22313-1450.**

If you need assistance in completing the form, call 1-800-PTO-9199 and select option 2.

UNITED STATES PATENT AND TRADEMARK OFFICE

UNITED STATES DEPARTMENT OF COMMERCE
United States Patent and Trademark Office
Address: COMMISSIONER FOR PATENTS
P.O. Box 1450
Alexandria, Virginia 22313-1450
www.uspto.gov

APPLICATION NO.	FILING DATE	FIRST NAMED INVENTOR	ATTORNEY DOCKET NO.	CONFIRMATION NO.
13/034,202	02/24/2011	Ronald P. Millman JR.	4098.1006-001	1338

21005 7590 03/28/2011
HAMILTON, BROOK, SMITH & REYNOLDS, P.C.
530 VIRGINIA ROAD
P.O. BOX 9133
CONCORD, MA 01742-9133

EXAMINER

ART UNIT	PAPER NUMBER
1721	

MAIL DATE	DELIVERY MODE
03/28/2011	PAPER

Please find below and/or attached an Office communication concerning this application or proceeding.

The time period for reply, if any, is set in the attached communication.

UNITED STATES PATENT AND TRADEMARK OFFICE

Commissioner for Patents
United States Patent and Trademark Office
P.O. Box 1450
Alexandria, VA 22313-1450
www.uspto.gov

HAMILTON, BROOK, SMITH & REYNOLDS, P.C.
530 VIRGINIA ROAD
P.O. BOX 9133
CONCORD MA 01742-9133

3/28/2011

In re Application of	:	
Millman et al.	:	DECISION ON PETITION
Application No. 13/034,202	:	TO MAKE SPECIAL UNDER
Filed: 2/24/2011	:	THE GREEN TECHNOLOGY
Attorney Docket No. **4098.1006-001**	:	PILOT PROGRAM

This is a decision on the petition under 37 CFR 1.102, filed 2/28/2011, to make the above-identified application special under the pilot program for applications pertaining to Green Technologies as set forth in 74 Federal Register Notice 64666 (December 8, 2009) and amended by 75 Federal Register Notice 28554 (May 21, 2010) and 75 Federal Register Notice 69049 (November 10, 2010).

The petition is **GRANTED**.

A grantable petition to make an application special under 37 CFR 1.102 and the pilot program as set forth in 74 FR 64666 must be directed to a nonprovisional application filed under 35 USC 111(a) or be a national stage entry under 35 USC 371, exclusive of any reissue applications.

In order to qualify for special status, the following requirements must be met. 1) The application must have no more than 3 independent claims and no more than 20 total claims. 2) The application must not contain any multiple dependent claims. 3) The petition must state the basis for seeking special status, i.e., the claimed invention either: A) materially enhances the quality of the environment or B) materially contributes to: i) the discovery or development of renewable energy resources, ii) the more efficient utilization and conservation of energy resources, or iii) greenhouse gas emission reduction. 4) If the disclosure is not clear on its face that the claimed invention materially contributes under category (A) or (B), the petition must be accompanied by a statement by the applicant, assignee, or an attorney/agent registered to practice before the Office explaining how the materiality standard is met. 5) A statement that applicant will agree to make an election without traverse in a telephonic interview if a restriction requirement is made by the examiner. 6) The petition to make special must be filed electronically. 7) The petition must be filed at least one day prior to the date that a first Office Action appears in the Patent Application Information Retrieval (PAIR) system. 8) The petition must be accompanied by a

request for early publication in compliance with 37 CFR 1.219 and include the publication fee as set forth in 37 CFR 1.18(d).

The requirement for a fee for consideration of the petition to make special for applications pertaining to Green Technologies has been waived.

The instant petition complies with items 1 – 8 above. Accordingly, the above-identified application has been accorded "special" status.

Telephone inquires concerning this decision should be directed to Tom Dunn at 571-272-1171.

The application is being forwarded to the Technology Center Art Unit 1721 for action on the merits commensurate with this decision.

/Tom Dunn/

Tom Dunn
Quality Assurance Specialist
Technology Center 1700

Doc Code: PET.GREEN
Document Description: Petition for Green Tech Pilot

PTO/SB/420 (11-10)
Approved for use through 01/31/2011. OMB 0651-0062
U.S. Patent and Trademark Office; U. S. DEPARTMENT OF COMMERCE
Under the Paperwork Reduction Act of 1995, no persons are required to respond to a collection of information unless it displays a valid OMB control number.

PETITION TO MAKE SPECIAL UNDER THE GREEN TECHNOLOGY PILOT PROGRAM

Attorney Docket Number: 4098.1007-000	Application Number (if known): 13/034,247	Filing date: February 24, 2011
First Named Inventor: KENNETH J. HARTE		
Title: ORTHOGONAL BEAM DELIVERY SYSTEM FOR WAFER EDGE PROCESSING		

APPLICANT HEREBY REQUESTS TO PARTICIPATE IN THE GREEN TECHNOLOGY PILOT PROGRAM FOR THE ABOVE-IDENTIFIED APPLICATION. See Instruction Sheet on page 2.

This petition must be timely filed electronically using the USPTO electronic filing system, EFS-Web.

1. By filing this petition:

   Applicant is requesting early publication: Applicant hereby requests early publication under 37 CFR 1.219 and the publication fee set forth in 37 CFR 1.18(d) accompanies this request.

2. By filing this petition: applicant is agreeing to make an election without traverse in a telephonic interview and elect an invention that meets the eligibility requirements for the Green Technology Pilot Program, if the Office determines that the claims are not obviously directed to a single invention. See Instruction Sheet.

3. This request is accompanied by statements of special status for the eligibility requirement.

4. The application contains no more than three (3) independent claims and twenty (20) total claims.

5. The application does not contain any multiple dependent claims.

6. Other attachments: Authorization to Charge Pub. Fee; Declaration of Special Status with Exhibits

Signature /David J. Thibodeau Jr. Reg. No. 31671/	Date February 28, 2011
Name (Print/Typed) David J. Thibodeau, Jr.	Registration Number 31,671

Note: *Signatures of all the inventors or assignees of record of the entire interest or their representative(s) are required in accordance with 37 CFR 1.33 and 11.18. Please see 37 CFR 1.4(d) for the form of the signature. If necessary, submit multiple forms for more than one signature see below*.*

[X] *Total of 1 forms are submitted.

The information is required to obtain or retain a benefit by the public which is to file (and by the USPTO to process) an application. Confidentiality is governed by 35 U.S.C. 122 and 37 CFR 1.11 and 1.14. This collection is estimated to take 12 hours to complete, including gathering, preparing, and submitting the completed application form to the USPTO. Time will vary depending upon the individual case. Any comments on the amount of time you require to complete this form and/or suggestions for reducing this burden, should be sent to the Chief Information Officer, U.S. Patent and Trademark Office, U.S. Department of Commerce, P.O. Box 1450, Alexandria, VA 22313-1450. DO NOT SEND FEES OR COMPLETED FORMS TO THIS ADDRESS. **SEND TO: Commissioner for Patents, P.O. Box 1450, Alexandria, VA 22313-1450.**

If you need assistance in completing the form, call 1-800-PTO-9199 and select option 2.

UNITED STATES PATENT AND TRADEMARK OFFICE

UNITED STATES DEPARTMENT OF COMMERCE
United States Patent and Trademark Office
Address: COMMISSIONER FOR PATENTS
P.O. Box 1450
Alexandria, Virginia 22313-1450
www.uspto.gov

APPLICATION NO.	FILING DATE	FIRST NAMED INVENTOR	ATTORNEY DOCKET NO.	CONFIRMATION NO.
13/034,247	02/24/2011	Kenneth J. Harte	4098.1007-000	1417

21005 7590 03/29/2011
HAMILTON, BROOK, SMITH & REYNOLDS, P.C.
530 VIRGINIA ROAD
P.O. BOX 9133
CONCORD, MA 01742-9133

EXAMINER

ART UNIT	PAPER NUMBER
2812	

MAIL DATE	DELIVERY MODE
03/29/2011	PAPER

Please find below and/or attached an Office communication concerning this application or proceeding.

The time period for reply, if any, is set in the attached communication.

UNITED STATES PATENT AND TRADEMARK OFFICE

Commissioner for Patents
United States Patent and Trademark Office
P.O. Box 1450
Alexandria, VA 22313-1450
www.uspto.gov

HAMILTON, BROOK, SMITH & REYNOLDS, P.C.
530 VIRGINIA ROAD
P.O. BOX 9133
CONCORD MA 01742-9133

In re Application of	:	
HARTE et al.	:	DECISION ON PETITION
Application No. 13/034,247	:	TO MAKE SPECIAL UNDER
Filed: February 24, 2011	:	THE GREEN TECHNOLOGY
Attorney Docket No. 4098.1007-000	:	PILOT PROGRAM

This is a decision on the petition under 37 CFR 1.102, filed on February 28, 2011, to make the above-identified application special under the pilot program for applications pertaining to Green Technologies as set forth 74 Federal Register Notice 64666 (December 8, 2009) and amended by 75 Federal Register Notice 28554 (May 21, 2010) and 75 Federal Register Notice 69049 (November 10, 2010).

The petition is **GRANTED**.

A grantable petition to make an application special under 37 CFR 1.102 and the pilot program as set forth in 74 FR 64666 must be directed to a nonprovisional application filed under 35 USC 111(a) or be a national stage entry under 35 USC 371, exclusive of any reissue applications.

In order to qualify for special status, the following requirements must be met. 1) The application must have no more than 3 independent claims and no more than 20 total claims. 2) The application must not contain any multiple dependent claims. 3) The petition must state the basis for seeking special status, i.e., the claimed invention either: A) materially enhances the quality of the environment or B) materially contributes to: i) the discovery or development of renewable energy resources, ii) the more efficient utilization and conservation of energy resources, or iii) greenhouse gas emission reduction. 4) If the disclosure is not clear on its face that the claimed invention materially contributes under category (A) or (B), the petition must be accompanied by a statement by the applicant, assignee, or an attorney/agent registered to practice before the Office explaining how the materiality standard is met. 5) A statement that applicant will agree to make an election without traverse in a telephonic interview if a restriction requirement is made by the examiner. 6) The petition to make special must be filed electronically. 7) The petition must be filed at least one day prior to the date that a first Office Action appears in the Patent Application Information Retrieval (PAIR) system. 8) The petition must be accompanied by a request for early publication in compliance with 37 CFR 1.219 and include the publication fee as set forth in 37 CFR 1.18(d).

The requirement for a fee for consideration of the petition to make special for applications pertaining to Green Technologies has been waived.

The instant petition complies with items 1 – 8 above. Accordingly, the above-identified application has been accorded "special" status.

Telephone inquires concerning this decision should be directed to Lee W. Young at 571-272-4549.

The application is being forwarded to the Technology Center Art Unit 2812 for action in its regular turn.

Lee W. Young
Quality Assurance Specialist
Technology Center 2800

UNITED STATES PATENT AND TRADEMARK OFFICE

UNITED STATES DEPARTMENT OF COMMERCE
United States Patent and Trademark Office
Address: COMMISSIONER FOR PATENTS
P.O. Box 1450
Alexandria, Virginia 22313-1450
www.uspto.gov

APPLICATION NO.	FILING DATE	FIRST NAMED INVENTOR	ATTORNEY DOCKET NO.	CONFIRMATION NO.
13/034,257	02/24/2011	Oleg V. Zaitsev	031185-00035	1433

38485 7590 04/15/2011
ARENT FOX LLP
1675 BROADWAY
NEW YORK, NY 10019

EXAMINER
MOAZZAMI, NASSER G

ART UNIT	PAPER NUMBER
2436	

NOTIFICATION DATE	DELIVERY MODE
04/15/2011	ELECTRONIC

Please find below and/or attached an Office communication concerning this application or proceeding.

The time period for reply, if any, is set in the attached communication.

Notice of the Office communication was sent electronically on above-indicated "Notification Date" to the following e-mail address(es):

NYIPDocket@arentfox.com
Patent_Mail@arentfox.com

UNITED STATES PATENT AND TRADEMARK OFFICE

COMMISSIONER FOR PATENTS
UNITED STATES PATENT AND TRADEMARK OFFICE
WASHINGTON, DC 20231
www.uspto.gov

Michael Fainberg
Arent Fox LLP
1675 Broadway
New York, NY 10019

In re Application of:
Zaitsev
Serial No.: 13/034257
Filed: February 24, 2011
Docket: 031185-00035
For: **Systems and Methods for Policy Based Program Configuration**

DECISION ON PETITION TO MAKE SPECIAL FOR NEW APPLICATION UNDER 37 C.F.R. § 1.102 & M.P.E.P. § 708.02

This is a decision on the petition filed on February 24, 2011 to make the above-identified application special for accelerated examination procedure under 37 C.F.R. § 1.102(d).

The petition to make the application special is **DISMISSED**.

REGULATION AND PRACTICE

A grantable petition to make special under 37 C.F.R. § 1.102(d) and pursuant to the "Change to Practice for Petitions in Patent Applications to Make Special and for Accelerated Examination" published in the Federal Register on June 26, 2006 (71 Fed. Reg. 36323), must satisfy the following conditions:

I. Conditions Regarding the Application:

1. the application must be a non-reissue utility or design application filed under 37 CFR 1.111(a);
2. the application, the petition and the required fees must be filed electronically using the USPTO's electronic filing system (EFS), or EFS-web; if not filed electronically, a statement asserting that EFS and EFS-web were not available during the normal business hours.
3. at the time of filing, the application must be complete under 37 CFR 1.51 and in condition for examination;
4. the application must contain three or fewer independent claims and twenty or fewer total claims and the claims must be directed to a single invention.

II. Conditions Regarding the Petition:

The petition must:

1. be filed with the application;

2. include a statement that applicant agrees not to separately argue the patentability of any independent claim during any appeal in the application;

3. include a statement that applicant agrees to make an election without traverse in a telephone interview.

4. include a statement that applicant agrees to conduct such an interview when requested by the examiner.

5. include a statement, made based on a good faith belief, that a preexamination search in compliance with the following requirements, was conducted, including an identification of the filed of search by United States class and subclass, where applicable, and for database searches, the search logic or chemical structure or sequence used as a query, the name of the file(s) searched and the database service, and the date of the search.

The preexamination search must:

5.1 involve U.S. patents and patent application publications, foreign patent documents, and non-patent literature, unless the applicant can justify with reasonable certainty that no references more pertinent than those already identified are likely to be found in the eliminated sources and includes such a justification with this statement;

5.2. be directed to the claimed invention and encompass all of the features of the claims, giving the claims the broadest reasonable interpretation;

5.3. encompass the disclosed features that may be claimed.

6. must provide in support of the petition an accelerated examination support document.

An accelerated examination support document must include:

6.1. an information disclosure statement (IDS) in compliance with 37 CFR 1.98 citing each reference deemed most closely related to the subject matter of each of the claims;

6.2. an identification of all the limitations in the claims that are disclosed by the reference specifying where the limitation is disclosed in the cited reference;

6.3. a detailed explanation of how each of the claims are patentable over the references cited with particularity required by 37 CFR 1.111(b) and (c);

6.4. a concise statement of the utility of the invention as defined in each of the independent claims (unless the application is a design application);

6.5. a showing of where each limitation of the claims finds support under 35 USC 112, first paragraph, in the written description of the specification. If applicable, the showing must also identify: (1) each means- (or step) plus-function claim element that invokes consideration under 35 UDC 112, sixth paragraph; and (2) the structure, material, or acts in the specification that corresponds to each means- (or step) plus-function claim element that invokes consideration under 35 UDC 112, sixth paragraph; if the application claims the benefit of one or more applications under title 35, United States Code, the showing must also include where each limitation of the claims finds support under 35 USC 112, first paragraph, in each such application in which such supports exists;

6.6. an identification of any cited references that may be disqualified under 35 USC 103(c).

REVIEW OF FACTS

The conditions I 1-4, II 1-4 and II 5.1, 5.3, II 6.1-6.4 and 6.6 above are considered to have been met. However, the petition fails to comply with conditions II 5.2, and II 6.5 above. Therefore, the petition fails to meet the required conditions to be accorded special status under the accelerated examination procedure.

Regarding the requirement of MPEP § 708.02(a)(I.)(H)[1] and items II.5.2 above, the preexamination search does not encompass all of the features of the claims, and does not appear to have given the claims the broadest reasonable interpretation.

Specifically, the text search strategy should be modified to include a reasonable number of synonyms for virus, performance, limit, monitor and resource. See below for popular synonyms.

Anti$1virus, malicious, malware, harmful, virus, viral: worm, threatening, trojan, mal$code, spyware, rootkit, suspicious, infect$, attack$3, botnet, compromis$4, zombie, virus

Performance: capacity, throughput, utiliz$, availability, latency, delay, (respon$4 complet$3 service instruction) near2 (time delay$3 slow), efficiency, perform$3, operat$3, consum$6

Limit$3: minimal$, minimiz$4, threshold$3, maximal$, maximiz$3, exceed$5, conserv$

Monitor$3: analyz$3 analysis collect$4 audit$3 compar$ determin$3 check$4 control$3 record$3 scan$3 track$3 manag$4

Resource: memory processor cpu (input adj2 output) (hard adj disk) power network

Finally, based upon the claimed subject matter of the instant application, a search in the following class and subclasses is recommended in order to provide full coverage of where the most pertinent references are most likely to be found: **Class 726 INFORMATION SECURITY: SUPPORT Subclass 1** (Policy) for subject matter related to for monitoring resource usage as compared to a setting.

This additional search area was confirmed with an examiner in the pertinent art area.

Petitioner should review all claim limitations, especially those asserted as patentable distinctions from the cited references to ensure that the search covers these concepts, and update the search and/or provide any clarifications if deemed necessary.

Regarding the requirement of MPEP § 708.02(a)(I.)(5) and item II. 6.5 above, the preexamination support document fails to provide a showing of the 112 1st support for each and every claim feature in the written description of the parent applications 12/892678 and Russian application 201019565 that this application claims benefit of.

DECISION

For the above-stated reasons, the petition is **dismissed**. The application will therefore be taken up by the examiner for action in its regular turn.

Petitioner is given a single opportunity to perfect the petition. Any request for reconsideration of this decision must be submitted within 1 (one) month or 30 (thirty) days, whichever is longer, (no extension of time under 37 CFR 1.136(a)) from the date of this decision in order to be considered timely. Any request for reconsideration must address the deficiencies indicated above.

Petitioner is reminded that, upon granting of the special status of the application on request for reconsideration, the application will be processed expeditiously. However, due to the dismissal of the instant petition, examination may not be completed within twelve months of the filing date of the application.

Any inquiry regarding this decision should be directed to Tod Swann, Quality Assurance Specialist, at (571) 272-3612. A second point of Contact is Kim Huynh at (571)-272-4147.

Tod R Swann, WQAS 2430
Technology Center 2400
Networking, Multiplex, Cable and Information Security

UNITED STATES PATENT AND TRADEMARK OFFICE

UNITED STATES DEPARTMENT OF COMMERCE
United States Patent and Trademark Office
Address: COMMISSIONER FOR PATENTS
P.O. Box 1450
Alexandria, Virginia 22313-1450
www.uspto.gov

APPLICATION NO.	FILING DATE	FIRST NAMED INVENTOR	ATTORNEY DOCKET NO.	CONFIRMATION NO.
13/034,257	02/24/2011	Oleg V. Zaitsev	031185-00035	1433

38485 7590 05/26/2011
ARENT FOX LLP
1675 BROADWAY
NEW YORK, NY 10019

EXAMINER
BARRON JR, GILBERTO

ART UNIT	PAPER NUMBER
2432	

NOTIFICATION DATE	DELIVERY MODE
05/26/2011	ELECTRONIC

Please find below and/or attached an Office communication concerning this application or proceeding.

The time period for reply, if any, is set in the attached communication.

Notice of the Office communication was sent electronically on above-indicated "Notification Date" to the following e-mail address(es):

NYIPDocket@arentfox.com
Patent_Mail@arentfox.com

UNITED STATES PATENT AND TRADEMARK OFFICE

COMMISSIONER FOR PATENTS
UNITED STATES PATENT AND TRADEMARK OFFICE
WASHINGTON, DC 20231
www.uspto.gov

Michael Fainberg
Arent Fox LLP
1675 Broadway
New York, NY 10019

In re Application of:
Zaitsev
Serial No.: 13/034257
Filed: February 24, 2011
Docket: 031185-00035
For: **Systems and Methods for Policy Based Program Configuration**

DECISION ON PETITION TO MAKE SPECIAL FOR NEW APPLICATION UNDER 37 C.F.R. § 1.102 & M.P.E.P. § 708.02

This is a decision on the petition re-filed on May 13, 2011 to make the above-identified application special for accelerated examination procedure under 37 C.F.R. § 1.102(d). The original petition was filed on February 24, 2011 and dismissed on April 14 2011.

The petition to make the application special is **GRANTED** as papers filed on May 13, 2011 including the Pre-Examination Search Document and the Examiner Support Document now meet the requirements of 37 C.F.R. § 1.102(d) and MPEP 708.02(a)(I) as the search is now encompasses all claim scope, the 35 USC 112 1st support references the parent applications.

The prosecution of the instant application will be conducted expeditiously according to the following guidelines.

The application will be docketed to an examiner and taken up for action within two weeks of the date of this decision.

1. Restriction Practice:
If the examiner determines that the claims are not directed to a single invention, a telephone request to elect one single invention will be made pursuant to MPEP 812.01. As a prerequisite to the grant of this petition, the applicant has agreed to make an oral election, by telephone, without traverse. If the applicant refuses to make an election without traverse, or the examiner cannot reach the applicant after a reasonable effort, the examiner will treat the first claimed invention (invention defined by claim 1) as having being constructively elected without traverse for examination.

2. Office action:

If it is determined that, after appropriate consultation, there is a potential rejection or any other issue to be addressed, the examiner will telephone the applicant and arrange an interview to discuss and resolve the issue. An Office action, other than a Notice of Allowance and Fee(s) Due (Notice of Allowance), will not be issued unless either: 1) an interview was conducted but did not result in agreed to action that places the application in condition for allowance, or, 2) a determination is made that an interview would be unlikely to result in the application being placed in condition for allowance, and 3) an internal conference has been held to review any rejection of any claim.

3. Time for Reply:
An Office action other than a Notice of Allowance or a final Office action will set a shortened statutory period of one month or thirty days, whichever is longer, for reply with no extension of time available under 37 CFR 1.136(a). Failure to timely file a reply within this non-extendible period for reply will result in the abandonment of the application.

4. Reply by Applicant:
A timely reply to an Office action other than the Notice of Allowance must be submitted electronically via EFS or EFS-web and limited to addressing the rejections, objections and requirement made. Any amendment that attempts to: 1) add claims which would result in more than three pending independent claims or more than twenty pending total claims; 2) present claims not encompassed by the pre-examination search or an updated accelerated examination support document; or 3) present claims that are directed a non-elected invention or an invention other than that previously claimed and examined in the application, will be treated as not fully responsive and will not be entered.

For any amendment to the claims (including any new claim) that is not encompassed by the accelerated examination support document, applicant must provide an updated accelerated examination support document that encompasses the amended or new claims at the time of filing of the amendment.

To proceed expeditiously with the examination, it is recommended that a reply with amendments made to any claim or with any new claim being added be accompanied by an updated accelerated examination support document or a statement explaining how the amended or new claim is supported by the original accelerated examination support document.

5. Information Disclosure Statement (IDS):

Any IDS filed during prosecution must be submitted electronically via EFS or EFS-web, accompanied by an updated accelerated examination support document, and be in compliance with 37 CFR 1.97 and 1.98.

6. Post-Allowance Processing:
To expedite processing of the allowed application into a patent, the applicant must: 1) pay the required fees within one month of the date of the Notice of Allowance, and 2) not file any post allowance papers not required by the Office. In no event may the issue fee be paid and accepted later than three months from the date of the Notice of Allowance.

7. After-Final and Appeal Procedures:
To expedite prosecution, after receiving the final Office action, applicant must: 1) promptly file a notice of appeal, an appeal brief and appeal fees; and 2) not request a pre-appeal brief conference.

Any amendment, affidavit or other evidence filed after final Office action must comply with applicable rules and the requirements outlined in numbered paragraphs 5 and 6 above.

On appeal, the application will proceed according to normal appeal procedures. After appeal, the application will again be treated special.

8. Proceedings Outside the Normal Examination Process:
If the application becomes involved in a proceeding that is outside the normal examination process (e.g., a secrecy order, national security review, interference proceeding, petitions under 37 CFR 1.181, 182 or 183), the application will be treated special before and after such proceeding.

9. Final Disposition:
The twelve month goal of this accelerated examination procedure ends with a final disposition. The mailing of a final Office action, a Notice of Allowance, the filing of a Notice of Appeal, or the filing of a Request for Continued Examination (RCE) is the final disposition.

If, during prosecution, a paper is not filed electronically using EFS-web, a reply is filed but is not fully responsive, the application is involved in an appeal, or a proceeding outside normal examination process, the application will still be examined expeditiously, however, the final disposition may occur more than twelve months from the filing of the application.

Any inquiry regarding this decision should be directed to Tod Swann, Quality Assurance Specialist, at (571) 272-3612. A second point of Contact is Kim Huynh at (571)-272-4147.

Tod R Swann, WQAS 2430
Technology Center 2400

UNITED STATES PATENT AND TRADEMARK OFFICE

Commissioner for Patents
United States Patent and Trademark Office
P.O. Box 1450
Alexandria, VA 22313-1450
www.uspto.gov

PATRICK W. RASCHE (20459)
ARMSTRONG TEASDALE LLP
7700 FORSYTH BOULEVARD
SUITE 1800
ST. LOUIS, MO 63105

MAILED
JAN 27 2012
OFFICE OF PETITIONS

Applicants: TAKAICHI, et al.
Appl. No.: 13/034,298
Filing Date: February 24, 2011
Title: SYSTEM POWER LEVELING DEVICE AND IMAGE DIAGNOSTIC SYSTEM
Attorney Docket: 16CT-JP09248 (20459-545)
Pub. No.: US 2011/0206272 A1
Pub. Date: August 25, 2011

This is a decision on the request for a corrected patent application publication under 37 CFR 1.221(b), received on October 24, 2011, for the above-identified application.

The request is DISMISSED.

Applicant requests that the application be republished because the patent application publication contains an error in claim 15 wherein line two reads "a load: and" but should read "a load; and".

37 CFR 1.221 (b) is applicable "only when the Office makes a material mistake which is apparent from Office records.... Any request for a corrected publication or revised patent application publication other than provided as provided in paragraph (a) of this section must be filed within two months from the date of the patent application publication. This period is not extendable." A material mistake must affect the public's ability to appreciate the technical disclosure of the patent application publication, to determine the scope of the patent application publication, or to determine the scope of the provisional rights that an applicant may seek to enforce upon issuance of a patent. [1]

The error noted in claim 15 is an Office error but is not a material Office error as defined under 37 CFR 1.221(b). In particular, the error does not affect the public's ability to determine the scope of the patent application publication or the interpretation of the published claims. See MPEP 1130 B.

[1] Changes to Implement Eighteen-Month Publication of Patent Applications, 65 FR 57023, 57038 (Sept. 20, 2000), 1239, Off. Gaz. Pat. Office Notices 63, 75 (Oct. 10, 2000) (final rule).

The applicant is advised that a "request for republication of an application previously published" may be filed under 37 CFR 1.221(a). Such a request for republication "must include a copy of the application compliance with the Office's electronic filing system requirements and be accompanied by the publication fee set forth in § 1.18(d) and the processing fee set forth in § 1.17(i)." If the request for republication does not comply with the electronic filing system requirements, the republication will not take place and the publication fee set forth in § 1.18(d) will be refunded. The processing fee will be retained.

A guide for filing a request for a Pre-Grant Publication, such as a request for republication, may be found on the link below:

http://www.uspto.gov/patents/process/file/efs/guidance/index.jsp

http://www.uspto.gov/ebc/portal/efs/pgpub_quickstart.pdf

Any request for republication under 37 CFR 1.221(a), must be submitted via the EFS system, as a "Pre-Grant Publication".

Inquiries relating to this matter may be directed to Sherry D. Brinkley at (571) 272-3204.

/Christopher Bottorff/

Christopher Bottorff
Petitions Examiner
Office of Petitions

Doc Code: PET.GREEN
Document Description: Petition for Green Tech Pilot

PTO/SB/420 (11-10)
Approved for use through 01/31/2011. OMB 0651-0062
U.S. Patent and Trademark Office; U. S. DEPARTMENT OF COMMERCE
Under the Paperwork Reduction Act of 1995, no persons are required to respond to a collection of information unless it displays a valid OMB control number.

PETITION TO MAKE SPECIAL UNDER THE GREEN TECHNOLOGY PILOT PROGRAM

Attorney Docket Number: 4098.1008-000	Application Number (if known): 13/034,352	Filing date: February 24, 2011
First Named Inventor: RONALD P. MILLMAN, JR.		
Title: MODULAR APPARATUS FOR WAFER EDGE PROCESSING		

APPLICANT HEREBY REQUESTS TO PARTICIPATE IN THE GREEN TECHNOLOGY PILOT PROGRAM FOR THE ABOVE-IDENTIFIED APPLICATION. See Instruction Sheet on page 2.

This petition must be timely filed electronically using the USPTO electronic filing system, EFS-Web.

1. By filing this petition:

   Applicant is requesting early publication: Applicant hereby requests early publication under 37 CFR 1.219 and the publication fee set forth in 37 CFR 1.18(d) accompanies this request.

2. By filing this petition: applicant is agreeing to make an election without traverse in a telephonic interview and elect an invention that meets the eligibility requirements for the Green Technology Pilot Program, if the Office determines that the claims are not obviously directed to a single invention. See Instruction Sheet.

3. This request is accompanied by statements of special status for the eligibility requirement.

4. The application contains no more than three (3) independent claims and twenty (20) total claims.

5. The application does not contain any multiple dependent claims.

6. Other attachments: Authorization to Charge Pub. Fee; Declaration of Special Status with Exhibits

Signature /David J. Thibodeau Jr. Reg. No. 31671/	Date February 28, 2011
Name (Print/Typed) David J. Thibodeau, Jr.	Registration Number 31,671

Note: *Signatures of all the inventors or assignees of record of the entire interest or their representative(s) are required in accordance with 37 CFR 1.33 and 11.18. Please see 37 CFR 1.4(d) for the form of the signature. If necessary, submit multiple forms for more than one signature see below*.*

☒ *Total of 1 forms are submitted.

The information is required to obtain or retain a benefit by the public which is to file (and by the USPTO to process) an application. Confidentiality is governed by 35 U.S.C. 122 and 37 CFR 1.11 and 1.14. This collection is estimated to take 12 hours to complete, including gathering, preparing, and submitting the completed application form to the USPTO. Time will vary depending upon the individual case. Any comments on the amount of time you require to complete this form and/or suggestions for reducing this burden, should be sent to the Chief Information Officer, U.S. Patent and Trademark Office, U.S. Department of Commerce, P.O. Box 1450, Alexandria, VA 22313-1450. DO NOT SEND FEES OR COMPLETED FORMS TO THIS ADDRESS. **SEND TO: Commissioner for Patents, P.O. Box 1450, Alexandria, VA 22313-1450.**

If you need assistance in completing the form, call 1-800-PTO-9199 and select option 2.

UNITED STATES PATENT AND TRADEMARK OFFICE

UNITED STATES DEPARTMENT OF COMMERCE
United States Patent and Trademark Office
Address: COMMISSIONER FOR PATENTS
P.O. Box 1450
Alexandria, Virginia 22313-1450
www.uspto.gov

APPLICATION NO.	FILING DATE	FIRST NAMED INVENTOR	ATTORNEY DOCKET NO.	CONFIRMATION NO.
13/034,352	02/24/2011	Ronald P. Millman JR.	4098.1008-000	1621

21005 7590 03/29/2011
HAMILTON, BROOK, SMITH & REYNOLDS, P.C.
530 VIRGINIA ROAD
P.O. BOX 9133
CONCORD, MA 01742-9133

EXAMINER

ART UNIT	PAPER NUMBER
2812	

MAIL DATE	DELIVERY MODE
03/29/2011	PAPER

Please find below and/or attached an Office communication concerning this application or proceeding.

The time period for reply, if any, is set in the attached communication.

UNITED STATES PATENT AND TRADEMARK OFFICE

Commissioner for Patents
United States Patent and Trademark Office
P.O. Box 1450
Alexandria, VA 22313-1450
www.uspto.gov

HAMILTON, BROOK, SMITH & REYNOLDS, P.C.
530 VIRGINIA ROAD
P.O. BOX 9133
CONCORD MA 01742-9133

In re Application of	:	
MILLMAN et al.	:	DECISION ON PETITION
Application No. 13/034,352	:	TO MAKE SPECIAL UNDER
Filed: February 24, 2011	:	THE GREEN TECHNOLOGY
Attorney Docket No. 4098.1008-000	:	PILOT PROGRAM

This is a decision on the petition under 37 CFR 1.102, filed on February 28, 2011, to make the above-identified application special under the pilot program for applications pertaining to Green Technologies as set forth 74 Federal Register Notice 64666 (December 8, 2009) and amended by 75 Federal Register Notice 28554 (May 21, 2010) and 75 Federal Register Notice 69049 (November 10, 2010).

The petition is **GRANTED**.

A grantable petition to make an application special under 37 CFR 1.102 and the pilot program as set forth in 74 FR 64666 must be directed to a nonprovisional application filed under 35 USC 111(a) or be a national stage entry under 35 USC 371, exclusive of any reissue applications.

In order to qualify for special status, the following requirements must be met. 1) The application must have no more than 3 independent claims and no more than 20 total claims. 2) The application must not contain any multiple dependent claims. 3) The petition must state the basis for seeking special status, i.e., the claimed invention either: A) materially enhances the quality of the environment or B) materially contributes to: i) the discovery or development of renewable energy resources, ii) the more efficient utilization and conservation of energy resources, or iii) greenhouse gas emission reduction. 4) If the disclosure is not clear on its face that the claimed invention materially contributes under category (A) or (B), the petition must be accompanied by a statement by the applicant, assignee, or an attorney/agent registered to practice before the Office explaining how the materiality standard is met. 5) A statement that applicant will agree to make an election without traverse in a telephonic interview if a restriction requirement is made by the examiner. 6) The petition to make special must be filed electronically. 7) The petition must be filed at least one day prior to the date that a first Office Action appears in the Patent Application Information Retrieval (PAIR) system. 8) The petition must be accompanied by a request for early publication in compliance with 37 CFR 1.219 and include the publication fee as set forth in 37 CFR 1.18(d).

The requirement for a fee for consideration of the petition to make special for applications pertaining to Green Technologies has been waived.

The instant petition complies with items 1 – 8 above. Accordingly, the above-identified application has been accorded "special" status.

Telephone inquires concerning this decision should be directed to Lee W. Young at 571-272-4549.

The application is being forwarded to the Technology Center Art Unit 2812 for action in its regular turn.

Lee W. Young
Quality Assurance Specialist
Technology Center 2800

Docket No.: 3449-1122PUS3
(Patent)

IN THE UNITED STATES PATENT AND TRADEMARK OFFICE

Patent Application of:	Hwan Hee JEONG et al.		
Application No.:	13/034,376	Confirmation No.:	1666
Filed:	February 24, 2011	Art Unit:	2892
For:	SEMICONDUCTOR LIGHT EMITTING DEVICE	Examiner:	Trung Q. Dang

STATEMENT OF SPECIAL STATUS FOR THE ELIGIBILITY REQUIREMENT UNDER THE GREEN TECHNOLOGY PILOT PROGRAM

Commissioner for Patents
P.O. Box 1450
Alexandria, VA 22313-1450

Sir:

In support of the Petition to Make Special Under the Green Technology Pilot Program, it is respectfully submitted that the basis for the requested special status is that the invention claimed in the above-identified patent application materially contributes to the development of environmental quality and energy conservation. Specifically, the claimed invention relates to a Semiconductor Light Emitting Device.

For example, Light Emitting Devices have a much longer life-span than conventional light sources such as fluorescent tubes or other traditional light sources. Semiconductor Light Emitting Devices also use less energy or power to operate than other traditional light sources. Thus, the environmental quality is significantly improved and energy is conserved.

Additionally, by filing this petition, Applicants agree to make an election without traverse in a telephone interview and elect an invention that meets the eligibility requirements set forth in the notice titled "Pilot Program for Green Technologies Including Greenhouse Gas Reduction," as modified by the notice titled "Elimination of Classification Requirement in the Green

Technology Pilot Program," each of which was published in the Federal Register, if the Office determines that the claims are not obviously directed to a single invention.

It is also submitted that this application meets the eligibility requirements to participate in the Green Technology Pilot Program, as listed in the attached Petition to Make Special Under the Green Technology Pilot Program.

Accordingly, it is respectfully requested the Petition be granted.

Should there be any outstanding matters that need to be resolved in the present application, the Examiner is respectfully requested to contact Michael E. Monaco, Registration No. 52,041, at the telephone number of the undersigned below to conduct an interview in an effort to expedite prosecution in connection with the present application.

If necessary, the Director is hereby authorized in this, concurrent, and future replies to charge any fees required during the pendency of the above-identified application or credit any overpayment to Deposit Account No. 02-2448.

Dated: APR 26 2011

Respectfully submitted,

DAVID A. BILODEAU
USPTO #42,325

By _____

James T. Eller, Jr.
Registration No.: 39538
BIRCH, STEWART, KOLASCH & BIRCH, LLP
8110 Gatehouse Road, Suite 100 East
P.O. Box 747
Falls Church, VA 22040-0747
703-205-8000

DAVID A. BILODEAU
USPTO #42,325

Attachment: Petition to Make Special Under the Green Technology Pilot Program

Doc Code: PET.GREEN
Document Description: Petition for Green Tech Pilot

PTO/SB/420 (05-10)
Approved for use through 05/31/2010. OMB 0651-0062
U.S. Patent and Trademark Office; U. S. DEPARTMENT OF COMMERCE
Under the Paperwork Reduction Act of 1995, no persons are required to respond to a collection of information unless it displays a valid OMB control number.

PETITION TO MAKE SPECIAL UNDER THE GREEN TECHNOLOGY PILOT PROGRAM

Attorney Docket Number: 3449-1122PUS3	Application Number (if known): 13/034,376	Filing date: February 24, 2011
First Named Inventor: Hwan Hee JEONG		
Title: SEMICONDUCTOR LIGHT EMITTING DEVICE		

APPLICANT HEREBY REQUESTS TO PARTICIPATE IN THE GREEN TECHNOLOGY PILOT PROGRAM FOR THE ABOVE-IDENTIFIED APPLICATION. See Instruction Sheet on page 2.

This petition must be timely filed electronically using the USPTO electronic filing system, EFS-Web.

1. By filing this petition:

   Applicant is requesting early publication: Applicant hereby requests early publication under 37 CFR 1.219 and the publication fee set forth in 37 CFR 1.18(d) accompanies this request.

2. By filing this petition: applicant is agreeing to make an election without traverse in a telephonic interview and elect an invention that meets the eligibility requirements set forth in the notice titled "Pilot Program for Green Technologies Including Greenhouse Gas Reduction," as modified by the notice titled "Elimination of Classification Requirement in the Green Technology Pilot Program," each of which was published in the Federal Register, if the Office determines that the claims are not obviously directed to a single invention.

3. This request is accompanied by statements of special status for the eligibility requirement.

4. The application contains no more than three (3) independent claims and twenty (20) total claims.

5. The application does not contain any multiple dependent claims.

6. Other attachments: _____

Signature	**DAVID A. BILODEAU USPTO #42,325**	Date APR 26 2011
Name (Print/Typed) James T. Eller, Jr.		Registration Number 39538

Note: *Signatures of all the inventors or assignees of record of the entire interest or their representative(s) are required in accordance with 37 CFR 1.33 and 11.18. Please see 37 CFR 1.4(d) for the form of the signature. If necessary, submit multiple forms for more than one signature, see below*.*

☑ *Total of 1 forms are submitted.

The information is required to obtain or retain a benefit by the public which is to file (and by the USPTO to process) an application. Confidentiality is governed by 35 U.S.C. 122 and 37 CFR 1.11 and 1.14. This collection is estimated to take 12 hours to complete, including gathering, preparing, and submitting the completed application form to the USPTO. Time will vary depending upon the individual case. Any comments on the amount of time you require to complete this form and/or suggestions for reducing this burden, should be sent to the Chief Information Officer, U.S. Patent and Trademark Office, U.S. Department of Commerce, P.O. Box 1450, Alexandria, VA 22313-1450. DO NOT SEND FEES OR COMPLETED FORMS TO THIS ADDRESS. **SEND TO: Commissioner for Patents, P.O. Box 1450, Alexandria, VA 22313-1450.**

If you need assistance in completing the form, call 1-800-PTO-9199 and select option 2.

UNITED STATES PATENT AND TRADEMARK OFFICE

UNITED STATES DEPARTMENT OF COMMERCE
United States Patent and Trademark Office
Address: COMMISSIONER FOR PATENTS
P.O. Box 1450
Alexandria, Virginia 22313-1450
www.uspto.gov

APPLICATION NO.	FILING DATE	FIRST NAMED INVENTOR	ATTORNEY DOCKET NO.	CONFIRMATION NO.
13/034,376	02/24/2011	Hwan Hee JEONG		1666

2292 7590 05/05/2011
BIRCH STEWART KOLASCH & BIRCH
PO BOX 747
FALLS CHURCH, VA 22040-0747

EXAMINER
DANG, TRUNG Q

ART UNIT	PAPER NUMBER
2892	

NOTIFICATION DATE	DELIVERY MODE
05/05/2011	ELECTRONIC

Please find below and/or attached an Office communication concerning this application or proceeding.

The time period for reply, if any, is set in the attached communication.

Notice of the Office communication was sent electronically on above-indicated "Notification Date" to the following e-mail address(es):

mailroom@bskb.com

UNITED STATES PATENT AND TRADEMARK OFFICE

Commissioner for Patents
United States Patent and Trademark Office
P.O. Box 1450
Alexandria, VA 22313-1450
www.uspto.gov

BIRCH STEWART KOLASCH & BIRCH
PO BOX 747
FALLS CHURCH VA 22040-0747

In re Application of	:	
Hwan Hee JEONG	:	DECISION ON PETITION
Application No. 13/034,376	:	TO MAKE SPECIAL UNDER
Filed: February 24, 2011	:	THE GREEN TECHNOLOGY
Attorney Docket No. 3449-1122PUS3	:	PILOT PROGRAM

This is a decision on the petition under 37 CFR 1.102, filed on April 26, 2011, to make the above-identified application special under the pilot program for applications pertaining to Green Technologies as set forth 74 Federal Register Notice 64666 (December 8, 2009) and amended by 75 Federal Register Notice 28554 (May 21, 2010) and 75 Federal Register Notice 69049 (November 10, 2010).

The petition is **GRANTED**.

A grantable petition to make an application special under 37 CFR 1.102 and the pilot program as set forth in 74 FR 64666 must be directed to a nonprovisional application filed under 35 USC 111(a) or be a national stage entry under 35 USC 371, exclusive of any reissue applications.

In order to qualify for special status, the following requirements must be met. 1) The application must have no more than 3 independent claims and no more than 20 total claims. 2) The application must not contain any multiple dependent claims. 3) The petition must state the basis for seeking special status, i.e., the claimed invention either: A) materially enhances the quality of the environment or B) materially contributes to: i) the discovery or development of renewable energy resources, ii) the more efficient utilization and conservation of energy resources, or iii) greenhouse gas emission reduction. 4) If the disclosure is not clear on its face that the claimed invention materially contributes under category (A) or (B), the petition must be accompanied by a statement by the applicant, assignee, or an attorney/agent registered to practice before the Office explaining how the materiality standard is met. 5) A statement that applicant will agree to make an election without traverse in a telephonic interview if a restriction requirement is made by the examiner. 6) The petition to make special must be filed electronically. 7) The petition must be filed at least one day prior to the date that a first Office Action appears in the Patent Application Information Retrieval (PAIR) system. 8) The petition must be accompanied by a request for early publication in compliance with 37 CFR 1.219 and include the publication fee as set forth in 37 CFR 1.18(d).

The requirement for a fee for consideration of the petition to make special for applications pertaining to Green Technologies has been waived.

The instant petition complies with items 1 – 8 above. Accordingly, the above-identified application has been accorded "special" status.

Telephone inquires concerning this decision should be directed to Lee W. Young at 571-272-4549.

The application is being forwarded to the Technology Center Art Unit 2892 for action on the merits commensurate with this decision.

Lee W. Young
Quality Assurance Specialist
Technology Center 2800

UNITED STATES PATENT AND TRADEMARK OFFICE

Commissioner for Patents
United States Patent and Trademark Office
P.O. Box 1450
Alexandria, VA 22313-1450
www.uspto.gov

THOMPSON HINE L.L.P.
INTELLECTUAL PROPERTY GROUP
P.O. BOX 8801
DAYTON, OH 45401-8801

MAILED
JUN 03 2011
OFFICE OF PETITIONS

In re Application of	:	
Gholam A. Peyman	:	
Application No. 13/034,423	:	ON PETITION
Filed: February 24, 2011	:	
Attorney Docket No. 075200.25	:	

This is a decision on the petition under 37 CFR 1.102(c)(1), filed March 2, 2011, to make the above-identified application special based on applicant's age as set forth in M.P.E.P. § 708.02, Section IV.

The petition is **GRANTED**.

A grantable petition to make an application special under 37 CFR 1.102(c)(1) and MPEP § 708.02, Section IV: Applicant's Age must be accompanied by evidence showing that at least one of the applicants is 65 years of age, or more, such as a birth certificate or a statement by applicant. No fee is required.

The instant petition includes a statement by the applicant's attorney that he is over than 65 years of age and is also accompanied with a Declaration from applicant that he is over 65 years of age. Accordingly, the above-identified application has been accorded "special" status.

Telephone inquiries concerning this decision should be directed to the undersigned at 571-272-6059. All other inquiries concerning either the examination or status of the application should be directed to the Technology Center.

This matter is being referred to the Technology Center Art Unit 3774 for action on the merits commensurate with this decision.

A. Kelley

Alicia Kelley
Petitions Examiner
Office of Petitions

Doc Code: PET.AUTO **Document Description: Petition automatically granted by EFS-Web**	PTO/SB/83 U.S. Patent and Trademark Office Department of Commerce

Electronic Petition Request	**REQUEST FOR WITHDRAWAL AS ATTORNEY OR AGENT AND CHANGE OF CORRESPONDENCE ADDRESS**
Application Number	13034448
Filing Date	24-Feb-2011
First Named Inventor	Richard EWERS
Art Unit	3773
Examiner Name	
Attorney Docket Number	USGINZ08000
Title	ENDOSCOPIC TISSUE ANCHOR DEPLOYMENT DEVICES AND METHODS

◉ Please withdraw me as attorney or agent for the above identified patent application and the practitioners of record associated with Customer Number: 40518

The reason(s) for this request are those described in 37 CFR:

10.40(b)(4)

Certifications

☒ I/We have given reasonable notice to the client, prior to the expiration of the response period, that the practitioner(s) intend to withdraw from employment

☒ I/We have delivered to the client or a duly authorized representative of the client all papers and property (including funds) to which the client is entitled

☒ I/We have notified the client of any responses that may be due and the time frame within which the client must respond

Change the correspondence address and direct all future correspondence to the first named inventor or assignee that has properly made itself of record pursuant to 37 CFR 3.71:

Name	USGI Medical, Inc.
Address	1140 Calle Cordillera
City	San Clemente
State	CA
Postal Code	92673
Country	US

I am authorized to sign on behalf of myself and all withdrawing practitioners.	
Signature	/Johney U. Han/
Name	Johney U. Han
Registration Number	45565

UNITED STATES PATENT AND TRADEMARK OFFICE

Commissioner for Patents
United States Patent and Trademark Office
P.O. Box 1450
Alexandria, VA 22313-1450
www.uspto.gov

Decision Date : October 7,2011

In re Application of :

Richard EWERS

Application No : 13034448

Filed : 24-Feb-2011

Attorney Docket No : USGINZ08000

DECISION ON REQUEST TO WITHDRAW AS ATTORNEY/AGENTOF RECORD

This is an electronic decision on the Request to Withdraw as attorney or agent of record under 37 CFR § 1.36(b), filed October 7,2011

The request is **APPROVED.**

The request was signed by Johney U. Han (registration no. 45565) on behalf of all attorneys/agents associated with Customer Number 40518 . All attorneys/agents associated with Cusotmer Number 40518 have been withdrawn.

Since there are no remaining attorneys of record, all future communications from the Office will be directed to the first named inventor or assignee that has properly made itself of record pursuant to 37 CFR 3.71, with correspondence address:

Name	USGI Medical, Inc.
Name2	
Address 1	1140 Calle Cordillera
Address 2	
City	San Clemente
State	CA
Postal Code	92673
Country	US

As a reminder, requester is required to inform the first named inventor or assignee that has properly made itself of record pursuant to 37 CFR 3.71 of the electronically processed petition.

Telephone inquiries concerning this decision should be directed to the Patent Electronic Business Center (EBC) at 866-217-9197.

Office of Petitions

REQUEST FOR PARTICIPATION IN THE PATENT COOPERATION TREATY – PATENT PROSECUTION HIGHWAY (PCT-PPH) PILOT PROGRAM BETWEEN THE KOREAN INTELLECTUAL PROPERTY OFFICE (KIPO) AND THE USPTO

Application No.:	13/034,449	Filing Date:	February 24, 2011
First Named Inventor:	Thanigaivel Ashwin Raj		
Title of the Invention:	ALIAS MANAGEMENT AND VALUE TRANSFER CLAIM PROCESSING		

THIS REQUEST FOR PARTICIPATION IN THE PCT-PPH PILOT PROGRAM ALONG WITH THE REQUIRED DOCUMENTS MUST BE SUBMITTED VIA EFS-WEB. INFORMATION REGARDING EFS-WEB IS AVAILABLE AT HTTP://WWW.USPTO.GOV/EBC/EFS_HELP.HTML.

APPLICANT HEREBY REQUESTS PARTICIPATION IN THE PCT_PPH PROGRAM AND PETITIONS TO MAKE THE ABOVE-IDENTIFIED APPLICATION SPECIAL UNDER THE PCT-PPH PROGRAM.

The above-identified application is (1) a national stage entry of the corresponding PCT application, or (2) a national stage entry of another PCT application which claims priority to the corresponding PCT application, or (3) a national application that claims domestic/ foreign priority to the corresponding PCT application, or (4) a national application which forms the basis for the priority claim in the corresponding PCT application.

The corresponding PCT application number(s) is/are: PCT/US2011/033111

The international date of the corresponding PCT is/are: April 19, 2011

I. List of Required Documents:

a. **A copy of the latest international work product (WO/ISA, WO/IPEA, or IPER) in the above-identified corresponding PCT application(s)**

☒ Is attached.

☐ Is not attached because the document is already in the U.S. application.

b. **A copy of all claims which were indicated as having novelty, inventive step and industrial applicability in the above-identified corresponding PCT application(s)**

☐ Is attached.

☒ Is not attached because the document is already in the U.S. application.

c. **English translations of the documents in a. and b. above are attached (if the documents are not in the English language). A statement that the English translation is accurate is attached for the document in b. above.**

d. **(1) An information disclosure statement listing the documents cited in the international work products (ISR, WO/ISA, WO/IOEA, IPER) of the corresponding PCT application**

☒ Is attached.

☐ Has already been filed in the above-identified U.S. application on _____

(2) Copies of all documents (except for U.S. patents or U.S. patent application publications)

☒ Are attached.

☐ Have already been filed in the above-identified U.S. application on _____

REQUEST FOR PARTICIPATION IN THE PCT-PPH PILOT PROGRAM BETWEEN THE KIPO AND THE USPTO

(continued)

Application No.:	13/034,449
First Named Inventor:	Thanigaivel Ashwin Raj

II. Claims Correspondence Table:

Claims in US Application	Patentable Claims in the corresponding PCT Application	Explanation regarding the correspondence
1-20	1-20	Exact correspondence

III. All the claims in the US application sufficiently correspond to the patentable claims in the corresponding PCT application.

Signature	/Girish M. Basarkar/	Date	11/28/11
Name (Print/Typed)	Girish M. Basarkar	Registration Number	64,508

UNITED STATES PATENT AND TRADEMARK OFFICE

Commissioner for Patents
United States Patent and Trademark Office
P.O. Box 1450
Alexandria, VA 22313-1450
www.uspto.gov

**KILPATRICK TOWNSEND &
STOCKTON LLP/VISA
TWO EMBARCADERO CENTER,
8TH FLOOR
SAN FRANCISCO CA 94111**

MAILED
JAN 30 2012
OFFICE OF PETITIONS

**In re Application of
RAJ, et al
Application No.: 13/034,449
Filed: February 24, 2011
Attorney Docket No.: 79900-791988(068410US)
For: ALIAS MANAGEMENT AND VALUE TRANSFER CLAIM PROCESSING**

**: DECISION ON REQUEST TO
: PARTICIPATE IN THE PATENT
: PROSECUTION HIGHWAY
: PROGRAM AND PETITION
: TO MAKE SPECIAL UNDER
: 37 CFR 1.102(a)**

This is a decision on the request to participate in the PCT Patent Prosecution Highway (PCT-PPH) pilot program and the petition under 37 CFR 1.102(a), filed on November 30, 2011 to make the above-identified application special.

The request and petition are **GRANTED**.

Discussion

A grantable request to participate in the PCT-PPH pilot program and petition to make special require:

(1) The U.S. application must have an eligible relationship to one or more PCT applications where the ISA or IPEA are the JPO, EPO, Australia, Austria, KIPO, NPI, Russia, Spain, Sweden, Finland, China or USPTO;

(2) At least one claim in the PCT application has novelty, inventive step, and industrial applicability and must be free of any observations in Box VIII in the latest work product in the international stage or applicant must identify and explain why the claim(s) is/are not subject to the observation in Box VIII;

(3) Applicant must submit a copy of the claim(s) from the PCT application(s) that have novelty, inventive step, and industrial applicability along with an English translation thereof and a statement that the English translation is accurate, if the claims are not in the English language;

(4) All the claims in the U.S. application must sufficiently correspond or be amended to sufficiently correspond to the claim(s) that have novelty, inventive step, and industrial applicability in the PCT application(s);

(5) Examination of the U.S. application has not begun;

(6) Applicant must submit a copy of the latest international work product from the PCT application indicating that the claim(s) have novelty, inventive step, and industrial applicability along with an English translation thereof and a statement that the English translation is accurate if the latest international work product is not in the English language;

(7) Applicant must submit an IDS listing the documents cited by the PCT examiner in the international work product along with copies of documents except U.S. patents or U.S. patent application publications.

The request to participate in the PCT-PPH pilot program and petition comply with the above requirements. Accordingly, the above-identified application has been accorded "special" status.

Telephone inquiries concerning this decision should be directed to Diane Goodwyn at (571) 272-6735.

All other inquiries concerning the examination or status of the application is accessible in the PAIR system at http://www.uspto.gov/ebc.index.html.

This application is being forwarded to Technology Center 2432 for action on the merits commensurate with this decision.

David Bucci
Petitions Examiner
Office of Petitions

UNITED STATES PATENT AND TRADEMARK OFFICE

Commissioner for Patents
United States Patent and Trademark Office
P.O. Box 1450
Alexandria, VA 22313-1450
www.uspto.gov

In re Application of
Abraham Nudelman

Application No. 13034453

Filed: February 24,2011

Attorney Docket No. 51339

:
:
:DECISION ON PETITION TO MAKE SPECIAL
:UNDER 37 CFR 1.102(c)(1)
:

This is a decision on the electronic petition under 37 CFR 1.102 (c)(1), filed 30-SEP-2011 to make the above-identified application special based on applicant's age as set forth in MPEP § 708.02, Section IV.

The petition is **GRANTED**.

A grantable petition to make an application special under 37 CFR 1.102(c)(1), MPEP § 708.02, Section IV: Applicant's Age must include a statement by applicant or a registered practitioner having evidence that applicant is at least 65 years of age. No fee is required.

Accordingly, the above-identified application has been accorded "special" status and will be taken up for action by the examiner upon the completion of all pre-examination processing.

Telephone inquiries concerning this electronic decision should be directed to the Electronic Business Center at 866-217-9197.

All other inquiries concerning either the examination or status of the application should be directed to the Technology Center.

Doc code : PET.OP.AGE
Description : Petition to make special based on Age/Health

PTO/SB/130 (07-09)
Approved for use through 07/31/2012. OMB 0651- 0031
U.S. Patent and Trademark Office; U.S. DEPARTMENT OF COMMERCE
Under the Paperwork Reduction Act of 1995, no persons are required to respond to a collection of information unless it contains a valid OMB control number

PETITION TO MAKE SPECIAL BASED ON AGE FOR ADVANCEMENT OF EXAMINATION UNDER 37 CFR 1.102(c)(1)

Application Information

Application Number	13/034,453	Confirmation Number	1824	Filing Date	2011-02-24
Attorney Docket Number (optional)	11320.0016	Art Unit	1614	Examiner	
First Named Inventor	Abraham Nudelman				
Title of Invention	CRYSTALLINE FORMS OF THE TRI-MESYLATE SALT OF PERPHENAZINE-GABA AND PROCESS OF PRODUCING THE SAME				

Attention: Office of Petitions

An application may be made special for advancement of examination upon filing of a petition showing that the applicant is 65 years of age, or more. No fee is required with such a petition. See 37 CFR 1.102(c)(1) and MPEP 708.02 (IV).

APPLICANT HEREBY PETITIONS TO MAKE SPECIAL FOR ADVANCEMENT OF EXAMINATION IN THIS APPLICATION UNDER 37 CFR 1.102(c)(1) and MPEP 708.02 (IV) ON THE BASIS OF THE APPLICANT'S AGE.

A grantable petition requires one of the following items:
(1) Statement by one named inventor in the application that he/she is 65 years of age, or more; or
(2) Certification by a registered attorney/agent having evidence such as a birth certificate, passport, driver's license, etc. showing one named inventor in the application is 65 years of age, or more.

Name of Inventor who is 65 years of age, or older

Given Name	Middle Name	Family Name	Suffix
Abraham		Nudelman	

A signature of the applicant or representative is required in accordance with 37 CFR 1.33 and 10.18.
Please see 37 CFR 1.4(d) for the format of the signature.

Select (1) or (2) :

○ (1) I am an inventor in this application and I am 65 years of age, or more.

● (2) I am an attorney or agent registered to practice before the Patent and Trademark Office, and I certify that I am in possession of evidence, and will retain such in the application file record, showing that the inventor listed above is 65 years of age, or more.

Signature	/Steven P. O'Connor/	Date (YYYY-MM-DD)	2011-09-30
Name	Steven P. O'Connor	Registration Number	41225

PTO/SB/130 (07-09)
Approved for use through 07/31/2012. OMB 0651- 0031
U.S. Patent and Trademark Office; U.S. DEPARTMENT OF COMMERCE
Under the Paperwork Reduction Act of 1995, no persons are required to respond to a collection of information unless it contains a valid OMB control number

Privacy Act Statement

The Privacy Act of 1974 (P.L. 93-579) requires that you be given certain information in connection with your submission of the attached form related to a patent application or patent. Accordingly, pursuant to the requirements of the Act, please be advised that: (1) the general authority for the collection of this information is 35 U.S.C. 2(b)(2); (2) furnishing of the information solicited is voluntary; and (3) the principal purpose for which the information is used by the U.S. Patent and Trademark Office is to process and/or examine your submission related to a patent application or patent. If you do not furnish the requested information, the U.S. Patent and Trademark Office may not be able to process and/or examine your submission, which may result in termination of proceedings or abandonment of the application or expiration of the patent.

The information provided by you in this form will be subject to the following routine uses:

1. The information on this form will be treated confidentially to the extent allowed under the Freedom of Information Act (5 U.S.C. 552) and the Privacy Act (5 U.S.C. 552a). Records from this system of records may be disclosed to the Department of Justice to determine whether the Fr eedom of Information Act requires disclosure of these records.

2. A record from this system of records may be disclosed, as a routine use, in the course of presenting evidence to a court, magistrate, or administrative tribunal, including disclosures to opposing counsel in the course of settlement negotiations.

3. A record in this system of records may be disclosed, as a routine use, to a Member of Congress submitting a request involving an individual, to whom the record pertains, when the individual has requested assistance from the Member with respect to the subject matter of the record.

4. A record in this system of records may be disclosed, as a routine use, to a contractor of the Agency having need for the information in order to perform a contract. Recipients of information shall be required to comply with the requirements of the Privacy Act of 1974, as amended, pursuant to 5 U.S.C. 552a(m).

5. A record related to an International Application filed under the Patent Cooperation Treaty in this system of records may be disclosed, as a routine use, to the International Bureau of the World Intellectual Property Organization, pursuant to the Patent Cooperation Treaty.

6. A record in this system of records may be disclosed, as a routine use, to another federal agency for purposes of National Security review (35 U.S.C. 181) and for review pursuant to the Atomic Energy Act (42 U.S.C. 218(c)).

7. A record from this system of records may be disclosed, as a routine use, to the Administrator, General Services, or his/her designee, during an inspection of records conducted by GSA as part of that agency's responsibility to recommend improvements in records management practices and programs, under authority of 44 U.S.C. 2904 and 2906. Such disclosure shall be made in accordance with the GSA regulations governing inspection of records for this purpose, and any other relevant (i.e., GSA or Commerce) directive. Such disclosure shall not be used to make determinations about indivi duals.

8. A record from this system of records may be disclosed, as a routine use, to the public after either publication of the application pursuant to 35 U.S.C. 122(b) or issuance of a patent pursuant to 35 U.S.C. 151. Further, a record may be disclosed, subject to the limitations of 37 CFR 1.14, as a routine use, to the public if the record was filed in an application which became abandoned or in which the proceedings were terminated and which application is referenced by either a published application, an application open to public inspections or an issued patent.

9. A record from this system of records may be disclosed, as a routine use, to a Federal, State, or local law enforcement agency, if the USPTO becomes aware of a violation or potential violation of law or regulation.

UNITED STATES PATENT AND TRADEMARK OFFICE

Commissioner for Patents
United States Patent and Trademark Office
P.O. Box 1450
Alexandria, VA 22313-1450
www.uspto.gov

VOLPE AND KOENIG, P.C.
DEPT. ICC
UNITED PLAZA
30 SOUTH 17TH STREET
PHILADELPHIA PA 19103

MAILED

OCT 13 2011

OFFICE OF PETITIONS

In re Application of	:	
Saad Ahmad et al.	:	
Application No. 13/034,472	:	DECISION ACCORDING STATUS
Filed: February 24, 2011	:	UNDER 37 CFR 1.47(a)
Attorney Docket No. IDC-10355US02	:	

This is in response to the petition filed October 6, 2011 under 37 CFR 1.47(a).

The petition under 37 CFR 1.47(a) is **GRANTED**.

The above-identified application was filed on February 24, 2011 without an executed declaration. Accordingly, a Notice to File Missing Parts was mailed March 9, 2011 requiring an executed oath or declaration and a surcharge for its late filing.

In response, an oath or declaration executed by all inventors except joint inventor Zaid Al-Khatib, a five month extension of time request and the instant petition, seeking status under 37 CFR 1.47, was filed. Petitioners claim that joint inventor Zaid Al-Khatib refuses to execute the declaration.

A grantable petition under 37 CFR 1.47(a) requires: (1) proof that the non-signing inventor cannot be reached or refuses to sign the oath or declaration after having been presented with the application papers (specification, claims and drawings); (2) an acceptable oath or declaration in compliance with 35 U.S.C. §§ 115 and 116; (3) the petition fee; and (4) a statement of the last known address of the non-signing inventor.

The petition bears proof that the application papers were forwarded to and received by joint inventor Zaid Al-Khatib, he has not returned an executed copy of the oath or declaration and has expressly refused to cooperate with the filing of the instant application.

The above-identified application and papers have been reviewed and found in compliance with 37 CFR 1.47(a). In view thereof, this application is hereby accorded Rule 1.47(a) status.

Petitioner is advised however, that the fee for a petition under 37 CFR 1.47 is set at $200 not $130 as indicated in the petition. However, pursuant to the authorization included with the petition to charge additional fees as necessary, the petition fee in the amount of $200, as well as the surcharge amount and the extension of time fees, have all been charged to deposit account no. 09-0435.

Thus, as provided in Rule 1.47c, this Office will forward notice of this application's filing to the non-signing inventor at the address given in the petition. Notice of the filing of this application will also be published in the Official Gazette.

This matter is being referred to the Office of Patent Application Processing for further pre-examination processing.

Telephone inquiries concerning this matter may be directed to the undersigned Petitions Attorney at (571) 272-3212.

Patricia Faison-Ball

Patricia Faison-Ball
Senior Petitions Attorney
Office of Petitions

UNITED STATES PATENT AND TRADEMARK OFFICE

Commissioner for Patents
United States Patent and Trademark Office
P.O. Box 1450
Alexandria, VA 22313-1450
www.uspto.gov

VOLPE AND KOENIG, P.C.
DEPT. ICC
UNITED PLAZA
30 SOUTH 17TH STREET
PHILADELPHIA PA 19103

MAILED
OCT 25 2011
OFFICE OF PETITIONS

In re Application of	:	
Saad Ahmad et al.	:	
Application No. 13/034,472	:	ON PETITION
Filed: February 24, 2011	:	
Attorney Docket No. IDC-10355US02	:	

This is in response to the REQUEST FOR RECONSIDERATION OF PETITION UNDER 37 C.F.R. §1.47(a) TO ACCEPT DECLARATION ON BEHALF OF INVENTOR WHO CANNOT BE REACHED filed October 13, 2011.

A petition under 37 CFR 1.47(a) was filed October 6, 2011 and was granted in a decision mailed October 13, 2011 because joint inventor Zaid Al-Khatib refuses to execute the declaration.

Comes now petitioner with the instant petition and a Declaration signed by Mr. Al-Khatib requesting that the Declaration of Mr. All-Khatib be accepted out-of-time or, in the alternative, that the original Petition be granted.

In view of the October 6, 2011 petition having been granted on October 13, 2011, this renewed petition filed October 13, 2011 is **DISMISSED** as involving moot issues.

No further consideration of the petition under 37 CFR 1.47(a) is necessary and need not be returned to this office for any further consideration.

This matter will be referred to the Office of Patent Application Processing for further pre-examination processing.

Telephone inquiries related to this decision should be directed to the undersigned Petitions Attorney at (571) 272-3212.

Patricia Faison-Ball

Patricia Faison-Ball
Senior Petitions Attorney
Office of Petitions

UNITED STATES PATENT AND TRADEMARK OFFICE

UNITED STATES DEPARTMENT OF COMMERCE
United States Patent and Trademark Office
Address: COMMISSIONER FOR PATENTS
P.O. Box 1450
Alexandria, Virginia 22313-1450
www.uspto.gov

APPLICATION NO.	FILING DATE	FIRST NAMED INVENTOR	ATTORNEY DOCKET NO.	CONFIRMATION NO.
13/034,495	02/24/2011	Daigo Suzuki	8073P1110	1893

7590 11/07/2011
BLAKELY SOKOLOFF TAYLOR & ZAFMAN LLP
1279 OAKMEAD PARKWAY
SUNNYVALE, CA 94085-4040

EXAMINER
THOMPSON, TIMOTHY J

ART UNIT	PAPER NUMBER
2835	

MAIL DATE	DELIVERY MODE
11/07/2011	PAPER

DECISION GRANTING PETITION UNDER 37 CFR 1.138(d)

The declaration of express abandonment is recognized

This is in response to the petition under 37 CFR 1.138(d), requesting for a refund of any previously paid search fee and excess claims fee in the above-identified application.

The petition is granted.

The express abandonment is recognized. Any previously paid search fee and excess claims fee are hereby refunded.

Telephone inquiries should be directed to the Office of Data Management at (571) 272-4200.

Patent Publication Branch
Office of Data Management

FORM PET651G (Rev. 08/07)

Doc Code: PET.GREEN
Document Description: Petition for Green Tech Pilot

PTO/SB/420 (11-10)
Approved for use through 01/31/2011. OMB 0651-0062
U.S. Patent and Trademark Office; U. S. DEPARTMENT OF COMMERCE
Under the Paperwork Reduction Act of 1995, no persons are required to respond to a collection of information unless it displays a valid OMB control number.

PETITION TO MAKE SPECIAL UNDER THE GREEN TECHNOLOGY PILOT PROGRAM

Attorney Docket Number: A0120.0003-00US	Application Number (if known): 13034620	Filing date: February 24, 2011
First Named Inventor: Zhenjiang LI		
Title: RING-OPENING POLYMERIZATION OF CYCLIC COMPOUNDS CATALYZED BY CARBENE DERIVATIVES		

APPLICANT HEREBY REQUESTS TO PARTICIPATE IN THE GREEN TECHNOLOGY PILOT PROGRAM FOR THE ABOVE-IDENTIFIED APPLICATION. See Instruction Sheet on page 2.

This petition must be timely filed electronically using the USPTO electronic filing system, EFS-Web.

1. By filing this petition:

   Applicant is requesting early publication: Applicant hereby requests early publication under 37 CFR 1.219 and the publication fee set forth in 37 CFR 1.18(d) accompanies this request.

2. By filing this petition: applicant is agreeing to make an election without traverse in a telephonic interview and elect an invention that meets the eligibility requirements for the Green Technology Pilot Program, if the Office determines that the claims are not obviously directed to a single invention. See Instruction Sheet.

3. This request is accompanied by statements of special status for the eligibility requirement.

4. The application contains no more than three (3) independent claims and twenty (20) total claims.

5. The application does not contain any multiple dependent claims.

6. Other attachments: _____

Signature /Allen Xue/	Date March 18, 2011
Name (Print/Typed) Allen (Zhi Yang) Xue	Registration Number 56,474

Note: *Signatures of all the inventors or assignees of record of the entire interest or their representative(s) are required in accordance with 37 CFR 1.33 and 11.18. Please see 37 CFR 1.4(d) for the form of the signature. If necessary, submit multiple forms for more than one signature see below*.*

☒ *Total of one forms are submitted.

The information is required to obtain or retain a benefit by the public which is to file (and by the USPTO to process) an application. Confidentiality is governed by 35 U.S.C. 122 and 37 CFR 1.11 and 1.14. This collection is estimated to take 12 hours to complete, including gathering, preparing, and submitting the completed application form to the USPTO. Time will vary depending upon the individual case. Any comments on the amount of time you require to complete this form and/or suggestions for reducing this burden, should be sent to the Chief Information Officer, U.S. Patent and Trademark Office, U.S. Department of Commerce, P.O. Box 1450, Alexandria, VA 22313-1450. DO NOT SEND FEES OR COMPLETED FORMS TO THIS ADDRESS. **SEND TO: Commissioner for Patents, P.O. Box 1450, Alexandria, VA 22313-1450.**

If you need assistance in completing the form, call 1-800-PTO-9199 and select option 2.

Under the Paperwork Reduction Act of 1995, no persons are required to respond to a collection of information unless it displays a valid OMB control number.

Instruction Sheet for Petition to Make Special Under the Green Technology Pilot Program

(Not to be Submitted to the USPTO)

The following is a summary of the requirements (for more information see the notices (i) "Pilot Program for Green Technologies Including Greenhouse Gas Reduction," (ii) "Elimination of Classification Requirement in the Green Technology Pilot Program," and (iii) "Expansion and Extension of the Green Technology Pilot Program," available on the USPTO web site at http://www.uspto.gov/patents/init_events/green_tech.jsp):

1) The application must be a non-reissue, non-provisional utility application filed under 35 U.S.C. 111 (a), or an international application that has entered the national stage in compliance with 35 U.S.C. 371, irrespective of the filing date of the application. Reexamination proceedings are excluded from this pilot program.

2) The application must contain three or fewer independent claims and twenty or fewer total claims. The application must not contain any multiple dependent claims. For an application that contains more than three independent claims or twenty total claims, or multiple dependent claims, applicant must file a preliminary amendment in compliance with 37 CFR 1.121 to cancel the excess claims and/or the multiple dependent claims at the time the petition to make special is filed.

3) The claims must be directed to a single invention that materially enhances the quality of the environment, or that materially contributes to: (1) the discovery or development of renewable energy resources; (2) the more efficient utilization and conservation of energy resources; or (3) green house gas emission reduction (see the eligibility requirements of sections II and III of the notice (i) cited above). The petition must include a statement that, if the USPTO determines that the claims are directed to multiple inventions (e.g., in a restriction requirement), applicant will agree to make an election without traverse in a telephonic interview, and elect an invention that meets the eligibility requirements in section II or III of the notice (i) cited above.

4) The petition to make special must be timely filed electronically using the USPTO electronic filing system, EFS-Web, and selecting the document description of "Petition for Green Tech Pilot" on the EFS-Web screen. Applicant should use form PTO/SB/420, which is available as a Portable Document Format (PDF) fillable form in EFS-Web and on the USPTO Web site.

5) The petition to make special must be filed at least one day prior to the date that a first Office action (which may be an Office action containing only a restriction requirement) appears in the Patent Application Information Retrieval (PAIR) system. Applicant may check the status of the application using PAIR.

6) The petition to make special must be accompanied by a request for early publication in compliance with 37 CFR 1.219 and the publication fee set forth in 37 CFR 1.18(d).

Privacy Act Statement

The **Privacy Act of 1974 (P.L. 93-579)** requires that you be given certain information in connection with your submission of the attached form related to a patent application or patent. Accordingly, pursuant to the requirements of the Act, please be advised that: (1) the general authority for the collection of this information is 35 U.S.C. 2(b)(2); (2) furnishing of the information solicited is voluntary; and (3) the principal purpose for which the information is used by the U.S. Patent and Trademark Office is to process and/or examine your submission related to a patent application or patent. If you do not furnish the requested information, the U.S. Patent and Trademark Office may not be able to process and/or examine your submission, which may result in termination of proceedings or abandonment of the application or expiration of the patent.

The information provided by you in this form will be subject to the following routine uses:

1. The information on this form will be treated confidentially to the extent allowed under the Freedom of Information Act (5 U.S.C. 552) and the Privacy Act (5 U.S.C 552a). Records from this system of records may be disclosed to the Department of Justice to determine whether disclosure of these records is required by the Freedom of Information Act.
2. A record from this system of records may be disclosed, as a routine use, in the course of presenting evidence to a court, magistrate, or administrative tribunal, including disclosures to opposing counsel in the course of settlement negotiations.
3. A record in this system of records may be disclosed, as a routine use, to a Member of Congress submitting a request involving an individual, to whom the record pertains, when the individual has requested assistance from the Member with respect to the subject matter of the record.
4. A record in this system of records may be disclosed, as a routine use, to a contractor of the Agency having need for the information in order to perform a contract. Recipients of information shall be required to comply with the requirements of the Privacy Act of 1974, as amended, pursuant to 5 U.S.C. 552a(m).
5. A record related to an International Application filed under the Patent Cooperation Treaty in this system of records may be disclosed, as a routine use, to the International Bureau of the World Intellectual Property Organization, pursuant to the Patent Cooperation Treaty.
6. A record in this system of records may be disclosed, as a routine use, to another federal agency for purposes of National Security review (35 U.S.C. 181) and for review pursuant to the Atomic Energy Act (42 U.S.C. 218(c)).
7. A record from this system of records may be disclosed, as a routine use, to the Administrator, General Services, or his/her designee, during an inspection of records conducted by GSA as part of that agency's responsibility to recommend improvements in records management practices and programs, under authority of 44 U.S.C. 2904 and 2906. Such disclosure shall be made in accordance with the GSA regulations governing inspection of records for this purpose, and any other relevant (*i.e.*, GSA or Commerce) directive. Such disclosure shall not be used to make determinations about individuals.
8. A record from this system of records may be disclosed, as a routine use, to the public after either publication of the application pursuant to 35 U.S.C. 122(b) or issuance of a patent pursuant to 35 U.S.C. 151. Further, a record may be disclosed, subject to the limitations of 37 CFR 1.14, as a routine use, to the public if the record was filed in an application which became abandoned or in which the proceedings were terminated and which application is referenced by either a published application, an application open to public inspection or an issued patent.
9. A record from this system of records may be disclosed, as a routine use, to a Federal, State, or local law enforcement agency, if the USPTO becomes aware of a violation or potential violation of law or regulation.

PATENT
Attorney Docket No. A0120.0003-00US

IN THE UNITED STATES PATENT AND TRADEMARK OFFICE

In re Application of: Zhenjiang LI et al.	)	Group Art Unit: 1762
	)	
Application No.: 13/034,620	)	Examiner: Not yet assigned
	)	
Filed: February 24, 20011	)	Confirmation No.: 1149
	)	
For: RING-OPENING POLYMERIZATION OF CYCLIC COMPOUNDS CATALYZED BY CARBENE DERIVATIVES	)	***VIA EFS WEB***

Commissioner for Patents
P.O. Box 1450
Alexandria, VA 22313-1450

Petition to Make Special Under MPEP § 708.02
- Accelerated Examination under the Pilot Program for Green Technologies

Sir:

Applicants hereby request that Application Serial No. 13/034,620 be advanced out of order under 37 CFR § 1.102 as it pertains to enhancing the quality of the environment. In particular, the claimed invention relates to a new method for ring-opening polymerization of cyclic compounds, such as lactide. Such ring-opening polymerization is traditionally catalyzed by tin-containing compounds, which is toxic. The present application discloses reactions that avoided using tin-containing compounds. Furthermore, one of the products of the disclosed reactions is polylactic acid, which is a type of biodegradable polymer. Because it is biodegradable, polylactic acid can be used for making disposable plastic goods without causing long-lasting plastic pollution. Therefore, the method disclosed and claimed in the present

application as well as the end product of the claimed invention materially improve the quality of the environment.

For at least reasons set forth above, Applicants respectfully request the petition be granted.

Respectfully submitted,

Anova Law Group, PLLC

Dated: March 18, 2011

By: /Allen Xue/
Allen (Zhi Yang) Xue
Reg. No. 56,474

UNITED STATES PATENT AND TRADEMARK OFFICE

UNITED STATES DEPARTMENT OF COMMERCE
United States Patent and Trademark Office
Address: COMMISSIONER FOR PATENTS
P.O. Box 1450
Alexandria, Virginia 22313-1450
www.uspto.gov

APPLICATION NO.	FILING DATE	FIRST NAMED INVENTOR	ATTORNEY DOCKET NO.	CONFIRMATION NO.
13/034,620	02/24/2011	Zhenjiang Li	A0120.0003-00US	1149

95483 7590 05/03/2011
Anova Law Group, PLLC
8230 Boone Blvd, Suite 347
Vienna, VA 22182

EXAMINER
LISTVOYB, GREGORY

ART UNIT	PAPER NUMBER
1765	

NOTIFICATION DATE	DELIVERY MODE
05/03/2011	ELECTRONIC

Please find below and/or attached an Office communication concerning this application or proceeding.

The time period for reply, if any, is set in the attached communication.

Notice of the Office communication was sent electronically on above-indicated "Notification Date" to the following e-mail address(es):

contact@anovalaw.com
zhiyangxue@gmail.com
wenyetan@gmail.com

UNITED STATES PATENT AND TRADEMARK OFFICE

Commissioner for Patents
United States Patent and Trademark Office
P.O. Box 1450
Alexandria, VA 22313-1450
www.uspto.gov

Anova Law Group, PLLC
8230 Boone Blvd, Suite 347
Vienna VA 22182

5/3/11

In re Application of	:	
Li et al.	:	DECISION ON PETITION
Application No. 13/034,620	:	TO MAKE SPECIAL UNDER
Filed: 2/24/2011	:	THE GREEN TECHNOLOGY
Attorney Docket No. **A0120.0003-00US**	:	PILOT PROGRAM

This is a decision on the petition under 37 CFR 1.102, filed 3/18/2011, to make the above-identified application special under the pilot program for applications pertaining to Green Technologies as set forth in 74 Federal Register Notice 64666 (December 8, 2009) and amended by 75 Federal Register Notice 28554 (May 21, 2010) and 75 Federal Register Notice 69049 (November 10, 2010).

The petition is **DISMISSED**.

If reconsideration of this decision is desired, a petition for reconsideration must be filed within ONE (1) MONTH OR THIRTY (30) DAYS from the mail date of this decision, whichever is longer. No extension of this time limit can be granted under 37 CFR 1.136(a) or (b). The petition for reconsideration should include an exhaustive attempt to provide the lacking item(s) noted below, since, after a decision on the petition for reconsideration, no further reconsideration or review of the matter will be undertaken by the Director.

A grantable petition to make an application special under 37 CFR 1.102 and the pilot program as set forth in 74 FR 64666 must be directed to a nonprovisional application filed under 35 USC 111(a) or be a national stage entry under 35 USC 371, exclusive of any reissue applications.

In order to qualify for special status, the following requirements must be met. 1) The application must have no more than 3 independent claims and no more than 20 total claims. 2) The application must not contain any multiple dependent claims. 3) The petition must state the basis for seeking special status, i.e., the claimed invention either: A) materially enhances the quality of the environment or B) materially contributes to: i) the discovery or development of renewable energy resources, ii) the more efficient utilization and conservation of energy resources, or iii) greenhouse gas emission reduction. 4) If the disclosure is not clear on its face that the claimed invention materially contributes under category (A) or (B), the petition must be accompanied by a statement by the applicant, assignee, or an attorney/agent registered to practice before the

Office explaining how the materiality standard is met. 5) A statement that applicant will agree to make an election without traverse in a telephonic interview if a restriction requirement is made by the examiner. 6) The petition to make special must be filed electronically. 7) The petition must be filed at least one day prior to the date that a first Office Action appears in the Patent Application Information Retrieval (PAIR) system. 8) The petition must be accompanied by a request for early publication in compliance with 37 CFR 1.219 and include the publication fee as set forth in 37 CFR 1.18(d).

The requirement for a fee for consideration of the petition to make special for applications pertaining to Green Technologies has been waived.

The petition lacks item(s) 4.

In regard to item 4, petitioner should note that the instant petition includes a statement identifying the basis for the special status (i.e., whether the instant invention (1) materially enhances the quality of the environment or materially contributes to (2) development of renewable energy resources or energy conservation, or (3) greenhouse gas reduction) as required by sections II and III of the notice. However, as stated in the notice, applicant must also provide a statement pertaining to the materiality standard if the application disclosure is not clear on its face as to the materiality of the basis for the special status of the invention. It is not agreed that the application on its face meets that materiality standard.

Applicants argue that the instant invention relates to the ring-opening polymerization of cyclic compounds, such as lactide. It is further argued that one of the products of the disclosed reaction is polylactic acid. It is also stated that polylactic acid can be used for making disposable plastic goods. The materiality standard does not permit an applicant to speculate how an end user might specifically apply the invention in a manner that could materially contribute to (1) materially enhancing the quality of the environment or materially contributing to (2) development of renewable energy resources or energy conservation, or (3) greenhouse gas reduction.

Any reconsideration of this decision should be submitted through the USPTO electronic filing system, EFS-Web, and selecting the document description of "Petition for Green Tech Pilot" on the EFS-Web screen.

Telephone inquiries concerning this decision should be directed to Tom Dunn at 571-272-1171.

The application is being forwarded to the Technology Center Art Unit 1765 for action in its regular turn.

/Tom Dunn/

Tom Dunn
Quality Assurance Specialist
Technology Center 1700

UNITED STATES PATENT AND TRADEMARK OFFICE

Commissioner for Patents
United States Patent and Trademark Office
P.O. Box 1450
Alexandria, VA 22313-1450
www.uspto.gov

THOMAS LEE FILLIOS, SR.
30 SOUTH BRCMEN STREET
EAST BOSTON MA 02128

MAILED
SEP 30 2011
OFFICE OF PETITIONS

In re Application of	:	
Thomas L. Fillios	:	
Application No. 13/034,626	:	DECISION ON PETITION
Filed: February 24, 2011	:	TO MAKE SPECIAL UNDER
Attorney Docket No.	:	37 CFR 1.102(c)(1)
	:	

This is a decision on the petition under 37 CFR 1.102(c)(1), filed September 19, 2011, to make the above-identified application special based on applicant's age as set forth in M.P.E.P. § 708.02, Section IV.

The petition is **GRANTED**.

A grantable petition to make an application special under 37 CFR 1.102(c)(1) and MPEP § 708.02, Section IV: Applicant's Age must be accompanied by evidence showing that at least one of the applicants is 65 years of age, or more, such as a birth certificate or a statement by applicant. No fee is required

The instant petition includes a statement by inventor Thomas L. Fillios and a photocopy of driver's license, attesting to his/her age. The above-identified application has been accorded "special" status.

Telephone inquiries concerning this decision should be directed to Kimberly Inabinet at 571-272-4618.

All other inquiries concerning either the examination or status of the application should be directed to the Technology Center.

The application is being forwarded to the Technology Center Art Unit 3748 for action on the merits commensurate with this decision.

/Kimberly Inabinet/

Kimberly Inabinet
Petitions Examiner
Office of Petitions

PTO/SB/20PCT-KR (06-10)
Approved for use through 01/31/2012. OMB 0651-0058
U.S. Patent and Trademark Office; U. S. DEPARTMENT OF COMMERCE
Under the Paperwork Reduction Act of 1995, no persons are required to respond to a collection of information unless it displays a valid OMB control number.

REQUEST FOR PARTICIPATION IN THE PATENT COOPERATION TREATY - PATENT PROSECUTION HIGHWAY (PCT-PPH) PILOT PROGRAM BETWEEN THE KOREAN INTELLECTUAL PROPERTY OFFICE (KIPO) AND THE USPTO

Application No:	13/034643	Filing date:	2011-02-24
First Named Inventor:	Coleman		
Title of the Invention:	Waveplate compensation in projection polarization conversion system		

THIS REQUEST FOR PARTICIPATION IN THE PCT-PPH PILOT PROGRAM ALONG WITH THE REQUIRED DOCUMENTS MUST BE SUBMITTED VIA EFS-WEB. INFORMATION REGARDING EFS-WEB IS AVAILABLE AT HTTP://WWW.USPTO.GOV/EBC/EFS_HELP.HTML

APPLICANT HEREBY REQUESTS PARTICIPATION IN THE PCT-PPH PROGRAM AND PETITIONS TO MAKE THE ABOVE-IDENTIFIED APPLICATION SPECIAL UNDER THE PCT-PPH PROGRAM.

The above-identified application is (1) a national stage entry of the corresponding PCT application, or (2) a national stage entry of another PCT application which claims priority to the corresponding PCT application, or (3) a national application that claims domestic/ foreign priority to the corresponding PCT application, or (4) a national application which forms the basis for the priority claim in the corresponding PCT application, or (5) a continuing application of a U.S. application that satisfies one of (1) to (4) above, or (6) a U.S. application that claims domestic benefit to a U.S. provisional application which forms the basis for the priority claim in the corresponding PCT application.

The corresponding PCT application number(s) is/are: PCT/US11/26131

The international filing date of the corresponding PCT application(s) is/are: 2011-02-24

I. List of Required Documents:

a. **A copy of the latest international work product (WO/ISA, WO/IPEA, or IPER) in the above–identified corresponding PCT application(s)**

- [x] Is attached.
- [ ] Is not attached because the document is already in the U.S. application.

b. **A copy of all claims which were indicated as having novelty, inventive step and industrial applicability in the above-identified corresponding PCT application(s).**

- [x] Is attached.
- [ ] Is not attached because the document is already in the U.S. application.

c. **English translations of the documents in a. and b. above are attached (if the documents are not in the English language). A statement that the English translation is accurate is attached for the document in b. above.**

This collection of information is required by 35 U.S.C. 119, 37 CFR 1.55, and 37 CFR 1.102(d). The information is required to obtain or retain a benefit by the public, which is to file (and by the USPTO to process) an application. Confidentiality is governed by 35 U.S.C. 122 and 37 CFR 1.11 and 1.14. This collection is estimated to take 2 hours to complete, including gathering, preparing, and submitting the completed application form to the USPTO. Time will vary depending upon the individual case. Any comments on the amount of time you require to complete this form and/or suggestions for reducing this burden should be sent to the Chief Information Officer, U.S. Patent and Trademark Office, U.S. Department of Commerce, P.O. Box 1450, Alexandria, VA 22313-1450. DO NOT SEND FEES OR COMPLETED FORMS TO THIS ADDRESS.

Approved for use through 01/31/2012. OMB 0651-0058
U.S.Patent and Trademark Office; U.S. DEPARTMENT OF COMMERCE
Under the Paperwork Reduction Act of 1995, no persons are required to respond to a collection of information unless it displays a valid OMB control number.

REQUEST FOR PARTICIPATION IN THE PCT-PPH PILOT PROGRAM BETWEEN THE KIPO AND THE USPTO

(continued)

Application No.:	13/034643
First Named Inventor:	Coleman

d. **(1) An information disclosure statement listing the documents cited in the international work products (ISR, WO/ISA, WO/IPEA, IPER) of the corresponding PCT application.**

- [✔] Is attached
- [ ] Has already been filed in the above-identified U.S. application on _____

(2) Copies of all documents (except) for U.S. patents or U.S. patent application publications)

- [✔] Are attached.
- [ ] Have already been filed in the above-identified U.S. application on _____

II. Claims Correspondence Table:

Claims in US Application	Patentable Claims in the corresponding PCT Application	Explanation regarding the correspondence
1-20	1-20	Claims from the PCT correspond exactly to claims in the U.S.

III. All the claims in the US application sufficiently correspond to the patentable claims in the corresponding PCT application.

Signature /Charles C. Yang, Reg. No. 62059/	Date January 26, 2012
Name (Print/Typed) Charles C. Yang	Registration Number 62059

Privacy Act Statement

The **Privacy Act of 1974 (P.L. 93-579)** requires that you be given certain information in connection with your submission of the attached form related to a patent application or patent. Accordingly, pursuant to the requirements of the Act, please be advised that: (1) the general authority for the collection of this information is 35 U.S.C. 2(b)(2); (2) furnishing of the information solicited is voluntary; and (3) the principal purpose for which the information is used by the U.S. Patent and Trademark Office is to process and/or examine your submission related to a patent application or patent. If you do not furnish the requested information, the U.S. Patent and Trademark Office may not be able to process and/or examine your submission, which may result in termination of proceedings or abandonment of the application or expiration of the patent.

The information provided by you in this form will be subject to the following routine uses:

1. The information on this form will be treated confidentially to the extent allowed under the Freedom of Information Act (5 U.S.C. 552) and the Privacy Act (5 U.S.C 552a). Records from this system of records may be disclosed to the Department of Justice to determine whether disclosure of these records is required by the Freedom of Information Act.
2. A record from this system of records may be disclosed, as a routine use, in the course of presenting evidence to a court, magistrate, or administrative tribunal, including disclosures to opposing counsel in the course of settlement negotiations.
3. A record in this system of records may be disclosed, as a routine use, to a Member of Congress submitting a request involving an individual, to whom the record pertains, when the individual has requested assistance from the Member with respect to the subject matter of the record.
4. A record in this system of records may be disclosed, as a routine use, to a contractor of the Agency having need for the information in order to perform a contract. Recipients of information shall be required to comply with the requirements of the Privacy Act of 1974, as amended, pursuant to 5 U.S.C. 552a(m).
5. A record related to an International Application filed under the Patent Cooperation Treaty in this system of records may be disclosed, as a routine use, to the International Bureau of the World Intellectual Property Organization, pursuant to the Patent Cooperation Treaty.
6. A record in this system of records may be disclosed, as a routine use, to another federal agency for purposes of National Security review (35 U.S.C. 181) and for review pursuant to the Atomic Energy Act (42 U.S.C. 218(c)).
7. A record from this system of records may be disclosed, as a routine use, to the Administrator, General Services, or his/her designee, during an inspection of records conducted by GSA as part of that agency's responsibility to recommend improvements in records management practices and programs, under authority of 44 U.S.C. 2904 and 2906. Such disclosure shall be made in accordance with the GSA regulations governing inspection of records for this purpose, and any other relevant (*i.e.*, GSA or Commerce) directive. Such disclosure shall not be used to make determinations about individuals.
8. A record from this system of records may be disclosed, as a routine use, to the public after either publication of the application pursuant to 35 U.S.C. 122(b) or issuance of a patent pursuant to 35 U.S.C. 151. Further, a record may be disclosed, subject to the limitations of 37 CFR 1.14, as a routine use, to the public if the record was filed in an application which became abandoned or in which the proceedings were terminated and which application is referenced by either a published application, an application open to public inspection or an issued patent.
9. A record from this system of records may be disclosed, as a routine use, to a Federal, State, or local law enforcement agency, if the USPTO becomes aware of a violation or potential violation of law or regulation.

(12) INTERNATIONAL APPLICATION PUBLISHED UNDER THE PATENT COOPERATION TREATY (PCT)

(19) World Intellectual Property Organization
International Bureau

(43) International Publication Date
1 September 2011 (01.09.2011)

PCT

(10) International Publication Number
WO 2011/106567 A2

(51) International Patent Classification:
G02B 27/28 (2006.01) *G03B 35/00* (2006.01)
G02B 5/30 (2006.01)

(21) International Application Number:
PCT/US2011/026131

(22) International Filing Date:
24 February 2011 (24.02.2011)

(25) Filing Language: English

(26) Publication Language: English

(30) Priority Data:
61/307,786 24 February 2010 (24.02.2010) US

(71) Applicant *(for all designated States except US)*: **MOTHEW, Neil** [US/US]; Reald Inc., 100 North Crescent Drive, Suite 120, Beverly Hills, CA 90210 (US).

(72) Inventors; and
(75) Inventors/Applicants *(for US only)*: **COLEMAN, David, A.** [US/US]; 100 North Crescent Drive, Suite 120, Beverly Hills, CA 90210 (US). **SCHUCK, Miller, H.** [US/US]; 100 North Crescent Drive, Suite 120, Beverly Hills, CA 90210 (US). **SHARP, Gary, D.** [US/US]; 100 North Crescent Drive, Suite 120, Beverly Hills, CA 90210 (US). **GILMAN, Scott, E.** [US/US]; 100 North Crescent Drive, Suite 120, Beverly Hills, CA 90210 (US).

(74) Agents: **MOTHEW, Neil, G.J.** et al.; Baker & McKenzie LLP, 2001 Ross Avenue, Suite 2300, Dallas, TX 75201 (US).

(81) Designated States *(unless otherwise indicated, for every kind of national protection available)*: AE, AG, AL, AM, AO, AT, AU, AZ, BA, BB, BG, BH, BR, BW, BY, BZ, CA, CH, CL, CN, CO, CR, CU, CZ, DE, DK, DM, DO, DZ, EC, EE, EG, ES, FI, GB, GD, GE, GH, GM, GT, HN, HR, HU, ID, IL, IN, IS, JP, KE, KG, KM, KN, KP, KR, KZ, LA, LC, LK, LR, LS, LT, LU, LY, MA, MD, ME, MG, MK, MN, MW, MX, MY, MZ, NA, NG, NI, NO, NZ, OM, PE, PG, PH, PL, PT, RO, RS, RU, SC, SD, SE, SG, SK, SL, SM, ST, SV, SY, TH, TJ, TM, TN, TR, TT, TZ, UA, UG, US, UZ, VC, VN, ZA, ZM, ZW.

(84) Designated States *(unless otherwise indicated, for every kind of regional protection available)*: ARIPO (BW, GH, GM, KE, LR, LS, MW, MZ, NA, SD, SL, SZ, TZ, UG, ZM, ZW), Eurasian (AM, AZ, BY, KG, KZ, MD, RU, TJ, TM), European (AL, AT, BE, BG, CH, CY, CZ, DE, DK, EE, ES, FI, FR, GB, GR, HR, HU, IE, IS, IT, LT, LU,

[Continued on next page]

(54) Title: WAVEPLATE COMPENSATION IN PROJECTION POLARIZATION CONVERSION SYSTEM

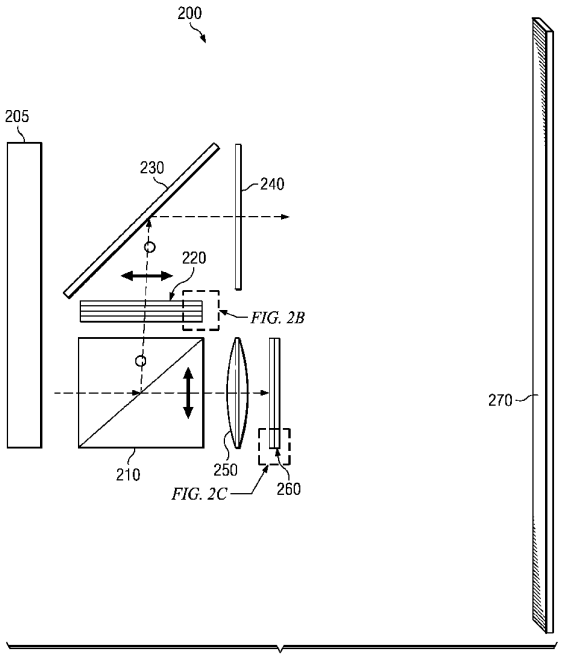

FIG. 2A

(57) Abstract: Three dimensional projection systems may be single projector or multiple projector systems. These 3D projection systems may include a polarization conversion system (PCS). The PCS may be designed for relatively small throw ratios and thus, may be designed to accommodate the small throw ratios. The PCS may include a polarizing beam splitter, a first optical stack, a reflector and a second quarter wave retarder. The first optical stack may include a rotator, a polarizer, a polarization switch and a first quarter wave retarder. The PCS may receive light from a projector and the PBS may direct the light toward the first optical stack. The light may be converted to a different polarization state as it passes through the first optical stack. The converted light may then be re-directed by a reflecting element to the second quarter wave retarder. The second quarter wave retarder may convert linearly polarized light to circularly polarized light.

WO 2011/106567 A2

Claims

What is claimed is:

1. A polarization conversion system comprising:

a polarizing beam splitter (PBS) operable to receive incoming light and separate the incoming light into a first light bundle with a first state of polarization (SOP) and a second light bundle with a second state of polarization (SOP), wherein the first SOP is orthogonal to the second SOP;

a first optical stack operable to receive the first light bundle from the PBS, wherein the first optical stack comprises a rotator, a first polarizer, a first polarization switch, and a first quarter wave retarder;

a reflector operable to receive the first light bundle from the first optical stack; and

a second quarter wave retarder operable to receive the first light bundle from the mirror.

2. The polarization conversion system of claim 1 further comprising a lens set operable to receive the second light bundle from the PBS.

3. The polarization conversion system of claim 2, further comprising a second optical stack operable to receive the second light bundle from the lens set, wherein the second optical stack further comprises a second polarizer and a second polarization switch.

4. The polarization conversion system of claim 1, wherein the PBS is a cube PBS.

5. The polarization conversion system of claim 1, wherein the first quarter wave retarder has an approximately +45 degree configuration relative to the optic axis of the first polarizer.

6. The polarization conversion system of claim 5, wherein the second quarter wave retarder has an approximately -45 degree configuration relative to the optic axis of the first polarizer.

7. The polarization conversion system of claim 1, wherein the first light bundle is S-polarized light and wherein the second light bundle is P-polarized light.

8. The polarization conversion system of claim 1, wherein the PBS is a wire grid PBS.

9. The polarization conversion system of claim 1, wherein the PBS is a retarder based PBS.

10. The polarization conversion system of claim 1, wherein the rotator is an achromatic half-wave plate.

11. The polarization conversion system of claim 3, wherein the first polarization switch and the second polarization switch are substantially synchronized to alternately project left and right eye images.

12. A waveplate compensation method for providing a polarization conversion system, the method comprising:

receiving incoming light at a polarizing beam splitter (PBS) wherein the PBS separates the incoming light into a first light bundle and a second light bundle;

receiving the first light bundle from the PBS at a first optical stack wherein the first optical stack further comprises, a rotator, a first polarizer, a first polarization switch and a first quarter wave retarder;

receiving the first light bundle from the first optical stack at a reflecting element; and

receiving the first light bundle from the reflecting element at a second quarter wave retarder.

13. The waveplate compensation method of claim 12, wherein the first light bundle has a first state of polarization (SOP) and the second light bundle has a second state of polarization (SOP) further wherein the first SOP is orthogonal to the second SOP.

14. The waveplate compensation method of claim 12, further comprising receiving the second light bundle from the PBS at a lens set.

15. The waveplate compensation method of claim 12, and a second optical stack operable to receive the second light bundle from the lens set, wherein the second optical stack further comprises a second polarizer and a second polarization switch.

16. The waveplate compensation method of claim 12, wherein the first light bundle is S-polarized light and the second light bundle is P-polarized light.

17. The waveplate compensation method of claim 12, wherein the rotator rotates the first light bundle by 90 degrees relative to the optic axis.

18. The waveplate compensation method of claim 12, wherein the first quarter wave retarder has an optic axis orientation of at least one of an approximately +45 degree orientation relative to the plane of incidence and an approximately -45 degree orientation relative to the plane of incidence.

19. The waveplate compensation method of claim 12, wherein the second quarter wave retarder converts the first light bundle from linearly polarized light to circularly polarized light.

20. A projection system comprising:

a projector operable to provide light in the direction of a projection screen; and

a polarization conversion system operable to receive light from the projector, wherein the polarization conversion system further comprises:

a polarizing beam splitter (PBS) operable to receive incoming light and separate the incoming light into a first light bundle with a first state of polarization (SOP) and a second light bundle with a second state of polarization (SOP), wherein the first SOP is orthogonal to the second SOP;

an optical stack operable to receive the first light bundle from the PBS, wherein the optical stack further comprises, a rotator, a polarizer, a polarization switch and a first quarter wave retarder;

a reflector operable to receive the first light bundle from the optical stack; and

a second quarter wave retarder operable to receive the first light bundle from the reflector.

UNITED STATES PATENT AND TRADEMARK OFFICE

Commissioner for Patents
United States Patent and Trademark Office
P.O. Box 1450

MAILED
MAR 21 2012
OFFICE OF PETITIONS

REALD Inc. - Patent Department
by Baker & McKenzie LLP
2001 Ross Avenue, Suite 2300
Dallas TX 75201

In re Application of
David A. COLEMAN et al.
Application No. 13/034,643
Filed: February 24, 2011
Atty. Docket No.: 95194936.273001
For: WAVEPLATE COMPENSATION IN PROJECTION POLARIZATION CONVERSION SYSTEM

: DECISION ON REQUEST TO
: PARTICIPATE IN PCT-PPH PROGRAM
: AND PETITION TO MAKE SPECIAL
: UNDER 37 CFR 1.102(a)

This is a decision on the request to participate in the PCT Patent Prosecution Highway (PCT-PPH) program and the petition under 37 CFR 1.102(a), filed January 26, 2012, to make the above-identified application special.

The request and petition are **GRANTED.**

A grantable request to participate in the PCT –PPH program and petition to make special under 37 CFR 1.102(a) require:

(1) the U.S. application must have an eligible relationship to one or more PCT application where the ISA or IPEA are the JPO, EPO, KIPO, IPAU, Russia, Spain, Finland, Austria, or USPTO;

(2) at least one claim in the PCT application has novelty, inventive step, and industrial applicability and must be free of any observations in Box VIII in the latest work product in the international stage or applicant must identify and explain why the claim(s) is/are not subject to the observation in Box VIII;

(3) applicant must submit a copy of the claim(s) from the PCT application(s) that have novelty, inventive step, and industrial applicability along with an English translation thereof and a statement that the English translation is accurate, if the claims are not in the English language;

(4) all the claims in the U.S. application must sufficiently correspond or be amended to sufficiently correspond to the claim(s) that have novelty, inventive step, and industrial applicability in the PCT application(s);

(5) examination of the U.S. application has not begun;

(6) applicant must submit a copy of the latest international work product from the PCT application indicating that the claim(s) have novelty, inventive step, and industrial applicability along with an English translation thereof;

(7) applicant must submit an IDS listing the documents cited by the PCT examiner in the international work product along with copies of documents except U.S. patents or U.S. patent application publications; and

(8) applicant is required to submit a claims correspondence table in English which indicates how all the claims in the U.S. application correspond to the claims indicated as having novelty, inventive step, and industrial applicability in the latest international work product.

The request to participate in the PCT-PPH program and petition comply with the above requirements. Accordingly, the above-identified application has been accorded "special" status.

Telephone inquiries concerning this decision should be directed to Robert DeWitty, Petitions Attorney, Office of Petitions (571-272-8427). All other inquiries concerning the examination or status of the application is accessible in the PAIR system at http://www.uspto.gov/ebc.index.html.

This application will be forwarded to Technology Center Art Unit 2878 for action commensurate with this decision.

David Bucci
Petitions Examiner
Office of Petitions

UNITED STATES PATENT AND TRADEMARK OFFICE

UNITED STATES DEPARTMENT OF COMMERCE
United States Patent and Trademark Office
Address: COMMISSIONER FOR PATENTS
P.O. Box 1450
Alexandria, Virginia 22313-1450
www.uspto.gov

APPLICATION NO.	FILING DATE	FIRST NAMED INVENTOR	ATTORNEY DOCKET NO.	CONFIRMATION NO.
13/034,710	02/25/2011	Michael M. Witzmann	2010068-US2	1335

69289 7590 05/12/2011
COLOPLAST A/S
Attention: Corporate Patents
Holtedam 1
DK-3050 Humlebaek,
DENMARK

EXAMINER

ART UNIT	PAPER NUMBER
3735	

NOTIFICATION DATE	DELIVERY MODE
05/12/2011	ELECTRONIC

Please find below and/or attached an Office communication concerning this application or proceeding.

The time period for reply, if any, is set in the attached communication.

Notice of the Office communication was sent electronically on above-indicated "Notification Date" to the following e-mail address(es):

patent@coloplast.com
dkbvd@coloplast.com

UNITED STATES PATENT AND TRADEMARK OFFICE

Commissioner for Patents
United States Patent and Trademark Office
P.O. Box 1450
Alexandria, VA 22313-1450
www.uspto.gov

COLOPLAST A/S
Attention: Corporate Patents
Holtedam 1
DK-3050 Humlebaek DK DENMARK

In re Application of	:	
WITZMANN, MICHAEL M. et al	:	DECISION ON REQUEST TO
Application No. 13/034,710	:	PARTICIPATE IN PATENT
Filed: Feb. 25, 2011	:	PROSECUTION HIGHWAY
Attorney Docket No. 2010068-US2	:	PILOT PROGRAM AND PETITION
For: INCONTINENCE TREATMENT	:	TO MAKE SPECIAL UNDER
DEVICE	:	37 CFR 1.102(a)

This is a decision on the request to participate in the Patent Prosecution Highway (PPH) pilot program under 37 CFR 1.102(a), filed Feb. 25, 2011, to make the above-identified application special.

The request and petition are granted.

A grantable request to participate in the PPH pilot program and petition to make special require:

(1) The U.S. application must validly claim priority under 35 U.S.C. 119(a) to one or more applications filed in the DKPTO;
(2) Applicant must submit a copy of the allowable/patentable claim(s) from the DKPTO application(s);
(3) All the claims in the U.S. application must sufficiently correspond or be amended to sufficiently correspond to the allowable/patentable claim(s) in the DKPTO application(s);
(4) Examination of the U.S. application has not begun;
(5) Applicant must submit a copy of all the office actions from each of the DKPTO application(s) containing the allowable/patentable claim(s); and
(6) Applicant must submit an IDS listing the documents cited by the DKPTO examiner in the DKPTO office action along with copies of documents except U.S. patents or U.S. patent application publications.

The request to participate in the PPH pilot program and petition comply with the above requirements. Receipt of the IDS statement is acknowledged. Accordingly, the above-identified application has been accorded "special" status.

Telephone inquiries concerning this decision should be directed to Henry C. Yuen, at 571-272-4856.

All other inquiries concerning the examination or status of the application should be directed to Chuck Marmor, SPE of Art Unit 3735 and 571-272-4730.

The application will be forwarded and docketed to an examiner for action on the merits commensurate with this decision. The applicant is reminded that the foreign priority claim must be perfected during the course of the examination.

Petition is **granted**.

/Henry C. Yuen/

Henry C. Yuen, Special Programs Examiner
Technology Center 3700 – Mechanical Engineering,
Manufacturing and Products
571-272-4856

UNITED STATES PATENT AND TRADEMARK OFFICE

Commissioner for Patents
United States Patent and Trademark Office
P.O. Box 1450

MAILED

DEC 13 2011

OFFICE OF PETITIONS

LOWE HAUPTMAN HAM & BERNER, LLP
1700 DIAGONAL ROAD
SUITE 300
ALEXANDRIA VA 22314

In re Application of	: DECISION ON REQUEST TO
Akihiko NAGAO et al.	: PARTICIPATE IN PPH PROGRAM
Application No. 13/034,734	: AND PETITION TO MAKE SPECIAL
Filed: February 25, 2011	: UNDER 37 CFR 1.102(a)
Atty. Docket No.: 4952-059 (FFA-2535)	:
For: FEEDER FOR MACHINE TOOL	:

This is a decision on the request to participate in the Patent Prosecution Highway (PPH) program and the petition under 37 CFR 1.102(a), filed October 19, 2011 to make the above-identified application special.

The petition is **DISMISSED**.

A grantable request to participate in the PPH (patent prosecution highway) program and petition to make special require:

(1) the U.S. application must validly claim priority under 35 U.S.C. 119(a) to one or more applications filed in the JPO (Japanese Patent Office);

(2) applicant must submit a copy of the allowable/patentable claim(s) from the JPO application(s) along with an English translation thereof and a statement that the English translation is accurate;

(3) all the claims in the U.S. application must sufficiently correspond or be amended to sufficiently correspond to the allowable/patentable claim(s) in the JPO application(s);

(4) examination of the U.S. application has not begun;

(5) applicant must submit a copy of all the office actions from each of the JPO application(s) containing the allowability/patentable claim(s) along with an English translation thereof and a statement that the English translation is accurate;

(6) applicant must submit an IDS listing the documents cited by the JPO examiner in the JPO office action along with copies of documents except U.S. patents or U.S. patent application publications; and

Requirements (1), and (4), and (6) through (8) above are considered to have been met. However, the request to participate in the PPH program and petition fail to meet requirement (2), (3), and (5).

Regarding the requirement of condition (2), applicant has failed to submit a copy of the allowable/patentable claims from the JPO application. Whereas applicant asserts that the amended claims correspond to the claims in the JPO application, there is no indication from the JPO that any one claim in the JPO application is allowable.

Regarding the requirement of condition (3), it cannot be determined if requirement (3) has been met since the Office action from the JPO does not indicate that there are any allowable claims in the JPO application.

Regarding the requirement of condition (5), it cannot be determined if requirement (5) has been met since the Office action from the JPO does not indicate that there are any allowable claims in the JPO application.

Applicant is given **ONE** opportunity with a time period of **ONE MONTH** or **THIRTY DAYS**, whichever is longer, from the mailing date of this decision to correct the deficiencies. **NO EXTENSION OF TIME UNDER 37 CFR 1.136 IS PERMITTED.** If the deficiencies are not corrected within the time period given, the application will await action in its regular turn.

Response must be filed via the Electronic Filing System (EFS) using the document description: Petition to make special under Patent Pros. Hwy. Any preliminary amendments and IDS submitted with the PPH documents must be separately indexed as a preliminary amendment and IDS, respectively.

Telephone inquiries concerning this decision should be directed to Robert DeWitty, Petition Attorney, Office of Petitions at 571-272-8427.

All other inquiries concerning the examination or status of the application is accessible in the PAIR system at http://www.uspto.gov/ebc/index.html.

David Bucci
Petitions Examiner
Office of Petitions

UNITED STATES PATENT AND TRADEMARK OFFICE

Commissioner for Patents
United States Patent and Trademark Office
P.O. Box 1450

MAILED
JAN 30 2012
OFFICE OF PETITIONS

LOWE HAUPTMAN HAM & BERNER, LLP
1700 DIAGONAL ROAD
SUITE 300
ALEXANDRIA VA 22314

In re Application of	: DECISION ON REQUEST TO
Akihiko NAGAO et al.	: PARTICIPATE IN PPH PROGRAM
Application No. 13/034,734	: AND PETITION TO MAKE SPECIAL
Filed: February 25, 2011	: UNDER 37 CFR 1.102(a)
Atty. Docket No.: 4952-059 (FFA-2535)	:
For: FEEDER FOR MACHINE TOOL	:

This is a decision on the renewed request to participate in the Patent Prosecution Highway (PPH) program and the petition under 37 CFR 1.102(a), filed January 10, 2012 to make the above-identified application special.

The petition is **GRANTED**.

A grantable request to participate in the PPH (patent prosecution highway) program and petition to make special require:

(1) the U.S. application is a Paris Convention application which either validly claims priority under 35 U.S.C. 119(a) and 37 CFR 1.55 to one or more applications filed in the JPO (Japanese Patent Office) or claims priority to a PCT application that contains no priority claims. Alternatively, it can be a national stage application under the PCT which validly claims priority to an application filed in the JPO or claims priority to a PCT application that contains no priority claims. It can also be a "bypass application" filed under 35 U.S.C. 111(a) which validly claims benefit under 35 U.S.C. 120 to a PCT application, which PCT application validly claims priority to an application filed in the JPO or claims priority to a PCT application that contains no priority claims, or contains no priority claim;

(2) applicant must submit a copy of the allowable/patentable claim(s) from the JPO application(s) along with an English translation thereof and a statement that the English translation is accurate;

(3) all the claims in the U.S. application must sufficiently correspond or be amended to sufficiently correspond to the allowable/patentable claim(s) in the JPO application(s);

(4) examination of the U.S. application has not begun;

(5) applicant must submit a copy of all the office actions from each of the JPO application(s) containing the allowability/patentable claim(s) along with an English translation thereof and a statement that the English translation is accurate; and

(6) applicant must submit an IDS listing the documents cited by the JPO examiner in the JPO office action along with copies of documents except U.S. patents or U.S. patent application publications.

The request to participate in the PPH program and petition comply with the above requirements. Accordingly, the above-identified application has been accorded "special" status.

Telephone inquiries concerning this decision should be directed to Robert DeWitty, Petition Attorney, Office of Petitions at 571-272-8427.

All other inquiries concerning the examination or status of the application is accessible in the PAIR system at http://www.uspto.gov/ebc/index.html.

This application will be forwarded to Technology Center Art Unit 3726 for action commensurate with this decision.

Thurman K Page

David Bucci
Petitions Examiner
Office of Petitions

PTO/SB/20PCT-KR (06-10)
Approved for use through 01/31/2012. OMB 0651-0058
U.S. Patent and Trademark Office; U. S. DEPARTMENT OF COMMERCE
Under the Paperwork Reduction Act of 1995, no persons are required to respond to a collection of information unless it displays a valid OMB control number.

REQUEST FOR PARTICIPATION IN THE PATENT COOPERATION TREATY - PATENT PROSECUTION HIGHWAY (PCT-PPH) PILOT PROGRAM BETWEEN THE KOREAN INTELLECTUAL PROPERTY OFFICE (KIPO) AND THE USPTO

Application No:	13034748	Filing date:	2011-02-25
First Named Inventor:	Jon H. Bechtel		
Title of the Invention:	AUTOMATIC VEHICLE EQUIPMENT MONITORING, WARNING, AND CONTROL SYSTEM		

THIS REQUEST FOR PARTICIPATION IN THE PCT-PPH PILOT PROGRAM ALONG WITH THE REQUIRED DOCUMENTS MUST BE SUBMITTED VIA EFS-WEB. INFORMATION REGARDING EFS-WEB IS AVAILABLE AT HTTP://WWW.USPTO.GOV/EBC/EFS_HELP.HTML

APPLICANT HEREBY REQUESTS PARTICIPATION IN THE PCT-PPH PROGRAM AND PETITIONS TO MAKE THE ABOVE-IDENTIFIED APPLICATION SPECIAL UNDER THE PCT-PPH PROGRAM.

The above-identified application is (1) a national stage entry of the corresponding PCT application, or (2) a national stage entry of another PCT application which claims priority to the corresponding PCT application, or (3) a national application that claims domestic/ foreign priority to the corresponding PCT application, or (4) a national application which forms the basis for the priority claim in the corresponding PCT application, or (5) a continuing application of a U.S. application that satisfies one of (1) to (4) above, or (6) a U.S. application that claims domestic benefit to a U.S. provisional application which forms the basis for the priority claim in the corresponding PCT application.

The corresponding PCT application number(s) is/are: PCT/US2011/026145

The international filing date of the corresponding PCT application(s) is/are: 25 February 2011

I. List of Required Documents:

a. **A copy of the latest international work product (WO/ISA, WO/IPEA, or IPER) in the above–identified corresponding PCT application(s)**

☐ Is attached.

☑ Is not attached because the document is already in the U.S. application.

b. **A copy of all claims which were indicated as having novelty, inventive step and industrial applicability in the above-identified corresponding PCT application(s).**

☐ Is attached.

☑ Is not attached because the document is already in the U.S. application.

c. **English translations of the documents in a. and b. above are attached (if the documents are not in the English language). A statement that the English translation is accurate is attached for the document in b. above.**

This collection of information is required by 35 U.S.C. 119, 37 CFR 1.55, and 37 CFR 1.102(d). The information is required to obtain or retain a benefit by the public, which is to file (and by the USPTO to process) an application. Confidentiality is governed by 35 U.S.C. 122 and 37 CFR 1.11 and 1.14. This collection is estimated to take 2 hours to complete, including gathering, preparing, and submitting the completed application form to the USPTO. Time will vary depending upon the individual case. Any comments on the amount of time you require to complete this form and/or suggestions for reducing this burden should be sent to the Chief Information Officer, U.S. Patent and Trademark Office, U.S. Department of Commerce, P.O. Box 1450, Alexandria, VA 22313-1450. DO NOT SEND FEES OR COMPLETED FORMS TO THIS ADDRESS.

Approved for use through 01/31/2012. OMB 0651-0058
U.S.Patent and Trademark Office; U.S. DEPARTMENT OF COMMERCE
Under the Paperwork Reduction Act of 1995, no persons are required to respond to a collection of information unless it displays a valid OMB control number.

REQUEST FOR PARTICIPATION IN THE PCT-PPH PILOT PROGRAM BETWEEN THE KIPO AND THE USPTO

(continued)

Application No.:	13034748
First Named Inventor:	Jon H. Bechtel

d. **(1) An information disclosure statement listing the documents cited in the international work products (ISR, WO/ISA, WO/IPEA, IPER) of the corresponding PCT application.**

☐ Is attached

☑ Has already been filed in the above-identified U.S. application on 2011-11-10

(2) Copies of all documents (except) for U.S. patents or U.S. patent application publications)

☐ Are attached.

☑ Have already been filed in the above-identified U.S. application on 2011-11-10

II. Claims Correspondence Table:

Claims in US Application	Patentable Claims in the corresponding PCT Application	Explanation regarding the correspondence
1-86	1-86	Claims 2-8, 10-11, 14, 17-18, 20-22, 32, 34-35, 38-39, 41, 43-52, 55-56, 61, 63-66 are only dependent on Claim 1
		Claims 72-79 are only dependent on claim 70
		Claims 81-82 are only dependent on claim 80

III. All the claims in the US application sufficiently correspond to the patentable claims in the corresponding PCT application.

Signature /Scott P. Ryan/	Date 2011-11-10
Name (Print/Typed) Scott P. Ryan	Registration Number 59535

Privacy Act Statement

The **Privacy Act of 1974 (P.L. 93-579)** requires that you be given certain information in connection with your submission of the attached form related to a patent application or patent. Accordingly, pursuant to the requirements of the Act, please be advised that: (1) the general authority for the collection of this information is 35 U.S.C. 2(b)(2); (2) furnishing of the information solicited is voluntary; and (3) the principal purpose for which the information is used by the U.S. Patent and Trademark Office is to process and/or examine your submission related to a patent application or patent. If you do not furnish the requested information, the U.S. Patent and Trademark Office may not be able to process and/or examine your submission, which may result in termination of proceedings or abandonment of the application or expiration of the patent.

The information provided by you in this form will be subject to the following routine uses:

1. The information on this form will be treated confidentially to the extent allowed under the Freedom of Information Act (5 U.S.C. 552) and the Privacy Act (5 U.S.C 552a). Records from this system of records may be disclosed to the Department of Justice to determine whether disclosure of these records is required by the Freedom of Information Act.
2. A record from this system of records may be disclosed, as a routine use, in the course of presenting evidence to a court, magistrate, or administrative tribunal, including disclosures to opposing counsel in the course of settlement negotiations.
3. A record in this system of records may be disclosed, as a routine use, to a Member of Congress submitting a request involving an individual, to whom the record pertains, when the individual has requested assistance from the Member with respect to the subject matter of the record.
4. A record in this system of records may be disclosed, as a routine use, to a contractor of the Agency having need for the information in order to perform a contract. Recipients of information shall be required to comply with the requirements of the Privacy Act of 1974, as amended, pursuant to 5 U.S.C. 552a(m).
5. A record related to an International Application filed under the Patent Cooperation Treaty in this system of records may be disclosed, as a routine use, to the International Bureau of the World Intellectual Property Organization, pursuant to the Patent Cooperation Treaty.
6. A record in this system of records may be disclosed, as a routine use, to another federal agency for purposes of National Security review (35 U.S.C. 181) and for review pursuant to the Atomic Energy Act (42 U.S.C. 218(c)).
7. A record from this system of records may be disclosed, as a routine use, to the Administrator, General Services, or his/her designee, during an inspection of records conducted by GSA as part of that agency's responsibility to recommend improvements in records management practices and programs, under authority of 44 U.S.C. 2904 and 2906. Such disclosure shall be made in accordance with the GSA regulations governing inspection of records for this purpose, and any other relevant (*i.e.*, GSA or Commerce) directive. Such disclosure shall not be used to make determinations about individuals.
8. A record from this system of records may be disclosed, as a routine use, to the public after either publication of the application pursuant to 35 U.S.C. 122(b) or issuance of a patent pursuant to 35 U.S.C. 151. Further, a record may be disclosed, subject to the limitations of 37 CFR 1.14, as a routine use, to the public if the record was filed in an application which became abandoned or in which the proceedings were terminated and which application is referenced by either a published application, an application open to public inspection or an issued patent.
9. A record from this system of records may be disclosed, as a routine use, to a Federal, State, or local law enforcement agency, if the USPTO becomes aware of a violation or potential violation of law or regulation.

UNITED STATES PATENT AND TRADEMARK OFFICE

UNITED STATES DEPARTMENT OF COMMERCE
United States Patent and Trademark Office
Address: COMMISSIONER FOR PATENTS
P.O. Box 1450
Alexandria, Virginia 22313-1450
www.uspto.gov

APPLICATION NO.	FILING DATE	FIRST NAMED INVENTOR	ATTORNEY DOCKET NO.	CONFIRMATION NO.
13/034,748	02/25/2011	Jon H. Bechtel	AUTO 2010 1130	1419

28167 7590 11/23/2011
BRIAN J. REES
GENTEX CORPORATION
600 NORTH CENTENNIAL STREET
ZEELAND, MI 49464

EXAMINER

ART UNIT	PAPER NUMBER
2622	

NOTIFICATION DATE	DELIVERY MODE
11/23/2011	ELECTRONIC

Please find below and/or attached an Office communication concerning this application or proceeding.

The time period for reply, if any, is set in the attached communication.

Notice of the Office communication was sent electronically on above-indicated "Notification Date" to the following e-mail address(es):

uspto@gentex.com
ptomail@priceheneveld.com

UNITED STATES PATENT AND TRADEMARK OFFICE

Commissioner for Patents
United States Patent and Trademark Office
P.O. Box 1450
Alexandria, VA 22313-1450
www.uspto.gov

BRIAN J. REES
GENTEX CORPORATION
600 NORTH CENTENNIAL STREET
ZEELAND MI 49464

In re Application of	
BECHTEL et al.	**: DECISION ON REQUEST TO**
Application No.: 13/034,748	**: PARTICIPATE IN THE PATENT**
Filed: 25 February 2011	**: PROSECUTION HIGHWAY**
Attorney Docket No.: AUTO 2010 1130	**: PROGRAM AND PETITION**
For: AUTOMATIC VEHICLE	**: TO MAKE SPECIAL UNDER**
EQUIPMENT MONITORING,	**: 37 CFR 1.102(a)**
WARNING, AND CONTROL SYSTEM	

This is a decision on the request to participate in the PCT Patent Prosecution Highway (PCT-PPH) pilot program and the petition under 37 CFR 1.102(a), filed on 10 November 2011, to make the above-identified application special.

The request and petition are **DISMISSED**.

Discussion

A grantable request to participate in the PCT-PPH pilot program and petition to make special require:

(1) The U.S. application must have an eligible relationship to one or more PCT applications where the ISA or IPEA are the JPO, EPO, KIPO, IPAU, Russia, Spain, Finland, Austria, or USPTO;

(2) At least one claim in the PCT application has novelty, inventive step, and industrial applicability and must be free of any observations in Box VIII in the latest work product in the international stage or applicant must identify and explain why the claim(s) is/are not subject to the observation in Box VIII;

(3) Applicant must submit a copy of the claim(s) from the PCT application(s) that have novelty, inventive step, and industrial applicability along with an English translation thereof and a statement that the English translation is accurate, if the claims are not in the English language;

(4) All the claims in the U.S. application must sufficiently correspond or be amended to sufficiently correspond to the claim(s) that have novelty, inventive step, and industrial applicability in the PCT application(s);

(5) Examination of the U.S. application has not begun;

(6) Applicant must submit a copy of the latest international work product from the PCT application indicating that the claim(s) have novelty, inventive step, and industrial applicability along with an English translation thereof.

(7) Applicant must submit an IDS listing the documents cited by the PCT examiner in the international work product along with copies of documents except U.S. patents or U.S. patent application publications.

(8) Applicant is required to submit a claims correspondence table in English which indicates how all the claims in the U.S. application correspond to the claims indicated as having novelty, inventive step and industrial applicability in the latest international work product.

Requirements (1), (3-5) and (8) above are considered to have been met. However, the request to participate in the PPH pilot program and petition fail to meet requirement (6).

Regarding requirement (6), applicant has failed to submit a copy of the latest international work product from the PCT application. The searching authority for the PCT was KIPO and the international work product has not been received in the instant application.

Regarding requirements (2) and (7), it cannot be determined if requirements (2) and (7) are met since requirement (6) has not been met.

Applicant is given **ONE** opportunity within a time period of **ONE MONTH or THIRTY DAYS**, whichever is longer, from the mailing date of this decision to correct the deficiencies. **NO EXTENSION OF TIME UNDER 37 CFR 1.136 IS PERMITTED.** If the deficiencies are not corrected with the time period given, the application will await action in its regular turn.

Response must be filed via the Electronic Filing System (EFS) using the document description: Petition to make special under PCT – Patent Pros Hwy. Any preliminary amendments and IDS submitted with the PPH documents must be separately indexed as a preliminary amendment and IDS, respectively.

Telephone inquiries concerning this decision should be directed to Lee W. Young at 571-272-4549.

All other inquiries concerning the examination or status of the application is accessible in the PAIR system at http://www.uspto.gov/ebc/index.html.

Lee W. Young
Quality Assurance Specialist
Technology Center 2600

IN THE UNITED STATES PATENT AND TRADEMARK OFFICE

Art Unit	:	2622
Applicants	:	Jon H. Bechtel et al.
Appln. No.	:	13/034,748
Filing Date	:	February 25, 2011
Confirmation No.	:	1419
For	:	AUTOMATIC VEHICLE EQUIPMENT MONITORING, WARNING, AND CONTROL SYSTEM

Dear Commissioner:

PETITION TO MAKE SPECIAL
UNDER PCT – PATENT PROSECUTION HIGHWAY

In response to the Decision On Request To Participate In Patent Prosecution Highway Pilot Program and Petition To Make Special Under 37 C.F.R. 1.102(d) sent November 23, 2011, Applicant respectfully requests that the Office consider the following remarks in the above identified application.

Remarks begin on page 2 of this paper.

REMARKS

The Decision dismissed Applicant's Petition for Request to Participate in Patent Prosecution Highway Pilot Program and Petition to Make Special Under 37 C.F.R. 1.102(d), and further stated that Applicant's Petition failed to include Item 6, and therefore Items 2 and 7 could not be determined. Applicant has addressed the comments regarding Items 2, 6 and 7 below, and respectfully request reversal of the dismissal of the Petition.

Applicant respectfully submits the ISR (Exhibit 1) for the corresponding PCT application PCT/US2011/026145 is being submitted herewith in a Supplemental IDS. The ISR was inadvertently left off of the IDS submitted on November 10, 2011 with the Petition for Request to Participate in Patent Prosecution Highway Pilot Program for the above referenced application. Applicant respectfully requests that this ISR be accepted into record and considered. As noted in the ISR, claims 1-86 are noted as being novel, having an inventive step, and industrial applicability, and therefore, Applicants respectfully submit that Item 6 is satisfied.

As to Item 2, Applicants respectfully submit their response to the observations in Box. No. VIII of the ISR as follows:

Observation 1: Applicants respectfully submit that the term "approximately" is not vague and unclear under the MPEP and 35 U.S.C. § 112, and therefore, this observation under PCT Article 6 is moot.

Observation 2: Applicants have submitted herewith a preliminary amendment (Exhibit 2), wherein said preliminary amendment amends "said highway markings" to "said lane markings" to correct the antecedent basis.

Observation 3: Applicants respectfully submit that claim 2 in the PCT application is a multiple dependency claim that is dependent upon one of claims 1, 67, 68, and 69, whereas in the present U.S. application claim 2 is only dependent upon claim 1 and therefore the antecedent basis for "oncoming headlight," "diffuse lane marking," and "distant tail lamp" is correct.

Observation 4: Applicants respectfully submit that claim 4 in the PCT application is a multiple dependency claim that is dependent upon one of claims 1, 67, 68, and 69, whereas in the present U.S. application claim 4 is only dependent upon claim 1 and therefore the antecedent basis for "light sources" is correct.

Observation 5: Applicants have submitted herewith a preliminary amendment,

wherein said preliminary amendment amends the claim to correct the antecedent basis.

Observation 6: Applicants have submitted herewith a preliminary amendment, wherein said preliminary amendment amends the claim to correct the antecedent basis.

Observation 7: Applicants have submitted herewith a preliminary amendment, wherein said preliminary amendment amends the claim to correct the antecedent basis.

Observation 8: Applicants have submitted herewith a preliminary amendment, wherein said preliminary amendment amends the claim to correct the antecedent basis.

Observation 9: Applicants respectfully submit that claims 2-8, 10, 11, 14, 17, 18, 20-22, 32, 34, 35, 38, 39, 41, 43-52, 55, 56, 61, and 63-66 in the PCT application are a multiple dependency claims that are dependent upon one of claims 1, 67, 68, and 69, whereas these claims in the present U.S. application are only dependent upon independent claim 1. Therefore, Applicants respectfully submit that this observation is moot.

Observation 10: Applicants respectfully submit that claim 81 in the PCT application is a multiple dependency claim and refers to itself, whereas this claim in the present U.S. application is only dependent upon independent claim 80. Therefore, Applicants respectfully submit that this observation is moot.

With respect to Item 7, Applicants submitted the above mentioned IDS on November 10, 2011 which included the prior art cited by the PCT examiner in the ISR as well as copies of those references. Therefore, Applicants respectfully submit that Item 7 is satisfied. In lieu of these documents, Applicant respectfully submits that items 2, 6 and 7 are now satisfied, and therefore Applicants respectfully request reversal of the dismissal to Participate in the Patent Prosecution Highway.

CONCLUSION

For all of the foregoing reasons, Applicants respectfully submit that Applicants have satisfied all of the elements for the Petition to Participate in the Patent Prosecution Highway using Form PTO/SB/20PCT-KR. If the Office has any questions or comments with respect to this Reply, the Office is encouraged to contact the undersigned at 616.772.1800. Please charge any additional fees and credit any overpayments associated with this Reply to Deposit Account No. 07-1070.

Respectfully submitted,

JON H. BECHTEL ET AL.

December 22, 2011
Date

Scott P. Ryan
Registration No. 59 535
Gentex Corporation
600 North Centennial Street
Zeeland, MI 49467
(616) 772-1800

EXHIBIT 1

PATENT COOPERATION TREATY

From the INTERNATIONAL SEARCHING AUTHORITY

To:

RYAN SCOTT P.

GENTEX CORPORATION 600 NORTH CENTENNIAL ST.
ZEELAND MI 49464 USA

PCT

RECEIVED OCT 31 2011

NOTIFICATION OF TRANSMITTAL OF THE INTERNATIONAL SEARCH REPORT AND THE WRITTEN OPINION OF THE INTERNATIONAL SEARCHING AUTHORITY, OR THE DECLARATION

(PCT Rule 44.1)

	Date of mailing *(day/month/year)* 21 OCTOBER 2011 (21.10.2011)
Applicant's or agent's file reference A20101130T	**FOR FURTHER ACTION** See paragraphs 1 and 4 below
International application No. **PCT/US2011/026145**	International filing date *(day/month/year)* **25 FEBRUARY 2011 (25.02.2011)**
Applicant **GENTEX CORPORATION et al**	

1. ☒ The applicant is hereby notified that the international search report and the written opinion of the International Searching Authority have been established and are transmitted herewith.

   Filing of amendments and statement under Article 19:

   The applicant is entitled, if he so wishes, to amend the claims of the international application (see Rule 46):

   When? The time limit for filing such amendments is normally two months from the date of transmittal of the international search report.

   Where? Directly to the International Bureau of WIPO, 34 chemin des Colombettes 1211 Geneva 20, Switzerland, Facsimile No.: +41 22 338 82 70

   For more detailed instructions, see *PCT Applicant's Guide*, International Phase, paragraphs 9.004 . 9.011.

2. ☐ The applicant is hereby notified that no international search report will be established and that the declaration under Article 17(2)(a) to that effect and the written opinion of the International Searching Authority are transmitted herewith.

3. ☐ **With regard to any protest** against payment of (an) additional fee(s) under Rule 40.2, the applicant is notified that:

   ☐ the protest together with the decision thereon has been transmitted to the International Bureau together with any request to forward the texts of both the protest and the decision thereon to the designated Offices.

   ☐ no decision has been made yet on the protest; the applicant will be notified as soon as a decision is made.

4. **Reminders**

The applicant may submit comments on an informal basis on the written opinion of the International Searching Authority to the International Bureau. The International Bureau will send a copy of such comments to all designated Offices unless an international preliminary examination report has been or is to be established. Following the expiration of 30 months from the priority date, these comments will also be made available to the public.

Shortly after the expiration of **18 months** from the priority date, the international application will be published by the International Bureau. If the applicant wishes to avoid or postpone publication, a notice of withdrawal of the international application, or of the priority claim, must reach the International Bureau before the completion of the technical preparations for international publication (Rules 90bis.1 and 90bis.3).

Within **19 months** from the priority date, but only in respect of some designated Offices, a demand for international preliminary examination must be filed if the applicant wishes to postpone the entry into the national phase **until 30 months** from the priority date (in some Offices even later); otherwise, the applicant must, **within 20 months** from the priority date, perform the prescribed acts for entry into the national phase before those designated Offices.

In respect of other designated Offices, the time limit of **30 months** (or later) will apply even if no demand is filed within 19months.

For details about the applicable time limits, Office by Office, see www.wipo.int/pct/en/texts/time_limits.html and the PCT Applicant's Guide, National Chapters.

Name and mailing address of the ISA/KR Korean Intellectual Property Office Government Complex-Daejeon, 189 Cheongsa-ro, Seo-gu, Daejeon 302-701, Republic of Korea Facsimile No. 82-42-472-7140	Authorized officer COMMISSIONER Telephone No. 82-42-481-8753

* Attention

Copies of the documents cited in the international search report can be searched in the following Korean Intellectual Property Office English website for three months from the date of mailing of the international search report.

http://www.kipo.go.kr/en/ => PCT Services => PCT Services

ID : PCT international application number
PW : **RFYZKQ6V**

Inquiries related to PCT International Search Report or Written Opinion prepared by KIPO as an International Searching Authority can be answered not only by KIPO but also through IPKC (Intellectual Property Korea Center), located in Vienna, VA, which functions as a PCT Help Desk for PCT applicants.

Homepage: http://www.ipkcenter.com
Email: ipkc@ipkcenter.com
Phone: +1 703 388 1066
Fax: +1 703 388 1084

PATENT COOPERATION TREATY

PCT

INTERNATIONAL SEARCH REPORT

(PCT Article 18 and Rules 43 and 44)

Applicant's or agent's file reference A20101130T	FOR FURTHER ACTION	see Form PCT/ISA/220 as well as, where applicable, item 5 below.
International application No. **PCT/US2011/026145**	International filing date *(day/month/year)* **25 FEBRUARY 2011 (25.02.2011)**	(Earliest) Priority Date *(day/month/year)* 26 FEBRUARY 2010 (26.02.2010)
Applicant **GENTEX CORPORATION et al**		

This International search report has been prepared by this International Searching Authority and is transmitted to the applicant according to Article 18. A copy is being transmitted to the International Bureau.

This international search report consists of a total of 16 sheets.

☐ It is also accompanied by a copy of each prior art document cited in this report.

1. **Basis of the report**
   a. With regard to the **language**, the international search was carried out on the basis of :
      ☒ the international application in the language in which it was filed
      ☐ a translation of the international application into _____ , which is the language of a translation furnished for the purposes of international search (Rules 12.3(a) and 23.1(b))
   b. ☐ This international search report has been established taking into account the **rectification of an obvious mistake** authorized by or notified to this Authority under Rule 91 (Rule 43.6*bis*(a)).
   c. ☐ With regard to any **nucleotide and/or amino acid sequence** disclosed in the international application, see Box No. I.
2. ☐ **Certain claims were found unsearchable** (See Box No. II)
3. ☒ **Unity of invention is lacking** (See Box No. III)
4. With regard to the **title**,
   ☒ the text is approved as submitted by the applicant.
   ☐ the text has been established by this Authority to read as follows:
5. With regard to the **abstract**,
   ☒ the text is approved as submitted by the applicant.
   ☐ the text has been established, according to Rule 38.2, by this Authority as it appears in Box No. IV. The applicant may, within one month from the date of mailing of this international search report, submit comments to this Authority.
6. With regard to the drawings,
   a. the figure of the **drawings** to be published with the abstract is Figure No. 9
      ☒ as suggested by the applicant.
      ☐ as selected by this Authority, because the applicant failed to suggest a figure.
      ☐ as selected by this Authority, because this figure better characterizes the invention.
   b. ☐ none of the figure is to be published with the abstract.

INTERNATIONAL SEARCH REPORT

International application No.
PCT/US2011/026145

Box No. II Observations where certain claims were found unsearchable (Continuation of item 2 of first sheet)

This international search report has not been established in respect of certain claims under Article 17(2)(a) for the following reasons:

1. ☐ Claims Nos.:
because they relate to subject matter not required to be searched by this Authority, namely:

2. ☐ Claims Nos.:
because they relate to parts of the international application that do not comply with the prescribed requirements to such an extent that no meaningful international search can be carried out, specifically:

3. ☐ Claims Nos.:
because they are dependent claims and are not drafted in accordance with the second and third sentences of Rule 6.4(a).

Box No. III Observations where unity of invention is lacking (Continuation of item 3 of first sheet)

This International Searching Authority found multiple inventions in this international application, as follows:

Group I. Claims 1-69 directed to an automatic vehicle equipment control system.
Group II. Claims 70-79 directed to a method of generating a lane departure warning.
Group III. Claims 80-86 directed to a method for generating a control signal for vehicle headlamp control.

1. ☐ As all required addtional search fees were timely paid by the applicant, this international search report covers all searchable claims.

2. ☒ As all searchable claims could be searched without effort justifying an additional fee, this Authority did not invite payment of any additional fee.

3. ☐ As only some of the required additional search fees were timely paid by the applicant, this international search report covers only those claims for which fees were paid, specifically claims Nos.:

4. ☐ No required additional search fees were timely paid by the applicant. Consequently, this international search report is restricted to the invention first mentioned in the claims; it is covered by claims Nos.:

Remark on Protest

☐ The additional search fees were accompanied by the applicant's protest and, where applicable, the payment of a protest fee.
☐ The additional search fees were accompanied by the applicant's protest but the applicable protest fee was not paid within the time limit specified in the invitation.
☐ No protest accompanied the payment of additional search fees.

INTERNATIONAL SEARCH REPORT

International application No.
PCT/US2011/026145

A. CLASSIFICATION OF SUBJECT MATTER

B60W 40/02(2006.01)i, H04N 5/225(2006.01)i, B60R 1/00(2006.01)i

According to International Patent Classification (IPC) or to both national classification and IPC

B. FIELDS SEARCHED

Minimum documentation searched (classification system followed by classification symbols)

B60W 40/02; G01V 8/10; B60Q 1/00; H04N 9/07; B60Q 1/14

Documentation searched other than minimum documentation to the extent that such documents are included in the fields searched

Korean utility models and applications for utility models
Japanese utility models and applications for utility models

Electronic data base consulted during the international search (name of data base and, where practicable, search terms used)

eKOMPASS(KIPO internal) & Keywords: vehicle, automatic control system, imager, pixel array, processor, color spectral filter array, lens, headlamp, diffuse lane marking, distant tail lamp

C. DOCUMENTS CONSIDERED TO BE RELEVANT

Category*	Citation of document, with indication, where appropriate, of the relevant passages	Relevant to claim No.
A	JP 2005-534903 A (GENTEX CORPORATION) 17 November 2005 See pages 3-6 and figures 1-3	1-86
A	JP 2002-517348 A (GENTEX CORPORATION) 18 June 2002 See pages 2-6 and figure 3	1-86
A	WO 00-17009 A1 (GENTEX CORPORATION et al.) 30 March 2000 See abstract, pages 4-10 and claims 1-32	1-86
A	JP 05-219511 A (RCA CORPORATION) 27 August 1993 See abstract, pages 4-6 and claim 1	1-86

☐ Further documents are listed in the continuation of Box C.

☒ See patent family annex.

* Special categories of cited documents:
"A" document defining the general state of the art which is not considered to be of particular relevance
"E" earlier application or patent but published on or after the international filing date
"L" document which may throw doubts on priority claim(s) or which is cited to establish the publication date of citation or other special reason (as specified)
"O" document referring to an oral disclosure, use, exhibition or other means
"P" document published prior to the international filing date but later than the priority date claimed
"T" later document published after the international filing date or priority date and not in conflict with the application but cited to understand the principle or theory underlying the invention
"X" document of particular relevance; the claimed invention cannot be considered novel or cannot be considered to involve an inventive step when the document is taken alone
"Y" document of particular relevance; the claimed invention cannot be considered to involve an inventive step when the document is combined with one or more other such documents,such combination being obvious to a person skilled in the art
"&" document member of the same patent family

Date of the actual completion of the international search	Date of mailing of the international search report
20 OCTOBER 2011 (20.10.2011)	**21 OCTOBER 2011 (21.10.2011)**
Name and mailing address of the ISA/KR Korean Intellectual Property Office Government Complex-Daejeon, 189 Cheongsa-ro, Seo-gu, Daejeon 302-701, Republic of Korea Facsimile No. 82-42-472-7140	Authorized officer Park young Keun Telephone No. 82-42-481-5452

INTERNATIONAL SEARCH REPORT

Information on patent family members

International application No.

PCT/US2011/026145

Patent document cited in search report	Publication date	Patent family member(s)	Publication date
JP 2005-534903 A	17.11.2005	AU 1998-93135 A1	05.04.1999
		AU 1998-94812 A1	05.04.1999
		AU 1999-43302 A1	30.12.1999
		AU 1999-55862 A1	10.04.2000
		AU 2001-247611 B2	02.12.2004
		AU 2001-47611 A1	03.10.2001
		AU 2002-337688 A8	14.04.2003
		AU 2002-351338 A1	09.07.2003
		AU 2003-259065 A1	16.02.2004
		CA 2284496 A1	08.10.1998
		CA 2284496 C	29.01.2002
		CA 2301087 A1	25.03.1999
		CA 2301087 C	23.03.2004
		CA 2301303 A1	25.03.1999
		CA 2301303 C	15.08.2006
		CA 2333596 A1	16.12.1999
		CA 2333596 C	13.03.2007
		CA 2343795 A1	30.03.2000
		CA 2343795 C	10.04.2007
		CA 2354093 A1	08.10.1998
		CA 2354093 C	26.09.2006
		CA 2402406 A1	27.09.2001
		CA 2402406 C	22.12.2009
		CA 2438558 A1	12.09.2002
		CA 2438558 C	16.06.2009
		CA 2452068 A1	25.03.1999
		CA 2452068 C	14.09.2004
		CA 2460591 A1	10.04.2003
		CA 2460591 C	27.11.2007
		CA 2465782 A1	03.07.2003
		CA 2487409 A1	05.02.2004
		CA 2487409 C	04.05.2010
		CA 2568055 A1	30.03.2000
		CA 2568055 C	09.11.2010
		CN 1116187 C	30.07.2003
		CN 1192601 C0	09.03.2005
		CN 1270560 A	18.10.2000
		CN 1270560 C0	18.10.2000
		CN 1270736 A0	18.10.2000
		CN 1602260 A	30.03.2005
		CN 1602260 C0	14.05.2008
		EP 0971829 A1	19.01.2000
		EP 0971829 B1	14.11.2001
		EP 1015286 A1	05.07.2000
		EP 1015286 B1	13.08.2003
		EP 1016268 A1	05.07.2000
		EP 1016268 B1	04.12.2002
		EP 1084051 A1	21.03.2001
		EP 1084051 B1	27.08.2003

INTERNATIONAL SEARCH REPORT
Information on patent family members

International application No.
PCT/US2011/026145

Patent document cited in search report	Publication date	Patent family member(s)	Publication date
		EP 1112199 A1	04.07.2001
		EP 1112199 B1	09.01.2008
		EP 1129902 A2	05.09.2001
		EP 1129902 A3	19.09.2001
		EP 1129902 B1	17.12.2003
		EP 1282916 A2	12.02.2003
		EP 1334888 A1	13.08.2003
		EP 1334888 B1	05.07.2006
		EP 1366523 A1	03.12.2003
		EP 1375251 A2	02.01.2004
		EP 1375251 A3	07.01.2004
		EP 1433048 A2	30.06.2004
		EP 1451038 A1	01.09.2004
		EP 1504956 A2	09.02.2005
		EP 1504956 A3	12.07.2006
		EP 1504957 A2	09.02.2005
		EP 1504957 A3	05.07.2006
		EP 1504957 B1	08.10.2008
		EP 1504958 A2	09.02.2005
		EP 1504958 A3	06.06.2007
		EP 1504958 B1	15.04.2009
		EP 1504959 A2	09.02.2005
		EP 1504959 A3	06.06.2007
		EP 1520749 A2	06.04.2005
		EP 1520749 A3	13.06.2007
		EP 1520749 B1	07.04.2010
		EP 1525440 A1	27.04.2005
		EP 1527951 A2	04.05.2005
		EP 1527951 A3	17.05.2006
		JP 03-568210 B2	22.09.2004
		JP 03-660877 B2	15.06.2005
		JP 04-034565 B2	16.01.2008
		JP 04-053498 B2	27.02.2008
		JP 04-073627 B2	09.04.2008
		JP 04-108631 B2	25.06.2008
		JP 04-226775 B2	18.02.2009
		JP 2001-516670 A	02.10.2001
		JP 2001-517035 A	02.10.2001
		JP 2001-519744 A	23.10.2001
		JP 2002-517348 A	18.06.2002
		JP 2002-526317 A	20.08.2002
		JP 2004-189229 A	08.07.2004
		JP 2004-212404 A	29.07.2004
		JP 2004-217209 A	05.08.2004
		JP 2004-500279 A	08.01.2004
		JP 2004-538545 A	24.12.2004
		JP 2005-504964 A	17.02.2005
		JP 2005-512875 A	12.05.2005
		JP 2006-020283 A	19.01.2006
		JP 2007-045407 A	22.02.2007

INTERNATIONAL SEARCH REPORT

Information on patent family members

International application No.

PCT/US2011/026145

Patent document cited in search report	Publication date	Patent family member(s)	Publication date
		JP 2007-238097 A	20.09.2007
		JP 2009-007001 A	15.01.2009
		KR 10-0493581 B1	08.06.2005
		KR 10-0504598 B1	04.08.2005
		KR 10-0511801 B1	05.09.2005
		KR 10-0528469 B1	15.11.2005
		KR 10-0634961 B1	18.10.2006
		KR 10-0666454 B1	09.01.2007
		KR 10-0682067 B1	12.02.2007
		KR 10-0693312 B1	14.03.2007
		KR 10-0710837 B1	24.04.2007
		KR 10-0796698 B1	21.01.2008
		US 05837994A A	17.11.1998
		US 05923027A A	13.07.1999
		US 05990469A A	23.11.1999
		US 06049171A A	11.04.2000
		US 06097024A A	01.08.2000
		US 06130421A A	10.10.2000
		US 2002-0005472 A1	17.01.2002
		US 2002-0043612 A1	18.04.2002
		US 2002-0060522 A1	23.05.2002
		US 2002-0156559 A1	24.10.2002
		US 2002-0195949 A1	26.12.2002
		US 2003-0058346 A1	27.03.2003
		US 2003-0069674 A1	10.04.2003
		US 2003-0107323 A1	12.06.2003
		US 2003-0123705 A1	03.07.2003
		US 2003-0123706 A1	03.07.2003
		US 2003-0138131 A1	24.07.2003
		US 2003-0138132 A1	24.07.2003
		US 2004-0000631 A1	01.01.2004
		US 2004-0008110 A1	15.01.2004
		US 2004-0021853 A1	05.02.2004
		US 2004-0031907 A1	19.02.2004
		US 2004-0034457 A1	19.02.2004
		US 2004-0046103 A1	11.03.2004
		US 2004-0069931 A1	15.04.2004
		US 2004-0144911 A1	29.07.2004
		US 2004-0153225 A1	05.08.2004
		US 2005-0007579 A1	13.01.2005
		US 2005-0073853 A1	07.04.2005
		US 2005-0098712 A1	12.05.2005
		US 2005-0165526 A1	28.07.2005
		US 2005-0218298 A1	06.10.2005
		US 2005-0219852 A1	06.10.2005
		US 2005-0242740 A1	03.11.2005
		US 2006-0018511 A1	26.01.2006
		US 2006-0018512 A1	26.01.2006
		US 2006-0065821 A1	30.03.2006
		US 2006-0091813 A1	04.05.2006

INTERNATIONAL SEARCH REPORT

Information on patent family members

International application No.

PCT/US2011/026145

Patent document cited in search report	Publication date	Patent family member(s)	Publication date
		US 2006-0177098 A1	10.08.2006
		US 2007-0093949 A1	26.04.2007
		US 2007-0194208 A1	23.08.2007
		US 2008-0044062 A1	21.02.2008
		US 2008-0129206 A1	05.06.2008
		US 2008-0195276 A1	14.08.2008
		US 5837994 C1	16.10.2001
		US 6255639 B1	03.07.2001
		US 6262410 B1	17.07.2001
		US 6281632 B1	28.08.2001
		US 6291812 B1	18.09.2001
		US 6429594 B1	06.08.2002
		US 6469739 B1	22.10.2002
		US 6495815 B1	17.12.2002
		US 6587573 B1	01.07.2003
		US 6593698 B2	15.07.2003
		US 6611610 B1	26.08.2003
		US 6631316 B2	07.10.2003
		US 6653614 B2	25.11.2003
		US 6653615 B2	25.11.2003
		US 6681163 B2	20.01.2004
		US 6728393 B2	27.04.2004
		US 6774988 B2	10.08.2004
		US 6853897 B2	08.02.2005
		US 6861809 B2	01.03.2005
		US 6868322 B2	15.03.2005
		US 6906467 B2	14.06.2005
		US 6919548 B2	19.07.2005
		US 6924470 B2	02.08.2005
		US 6928180 B2	09.08.2005
		US 6946639 B2	20.09.2005
		US 6947576 B2	20.09.2005
		US 6947577 B2	20.09.2005
		US 7019275 B2	28.03.2006
		US 7149613 B2	12.12.2006
		US 7199346 B2	03.04.2007
		US 7302326 B2	27.11.2007
		US 7408136 B2	05.08.2008
		US 7432967 B2	07.10.2008
		US 7485844 B2	03.02.2009
		US 7613327 B2	03.11.2009
		US 7630803 B2	08.12.2009
		US 7653215 B2	26.01.2010
		US 7825600 B2	02.11.2010
		WO 00-17009 A1	30.03.2000
		WO 01-70538 A2	27.09.2001
		WO 98-43850 A1	08.10.1998
		WO 99-14088 A1	25.03.1999
		WO 99-14943 A1	25.03.1999
		WO 99-64267 A1	16.12.1999

INTERNATIONAL SEARCH REPORT

Information on patent family members

International application No.

PCT/US2011/026145

Patent document cited in search report	Publication date	Patent family member(s)	Publication date
JP 2002-517348 A	18.06.2002	AU 1998-93135 A1	05.04.1999
		AU 1998-94812 A1	05.04.1999
		AU 1999-43302 A1	30.12.1999
		AU 1999-55862 A1	10.04.2000
		AU 2001-247611 B2	02.12.2004
		AU 2001-47611 A1	03.10.2001
		AU 2002-337688 A8	14.04.2003
		AU 2002-351338 A1	09.07.2003
		AU 2003-259065 A1	16.02.2004
		CA 2284496 A1	08.10.1998
		CA 2284496 C	29.01.2002
		CA 2301087 A1	25.03.1999
		CA 2301087 C	23.03.2004
		CA 2301303 A1	25.03.1999
		CA 2301303 C	15.08.2006
		CA 2333596 A1	16.12.1999
		CA 2333596 C	13.03.2007
		CA 2343795 A1	30.03.2000
		CA 2343795 C	10.04.2007
		CA 2354093 A1	08.10.1998
		CA 2354093 C	26.09.2006
		CA 2402406 A1	27.09.2001
		CA 2402406 C	22.12.2009
		CA 2438558 A1	12.09.2002
		CA 2438558 C	16.06.2009
		CA 2452068 A1	25.03.1999
		CA 2452068 C	14.09.2004
		CA 2460591 A1	10.04.2003
		CA 2460591 C	27.11.2007
		CA 2465782 A1	03.07.2003
		CA 2487409 A1	05.02.2004
		CA 2487409 C	04.05.2010
		CA 2568055 A1	30.03.2000
		CA 2568055 C	09.11.2010
		CN 1116187 C	30.07.2003
		CN 1192601 C0	09.03.2005
		CN 1270560 A	18.10.2000
		CN 1270560 C0	18.10.2000
		CN 1270736 A0	18.10.2000
		CN 1602260 A	30.03.2005
		CN 1602260 C0	14.05.2008
		EP 0971829 A1	19.01.2000
		EP 0971829 B1	14.11.2001
		EP 1015286 A1	05.07.2000
		EP 1015286 B1	13.08.2003
		EP 1016268 A1	05.07.2000
		EP 1016268 B1	04.12.2002
		EP 1084051 A1	21.03.2001
		EP 1084051 B1	27.08.2003
		EP 1112199 A1	04.07.2001

INTERNATIONAL SEARCH REPORT

Information on patent family members

International application No.

PCT/US2011/026145

Patent document cited in search report	Publication date	Patent family member(s)	Publication date
		EP 1112199 B1	09.01.2008
		EP 1129902 A2	05.09.2001
		EP 1129902 A3	19.09.2001
		EP 1129902 B1	17.12.2003
		EP 1282916 A2	12.02.2003
		EP 1334888 A1	13.08.2003
		EP 1334888 B1	05.07.2006
		EP 1366523 A1	03.12.2003
		EP 1375251 A2	02.01.2004
		EP 1375251 A3	07.01.2004
		EP 1433048 A2	30.06.2004
		EP 1451038 A1	01.09.2004
		EP 1504956 A2	09.02.2005
		EP 1504956 A3	12.07.2006
		EP 1504957 A2	09.02.2005
		EP 1504957 A3	05.07.2006
		EP 1504957 B1	08.10.2008
		EP 1504958 A2	09.02.2005
		EP 1504958 A3	06.06.2007
		EP 1504958 B1	15.04.2009
		EP 1504959 A2	09.02.2005
		EP 1504959 A3	06.06.2007
		EP 1520749 A2	06.04.2005
		EP 1520749 A3	13.06.2007
		EP 1520749 B1	07.04.2010
		EP 1525440 A1	27.04.2005
		EP 1527951 A2	04.05.2005
		EP 1527951 A3	17.05.2006
		JP 03-568210 B2	22.09.2004
		JP 03-660877 B2	15.06.2005
		JP 04-034565 B2	16.01.2008
		JP 04-053498 B2	27.02.2008
		JP 04-073627 B2	09.04.2008
		JP 04-108631 B2	25.06.2008
		JP 04-226775 B2	18.02.2009
		JP 2001-516670 A	02.10.2001
		JP 2001-517035 A	02.10.2001
		JP 2001-519744 A	23.10.2001
		JP 2002-526317 A	20.08.2002
		JP 2004-189229 A	08.07.2004
		JP 2004-212404 A	29.07.2004
		JP 2004-217209 A	05.08.2004
		JP 2004-500279 A	08.01.2004
		JP 2004-538545 A	24.12.2004
		JP 2005-504964 A	17.02.2005
		JP 2005-512875 A	12.05.2005
		JP 2005-534903 A	17.11.2005
		JP 2006-020283 A	19.01.2006
		JP 2007-045407 A	22.02.2007
		JP 2007-238097 A	20.09.2007

INTERNATIONAL SEARCH REPORT

Information on patent family members

International application No.

PCT/US2011/026145

Patent document cited in search report	Publication date	Patent family member(s)	Publication date
		JP 2009-007001 A	15.01.2009
		KR 10-0493581 B1	08.06.2005
		KR 10-0504598 B1	04.08.2005
		KR 10-0511801 B1	05.09.2005
		KR 10-0528469 B1	15.11.2005
		KR 10-0634961 B1	18.10.2006
		KR 10-0666454 B1	09.01.2007
		KR 10-0682067 B1	12.02.2007
		KR 10-0693312 B1	14.03.2007
		KR 10-0710837 B1	24.04.2007
		KR 10-0796698 B1	21.01.2008
		US 05837994A A	17.11.1998
		US 05923027A A	13.07.1999
		US 05990469A A	23.11.1999
		US 06049171A A	11.04.2000
		US 06097024A A	01.08.2000
		US 06130421A A	10.10.2000
		US 2002-0005472 A1	17.01.2002
		US 2002-0043612 A1	18.04.2002
		US 2002-0060522 A1	23.05.2002
		US 2002-0156559 A1	24.10.2002
		US 2002-0195949 A1	26.12.2002
		US 2003-0058346 A1	27.03.2003
		US 2003-0069674 A1	10.04.2003
		US 2003-0107323 A1	12.06.2003
		US 2003-0123705 A1	03.07.2003
		US 2003-0123706 A1	03.07.2003
		US 2003-0138131 A1	24.07.2003
		US 2003-0138132 A1	24.07.2003
		US 2004-0000631 A1	01.01.2004
		US 2004-0008110 A1	15.01.2004
		US 2004-0021853 A1	05.02.2004
		US 2004-0031907 A1	19.02.2004
		US 2004-0034457 A1	19.02.2004
		US 2004-0046103 A1	11.03.2004
		US 2004-0069931 A1	15.04.2004
		US 2004-0144911 A1	29.07.2004
		US 2004-0153225 A1	05.08.2004
		US 2005-0007579 A1	13.01.2005
		US 2005-0073853 A1	07.04.2005
		US 2005-0098712 A1	12.05.2005
		US 2005-0165526 A1	28.07.2005
		US 2005-0218298 A1	06.10.2005
		US 2005-0219852 A1	06.10.2005
		US 2005-0242740 A1	03.11.2005
		US 2006-0018511 A1	26.01.2006
		US 2006-0018512 A1	26.01.2006
		US 2006-0065821 A1	30.03.2006
		US 2006-0091813 A1	04.05.2006
		US 2006-0177098 A1	10.08.2006

INTERNATIONAL SEARCH REPORT

Information on patent family members

International application No.
PCT/US2011/026145

Patent document cited in search report	Publication date	Patent family member(s)	Publication date
		US 2007-0093949 A1	26.04.2007
		US 2007-0194208 A1	23.08.2007
		US 2008-0044062 A1	21.02.2008
		US 2008-0129206 A1	05.06.2008
		US 2008-0195276 A1	14.08.2008
		US 5837994 C1	16.10.2001
		US 6255639 B1	03.07.2001
		US 6262410 B1	17.07.2001
		US 6281632 B1	28.08.2001
		US 6291812 B1	18.09.2001
		US 6429594 B1	06.08.2002
		US 6469739 B1	22.10.2002
		US 6495815 B1	17.12.2002
		US 6587573 B1	01.07.2003
		US 6593698 B2	15.07.2003
		US 6611610 B1	26.08.2003
		US 6631316 B2	07.10.2003
		US 6653614 B2	25.11.2003
		US 6653615 B2	25.11.2003
		US 6681163 B2	20.01.2004
		US 6728393 B2	27.04.2004
		US 6774988 B2	10.08.2004
		US 6853897 B2	08.02.2005
		US 6861809 B2	01.03.2005
		US 6868322 B2	15.03.2005
		US 6906467 B2	14.06.2005
		US 6919548 B2	19.07.2005
		US 6924470 B2	02.08.2005
		US 6928180 B2	09.08.2005
		US 6946639 B2	20.09.2005
		US 6947576 B2	20.09.2005
		US 6947577 B2	20.09.2005
		US 7019275 B2	28.03.2006
		US 7149613 B2	12.12.2006
		US 7199346 B2	03.04.2007
		US 7302326 B2	27.11.2007
		US 7408136 B2	05.08.2008
		US 7432967 B2	07.10.2008
		US 7485844 B2	03.02.2009
		US 7613327 B2	03.11.2009
		US 7630803 B2	08.12.2009
		US 7653215 B2	26.01.2010
		US 7825600 B2	02.11.2010
		WO 00-17009 A1	30.03.2000
		WO 01-70538 A2	27.09.2001
		WO 98-43850 A1	08.10.1998
		WO 99-14088 A1	25.03.1999
		WO 99-14943 A1	25.03.1999
		WO 99-64267 A1	16.12.1999

INTERNATIONAL SEARCH REPORT
Information on patent family members

International application No.
PCT/US2011/026145

Patent document cited in search report	Publication date	Patent family member(s)	Publication date
WO 00-17009 A1	30.03.2000	AT 383274 T	15.01.2008
		AT 410332 T	15.10.2008
		AT 428602 T	15.05.2009
		AT 463387 T	15.04.2010
		AU 1998-93135 A1	05.04.1999
		AU 1998-94812 A1	05.04.1999
		AU 1999-43302 A1	30.12.1999
		AU 1999-55862 A1	10.04.2000
		AU 2001-247611 B2	02.12.2004
		AU 2001-47611 A1	03.10.2001
		AU 2002-337688 A8	14.04.2003
		AU 2002-351338 A1	09.07.2003
		AU 2003-259065 A1	16.02.2004
		AU 5586299 A	10.04.2000
		CA 2284496 A1	08.10.1998
		CA 2284496 C	29.01.2002
		CA 2301087 A1	25.03.1999
		CA 2301087 C	23.03.2004
		CA 2301303 A1	25.03.1999
		CA 2301303 C	15.08.2006
		CA 2333596 A1	16.12.1999
		CA 2333596 C	13.03.2007
		CA 2343795 A1	30.03.2000
		CA 2343795 C	10.04.2007
		CA 2354093 A1	08.10.1998
		CA 2354093 C	26.09.2006
		CA 2402406 A1	27.09.2001
		CA 2402406 C	22.12.2009
		CA 2438558 A1	12.09.2002
		CA 2438558 C	16.06.2009
		CA 2452068 A1	25.03.1999
		CA 2452068 C	14.09.2004
		CA 2460591 A1	10.04.2003
		CA 2460591 C	27.11.2007
		CA 2465782 A1	03.07.2003
		CA 2487409 A1	05.02.2004
		CA 2487409 C	04.05.2010
		CA 2568055 A1	30.03.2000
		CA 2568055 C	09.11.2010
		CN 1116187 C	30.07.2003
		CN 1192601 C0	09.03.2005
		CN 1270560 A	18.10.2000
		CN 1270560 C0	18.10.2000
		CN 1270736 A0	18.10.2000
		CN 1602260 A	30.03.2005
		CN 1602260 C0	14.05.2008
		DE 69937956 D1	21.02.2008
		DE 69937956 T2	08.01.2009
		DE 69939714 D1	20.11.2008
		DE 69940748 D1	28.05.2009

INTERNATIONAL SEARCH REPORT

Information on patent family members

International application No.

PCT/US2011/026145

Patent document cited in search report	Publication date	Patent family member(s)	Publication date
		DE 69942235 D1	20.05.2010
		EP 0971829 A1	19.01.2000
		EP 0971829 B1	14.11.2001
		EP 1015286 A1	05.07.2000
		EP 1015286 B1	13.08.2003
		EP 1016268 A1	05.07.2000
		EP 1016268 B1	04.12.2002
		EP 1084051 A1	21.03.2001
		EP 1084051 B1	27.08.2003
		EP 1112199 A1	04.07.2001
		EP 1112199 B1	09.01.2008
		EP 1129902 A2	05.09.2001
		EP 1129902 A3	19.09.2001
		EP 1129902 B1	17.12.2003
		EP 1282916 A2	12.02.2003
		EP 1334888 A1	13.08.2003
		EP 1334888 B1	05.07.2006
		EP 1366523 A1	03.12.2003
		EP 1375251 A2	02.01.2004
		EP 1375251 A3	07.01.2004
		EP 1433048 A2	30.06.2004
		EP 1451038 A1	01.09.2004
		EP 1504956 A2	09.02.2005
		EP 1504956 A3	12.07.2006
		EP 1504957 A2	09.02.2005
		EP 1504957 A3	05.07.2006
		EP 1504957 B1	08.10.2008
		EP 1504958 A2	09.02.2005
		EP 1504958 A3	06.06.2007
		EP 1504958 B1	15.04.2009
		EP 1504959 A2	09.02.2005
		EP 1504959 A3	06.06.2007
		EP 1520749 A2	06.04.2005
		EP 1520749 A3	13.06.2007
		EP 1520749 B1	07.04.2010
		EP 1525440 A1	27.04.2005
		EP 1527951 A2	04.05.2005
		EP 1527951 A3	17.05.2006
		JP 03-568210 B2	22.09.2004
		JP 03-660877 B2	15.06.2005
		JP 04-034565 B2	16.01.2008
		JP 04-053498 B2	27.02.2008
		JP 04-073627 B2	09.04.2008
		JP 04-108631 B2	25.06.2008
		JP 04-226775 B2	18.02.2009
		JP 2001-516670 A	02.10.2001
		JP 2001-517035 A	02.10.2001
		JP 2001-519744 A	23.10.2001
		JP 2002-517348 A	18.06.2002
		JP 2002-526317 A	20.08.2002

INTERNATIONAL SEARCH REPORT

Information on patent family members

International application No.

PCT/US2011/026145

Patent document cited in search report	Publication date	Patent family member(s)	Publication date
		JP 2002-526317 T	20.08.2002
		JP 2004-189229 A	08.07.2004
		JP 2004-212404 A	29.07.2004
		JP 2004-217209 A	05.08.2004
		JP 2004-500279 A	08.01.2004
		JP 2004-538545 A	24.12.2004
		JP 2005-504964 A	17.02.2005
		JP 2005-512875 A	12.05.2005
		JP 2005-534903 A	17.11.2005
		JP 2006-020283 A	19.01.2006
		JP 2007-045407 A	22.02.2007
		JP 2007-238097 A	20.09.2007
		JP 2009-007001 A	15.01.2009
		KR 10-0493581 B1	08.06.2005
		KR 10-0504598 B1	04.08.2005
		KR 10-0511801 B1	05.09.2005
		KR 10-0528469 B1	15.11.2005
		KR 10-0634961 B1	18.10.2006
		KR 10-0666454 B1	09.01.2007
		KR 10-0682067 B1	12.02.2007
		KR 10-0693312 B1	14.03.2007
		KR 10-0710837 B1	24.04.2007
		KR 10-0796698 B1	21.01.2008
		US 05837994A A	17.11.1998
		US 05923027A A	13.07.1999
		US 05990469A A	23.11.1999
		US 06049171A A	11.04.2000
		US 06097024A A	01.08.2000
		US 06130421A A	10.10.2000
		US 2002-0005472 A1	17.01.2002
		US 2002-0043612 A1	18.04.2002
		US 2002-0060522 A1	23.05.2002
		US 2002-0156559 A1	24.10.2002
		US 2002-0195949 A1	26.12.2002
		US 2003-0058346 A1	27.03.2003
		US 2003-0069674 A1	10.04.2003
		US 2003-0107323 A1	12.06.2003
		US 2003-0123705 A1	03.07.2003
		US 2003-0123706 A1	03.07.2003
		US 2003-0138131 A1	24.07.2003
		US 2003-0138132 A1	24.07.2003
		US 2004-0000631 A1	01.01.2004
		US 2004-0008110 A1	15.01.2004
		US 2004-021853 A1	05.02.2004
		US 2004-031907 A1	19.02.2004
		US 2004-034457 A1	19.02.2004
		US 2004-046103 A1	11.03.2004
		US 2004-069931 A1	15.04.2004
		US 2004-144911 A1	29.07.2004
		US 2004-153225 A1	05.08.2004

INTERNATIONAL SEARCH REPORT

Information on patent family members

International application No.

PCT/US2011/026145

Patent document cited in search report	Publication date	Patent family member(s)	Publication date
		US 2005-007579 A1	13.01.2005
		US 2005-073853 A1	07.04.2005
		US 2005-098712 A1	12.05.2005
		US 2005-165526 A1	28.07.2005
		US 2005-218298 A1	06.10.2005
		US 2005-219852 A1	06.10.2005
		US 2005-242740 A1	03.11.2005
		US 2006-018511 A1	26.01.2006
		US 2006-018512 A1	26.01.2006
		US 2006-065821 A1	30.03.2006
		US 2006-091813 A1	04.05.2006
		US 2006-177098 A1	10.08.2006
		US 2007-093949 A1	26.04.2007
		US 2007-194208 A1	23.08.2007
		US 2008-044062 A1	21.02.2008
		US 2008-129206 A1	05.06.2008
		US 2008-195276 A1	14.08.2008
		US 5837994 C1	16.10.2001
		US 6255639 B1	03.07.2001
		US 6262410 B1	17.07.2001
		US 6281632 B1	28.08.2001
		US 6291812 B1	18.09.2001
		US 6429594 B1	06.08.2002
		US 6469739 B1	22.10.2002
		US 6495815 B1	17.12.2002
		US 6587573 B1	01.07.2003
		US 6593698 B2	15.07.2003
		US 6611610 B1	26.08.2003
		US 6631316 B2	07.10.2003
		US 6653614 B2	25.11.2003
		US 6653615 B2	25.11.2003
		US 6681163 B2	20.01.2004
		US 6728393 B2	27.04.2004
		US 6774988 B2	10.08.2004
		US 6853897 B2	08.02.2005
		US 6861809 B2	01.03.2005
		US 6868322 B2	15.03.2005
		US 6906467 B2	14.06.2005
		US 6919548 B2	19.07.2005
		US 6924470 B2	02.08.2005
		US 6928180 B2	09.08.2005
		US 6946639 B2	20.09.2005
		US 6947576 B2	20.09.2005
		US 6947577 B2	20.09.2005
		US 7019275 B2	28.03.2006
		US 7149613 B2	12.12.2006
		US 7199346 B2	03.04.2007
		US 7302326 B2	27.11.2007
		US 7408136 B2	05.08.2008
		US 7432967 B2	07.10.2008

INTERNATIONAL SEARCH REPORT

Information on patent family members

International application No.

PCT/US2011/026145

Patent document cited in search report	Publication date	Patent family member(s)	Publication date
		US 7485844 B2	03.02.2009
		US 7613327 B2	03.11.2009
		US 7630803 B2	08.12.2009
		US 7653215 B2	26.01.2010
		US 7825600 B2	02.11.2010
JP 05-219511 A	27.08.1993	DE 3527275 A1	13.02.1986
		DE 3527275 C2	24.03.1988
		FR 2568739 A1	07.02.1986
		FR 2568739 B1	15.11.1991
		GB 2161671 A	15.01.1986
		GB 2161671 B	16.12.1987
		GB 8518957 00	04.09.1985
		JP 02-706747 B2	17.10.1997
		JP 06-007674 B2	26.01.1994
		JP 1888421 C	07.12.1994
		JP 2706747 B2	28.01.1998
		JP 61-077485 A	21.04.1986
		KR 10-1989-0004224 B1	27.10.1989
		KR 89-0004224 B1	27.10.1989
		US 04630105A A	16.12.1986

PATENT COOPERATION TREATY

From the
INTERNATIONAL SEARCHING AUTHORITY

To:
RYAN SCOTT P.

GENTEX CORPORATION 600 NORTH CENTENNIAL ST.
ZEELAND MI 49464 USA

PCT

WRITTEN OPINION OF THE INTERNATIONAL SEARCHING AUTHORITY

(PCT Rule 43bis.1)

Date of mailing *(day/month/year)* **21 OCTOBER 2011 (21.10.2011)**

Applicant's or agent's file reference
A20101130T

FOR FURTHER ACTION
See paragraph 2 below

International application No.	International filing date *(day/month/year)*	Priority date *(day/month/year)*
PCT/US2011/026145	**25 FEBRUARY 2011 (25.02.2011)**	26 FEBRUARY 2010 (26.02.2010)

International Patent Classification (IPC) or both national classification and IPC

B60W 40/02(2006.01)i, H04N 5/225(2006.01)i, B60R 1/00(2006.01)i

Applicant

GENTEX CORPORATION et al

1. This opinion contains indications relating to the following items:

- [X] Box No. I Basis of the opinion
- [ ] Box No. II Priority
- [ ] Box No. III Non-establishment of opinion with regard to novelty, inventive step and industrial applicability
- [X] Box No. IV Lack of unity of invention
- [X] Box No. V Reasoned statement under Rule 43bis.1(a)(i) with regard to novelty, inventive step or industrial applicability; citations and explanations supporting such statement
- [ ] Box No. VI Certain documents cited
- [ ] Box No. VII Certain defects in the international application
- [X] Box No. VIII Certain observations on the international application

2. **FURTHER ACTION**

If a demand for international preliminary examination is made, this opinion will be considered to be a written opinion of the International Preliminary Examining Authority ("IPEA") except that this does not apply where the applicant chooses an Authority other than this one to be the IPEA and the chosen IPEA has notified the International Bureau under Rule 66.1bis(b) that written opinions of this International Searching Authority will not be so considered.

If this opinion is, as provided above, considered to be a written opinion of the IPEA, the applicant is invited to submit to the IPEA a written reply together, where appropriate, with amendments, before the expiration of 3 months from the date of mailing of Form PCT/ISA/220 or before the expiration of 22 months from the priority date, whichever expires later.
For further options, see Form PCT/ISA/220.

Name and mailing address of the ISA/KR	Date of completion of this opinion	Authorized officer
Korean Intellectual Property Office Government Complex-Daejeon, 189 Cheongsa-ro, Seo-gu, Daejeon 302-701, Republic of Korea Facsimile No. 82-42-472-7140	20 OCTOBER 2011 (20.10.2011)	Park young Keun Telephone No.82-42-481-5452

WRITTEN OPINION OF THE INTERNATIONAL SEARCHING AUTHORITY

International application No.
PCT/US2011/026145

Box No. I Basis of this opinion

1. With regard to the **language**, this opinion has been established on the basis of:

   ☒ the international application in the language in which it was filed

   ☐ a translation of the international application into _____, which is the language of a translation furnished for the purposes of international search (Rules 12.3(a) and 23.1(b))

2. ☐ This opinion has been established taking into account the **rectification of an obvious mistake** authorized by or notified to this Authority under Rule 91 (Rule 43*bis*.1(a))

3. With regard to any **nucleotide and/or amino acid sequence** disclosed in the international application, this opinion has been established on the basis of:

   a. a sequence listing filed or furnished
      ☐ on paper
      ☐ in electronic form

   b. time of filing or furnishing
      ☐ contained in the international application as filed.
      ☐ filed together with the international application in electronic form.
      ☐ furnished subsequently to this Authority for the purposes of search.

4. ☐ In addition, in the case that more than one version or copy of a sequence listing has been filed or furnished, the required statements that the information in the subsequent or additioanl copies is identical to that in the application as filed or does not go beyond the application as filed, as appropriate, were furnished.

5. Additional comments:

WRITTEN OPINION OF THE INTERNATIONAL SEARCHING AUTHORITY	International application No. PCT/US2011/026145

Box No. IV Lack of unity of invention

1. ☐ In response to the invitation (Form PCT/ISA/206) to pay additional fees the applicant has, within the applicable time limit:
   - ☐ paid additional fees
   - ☐ paid additional fees under protest and, where applicable, the protest fee
   - ☐ paid additional fees under protest but the applicable protest fee was not paid
   - ☐ not paid additional fees
2. ☒ This Authority found that the requirement of unity of invention is not complied with and chose not to invite the applicant to pay additional fees.
3. This Authority considers that the requirement of unity of invention in accordance with Rule 13.1, 13.2 and 13.3 is
   - ☐ complied with
   - ☒ not complied with for the following reasons:

This ISA found multiple inventions as follows:
Group I. Claims 1-69 directed to an automatic vehicle equipment control system.
Group II. Claims 70-79 directed to a method of generating a lane departure warning.
Group III. Claims 80-86 directed to a method for generating a control signal for vehicle headlamp control.

The inventions listed as Group I, II and III do not relate to a single general inventive concept under PCT Rule 13.1 because, under PCT Rule 13.2 they lack the same or corresponding special technical features for the following reasons; they are separate inventions with distinct fields of search.

4. Consequently, this opinion has been established in respect of the following parts of the international application :
   - ☒ all parts.
   - ☐ the parts relating to claims Nos. _____

WRITTEN OPINION OF THE INTERNATIONAL SEARCHING AUTHORITY

International application No.
PCT/US2011/026145

Box No. V Reasoned statement under Rule 43bis.1(a)(i) with regard to novelty, inventive step or industrial applicability; citations and explanations supporting such statement

1. Statement

Novelty (N)	Claims	1-86	YES
	Claims	NONE	NO
Inventive step (IS)	Claims	1-86	YES
	Claims	NONE	NO
Industrial applicability (IA)	Claims	1-86	YES
	Claims	NONE	NO

2. Citations and explanations :

Reference is made to the following documents:

D1: JP 2005-534903 A (GENTEX CORPORATION) 17 November 2005
D2: JP 2002-517348 A (GENTEX CORPORATION) 18 June 2002
D3: WO 00-17009 A1 (GENTEX CORPORATION et al.) 30 March 2000
D4: JP 05-219511 A (RCA CORPORATION) 27 August 1993

1. Novelty and Inventive Step

1.1 Claims 1-69

1) An automatic vehicle equipment control system of claim 1 differs from those of D1 to D4 in that it comprises at least one imager configured to acquire a continuous sequence of high dynamic range single frame images, and at least one imager comprising a pixel array; a processor; a color spectral filter array; a lens; wherein imager is configured to capture a non-saturated image of nearby oncoming headlamps and at least one of diffuse lane marking and distant tail lamp in one image frame of continuous sequence of high dynamic range single frame images, and the automatic vehicle equipment control system configured to detect at least one of highway markings and tail lamps and quantify light from oncoming headlamp from data in one image. And it is not obvious to a person skilled in the art by the documents, taken alone or in combination. Therefore, claim 1 meets the requirements of PCT Article 33(2) and (3) with respect to novelty and inventive step.

2) Claims 2-66 are dependent on claim 1 and therefore meet the requirements of PCT Article 33(2) and (3).

3) An automatic vehicle equipment control system of claim 67 differs from those of D1 to D4 in that it comprises at least one imager configured to acquire a continuous sequence of high dynamic range single frame images, and at least one imager comprising a pixel array; a color spectral filter array; a lens; a processor in communication with at least one imager, and configured to process continuous sequence of high dynamic range images, wherein processor is further configured to use color information from pixel of pixel array to enhance yellow colored features in high dynamic range images to detect yellow lane markers. Therefore, claim 67 meets the requirements of PCT Article 33(2) and (3) with respect to novelty and inventive step.

4) An automatic vehicle equipment control system of claim 68 differs from those of D1 to D4 in that it comprises at least one imager configured to acquire a continuous sequence of high dynamic range single frame images, and at least one imager comprising a pixel array; a color spectral filter array; a lens; a processor in communication with at least one imager, wherein processor is further configured to aggregate a plurality of bright pixels into a single light source object in at least one image of continuous sequence of high dynamic range images. Therefore, claim 68 meets the requirements of PCT Article 33(2) and (3) with respect to novelty and inventive step.

5) An automatic vehicle equipment control system of claim 69 differs from those of D1 to D4 in that it comprises at least one imager configured to acquire a continuous sequence of high dynamic range

Continued on Supplemental Box

Box No. VIII Certain observations on the international application

The following observations on the clarity of the claims, description, and drawings or on the question whether the claims are fully supported by the description, are made:

1. The term 'approximately' used in claims 17, 39-40, 42-43, 46 is vague and unclear, and leaves the reader in doubt as to the meaning of the technical feature to which those refer, thereby rendering the definition of the subject matter of the said claims unclear (PCT Article 6).

2. The phrase "said highway markings" used in claim 1 is vague and unclear because the term "highway markings" is not disclosed ahead in the claim 1, and leaves the reader in doubt as to the meaning of the technical feature to which those refer, thereby rendering the definition of the subject matter of the said claims unclear. For the reason above, claim 1 and claims 2-66 dependent on claim 1 are vague and unclear (PCT Article 6).

3. Claim 2 is worded in reference to 'oncoming headlamp', 'diffuse lane marking' and 'distant tail lamp' of claims 1, 67, 68, or 69. However, said 'oncoming headlamp' and 'diffuse lane marking' and 'distant tail lamp' have not been worded in claims 67, 68, or 69 (PCT Article 6).

4. Claim 4 is worded in reference to 'light sources' of claims 1, 67, 68, or 69. However, said 'light sources' have not been worded in claims 67, 68, or 69 (PCT Article 6).

5. Claim 5 is worded in reference to 'color data' and 'color component' of claims 1, 67, 68, or 69. However, said 'color data' and 'color component' have not been worded in claims 1, 67, 68, or 69 (PCT Article 6).

6. Claim 7 is worded in reference to 'pixel location' and 'interpolation' of claims 1, 67, 68, or 69. However, said 'pixel location' and 'interpolation' have not been worded in claims 1, 67, 68, or 69 (PCT Article 6).

7. Claim 11 is worded in reference to 'statistically calculated values' and 'color components' of claims 1, 67, 68, or 69. However, said 'statistically calculated values' and 'color components' have not been worded in claims 1, 67, 68, or 69. For the reason above, claims 12-13 dependent on claim 11 are vague and unclear (PCT Article 6).

8. Claim 38 and 39 are worded in reference to 'frame rate' of claims 1, 67, 68, or 69. However, said 'frame rate' have not been worded in claims 1, 67, 68, or 69 (PCT Article 6).

9. Claims 2-8, 10-11, 14, 17-18, 20-22, 32, 34-35, 38-39, 41, 43-52, 55-56, 61, 63-66 do not refer to previous claims, so lack of clarity of the claims as a whole arises to determine the matter for which protection is sought, and places an undue burden on others seeking to establish the extent of protection. For the reason above, claims 9, 12-13, 15-16, 19, 23-31, 33, 36-37, 40, 42, 53-54, 57-60, 62 dependent on said claims also do not meet the requirement of PCT Article 6.

10. Claim 81 referred to itself so lack of clarity of the claims as a whole arises to determine the matter for which protection is sought, and places an undue burden on others seeking to establish the extent of protection. For the reason above, claims 82-86 dependent on claim 81 do not meet the requirement of PCT Article 6 also.

Supplemental Box

In case the space in any of the preceding boxes is not sufficient.
Continuation of:

Box V

single frame images, and at least one imager comprising a pixel array; a color spectral filter array; a lens; a processor in communication with at least one imager, said processor being configured to detect an alternating current(AC) light source in said continuous sequence of high dynamic range images, wherein at least one imager is configured to have a sampling image repetition period that is longer than that of a flicker cycle period of said AC light source. Therefore, claim 69 meets the requirements of PCT Article 33(2) and (3) with respect to novelty and inventive step.

1.2 Claims 70-79

A method of generating a lane departure warning of claim 70 differs from those of D1 to D4 in that it comprises the step of populating a world coordinate system grid for incoming pixel data; scoring marker points; processing said scored marker points; determining a type of lane lines based upon said processed and scored marker points; computing a vehicle departure from said lane lines; and determining if a warning should be emitted. And it is not obvious to a person skilled in the art by the documents, taken alone or in combination. Therefore, claim 1 meets the requirements of PCT Article 33(2) and (3) with respect to novelty and inventive step.

Claims 71-79 are dependent on claim 70 and therefore meet the requirements of PCT Article 33(2) and (3).

1.3 Claims 80-86

A method of generating a control signal for vehicle headlamp control of claim 80 differs from those of D1 to D4 in that it comprises the step of extracting a list of light objects; combining single-peak light sources into muti-peak light objects; connecting current light sources contained in previous images; calculating at least one light source attribute; and determining an appropriate state of a vehicle's headlamp. And it is not obvious to a person skilled in the art by the documents, taken alone or in combination. Therefore, claim 1 meets the requirements of PCT Article 33(2) and (3) with respect to novelty and inventive step.

Claims 81-86 are dependent on claim 80 and therefore meet the requirements of PCT Article 33(2) and (3).

2. Industrial Applicability

Claims 1-86 are industrially applicable under PCT Article 33(4).

EXHIBIT 2

IN THE UNITED STATES PATENT AND TRADEMARK OFFICE

Art Unit	:	2622
Applicants	:	Jon H. Bechtel et al.
Appln. No.	:	13/034,748
Filing Date	:	February 25, 2011
Confirmation No.	:	1419
For	:	AUTOMATIC VEHICLE EQUIPMENT MONITORING, WARNING, AND CONTROL SYSTEM

Commissioner for Patents
P.O. Box 1450
Alexandria, Virginia 22313-1450

Dear Sir:

PRELIMINARY AMENDMENT UNDER 37 C.F.R. § 1.115

Applicants have amended the claims, and respectfully request that the Examiner consider the following remarks in the above-identified application.

Amendments to the Claims are reflected in the listing of claims which begins on page 2 of this paper.

Remarks begin on page 18 of this paper.

IN THE CLAIMS:

This listing of claims will replace all prior versions and listings of claims in the application:

1. (Currently Amended) An automatic vehicle equipment control system comprising:

at least one imager configured to acquire a continuous sequence of high dynamic range single frame images, and said at least one imager comprising a pixel array;

a processor in communication with said at least one imager, and configured to process said continuous sequence of said high dynamic range images;

a color spectral filter array in optical communication with said at least one imager, said color spectral filter array comprising a plurality of color filters, at least a portion of which are different colors, and pixels of said pixel array being in optical communication with substantially one said spectral color filter; and

a lens in optical communication with said at least one imager and said color spectral filter array;

wherein said imager is configured to capture a non-saturated image of nearby oncoming headlamps and at least one of a diffuse lane marking and a distant tail lamp in one image frame of said continuous sequence of high dynamic range single frame images, and the automatic vehicle equipment control system configured to detect at least one of said ~~highway~~ lane markings and said tail lamps, and quantify light from said oncoming headlamp from data in said one image frame.

2. (Original) The automatic vehicle equipment control system of claim 1, wherein said oncoming headlamp and at least one said diffuse lane marking and said distant tail lamp are directly viewed by said imager.

3. (Original) The automatic vehicle equipment control system of claim 1, wherein said imager has an acquisition sequence for acquiring said continuous sequence of high dynamic

range single frame images, and said acquisition sequence remains unchanged for an extended period of time when multiple different types of light sources are detected.

4. (Original) The automatic vehicle equipment control system of claim 1, wherein said lens is configured so said at least one imager has a reduced sensitivity to said light sources having a large area and low luminance, and said lens is further configured such that a majority of a light from a small light area light source is substantially focused onto one pixel of said pixel array.

5. (Currently Amended) The automatic vehicle equipment control system of claim 1, wherein said processor is further configured to process a mosaiced color image by interpolating at least one color component for each pixel that is missing [[~~said~~]]color data, and generate a grayscale image as a weighted average of [[~~said~~]]color components at each pixel location.

6. (Original) The automatic vehicle equipment control system of claim 1, wherein said processor is further configured to enhance a detection of yellow in said image, such that yellow lane markers in said image are detected.

7. (Currently Amended) The automatic vehicle equipment control system of claim 1, wherein an interpolation equation is based upon at least one of a position of a pixel relative to a mosaiced color filter array pattern, a color of a missing component that is being calculated, and an edge pattern detected for [[~~said~~]]a pixel location where [[~~said~~]]an interpolation is being performed.

8. (Original) The automatic vehicle equipment control system of claim 1, wherein said processor is further configured to use an edge pattern detection with a larger pixel base to select an interpolation equation based upon pixel values from a smaller pixel base.

9. (Original) The automatic vehicle equipment control system of claim 8 further configured to select interpolation equations that calculate an interpolated value based primarily on values of pixels that are adjacent to the interpolation site.

10. (Original) The automatic vehicle equipment control system of claim 1, wherein said processor is further configured to modify grayscale values for at least one pixel associated with a selected said color spectral filter by increasing their values relative to a non-yellow pixel.

11. (Currently Amended) The automatic vehicle equipment control system of claim 1, wherein said processor is further configured to locate a position of imaged light sources in successive image, statistically calculate light levels for each said spectral filter array colors, and compare [[~~said~~]]statistically calculated values for each of [[~~said~~]]color ~~components~~ component to differentiate types of lamps.

12. (Original) The automatic vehicle equipment control system of claim 11, wherein said processor is further configured to take readings over time as the position of the projected image changes over time.

13. (Original) The automatic vehicle equipment control system of claim 11, wherein said processor is further configured, such that said image data from successive frames for a given light source is further utilized to provide classifications for position and trajectory of said light source.

14. (Original) The automatic vehicle equipment control system of claim 1 further comprising a memory device in communication with said processor, said memory device configured to store data obtained from captured said images, wherein said data comprises at least one of locations of bright pixels in said pixel array and of each said spectral color filter that covers each said pixel.

15. (Original) The automatic vehicle equipment control system of claim 14, wherein said processor is further configured to locate and track an imaged light source over a plurality of images, such that said data is analyzed to determine a plurality of properties of said light source.

16. (Original) The automatic vehicle equipment control system of claim 15, wherein said plurality of properties comprise at least one of color, intensity, a profile of intensity with respect to time, a position, a trajectory, and a velocity.

17. (Original) The automatic vehicle equipment control system of claim 1, wherein said color spectral filter array is arranged in a pattern, wherein a plurality of first colored filters are approximately twice the amount of a plurality of second colored filters and said plurality of first colored filters are approximately twice the amount of a plurality of third colored filters, and said processor is further configured to separately accumulate and compare a sum of first colored pixel values in a row with second colored pixel values and a sum of said first colored pixel values in a row with third colored pixel values to provide an estimate of a statistical quantity of measurements based on a time averaged response of said pixels with said spectral filters of a given color to a given light source adjusted for density of said pixels in said pixel array.

18. (Original) The automatic vehicle equipment control system of claim 1, wherein said processor is further configured to scan said image to locate local said pixels with a brightness peak reading value that exceeds a brightness peak threshold value set for a given spectral color filter.

19. (Original) The automatic vehicle equipment control system of claim 18, wherein said brightness peak threshold value is determined for each given said spectral color filter based upon a density of bright spots in an adjoining area of said image.

20. (Original) The automatic vehicle equipment control system of claim 1 wherein said processor is further configured to perform edge preserving color interpolation to provide pixel color and luminance information for objects that are large enough to span several contiguous said pixels in said image.

21. (Original) The automatic vehicle equipment control system of claim 1, wherein said processor is further configured to acquire pixel data for said pixels in a neighborhood of a targeted pixel location and to share such data to perform separate color interpolation and brightness peak detection functions.

22. (Original) The automatic vehicle equipment control system of claim 1, wherein said processor is further configured to detect at least one brightness peak in said image.

23. (Original) The automatic vehicle equipment control system of claim 22, wherein at least two different spectral filter colored pixels are in communication with at least a portion of the same compare circuits, said compare circuits configured for compare operations in two different pixel array configurations.

24. (Original) The automatic vehicle equipment control system of claim 22, wherein said processor is further configured to screen out at least a portion of said brightness peaks based upon said brightness peaks being an imaged reflection of a light source.

25. (Original) The automatic vehicle equipment control system of claim 22, wherein said processor is further configured to indicate at least a portion of said brightness peaks to be further processed based upon said bright spot being a local peak or plateau in intensity.

26. (Original) The automatic vehicle equipment control system of claim 22, wherein said brightness peak is where a pixel value of a given said colored pixel is greater than or equal to pixel values of proximate like colored pixels in assigned directions.

27. (Original) The automatic vehicle equipment control system of claim 26, wherein said proximate like colored pixels comprises approximately eight neighboring like colored pixels in at least one of vertical, horizontal, and diagonal directions.

28. (Original) The automatic vehicle equipment control system of claim 22, wherein a brightness peak threshold value used to screen brightness peaks is variable.

29. (Original) The automatic vehicle equipment control system of claim 28, wherein said variable brightness peak threshold value is increased based upon increased density of bright spots proximate a bright spot being screened.

30. (Original) The automatic vehicle equipment control system of claim 22, wherein said processor is further configured to group a plurality of brightness peaks.

31. (Original) The automatic vehicle equipment control system of claim 30, wherein said brightness peaks are grouped based upon a determination that said brightness peaks are members of a connected set of pixels in said pixel array that exceed said brightness peak threshold value.

32. (Original) The automatic vehicle equipment control system of claim 1, wherein said processor is further configured to map at least a portion of said pixels to reshape an image by spatial transformation.

33. (Original) The automatic vehicle equipment control system of claim 32, wherein said reshaping of said image is utilized to at least one of provide a top-down view, correcting lens distortion, and stitching multiple images obtained from a plurality of imagers.

34. (Original) The automatic vehicle equipment control system of claim 1, wherein said processor is further configured to detect and screen red brightness peaks according to a variable threshold value that is adjusted according to a position of said red brightness peak in said image and a frequency of occurrence of said red brightness peak in zones of said image.

35. (Original) The automatic vehicle equipment control system of claim 1, wherein said processor is further configured to detect and prioritize brightness peaks in said image, such that at least a portion of said brightness peaks having a higher prioritization are processed prior to at least a portion of said brightness peaks having a lower prioritization.

36. (Original) The automatic vehicle equipment control system of claim 35, wherein said processor is further configured, for each brightness peak that is detected, a direction of a brightest adjacent pixel of each of the other said colored pixels is determined.

37. (Original) The automatic vehicle equipment control system of claim 36, wherein said processor is further configured to generate an importance weighting of pixels having peak readings that are reported based upon a sum of individual weighting factors that include at least one of weightings factors for a row position of a peak in an image array, a column position of said peak in said image array, an approximate logarithm of a brightness of said peak, and a magnitude of said peak relative to that of adjacent red and blue pixels.

38. (Currently Amended) The automatic vehicle equipment control system of claim 1, wherein [[~~said~~]]a frame rate of said imager is selectable.

39. (Currently Amended) The automatic vehicle equipment control system of claim 1, wherein said imager is configured to have [[~~said~~]]a frame rate of approximately 20 to 25 frames per second.

40. (Original) The automatic vehicle equipment control system of claim 39, wherein said frame rate is such that an alternating current (AC) light source operating at both approximately 60 Hz and 50 Hz is detectable.

41. (Original) The automatic vehicle equipment control system of claim 1, wherein said imager is configured to have a non-harmonic frequency frame rate with respect to an alternating current (AC) light source.

42. (Original) The automatic vehicle equipment control system of claim 41, wherein said non-harmonic frequency frame rate is a beat pattern in which a signal for a sub-sampled flicker frequency oscillates at a rate approximately equal to one half of said frame rate and a phase of said signal is inverted during each beat frequency half cycle phase reversal period.

43. (Original) The automatic vehicle equipment control system of claim 1, wherein said imager is configured to have a beat frequency frame rate with respect to an alternating current (AC) light source, such that a repetition rate of image acquisition for said beat frequency is approximately half a cycle period that is approximately two image acquisition periods so that during said beat frequency half cycle period, a phase of an alternating acquisition pattern shifts by approximately 180 degrees relative to a flicker cycle.

44. (Original) The automatic vehicle equipment control system of claim 1, wherein said processor is further configured to locate brightness peaks in said image, grouping peaks to said light source, tracking a history of said light source over a plurality of frames, calculating an intensity based on a sum of intensities of brighter pixels related to said light source in each said

image, classifying said light source, and generating a control signal based upon said classified light source.

45. (Original) The automatic vehicle equipment control system of claim 1 further comprising at least one light sensor having a different field of view from said at least one imager, wherein said imager has an integration period that is at least partly a function of light detected by said light sensor.

46. (Original) The automatic vehicle equipment control system of claim 1, wherein said at least one imager comprises a first imager having a field of view approximately forward of a controlled vehicle and a second imager having a field of view approximately rearward of said controlled vehicle.

47. (Original) The automatic vehicle equipment control system of claim 1, wherein said at least one imager is configured for use in at least one system comprising lane departure warning, adaptive cruise control, collision avoidance, traffic sign recognition, automatic headlamp control, pedestrian detection, occupant identification, drowsiness detection, smart airbag deployment, vehicle theft identification, drive-by wire, and blind spot detection.

48. (Original) The automatic vehicle equipment control system of claim 1, wherein said processor is further configured to detect a plurality of lane markers in said image, and determine a change ratio of lane marker curvature to detect additional lane markers.

49. (Original) The automatic vehicle equipment control system of claim 1, wherein said processor is further configured to detect lane markers, such that said colored spectral filter array comprising at least one blue filter, at least one green filter, and at least one red filter, wherein a low blue pixel value relative to a green pixel value and a red pixel value indicates a detection of a yellow lane marker.

50. (Original) The automatic vehicle equipment control system of claim 1, wherein said processor is further configured to perform color interpolation that is based upon an analysis of said image data to detect edge patterns, wherein interpolated values are a function of said detected edge patterns.

51. (Original) The automatic vehicle equipment control system of claim 1, wherein said processor is further configured to perform an interpolation equation to calculate a missing color component based upon an edge pattern detection using pixel values from a neighborhood of an interpolation site that extends beyond a three by three neighborhood of said interpolation site, and said interpolation equation further based upon values of pixels with said three by three neighborhood of a pixel for which a missing color component is being calculated.

52. (Original) The automatic vehicle equipment control system of claim 1, wherein said processor is further configured to calculate color component values for at least a portion of said pixels in said pixel array.

53. (Original) The automatic vehicle equipment control system of claim 52, wherein said processor is further configured to calculate grayscale values related to a luminance for at least a portion of said pixels in said pixel array.

54. (Original) The automatic vehicle equipment control system of claim 53, wherein said processor is further configured to modify grayscale values for at least a portion of pixels of a selected color by increasing their values relative to non-yellow pixels in order to facilitate their detection as lane markings.

55. (Original) The automatic vehicle equipment control system of claim 1, wherein said processor is further configured to double a grayscale value of at least a portion of yellow pixels in said image that are analyzed to detect lane markers.

56. (Original) The automatic vehicle equipment control system of claim 1, wherein said processor is further configured to adjust a color detection criteria based upon light conditions.

57. (Original) The automatic vehicle equipment control system of claim 56, wherein said processor is further configured to determine that a selected pixel is yellow when color ratios of various color component values for said pixel with respect to other selected color component values for the same said pixel are within a predetermined range.

58. (Original) The automatic vehicle equipment control system of claim 56, wherein said light conditions comprises one of direct sunlight, shaded area, and a headlamp.

59. (Original) The automatic vehicle equipment control system of claim 56, wherein said processor is further configured to detect a cloud type based upon said image of the sky as a function of at least one of color, pixel intensity, and spatial variation in pixel intensity.

60. (Original) The automatic vehicle equipment control system of claim 56, wherein said processor is further configured to utilize color of pixels from images of lane markings to adjust color detection thresholds to increase inclusion of such colors.

61. (Original) The automatic vehicle equipment control system of claim 1, wherein said processor is further configured to replace a denominator term that requires a repetitious division by a calculated adjustment to an exponent that is part of a calculation to provide an approximation to an original equation in order to eliminate said repetitious division.

62. (Original) The automatic vehicle equipment control system of claim 59, wherein said processor is further configured to utilize a scaling factor that reduces the number of pixel values that are saturated after tone mapping.

63. (Original) The automatic vehicle equipment control system of claim 1, wherein said processor is further configured to format pixel data to provide a luminance component and two compact color components that are substantially independent of luminance.

64. (Original) The automatic vehicle equipment control system of claim 1, wherein said processor is further configured to automatically select a color conversion algorithm based upon an external bit of information that comprises an amount of detected ambient light.

65. (Original) The automatic vehicle equipment control system of claim 1, wherein said processor is further configured to automatically select a color conversion algorithm based upon at least one of whether image data is being displayed, automatic vehicle exterior light control, lane detection, lane tracking, lane keeping, and blind spot warning.

66. (Original) The automatic vehicle equipment control system of claim 1, wherein said processor is further configured to alter a level of image enhancement applied as a result of a detected color based upon at least one of an assessment of a quality of color detection and a benefit of applying a color enhancement.

67. (Original) An automatic vehicle equipment control system comprising:

at least one imager configured to acquire a continuous sequence of high dynamic range single frame images, and said at least one imager comprising a pixel array;

a color spectral filter array in optical communication with said at least one imager, said color spectral filter array comprising a plurality of color filters, at least a portion of which are

different colors, and pixels of said pixel array being in optical communication with substantially one said spectral color filter;

a lens in optical communication with said at least one imager and said color spectral filter array; and

a processor in communication with said at least one imager, and configured to process said continuous sequence of high dynamic range images, wherein said processor is further configured to use color information from pixels of said pixel array to enhance yellow colored features in said high dynamic range images to detect yellow lane markers.

68. (Original) An automatic vehicle equipment control system comprising:

at least one imager configured to acquire a continuous sequence of high dynamic range single frame images, and said at least one imager comprising a pixel array;

a color spectral filter array in optical communication with said at least one imager, said color spectral filter array comprising a plurality of color filters, at least a portion of which are different colors, and pixels of said pixel array being in optical communication with substantially one said spectral color filter;

a lens in optical communication with said at least one imager and said color spectral filter array; and

a processor in communication with said at least one imager, wherein said processor is further configured to aggregate a plurality of bright pixels into a single light source object in at least one image of said continuous sequence of high dynamic range images.

69. (Original) An automatic vehicle equipment control system comprising:

at least one imager configured to acquire a continuous sequence of high dynamic range single frame images, and said at least one imager comprising a pixel array;

a color spectral filter array in optical communication with said at least one imager, said color spectral filter array comprising a plurality of color filters, at least a portion of which are

different colors, and each said pixel being in optical communication with substantially one said spectral color filter;

a lens in optical communication with said at least one imager and said color spectral filter array; and

a processor in communication with said at least one imager, said processor being configured to detect an alternating current (AC) light source in said continuous sequence of high dynamic range images, wherein said at least one imager is configured to have a sampling image repetition period that is longer than that of a flicker cycle period of said AC light source.

70. (Original) A method of generating a lane departure warning, said method comprising the steps of :

populating a world coordinate system grid for incoming pixel data;

scoring marker points;

processing said scored marker points;

determining a type of lane lines based upon said processed and scored marker points;

computing a vehicle departure from said lane lines; and

determining if a warning should be emitted.

71. (Original) The method of claim 70, wherein said step of populating a world coordinate system for incoming pixel data further comprises utilizing luminance information.

72. (Original) The method of claim 70, wherein said step of populating a world coordinate system for incoming pixel data further comprises bilinear interpolating when sample grid points translate to fractional coordinates in an image plane.

73. (Original) The method of claim 70, wherein said step of scoring marker points comprises calculating a cross correlation error for a series of grid sample points.

74. (Original) The method of claim 70, wherein said step of processing said scored marker points comprises classifying each lane line as one of an unknown type, a single type, a single-dashed type, a single-unknown type, a double type, a double-dashed-left type, a double-dashed-right type, and a double-unknown type.

75. (Original) The method of claim 70, wherein said step of processing said scored marker points comprises classifying each line based upon a number of points found along an edge of a lane marking and a displacement of points along said edge of said lane markings.

76. (Original) The method of claim 70, wherein said step of determining a type of lane line further comprises determining if said lane line is one of a double line, a solid line, and a dashed line.

77. (Original) The method of claim 70 further comprising the step of coping a history of said line detection from a left side into a right side when a controlled vehicle approximately completely crosses said line from right to left, and coping a history of said line detection from said right side into said left side when said controlled vehicle approximately completely crosses said line from left to right.

78. (Original) The method of claim 70, wherein said step of determining if a warning should be emitted further comprises evaluating at least one of a controlled vehicle's speed, a turn signal switch position, a yaw rate of said controlled vehicle, and an output a lane departure warning application.

79. (Original) The method of claim 70 further comprising the step of creating a lookup table utilized to translate an image coordinate system to a world coordinate system;

80. (Original) A method for generating a control signal for vehicle headlamp control, said method comprising the steps of:
extracting a list of light objects;
combining single-peak light sources into multi-peak light objects;
connecting current light sources to light sources contained in previous images;
calculating at least one light source attribute; and
determining an appropriate state of a vehicle's headlamp.

81. (Original) The method of claim 80, wherein said step of extracting a list of light objects further comprises a possible points of interest (POPI) harvest and a POPI blossom refinement.

82. (Original) The method of claim 81, wherein said POPI harvest comprises parsing said pre-processed encoded output, and creating a list of POPI blossom objects.

83. (Original) The method of claim 82, wherein said POPI blossom refinement comprises passing said list of POPI blossom objects to at least one registered refining factory.

84. (Original) The method of claim 83, wherein said at least one refining factory allocates light source objects, and populates a single peak light list that contains only a single pre-processed image located peak.

85. (Original) The method of claim 84, wherein said at least one registered refining factory determines at least one property of said light source, said at least one property comprising at least one of a red/white ratio, a peak pixel within said light source, a slope within a 5 x 5 array of pixels surrounding and including said peak pixel with said light source, a total grey scale value, past frame light source position, present frame light source position, motion, width, height, area, age, and growth.

REMARKS

1. STATUS OF THE CLAIMS

Claims 1-85 are pending.

Claims 1, 5, 7, 11, 38, and 39 are currently amended. Support for these amendments can be found throughout the specification, claims, and drawings as originally filed.

2. CLAIMS 1, 5, 7, 11, 38, AND 39

Applicants have amended claims 1, 5, 8, 11, 38, and 39 to correct antecedent basis of elements identified in the respective claims.

CONCLUSION

For all of the foregoing reasons, Applicants respectfully submit that claims 1-85, as amended, are in condition for allowance, which action is hereby respectfully requested. If the Examiner has any questions or comments with respect to this Amendment and Reply, the Examiner is encouraged to contact the undersigned at 616.772.1800.

Please charge any additional fees and credit any overpayments associated with this Amendment and Reply to Deposit Account No. 07-1070.

Respectfully submitted,

December 22, 2011
Date

Scott P. Ryan, Registration No. 59 535
GENTEX CORPORATION
600 N. Centennial St.
Zeeland, MI 49464
Tel. (616) 772-1800

SPR

UNITED STATES PATENT AND TRADEMARK OFFICE

Commissioner for Patents
United States Patent and Trademark Office
P.O. Box 1450
Alexandria, VA 22313-1450
www.uspto.gov

BRIAN J. REES
GENTEX CORPORATION
600 NORTH CENTENNIAL STREET
ZEELAND MI 49464

MAILED
FEB 28 2012
OFFICE OF PETITIONS

In re Application of
BECHTEL et al.
Application No.: 13/034,748
Filed: February 25, 2011
Attorney Docket No.: AUTO 2010 1130
For: AUTOMATIC VEHICLE EQUIPMENT MONITORING, WARNING, AND CONTROL SYSTEM

: DECISION ON REQUEST TO
: PARTICIPATE IN THE PATENT
: PROSECUTION HIGHWAY
: PROGRAM AND PETITION
: TO MAKE SPECIAL UNDER
: 37 CFR 1.102(a)

This is a decision on the renewed request to participate in the PCT Patent Prosecution Highway (PCT-PPH) pilot program and the petition under 37 CFR 1.102(a), filed on December 22, 2011, to make the above-identified application special.

The request and petition are **GRANTED**.

Discussion

A grantable request to participate in the PCT-PPH pilot program and petition to make special require:

(1) The U.S. application must have an eligible relationship to one or more PCT applications where the ISA or IPEA are the JPO, EPO, KIPO, IPAU, Russia, Spain, Finland, Austria, or USPTO;

(2) At least one claim in the PCT application has novelty, inventive step, and industrial applicability and must be free of any observations in Box VIII in the latest work product in the international stage or applicant must identify and explain why the claim(s) is/are not subject to the observation in Box VIII;

(3) Applicant must submit a copy of the claim(s) from the PCT application(s) that have novelty, inventive step, and industrial applicability along with an English translation thereof and a statement that the English translation is accurate, if the claims are not in the English language;

(4) All the claims in the U.S. application must sufficiently correspond or be amended to sufficiently correspond to the claim(s) that have novelty, inventive step, and industrial applicability in the PCT application(s);

(5) Examination of the U.S. application has not begun;

(6) Applicant must submit a copy of the latest international work product from the PCT application indicating that the claim(s) have novelty, inventive step, and industrial applicability along with an English translation thereof and a statement that the English translation is accurate if the latest international work product is not in the English language;

(7) Applicant must submit an IDS listing the documents cited by the PCT examiner in the international work product along with copies of documents except U.S. patents or U.S. patent application publications.

The request to participate in the PCT-PPH pilot program and petition comply with the above requirements. Accordingly, the above-identified application has been accorded "special" status.

Telephone inquiries concerning this decision should be directed to JoAnne Burke at 571-272-4584.

All other inquiries concerning the examination or status of the application is accessible in the PAIR system at http://www.uspto.gov/ebc.index.html.

This application will be forwarded to the examiner for action on the merits commensurate with this decision once this application's formality reviews have been completed.

Ramesh Krishnamurthy
RAMESH KRISHNAMURTHY
for David Bucci
Petitions Examiner
Office of Petitions

IN THE UNITED STATES PATENT AND TRADEMARK OFFICE

In re Application of:	Kathie Merrill LEONARD et al.
Serial No.:	(not yet known)
Filed:	February 25, 2011
Title:	SEGMENTED INSULATIVE DEVICE AND RELATED KIT
Group Art Unit:	(not yet known)
Examiner:	(not yet known)
Docket Ref.:	50970.4.P01US03

February 25, 2011

U.S. Patent and Trademark Office
Customer Service Window
Randolph Building
401 Dulany Street
Alexandria, VA 22314

STATEMENTS OF SPECIAL STATUS FOR THE ELIGIBILITY REQUIREMENT TO ACCOMPANY PETITION TO MAKE SPECIAL UNDER THE GREEN TECHNOLOGY PILOT PROGRAM

Dear Sir:

In accordance with item number 3 on the accompanying PETITION TO MAKE SPECIAL UNDER THE GREEN TECHNOLOGY PILOT PROGRAM, Applicants respectfully submit the subject matter of this application contributes to the conservation of energy.

Special status is sought because the invention materially contributes to the more efficient utilization and conservation of energy resources relating to the reduction of energy consumption in industrial equipment. Applicants respectfully submit that the application disclosure is clear on its face in that the claimed invention materially contributes to such energy conservation by providing institutional, industrial, and commercial users of conduit-based heat distribution systems with a cost-effective mechanism for reducing heat-transfer losses that would otherwise require increased energy demands. As this application is a divisional of 12/508,562, applicants further submit that the prior petition dated 23 JUL 2009 already of record in parent application 12/508,562 also supports the instant petition.

No fee beyond those already paid at filing is believed to be required with this petition. However, the Commissioner is hereby authorized to charge any additional fees, and credit any over payments to Deposit Account No. 503807.

Respectfully submitted for Applicants,

By: /Dennis R. Haszko, Reg. No. 39,575/

Dennis R. Haszko, Reg. No. 39,575
Patent Law Office of D. R. Haszko
499 Mosher Hill Road
Farmington, ME 04938
Tel: (207) 778-4870; Fax: (888) 480-9618

Doc Code: PET.GREEN
Document Description: Petition for Green Tech Pilot

PTO/SB/420 (11-10)
Approved for use through 01/31/2011. OMB 0651-0062
U.S. Patent and Trademark Office; U. S. DEPARTMENT OF COMMERCE
Under the Paperwork Reduction Act of 1995, no persons are required to respond to a collection of information unless it displays a valid OMB control number.

PETITION TO MAKE SPECIAL UNDER THE GREEN TECHNOLOGY PILOT PROGRAM

Attorney Docket Number: 50970.4.P01US03	Application Number (if known):	Filing date:
First Named Inventor: Kathie Merrill LEONARD		
Title: SEGMENTED INSULATIVE DEVICE AND RELATED KIT		

APPLICANT HEREBY REQUESTS TO PARTICIPATE IN THE GREEN TECHNOLOGY PILOT PROGRAM FOR THE ABOVE-IDENTIFIED APPLICATION. See Instruction Sheet on page 2.

This petition must be timely filed electronically using the USPTO electronic filing system, EFS-Web.

1. By filing this petition:

   Applicant is requesting early publication: Applicant hereby requests early publication under 37 CFR 1.219 and the publication fee set forth in 37 CFR 1.18(d) accompanies this request.

2. By filing this petition: applicant is agreeing to make an election without traverse in a telephonic interview and elect an invention that meets the eligibility requirements for the Green Technology Pilot Program, if the Office determines that the claims are not obviously directed to a single invention. See Instruction Sheet.

3. This request is accompanied by statements of special status for the eligibility requirement.

4. The application contains no more than three (3) independent claims and twenty (20) total claims.

5. The application does not contain any multiple dependent claims.

6. Other attachments: _____

Signature /Dennis R. Haszko, Reg. No. 39,575/	Date 24 FEB 2011
Name (Print/Typed) Dennis R. Haszko	Registration Number 39,575

Note: *Signatures of all the inventors or assignees of record of the entire interest or their representative(s) are required in accordance with 37 CFR 1.33 and 11.18. Please see 37 CFR 1.4(d) for the form of the signature. If necessary, submit multiple forms for more than one signature see below*.*

☒ *Total of 1 forms are submitted.

The information is required to obtain or retain a benefit by the public which is to file (and by the USPTO to process) an application. Confidentiality is governed by 35 U.S.C. 122 and 37 CFR 1.11 and 1.14. This collection is estimated to take 12 hours to complete, including gathering, preparing, and submitting the completed application form to the USPTO. Time will vary depending upon the individual case. Any comments on the amount of time you require to complete this form and/or suggestions for reducing this burden, should be sent to the Chief Information Officer, U.S. Patent and Trademark Office, U.S. Department of Commerce, P.O. Box 1450, Alexandria, VA 22313-1450. DO NOT SEND FEES OR COMPLETED FORMS TO THIS ADDRESS. **SEND TO: Commissioner for Patents, P.O. Box 1450, Alexandria, VA 22313-1450.**

If you need assistance in completing the form, call 1-800-PTO-9199 and select option 2.

UNITED STATES PATENT AND TRADEMARK OFFICE

UNITED STATES DEPARTMENT OF COMMERCE
United States Patent and Trademark Office
Address: COMMISSIONER FOR PATENTS
P.O. Box 1450
Alexandria, Virginia 22313-1450
www.uspto.gov

APPLICATION NO.	FILING DATE	FIRST NAMED INVENTOR	ATTORNEY DOCKET NO.	CONFIRMATION NO.
13/034,790	02/25/2011	Kathie LEONARD	50970.4.P01US03	1504

59893 7590 04/29/2011
PATENT LAW OFFICE OF D.R. HASZKO
c/o Dennis R. Haszko
499 MOSHER HILL ROAD
FARMINGTON, ME 04938

EXAMINER
THOMAS, ALEXANDER S

ART UNIT	PAPER NUMBER
1783	

NOTIFICATION DATE	DELIVERY MODE
04/29/2011	ELECTRONIC

Please find below and/or attached an Office communication concerning this application or proceeding.

The time period for reply, if any, is set in the attached communication.

Notice of the Office communication was sent electronically on above-indicated "Notification Date" to the following e-mail address(es):

DRH@LETTERSPATENT.COM
haszko@gmail.com

UNITED STATES PATENT AND TRADEMARK OFFICE

Commissioner for Patents
United States Patent and Trademark Office
P.O. Box 1450
Alexandria, VA 22313-1450
www.uspto.gov

PATENT LAW OFFICE OF D.R. HASZKO
c/o Dennis R. Haszko
499 MOSHER HILL ROAD
FARMINGTON ME 04938

4/29/2011

In re Application of	:	
Leonard et al.	:	DECISION ON PETITION
Application No. 13/034,790	:	TO MAKE SPECIAL UNDER
Filed: 2/25/2011	:	THE GREEN TECHNOLOGY
Attorney Docket No. **50970.4.P01US03**	:	PILOT PROGRAM

This is a decision on the petition under 37 CFR 1.102, filed 2/25/2011, to make the above-identified application special under the pilot program for applications pertaining to Green Technologies as set forth in 74 Federal Register Notice 64666 (December 8, 2009) and amended by 75 Federal Register Notice 28554 (May 21, 2010) and 75 Federal Register Notice 69049 (November 10, 2010).

The petition is **GRANTED**.

A grantable petition to make an application special under 37 CFR 1.102 and the pilot program as set forth in 74 FR 64666 must be directed to a nonprovisional application filed under 35 USC 111(a) or be a national stage entry under 35 USC 371, exclusive of any reissue applications.

In order to qualify for special status, the following requirements must be met. 1) The application must have no more than 3 independent claims and no more than 20 total claims. 2) The application must not contain any multiple dependent claims. 3) The petition must state the basis for seeking special status, i.e., the claimed invention either: A) materially enhances the quality of the environment or B) materially contributes to: i) the discovery or development of renewable energy resources, ii) the more efficient utilization and conservation of energy resources, or iii) greenhouse gas emission reduction. 4) If the disclosure is not clear on its face that the claimed invention materially contributes under category (A) or (B), the petition must be accompanied by a statement by the applicant, assignee, or an attorney/agent registered to practice before the Office explaining how the materiality standard is met. 5) A statement that applicant will agree to make an election without traverse in a telephonic interview if a restriction requirement is made by the examiner. 6) The petition to make special must be filed electronically. 7) The petition must be filed at least one day prior to the date that a first Office Action appears in the Patent Application Information Retrieval (PAIR) system. 8) The petition must be accompanied by a

request for early publication in compliance with 37 CFR 1.219 and include the publication fee as set forth in 37 CFR 1.18(d).

The requirement for a fee for consideration of the petition to make special for applications pertaining to Green Technologies has been waived.

The instant petition complies with items 1 – 8 above. Accordingly, the above-identified application has been accorded "special" status.

Telephone inquires concerning this decision should be directed to Tom Dunn at 571-272-1171.

The application is being forwarded to the Technology Center Art Unit 1783 for action on the merits commensurate with this decision.

/Tom Dunn/

Tom Dunn
Quality Assurance Specialist
Technology Center 1700

UNITED STATES PATENT AND TRADEMARK OFFICE

UNITED STATES DEPARTMENT OF COMMERCE
United States Patent and Trademark Office
Address: COMMISSIONER FOR PATENTS
P.O. Box 1450
Alexandria, Virginia 22313-1450
www.uspto.gov

APPLICATION NO.	FILING DATE	FIRST NAMED INVENTOR	ATTORNEY DOCKET NO.	CONFIRMATION NO.
13/034,795	02/25/2011	Donald Carroll Roe	11624	1509

27752 7590 06/22/2011
THE PROCTER & GAMBLE COMPANY
Global Legal Department - IP
Sycamore Building - 4th Floor
299 East Sixth Street
CINCINNATI, OH 45202

EXAMINER

ART UNIT	PAPER NUMBER
3761	

MAIL DATE	DELIVERY MODE
06/22/2011	PAPER

Please find below and/or attached an Office communication concerning this application or proceeding.

The time period for reply, if any, is set in the attached communication.

UNITED STATES PATENT AND TRADEMARK OFFICE

Commissioner for Patents
United States Patent and Trademark Office
P.O. Box 1450
Alexandria, VA 22313-1450
www.uspto.gov

THE PROCTER & GAMBLE COMPANY
Global Legal Department - IP
Sycamore Building - 4th Floor
299 East Sixth Street
CINCINNATI OH 45202

In re Application of:
ROE, DONALD CARROLL
Serial No.: 13/034795
Filed: February 25, 2011
Attorney Docket No. : 11624
Title: ABSORBENT ARTICLE WITH IMPROVED GARMENT-LIKE CHARACTER

DECISION ON A REQUEST TO PARTICIPATE IN PATENT PROSECUTION HIGHWAY PROGRAM AND PETITION TO MAKE SPECIAL UNDER CFR 1.102(a)

This is a decision on the request to participate in the Patent Prosecution Highway (PPH) program and the petition under 37 CFR 1.102(a), filed June 2, 2011 to make the above-identified application special.

The request and petition are **granted**.

A grantable request to participate in the PPH pilot program and petition to make special require:

(1) The U.S. application must validly claim priority under 35 U.S.C. 119(a) to one or more applications filed in the CIPO;
(2) Applicant must submit a copy of the allowable/patentable claim(s) from the CIPO application(s) along with an English translation thereof and a statement that the English translation is accurate;
(3) All the claims in the U.S. application must sufficiently correspond or be amended to sufficiently correspond to the allowable/patentable claim(s) in the CIPO application(s);
(4) Examination of the U.S. application has not begun;
(5) Applicant must submit a copy of all the office actions from each of the CIPO application(s) containing the allowable/patentable claim(s) along with an English translation thereof and a statement that the English translation is accurate; and
(6) Applicant must submit an IDS listing the documents cited by the CIPO examiner in the CIPO office action along with copies of documents except U.S. patents or U.S. patent application publications.

In light of the petition being properly submitted, the request to participate in the PPH program and the petition comply with the above requirements. Accordingly, the above-identified application has been accorded "special" status.

Applicant is encouraged to cite and submit all relevant prior art references, if any, to facilitate examination in this application.

Response must be filed via EFS-Web. Telephone inquiries concerning this decision should be directed to Henry C. Yuen, at 571-272-4856.

Petition is **granted**.

/Henry C. Yuen/

Henry C. Yuen
Special Programs Examiner
Technology Center 3700
Tel: 571-272-4856

UNITED STATES PATENT AND TRADEMARK OFFICE

UNITED STATES DEPARTMENT OF COMMERCE
United States Patent and Trademark Office
Address: COMMISSIONER FOR PATENTS
P.O. Box 1450
Alexandria, Virginia 22313-1450
www.uspto.gov

APPLICATION NO.	FILING DATE	FIRST NAMED INVENTOR	ATTORNEY DOCKET NO.	CONFIRMATION NO.
13/034,800	02/25/2011	Donald Carroll Roe	11625	1519

27752 7590 06/22/2011
THE PROCTER & GAMBLE COMPANY
Global Legal Department - IP
Sycamore Building - 4th Floor
299 East Sixth Street
CINCINNATI, OH 45202

EXAMINER

ART UNIT	PAPER NUMBER
3761	

MAIL DATE	DELIVERY MODE
06/22/2011	PAPER

Please find below and/or attached an Office communication concerning this application or proceeding.

The time period for reply, if any, is set in the attached communication.

UNITED STATES PATENT AND TRADEMARK OFFICE

Commissioner for Patents
United States Patent and Trademark Office
P.O. Box 1450
Alexandria, VA 22313-1450
www.uspto.gov

THE PROCTER & GAMBLE COMPANY
Global Legal Department - IP
Sycamore Building - 4th Floor
299 East Sixth Street
CINCINNATI OH 45202

In re Application of:
ROE, DONALD CARROLL
Serial No.: 13/034800
Filed: February 25, 2011
Attorney Docket No. : 11625
Title: ABSORBENT ARTICLE WITH IMPROVED GARMENT-LIKE CHARACTER

DECISION ON A REQUEST TO PARTICIPATE IN PATENT PROSECUTION HIGHWAY PROGRAM AND PETITION TO MAKE SPECIAL UNDER CFR 1.102(a)

This is a decision on the request to participate in the Patent Prosecution Highway (PPH) program and the petition under 37 CFR 1.102(a), filed June 2, 2011 to make the above-identified application special.

The request and petition are **granted**.

A grantable request to participate in the PPH pilot program and petition to make special require:

(1) The U.S. application must validly claim priority under 35 U.S.C. 119(a) to one or more applications filed in the CIPO;
(2) Applicant must submit a copy of the allowable/patentable claim(s) from the CIPO application(s) along with an English translation thereof and a statement that the English translation is accurate;
(3) All the claims in the U.S. application must sufficiently correspond or be amended to sufficiently correspond to the allowable/patentable claim(s) in the CIPO application(s);
(4) Examination of the U.S. application has not begun;
(5) Applicant must submit a copy of all the office actions from each of the CIPO application(s) containing the allowable/patentable claim(s) along with an English translation thereof and a statement that the English translation is accurate; and
(6) Applicant must submit an IDS listing the documents cited by the CIPO examiner in the CIPO office action along with copies of documents except U.S. patents or U.S. patent application publications.

In light of the petition being properly submitted, the request to participate in the PPH program and the petition comply with the above requirements. Accordingly, the above-identified application has been accorded "special" status.

Applicant is encouraged to cite and submit all relevant prior art references, if any, to facilitate examination in this application.

Response must be filed via EFS-Web. Telephone inquiries concerning this decision should be directed to Henry C. Yuen, at 571-272-4856.

Petition is **granted**.

/Henry C. Yuen/

Henry C. Yuen
Special Programs Examiner
Technology Center 3700
Tel: 571-272-4856

UNITED STATES PATENT AND TRADEMARK OFFICE

Commissioner for Patents
United States Patent and Trademark Office
P.O. Box 1450
Alexandria, VA 22313-1450
www.uspto.gov

Decision Date : April 4, 2012

In re Application of :

Hisashi Ohtani

DECISION ON PETITION

UNDER CFR 1.313(c)(2)

Application No : 13034805

Filed : 25-Feb-2011

Attorney Docket No : 07977-0220004

This is an electronic decision on the petition under 37 CFR 1.313(c)(2), filed April 4, 2012 , to withdraw the above-identified application from issue after payment of the issue fee.

The petition is **GRANTED.**

The above-identified application is withdrawn from issue for consideration of a submission under 37 CFR 1.114 (request for continued examination). See 37 CFR 1.313(c)(2).

Petitioner is advised that the issue fee paid in this application cannot be refunded. If, however, this application is again allowed, petitioner may request that it be applied towards the issue fee required by the new Notice of Allowance.

Telephone inquiries concerning this decision should be directed to the Patent Electronic Business Center (EBC) at 866-217-9197.

This application file is being referred to Technology Center AU 2871 for processing of the request for continuing examination under 37 CFR 1.114 .

Office of Petitions

Doc Code: PET.AUTO Document Description: Petition automatically granted by EFS-Web	PTO/SB/140 U.S. Patent and Trademark Office Department of Commerce

Electronic Petition Request	**PETITION TO WITHDRAW AN APPLICATION FROM ISSUE AFTER PAYMENT OF THE ISSUE FEE UNDER 37 CFR 1.313(c)**
Application Number	13034805
Filing Date	25-Feb-2011
First Named Inventor	Hisashi Ohtani
Art Unit	2871
Examiner Name	DAVID CHUNG
Attorney Docket Number	07977-0220004
Title	ACTIVE MATRIX LIQUID CRYSTAL DISPLAY DEVICE

An application may be withdrawn from issue for further action upon petition by the applicant. To request that the Office withdraw an application from issue, applicant must file a petition under this section including the fee set forth in § 1.17(h) and a showing of good and sufficient reasons why withdrawal of the application from issue is necessary.

APPLICANT HEREBY PETITIONS TO WITHDRAW THIS APPLICATION FROM ISSUE UNDER 37 CFR 1.313(c).

A grantable petition requires the following items:
(1) Petition fee; and
(2) One of the following reasons:
(a) Unpatentability of one or more claims, which must be accompanied by an unequivocal statement that one or more claims are unpatentable, an amendment to such claim or claims, and an explanation as to how the amendment causes such claim or claims to be patentable;
(b) Consideration of a request for continued examination in compliance with § 1.114 (for a utility or plant application only); or
(c) Express abandonment of the application. Such express abandonment may be in favor of a continuing application, but not a CPA under 37 CFR 1.53(d).

Petition Fee

- ☐ Applicant claims SMALL ENTITY status. See 37 CFR 1.27.
- ☐ Applicant is no longer claiming SMALL ENTITY status. See 37 CFR 1.27(g)(2).
- ☐ Applicant(s) status remains as SMALL ENTITY.
- ☒ Applicant(s) status remains as other than SMALL ENTITY

Reason for withdrawal from issue

○ One or more claims are unpatentable

◉ Consideration of a request for continued examination (RCE) (List of Required Documents and Fees)

○ Applicant hereby expressly abandons the instant application (any attorney/agent signing for this reason must have power of attorney pursuant to 37 CFR 1.32(b)).

RCE request,submission, and fee.

☐ I certify, in accordance with 37 CFR 1.4(d)(4) that : The RCE request ,submission, and fee have already been filed in the above-identified application on

☒ Are attached.

THIS PORTION MUST BE COMPLETED BY THE SIGNATORY OR SIGNATORIES

I certify, in accordance with 37 CFR 1.4(d)(4) that I am:

○ An attorney or agent registered to practice before the Patent and Trademark Office who has been given power of attorney in this application.

◉ An attorney or agent registered to practice before the Patent and Trademark Office, acting in a representative capacity.

○ A sole inventor

○ A joint inventor; I certify that I am authorized to sign this submission on behalf of all of the inventors

○ A joint inventor; all of whom are signing this e-petition

○ The assignee of record of the entire interest that has properly made itself of record pursuant to 37 CFR 3.71

Signature	/John F. Hayden/
Name	John F. Hayden
Registration Number	37640

UNITED STATES PATENT AND TRADEMARK OFFICE

Commissioner for Patents
United States Patent and Trademark Office
P.O. Box 1450
Alexandria, VA 22313-1450
www.uspto.gov

MAILED
MAY 06 2011
OFFICE OF PETITIONS

YOUNG & THOMPSON
209 MADISON STREET
SUITE 500
ALEXANDRIA, VA 22314

In re Application of
Marie-Josephe Amiot-Carlin et al
Application No. 13/034,847
Filed: February 25, 2011
Attorney Docket No. 0510-1172-1

NOTICE

This is a notice regarding your request for acceptance of a fee deficiency submission under 37 CFR 1.28. On September 1, 1998, the Court of Appeals for the Federal Circuit held that 37 CFR 1.28(c) is the sole provision governing the time for correction of the erroneous payment of the issue fee as a small entity. **See DH Technology v. Synergystex International, Inc. 154 F.3d 1333, 47 USPQ2d 1865 (Fed. Cir. Sept. 1, 1998).**

The Office no longer investigates or rejects original or reissue applications under 37 CFR 1.56. **1098 Off. Gaz. Pat. Office 502 (January 3, 1989).** Therefore, nothing in this Notice is intended to imply that an investigation was done.

Your fee deficiency submission under 37 CFR 1.28 is hereby **ACCEPTED**.

Inquiries related to this communication should be directed to Irvin Dingle at (571) 272-3210.

Irvin Dingle
Petitions Examiner
Office of Petitions

Doc Code: PET.GREEN
Document Description: Petition for Green Tech Pilot

PTO/SB/420 (11-10)
Approved for use through 01/31/2011. OMB 0651-0062
U.S. Patent and Trademark Office; U. S. DEPARTMENT OF COMMERCE
Under the Paperwork Reduction Act of 1995, no persons are required to respond to a collection of information unless it displays a valid OMB control number.

PETITION TO MAKE SPECIAL UNDER THE GREEN TECHNOLOGY PILOT PROGRAM

Attorney Docket Number: 83163083	Application Number (if known): 13034984	Filing date: February 25, 2011
First Named Inventor: Russell William Ferguson		
Title: SILENT KEY START CLIMATE CONTROL DEMAND		

APPLICANT HEREBY REQUESTS TO PARTICIPATE IN THE GREEN TECHNOLOGY PILOT PROGRAM FOR THE ABOVE-IDENTIFIED APPLICATION. See Instruction Sheet on page 2.

This petition must be timely filed electronically using the USPTO electronic filing system, EFS-Web.

1. By filing this petition:

   Applicant is requesting early publication: Applicant hereby requests early publication under 37 CFR 1.219 and the publication fee set forth in 37 CFR 1.18(d) accompanies this request.

2. By filing this petition: applicant is agreeing to make an election without traverse in a telephonic interview and elect an invention that meets the eligibility requirements for the Green Technology Pilot Program, if the Office determines that the claims are not obviously directed to a single invention. See Instruction Sheet.

3. This request is accompanied by statements of special status for the eligibility requirement.

4. The application contains no more than three (3) independent claims and twenty (20) total claims.

5. The application does not contain any multiple dependent claims.

6. Other attachments: _____

Signature /Jeremy J. Curcuri/	Date March 15, 2011
Name (Print/Typed) Jeremy J. Curcuri	Registration Number 42454

Note: *Signatures of all the inventors or assignees of record of the entire interest or their representative(s) are required in accordance with 37 CFR 1.33 and 11.18. Please see 37 CFR 1.4(d) for the form of the signature. If necessary, submit multiple forms for more than one signature see below*.*

☐ *Total of ..... forms are submitted.

The information is required to obtain or retain a benefit by the public which is to file (and by the USPTO to process) an application. Confidentiality is governed by 35 U.S.C. 122 and 37 CFR 1.11 and 1.14. This collection is estimated to take 12 hours to complete, including gathering, preparing, and submitting the completed application form to the USPTO. Time will vary depending upon the individual case. Any comments on the amount of time you require to complete this form and/or suggestions for reducing this burden, should be sent to the Chief Information Officer, U.S. Patent and Trademark Office, U.S. Department of Commerce, P.O. Box 1450, Alexandria, VA 22313-1450. DO NOT SEND FEES OR COMPLETED FORMS TO THIS ADDRESS. **SEND TO: Commissioner for Patents, P.O. Box 1450, Alexandria, VA 22313-1450.**

If you need assistance in completing the form, call 1-800-PTO-9199 and select option 2.

Under the Paperwork Reduction Act of 1995, no persons are required to respond to a collection of information unless it displays a valid OMB control number.

Instruction Sheet for Petition to Make Special Under the Green Technology Pilot Program

(Not to be Submitted to the USPTO)

The following is a summary of the requirements (for more information see the notices (i) "Pilot Program for Green Technologies Including Greenhouse Gas Reduction," (ii) "Elimination of Classification Requirement in the Green Technology Pilot Program," and (iii) "Expansion and Extension of the Green Technology Pilot Program," available on the USPTO web site at http://www.uspto.gov/patents/init_events/green_tech.jsp):

1) The application must be a non-reissue, non-provisional utility application filed under 35 U.S.C. 111 (a), or an international application that has entered the national stage in compliance with 35 U.S.C. 371, irrespective of the filing date of the application. Reexamination proceedings are excluded from this pilot program.

2) The application must contain three or fewer independent claims and twenty or fewer total claims. The application must not contain any multiple dependent claims. For an application that contains more than three independent claims or twenty total claims, or multiple dependent claims, applicant must file a preliminary amendment in compliance with 37 CFR 1.121 to cancel the excess claims and/or the multiple dependent claims at the time the petition to make special is filed.

3) The claims must be directed to a single invention that materially enhances the quality of the environment, or that materially contributes to: (1) the discovery or development of renewable energy resources; (2) the more efficient utilization and conservation of energy resources; or (3) green house gas emission reduction (see the eligibility requirements of sections II and III of the notice (i) cited above). The petition must include a statement that, if the USPTO determines that the claims are directed to multiple inventions (e.g., in a restriction requirement), applicant will agree to make an election without traverse in a telephonic interview, and elect an invention that meets the eligibility requirements in section II or III of the notice (i) cited above.

4) The petition to make special must be timely filed electronically using the USPTO electronic filing system, EFS-Web, and selecting the document description of "Petition for Green Tech Pilot" on the EFS-Web screen. Applicant should use form PTO/SB/420, which is available as a Portable Document Format (PDF) fillable form in EFS-Web and on the USPTO Web site.

5) The petition to make special must be filed at least one day prior to the date that a first Office action (which may be an Office action containing only a restriction requirement) appears in the Patent Application Information Retrieval (PAIR) system. Applicant may check the status of the application using PAIR.

6) The petition to make special must be accompanied by a request for early publication in compliance with 37 CFR 1.219 and the publication fee set forth in 37 CFR 1.18(d).

Privacy Act Statement

The **Privacy Act of 1974 (P.L. 93-579)** requires that you be given certain information in connection with your submission of the attached form related to a patent application or patent. Accordingly, pursuant to the requirements of the Act, please be advised that: (1) the general authority for the collection of this information is 35 U.S.C. 2(b)(2); (2) furnishing of the information solicited is voluntary; and (3) the principal purpose for which the information is used by the U.S. Patent and Trademark Office is to process and/or examine your submission related to a patent application or patent. If you do not furnish the requested information, the U.S. Patent and Trademark Office may not be able to process and/or examine your submission, which may result in termination of proceedings or abandonment of the application or expiration of the patent.

The information provided by you in this form will be subject to the following routine uses:

1. The information on this form will be treated confidentially to the extent allowed under the Freedom of Information Act (5 U.S.C. 552) and the Privacy Act (5 U.S.C 552a). Records from this system of records may be disclosed to the Department of Justice to determine whether disclosure of these records is required by the Freedom of Information Act.
2. A record from this system of records may be disclosed, as a routine use, in the course of presenting evidence to a court, magistrate, or administrative tribunal, including disclosures to opposing counsel in the course of settlement negotiations.
3. A record in this system of records may be disclosed, as a routine use, to a Member of Congress submitting a request involving an individual, to whom the record pertains, when the individual has requested assistance from the Member with respect to the subject matter of the record.
4. A record in this system of records may be disclosed, as a routine use, to a contractor of the Agency having need for the information in order to perform a contract. Recipients of information shall be required to comply with the requirements of the Privacy Act of 1974, as amended, pursuant to 5 U.S.C. 552a(m).
5. A record related to an International Application filed under the Patent Cooperation Treaty in this system of records may be disclosed, as a routine use, to the International Bureau of the World Intellectual Property Organization, pursuant to the Patent Cooperation Treaty.
6. A record in this system of records may be disclosed, as a routine use, to another federal agency for purposes of National Security review (35 U.S.C. 181) and for review pursuant to the Atomic Energy Act (42 U.S.C. 218(c)).
7. A record from this system of records may be disclosed, as a routine use, to the Administrator, General Services, or his/her designee, during an inspection of records conducted by GSA as part of that agency's responsibility to recommend improvements in records management practices and programs, under authority of 44 U.S.C. 2904 and 2906. Such disclosure shall be made in accordance with the GSA regulations governing inspection of records for this purpose, and any other relevant (*i.e.*, GSA or Commerce) directive. Such disclosure shall not be used to make determinations about individuals.
8. A record from this system of records may be disclosed, as a routine use, to the public after either publication of the application pursuant to 35 U.S.C. 122(b) or issuance of a patent pursuant to 35 U.S.C. 151. Further, a record may be disclosed, subject to the limitations of 37 CFR 1.14, as a routine use, to the public if the record was filed in an application which became abandoned or in which the proceedings were terminated and which application is referenced by either a published application, an application open to public inspection or an issued patent.
9. A record from this system of records may be disclosed, as a routine use, to a Federal, State, or local law enforcement agency, if the USPTO becomes aware of a violation or potential violation of law or regulation.

IN THE UNITED STATES PATENT AND TRADEMARK OFFICE

In re application of:

RUSSELL WILLIAM FERGUSON et al.

Group Art Unit: Unknown

Examiner: Unknown

Serial No.: 13034984

Filed: February 25, 2011

For: SILENT KEY START CLIMATE CONTROL DEMAND

Attorney Docket No.: 83163083

STATEMENT SUPPORTING ELIGBILITY REQUIREMENT OF THE GREEN TECHNOLOGY PILOT PROGRAM

Commissioner for Patents
U.S. Patent and Trademark Office
P.O. Box 1450
Alexandria, VA 22313-1450

Dear Sir:

This Statement of Special Status for the Eligibility Requirement is being filed concurrently with a Petition To Make Special Under the Green Technology Pilot Program (PTO/SB/420), and pursuant to the requirements of 74 Fed. Reg. 64,666 (Dec. 8, 2009), as amended by 75 Fed. Reg. 28, 554 (May 21, 2010) and 75 Fed. Reg. 68049 (Nov. 10, 2010).

Applicant respectfully submits that the above-identified application is eligible for the "Green Technology Pilot Program" as materially contributing to the more efficient utilization and conservation of energy resources or the reduction of greenhouse gas emissions.

Applicant respectfully submits that it is clear on the above-identified application's face that the claimed invention materially contributes to the more efficient utilization and conservation of energy resources or the reduction of greenhouse gas emissions, hence no additional statement explaining how the materiality standard is met is being submitted at this time.

The Application is a non-reissue, non-provisional utility application filed under 35 U.S.C. §111(a). The Application contains no more than three (3) independent claims and twenty (20) total claims. The Application does not contain multiple dependent claims. A first Office action has not yet appeared in the Patent Application Information Retrieval System (PAIR).

The publication fee under 37 C.F.R. § 1.18(d) of $300 has been paid upon filing. Please charge any additional required fees to Deposit Account No. 06-1510 (Ford Global Technologies, LLC).

Respectfully submitted,

RUSSELL WILLIAM FERGUSON et al.

By: /Jeremy J. Curcuri/
Jeremy J. Curcuri
Reg. No. 42454
Attorney for Applicant

Date: March 15, 2011

BROOKS KUSHMAN P.C.
1000 Town Center, 22nd Floor
Southfield, MI 48075-1238
Phone: 248-358-4400
Fax: 248-358-3351

UNITED STATES PATENT AND TRADEMARK OFFICE

UNITED STATES DEPARTMENT OF COMMERCE
United States Patent and Trademark Office
Address: COMMISSIONER FOR PATENTS
P.O. Box 1450
Alexandria, Virginia 22313-1450
www.uspto.gov

APPLICATION NO.	FILING DATE	FIRST NAMED INVENTOR	ATTORNEY DOCKET NO.	CONFIRMATION NO.
13/034,984	02/25/2011	Russell William Ferguson	83163083	1906

28395 7590 03/30/2011
BROOKS KUSHMAN P.C./FGTL
1000 TOWN CENTER
22ND FLOOR
SOUTHFIELD, MI 48075-1238

EXAMINER

ART UNIT	PAPER NUMBER
3661	

MAIL DATE	DELIVERY MODE
03/30/2011	PAPER

Please find below and/or attached an Office communication concerning this application or proceeding.

The time period for reply, if any, is set in the attached communication.

UNITED STATES PATENT AND TRADEMARK OFFICE

Commissioner for Patents
United States Patent and Trademark Office
P.O. Box 1450
Alexandria, VA 22313-1450
www.uspto.gov

MAR 3 0 2011

BROOKS KUSHMAN P.C./FGTL
1000 TOWN CENTER
22ND FLOOR
SOUTHFIELD MI 48075-1238

In re Application of	:	
Russel FERGUSON et al.	:	DECISION ON PETITION
Application No. 13/034,984	:	TO MAKE SPECIAL UNDER
Filed: February 25, 2011	:	THE GREEN TECHNOLOGY
Attorney Docket No. 83163083	:	PILOT PROGRAM

This is a decision on the petitions under 37 CFR 1.102, filed March 16, 2011 to make the above-identified application special under the pilot program for applications pertaining to Green Technologies as set forth in 74 Federal Register Notice 64666 (December 8, 2009) and amended by 75 Federal Register Notice 28554 (May 21, 2010) and 75 Federal Register Notice 69049 (November 10, 2010).

The petition is **DISMISSED**.

If reconsideration of this decision is desired, a petition for reconsideration must be filed within ONE (1) MONTH OR THIRTY (30) DAYS from the mail date of this decision, whichever is longer. No extension of this time limit can be granted under 37 CFR 1.136(a) or (b). The petition for reconsideration should include an exhaustive attempt to provide the lacking item(s) noted below, since, after a decision on the petition for reconsideration, no further reconsideration or review of the matter will be undertaken by the Director.

A grantable petition to make an application special under 37 CFR 1.102 and the pilot program as set forth in 74 FR 64666 must be directed to a nonprovisional application filed under 35 USC 111(a) or be a national stage entry under 35 USC 371, exclusive of any reissue applications.

In order to qualify for special status, the following requirements must be met. 1) The application must have no more than 3 independent claims and no more than 20 total claims. 2) The application must not contain any multiple dependent claims. 3) The petition must state the basis for seeking special status, i.e., the claimed invention either: A) materially enhances the quality of the environment or B) materially contributes to: i) the discovery or development of renewable energy resources, ii) the more efficient utilization and conservation of energy resources, or iii) greenhouse gas emission reduction. 4) If the disclosure is not clear on its face that the claimed invention materially contributes under category (A) or (B), the petition must be accompanied by a statement by the applicant, assignee, or an attorney/agent registered to practice before the

Office explaining how the materiality standard is met. 5) A statement that applicant will agree to make an election without traverse in a telephonic interview if a restriction requirement is made by the examiner. 6) The petition to make special must be filed electronically. 7) The petition must be filed at least one day prior to the date that a first Office Action appears in the Patent Application Information Retrieval (PAIR) system. 8) The petition must be accompanied by a request for early publication in compliance with 37 CFR 1.219 and include the publication fee as set forth in 37 CFR 1.18(d).

The requirement for a fee for consideration of the petition to make special for applications pertaining to Green Technologies has been waived.

The petition lacks item 4.

In regard to item 4, the claimed method and system for silent key start to meet climate control demand utilizes the engine for the most part to heat/cool the vehicle cabin. In utilizing the engine, gasoline would be used, which in turn emits greenhouse gases. As such, petitioner's assertion of the claimed apparatus's efficient utilization and conservation of energy resources, or reduction of greenhouse gas emissions appears to be speculative. As stated in the notice, the materiality standard does not permit an applicant to speculate as to how a hypothetical end-user might specially apply the invention in a manner than could materially contribute to category (A) or (B). *Also see MPEP § 708.02 (VI).* Accordingly, it is unclear as to how the claimed invention would materially contribute to category (B), and it is not agreed that the application on its face meets that materiality standard.

Any reconsideration of this decision should be submitted through the USPTO electronic filing system, EFS-Web, and selecting the document description of "Petition for Green Tech Pilot" on the EFS-Web screen.

Telephone inquiries concerning this decision should be directed to Lanna Mai at 571-272-6867.

The application is being forwarded to the Technology Center Art Unit 3661 for action in its regular turn.

/Lanna Mai/

Lanna Mai
Quality Assurance Specialist
Technology Center 3600

UNITED STATES PATENT AND TRADEMARK OFFICE

UNITED STATES DEPARTMENT OF COMMERCE
United States Patent and Trademark Office
Address: COMMISSIONER FOR PATENTS
P.O. Box 1450
Alexandria, Virginia 22313-1450
www.uspto.gov

APPLICATION NO.	FILING DATE	FIRST NAMED INVENTOR	ATTORNEY DOCKET NO.	CONFIRMATION NO.
13/034,998	02/25/2011	Yoshihiro TAKIKAWA	Q122453	1930

7590 02/01/2012
SUGHRUE MION, PLLC
2100 PENNSYLVANIA AVENUE, N.W.
SUITE 800
WASHINGTON, DC 20037

EXAMINER
LORENCE, RICHARD M

ART UNIT	PAPER NUMBER
3655	

NOTIFICATION DATE	DELIVERY MODE
02/01/2012	ELECTRONIC

DECISION GRANTING PETITION UNDER 37 CFR 1.138(d)

The declaration of express abandonment is recognized

This is in response to the petition under 37 CFR 1.138(d), requesting for a refund of any previously paid search fee and excess claims fee in the above-identified application.

The petition is granted.

The express abandonment is recognized. Any previously paid search fee and excess claims fee are hereby refunded.

Telephone inquiries should be directed to the Office of Data Management at (571) 272-4200.

Nicole Farmer

Patent Publication Branch
Office of Data Management

FORM PET651G (Rev. 08/07)

UNITED STATES PATENT AND TRADEMARK OFFICE

UNITED STATES DEPARTMENT OF COMMERCE
United States Patent and Trademark Office
Address: COMMISSIONER FOR PATENTS
P.O. Box 1450
Alexandria, Virginia 22313-1450
www.uspto.gov

APPLICATION NO.	FILING DATE	FIRST NAMED INVENTOR	ATTORNEY DOCKET NO.	CONFIRMATION NO.
13/035,049	02/25/2011	HITOSHI KATO	09EL-008D1	2044

77464 7590 05/26/2011
IPUSA, P.L.L.C
1054 31ST STREET, N.W.
Suite 400
Washington, DC 20007

EXAMINER

ART UNIT	PAPER NUMBER
1715	

NOTIFICATION DATE	DELIVERY MODE
05/26/2011	ELECTRONIC

Please find below and/or attached an Office communication concerning this application or proceeding.

The time period for reply, if any, is set in the attached communication.

Notice of the Office communication was sent electronically on above-indicated "Notification Date" to the following e-mail address(es):

IPUSA@IPUSAPAT.COM
uspa-weeks@ipusapat.com
ips@itohpat.co.jp

UNITED STATES PATENT AND TRADEMARK OFFICE

Commissioner for Patents
United States Patent and Trademark Office
P.O. Box 1450
Alexandria, VA 22313-1450
www.uspto.gov

May 25, 2011 WG

In re application of Hitoshi Kato et al. Serial No. 13/035,049 Filed: February 25, 2011 For: FILM DEPOSITION APPARATUS, FILM DEPOSITION METHOD, AND COMPUTER READABLE STORAGE MEDIUM	: : : : : : : :	DECISION ON REQUEST TO PARTICIPATE IN PATENT PROSECUTION HIGHWAY PROGRAM AND PETITION TO MAKE UNDER 37 CFR 1.102(a)

This is a decision on the request to participate in the Patent Prosecution Highway (PPH) program and the petition under 37 CFR 1.102(a) to make the above-identified application special filed February 25, 2011.

The request and petition are **DISMISSED**.

A grantable request to participate in the PPH program and petition to make special require:

(1) The U.S. application must validly claim priority under 35 U.S.C. 119(a) to one or more applications filed in the JPO, note where the JPO application with similar claims is not the same application from which the U.S. application claims priority that the applicant must identify the relationship between the JPO application with similar claims and the JPO priority application;

(2) Applicant must submit a copy of:
   a. The allowable/patentable claim(s) from the JPO application(s) or if a copy of the allowable/patentable claims is available via the Dossier Access System (DAS) applicant may request the USPTO to obtain a copy from DAS; however, if the USPTO is unable to obtain a copy from the DAS, the applicant will be required to submit a copy;
   b. An English translation of the allowable/ patentable claim(s), if applicable; and
   c. A statement that the English translation is accurate, if applicable;

(3) Applicant must:
   a. Ensure all the independent claims in the U.S. application must sufficiently correspond or be amended to sufficiently correspond to the allowable/patentable claim(s) in the JPO application(s); and
   b. Submit a claims correspondence table in English;

(4) Examination of the U.S. application has not begun;

(5) Applicant must submit:

a. Documentation of prior office action:
   i. a copy of the office action(s) just prior to the "Decision to Grant a Patent" from each of the JPO application(s) containing the allowable/patentable claims(s) or
   ii. if the allowable/patentable claim(s) are from "Notification of Reasons for Refusal" then the Notification of Reasons for Refusal or
   iii. if the JPO application is a first action allowance then no office action from the JPO is necessary should be indicated on the request/petition form;
   Further, if a copy of the documents from (i) or (ii) is available via the Dossier Access System (DAS), applicant may request the USPO obtain a copy from the DAS; however, if the USPTO is unable to obtain a copy of the DAS, the applicant will be required to submit a copy; and
b. An English language translation of the JPO Office action from (5)(a)(i)-(ii) above if applicable; and

(6) Applicant must submit:

a. An IDS listing the documents cited by the JPO examiner in the JPO office action (unless already submitted in this application)
b. Copies of documents except U.S. patents or U.S. patent application publications (unless already submitted in this application).

The request to participate in the PPH program and petition fail because the JPO application with similar claims is not the same application from which the U.S. application claims priority and applicant has not identified the relationship between the JPO application with similar claims and the JPO priority application and because the IDS does not list all documents cited by the JPO examiner and copies of all documents except U.S. patents or U.S. patent application publications have not been submitted

Applicant is given a time period of **ONE MONTH OR THIRTY DAYS**, whichever is longer, from the mailing date of this decision to correct the deficiencies. **NO EXTENSION OF TIME UNDER 37 CFR 1.136 IS PERMITTED.** If the deficiencies are not corrected within the time period given, the application will await action in its regular turn.

Any inquiry regarding this decision should be directed to Walter D. Griffin, Supervisory Patent Examiner, at (571) 272-1447.

All other inquiries concerning the examination or status of the application is accessible in the PAIR system at http://www.uspto.gov/ebc/index.html.

/Walter D. Griffin/

Walter D. Griffin
Supervisory Patent Examiner
Technology Center 1700

UNITED STATES PATENT AND TRADEMARK OFFICE

UNITED STATES DEPARTMENT OF COMMERCE
United States Patent and Trademark Office
Address: COMMISSIONER FOR PATENTS
P.O. Box 1450
Alexandria, Virginia 22313-1450
www.uspto.gov

APPLICATION NO.	FILING DATE	FIRST NAMED INVENTOR	ATTORNEY DOCKET NO.	CONFIRMATION NO.
13/035,049	02/25/2011	HITOSHI KATO	09EL-008D1	2044

77464 7590 08/03/2011
IPUSA, P.L.L.C
1054 31ST STREET, N.W.
Suite 400
Washington, DC 20007

EXAMINER
SNELTING, ERIN LYNN

ART UNIT	PAPER NUMBER
1741	

NOTIFICATION DATE	DELIVERY MODE
08/03/2011	ELECTRONIC

Please find below and/or attached an Office communication concerning this application or proceeding.

The time period for reply, if any, is set in the attached communication.

Notice of the Office communication was sent electronically on above-indicated "Notification Date" to the following e-mail address(es):

IPUSA@IPUSAPAT.COM
uspa-weeks@ipusapat.com
ips@itohpat.co.jp

UNITED STATES PATENT AND TRADEMARK OFFICE

Commissioner for Patents
United States Patent and Trademark Office
P.O. Box 1450
Alexandria, VA 22313-1450
www.uspto.gov

August 2, 2011 WG

In re application of Hitoshi Kato et al. Serial No. 13/035,049 Filed: February 25, 2011 For: FILM DEPOSITION APPARATUS, FILM DEPOSITION METHOD, AND COMPUTER READABLE STORAGE MEDIUM	:	DECISION ON REQUEST TO PARTICIPATE IN PATENT PROSECUTION HIGHWAY PROGRAM AND PETITION TO MAKE SPECIAL UNDER 37 CFR 1.102(a)

This is a decision on the request to participate in the Patent Prosecution Highway (PPH) program and the petition under 37 CFR 1.102(a) to make the above-identified application special filed June 23, 2011.

The request and petition are **GRANTED**.

A grantable request to participate in the PPH program and petition to make special require:

(1) The U.S. application must validly claim priority under 35 U.S.C. 119(a) to one or more applications filed in the JPO, note where the JPO application with similar claims is not the same application from which the U.S. application claims priority that the applicant must identify the relationship between the JPO application with similar claims and the JPO priority application;

(2) Applicant must submit a copy of:
   a. The allowable/patentable claim(s) from the JPO application(s) or if a copy of the allowable/patentable claims is available via the Dossier Access System (DAS) applicant may request the USPTO to obtain a copy from DAS; however, if the USPTO is unable to obtain a copy from the DAS, the applicant will be required to submit a copy;
   b. An English translation of the allowable/ patentable claim(s), if applicable; and
   c. A statement that the English translation is accurate, if applicable;

(3) Applicant must:
   a. Ensure all the independent claims in the U.S. application must sufficiently correspond or be amended to sufficiently correspond to the allowable/patentable claim(s) in the JPO application(s); and
   b. Submit a claims correspondence table in English;

(4) Examination of the U.S. application has not begun;

(5) Applicant must submit:

a. Documentation of prior office action:
   i. a copy of the office action(s) just prior to the "Decision to Grant a Patent" from each of the JPO application(s) containing the allowable/patentable claims(s) or
   ii. if the allowable/patentable claim(s) are from "Notification of Reasons for Refusal" then the Notification of Reasons for Refusal or
   iii. if the JPO application is a first action allowance then no office action from the JPO is necessary should be indicated on the request/petition form;
   Further, if a copy of the documents from (i) or (ii) is available via the Dossier Access System (DAS), applicant may request the USPO obtain a copy from the DAS; however, if the USPTO is unable to obtain a copy of the DAS, the applicant will be required to submit a copy; and
b. An English language translation of the JPO Office action from (5)(a)(i)-(ii) above if applicable; and

(6) Applicant must submit:

a. An IDS listing the documents cited by the JPO examiner in the JPO office action (unless already submitted in this application)
b. Copies of documents except U.S. patents or U.S. patent application publications (unless already submitted in this application).

The request to participate in the PPH program and petition comply with the above requirements. Accordingly, the above-identified application has been accorded "special" status.

Any inquiry regarding this decision should be directed to Walter D. Griffin, Supervisory Patent Examiner, at (571) 272-1447.

All other inquiries concerning the examination or status of the application is accessible in the PAIR system at http://www.uspto.gov/ebc/index.html.

/Walter D. Griffin/

Walter D. Griffin
Supervisory Patent Examiner
Technology Center 1700

UNITED STATES PATENT AND TRADEMARK OFFICE

Commissioner for Patents
United States Patent and Trademark Office
P.O. Box 1450
Alexandria, VA 22313-1450
www.uspto.gov

WESTERMAN, HATTORI, DANIELS & ANDRIAN, LLP
1250 CONNECTICUT AVENUE, N.W.
SUITE 700
WASHINGTON DC 20036

MAILED
OCT 03 2011
OFFICE OF PETITIONS

In re Application of	:	
Masahiro Ueda et al	:	
Application No. 13/035,092	:	ON PETITION
Filed: February 25, 2011	:	
Attorney Docket No. 110195	:	

This is a decision in reference to the "PETITION UNDER 37 C.F.R. § 1.57(a) FOR INCORPORATION BY REFERENCE," filed on August 23, 2011, which is treated as a petition requesting that the above identified application as filed, include Formulas 1 through 5 from the original priority application.

The petition is **Dismissed**.

On February 25, 2011, the application was filed. A filing date of February 25, 2011, has been accorded the above-identified application.

On August 23, 2011, Petitioners files the above petition and concede that formulas 1 through 5 of were inadvertently omitted from the application papers present on filing. Petitioners assert that the application contained a claim under 37 CFR 1.55 for foreign priority, and that the omitted Formulas (1-5) were contained in the prior-filed foreign application. Petitioners have included a preliminary amendment and a copy of Formulas 1-5. Additionally, a copy of the prior-filed Japanese priority application (JP 2010-042796, containing the omitted formulas, has also been supplied with the subject petition.

37 CFR 1.57(a) states, in pertinent part:

> Subject to the conditions and requirements of this paragraph, if all or a portion of the specification or drawing(s) is inadvertently omitted from an application, but the application contains a claim under § 1.55 for priority of a prior-filed foreign application, or a claim under § 1.78 for the benefit of a prior-filed provisional, nonprovisional, or international application, that was present on the filing date of the application, and the inadvertently omitted portion of the specification or drawing(s) is completely contained in the prior-filed application, the claim under § 1.55 or § 1.78 shall also be considered an incorporation by reference of the

prior- filed application as to the inadvertently omitted portion of the specification or drawing(s).

(1) The application must be amended to include the inadvertently omitted portion of the specification or drawing(s) within any time period set by the Office, but in no case later than the close of prosecution as defined by § 1.114(b), or abandonment of the application, whichever occurs earlier. The applicant is also required to:

(i) Supply a copy of the prior-filed application, except where the prior-filed application is an application filed under 35 U.S.C. 111;

(ii) Supply an English language translation of any prior-filed application that is in a language other than English; and

(iii) Identify where the inadvertently omitted portion of the specification or drawings can be found in the prior-filed application.

(3) If an application is not otherwise entitled to a filing date under § 1.53(b), the amendment must be by way of a petition pursuant to this paragraph accompanied by the fee set forth in § 1.17(f).

MPEP 201.06(c)(IV) states that:

An applicant may incorporate by reference the prior application by including, in the continuation or divisional application-as-filed, an explicit statement that such specifically enumerated prior application or applications are "hereby incorporated by reference." The statement must appear in the specification. See 37 CFR 1.57(b) and MPEP § 608.01(p). The inclusion of this incorporation by reference statement will permit an applicant to amend the continuation or divisional application to include subject matter from the prior application(s), <u>without the need for a petition</u> provided the continuation or divisional application is entitled to a filing date notwithstanding the incorporation by reference.

(emphasis supplied)

For applications filed on or after September 21, 2004, a claim under 35 U.S.C. 120 and 37 CFR 1.78 for benefit of a prior-filed nonprovisional application or international application designating the U.S. that was present on the filing date of the continuation or divisional application is considered an incorporation by reference of the prior-filed application as to inadvertently omitted material, subject to the conditions and requirements of 37 CFR 1.57(a).

In this case, however, petitioners state that the missing formulas were incorporated by reference on filing pursuant to 37 CFR 1.57, and seek to amend the specification to include the missing Formulas 1-5.

As no petition is necessary to amend the specification, the petition is dismissed as moot.

Receipt of the preliminary amendment including Formulas 1-5, and copy of the foreign priority document filed on August 23, 2011 is acknowledged. The examiner will review the preliminary amendment for new matter in due course.

The petition fee has been received. Since this petition was not necessitated by an error on the part of the USPTO, the petition fee will not be refunded.

This application is being referred to Technology Center AU 2835 for appropriate action by the Examiner in due course.

Telephone inquiries concerning this matter may be directed to Karen Creasy at (571) 272-3208.

Anthony Knight
Director
Office of Petitions

PTO/SB/20PCT-JP (05-10)
Approved for use through 01/31/2012. OMB 0651-0058
U.S. Patent and Trademark Office; U. S. DEPARTMENT OF COMMERCE
Under the Paperwork Reduction Act of 1995, no persons are required to respond to a collection of information unless it displays a valid OMB control number.

REQUEST FOR PARTICIPATION IN THE PATENT COOPERATION TREATY - PATENT PROSECUTION HIGHWAY (PCT-PPH) PILOT PROGRAM BETWEEN THE JAPAN PATENT OFFICE (JPO) AND THE USPTO

Application No:	13/035,132	Filing date:	February 25, 2011
First Named Inventor:	Masafumi Matsui		
Title of the Invention:	Display Panel Device, Display Device, and Control Method Thereof		

THIS REQUEST FOR PARTICIPATION IN THE PCT-PPH PILOT PROGRAM ALONG WITH THE REQUIRED DOCUMENTS MUST BE SUBMITTED VIA EFS-WEB. INFORMATION REGARDING EFS-WEB IS AVAILABLE AT HTTP://WWW.USPTO.GOV/EBC/EFS_HELP.HTML

APPLICANT HEREBY REQUESTS PARTICIPATION IN THE PCT-PPH PROGRAM AND PETITIONS TO MAKE THE ABOVE-IDENTIFIED APPLICATION SPECIAL UNDER THE PCT-PPH PROGRAM.

The above-identified application is (1) a national stage entry of the corresponding PCT application, or (2) a national stage entry of another PCT application which claims priority to the corresponding PCT application, or (3) a national application that claims domestic/ foreign priority to the corresponding PCT application, or (4) a national application which forms the basis for the priority claim in the corresponding PCT application, or (5) a continuing application of a U.S. application that satisfies one of (1) to (4) above, or (6) a U.S. application that claims domestic benefit to a U.S. provisional application which forms the basis for the priority claim in the corresponding PCT application.

The corresponding PCT application number(s) is/are: PCT/JP2009/006213

The international date of the corresponding PCT application(s) is/are: November 19, 2009

I. List of Required Documents:

a. **A copy of the latest international work product (WO/ISA, WO/IPEA, or IPER) in the above–identified corresponding PCT application(s)**

☑ Is attached.

☐ Is not attached because the document is already in the U.S. application.

b. **A copy of all claims which were indicated as having novelty, inventive step and industrial applicability in the above-identified corresponding PCT application(s).**

☑ Is attached.

☐ Is not attached because the document is already in the U.S. application.

c. **English translations of the documents in a. and b. above are attached (if the documents are not in the English language). A statement that the English translation is accurate is attached for the document in b. above.**

This collection of information is required by 35 U.S.C. 119, 37 CFR 1.55, and 37 CFR 1.102(d). The information is required to obtain or retain a benefit by the public, which is to file (and by the USPTO to process) an application. Confidentiality is governed by 35 U.S.C. 122 and 37 CFR 1.11 and 1.14. This collection is estimated to take 2 hours to complete, including gathering, preparing, and submitting the completed application form to the USPTO. Time will vary depending upon the individual case. Any comments on the amount of time you require to complete this form and/or suggestions for reducing this burden should be sent to the Chief Information Officer, U.S. Patent and Trademark Office, U.S. Department of Commerce, P.O. Box 1450, Alexandria, VA 22313-1450. DO NOT SEND FEES OR COMPLETED FORMS TO THIS ADDRESS.

Approved for use through 01/31/2012. OMB 0651-0058
U.S.Patent and Trademark Office; U.S. DEPARTMENT OF COMMERCE

Under the Paperwork Reduction Act of 1995, no persons are required to respond to a collection of information unless it displays a valid OMB control number.

REQUEST FOR PARTICIPATION IN THE PCT-PPH PILOT PROGRAM BETWEEN THE JPO AND THE USPTO

(continued)

Application No.:	13/035,132
First Named Inventor:	Masafumi Matsui

d. **(1) An information disclosure statement listing the documents cited in the international work products (ISR, WO/ISA, WO/IPEA, IPER) of the corresponding PCT application.**

☐ Is attached

☑ Has already been filed in the above-identified U.S. application on May 11, 2011

(2) Copies of all documents (except) for U.S. patents or U.S. patent application publications)

☐ Are attached.

☑ Have already been filed in the above-identified U.S. application on May 11, 2011

II. Claims Correspondence Table:

Claims in US Application	Patentable Claims in the corresponding PCT Application	Explanation regarding the correspondence
1	1	Each claim has been amended to improve clarity, grammar, and syntax.
2	2	The claims have also been amended to utilize proper claim format and to
3	3	eliminate language informalities.
4	4	
5	5	Additionally, the claims have been amended to eliminate potential
6	6	means-plus-function claim language and to eliminate multiple
7	7	dependencies.
8	8	
9	10	
10	9	
11	11	

III. All the claims in the US application sufficiently correspond to the patentable claims in the corresponding PCT application.

Signature		William Pieprz Reg. No. 33,630	Date 12/13/2011
Name (Print/Typed)	Bruce H. Bernstein		Registration Number 29027

Privacy Act Statement

The **Privacy Act of 1974 (P.L. 93-579)** requires that you be given certain information in connection with your submission of the attached form related to a patent application or patent. Accordingly, pursuant to the requirements of the Act, please be advised that: (1) the general authority for the collection of this information is 35 U.S.C. 2(b)(2); (2) furnishing of the information solicited is voluntary; and (3) the principal purpose for which the information is used by the U.S. Patent and Trademark Office is to process and/or examine your submission related to a patent application or patent. If you do not furnish the requested information, the U.S. Patent and Trademark Office may not be able to process and/or examine your submission, which may result in termination of proceedings or abandonment of the application or expiration of the patent.

The information provided by you in this form will be subject to the following routine uses:

1. The information on this form will be treated confidentially to the extent allowed under the Freedom of Information Act (5 U.S.C. 552) and the Privacy Act (5 U.S.C 552a). Records from this system of records may be disclosed to the Department of Justice to determine whether disclosure of these records is required by the Freedom of Information Act.
2. A record from this system of records may be disclosed, as a routine use, in the course of presenting evidence to a court, magistrate, or administrative tribunal, including disclosures to opposing counsel in the course of settlement negotiations.
3. A record in this system of records may be disclosed, as a routine use, to a Member of Congress submitting a request involving an individual, to whom the record pertains, when the individual has requested assistance from the Member with respect to the subject matter of the record.
4. A record in this system of records may be disclosed, as a routine use, to a contractor of the Agency having need for the information in order to perform a contract. Recipients of information shall be required to comply with the requirements of the Privacy Act of 1974, as amended, pursuant to 5 U.S.C. 552a(m).
5. A record related to an International Application filed under the Patent Cooperation Treaty in this system of records may be disclosed, as a routine use, to the International Bureau of the World Intellectual Property Organization, pursuant to the Patent Cooperation Treaty.
6. A record in this system of records may be disclosed, as a routine use, to another federal agency for purposes of National Security review (35 U.S.C. 181) and for review pursuant to the Atomic Energy Act (42 U.S.C. 218(c)).
7. A record from this system of records may be disclosed, as a routine use, to the Administrator, General Services, or his/her designee, during an inspection of records conducted by GSA as part of that agency's responsibility to recommend improvements in records management practices and programs, under authority of 44 U.S.C. 2904 and 2906. Such disclosure shall be made in accordance with the GSA regulations governing inspection of records for this purpose, and any other relevant (*i.e.*, GSA or Commerce) directive. Such disclosure shall not be used to make determinations about individuals.
8. A record from this system of records may be disclosed, as a routine use, to the public after either publication of the application pursuant to 35 U.S.C. 122(b) or issuance of a patent pursuant to 35 U.S.C. 151. Further, a record may be disclosed, subject to the limitations of 37 CFR 1.14, as a routine use, to the public if the record was filed in an application which became abandoned or in which the proceedings were terminated and which application is referenced by either a published application, an application open to public inspection or an issued patent.
9. A record from this system of records may be disclosed, as a routine use, to a Federal, State, or local law enforcement agency, if the USPTO becomes aware of a violation or potential violation of law or regulation.

P38257.A02

IN THE UNITED STATES PATENT AND TRADEMARK OFFICE

Applicants	: Masafumi MATSUI et al.	Art Unit	: 2629
Appl. No.	: 13/035,132 (Continuation of PCT/JP2009/006213)	Examiner	: Richard A. Hjerpe
I.A. Filed	: November 19, 2009	Conf. No.	: 2198
For	: DISPLAY PANEL DEVICE, DISPLAY DEVICE, AND CONTROL METHOD THEREOF		

STATEMENT IN SUPPORT OF REQUEST FOR PARTICIPATION IN THE PATENT COOPERATION TREATY - PATENT PROSECUTION HIGHWAY (PCT-PPH) PROGRAM BETWEEN THE JAPAN PATENT OFFICE AND THE USPTO

Commissioner for Patents
U.S. Patent and Trademark Office
Customer Service Window, Mail Stop PPH
Randolph Building
401 Dulany Street
Alexandria VA 22314

Sir:

In support of the concurrently filed Request for Participation in the PCT-PPH Program between the JPO and the USPTO, Applicants bring the following information to the attention of the U.S. Patent and Trademark Office:

1. The present application is a national application claiming foreign/domestic priority to PCT/JP2009/006213. That is, the present application is a continuation of PCT/JP2009/006213.

2. A copy of the latest international work product in PCT/JP2009/006213, and a partial English language translation thereof, are submitted concurrently with this Request. Applicants note that no observation is described in Box VIII.

3. A copy of the claims in PCT/JP2009/006213 having novelty, an inventive step, and industrial applicability, and a verified English language translation thereof, are submitted concurrently with this Request.

4. Copies of the documents cited in the latest international work product were submitted in an Information Disclosure Statement filed on May 11, 2011. Nevertheless, an English language Abstract and machine translation of JP 2008-203655, which is cited in the latest international work product and which was submitted in the IDS, is submitted concurrently with this Request for the convenience of the Examiner. Applicants note that corresponding English language documents of JP 2008-203657 and JP 2009-204979, which are also cited in the latest international work product and which were also submitted in the IDS, are listed in the IDS.

If there should be any questions concerning this application, the Examiner is invited to contact the undersigned at the telephone number listed below.

Respectfully submitted,
Masafumi MATSUI et al.

Bruce H. Bernstein
Reg. No. 29027

William Pieprz
Reg. No. 33,630

December 13, 2011
GREENBLUM & BERNSTEIN, P.L.C.
1950 Roland Clarke Place
Reston, VA 20191
(703) 716-1191

IN THE UNITED STATES PATENT AND TRADEMARK OFFICE

In re Application of

Serial NO.: 13/035,132
Filing Date: February 25, 2011
For: DISPLAY PANEL DEVICE, DISPLAY DEVICE, AND CONTROL METHOD THEREOF

VERIFICATION OF TRANSLATION

Honorable Commissioner of Patents and Trademarks
Washington, D.C. 20231

Sir:

Kazumi KAWATA, c/o NII Patent Firm, 6F, Tanaka Ito Pia Shin-Osaka Bldg., 3-10, Nishi Nakajima 5-chome, Yodogawa-ku, Osaka-city, Osaka 532-0011, Japan declares:

(1) that he knows well both the Japanese and English languages;
(2) that he translated the claims from PCT/JP2009/006213 from Japanese to English;
(3) that the attached English translation is a true and correct translation of the claims from PCT/JP2009/006213 to the best of his knowledge and belief; and
(4) that all statements made of his own knowledge are true and that all statements made on information and belief are believed to be true, and further that these statements are made with the knowledge that willful false statements and the like are punishable by fine or imprisonment, or both, under 18 U.S.C. 1001, and that such false statements may jeopardize the validity of the application or any patent thereon.

This 6th day of December, 2011

Kazumi KAWATA

[CLAIMS]

[Claim 1]

A display panel device, comprising:

a luminescence element including a first luminescence electrode and a second luminescence electrode;

a first capacitor including a first capacitor electrode and a second capacitor electrode for holding a capacitor voltage;

a driver including a gate electrode, a drain electrode, and a source electrode for driving the luminescence element to produce a luminescence by allowing a drain current corresponding to the capacitor voltage to flow through the luminescence element, the gate electrode being connected to the first capacitor electrode, the source electrode being connected to the first luminescence electrode;

a first power line for determining a potential of the drain electrode of the driver;

a second power line electrically connected to the second luminescence electrode;

a data line for supplying a signal voltage to the first capacitor;

a first switch switchably interconnecting the data line and the first capacitor electrode;

a second switch switchably interconnecting the source electrode of the driver and the second capacitor electrode; and

a controller for controlling the first switch and the second switch,

wherein the controller is configured to:

turn ON the second switch to interconnect the source electrode of the driver and the second capacitor electrode, and, when the second switch is in an ON state, turn ON the first switch to interconnect the data line and the first capacitor electrode to supply the signal voltage to the first capacitor and flow a current between the source electrode of the driver and the second capacitor electrode; and

turn OFF the second switch after an elapse of a predetermined time period after the signal voltage is supplied to the first capacitor to cause non-conduction between the source electrode of the driver and the second capacitor electrode,

whereby a charge accumulated in the first capacitor is discharged when the current flows between the source electrode of the driver and the second capacitor electrode during the predetermined time period.

[Claim 2]

The display panel device according to Claim 1, further comprising:

a second capacitor connected to the second capacitor electrode; and

a bias voltage line for supplying, to the second capacitor, a reverse bias voltage which generates, in the first capacitor, a capacitor potential difference that is greater than a driver threshold voltage of the driver,

wherein the controller is further configured to:

turn ON the second switch to interconnect the source electrode of the driver and the second capacitor electrode, and turn ON the first switch to supply the reverse bias voltage to the second capacitor while a fixed voltage for fixing a voltage of the first capacitor electrode is supplied from the data line, the reverse bias voltage generating, in the first capacitor, the capacitor potential difference that is greater than the driver threshold voltage; and

turn ON the first switch while the driver is in an OFF state and the second switch is in the ON state to supply the signal voltage to the first capacitor electrode after the capacitor potential difference reaches the driver threshold voltage and the driver is in the OFF state.

[Claim 3]

The display panel device according to Claim 2,

wherein the controller is further configured to:

turn ON the first switch to supply the reverse bias voltage to the second capacitor while the fixed voltage for fixing the voltage of the first capacitor electrode is supplied from the data line, the reverse bias voltage generating, in the first capacitor, the capacitor potential difference that is greater than the driver threshold voltage;

turn OFF the first switch; and

turn ON the first switch while the driver is in the OFF state and the second switch is in the ON state to supply the signal voltage to the first capacitor electrode after the capacitor potential difference reaches the driver threshold voltage and the driver is in the OFF state.

[Claim 4]

The display panel device according to Claim 2,

wherein the fixed voltage is set such that, after the capacitor potential difference reaches the driver threshold voltage and the driver is in the OFF state, a luminescence potential difference between the first luminescence electrode and the second luminescence electrode becomes lower than a luminescence threshold voltage of the luminescence element at which the luminescence element produces the luminescence.

[Claim 5]

The display panel device according to Claim 1, further comprising:

a third power line for supplying, to the second capacitor electrode, a reference voltage which generates, in the first capacitor, a capacitor potential difference that is greater than a driver threshold voltage of the driver; and

a third switch switchably interconnecting the second capacitor electrode and the third power line,

wherein the controller is further configured to:

turn ON the third switch to interconnect the second capacitor electrode and the third power line to supply the reference voltage to the second capacitor electrode;

turn ON the first switch to supply a fixed voltage for fixing a voltage of the first capacitor electrode from the data line, and

turn ON the first switch while the second switch is in the ON state and the driver is in an OFF state to supply the signal voltage to the first capacitor electrode after the capacitor potential difference reaches the driver threshold voltage and the driver is in the OFF state.

[Claim 6]

The display panel device according to Claim 5,

wherein the third power line is a scanning line, and the scanning line is configured to turn ON and turn OFF the first switch, and

the scanning line supplies the reference voltage to turn OFF the first switch.

[Claim 7]

The display panel device according to any one of Claims 1 to 6,

wherein a first time constant for turning ON and turning OFF the first switch is at least equal to a second time constant for turning ON and turning OFF the second switch.

[Claim 8]

A display device, comprising:

the display panel device according to any one of Claims 1 to 7; and

a power source that supplies power to the first power line and the second power line,

wherein the luminescence element further includes a luminescent layer sandwiched between the first luminescence electrode and the second luminescence electrode, and

a plurality of luminescence elements including the luminescence element is arranged in a matrix pattern.

[Claim 9]

A display device, comprising:

the display panel device according to any one of Claims 1 to 7; and

a power source that supplies power to the first power line and the second power line,

wherein the luminescence element further includes a luminescent layer sandwiched between the first luminescence electrode and the second luminescence electrode,

a pixel includes the luminescence element, the first capacitor, the driver, the first switch, and the second switch, and

a plurality of pixels including the pixel are arranged in a matrix pattern.

[Claim 10]

The display device according to Claim 8 or Claim 9,

wherein the luminescence element is an organic electroluminescence element.

[Claim 11]

A method of controlling a display device,

wherein the display device includes:

a luminescence element having a first luminescence electrode and a second luminescence electrode;

a first capacitor having a first capacitor electrode and a second capacitor electrode for holding a capacitor voltage;

a driver having a gate electrode, a drain electrode, and a source electrode for driving the luminescence element to produce a luminescence by allowing a drain current corresponding to the capacitor voltage to flow through the luminescence element, the gate electrode being connected to the first capacitor electrode, the source electrode being connected to the first luminescence electrode;

a first power line for determining a potential of the drain electrode of the driver;

a second power line electrically connected to the second luminescence electrode;

a data line for supplying a signal voltage to the first capacitor;

a first switch switchably interconnecting the data line and the first capacitor electrode; and

a second switch switchably interconnecting the source electrode of the driver and the second capacitor electrode, and

the method comprising:

turning ON the second switch to interconnect the source electrode of the driver and the second capacitor electrode, and,

when the second switch is in an ON state, turning ON the first switch to interconnect the data line and the first capacitor electrode to supply the signal voltage to the first capacitor and flow a current between the source electrode of the driver and the second capacitor electrode; and

turning OFF the second switch after an elapse of a predetermined time period after the signal voltage is supplied to the first capacitor to cause non-conduction between the source electrode of the driver and the second capacitor electrode,

whereby a charge accumulated in the first capacitor is discharged when the current flows between the source electrode of the driver and the second capacitor electrode during the predetermined time period.

請求の範囲

[請求項1]　第１電極と第２電極とを有する発光素子と、

電圧を保持するための第１コンデンサと、

ゲート電極が前記第１コンデンサの第１電極に接続され、ソース電極が前記発光素子の第１電極に接続され、前記第１コンデンサに保持された電圧に応じたドレイン電流を前記発光素子に流すことにより前記発光素子を発光させる駆動素子と、

前記駆動素子のドレイン電極の電位を決定するための第１電源線と、

前記発光素子の第２電極に電気的に接続された第２電源線と、

信号電圧を供給するためのデータ線と、

一方の端子が前記データ線に接続され、他方の端子が前記第１コンデンサの第１電極に接続され、前記データ線と前記第１コンデンサの第１電極との導通及び非導通を切り換える第１スイッチング素子と、

一方の端子が前記駆動素子のソース電極に接続され、他方の端子が前記第１コンデンサの第２電極に接続され、前記駆動素子のソース電極と前記第１コンデンサの第２電極との導通及び非導通を切り換える第２スイッチング素子と、

前記第１スイッチング素子及び前記第２スイッチング素子を制御する駆動回路と、を具備し、

前記駆動回路は、

前記第２スイッチング素子をオン状態にして前記駆動素子のソース電極と前記第１コンデンサの第２電極との間が導通した状態で、前記第１スイッチング素子をオン状態にして前記第１コンデンサの第１電極に前記信号電圧を供給し、前記駆動素子のソース電極と前記第１コンデンサの第２電極との間に電流を流させ、

前記第１コンデンサの第１電極に前記信号電圧が供給されてから予め定められた期間の経過後に、前記第２スイッチング素子をオフ状態

にして前記駆動素子のソース電極と前記第１コンデンサの第２電極とを非導通とすることにより、

前記期間内に前記駆動素子のソース電極と前記第１コンデンサの第２電極との間を流れる電流により前記第１コンデンサに蓄積された電荷を放電させる、

表示パネル装置。

[請求項2]　さらに、

前記第１コンデンサの第２電極に接続された第２コンデンサと、

前記駆動素子の閾値電圧より大きな電位差を前記第１コンデンサに生じさせる逆バイアス電圧を前記第２コンデンサに供給するバイアス電圧線とを備え、

前記駆動回路は、

前記第２スイッチング素子をオン状態にして前記駆動素子のソース電極と前記第１コンデンサの第２電極との間を導通させ、

前記第１スイッチング素子をオン状態にして前記第１コンデンサの第１電極の電圧を固定するための固定電圧を前記データ線から供給させつつ、前記駆動素子の閾値電圧より大きな電位差を前記第１コンデンサに生じさせるような前記逆バイアス電圧を前記第２コンデンサに書込み、

前記第１コンデンサの第１電極及び第２電極の電位差が前記駆動素子の閾値電圧に到達して前記駆動素子がオフ状態となるまでの時間が経過した後、前記駆動素子がオフ状態の間に、前記第２スイッチング素子がオン状態のまま、前記第１スイッチング素子をオン状態にして前記第１コンデンサの第１電極に前記信号電圧の供給を開始する、

請求項１に記載の表示パネル装置。

[請求項3]　前記駆動回路は、

前記第１スイッチング素子をオン状態にして前記第１コンデンサの第１電極の電圧を固定するための固定電圧を前記データ線から供給さ

せつつ、前記駆動素子の閾値電圧より大きな電位差を前記第１コンデンサに生じさせるような前記逆バイアス電圧を前記第２コンデンサに書込み、

前記第１スイッチング素子をオフ状態にし、

前記第１コンデンサの第１電極及び第２電極の電位差が前記駆動素子の閾値電圧に到達して前記駆動素子がオフ状態となるまでの時間が経過した後、前記駆動素子がオフ状態の間に、前記第２スイッチング素子がオン状態のまま、前記第１スイッチング素子をオン状態にして前記第１コンデンサの第１電極に前記信号電圧の供給を開始する、

請求項２に記載の表示パネル装置。

[請求項4]　前記固定電圧の電圧値は、

前記第１コンデンサの第１電極及び第２電極の電位差が前記駆動素子の閾値電圧に到達して前記駆動素子がオフ状態となるまでの時間が経過した際に、前記発光素子の第１電極と前記発光素子の第２電極との電位差が、前記発光素子が発光を開始する前記発光素子の閾値電圧より低い電圧となるように予め設定されている、

請求項２に記載の表示パネル装置。

[請求項5]　さらに、

前記第１コンデンサに前記駆動素子の閾値電圧より大きな電位差を生じさせる基準電圧を、前記第１コンデンサの第２電極に供給する第３電源線と、

前記第１コンデンサの第２電極と前記第３電源線とを接続するための第３スイッチング素子とを備え、

前記駆動回路は、

前記第３スイッチング素子をオン状態にして前記第１コンデンサの第２電極に前記基準電圧を供給し、

前記第１スイッチング素子をオン状態にして前記第１コンデンサの第１電極の電圧を固定するための固定電圧を前記データ線から供給さ

せ、

前記第１コンデンサの第１電極及び第２電極の電位差が前記駆動素子の閾値電圧に到達して前記駆動素子がオフ状態となるまでの時間が経過した後、前記第２スイッチング素子がオン状態のまま、前記駆動素子がオフ状態の間に、前記第１スイッチング素子をオン状態にして前記第１コンデンサの第１電極に前記信号電圧の供給を開始する、

請求項１に記載の表示パネル装置。

[請求項6] 前記第３電源線は、前記第１スイッチング素子のオンオフ状態を切り換えるための走査線と共用されており、

前記基準電圧は、前記第１スイッチング素子をオフ状態にするときの前記走査線の電圧である、

請求項５に記載の表示パネル装置。

[請求項7] 前記第１スイッチング素子のオンオフを切り換えるための第１の時定数は、前記第２スイッチング素子のオンオフを切り換えるための第２の時定数以上である、

請求項１～６のうちいずれか１項に記載の表示パネル装置。

[請求項8] 請求項１～７のうちいずれか１項に記載の表示パネル装置と、

前記第１及び第２電源線に電源を供給する電源と、を備え、

前記発光素子は、第１電極と、第２電極と、前記第１電極及び前記第２電極に挟まれた発光層とを含み、

前記発光素子は、少なくとも複数個マトリクス状に配置されている、

表示装置。

[請求項9] 請求項１～７のうちいずれか１項に記載の表示パネル装置と、

前記第１及び第２電源線に電源を供給する電源と、を備え、

前記発光素子は、第１電極と、第２電極と、前記第１電極及び前記第２電極に挟まれた発光層とを含み、

前記発光素子、前記第１コンデンサ、前記駆動素子、前記第１スイ

ッチング素子、及び前記第２スイッチング素子は単位画素の画素回路を構成し、

前記画素回路は、複数個マトリクス状に配置されている、

表示装置。

[請求項10]　前記発光素子は、有機エレクトロルミネッセンス発光素子である、

請求項８または９に記載の表示装置。

[請求項11]　第１電極と第２電極とを有する発光素子と、

電圧を保持するための第１コンデンサと、

ゲート電極が前記第１コンデンサの第１電極に接続され、ソース電極が前記発光素子の第１電極に接続され、前記第１コンデンサに保持された電圧に応じたドレイン電流を前記発光素子に流すことにより前記発光素子を発光させる駆動素子と、

前記駆動素子のドレイン電極の電位を決定するための第１電源線と、

前記発光素子の第２電極に接続された第２電源線と、

信号電圧を供給するためのデータ線と、

一方の端子が前記データ線に接続され、他方の端子が前記第１コンデンサの第１電極に接続され、前記データ線と前記第１コンデンサの第１電極との導通及び非導通を切り換える第１スイッチング素子と、

一方の端子が前記駆動素子のソース電極に接続され、他方の端子が前記第１コンデンサの第２電極に接続され、前記駆動素子のソース電極と前記第１コンデンサの第２電極との導通及び非導通を切り換える第２スイッチング素子とを具備した表示装置の制御方法であって、

前記第２スイッチング素子をオン状態にして前記駆動素子のソース電極と前記第１コンデンサの第２電極との間が導通した状態で、前記第１スイッチング素子をオン状態にして前記第１コンデンサの第１電極に前記信号電圧を供給し、前記駆動素子のソース電極と前記第１コンデンサの第２電極との間に電流を流させ、

前記第１コンデンサの第１電極に前記信号電圧が供給されてから予め定められた期間の経過後に、前記第２スイッチング素子をオフ状態にして前記駆動素子のソース電極と前記第１コンデンサの第２電極とを非導通とすることにより、前記期間内に前記駆動素子のソース電極と前記第１コンデンサの第２電極との間を流れる電流により前記第１コンデンサに蓄積された電荷を放電させる、

表示装置の制御方法。

WRITTEN OPINION OF THE
INTERNATIONAL SEARCHING AUTHORITY

International application No.
PCT/JP2009/006213

Box No. V Reasoned statement under Rule 43*bis*. 2.1(a)(i) with regard to novelty, inventive step and industrial applicability; citations and explanations supporting such statement

1. Statement

Novelty (N)	Claims	1 - 11	Yes
	Claims		No
Inventive step (IS)	Claims	1 - 11	Yes
	Claims		No
Industrial applicability (IA)	Claims	1 - 11	Yes
	Claims		No

2. Citations and explanations

Document 1: JP2008-203655 A (Sony Corporation), September 4, 2008, paragraphs [0030] - [0048], Figs. 12 - 22

Document 2: JP2008-203657 A (Sony Corporation), September 4, 2008, paragraphs [0023] - [0036], Figs. 4 - 6

Document 3: JP2009-204979 A (Sony Corporation), September 10, 2009, paragraphs [0048] - [0108], Figs. 18 - 33

The invention as claimed in Claims 1 to 11 is not disclosed in any of the documents cited in the International Search Report, and thus has novelty and an inventive step.

Form PCT/ISA/237 (Box No. V) (April 2007)

特 許 協 力 条 約

発信人　日本国特許庁（国際調査機関）

代理人
新居広守
様

あて名
〒532-0011
日本国大阪府大阪市淀川区西中島５丁目３番１０号タナカ・イトーピア新大阪ビル６階新居国際特許事務所内

09.12.16

ＰＣＴ

国際調査報告及び国際調査機関の見解書
又は国際調査報告を作成しない旨の決定
の送付の通知書
（法施行規則第 41 条）
［ＰＣＴ規則 44.1］

発送日 （日.月.年）　１５．１２．２００９	
出願人又は代理人 の書類記号　P054559P0	今後の手続きについては、下記１及び４を参照。
国際出願番号 ＰＣＴ／ＪＰ２００９／００６２１３	国際出願日 （日.月.年）　１９．１１．２００９
出願人（氏名又は名称） パナソニック株式会社	

１．☑ 国際調査報告及び国際調査機関の見解書が作成されたこと、及びこの送付書とともに送付することを、出願人に通知する。
ＰＣＴ19条の規定に基づく補正書及び説明書の提出
出願人は、国際出願の請求の範囲を補正することができる（ＰＣＴ規則 46 参照）。
いつ　補正書の提出期間は、通常国際調査報告の送付の日から２月である。
どこへ　直接次の場所へ　The International Bureau of WIPO
34, chemin des Colombettes
1211 Geneva 20, Switzerland
Facsimile No.: +41 22 338 82 70
詳細な手続については、添付用紙の備考を参照すること。

２．☐ 国際調査報告が作成されないこと、及び法第8条第2項（ＰＣＴ17条(2)(a)）の規定による国際調査報告を作成しない旨の決定及び国際調査機関の見解書をこの送付書とともに送付することを、出願人に通知する。

３．☐ 法施行規則第 44 条（ＰＣＴ規則 40.2）に規定する追加手数料の納付に対する異議の申立てに関して、出願人に下記の点を通知する。
☐ 異議の申立てと当該異議についての決定を、その異議の申し立てと当該異議についての決定の両方を指定官庁へ送付することを求める出願人の請求とともに、国際事務局へ送付した。
☐ 当該異議についての決定は、まだ行われていない。決定されしだい出願人に通知する。

４．今後の手続：　出願人は次の点に注意すること。
優先日から１８月経過後、国際出願は国際事務局によりすみやかに国際公開される。出願人が公開の延期を望むときは、国際出願又は優先権の主張の取下げの通知がＰＣＴ規則90の2.1及び90の2.3にそれぞれ規定されているように、国際公開の事務的な準備が完了する前に国際事務局に到達しなければならない。
いくつかの指定官庁については、出願人が国内段階の開始を優先日から３０月まで（官庁によってはさらに遅くまで）延期することを望むときは、優先日から１９月以内に、国際予備審査の請求書が提出されなければならない。そうでなければ、出願人はそれらの指定官庁に対して優先日から２０月以内に、国内段階の開始のための所定の手続を取らなければならない。
その他の指定官庁については、１９月以内に国際予備審査の請求書が提出されない場合にも、３０月の（あるいはさらに遅い）期限が適用される。
様式PCT/IB/301の付属書類を参照。個々の指定官庁で適用される期限の詳細については、ＰＣＴ出願人の手引、第Ⅱ巻、国内段階およびＷＩＰＯインターネットサイトを参照。

名称及びあて名 日本国特許庁（ＩＳＡ／ＪＰ） 郵便番号１００－８９１５ 東京都千代田区霞が関三丁目４番３号	権限のある職員 特　許　庁　長　官 電話番号　０３－３５８１－１１０１　内線　３２２６	２Ｇ	３８０５

注　　意

1．国際調査報告の発送日から起算する条約第19条（1）及び規則46.1に従う国際事務局への補正期間に注意してください。

2．条約22条（2）に規定する期間に注意してください。

3．法律又は契約等の制限により、国際調査報告に記載した非特許文献の写しの一部又は全てが送付されない場合があります。

4．文献の写しの請求について

国際調査報告に記載した文献の複写

特許庁にこれらの引用文献の写しを請求することもできますが、独立行政法人工業所有権情報・研修館（特許庁庁舎２階）で公報類の閲覧・複写および公報以外の文献複写等の取り扱いをしています。

〔担当及び照会先〕

〒１００－００１３　東京都千代田区霞が関３丁目４番３号（特許庁庁舎２階）
独立行政法人工業所有権情報・研修館
【公 報 類】　閲覧部　ＴＥＬ　03－3581－1101　内線3811～2
【公報以外】　資料部　ＴＥＬ　03－3581－1101　内線3831～3

また、（財）日本特許情報機構でも取り扱いをしています。
これらの引用文献の複写を請求する場合は下記の点に注意してください。

〔申込方法〕

（１）特許（実用新案・意匠）公報については、下記の点を明記してください。
○特許・実用新案及び意匠の種類
○出願公告又は出願公開の年次及び番号（又は特許番号、登録番号）
○必要部数

（２）公報以外の文献の場合は、下記の点に注意してください。
○国際調査報告の写しを添付してください（返却します）。

〔申込み及び照会先〕

〒１３５－００１６　東京都江東区東陽４－１－７　佐藤ダイヤビルディング
財団法人　日本特許情報機構　情報業務部業務課
ＴＥＬ　０３－３５０８－２３１３

注意　特許庁に対して文献の写しの請求をすることができる期間は、国際出願日から７年です。

様式ＰＣＴ／ＩＳＡ／２２０の備考

この備考は、ＰＣＴ19条の規定に基づく補正書の提出に関する基本的な指示を与えるためのものである。この備考は特許協力条約並びにこの条約に基づく規則及び実施細則の規定に基づいている。この備考とそれらの規定とが相違する場合には、後者が適用される。詳細な情報については、ＷＩＰＯの出版物であるＰＣＴ出願人の手引も参照すること。

ＰＣＴ19条の規定に基づく補正書の提出に関する指示

出願人は、国際調査報告及び国際調査機関の見解書を受領した後、国際出願の請求の範囲を補正する機会が一回ある。しかし、国際出願のすべての部分（請求の範囲、明細書及び図面）が、国際予備審査の手続においても補正できるもので、例えば出願人が仮保護のために補正書を公開することを希望する場合又は国際公開前に請求の範囲を補正する別の理由がある場合を除き、通常ＰＣＴ19条の規定に基づく補正書を提出する必要はないことを強調しておく。さらに、仮保護は一部の国のみで与えられるだけであることも強調しておく（ＰＣＴ出願人の手引、附録Ｂ１及びＢ２参照）。

補正の対象となるもの

ＰＣＴ19条の規定により請求の範囲のみ補正することができる。
国際段階においてＰＣＴ34条の規定に基づく国際予備審査の手続きにおいて請求の範囲を（更に）補正することができる。
明細書及び図面は、ＰＣＴ34条の規定に基づく国際予備審査の手続においてのみ補正することができる。
国内段階に移行する際、ＰＣＴ28条（又はＰＣＴ41条）の規定により、国際出願のすべての部分を補正することができる。

いつ

国際調査報告の送付の日から２月又は優先日から１６月の内どちらか遅く満了するほうの期間内。しかし、その期間の満了後であっても国際公開の技術的な準備の完了前に国際事務局が補正を受領した場合には、その補正書は、期間内に受理されたものとみなすことを強調しておく（ＰＣＴ規則46.1）。

補正書を提出すべきところ

補正書は、国際事務局のみに提出でき、受理官庁又は国際調査機関には提出してはいけない（ＰＣＴ規則46.2）。
国際予備審査の請求書を提出した／する場合については、以下を参照すること。

どのように

１以上の請求の範囲の削除、１以上の新たな請求の範囲の追加、又は１以上の請求の範囲の記載の補正による。
差替え用紙は、補正の結果、出願当初の用紙と相違する請求の範囲の各用紙毎に提出する。
差替え用紙に記載されているすべての請求の範囲には、アラビア数字を付さなければならない。請求の範囲を削除する場合、その他の請求の範囲の番号を付け直す必要はない。請求の範囲の番号を付け直す場合には、連続番号で付け直さなければならない（ＰＣＴ実施細則第205号(b)）。
補正は国際公開の言語で行う。

補正書にどのような書類を添付しなければならないか

書簡（ＰＣＴ実施細則第205号(b)）

補正書には書簡を添付しなければならない。
書簡は国際出願及び補正された請求の範囲とともに公開されることはない。これを「ＰＣＴ19条(1)に規定する説明書」と混同してはならない（「ＰＣＴ19条(1)に規定する説明書」については、以下を参照）。
書簡は、英語又は仏語を選択しなければならない。ただし、国際出願の言語が英語の場合、書簡は英語で、仏語の場合、書簡は仏語で記載しなければならない。
書簡には、出願時の請求の範囲と補正された請求の範囲との相違について表示しなければならない。特に、国際出願に記載した各請求の範囲との関連で次の表示（２以上の請求の範囲についての同一の表示する場合は、まとめることができる。）をしなければならない。

(i) この請求の範囲は変更しない。
(ii) この請求の範囲は削除する。
(iii) この請求の範囲は追加である。
(iv) この請求の範囲は出願時の１以上の請求の範囲と差し替える。
(v) この請求の範囲は出願時の請求の範囲の分割の結果である。

次に、添付する書簡中での、補正についての説明の例を示す。

１．［請求の範囲の一部の補正によって請求の範囲の項数が４８から５１になった場合］：
“請求の範囲１－２９、３１、３２、３４、３５、３７－４８項は、同じ番号のもとに補正された請求の範囲と置き換えられた。請求の範囲３０、３３及び３６項は変更なし。新たに請求の範囲４９－５１項が追加された。”

２．［請求の範囲の全部の補正によって請求の範囲の項数が１５から１１になった場合］：
“請求の範囲１－１５項は、補正された請求の範囲１－１１項に置き換えられた。”

３．［原請求の範囲の項数が１４で、補正が一部の請求の範囲の削除と新たな請求の範囲の追加を含む場合］：
“請求の範囲１－６及び１４項は変更なし。請求の範囲７－１３は削除。新たに請求の範囲１５、１６及び１７項を追加。”又は
“請求の範囲７－１３は削除。新たに請求の範囲１５、１６及び１７項を追加。その他の全ての請求の範囲は変更なし。”

４．［各種の補正がある場合］：
“請求の範囲１－１０項は変更なし。請求の範囲１１－１３、１８及び１９項は削除。請求の範囲１４、１５及び１６項は補正された請求の範囲１４項に置き換えられた。請求の範囲１７項は補正された請求の範囲１５、１６及び１７項に分割された。新たに請求の範囲２０及び２１項が追加された。”

“ＰＣＴ19条(1)の規定に基づく説明書”（ＰＣＴ規則46.4）

補正書には、補正並びにその補正が明細書及び図面に与える影響についての説明書を提出することができる（明細書及び図面はＰＣＴ19条(1)の規定に基づいては補正できない）。

説明書は、国際出願及び補正された請求の範囲とともに公開される。

説明書は、国際公開の言語で作成しなければならない。

説明書は、簡潔でなければならず、英語の場合又は英語に翻訳した場合に５００語を越えてはならない。

説明書は、出願時の請求の範囲と補正された請求の範囲との相違を示す書簡と混同してはならない。説明書を、その書簡に代えることはできない。説明書は別紙で提出しなければならず、見出しを付すものとし、その見出しは“ＰＣＴ19条(1)の規定に基づく説明書”の語句を用いることが望ましい。

説明書には、国際調査報告又は国際調査報告に列記された文献との関連性に関して、これらを誹謗する意見を記載してはならない。国際調査報告に列記された特定の請求の範囲に関連する文献についての言及は、当該請求の範囲の補正に関してのみ行うことができる。

国際予備審査の請求書が提出されている場合

ＰＣＴ19条の規定に基づく補正書及び添付する説明書の提出の時に国際予備審査の請求書が既に提出されている場合には、出願人は、補正書（及び説明書）を国際事務局に提出すると同時にその写し及び必要な場合、その翻訳文を国際予備審査機関にも提出することが望ましい（ＰＣＴ規則55.3(a)、62.2の第１文を参照）。詳細は国際予備審査請求書（ＰＣＴ／ＩＰＥＡ／４０１）の注意書参照。

国際予備審査の請求がされた場合は、見解書を作成した国際調査機関が国際予備審査機関としては行動しないという特定の場合を除いて、国際調査機関の見解書は国際予備審査機関の見解書とみなされる。この場合、様式ＰＣＴ／ＩＳＡ／２２０の送付日から３月又は優先日から２２月のうちいずれか遅く満了する期限が経過するまでに、出願人は国際予備審査機関に、適当な場合は補正書とともに、答弁書を提出することができる（ＰＣＴ規則43の2.1(c)）。

国内段階に移行するための国際出願の翻訳に関して

国内段階に移行する際、ＰＣＴ19条の規定に基づいて補正された請求の範囲の翻訳を出願時の請求の範囲の翻訳の代わりに又は追加して、指定官庁／選択官庁に提出しなければならないこともあるので、出願人は注意されたい。

指定官庁／選択官庁の詳細な要求については、ＰＣＴ出願人の手引きの第Ⅱ巻を参照。

特許協力条約

PCT

国際調査報告

'09.12.16

（法８条、法施行規則第40、41条）
〔ＰＣＴ18条、ＰＣＴ規則43、44〕

出願人又は代理人の書類記号 P054559P0	今後の手続きについては、様式ＰＣＴ／ＩＳＡ／２２０及び下記５を参照すること。	
国際出願番号 ＰＣＴ／ＪＰ２００９／００６２１３	国際出願日 (日.月.年) １９．１１．２００９	優先日 (日.月.年)
出願人（氏名又は名称） パナソニック株式会社		

国際調査機関が作成したこの国際調査報告を法施行規則第41条（ＰＣＴ18条）の規定に従い出願人に送付する。
この写しは国際事務局にも送付される。

この国際調査報告は、全部で ２ ページである。

☐ この調査報告に引用された先行技術文献の写しも添付されている。

１．国際調査報告の基礎
ａ．言語に関し、この国際調査は以下のものに基づき行った。
☑ 出願時の言語による国際出願
☐ 出願時の言語から国際調査のための言語である ＿＿＿＿＿＿ 語に翻訳された、この国際出願の翻訳文（ＰＣＴ規則12.3(a)及び23.1(b)）

ｂ．☐ この国際調査報告は、ＰＣＴ規則91の規定により国際調査機関が認めた又は国際調査機関に通知された明らかな誤りの訂正を考慮して作成した（ＰＣＴ規則43.6の2(a)）。

ｃ．☐ この国際出願は、ヌクレオチド又はアミノ酸配列を含んでいる（第Ｉ欄参照）。

２．☐ 請求の範囲の一部の調査ができない（第Ⅱ欄参照）。

３．☐ 発明の単一性が欠如している（第Ⅲ欄参照）。

４．発明の名称は ☑ 出願人が提出したものを承認する。
☐ 次に示すように国際調査機関が作成した。

＿＿＿＿＿＿＿＿＿＿＿＿＿＿＿＿

５．要約は ☑ 出願人が提出したものを承認する。
☐ 第Ⅳ欄に示されているように、法施行規則第47条第１項（ＰＣＴ規則38.2）の規定により国際調査機関が作成した。出願人は、この国際調査報告の発送の日から１月以内にこの国際調査機関に意見を提出することができる。

６．図面に関して
ａ．要約書とともに公表される図は、
第 ２ 図とする。 ☑ 出願人が示したとおりである。
☐ 出願人は図を示さなかったので、国際調査機関が選択した。
☐ 本図は発明の特徴を一層よく表しているので、国際調査機関が選択した。

ｂ．☐ 要約とともに公表される図はない。

国際調査報告

国際出願番号　ＰＣＴ／ＪＰ２００９／００６２１３

Ａ．　発明の属する分野の分類（国際特許分類（ＩＰＣ））

Int.Cl.　G09G3/30(2006.01)i, G09G3/20(2006.01)i, H01L51/50(2006.01)i

Ｂ．　調査を行った分野

調査を行った最小限資料（国際特許分類（ＩＰＣ））

Int.Cl.　G09G3/30, G09G3/20, H01L51/50

最小限資料以外の資料で調査を行った分野に含まれるもの

日本国実用新案公報	１９２２－１９９６年
日本国公開実用新案公報	１９７１－２００９年
日本国実用新案登録公報	１９９６－２００９年
日本国登録実用新案公報	１９９４－２００９年

国際調査で使用した電子データベース（データベースの名称、調査に使用した用語）

Ｃ．　関連すると認められる文献

引用文献のカテゴリー＊	引用文献名　及び一部の箇所が関連するときは、その関連する箇所の表示	関連する請求項の番号
A	JP 2008-203655 A（ソニー株式会社）2008.09.04, 段落【００３０】－【００４８】, 図１２－２２（ファミリーなし）	1-11
A	JP 2008-203657 A（ソニー株式会社）2008.09.04, 段落【００２３】－【００３６】, 図４－６ & US 2008/0198111 A1 & KR 10-2008-0077906 A & CN 101251975 A	1-4, 7-11
A	JP 2009-204979 A（ソニー株式会社）2009.09.10, 段落【００４８】－【０１０８】, 図１８－３３（ファミリーなし）	1-4, 7-11

☐　Ｃ欄の続きにも文献が列挙されている。

☐　パテントファミリーに関する別紙を参照。

＊　引用文献のカテゴリー

「Ａ」特に関連のある文献ではなく、一般的技術水準を示すもの

「Ｅ」国際出願日前の出願または特許であるが、国際出願日以後に公表されたもの

「Ｌ」優先権主張に疑義を提起する文献又は他の文献の発行日若しくは他の特別な理由を確立するために引用する文献（理由を付す）

「Ｏ」口頭による開示、使用、展示等に言及する文献

「Ｐ」国際出願日前で、かつ優先権の主張の基礎となる出願の日の後に公表された文献

「Ｔ」国際出願日又は優先日後に公表された文献であって出願と矛盾するものではなく、発明の原理又は理論の理解のために引用するもの

「Ｘ」特に関連のある文献であって、当該文献のみで発明の新規性又は進歩性がないと考えられるもの

「Ｙ」特に関連のある文献であって、当該文献と他の１以上の文献との、当業者にとって自明である組合せによって進歩性がないと考えられるもの

「&」同一パテントファミリー文献

国際調査を完了した日 ０３．１２．２００９	国際調査報告の発送日 １５．１２．２００９
国際調査機関の名称及びあて先 日本国特許庁（ＩＳＡ／ＪＰ） 郵便番号１００－８９１５ 東京都千代田区霞が関三丁目４番３号	特許庁審査官（権限のある職員）　２Ｇ　３８０５ 長井　真一 電話番号　０３－３５８１－１１０１　内線　３２２６

特許協力条約

発信人　日本国特許庁（国際調査機関）

代理人
新居広守
様

あて名
〒532-0011
日本国大阪府大阪市淀川区西中島５丁目３番１０号
タナカ・イトーピア新大阪ビル６階新居国際特許事務所内

09.12.16

ＰＣＴ
国際調査機関の見解書
（法施行規則第 40 条の 2）
〔ＰＣＴ規則 43 の 2.1〕

発送日 (日.月.年)	１５．１２．２００９
出願人又は代理人 の書類記号　P054559P0	今後の手続きについては、下記２を参照すること。

国際出願番号	国際出願日	優先日
ＰＣＴ／ＪＰ２００９／００６２１３	(日.月.年)　１９．１１．２００９	(日.月.年)

国際特許分類（ＩＰＣ）Int.Cl. G09G3/30(2006.01)i, G09G3/20(2006.01)i, H01L51/50(2006.01)i

出願人（氏名又は名称）
パナソニック株式会社

１．この見解書は次の内容を含む。

- ☑ 第Ｉ欄　見解の基礎
- ☐ 第Ⅱ欄　優先権
- ☐ 第Ⅲ欄　新規性、進歩性又は産業上の利用可能性についての見解の不作成
- ☐ 第Ⅳ欄　発明の単一性の欠如
- ☑ 第Ⅴ欄　ＰＣＴ規則 43 の 2.1(a)(i)に規定する新規性、進歩性又は産業上の利用可能性についての見解、それを裏付けるための文献及び説明
- ☐ 第Ⅵ欄　ある種の引用文献
- ☐ 第Ⅶ欄　国際出願の不備
- ☐ 第Ⅷ欄　国際出願に対する意見

２．今後の手続き
国際予備審査の請求がされた場合は、出願人がこの国際調査機関とは異なる国際予備審査機関を選択し、かつ、その国際予備審査機関がＰＣＴ規則 66.1 の 2(b)の規定に基づいて国際調査機関の見解書を国際予備審査機関の見解書とみなさない旨を国際事務局に通知していた場合を除いて、この見解書は国際予備審査機関の最初の見解書とみなされる。

この見解書が上記のように国際予備審査機関の見解書とみなされる場合、様式ＰＣＴ／ＩＳＡ／２２０を送付した日から３月又は優先日から２２月のうちいずれか遅く満了する期限が経過するまでに、出願人は国際予備審査機関に、適当な場合は補正書とともに、答弁書を提出することができる。

さらなる選択肢は、様式ＰＣＴ／ＩＳＡ／２２０を参照すること。

３．さらなる詳細は、様式ＰＣＴ／ＩＳＡ／２２０の備考を参照すること。

見解書を作成した日
０３．１２．２００９

名称及びあて先 日本国特許庁（ＩＳＡ／ＪＰ） 郵便番号１００－８９１５ 東京都千代田区霞が関三丁目４番３号	特許庁審査官（権限のある職員） 長井　真一 電話番号　０３－３５８１－１１０１　内線　３２２６	２Ｇ	３８０５

国際調査機関の見解書

国際出願番号　ＰＣＴ／ＪＰ２００９／００６２１３

第Ｉ欄　見解の基礎

１．言語に関し、この見解書は以下のものに基づき作成した。

☑ 出願時の言語による国際出願

☐ 出願時の言語から国際調査のための言語である ＿＿＿＿＿＿＿＿ 語に翻訳された、この国際出願の翻訳文（ＰＣＴ規則12.3(a)及び23.1(b)）

２．☐ この見解書は、ＰＣＴ規則 91 の規定により国際調査機関が認めた又は国際調査機関に通知された明らかな誤りの訂正を考慮して作成した（ＰＣＴ規則 43 の 2.1(b)）。

３．この国際出願で開示されたヌクレオチド又はアミノ酸配列に関して、以下に基づき見解書を作成した。

ａ．タイプ　☐ 配列表

☐ 配列表に関連するテーブル

ｂ．フォーマット　☐ 紙形式

☐ 電子形式

ｃ．提出時期　☐ 出願時の国際出願に含まれていたもの

☐ この国際出願と共に電子形式により提出されたもの

☐ 出願後に、調査のために、この国際調査機関に提出されたもの

４．☐ さらに、配列表又は配列表に関連するテーブルを提出した場合に、出願後に提出した配列若しくは追加して提出した配列が出願時に提出した配列と同一である旨、又は、出願時の開示を超える事項を含まない旨の陳述書の提出があった。

５．補足意見：

国際調査機関の見解書

国際出願番号　ＰＣＴ／ＪＰ２００９／００６２１３

第Ｖ欄　新規性、進歩性又は産業上の利用可能性についてのＰＣＴ規則 43 の 2.1(a)(i)に定める見解、それを裏付ける文献及び説明

１．　見解

新規性（N）	請求項	1-11	有
	請求項		無
進歩性（ＩＳ）	請求項	1-11	有
	請求項		無
産業上の利用可能性（ＩＡ）	請求項	1-11	有
	請求項		無

２．　文献及び説明

文献１：JP 2008-203655 A（ソニー株式会社）2008.09.04，段落【００３０】－【００４８】，図１２－２２

文献２：JP 2008-203657 A（ソニー株式会社）2008.09.04，段落【００２３】－【００３６】，図４－６

文献３：JP 2009-204979 A（ソニー株式会社）2009.09.10，段落【００４８】－【０１０８】，図１８－３３

請求項１－１１に係る発明は、国際調査報告で引用された上記何れの文献にも開示されておらず、新規性及び進歩性を有する。

UNITED STATES PATENT AND TRADEMARK OFFICE

Commissioner for Patents
United States Patent and Trademark Office
P.O. Box 1450
Alexandria, VA 22313-1450
www.uspto.gov

GREENBLUM & BERNSTEIN, P.L.C.
1950 ROLAND CLARKE PLACE
RESTON VA 20191

MAILED
MAR 27 2012
OFFICE OF PETITIONS

In re Application of
Masafumi Matsui et al
Application No.: 13/035,132
Filed: February 25, 2011
Attorney Docket No.: P38257
For: DISPLAY PANEL DEVICE, DISPLAY DEVICE, AND CONTROL METHOD THEREOF

: DECISION ON REQUEST TO
: PARTICIPATE IN THE PATENT
: PROSECUTION HIGHWAY
: PROGRAM AND PETITION
: TO MAKE SPECIAL UNDER
: 37 CFR 1.102(a)

This is a decision on the request to participate in the PCT Patent Prosecution Highway (PCT-PPH) pilot program and the petition under 37 CFR 1.102(a), filed on December 14, 2011, to make the above-identified application special.

The request and petition are **DISMISSED**.

Discussion

A grantable request to participate in the PCT-PPH pilot program and petition to make special require:

(1) The U.S. application must have an eligible relationship to one or more PCT applications where the ISA or IPEA are the JPO, EPO, KIPO, IPAU, Russia, Spain, Finland, Austria, or USPTO;

(2) At least one claim in the PCT application has novelty, inventive step, and industrial applicability and must be free of any observations in Box VIII in the latest work product in the international stage or applicant must identify and explain why the claim(s) is/are not subject to the observation in Box VIII;

(3) Applicant must submit a copy of the claim(s) from the PCT application(s) that have novelty, inventive step, and industrial applicability along with an English translation thereof and a statement that the English translation is accurate, if the claims are not in the English language;

(4) All the claims in the U.S. application must sufficiently correspond or be amended to sufficiently correspond to the claim(s) that have novelty, inventive step, and industrial applicability in the PCT application(s);

(5) Examination of the U.S. application has not begun;

(6) Applicant must submit a copy of the latest international work product from the PCT application indicating that the claim(s) have novelty, inventive step, and industrial applicability along with an English translation thereof.

(7) Applicant must submit an IDS listing the documents cited by the PCT examiner in the international work product along with copies of documents except U.S. patents or U.S. patent application publications.

(8) Applicant is required to submit a claims correspondence table in English which indicates how all the claims in the U.S. application correspond to the claims indicated as having novelty, inventive step and industrial applicability in the latest international work product.

Requirements (1), (3-5), and (7-8) above are considered to have been met. However, the request to participate in the PPH pilot program and petition fail to meet requirements (6) and (2).

Regarding requirement (6), applicant has failed to provide a complete English translation of the Written Opinion (PCT/ISA/237).

Regarding requirement (2), it cannot be determined whether requirement (2) has been met since applicant has failed to provide a complete English translation of the Written Opinion (PCT/ISA/237).

Applicant is given **ONE** opportunity within a time period of **ONE MONTH or THIRTY DAYS**, whichever is longer, from the mailing date of this decision to correct the deficiencies. **NO EXTENSION OF TIME UNDER 37 CFR 1.136 IS PERMITTED.** If the deficiencies are not corrected with the time period given, the application will await action in its regular turn.

Response must be filed via the Electronic Filing System (EFS) using the document description: Petition to make special under PCT – Patent Pros Hwy. Any preliminary amendments and IDS submitted with the PPH documents must be separately indexed as a preliminary amendment and IDS, respectively.

Telephone inquiries concerning this decision should be directed to Irvin Dingle at 571-272-3210.

All other inquiries concerning the examination or status of the application is accessible in the PAIR system at http://www.uspto.gov/ebc/index.html.

David Bucci
Petitions Examiner
Office of Petition

UNITED STATES PATENT AND TRADEMARK OFFICE

Commissioner for Patents
United States Patent and Trademark Office
P.O. Box 1450
Alexandria, VA 22313-1450
www.uspto.gov

LERNER, DAVID, LITTENBERG,
KRUMHOLZ & MENTLIK
600 SOUTH AVENUE WEST
WESTFIELD, NJ 07090

MAILED
APR 12 2011
OFFICE OF PETITIONS

In re Application of	:	
Larry SCHWARTZ	:	
Application No. 13/035,149	:	DECISION ON PETITION TO MAKE
Filed: February 25, 2011	:	SPECIAL UNDER 37 CFR 1.102(c)(1)
Attorney Docket No. **ENVIO 3.0-001 DIV**	:	
	:	

This is a decision on the petition under 37 CFR 1.102(c)(1), filed February 25, 2011, to make the above-identified application special based on applicant's age as set forth in M.P.E.P. § 708.02, Section IV.

The petition is **GRANTED**.

A grantable petition to make an application special under 37 CFR 1.102(c)(1) and MPEP § 708.02, Section IV: Applicant's Age must be accompanied by evidence showing that at least one of the applicants is 65 years of age, or more, such as a birth certificate or a statement by applicant. No fee is required

The instant petition includes the certification of attorney Stephen B. Goldman registration no. 28,512, attesting to the age of inventor Larry Schwarts. Accordingly, the above-identified application has been accorded "special" status.

Inquiries concerning either the examination or status of the application should be directed to the Technology Center at 571-272-3600.

Telephone inquiries concerning this decision should be directed to the undersigned at 571-272-7253.

The application is being forwarded to the Technology Center Art Unit 3636 for action on the merits commensurate with this decision.

/Monica A. Graves/
Petitions Examiner, Office of Petitions

UNITED STATES PATENT AND TRADEMARK OFFICE

UNITED STATES DEPARTMENT OF COMMERCE
United States Patent and Trademark Office
Address: COMMISSIONER FOR PATENTS
P.O. Box 1450
Alexandria, Virginia 22313-1450
www.uspto.gov

APPLICATION NO.	FILING DATE	FIRST NAMED INVENTOR	ATTORNEY DOCKET NO.	CONFIRMATION NO.
13/035,167	02/25/2011	Kazushi Watanabe	00684.002569.13	2271

5514 7590 02/22/2012
FITZPATRICK CELLA HARPER & SCINTO
1290 Avenue of the Americas
NEW YORK, NY 10104-3800

EXAMINER
LEE, SUSAN SHUK YIN

ART UNIT	PAPER NUMBER
2884	

MAIL DATE	DELIVERY MODE
02/22/2012	PAPER

Please find below and/or attached an Office communication concerning this application or proceeding.

The time period for reply, if any, is set in the attached communication.

UNITED STATES PATENT AND TRADEMARK OFFICE

Commissioner for Patents
United States Patent and Trademark Office
P.O. Box 1450
Alexandria, VA 22313-1450
www.uspto.gov

FITZPATRICK CELLA HARPER & SCINTO
1290 Avenue of the Americas
NEW YORK, NY 10104-3800

In re Application of Kazushi Watanabe et al.
Appl. No.: 13/035,167
Filed: February 25. 2011
Attorney Docket No.: 00684.002569.13
Title: COUPLING PART, PHOTOSENSITIVE DRUM, PROCESS CARTRIDGE AND ELECTROPHOTOGRAPHIC IMAGE FORMING APPARATUS

DECISION ON PETITION UNDER 7 C.F.R.§ 1.59

This is a response to the petitions under 37 CFR 1.59(b), filed November 09, 2011, to expunge information from the above identified application.

The decision on the petitions will be held in abeyance until allowance of the application or mailing of an *Ex parte* Quayle action or a Notice of Abandonment, at which time the petition will be decided.

Petitioner requests that the Information Disclosure Statement (IDS), submitted as "Material Subject to a Protective Order" and "Proprietary Material Not Open to the Public" on November 9, 2011 be also expunged from the record.

It is noted that the **petition does not meet all the requirements for a grantable petition to expunge** because petitioner did not include a clear statement that the information to be expunged is trade secret material, proprietary and/or subject to protective order. Unless properly supplemented, the petition would very likely be denied after completion of the prosecution.

The decision on the petition is held in abeyance because prosecution on the merits has not started. Accordingly, it is not appropriate to make a final determination of whether or not the information requested to be expunged is "material," with "materiality" being defined as any information which the examiner considers as being important to a determination of patentability of the claims. Thus, the decision on the petition to expunge must be held in abeyance at this time.

During prosecution on the merits, the examiner will determine whether or not any of the identified documents is considered to be "material." If the information is not considered by the examiner to be material, the information will be removed from the official file.

Any inquiry regarding this decision should be directed to Hien H. Phan, Quality Assurance Specialist, at (571) 272-1606.

Joseph Thomas, TC Director
Technology Center 2800
Semiconductors, Electrical and Optical
Systems and Components

PTO/SB/20PCT-JP (05-10)
Approved for use through 01/31/2012. OMB 0651-0058
U.S. Patent and Trademark Office; U. S. DEPARTMENT OF COMMERCE

Under the Paperwork Reduction Act of 1995, no persons are required to respond to a collection of information unless it displays a valid OMB control number.

REQUEST FOR PARTICIPATION IN THE PATENT COOPERATION TREATY - PATENT PROSECUTION HIGHWAY (PCT-PPH) PILOT PROGRAM BETWEEN THE JAPAN PATENT OFFICE (JPO) AND THE USPTO

Application No:	13/035,170	Filing date:	February 25, 2011
First Named Inventor:	Masafumi Matsui		
Title of the Invention:	Display Panel Device, Display Device, and Control Method Thereof		

THIS REQUEST FOR PARTICIPATION IN THE PCT-PPH PILOT PROGRAM ALONG WITH THE REQUIRED DOCUMENTS MUST BE SUBMITTED VIA EFS-WEB. INFORMATION REGARDING EFS-WEB IS AVAILABLE AT HTTP://WWW.USPTO.GOV/EBC/EFS_HELP.HTML

APPLICANT HEREBY REQUESTS PARTICIPATION IN THE PCT-PPH PROGRAM AND PETITIONS TO MAKE THE ABOVE-IDENTIFIED APPLICATION SPECIAL UNDER THE PCT-PPH PROGRAM.

The above-identified application is (1) a national stage entry of the corresponding PCT application, or (2) a national stage entry of another PCT application which claims priority to the corresponding PCT application, or (3) a national application that claims domestic/ foreign priority to the corresponding PCT application, or (4) a national application which forms the basis for the priority claim in the corresponding PCT application, or (5) a continuing application of a U.S. application that satisfies one of (1) to (4) above, or (6) a U.S. application that claims domestic benefit to a U.S. provisional application which forms the basis for the priority claim in the corresponding PCT application.

The corresponding PCT application number(s) is/are: PCT/JP2009/006215

The international date of the corresponding PCT application(s) is/are: November 19, 2009

I. List of Required Documents:

a. **A copy of the latest international work product (WO/ISA, WO/IPEA, or IPER) in the above–identified corresponding PCT application(s)**

☑ Is attached.

☐ Is not attached because the document is already in the U.S. application.

b. **A copy of all claims which were indicated as having novelty, inventive step and industrial applicability in the above-identified corresponding PCT application(s).**

☑ Is attached.

☐ Is not attached because the document is already in the U.S. application.

c. **English translations of the documents in a. and b. above are attached (if the documents are not in the English language). A statement that the English translation is accurate is attached for the document in b. above.**

This collection of information is required by 35 U.S.C. 119, 37 CFR 1.55, and 37 CFR 1.102(d). The information is required to obtain or retain a benefit by the public, which is to file (and by the USPTO to process) an application. Confidentiality is governed by 35 U.S.C. 122 and 37 CFR 1.11 and 1.14. This collection is estimated to take 2 hours to complete, including gathering, preparing, and submitting the completed application form to the USPTO. Time will vary depending upon the individual case. Any comments on the amount of time you require to complete this form and/or suggestions for reducing this burden should be sent to the Chief Information Officer, U.S. Patent and Trademark Office, U.S. Department of Commerce, P.O. Box 1450, Alexandria, VA 22313-1450. DO NOT SEND FEES OR COMPLETED FORMS TO THIS ADDRESS.

Approved for use through 01/31/2012. OMB 0651-0058
U.S.Patent and Trademark Office; U.S. DEPARTMENT OF COMMERCE

Under the Paperwork Reduction Act of 1995, no persons are required to respond to a collection of information unless it displays a valid OMB control number.

REQUEST FOR PARTICIPATION IN THE PCT-PPH PILOT PROGRAM BETWEEN THE JPO AND THE USPTO

(continued)

Application No.:	13/035,170
First Named Inventor:	Masafumi Matsui

d. **(1) An information disclosure statement listing the documents cited in the international work products (ISR, WO/ISA, WO/IPEA, IPER) of the corresponding PCT application.**

☐ Is attached

☑ Has already been filed in the above-identified U.S. application on May 10, 2011

(2) Copies of all documents (except) for U.S. patents or U.S. patent application publications)

☐ Are attached.

☑ Have already been filed in the above-identified U.S. application on May 10, 2011

II. Claims Correspondence Table:

Claims in US Application	Patentable Claims in the corresponding PCT Application	Explanation regarding the correspondence
1	1	Each claim has been amended to improve clarity, grammar, and syntax.
2	2	The claims have also been amended to utilize proper claim format and to
3	3	eliminate language informalities.
4	4	
5	5	Additionally, the claims have been amended to eliminate potential
6	6	means-plus-function claim language and to eliminate multiple
7	7	dependencies.
8	8	
9	9	
10	10	
11	14	
12	11	
13	12	
14	13	
15	15	
16	17	
17	16	
18	18	

III. All the claims in the US application sufficiently correspond to the patentable claims in the corresponding PCT application.

Signature		William Pieprz	Date 12/13/2011
Name (Print/Typed)	Bruce H. Bernstein	Reg. No. 33,630	Registration Number 29027

Privacy Act Statement

The **Privacy Act of 1974 (P.L. 93-579)** requires that you be given certain information in connection with your submission of the attached form related to a patent application or patent. Accordingly, pursuant to the requirements of the Act, please be advised that: (1) the general authority for the collection of this information is 35 U.S.C. 2(b)(2); (2) furnishing of the information solicited is voluntary; and (3) the principal purpose for which the information is used by the U.S. Patent and Trademark Office is to process and/or examine your submission related to a patent application or patent. If you do not furnish the requested information, the U.S. Patent and Trademark Office may not be able to process and/or examine your submission, which may result in termination of proceedings or abandonment of the application or expiration of the patent.

The information provided by you in this form will be subject to the following routine uses:

1. The information on this form will be treated confidentially to the extent allowed under the Freedom of Information Act (5 U.S.C. 552) and the Privacy Act (5 U.S.C 552a). Records from this system of records may be disclosed to the Department of Justice to determine whether disclosure of these records is required by the Freedom of Information Act.
2. A record from this system of records may be disclosed, as a routine use, in the course of presenting evidence to a court, magistrate, or administrative tribunal, including disclosures to opposing counsel in the course of settlement negotiations.
3. A record in this system of records may be disclosed, as a routine use, to a Member of Congress submitting a request involving an individual, to whom the record pertains, when the individual has requested assistance from the Member with respect to the subject matter of the record.
4. A record in this system of records may be disclosed, as a routine use, to a contractor of the Agency having need for the information in order to perform a contract. Recipients of information shall be required to comply with the requirements of the Privacy Act of 1974, as amended, pursuant to 5 U.S.C. 552a(m).
5. A record related to an International Application filed under the Patent Cooperation Treaty in this system of records may be disclosed, as a routine use, to the International Bureau of the World Intellectual Property Organization, pursuant to the Patent Cooperation Treaty.
6. A record in this system of records may be disclosed, as a routine use, to another federal agency for purposes of National Security review (35 U.S.C. 181) and for review pursuant to the Atomic Energy Act (42 U.S.C. 218(c)).
7. A record from this system of records may be disclosed, as a routine use, to the Administrator, General Services, or his/her designee, during an inspection of records conducted by GSA as part of that agency's responsibility to recommend improvements in records management practices and programs, under authority of 44 U.S.C. 2904 and 2906. Such disclosure shall be made in accordance with the GSA regulations governing inspection of records for this purpose, and any other relevant (*i.e.*, GSA or Commerce) directive. Such disclosure shall not be used to make determinations about individuals.
8. A record from this system of records may be disclosed, as a routine use, to the public after either publication of the application pursuant to 35 U.S.C. 122(b) or issuance of a patent pursuant to 35 U.S.C. 151. Further, a record may be disclosed, subject to the limitations of 37 CFR 1.14, as a routine use, to the public if the record was filed in an application which became abandoned or in which the proceedings were terminated and which application is referenced by either a published application, an application open to public inspection or an issued patent.
9. A record from this system of records may be disclosed, as a routine use, to a Federal, State, or local law enforcement agency, if the USPTO becomes aware of a violation or potential violation of law or regulation.

P38259.A02

IN THE UNITED STATES PATENT AND TRADEMARK OFFICE

Applicants	: Masafumi MATSUI et al.	Art Unit	: 2629
Appl. No.	: 13/035,170 (Continuation of PCT/JP2009/006215)	Examiner	: Richard A. Hjerpe
I.A. Filed	: November 19, 2009	Conf. No.	: 2278
For	: DISPLAY PANEL DEVICE, DISPLAY DEVICE, AND CONTROL METHOD THEREOF		

STATEMENT IN SUPPORT OF REQUEST FOR PARTICIPATION IN THE PATENT COOPERATION TREATY - PATENT PROSECUTION HIGHWAY (PCT-PPH) PROGRAM BETWEEN THE JAPAN PATENT OFFICE AND THE USPTO

Commissioner for Patents
U.S. Patent and Trademark Office
Customer Service Window, Mail Stop PPH
Randolph Building
401 Dulany Street
Alexandria VA 22314

Sir:

In support of the concurrently filed Request for Participation in the PCT-PPH Program between the JPO and the USPTO, Applicants bring the following information to the attention of the U.S. Patent and Trademark Office:

1. The present application is a national application claiming foreign/domestic priority to PCT/JP2009/006215. That is, the present application is a continuation of PCT/JP2009/006215.

2. A copy of the latest international work product in PCT/JP2009/006215, and a partial English language translation thereof, are submitted concurrently with this Request. Applicants note that no observation is described in Box VIII.

3. A copy of the claims in PCT/JP2009/006215 having novelty, an inventive step, and industrial applicability, and a verified English language translation thereof, are submitted concurrently with this Request.

4. Copies of the documents cited in the latest international work product were submitted in an Information Disclosure Statement (IDS) filed on May 10, 2011. Nevertheless, an English language Abstract and machine translation of JP 2008-032866, which is cited in the latest international work product and which was submitted in the IDS, is submitted concurrently with this Request for the convenience of the Examiner. Applicants note that corresponding English language documents of JP 2008-203657, JP 2009-204979, and JP 2008-009198, which are also cited in the latest international work product and which were also submitted in the IDS, are listed in the IDS.

If there should be any questions concerning this application, the Examiner is invited to contact the undersigned at the telephone number listed below.

Respectfully submitted,
Masafumi MATSUI et al.

Bruce H. Bernstein
Reg. No. 29027

William Pieprz
Reg. No. 33,630

December 13, 2011
GREENBLUM & BERNSTEIN, P.L.C.
1950 Roland Clarke Place
Reston, VA 20191
(703) 716-1191

IN THE UNITED STATES PATENT AND TRADEMARK OFFICE

In re Application of

Serial NO.: 13/035,170
Filing Date: February 25, 2011
For: DISPLAY PANEL DEVICE, DISPLAY DEVICE, AND CONTROL METHOD THEREOF

VERIFICATION OF TRANSLATION

Honorable Commissioner of Patents and Trademarks
Washington, D.C. 20231

Sir:

Kazumi KAWATA, c/o NII Patent Firm, 6F, Tanaka Ito Pia Shin-Osaka Bldg., 3-10, Nishi Nakajima 5-chome, Yodogawa-ku, Osaka-city, Osaka 532-0011, Japan declares:

(1) that he knows well both the Japanese and English languages;
(2) that he translated the claims from PCT/JP2009/006215 from Japanese to English;
(3) that the attached English translation is a true and correct translation of the claims from PCT/JP2009/006215 to the best of his knowledge and belief; and
(4) that all statements made of his own knowledge are true and that all statements made on information and belief are believed to be true, and further that these statements are made with the knowledge that willful false statements and the like are punishable by fine or imprisonment, or both, under 18 U.S.C. 1001, and that such false statements may jeopardize the validity of the application or any patent thereon.

This 6th day of December, 2011

Kazumi KAWATA

[CLAIMS]

[Claim 1]

A display panel device, comprising:

a luminescence element including a first luminescence electrode and a second luminescence electrode;

a first capacitor including a first capacitor electrode and a second capacitor electrode that holds a capacitor voltage;

a driver including a driver gate electrode, a driver drain electrode, and a driver source electrode that drives the luminescence element to produce a luminescence by flowing a drain current corresponding to the capacitor voltage through the luminescence element, the driver gate electrode connected to the first capacitor electrode, the driver source electrode connected to the second capacitor electrode;

a first power line that determines a potential of the driver drain electrode;

a second power line electrically connected to the second luminescence electrode;

a data line that supplies a signal voltage to the first capacitor electrode;

a first switch that switchably interconnects the data line and the first capacitor electrode;

a bias voltage line that supplies, while the signal voltage is supplied to the first capacitor electrode, a predetermined bias voltage to the second capacitor electrode such that a capacitor potential difference between the first capacitor electrode and the second capacitor electrode is at most equal to a driver threshold voltage of the driver;

a second capacitor that interconnects the second capacitor electrode and the bias voltage line; and

a controller that controls the first switch, a supply of the predetermined bias voltage from the bias voltage line, and a supply of the signal voltage from the data line,

wherein the controller is configured to:

write the predetermined bias voltage to the second

capacitor via the bias voltage line to supply the second capacitor electrode with the predetermined bias voltage such that the capacitor potential difference is at most equal to the driver threshold voltage, even when the signal voltage is supplied to the first capacitor electrode, to prevent a flow of the drain current between the driver source electrode and the second capacitor electrode;

supply the signal voltage to the first capacitor electrode when the flow of the drain current between the driver source electrode and the second capacitor electrode is prevented and the first switch is in an ON state;

write a reverse bias voltage corresponding to the predetermined bias voltage to the second capacitor via the bias voltage line to cause the flow of the drain current between the driver source electrode and the second capacitor electrode when the signal voltage is supplied to the first capacitor electrode; and

turn OFF the first switch after an elapse of a predetermined period of time after causing the flow of the drain current between the driver source electrode and the second capacitor electrode to stop the supply of the signal voltage to the first capacitor electrode,

whereby an electrical charge accumulated in the first capacitor is discharged during the predetermined period when the flow of the drain current between the driver source electrode and the second capacitor electrode is caused.

[Claim 2]

The display panel device according to Claim 1,

wherein, when the reverse bias voltage corresponding to the predetermined bias voltage is written to the second capacitor via the bias voltage line, a voltage is written to the second capacitor in accordance with a first gradual change from the predetermined bias voltage to the reverse bias voltage.

[Claim 3]

The display panel device according to Claim 2, further

comprising:

a scanning line that switchably interconnects the data line and the first capacitor electrode with the first switch by supplying a scanning signal voltage to a first switch gate electrode of the first switch,

wherein, when the first switch is in an OFF state after the elapse of the predetermined period of time, the controller supplies the scanning signal voltage from the scanning line to the first switch, the scanning signal voltage being supplied in accordance with a second gradual change.

[Claim 4]

The display panel device according to Claim 3,

wherein a degree of the first gradual change from the predetermined bias voltage to the reverse bias voltage is equal to a degree of the second gradual change in the scanning signal voltage that is supplied to the first switch.

[Claim 5]

The display panel device according to Claim 2,

wherein the luminescence element further includes a luminescent layer sandwiched between the first luminescence electrode and the second luminescence electrode,

at least the luminescence element, the first capacitor, the driver, and the second capacitor compose a pixel,

the display device includes a plurality of pixels that includes the pixel, and

the first gradual change from the predetermined bias voltage to the reverse bias voltage corresponds to a change in an amount of the reverse bias voltage written to the second capacitor, over a period of time from a writing start to a writing end, in one of the plurality of pixels that is located in an area of the display panel device that is farthest from the controller.

[Claim 6]

The display panel device according to Claim 5, further comprising:

a scanning line that switchably interconnects the data line and the first capacitor electrode with the first switch by supplying a scanning signal voltage to a first switch gate electrode of the first switch,

wherein a second gradual change in the scanning signal voltage supplied to the first switch gate electrode corresponds to a change in a voltage of the first switch gate electrode in the one the plurality of pixels that is located in the area of the display panel device that is farthest from the controller, the second gradual change being caused by the controller when the controller turns OFF the first switch after the elapse of the predetermined period of time.

[Claim 7]

The display panel device according to Claim 1, further comprising:

a third power line that supplies a reference voltage to the second capacitor electrode; and

a second switch that switchably interconnects the second capacitor electrode and the third power line,

wherein the reference voltage causes the capacitor potential difference to be greater than the driver threshold voltage, and

the controller is further configured to:

turn ON the second switch to supply the reference voltage to the second capacitor electrode;

turn ON the first switch to supply a fixed voltage to fix a voltage of the first capacitor electrode;

supply, after the potential difference in the first capacitor reaches the driver threshold voltage and the driver is in an OFF state, the predetermined bias voltage via the bias voltage line to prevent the flow of the drain current between the driver source electrode and the second capacitor electrode while the driver is in the OFF state; and

turn ON the first switch when the flow of the drain current between the driver source electrode and the second capacitor

electrode is prevented, and supply the signal voltage to the first capacitor electrode.

[Claim 8]

The display panel device according to Claim 7,

wherein a voltage value of the predetermined bias voltage is preset such that, after the capacitor potential difference reaches the driver threshold voltage and the driver is in the OFF state, a luminescence potential difference between the first luminescence electrode and the second luminescence electrode is less than a luminescence threshold voltage of the luminescence element, the luminescence element producing the luminescence at the luminescence threshold voltage.

[Claim 9]

The display panel device according to Claim 8,

wherein the third power line is a scanning line, and the scanning line is configured to switchably interconnect the data line and the first capacitor electrode with the first switch by supplying a scanning signal voltage to a first switch gate electrode of the first switch, and

the reference voltage is a voltage of the scanning line that that turns OFF the first switch to disconnect the data line and the first capacitor electrode.

[Claim 10]

The display panel device according to Claim 1, further comprising:

a second switch that switchably interconnects the first luminescence electrode and the driver source electrode,

wherein the controller is configured to turn OFF the second switch to disconnect the first luminescence electrode and the driver source electrode during the predetermined period of time.

[Claim 11]

The display panel device according to Claim 1, further comprising:

a second switch that switchably interconnects the first luminescence electrode and the driver source electrode,

wherein, when the predetermined bias voltage is written to the second capacitor via the bias voltage line and the signal voltage is supplied to the first capacitor electrode, the controller is configured to turn OFF the second switch to disconnect the first luminescence electrode and the driver source electrode.

[Claim 12]

The display panel device according to Claim 1,

wherein the bias voltage line further supplies a second reverse bias voltage to the second capacitor to cause the capacitor potential difference to be greater than the driver threshold voltage, and

the controller is further configured to:

write the second reverse bias voltage to the second capacitor while the first switch is in the ON state and supply a fixed voltage to the first capacitor to fix a voltage of the first capacitor to cause the capacitor potential difference to be greater than the driver threshold voltage to cause the flow of the drain current between the driver source electrode and the second capacitor electrode;

stop the flow of the drain current between the driver source electrode and the second capacitor electrode, after the capacitor potential difference reaches the driver threshold voltage to turn OFF the driver; and

turn ON the first switch to supply the signal voltage to the first capacitor electrode when the flow of the drain current between the driver source electrode and the second capacitor electrode is prevented while the driver is in an OFF state.

[Claim 13]

The display panel device according to Claim 12, further comprising:

a second switch that switchably interconnects the first luminescence electrode and the driver source electrode,

wherein the controller is further configured to turn OFF the second switch to disconnect the first luminescence electrode and the driver source electrode during a period of time from when the second reverse bias voltage is supplied to the second capacitor to when the capacitor potential difference reaches the driver threshold voltage to turn OFF the driver.

[Claim 14]

The display panel device according to any one of Claims 10, 11, and 13,

wherein, after the electrical charge accumulated in the first capacitor is discharged during the predetermined period of time, the controller is configured to turn ON the second switch to interconnect the first luminescence electrode and the driver source electrode to flow the drain current, corresponding to the capacitor potential difference, between the first power line and the second power line.

[Claim 15]

A display device, comprising:

the display panel device according to any one of Claims 1 to 14; and

a power source that supplies power to the first power line and the second power line,

wherein the luminescence element further includes a luminescent layer sandwiched between the first luminescence electrode and the second luminescence electrode, and

the luminescence element is included in a matrix in which at least a plurality of the luminescence element is are arranged.

[Claim 16]

A display device, comprising:

the display panel device according to any one of Claims 1 to 14; and

a power source that supplies power to the first power line and the second power line,

wherein the luminescence element further includes a luminescent layer sandwiched between the first luminescence electrode and the second luminescence electrode,

the luminescence element, the first capacitor, the driver, the first switch, and the second switch compose a pixel, and

the pixel is included in a matrix in which a plurality of pixels that included the pixel is arranged.

[Claim 17]

The display device according to one of Claims 15 and 16,

wherein the luminescence element is an organic electroluminescence element.

[Claim 18]

A method of controlling a display device,

wherein the display device includes:

a luminescence element including a first luminescence electrode and a second luminescence electrode;

a first capacitor including a first capacitor electrode and a second capacitor electrode that holds a capacitor voltage;

a driver including a driver gate electrode, a driver drain electrode, and a driver source electrode that drives the luminescence element to produce a luminescence by flowing a drain current corresponding to the capacitor voltage through the luminescence element, the driver gate electrode connected to the first capacitor electrode, the driver source electrode connected to the second capacitor electrode;

a first power line that determines a potential of the driver drain electrode;

a second power line electrically connected to the second luminescence electrode;

a data line that supplies a signal voltage to the first capacitor electrode;

a first switch that switchably interconnects the data line and the first capacitor electrode;

a bias voltage line that supplies, while the signal voltage is supplied to the first capacitor electrode, a predetermined bias voltage to the second capacitor electrode such that a capacitor potential difference between the first capacitor electrode and the second capacitor electrode is at most equal to a driver threshold voltage of the driver; and

a second capacitor that interconnects the second capacitor electrode and the bias voltage line, and

the control method comprising:

writing the predetermined bias voltage to the second capacitor via the bias voltage line to supply the second capacitor electrode with the voltage such that the capacitor potential difference is at most equal to the driver threshold voltage, even when the signal voltage is supplied to the first capacitor electrode, to prevent a flow of the drain current between the driver source electrode and the second capacitor electrode;

supplying the signal voltage to the first capacitor electrode when the flow of the drain current between the driver source electrode and the second capacitor electrode is prevented and when the first switch is in an ON state;

writing a reverse bias voltage corresponding to the predetermined bias voltage to the second capacitor via the bias voltage line to cause the flow of the drain current between the driver source electrode and the second capacitor electrode when the signal voltage is supplied to the first capacitor electrode; and

turning OFF the first switch after an elapse of a predetermined period of time after causing the flow of the drain current between the driver source electrode and the second capacitor electrode to stop the supply of the signal voltage to the first capacitor electrode,

whereby an electrical charge accumulated in the first capacitor is discharged during the predetermined period when the flow of the drain current between the driver source electrode and the

second capacitor electrode is caused.

請求の範囲

[請求項1]　第１電極と第２電極とを有する発光素子と、

電圧を保持するための第１コンデンサと、

ゲート電極が前記第１コンデンサの第１電極に接続され、ソース電極が前記第１コンデンサの第２電極に接続され、前記第１コンデンサに保持された電圧に応じたドレイン電流を前記発光素子に流すことにより前記発光素子を発光させる駆動素子と、

前記駆動素子のドレイン電極の電位を決定するための第１電源線と、

前記発光素子の第２電極に電気的に接続された第２電源線と、

信号電圧を供給するためのデータ線と、

一方の端子が前記データ線に接続され、他方の端子が前記第１コンデンサの第１電極に接続され、前記データ線と前記第１コンデンサの第１電極との導通及び非導通を切り換える第１スイッチング素子と、

前記第１コンデンサの第１電極に信号電圧が供給された状態で、前記第１コンデンサの第１電極と第２電極間の電位差が前記駆動素子の閾値電圧以下となる所定のバイアス電圧を前記第１コンデンサの第２電極に供給するためのバイアス電圧線と、

前記第１コンデンサの第２電極と前記バイアス電圧線との間に設けられた第２コンデンサと、

前記第１スイッチング素子の制御、前記バイアス電圧線による前記所定のバイアス電圧の供給制御、及び前記データ線による信号電圧の供給制御を実行する駆動回路と、を具備し、

前記駆動回路は、

前記バイアス電圧線を介して前記所定のバイアス電圧を前記第２コンデンサに書込むことで、前記第１コンデンサの第１電極に信号電圧を供給する状態となっても前記第１コンデンサの第２電極に対する第１電極の電位が前記駆動素子の閾値電圧以下となるような前記所定の

バイアス電圧を前記第１コンデンサの第２電極に供給し、これにより前記駆動素子のソース電極と前記第１コンデンサの第２電極との間に前記ドレイン電流が流れない状態とし、

前記駆動素子のソース電極と前記第１コンデンサの第２電極との間に前記ドレイン電流が流れない状態で、かつ、前記第１スイッチング素子がオン状態で前記第１コンデンサの第１電極に前記信号電圧を供給し、

前記第１コンデンサの第１電極に前記信号電圧が供給されている間に、前記バイアス電圧線を介して前記所定のバイアス電圧に対応する逆バイアス電圧を前記第２コンデンサに書込むことで、前記駆動素子のソース電極と前記第１コンデンサの第２電極との間に前記ドレイン電流を流し、

前記駆動素子のソース電極と前記第１コンデンサの第２電極との間に前記ドレイン電流を流してから予め定められた期間の経過後に、前記第１スイッチング素子をオフ状態にして前記第１コンデンサの第１電極への前記信号電圧の供給を停止させ、前記期間内に前記駆動素子のソース電極と前記第１コンデンサの第２電極との間を流れるドレイン電流により前記第１コンデンサに蓄積された電荷を放電させる、

表示パネル装置。

[請求項2]　前記バイアス電圧線を介して前記所定のバイアス電圧に対応する逆バイアス電圧を前記第２コンデンサに書込む際、前記所定のバイアス電圧から前記逆バイアス電圧に向けて段階的に電圧を変化させる、

請求項１に記載の表示パネル装置。

[請求項3]　さらに、

前記第１スイッチング素子のゲート電極に走査信号電圧を供給して前記第１スイッチング素子の導通及び非導通を切り換える走査線を備え、

前記駆動回路は、

前記駆動素子のソース電極と前記第１コンデンサの第２電極とを導通させてから予め定められた期間の経過後に、前記第１スイッチング素子をオフ状態にする際、前記走査線から第１スイッチング素子へ前記走査信号電圧を段階的に変化させて出力する、

請求項２に記載の表示パネル装置。

[請求項4] 前記所定のバイアス電圧から前記逆バイアス電圧に向けての段階的な電圧変化の度合いと、前記第１スイッチング素子へ供給する走査信号電圧の段階的な変化の度合いは同じである、

請求項３に記載の表示パネル装置。

[請求項5] 前記発光素子は、第１電極と、第２電極と、前記第１電極及び前記第２電極に挟まれた発光層とを含み、

少なくとも前記発光素子、前記第１コンデンサ、前記駆動素子及び前記第２コンデンサは単位画素の画素回路を構成し、

前記駆動回路が前記所定のバイアス電圧から前記逆バイアス電圧に向けて出力させる電圧の段階的な変化は、前記駆動回路から最も遠い前記表示パネル装置の領域に配置された画素回路において、前記第２コンデンサへの前記逆バイアス電圧の書込み開始から書込み終了までの電圧の書込み量の変化に対応している、

請求項２に記載の表示パネル装置。

[請求項6] さらに、

前記第１スイッチング素子のゲート電極に走査信号電圧を供給して前記第１スイッチング素子の導通及び非導通を切り換える走査線を備え、

前記駆動回路が、前記駆動素子のソース電極と前記第１コンデンサの第２電極とを導通させてから予め定められた期間の経過後に、前記第１スイッチング素子をオフ状態にする際、前記駆動回路が前記第１スイッチング素子のゲート電極へ出力する走査信号電圧の段階的な変化は、前記駆動回路から最も遠い前記表示パネル装置の領域に配置さ

れた画素回路における前記第１スイッチング素子のゲート電極の電圧の変化に対応している、

請求項５に記載の表示パネル装置。

[請求項7]　さらに、

前記第１コンデンサの第２電極に基準電圧を供給する第３電源線と、

前記第１コンデンサの第２電極と前記第３電源線との導通及び非導通を切り換える第２スイッチング素子とを備え、

前記基準電圧は、前記駆動素子の閾値電圧より大きな電位差を前記第１コンデンサに生じさせるための電圧であり、

前記駆動回路は、

前記第２スイッチング素子をオン状態にして前記第１コンデンサの第２電極に前記基準電圧を供給し、

前記第１スイッチング素子をオン状態にして前記第１コンデンサの第１電極の電圧を固定するための固定電圧を供給し、

前記第１コンデンサの第１電極及び第２電極の電位差が前記駆動素子の閾値電圧に到達して前記駆動素子がオフ状態となるまでの時間の経過後、前記駆動素子がオフ状態の間に前記バイアス電圧線を介して前記所定のバイアス電圧を供給して前記駆動素子のソース電極と前記第１コンデンサの第２電極との間に前記ドレイン電流が流れない状態とし、

前記駆動素子のソース電極と前記第１コンデンサの第２電極との間に前記ドレイン電流が流れない状態で、前記第１スイッチング素子をオン状態にして前記第１コンデンサの第１電極に前記信号電圧の供給を開始する、

請求項１に記載の表示装置。

[請求項8]　前記所定のバイアス電圧の電圧値は、

前記第１コンデンサの第１電極及び第２電極の電位差が前記駆動素

子の閾値電圧に到達して前記駆動素子がオフ状態となるまでの時間が経過した際に、前記発光素子の第１電極と前記発光素子の第２電極との電位差が、前記発光素子が発光を開始する前記発光素子の閾値電圧より低い電圧となるように予め設定されている、

請求項７に記載の表示パネル装置。

[請求項9]　前記第３電源線は、前記第１スイッチング素子のゲート電極に走査信号電圧を供給して前記第１スイッチング素子の導通及び非導通を切り換える走査線と共用されており、

前記基準電圧は、前記第１スイッチング素子をオフ状態にするときの前記走査線の電圧である、

請求項８に記載の表示パネル装置。

[請求項10]　さらに、

前記発光素子の第１電極と前記駆動素子のソース電極との導通及び非導通を切り換える第２スイッチング素子を備え、

前記駆動回路は、前記期間において、前記第２スイッチング素子をオフ状態にして前記発光素子の第１電極と前記駆動素子のソース電極とを非導通とする、

請求項１に記載の表示パネル装置。

[請求項11]　さらに、

前記発光素子の第１電極と前記駆動素子のソース電極との導通及び非導通を切り換える第２スイッチング素子を備え、

前記駆動回路は、前記バイアス電圧線を介して前記所定のバイアス電圧を前記第２コンデンサに書込み、前記第１コンデンサの第１電極に信号電圧を供給している間、

前記第２スイッチング素子をオフ状態にして前記発光素子の第１電極と前記駆動素子のソース電極とを非導通とする、

請求項１に記載の表示パネル装置。

[請求項12]　前記バイアス電圧線は、さらに、前記駆動素子の閾値電圧より大き

な電位差を前記第１コンデンサに生じさせるための第２逆バイアス電圧を前記第２コンデンサに供給し、

前記駆動回路は、

前記第１スイッチング素子をオン状態にして前記第１コンデンサの第１電極の電圧を固定するための固定電圧を供給しつつ、前記第２逆バイアス電圧を前記第２コンデンサに書込むことで、前記駆動素子の閾値電圧より大きな電位差を前記第１コンデンサに生じさせ、前記駆動素子のソース電極と前記第１コンデンサの第２電極との間に前記ドレイン電流を流し、

前記第１コンデンサの第１電極及び第２電極の電位差が前記駆動素子の閾値電圧に到達して前記駆動素子がオフ状態となるまでの時間が経過することにより前記駆動素子のソース電極と前記第１コンデンサの第２電極との間を流れる前記ドレイン電流を停止させ、

前記駆動素子がオフ状態の間に、前記駆動素子のソース電極と前記第１コンデンサの第２電極との間を流れる前記ドレイン電流が停止している状態で前記第１スイッチング素子をオン状態にして前記第１コンデンサの第１電極に前記信号電圧の供給を開始する、

請求項１に記載の表示パネル装置。

[請求項13]　さらに、

前記発光素子の第１電極と前記駆動素子のソース電極との導通及び非導通を切り換える第２スイッチング素子を備え、

前記駆動回路は、前記第２コンデンサに前記第２逆バイアス電圧の供給を開始してから、前記第１コンデンサの第１電極及び第２電極の電位差が前記駆動素子の閾値電圧に到達して前記駆動素子がオフ状態となるまでの間、前記第２スイッチング素子をオフ状態にして前記発光素子の第１電極と前記駆動素子のソース電極とを非導通とする、

請求項１２に記載の表示パネル装置。

[請求項14]　前記駆動回路は、

前記期間内に前記第１コンデンサに蓄積された電荷を放電させた後、

前記第２スイッチング素子をオン状態にして前記発光素子の第１電極と前記駆動素子のソース電極とを導通させ、前記第１コンデンサに保持された電位差に対応するドレイン電流を前記第１電源線と前記第２電源線との間に流す、

請求項１０、請求項１１及び請求項１３のいずれか１項に記載の表示パネル装置。

[請求項15]　請求項１～１４のうちいずれか１項に記載の表示パネル装置と、

前記第１及び第２電源線に電源を供給する電源と、を備え、

前記発光素子は、前記第１電極と、前記第２電極と、前記第１電極及び前記第２電極に挟まれた発光層とを含み、

前記発光素子は、少なくとも複数個マトリクス状に配置されている表示装置。

[請求項16]　請求項１～１４のうちいずれか１項に記載の表示パネル装置と、

前記第１及び第２電源線に電源を供給する電源と、を備え、

前記発光素子は、前記第１電極と、前記第２電極と、前記第１電極及び前記第２電極に挟まれた発光層とを含み、

前記発光素子、前記第１コンデンサ、前記駆動素子、前記第１スイッチング素子、及び前記第２スイッチング素子は単位画素の画素回路を構成し、

前記画素回路は、複数個マトリクス状に配置されている、

表示装置。

[請求項17]　前記発光素子は、有機エレクトロルミネッセンス発光素子である、

請求項１５または１６に記載の表示装置。

[請求項18]　第１電極と第２電極とを有する発光素子と、

電圧を保持するための第１コンデンサと、

ゲート電極が前記第１コンデンサの第１電極に接続され、ソース電

極が前記第１コンデンサの第２電極に接続され、前記第１コンデンサに保持された電圧に応じたドレイン電流を前記発光素子に流すことにより前記発光素子を発光させる駆動素子と、

前記駆動素子のドレイン電極の電位を決定するための第１電源線と、

前記発光素子の第２電極に電気的に接続された第２電源線と、

信号電圧を供給するためのデータ線と、

一方の端子が前記データ線に接続され、他方の端子が前記第１コンデンサの第１電極に接続され、前記データ線と前記第１コンデンサの第１電極との導通及び非導通を切り換える第１スイッチング素子と、

前記第１コンデンサの第１電極に信号電圧が供給された状態で、前記第１コンデンサの第１電極と第２電極間の電位差が前記駆動素子の閾値電圧以下となる所定のバイアス電圧を前記第１コンデンサの第２電極に供給するためのバイアス電圧線と、

前記第１コンデンサの第２電極と前記バイアス電圧線との間に設けられた第２コンデンサとを具備した表示装置の制御方法であって、

前記バイアス電圧線を介して前記所定のバイアス電圧を前記第２コンデンサに書込むことで、前記第１コンデンサの第１電極に信号電圧を供給する状態となっても前記第１コンデンサの第２電極に対する第１電極の電位が前記駆動素子の閾値電圧以下となるような電圧を前記第１コンデンサの第２電極に供給し、これにより前記駆動素子のソース電極と前記第１コンデンサの第２電極との間に前記ドレイン電流が流れない状態とし、

前記駆動素子のソース電極と前記第１コンデンサの第２電極との間に前記ドレイン電流が流れない状態で、前記第１スイッチング素子をオン状態にして前記第１コンデンサの第１電極に前記信号電圧を供給し、

前記第１コンデンサの第１電極に前記信号電圧が供給されている間

に、前記バイアス電圧線を介して前記所定のバイアス電圧に対応する逆バイアス電圧を前記第２コンデンサに書込むことで、前記駆動素子のソース電極と前記第１コンデンサの第２電極との間に前記ドレイン電流を流し、

前記駆動素子のソース電極と前記第１コンデンサの第２電極とを導通させてから予め定められた期間の経過後に、前記第１スイッチング素子をオフ状態にして前記第１コンデンサの第１電極への前記信号電圧の供給を停止させ、前記期間内に前記駆動素子のソース電極と前記第１コンデンサの第２電極との間を流れる電流により前記第１コンデンサに蓄積された電荷を放電させる、

表示装置の制御方法。

WRITTEN OPINION OF THE
INTERNATIONAL SEARCHING AUTHORITY

International application No.
PCT/JP2009/006215

Box No. V Reasoned statement under Rule 43*bis*. 2.1(a)(i) with regard to novelty, inventive step and industrial applicability; citations and explanations supporting such statement

1. Statement

Novelty (N)	Claims	1 - 18	Yes
	Claims		No
Inventive step (IS)	Claims	1 - 18	Yes
	Claims		No
Industrial applicability (IA)	Claims	1 - 18	Yes
	Claims		No

2. Citations and explanations

Document 1: JP2008-203657 A (Sony Corporation), September 4, 2008, paragraphs [0023] - [0036], Figs. 4 - 6

Document 2: JP2009-204979 A (Sony Corporation), September 10, 2009, paragraphs [0048] - [0108], Figs. 18 - 33

Document 3: JP2008-032866 A (Sony Corporation), February 14, 2008, entire Description, all figures

Document 4: JP2008-009198 A (Sony Corporation), January 17, 2008, entire Description, all figures

The invention as claimed in Claims 1 to 18 is not disclosed in any of the documents cited in the International Search Report, and thus has novelty and an inventive step.

Form PCT/ISA/237 (Box No. V) (April 2007)

特許協力条約

発信人　日本国特許庁（国際調査機関）

代理人
新居広守
様

あて名
〒532-0011
日本国大阪府大阪市淀川区西中島５丁目３番１０号タナカ・イトーピア新大阪ビル６階新居国際特許事務所内

09.12.16

PCT

国際調査報告及び国際調査機関の見解書
又は国際調査報告を作成しない旨の決定
の送付の通知書
（法施行規則第41条）
［ＰＣＴ規則44.1］

	発送日（日.月.年）　15. 12. 2009
出願人又は代理人の書類記号　P054561P0	今後の手続きについては、下記１及び４を参照。
国際出願番号　ＰＣＴ／ＪＰ２００９／００６２１５	国際出願日（日.月.年）　19. 11. 2009
出願人（氏名又は名称）パナソニック株式会社	

1．☑ 国際調査報告及び国際調査機関の見解書が作成されたこと、及びこの送付書とともに送付することを、出願人に通知する。
ＰＣＴ19条の規定に基づく補正書及び説明書の提出
出願人は、国際出願の請求の範囲を補正することができる（ＰＣＴ規則46参照）。
いつ　補正書の提出期間は、通常国際調査報告の送付の日から２月である。
どこへ　直接次の場所へ　The International Bureau of WIPO
34, chemin des Colombettes
1211 Geneva 20, Switzerland
Facsimile No.: +41 22 338 82 70
詳細な手続については、添付用紙の備考を参照すること。

2．☐ 国際調査報告が作成されないこと、及び法第8条第2項（ＰＣＴ17条(2)(a)）の規定による国際調査報告を作成しない旨の決定及び国際調査機関の見解書をこの送付書とともに送付することを、出願人に通知する。

3．☐ 法施行規則第44条（ＰＣＴ規則40.2）に規定する追加手数料の納付に対する異議の申立てに関して、出願人に下記の点を通知する。
☐ 異議の申立てと当該異議についての決定を、その異議の申し立てと当該異議についての決定の両方を指定官庁へ送付することを求める出願人の請求とともに、国際事務局へ送付した。
☐ 当該異議についての決定は、まだ行われていない。決定されしだい出願人に通知する。

4．今後の手続：　出願人は次の点に注意すること。
優先日から１８月経過後、国際出願は国際事務局によりすみやかに国際公開される。出願人が公開の延期を望むときは、国際出願又は優先権の主張の取下げの通知がＰＣＴ規則90の2.1及び90の2.3にそれぞれ規定されているように、国際公開の事務的な準備が完了する前に国際事務局に到達しなければならない。
いくつかの指定官庁については、出願人が国内段階の開始を優先日から３０月まで（官庁によってはさらに遅くまで）延期することを望むときは、優先日から１９月以内に、国際予備審査の請求書が提出されなければならない。そうでなければ、出願人はそれらの指定官庁に対して優先日から２０月以内に、国内段階の開始のための所定の手続を取らなければならない。
その他の指定官庁については、１９月以内に国際予備審査の請求書が提出されない場合にも、３０月の（あるいはさらに遅い）期限が適用される。
様式PCT/IB/301の付属書類を参照。個々の指定官庁で適用される期限の詳細については、ＰＣＴ出願人の手引、第Ⅱ巻、国内段階およびＷＩＰＯインターネットサイトを参照。

名称及びあて名 日本国特許庁（ＩＳＡ／ＪＰ） 郵便番号１００－８９１５ 東京都千代田区霞が関三丁目４番３号	権限のある職員 特　許　庁　長　官 電話番号　０３－３５８１－１１０１　内線　３２２６	２Ｇ	３８０５

注　　意

1．国際調査報告の発送日から起算する条約第19条（1）及び規則46.1に従う国際事務局への補正期間に注意してください。

2．条約22条（2）に規定する期間に注意してください。

3．法律又は契約等の制限により、国際調査報告に記載した非特許文献の写しの一部又は全てが送付されない場合があります。

4．文献の写しの請求について

国際調査報告に記載した文献の複写

特許庁にこれらの引用文献の写しを請求することもできますが、独立行政法人工業所有権情報・研修館（特許庁庁舎２階）で公報類の閲覧・複写および公報以外の文献複写等の取り扱いをしています。

〔担当及び照会先〕

〒１００－００１３　東京都千代田区霞が関３丁目４番３号（特許庁庁舎２階）
独立行政法人工業所有権情報・研修館
【公 報 類】　閲覧部　ＴＥＬ　03－3581－1101　内線3811～2
【公報以外】　資料部　ＴＥＬ　03－3581－1101　内線3831～3

また、（財）日本特許情報機構でも取り扱いをしています。
これらの引用文献の複写を請求する場合は下記の点に注意してください。

〔申込方法〕

（１）特許（実用新案・意匠）公報については、下記の点を明記してください。
○特許・実用新案及び意匠の種類
○出願公告又は出願公開の年次及び番号（又は特許番号、登録番号）
○必要部数

（２）公報以外の文献の場合は、下記の点に注意してください。
○国際調査報告の写しを添付してください（返却します）。

〔申込み及び照会先〕

〒１３５－００１６　東京都江東区東陽４－１－７　佐藤ダイヤビルディング
財団法人　日本特許情報機構　情報業務部業務課
ＴＥＬ　０３－３５０８－２３１３

注意　特許庁に対して文献の写しの請求をすることができる期間は、国際出願日から７年です。

様式ＰＣＴ／ＩＳＡ／２２０の備考

この備考は、ＰＣＴ19条の規定に基づく補正書の提出に関する基本的な指示を与えるためのものである。この備考は特許協力条約並びにこの条約に基づく規則及び実施細則の規定に基づいている。この備考とそれらの規定とが相違する場合には、後者が適用される。詳細な情報については、ＷＩＰＯの出版物であるＰＣＴ出願人の手引も参照すること。

ＰＣＴ19条の規定に基づく補正書の提出に関する指示

出願人は、国際調査報告及び国際調査機関の見解書を受領した後、国際出願の請求の範囲を補正する機会が一回ある。しかし、国際出願のすべての部分（請求の範囲、明細書及び図面）が、国際予備審査の手続においても補正できるもので、例えば出願人が仮保護のために補正書を公開することを希望する場合又は国際公開前に請求の範囲を補正する別の理由がある場合を除き、通常ＰＣＴ19条の規定に基づく補正書を提出する必要はないことを強調しておく。さらに、仮保護は一部の国のみで与えられるだけであることも強調しておく（ＰＣＴ出願人の手引、附録Ｂ１及びＢ２参照）。

補正の対象となるもの

ＰＣＴ19条の規定により請求の範囲のみ補正することができる。
国際段階においてＰＣＴ34条の規定に基づく国際予備審査の手続きにおいて請求の範囲を（更に）補正することができる。
明細書及び図面は、ＰＣＴ34条の規定に基づく国際予備審査の手続においてのみ補正することができる。
国内段階に移行する際、ＰＣＴ28条（又はＰＣＴ41条）の規定により、国際出願のすべての部分を補正することができる。

いつ

国際調査報告の送付の日から２月又は優先日から１６月の内どちらか遅く満了するほうの期間内。しかし、その期間の満了後であっても国際公開の技術的な準備の完了前に国際事務局が補正を受領した場合には、その補正書は、期間内に受理されたものとみなすことを強調しておく（ＰＣＴ規則46.1）。

補正書を提出すべきところ

補正書は、国際事務局のみに提出でき、受理官庁又は国際調査機関には提出してはいけない（ＰＣＴ規則46.2）。
国際予備審査の請求書を提出した／する場合については、以下を参照すること。

どのように

１以上の請求の範囲の削除、１以上の新たな請求の範囲の追加、又は１以上の請求の範囲の記載の補正による。
差替え用紙は、補正の結果、出願当初の用紙と相違する請求の範囲の各用紙毎に提出する。
差替え用紙に記載されているすべての請求の範囲には、アラビア数字を付さなければならない。請求の範囲を削除する場合、その他の請求の範囲の番号を付け直す必要はない。請求の範囲の番号を付け直す場合には、連続番号で付け直さなければならない（ＰＣＴ実施細則第205号(b)）。
補正は国際公開の言語で行う。

補正書にどのような書類を添付しなければならないか

書簡（ＰＣＴ実施細則第205号(b)）

補正書には書簡を添付しなければならない。
書簡は国際出願及び補正された請求の範囲とともに公開されることはない。これを「ＰＣＴ19条(1)に規定する説明書」と混同してはならない（「ＰＣＴ19条(1)に規定する説明書」については、以下を参照）。
書簡は、英語又は仏語を選択しなければならない。ただし、国際出願の言語が英語の場合、書簡は英語で、仏語の場合、書簡は仏語で記載しなければならない。
書簡には、出願時の請求の範囲と補正された請求の範囲との相違について表示しなければならない。特に、国際出願に記載した各請求の範囲との関連で次の表示（２以上の請求の範囲についての同一の表示する場合は、まとめることができる。）をしなければならない。

(i) この請求の範囲は変更しない。
(ii) この請求の範囲は削除する。
(iii) この請求の範囲は追加である。
(iv) この請求の範囲は出願時の１以上の請求の範囲と差し替える。
(v) この請求の範囲は出願時の請求の範囲の分割の結果である。

次に、添付する書簡中での、補正についての説明の例を示す。

１．［請求の範囲の一部の補正によって請求の範囲の項数が４８から５１になった場合］：
“請求の範囲１－２９、３１、３２、３４、３５、３７－４８項は、同じ番号のもとに補正された請求の範囲と置き換えられた。請求の範囲３０、３３及び３６項は変更なし。新たに請求の範囲４９－５１項が追加された。”

２．［請求の範囲の全部の補正によって請求の範囲の項数が１５から１１になった場合］：
“請求の範囲１－１５項は、補正された請求の範囲１－１１項に置き換えられた。”

３．［原請求の範囲の項数が１４で、補正が一部の請求の範囲の削除と新たな請求の範囲の追加を含む場合］：
“請求の範囲１－６及び１４項は変更なし。請求の範囲７－１３は削除。新たに請求の範囲１５、１６及び１７項を追加。”又は
“請求の範囲７－１３は削除。新たに請求の範囲１５、１６及び１７項を追加。その他の全ての請求の範囲は変更なし。”

４．［各種の補正がある場合］：
“請求の範囲１－１０項は変更なし。請求の範囲１１－１３、１８及び１９項は削除。請求の範囲１４、１５及び１６項は補正された請求の範囲１４項に置き換えられた。請求の範囲１７項は補正された請求の範囲１５、１６及び１７項に分割された。新たに請求の範囲２０及び２１項が追加された。”

“ＰＣＴ19条(1)の規定に基づく説明書”（ＰＣＴ規則46.4）

補正書には、補正並びにその補正が明細書及び図面に与える影響についての説明書を提出することができる（明細書及び図面はＰＣＴ19条(1)の規定に基づいては補正できない）。

説明書は、国際出願及び補正された請求の範囲とともに公開される。

説明書は、国際公開の言語で作成しなければならない。

説明書は、簡潔でなければならず、英語の場合又は英語に翻訳した場合に５００語を越えてはならない。

説明書は、出願時の請求の範囲と補正された請求の範囲との相違を示す書簡と混同してはならない。説明書を、その書簡に代えることはできない。説明書は別紙で提出しなければならず、見出しを付すものとし、その見出しは“ＰＣＴ19条(1)の規定に基づく説明書”の語句を用いることが望ましい。

説明書には、国際調査報告又は国際調査報告に列記された文献との関連性に関して、これらを誹謗する意見を記載してはならない。国際調査報告に列記された特定の請求の範囲に関連する文献についての言及は、当該請求の範囲の補正に関してのみ行うことができる。

国際予備審査の請求書が提出されている場合

ＰＣＴ19条の規定に基づく補正書及び添付する説明書の提出の時に国際予備審査の請求書が既に提出されている場合には、出願人は、補正書（及び説明書）を国際事務局に提出すると同時にその写し及び必要な場合、その翻訳文を国際予備審査機関にも提出することが望ましい（ＰＣＴ規則55.3(a)、62.2の第１文を参照）。詳細は国際予備審査請求書（ＰＣＴ／ＩＰＥＡ／４０１）の注意書参照。

国際予備審査の請求がされた場合は、見解書を作成した国際調査機関が国際予備審査機関としては行動しないという特定の場合を除いて、国際調査機関の見解書は国際予備審査機関の見解書とみなされる。この場合、様式ＰＣＴ／ＩＳＡ／２２０の送付日から３月又は優先日から２２月のうちいずれか遅く満了する期限が経過するまでに、出願人は国際予備審査機関に、適当な場合は補正書とともに、答弁書を提出することができる（ＰＣＴ規則43の2.1(c)）。

国内段階に移行するための国際出願の翻訳に関して

国内段階に移行する際、ＰＣＴ19条の規定に基づいて補正された請求の範囲の翻訳を出願時の請求の範囲の翻訳の代わりに又は追加して、指定官庁／選択官庁に提出しなければならないこともあるので、出願人は注意されたい。

指定官庁／選択官庁の詳細な要求については、ＰＣＴ出願人の手引きの第Ⅱ巻を参照。

特許協力条約

PCT

国際調査報告

(法8条、法施行規則第40、41条)
〔PCT18条、PCT規則43、44〕

09.12.15

出願人又は代理人の書類記号 P054561P0	今後の手続きについては、様式PCT／ISA／220及び下記5を参照すること。	
国際出願番号 PCT／JP2009／006215	国際出願日 (日.月.年) 19. 11. 2009	優先日 (日.月.年)
出願人（氏名又は名称） パナソニック株式会社		

国際調査機関が作成したこの国際調査報告を法施行規則第41条（PCT18条）の規定に従い出願人に送付する。
この写しは国際事務局にも送付される。

この国際調査報告は、全部で 3 ページである。

☐ この調査報告に引用された先行技術文献の写しも添付されている。

1．国際調査報告の基礎
a．言語に関し、この国際調査は以下のものに基づき行った。
☑ 出願時の言語による国際出願
☐ 出願時の言語から国際調査のための言語である ＿＿＿＿＿＿ 語に翻訳された、この国際出願の翻訳文（PCT規則12.3(a)及び23.1(b)）

b．☐ この国際調査報告は、PCT規則91の規定により国際調査機関が認めた又は国際調査機関に通知された明らかな誤りの訂正を考慮して作成した（PCT規則43.6の2(a)）。

c．☐ この国際出願は、ヌクレオチド又はアミノ酸配列を含んでいる（第Ⅰ欄参照）。

2．☐ 請求の範囲の一部の調査ができない（第Ⅱ欄参照）。

3．☐ 発明の単一性が欠如している（第Ⅲ欄参照）。

4．発明の名称は ☑ 出願人が提出したものを承認する。
☐ 次に示すように国際調査機関が作成した。

＿＿＿＿＿＿＿＿＿＿＿＿＿＿＿＿

5．要約は ☑ 出願人が提出したものを承認する。
☐ 第Ⅳ欄に示されているように、法施行規則第47条第1項（PCT規則38.2）の規定により国際調査機関が作成した。出願人は、この国際調査報告の発送の日から1月以内にこの国際調査機関に意見を提出することができる。

6．図面に関して
a．要約書とともに公表される図は、
第 2 図とする。 ☑ 出願人が示したとおりである。
☐ 出願人は図を示さなかったので、国際調査機関が選択した。
☐ 本図は発明の特徴を一層よく表しているので、国際調査機関が選択した。

b．☐ 要約とともに公表される図はない。

国際調査報告

国際出願番号　ＰＣＴ／ＪＰ２００９／００６２１５

Ａ．　発明の属する分野の分類（国際特許分類（ＩＰＣ））

Int.Cl.　G09G3/30(2006.01)i, G09G3/20(2006.01)i, H01L51/50(2006.01)i

Ｂ．　調査を行った分野

調査を行った最小限資料（国際特許分類（ＩＰＣ））

Int.Cl.　G09G3/30, G09G3/20, H01L51/50

最小限資料以外の資料で調査を行った分野に含まれるもの

日本国実用新案公報	１９２２－１９９６年
日本国公開実用新案公報	１９７１－２００９年
日本国実用新案登録公報	１９９６－２００９年
日本国登録実用新案公報	１９９４－２００９年

国際調査で使用した電子データベース（データベースの名称、調査に使用した用語）

Ｃ．　関連すると認められる文献

引用文献のカテゴリー＊	引用文献名　及び一部の箇所が関連するときは、その関連する箇所の表示	関連する請求項の番号
A	JP 2008-203657 A（ソニー株式会社）2008.09.04, 段落【００２３】－【００３６】, 図４－６ & US 2008/0198111 A1 & KR 10-2008-0077906 A & CN 101251975 A	1-18
A	JP 2009-204979 A（ソニー株式会社）2009.09.10, 段落【００４８】－【０１０８】, 図１８－３３（ファミリーなし）	1-18
A	JP 2008-032866 A（ソニー株式会社）2008.02.14, 全文全図（ファミリーなし）	1-18

☑ Ｃ欄の続きにも文献が列挙されている。　☐ パテントファミリーに関する別紙を参照。

＊　引用文献のカテゴリー
「Ａ」特に関連のある文献ではなく、一般的技術水準を示すもの
「Ｅ」国際出願日前の出願または特許であるが、国際出願日以後に公表されたもの
「Ｌ」優先権主張に疑義を提起する文献又は他の文献の発行日若しくは他の特別な理由を確立するために引用する文献（理由を付す）
「Ｏ」口頭による開示、使用、展示等に言及する文献
「Ｐ」国際出願日前で、かつ優先権の主張の基礎となる出願の日の後に公表された文献
「Ｔ」国際出願日又は優先日後に公表された文献であって出願と矛盾するものではなく、発明の原理又は理論の理解のために引用するもの
「Ｘ」特に関連のある文献であって、当該文献のみで発明の新規性又は進歩性がないと考えられるもの
「Ｙ」特に関連のある文献であって、当該文献と他の１以上の文献との、当業者にとって自明である組合せによって進歩性がないと考えられるもの
「&」同一パテントファミリー文献

国際調査を完了した日 ０３．１２．２００９	国際調査報告の発送日 １５．１２．２００９
国際調査機関の名称及びあて先 日本国特許庁（ＩＳＡ／ＪＰ） 郵便番号１００－８９１５ 東京都千代田区霞が関三丁目４番３号	特許庁審査官（権限のある職員）　２Ｇ　３８０５ 長井　真一 電話番号　０３－３５８１－１１０１　内線　３２２６

国際調査報告

国際出願番号　ＰＣＴ／ＪＰ２００９／００６２１５

Ｃ（続き）．　関連すると認められる文献

引用文献のカテゴリー＊	引用文献名　及び一部の箇所が関連するときは、その関連する箇所の表示	関連する請求項の番号
A	JP 2008-009198 A (ソニー株式会社) 2008.01.17, 全文全図 & US 2008/0001545 A1 & EP 1873747 A2 & CN 101097677 A & KR 10-2008-0003240 A	1-18

特許協力条約

発信人　日本国特許庁（国際調査機関）

代理人
新居広守
様

あて名
〒532-0011
日本国大阪府大阪市淀川区西中島５丁目３番１０号
タナカ・イトーピア新大阪ビル６階新居国際特許事務所内

PCT
国際調査機関の見解書
（法施行規則第40条の2）
［ＰＣＴ規則43の2.1］

発送日 （日.月.年）	１５．１２．２００９
出願人又は代理人 の書類記号　P054561P0	今後の手続きについては、下記２を参照すること。

国際出願番号	国際出願日	優先日
ＰＣＴ／ＪＰ２００９／００６２１５	（日.月.年）　１９．１１．２００９	（日.月.年）

国際特許分類（ＩＰＣ）Int.Cl. G09G3/30(2006.01)i, G09G3/20(2006.01)i, H01L51/50(2006.01)i

出願人（氏名又は名称）
パナソニック株式会社

１．この見解書は次の内容を含む。
- ☑ 第Ⅰ欄　見解の基礎
- ☐ 第Ⅱ欄　優先権
- ☐ 第Ⅲ欄　新規性、進歩性又は産業上の利用可能性についての見解の不作成
- ☐ 第Ⅳ欄　発明の単一性の欠如
- ☑ 第Ⅴ欄　ＰＣＴ規則43の2.1(a)(i)に規定する新規性、進歩性又は産業上の利用可能性についての見解、それを裏付けるための文献及び説明
- ☐ 第Ⅵ欄　ある種の引用文献
- ☐ 第Ⅶ欄　国際出願の不備
- ☐ 第Ⅷ欄　国際出願に対する意見

２．今後の手続き
国際予備審査の請求がされた場合は、出願人がこの国際調査機関とは異なる国際予備審査機関を選択し、かつ、その国際予備審査機関がＰＣＴ規則66.1の2(b)の規定に基づいて国際調査機関の見解書を国際予備審査機関の見解書とみなさない旨を国際事務局に通知していた場合を除いて、この見解書は国際予備審査機関の最初の見解書とみなされる。

この見解書が上記のように国際予備審査機関の見解書とみなされる場合、様式ＰＣＴ／ＩＳＡ／２２０を送付した日から３月又は優先日から２２月のうちいずれか遅く満了する期限が経過するまでに、出願人は国際予備審査機関に、適当な場合は補正書とともに、答弁書を提出することができる。

さらなる選択肢は、様式ＰＣＴ／ＩＳＡ／２２０を参照すること。

３．さらなる詳細は、様式ＰＣＴ／ＩＳＡ／２２０の備考を参照すること。

見解書を作成した日
０３．１２．２００９

名称及びあて先	特許庁審査官（権限のある職員）	2G	3805
日本国特許庁（ＩＳＡ／ＪＰ） 郵便番号１００－８９１５ 東京都千代田区霞が関三丁目４番３号	長井　真一 電話番号　０３－３５８１－１１０１　内線　３２２６		

国際調査機関の見解書

国際出願番号　ＰＣＴ／ＪＰ２００９／００６２１５

第Ｉ欄　見解の基礎

１．言語に関し、この見解書は以下のものに基づき作成した。

☑ 出願時の言語による国際出願

☐ 出願時の言語から国際調査のための言語である ＿＿＿＿＿＿ 語に翻訳された、この国際出願の翻訳文（ＰＣＴ規則12.3(a)及び23.1(b)）

２．☐ この見解書は、ＰＣＴ規則 91 の規定により国際調査機関が認めた又は国際調査機関に通知された明らかな誤りの訂正を考慮して作成した（ＰＣＴ規則 43 の 2.1(b)）。

３．この国際出願で開示されたヌクレオチド又はアミノ酸配列に関して、以下に基づき見解書を作成した。

ａ．タイプ　☐ 配列表

☐ 配列表に関連するテーブル

ｂ．フォーマット　☐ 紙形式

☐ 電子形式

ｃ．提出時期　☐ 出願時の国際出願に含まれていたもの

☐ この国際出願と共に電子形式により提出されたもの

☐ 出願後に、調査のために、この国際調査機関に提出されたもの

４．☐ さらに、配列表又は配列表に関連するテーブルを提出した場合に、出願後に提出した配列若しくは追加して提出した配列が出願時に提出した配列と同一である旨、又は、出願時の開示を超える事項を含まない旨の陳述書の提出があった。

５．補足意見：

国際調査機関の見解書

国際出願番号　ＰＣＴ／ＪＰ２００９／００６２１５

第Ｖ欄　新規性、進歩性又は産業上の利用可能性についてのＰＣＴ規則 43 の 2.1(a)(i)に定める見解、それを裏付ける文献及び説明

１．　見解

新規性（N）	請求項	1-18	有
	請求項		無
進歩性（ＩＳ）	請求項	1-18	有
	請求項		無
産業上の利用可能性（ＩＡ）	請求項	1-18	有
	請求項		無

２．　文献及び説明

文献１：JP 2008-203657 A（ソニー株式会社）2008.09.04，段落【００２３】－【００３６】，図４－６
文献２：JP 2009-204979 A（ソニー株式会社）2009.09.10，段落【００４８】－【０１０８】，図１８－３３
文献３：JP 2008-032866 A（ソニー株式会社）2008.02.14，全文全図
文献４：JP 2008-009198 A（ソニー株式会社）2008.01.17，全文全図

請求項１－１８に係る発明は、国際調査報告で引用された上記何れの文献にも開示されておらず、新規性及び進歩性を有する。

UNITED STATES PATENT AND TRADEMARK OFFICE

Commissioner for Patents
United States Patent and Trademark Office
P.O. Box 1450
Alexandria, VA 22313-1450
www.uspto.gov

GREENBLUM & BERNSTEIN, P.L.C.
1950 ROLAND CLARKE PLACE
RESTON VA 20191

MAILED
MAR 22 2012
OFFICE OF PETITIONS

In re Application of
Masafumi Matsui et al
Application No.: 13/035,170
Filed: February 25, 2011
Attorney Docket No.: P38259
For: DISPLAY PANEL DEVICE, DISPLAY DEVICE, AND CONTROL METHOD THEREOF

: DECISION ON REQUEST TO
: PARTICIPATE IN THE PATENT
: PROSECUTION HIGHWAY
: PROGRAM AND PETITION
: TO MAKE SPECIAL UNDER
: 37 CFR 1.102(a)

This is a decision on the request to participate in the PCT Patent Prosecution Highway (PCT-PPH) pilot program and the petition under 37 CFR 1.102(a), filed on December 14, 2011, to make the above-identified application special.

The request and petition are **DISMISSED**.

Discussion

A grantable request to participate in the PCT-PPH pilot program and petition to make special require:

(1) The U.S. application must have an eligible relationship to one or more PCT applications where the ISA or IPEA are the JPO, EPO, KIPO, IPAU, Russia, Spain, Finland, Austria, or USPTO;

(2) At least one claim in the PCT application has novelty, inventive step, and industrial applicability and must be free of any observations in Box VIII in the latest work product in the international stage or applicant must identify and explain why the claim(s) is/are not subject to the observation in Box VIII;

(3) Applicant must submit a copy of the claim(s) from the PCT application(s) that have novelty, inventive step, and industrial applicability along with an English translation thereof and a statement that the English translation is accurate, if the claims are not in the English language;

(4) All the claims in the U.S. application must sufficiently correspond or be amended to sufficiently correspond to the claim(s) that have novelty, inventive step, and industrial applicability in the PCT application(s);

(5) Examination of the U.S. application has not begun;

(6) Applicant must submit a copy of the latest international work product from the PCT application indicating that the claim(s) have novelty, inventive step, and industrial applicability along with an English translation thereof.

(7) Applicant must submit an IDS listing the documents cited by the PCT examiner in the international work product along with copies of documents except U.S. patents or U.S. patent application publications.

(8) Applicant is required to submit a claims correspondence table in English which indicates how all the claims in the U.S. application correspond to the claims indicated as having novelty, inventive step and industrial applicability in the latest international work product.

Requirements (1), (3-5), and (7-8) above are considered to have been met. However, the request to participate in the PPH pilot program and petition fail to meet requirements (6) and (2).

Regarding requirement (6), applicant has failed to provide a complete English translation of the Written Opinion (PCT/ISA/237).

Regarding requirement (2), it cannot be determined whether requirement (2) has been met since applicant has failed to provide a complete English translation of the Written Opinion (PCT/ISA/237).

Applicant is given **ONE** opportunity within a time period of **ONE MONTH or THIRTY DAYS**, whichever is longer, from the mailing date of this decision to correct the deficiencies. **NO EXTENSION OF TIME UNDER 37 CFR 1.136 IS PERMITTED.** If the deficiencies are not corrected with the time period given, the application will await action in its regular turn.

Response must be filed via the Electronic Filing System (EFS) using the document description: Petition to make special under PCT – Patent Pros Hwy. Any preliminary amendments and IDS submitted with the PPH documents must be separately indexed as a preliminary amendment and IDS, respectively.

Telephone inquiries concerning this decision should be directed to Irvin Dingle at 571-272-3210.

All other inquiries concerning the examination or status of the application is accessible in the PAIR system at http://www.uspto.gov/ebc/index.html.

David Bucci
Petitions Examiner
Office of Petition

P38259.A03

IN THE UNITED STATES PATENT AND TRADEMARK OFFICE

Applicants	: Masafumi MATSUI et al.	Art Unit	: 2629
Appl. No.	: 13/035,170 (U.S. National Stage of PCT/JP2009/006215)	Examiner	: Vijay Shankar
I.A. Filed	: November 19, 2009	Conf. No.	: 2278
For	: DISPLAY PANEL DEVICE, DISPLAY DEVICE, AND CONTROL METHOD THEREOF		

RESPONSE TO DECISION ON THE REQUEST TO PARTICIPATE IN THE PCT PATENT PROSECUTION HIGHWAY (PCT-PPH) PILOT PROGRAM AND THE PETITION TO MAKE SPECIAL UNDER 37 CFR 1.102(A)

Commissioner for Patents
U.S. Patent and Trademark Office
Customer Service Window, Mail Stop Petition
Randolph Building
401 Dulany Street
Alexandria VA 22314

Sir:

On March 22, 2012, the U.S. Patent and Trademark Office issued a Decision on Applicants' Request to Participate in the PCT Patent Prosecution Highway (PCT-PPH) Pilot Program and Petition to Make Special under 37 CFR 1.102(a) (hereinafter "Request and Petition"), which was filed on December 14, 2011. The Decision sets forth a one month period for response that expires on April 23, 2012 (April 22, 2012 being a Sunday).

The Decision indicates that the Request and Petition fail to meet requirement (6) since a complete English language translation of the Written Opinion (PCT/ISA/237) was not provided, and that it cannot be determined whether requirement (2) has been met since the complete English language translation was not provided. In response, Applicants submit herewith:

- a complete English language translation of the Written Opinion (PCT/ISA/237) in PCT/JP2009/006215.

Thus, Applicants submit that requirement (6) will be met upon entry of the present paper. Moreover, as shown in the complete English language translation, no observation on the international application is shown in Box VIII. Accordingly, it is further submitted that requirement (2) is met.

In view of the above, Applicants submit that all of the requirements for participating in the PCT-PPH Pilot Program have been met, and thus, respectfully request that the Examiner reconsider and grant Applicants' Request and Petition. Such action is respectfully requested and believed to be appropriate.

While no fee is believed to be due, should the Commissioner determine that any fee is required in order to render this paper timely and/or complete, the Commissioner is authorized to charge any fee to Deposit Account No. 19-0089.

If there should be any questions concerning this application, the Examiner is invited to contact the undersigned at the telephone number listed below.

Respectfully submitted,
Masafumi MATSUI et al.
/James P. Bonnamy/
Reg. No. 63,649
James P. Bonnamy

Bruce H. Bernstein
Reg. No. 29027

April 12, 2012
GREENBLUM & BERNSTEIN, P.L.C.
1950 Roland Clarke Place
Reston, VA 20191
(703) 716-1191

Encl: Decision on Request to Participate in the Patent Prosecution Highway Program and Petition to Make Special under 37 CFR 1.102(a) (copy)

Complete English Language Translation of Written Opinion in PCT/JP2009/006215

PTO/SB/20PCT-JP (05-10)
Approved for use through 01/31/2012. OMB 0651-0058
U.S. Patent and Trademark Office; U. S. DEPARTMENT OF COMMERCE
Under the Paperwork Reduction Act of 1995, no persons are required to respond to a collection of information unless it displays a valid OMB control number.

REQUEST FOR PARTICIPATION IN THE PATENT COOPERATION TREATY - PATENT PROSECUTION HIGHWAY (PCT-PPH) PILOT PROGRAM BETWEEN THE JAPAN PATENT OFFICE (JPO) AND THE USPTO

Application No:	13/035,175	Filing date:	February 25, 2011
First Named Inventor:	Masafumi Matsui		
Title of the Invention:	Display Panel Device, Display Device, and Control Method Thereof		

THIS REQUEST FOR PARTICIPATION IN THE PCT-PPH PILOT PROGRAM ALONG WITH THE REQUIRED DOCUMENTS MUST BE SUBMITTED VIA EFS-WEB. INFORMATION REGARDING EFS-WEB IS AVAILABLE AT HTTP://WWW.USPTO.GOV/EBC/EFS_HELP.HTML

APPLICANT HEREBY REQUESTS PARTICIPATION IN THE PCT-PPH PROGRAM AND PETITIONS TO MAKE THE ABOVE-IDENTIFIED APPLICATION SPECIAL UNDER THE PCT-PPH PROGRAM.

The above-identified application is (1) a national stage entry of the corresponding PCT application, or (2) a national stage entry of another PCT application which claims priority to the corresponding PCT application, or (3) a national application that claims domestic/ foreign priority to the corresponding PCT application, or (4) a national application which forms the basis for the priority claim in the corresponding PCT application, or (5) a continuing application of a U.S. application that satisfies one of (1) to (4) above, or (6) a U.S. application that claims domestic benefit to a U.S. provisional application which forms the basis for the priority claim in the corresponding PCT application.

The corresponding PCT application number(s) is/are: PCT/JP2009/006214

The international date of the corresponding PCT application(s) is/are: November 19, 2009

I. List of Required Documents:

a. **A copy of the latest international work product (WO/ISA, WO/IPEA, or IPER) in the above–identified corresponding PCT application(s)**

☑ Is attached.

☐ Is not attached because the document is already in the U.S. application.

b. **A copy of all claims which were indicated as having novelty, inventive step and industrial applicability in the above-identified corresponding PCT application(s).**

☑ Is attached.

☐ Is not attached because the document is already in the U.S. application.

c. **English translations of the documents in a. and b. above are attached (if the documents are not in the English language). A statement that the English translation is accurate is attached for the document in b. above.**

This collection of information is required by 35 U.S.C. 119, 37 CFR 1.55, and 37 CFR 1.102(d). The information is required to obtain or retain a benefit by the public, which is to file (and by the USPTO to process) an application. Confidentiality is governed by 35 U.S.C. 122 and 37 CFR 1.11 and 1.14. This collection is estimated to take 2 hours to complete, including gathering, preparing, and submitting the completed application form to the USPTO. Time will vary depending upon the individual case. Any comments on the amount of time you require to complete this form and/or suggestions for reducing this burden should be sent to the Chief Information Officer, U.S. Patent and Trademark Office, U.S. Department of Commerce, P.O. Box 1450, Alexandria, VA 22313-1450. DO NOT SEND FEES OR COMPLETED FORMS TO THIS ADDRESS.

Approved for use through 01/31/2012. OMB 0651-0058
U.S.Patent and Trademark Office; U.S. DEPARTMENT OF COMMERCE

Under the Paperwork Reduction Act of 1995, no persons are required to respond to a collection of information unless it displays a valid OMB control number.

REQUEST FOR PARTICIPATION IN THE PCT-PPH PILOT PROGRAM BETWEEN THE JPO AND THE USPTO

(continued)

Application No.:	13/035,175
First Named Inventor:	Masafumi Matsui

d. **(1) An information disclosure statement listing the documents cited in the international work products (ISR, WO/ISA, WO/IPEA, IPER) of the corresponding PCT application.**

☐ Is attached

☑ Has already been filed in the above-identified U.S. application on May 11, 2011

(2) Copies of all documents (except) for U.S. patents or U.S. patent application publications)

☐ Are attached.

☑ Have already been filed in the above-identified U.S. application on May 11, 2011

II. Claims Correspondence Table:

Claims in US Application	Patentable Claims in the corresponding PCT Application	Explanation regarding the correspondence
1	1	Each claim has been amended to improve clarity, grammar, and syntax.
2	2	The claims have also been amended to utilize proper claim format and to
3	3	eliminate language informalities.
4	4	
5	5	Additionally, the claims have been amended to eliminate potential
6	6	means-plus-function claim language and to eliminate multiple
7	7	dependencies.
8	8	
9	10	
10	9	
11	11	

III. All the claims in the US application sufficiently correspond to the patentable claims in the corresponding PCT application.

Signature		William Pieprz Reg. No. 33,630	Date 12/13/2011
Name (Print/Typed)	Bruce H. Bernstein		Registration Number 29027

Privacy Act Statement

The **Privacy Act of 1974 (P.L. 93-579)** requires that you be given certain information in connection with your submission of the attached form related to a patent application or patent. Accordingly, pursuant to the requirements of the Act, please be advised that: (1) the general authority for the collection of this information is 35 U.S.C. 2(b)(2); (2) furnishing of the information solicited is voluntary; and (3) the principal purpose for which the information is used by the U.S. Patent and Trademark Office is to process and/or examine your submission related to a patent application or patent. If you do not furnish the requested information, the U.S. Patent and Trademark Office may not be able to process and/or examine your submission, which may result in termination of proceedings or abandonment of the application or expiration of the patent.

The information provided by you in this form will be subject to the following routine uses:

1. The information on this form will be treated confidentially to the extent allowed under the Freedom of Information Act (5 U.S.C. 552) and the Privacy Act (5 U.S.C 552a). Records from this system of records may be disclosed to the Department of Justice to determine whether disclosure of these records is required by the Freedom of Information Act.
2. A record from this system of records may be disclosed, as a routine use, in the course of presenting evidence to a court, magistrate, or administrative tribunal, including disclosures to opposing counsel in the course of settlement negotiations.
3. A record in this system of records may be disclosed, as a routine use, to a Member of Congress submitting a request involving an individual, to whom the record pertains, when the individual has requested assistance from the Member with respect to the subject matter of the record.
4. A record in this system of records may be disclosed, as a routine use, to a contractor of the Agency having need for the information in order to perform a contract. Recipients of information shall be required to comply with the requirements of the Privacy Act of 1974, as amended, pursuant to 5 U.S.C. 552a(m).
5. A record related to an International Application filed under the Patent Cooperation Treaty in this system of records may be disclosed, as a routine use, to the International Bureau of the World Intellectual Property Organization, pursuant to the Patent Cooperation Treaty.
6. A record in this system of records may be disclosed, as a routine use, to another federal agency for purposes of National Security review (35 U.S.C. 181) and for review pursuant to the Atomic Energy Act (42 U.S.C. 218(c)).
7. A record from this system of records may be disclosed, as a routine use, to the Administrator, General Services, or his/her designee, during an inspection of records conducted by GSA as part of that agency's responsibility to recommend improvements in records management practices and programs, under authority of 44 U.S.C. 2904 and 2906. Such disclosure shall be made in accordance with the GSA regulations governing inspection of records for this purpose, and any other relevant (*i.e.*, GSA or Commerce) directive. Such disclosure shall not be used to make determinations about individuals.
8. A record from this system of records may be disclosed, as a routine use, to the public after either publication of the application pursuant to 35 U.S.C. 122(b) or issuance of a patent pursuant to 35 U.S.C. 151. Further, a record may be disclosed, subject to the limitations of 37 CFR 1.14, as a routine use, to the public if the record was filed in an application which became abandoned or in which the proceedings were terminated and which application is referenced by either a published application, an application open to public inspection or an issued patent.
9. A record from this system of records may be disclosed, as a routine use, to a Federal, State, or local law enforcement agency, if the USPTO becomes aware of a violation or potential violation of law or regulation.

P38258.A02

IN THE UNITED STATES PATENT AND TRADEMARK OFFICE

Applicants	: Masafumi MATSUI et al.	Art Unit	: 2629
Appl. No.	: 13/035,175 (Continuation of PCT/JP2009/006214)	Examiner	: Richard A. Hjerpe
I.A. Filed	: November 19, 2009	Conf. No.	: 2287
For	: DISPLAY PANEL DEVICE, DISPLAY DEVICE, AND CONTROL METHOD THEREOF		

STATEMENT IN SUPPORT OF REQUEST FOR PARTICIPATION IN THE PATENT COOPERATION TREATY - PATENT PROSECUTION HIGHWAY (PCT-PPH) PROGRAM BETWEEN THE JAPAN PATENT OFFICE AND THE USPTO

Commissioner for Patents
U.S. Patent and Trademark Office
Customer Service Window, Mail Stop PPH
Randolph Building
401 Dulany Street
Alexandria VA 22314

Sir:

In support of the concurrently filed Request for Participation in the PCT-PPH Program between the JPO and the USPTO, Applicants bring the following information to the attention of the U.S. Patent and Trademark Office:

1. The present application is a national application claiming foreign/domestic priority to PCT/JP2009/006214. That is, the present application is a continuation of PCT/JP2009/006214.

2. A copy of the latest international work product in PCT/JP2009/006214, and a partial English language translation thereof, are submitted concurrently with this Request. Applicants note that no observation is described in Box VIII.

3. A copy of the claims in PCT/JP2009/006214 having novelty, an inventive step, and industrial applicability, and a verified English language translation thereof, are submitted concurrently with this Request.

4. Copies of the documents cited in the latest international work product were submitted in an Information Disclosure Statement filed on May 11, 2011.

If there should be any questions concerning this application, the Examiner is invited to contact the undersigned at the telephone number listed below.

Respectfully submitted,
Masafumi MATSUI et al.

William Pieprz
Reg. No. 33,630

Bruce H. Bernstein
Reg. No. 29027

December 13, 2011
GREENBLUM & BERNSTEIN, P.L.C.
1950 Roland Clarke Place
Reston, VA 20191
(703) 716-1191

IN THE UNITED STATES PATENT AND TRADEMARK OFFICE

In re Application of

Serial NO.: 13/035,175
Filing Date: February 25, 2011
For: DISPLAY PANEL DEVICE, DISPLAY DEVICE, AND CONTROL METHOD THEREOF

VERIFICATION OF TRANSLATION

Honorable Commissioner of Patents and Trademarks
Washington, D.C. 20231

Sir:

Kazumi KAWATA, c/o NII Patent Firm, 6F, Tanaka Ito Pia Shin-Osaka Bldg., 3-10, Nishi Nakajima 5-chome, Yodogawa-ku, Osaka-city, Osaka 532-0011, Japan declares:

(1) that he knows well both the Japanese and English languages;
(2) that he translated the claims from PCT/JP2009/006214 from Japanese to English;
(3) that the attached English translation is a true and correct translation of the claims from PCT/JP2009/006214 to the best of his knowledge and belief; and
(4) that all statements made of his own knowledge are true and that all statements made on information and belief are believed to be true, and further that these statements are made with the knowledge that willful false statements and the like are punishable by fine or imprisonment, or both, under 18 U.S.C. 1001, and that such false statements may jeopardize the validity of the application or any patent thereon.

This 6th day of December, 2011

Kazumi KAWATA

[CLAIMS]

[Claim 1]

A display panel device, comprising:

a luminescence element including a first luminescence electrode and a second luminescence electrode;

a first capacitor including a first capacitor electrode and a second capacitor electrode that holds a capacitor voltage;

a driver including a gate electrode, a drain electrode, and a source electrode that drives the luminescence element to produce a luminescence by allowing a drain current corresponding to the capacitor voltage to flow through the luminescence element, the gate electrode being connected to the first capacitor electrode, the source electrode being connected to the first luminescence electrode and the second capacitor electrode;

a first power line that determines a potential of the drain electrode of the driver;

a second power line electrically connected to the second luminescence electrode;

a data line that supplies a signal voltage to the first capacitor;

a first switch switchably interconnecting the data line and the first capacitor electrode;

a second switch switchably interconnecting the first power line and the drain electrode of the driver; and

a controller that controls the first switch and the second switch, wherein the controller is configured to:

turn ON the second switch to interconnect the first power line and the drain electrode of the driver, and, when the second switch is in an ON state, turn ON the first switch to interconnect the data line and the first capacitor electrode to supply the signal voltage to the first capacitor and flow a current between the source electrode of the driver and the second capacitor electrode; and

turn OFF the second switch after an elapse of a predetermined time period after the signal voltage is supplied to the first capacitor to cause non-conduction between the first power line and the drain electrode of the driver to stop the flow of the current

between the source electrode of the driver and the second capacitor electrode,

whereby a charge accumulated in the first capacitor is discharged when the current flows between the source electrode of the driver and the second capacitor electrode during the predetermined time period.

[Claim 2]

The display panel device according to Claim 1, further comprising:

a second capacitor connected to the second capacitor electrode; and

a bias voltage line that supplies, to the second capacitor, a reverse bias voltage which generates, in the first capacitor, a capacitor potential difference that is greater than a driver threshold voltage of the driver,

wherein the controller is further configured to:

turn ON the second switch to interconnect the first power line and the drain electrode of the driver, and turn ON the first switch to supply the reverse bias voltage to the second capacitor while a fixed voltage for fixing a voltage of the first capacitor electrode is supplied from the data line, the reverse bias voltage generating, in the first capacitor, the capacitor potential difference that is greater than the driver threshold voltage; and

turn ON the first switch while the driver is in an OFF state and the second switch is in the ON state to supply the signal voltage to the first capacitor electrode after the capacitor potential difference reaches the driver threshold voltage and the driver is in the OFF state.

[Claim 3]

The display panel device according to Claim 2,

wherein the controller is further configured to:

turn ON the first switch to supply the reverse bias voltage to the second capacitor while the fixed voltage for fixing the voltage of the first capacitor electrode is supplied from the data line, the reverse

bias voltage generating, in the first capacitor, the capacitor potential difference that is greater than the driver threshold voltage;

turn OFF the first switch; and

turn ON the first switch while the driver is in the OFF state and the second switch is in the ON state to supply the signal voltage to the first capacitor electrode after the capacitor potential difference reaches the driver threshold voltage and the driver is in the OFF state.

[Claim 4]

The display panel device according to Claim 2,

wherein the fixed voltage is set such that, after the capacitor potential difference reaches the driver threshold voltage and the driver is in the OFF state, a luminescence potential difference between the first luminescence electrode and the second luminescence electrode becomes lower than a luminescence threshold voltage of the luminescence element at which the luminescence element produces the luminescence.

[Claim 5]

The display panel device according to Claim 1, further comprising:

a third power line for supplying, to the second capacitor electrode, a reference voltage which generates, in the first capacitor, a capacitor potential difference that is greater than a driver threshold voltage of the driver; and

a third switch switchably interconnecting the second capacitor electrode and the third power line,

wherein the controller is further configured to:

turn ON the third switch to interconnect the second capacitor electrode and the third power line to supply the reference voltage to the second capacitor electrode;

turn ON the first switch to supply a fixed voltage for fixing a voltage of the first capacitor electrode from the data line, and

turn ON the first switch while the second switch is in the

ON state and the driver is in an OFF state to supply the signal voltage to the first capacitor electrode after the capacitor potential difference reaches the driver threshold voltage and the driver is in the OFF state.

[Claim 6]

The display panel device according to Claim 5,

wherein the third power line is a scanning line, and the scanning line is configured to turn ON and turn OFF the first switch, and

the scanning line supplies the reference voltage to turn OFF the first switch.

[Claim 7]

The display panel device according to any one of Claims 1 to 6,

wherein a first time constant for turning ON and turning OFF the first switch is at least equal to a second time constant for turning ON and turning OFF the second switch.

[Claim 8]

A display device, comprising:

the display panel device according to any one of Claims 1 to 7; and

a power source that supplies power to the first power line and the second power line,

wherein the luminescence element further includes a luminescent layer sandwiched between the first luminescence electrode and the second luminescence electrode, and

a plurality of luminescence elements including the luminescence element is arranged in a matrix pattern.

[Claim 9]

A display device, comprising:

the display panel device according to any one of Claims 1 to 7; and

a power source that supplies power to the first power line and the second power line,

wherein the luminescence element further includes a luminescent layer sandwiched between the first luminescence electrode and the second luminescence electrode,

a pixel includes the luminescence element, the first capacitor, the driver, the first switch, and the second switch, and

a plurality of pixels including the pixel are arranged in a matrix pattern.

[Claim 10]

The display device according to Claim 8 or Claim 9,

wherein the luminescence element is an organic electroluminescence element.

[Claim 11]

A method of controlling a display device,

wherein the display device includes:

a luminescence element having a first luminescence electrode and a second luminescence electrode;

a first capacitor having a first capacitor electrode and a second capacitor electrode that holds a capacitor voltage;

a driver having a gate electrode, a drain electrode, and a source electrode that drives the luminescence element to produce a luminescence by allowing a drain current corresponding to the capacitor voltage to flow through the luminescence element, the gate electrode being connected to the first capacitor electrode, the source electrode being connected to the first luminescence electrode and the second capacitor electrode;

a first power line that determines a potential of the drain electrode of the driver;

a second power line electrically connected to the second luminescence electrode;

a data line that supplies a signal voltage to the first capacitor;

a first switch switchably interconnecting the data line and the first capacitor electrode; and

a second switch switchably interconnecting the first power line and the drain electrode of the driver,

the method comprising:

turning ON the second switch to interconnect the first power line and the drain electrode of the driver, and, when the second switch is in an ON state, turning ON the first switch to interconnect the data line and the first capacitor electrode to supply the signal voltage to the first capacitor and flow a current between the source electrode of the driver and the second capacitor electrode; and

turning OFF the second switch after an elapse of a predetermined time period after the signal voltage is supplied to the first capacitor to cause non-conduction between the first power line and the drain electrode of the driver to stop the flow of the current between the source electrode of the driver and the second capacitor electrode,

whereby a charge accumulated in the first capacitor is discharged when the current flows between the source electrode of the driver and the second capacitor electrode during the predetermined time period.

請求の範囲

[請求項1]　第１電極と第２電極とを有する発光素子と、

電圧を保持するための第１コンデンサと、

ゲート電極が前記第１コンデンサの第１電極に接続され、ソース電極が前記発光素子の第１電極及び前記第１コンデンサの第２電極に接続され、前記第１コンデンサに保持された電圧に応じたドレイン電流を前記発光素子に流すことにより前記発光素子を発光させる駆動素子と、

前記駆動素子のドレイン電極の電位を決定するための第１電源線と、

前記発光素子の第２電極に電気的に接続された第２電源線と、

信号電圧を供給するためのデータ線と、

一方の端子が前記データ線に接続され、他方の端子が前記第１コンデンサの第１電極に接続され、前記データ線と前記第１コンデンサの第１電極との導通及び非導通を切り換える第１スイッチング素子と、

一方の端子が前記第１電源線に接続され、他方の端子が前記駆動素子のドレイン電極に接続され、前記第１電源線と前記駆動素子のドレイン電極との導通及び非導通を切り換える第２スイッチング素子と、

前記第１スイッチング素子及び第２スイッチング素子を制御する駆動回路と、を具備し、

前記駆動回路は、

前記第２スイッチング素子をオン状態にして前記第１電源線と前記駆動素子のドレイン電極とが導通した状態で、前記第１スイッチング素子をオン状態にして前記第１コンデンサの第１電極に前記信号電圧を供給し、前記駆動素子のソース電極と前記第１コンデンサの第２電極との間に電流を流させ、

前記第１コンデンサの第１電極に前記信号電圧が供給されてから予め定められた期間の経過後に、前記第２スイッチング素子をオフ状態

にして前記第１電源線と前記駆動素子のドレイン電極とを非導通として前記駆動素子のソース電極と前記第１コンデンサの第２電極との間を流れる電流を停止させることにより、

前記期間内に前記駆動素子のソース電極と前記第１コンデンサの第２電極との間を流れる電流により前記第１コンデンサに蓄積された電荷を放電させる、

表示パネル装置。

[請求項2]　さらに、

前記第１コンデンサの第２電極に接続された第２コンデンサと、

前記駆動素子の閾値電圧より大きな電位差を前記第１コンデンサに生じさせる逆バイアス電圧を前記第２コンデンサに供給するバイアス電圧線とを備え、

前記駆動回路は、

前記第２スイッチング素子をオン状態にして前記第１電源線と前記駆動素子のドレイン電極とを導通させ、

前記第１スイッチング素子をオン状態にして前記第１コンデンサの第１電極の電圧を固定するための固定電圧を前記データ線から供給させつつ、前記駆動素子の閾値電圧より大きな電位差を前記第１コンデンサに生じさせるような前記逆バイアス電圧を前記第２コンデンサに書込み、

前記第１コンデンサの第１電極及び第２電極の電位差が前記駆動素子の閾値電圧に到達して前記駆動素子がオフ状態となるまでの時間が経過した後、前記駆動素子がオフ状態の間に、前記第２スイッチング素子がオン状態のまま、

前記第１スイッチング素子をオン状態にして前記第１コンデンサの第１電極に前記信号電圧の供給を開始する、

請求項１に記載の表示パネル装置。

[請求項3]　前記駆動回路は、

前記第１スイッチング素子をオン状態にして前記第１コンデンサの第１電極の電圧を固定するための固定電圧を前記データ線から供給させつつ、前記駆動素子の閾値電圧より大きな電位差を前記第１コンデンサに生じさせるような前記逆バイアス電圧を前記第２コンデンサに書込み、

前記第１スイッチング素子をオフ状態にし、

前記第１コンデンサの第１電極及び第２電極の電位差が前記駆動素子の閾値電圧に到達して前記駆動素子がオフ状態となるまでの時間が経過した後、前記駆動素子がオフ状態の間に、前記第２スイッチング素子がオン状態のまま、

前記第１スイッチング素子をオン状態にして前記第１コンデンサの第１電極に前記信号電圧の供給を開始する、

請求項２に記載の表示パネル装置。

[請求項4]　前記固定電圧の電圧値は、

前記第１コンデンサの第１電極及び第２電極の電位差が前記駆動素子の閾値電圧に到達して前記駆動素子がオフ状態となるまでの時間が経過した際に、前記発光素子の第１電極と前記発光素子の第２電極との電位差が、前記発光素子が発光を開始する前記発光素子の閾値電圧より低い電圧となるように予め設定されている、

請求項２に記載の表示パネル装置。

[請求項5]　さらに、

前記第１コンデンサに前記駆動素子の閾値電圧より大きな電位差を生じさせる基準電圧を、前記第１コンデンサの第２電極に供給する第３電源線と、

前記第１コンデンサの第２電極と前記第３電源線とを接続するための第３スイッチング素子とを備え、

前記駆動回路は、

前記第３スイッチング素子をオン状態にして前記第１コンデンサの

第２電極に前記基準電圧を供給し、

前記第１スイッチング素子をオン状態にして前記第１コンデンサの第１電極の電圧を固定するための固定電圧を前記データ線から供給させ、

前記第１コンデンサの第１電極及び第２電極の電位差が前記駆動素子の閾値電圧に到達して前記駆動素子がオフ状態となるまでの時間が経過した後、前記第２スイッチング素子がオン状態のまま、前記駆動素子がオフ状態の間に、前記第１スイッチング素子をオン状態にして前記第１コンデンサの第１電極に前記信号電圧の供給を開始する、

請求項１に記載の表示パネル装置。

[請求項6]　前記第３電源線は、前記第１スイッチング素子のオンオフ状態を切り換えるための走査線と共用されており、

前記基準電圧は、前記第１スイッチング素子をオフ状態にするときの前記走査線の電圧である、

請求項５に記載の表示パネル装置。

[請求項7]　前記第１スイッチング素子のオンオフを切り換えるための第１の時定数は、前記第２スイッチング素子のオンオフを切り換えるための第２の時定数以上である、

請求項１～６のうちいずれか１項に記載の表示パネル装置。

[請求項8]　請求項１～７のうちいずれか１項に記載の表示パネル装置と、

前記第１及び第２電源線に電源を供給する電源と、を備え、

前記発光素子は、第１電極と、第２電極と、前記第１電極及び前記第２電極に挟まれた発光層とを含み、

前記発光素子は、少なくとも複数個マトリクス状に配置されている、

表示装置。

[請求項9]　請求項１～７のうちいずれか１項に記載の表示パネル装置と、

前記第１及び第２電源線に電源を供給する電源と、を備え、

前記発光素子は、第１電極と、第２電極と、前記第１電極及び前記第２電極に挟まれた発光層とを含み、

前記発光素子、前記第１コンデンサ、前記駆動素子、前記第１スイッチング素子、及び前記第２スイッチング素子は単位画素の画素回路を構成し、

前記画素回路は、複数個マトリクス状に配置されている、

表示装置。

[請求項10]　前記発光素子は、有機エレクトロルミネッセンス発光素子である、

請求項８または９に記載の表示装置。

[請求項11]　第１電極と第２電極とを有する発光素子と、

電圧を保持するための第１コンデンサと、

ゲート電極が前記第１コンデンサの第１電極に接続され、ソース電極が前記発光素子の第１電極及び前記第１コンデンサの第２電極に接続され、前記第１コンデンサに保持された電圧に応じたドレイン電流を前記発光素子に流すことにより前記発光素子を発光させる駆動素子と、

前記駆動素子のドレイン電極の電位を決定するための第１電源線と、

前記発光素子の第２電極に接続された第２電源線と、

信号電圧を供給するためのデータ線と、

一方の端子が前記データ線に接続され、他方の端子が前記第１コンデンサの第１電極に接続され、前記データ線と前記第１コンデンサの第１電極との導通及び非導通を切り換える第１スイッチング素子と、

一方の端子が前記第１電源線に接続され、他方の端子が前記駆動素子のドレイン電極に接続され、前記第１電源線と前記駆動素子のドレイン電極との導通及び非導通を切り換える第２スイッチング素子とを具備した表示装置の制御方法であって、

前記第２スイッチング素子をオン状態にして前記第１電源線と前記

駆動素子のドレイン電極とが導通した状態で、前記第１スイッチング素子をオン状態にして前記第１コンデンサの第１電極に前記信号電圧を供給し、前記駆動素子のソース電極と前記第１コンデンサの第２電極との間に電流を流させ、

前記第１コンデンサの第１電極に前記信号電圧が供給されてから予め定められた期間の経過後に、前記第２スイッチング素子をオフ状態にして前記第１電源線と前記駆動素子のドレイン電極とを非導通として前記駆動素子のソース電極と前記第１コンデンサの第２電極との間を流れる電流を停止させることにより、前記期間内に前記駆動素子のソース電極と前記第１コンデンサの第２電極との間を流れる電流により前記第１コンデンサに蓄積された電荷を放電させる、

表示装置の制御方法。

WRITTEN OPINION OF THE
INTERNATIONAL SEARCHING AUTHORITY

International application No.
PCT/JP2009/006214

Box No. V Reasoned statement under Rule 43*bis*. 2.1(a)(i) with regard to novelty, inventive step and industrial applicability; citations and explanations supporting such statement

1. Statement

Novelty (N)	Claims	1 - 11	Yes
	Claims		No
Inventive step (IS)	Claims	1 - 11	Yes
	Claims		No
Industrial applicability (IA)	Claims	1 - 11	Yes
	Claims		No

2. Citations and explanations

Document 1: JP2008-203657 A (Sony Corporation), September 4, 2008, paragraphs [0056] - [0068], Figs. 10 - 12

Document 2: JP2009-204979 A (Sony Corporation), September 10, 2009, paragraphs [0139] - [0163], Figs. 47 - 59

Document 3: JP2006-215213 A (Sony Corporation), August 17, 2006, paragraphs [0035] - [0059], Figs. 5 - 11

The invention as claimed in Claims 1 to 11 is not disclosed in any of the documents cited in the International Search Report, and thus has novelty and an inventive step.

Form PCT/ISA/237 (Box No. V) (April 2007)

特許協力条約

発信人　日本国特許庁（国際調査機関）

代理人
新居広守
様

あて名
〒532-0011
日本国大阪府大阪市淀川区西中島５丁目３番１０号タナカ・イトーピア新大阪ビル６階新居国際特許事務所内

'09.12.16

ＰＣＴ

国際調査報告及び国際調査機関の見解書
又は国際調査報告を作成しない旨の決定
の送付の通知書
（法施行規則第41条）
〔ＰＣＴ規則44.1〕

発送日 （日.月.年）　１５．１２．２００９	
出願人又は代理人 の書類記号　P054560P0	今後の手続きについては、下記１及び４を参照。
国際出願番号 ＰＣＴ／ＪＰ２００９／００６２１４	国際出願日 （日.月.年）　１９．１１．２００９
出願人（氏名又は名称） パナソニック株式会社	

1．☑ 国際調査報告及び国際調査機関の見解書が作成されたこと、及びこの送付書とともに送付することを、出願人に通知する。
ＰＣＴ19条の規定に基づく補正書及び説明書の提出
出願人は、国際出願の請求の範囲を補正することができる（ＰＣＴ規則46参照）。
いつ　補正書の提出期間は、通常国際調査報告の送付の日から２月である。
どこへ　直接次の場所へ　The International Bureau of WIPO
34, chemin des Colombettes
1211 Geneva 20, Switzerland
Facsimile No.: +41 22 338 82 70
詳細な手続については、添付用紙の備考を参照すること。

2．☐ 国際調査報告が作成されないこと、及び法第8条第2項（ＰＣＴ17条(2)(a)）の規定による国際調査報告を作成しない旨の決定及び国際調査機関の見解書をこの送付書とともに送付することを、出願人に通知する。

3．☐ 法施行規則第44条（ＰＣＴ規則40.2）に規定する追加手数料の納付に対する異議の申立てに関して、出願人に下記の点を通知する。
☐ 異議の申立てと当該異議についての決定を、その異議の申し立てと当該異議についての決定の両方を指定官庁へ送付することを求める出願人の請求とともに、国際事務局へ送付した。
☐ 当該異議についての決定は、まだ行われていない。決定されしだい出願人に通知する。

4．今後の手続：　出願人は次の点に注意すること。
優先日から１８月経過後、国際出願は国際事務局によりすみやかに国際公開される。出願人が公開の延期を望むときは、国際出願又は優先権の主張の取下げの通知がＰＣＴ規則90の2.1及び90の2.3にそれぞれ規定されているように、国際公開の事務的な準備が完了する前に国際事務局に到達しなければならない。
いくつかの指定官庁については、出願人が国内段階の開始を優先日から３０月まで（官庁によってはさらに遅くまで）延期することを望むときは、優先日から１９月以内に、国際予備審査の請求書が提出されなければならない。そうでなければ、出願人はそれらの指定官庁に対して優先日から２０月以内に、国内段階の開始のための所定の手続を取らなければならない。
その他の指定官庁については、１９月以内に国際予備審査の請求書が提出されない場合にも、３０月の（あるいはさらに遅い）期限が適用される。
様式PCT/IB/301の付属書類を参照。個々の指定官庁で適用される期限の詳細については、ＰＣＴ出願人の手引、第Ⅱ巻、国内段階およびＷＩＰＯインターネットサイトを参照。

名称及びあて名 日本国特許庁（ＩＳＡ／ＪＰ） 郵便番号１００－８９１５ 東京都千代田区霞が関三丁目４番３号	権限のある職員 特　許　庁　長　官 電話番号　０３－３５８１－１１０１　内線　３２２６	２Ｇ	３８０５

注　　意

1．国際調査報告の発送日から起算する条約第19条（1）及び規則46.1に従う国際事務局への補正期間に注意してください。

2．条約22条（2）に規定する期間に注意してください。

3．法律又は契約等の制限により、国際調査報告に記載した非特許文献の写しの一部又は全てが送付されない場合があります。

4．文献の写しの請求について

国際調査報告に記載した文献の複写

特許庁にこれらの引用文献の写しを請求することもできますが、独立行政法人工業所有権情報・研修館（特許庁庁舎２階）で公報類の閲覧・複写および公報以外の文献複写等の取り扱いをしています。

〔担当及び照会先〕

〒１００－００１３　東京都千代田区霞が関３丁目４番３号（特許庁庁舎２階）
独立行政法人工業所有権情報・研修館
【公 報 類】　閲覧部　ＴＥＬ　03－3581－1101　内線3811～2
【公報以外】　資料部　ＴＥＬ　03－3581－1101　内線3831～3

また、（財）日本特許情報機構でも取り扱いをしています。
これらの引用文献の複写を請求する場合は下記の点に注意してください。

〔申込方法〕

（１）特許（実用新案・意匠）公報については、下記の点を明記してください。
○特許・実用新案及び意匠の種類
○出願公告又は出願公開の年次及び番号（又は特許番号、登録番号）
○必要部数

（２）公報以外の文献の場合は、下記の点に注意してください。
○国際調査報告の写しを添付してください（返却します）。

〔申込み及び照会先〕

〒１３５－００１６　東京都江東区東陽４－１－７　佐藤ダイヤビルディング
財団法人　日本特許情報機構　情報業務部業務課
ＴＥＬ　０３－３５０８－２３１３

注意　特許庁に対して文献の写しの請求をすることができる期間は、国際出願日から７年です。

様式ＰＣＴ／ＩＳＡ／２２０の備考

この備考は、ＰＣＴ19条の規定に基づく補正書の提出に関する基本的な指示を与えるためのものである。この備考は特許協力条約並びにこの条約に基づく規則及び実施細則の規定に基づいている。この備考とそれらの規定とが相違する場合には、後者が適用される。詳細な情報については、ＷＩＰＯの出版物であるＰＣＴ出願人の手引も参照すること。

ＰＣＴ19条の規定に基づく補正書の提出に関する指示

出願人は、国際調査報告及び国際調査機関の見解書を受領した後、国際出願の請求の範囲を補正する機会が一回ある。しかし、国際出願のすべての部分（請求の範囲、明細書及び図面）が、国際予備審査の手続においても補正できるもので、例えば出願人が仮保護のために補正書を公開することを希望する場合又は国際公開前に請求の範囲を補正する別の理由がある場合を除き、通常ＰＣＴ19条の規定に基づく補正書を提出する必要はないことを強調しておく。さらに、仮保護は一部の国のみで与えられるだけであることも強調しておく（ＰＣＴ出願人の手引、附録Ｂ１及びＢ２参照）。

補正の対象となるもの

ＰＣＴ19条の規定により請求の範囲のみ補正することができる。
国際段階においてＰＣＴ34条の規定に基づく国際予備審査の手続きにおいて請求の範囲を（更に）補正することができる。
明細書及び図面は、ＰＣＴ34条の規定に基づく国際予備審査の手続においてのみ補正することができる。
国内段階に移行する際、ＰＣＴ28条（又はＰＣＴ41条）の規定により、国際出願のすべての部分を補正することができる。

いつ

国際調査報告の送付の日から２月又は優先日から１６月の内どちらか遅く満了するほうの期間内。しかし、その期間の満了後であっても国際公開の技術的な準備の完了前に国際事務局が補正を受領した場合には、その補正書は、期間内に受理されたものとみなすことを強調しておく（ＰＣＴ規則46.1）。

補正書を提出すべきところ

補正書は、国際事務局のみに提出でき、受理官庁又は国際調査機関には提出してはいけない（ＰＣＴ規則46.2）。
国際予備審査の請求書を提出した／する場合については、以下を参照すること。

どのように

１以上の請求の範囲の削除、１以上の新たな請求の範囲の追加、又は１以上の請求の範囲の記載の補正による。
差替え用紙は、補正の結果、出願当初の用紙と相違する請求の範囲の各用紙毎に提出する。
差替え用紙に記載されているすべての請求の範囲には、アラビア数字を付さなければならない。請求の範囲を削除する場合、その他の請求の範囲の番号を付け直す必要はない。請求の範囲の番号を付け直す場合には、連続番号で付け直さなければならない（ＰＣＴ実施細則第205号(b)）。
補正は国際公開の言語で行う。

補正書にどのような書類を添付しなければならないか

書簡（ＰＣＴ実施細則第205号(b)）

補正書には書簡を添付しなければならない。
書簡は国際出願及び補正された請求の範囲とともに公開されることはない。これを「ＰＣＴ19条(1)に規定する説明書」と混同してはならない（「ＰＣＴ19条(1)に規定する説明書」については、以下を参照）。
書簡は、英語又は仏語を選択しなければならない。ただし、国際出願の言語が英語の場合、書簡は英語で、仏語の場合、書簡は仏語で記載しなければならない。
書簡には、出願時の請求の範囲と補正された請求の範囲との相違について表示しなければならない。特に、国際出願に記載した各請求の範囲との関連で次の表示（２以上の請求の範囲についての同一の表示する場合は、まとめることができる。）をしなければならない。

(i) この請求の範囲は変更しない。
(ii) この請求の範囲は削除する。
(iii) この請求の範囲は追加である。
(iv) この請求の範囲は出願時の１以上の請求の範囲と差し替える。
(v) この請求の範囲は出願時の請求の範囲の分割の結果である。

次に、添付する書簡中での、補正についての説明の例を示す。

１．［請求の範囲の一部の補正によって請求の範囲の項数が４８から５１になった場合］：
“請求の範囲１－２９、３１、３２、３４、３５、３７－４８項は、同じ番号のもとに補正された請求の範囲と置き換えられた。請求の範囲３０、３３及び３６項は変更なし。新たに請求の範囲４９－５１項が追加された。”

２．［請求の範囲の全部の補正によって請求の範囲の項数が１５から１１になった場合］：
“請求の範囲１－１５項は、補正された請求の範囲１－１１項に置き換えられた。”

３．［原請求の範囲の項数が１４で、補正が一部の請求の範囲の削除と新たな請求の範囲の追加を含む場合］：
“請求の範囲１－６及び１４項は変更なし。請求の範囲７－１３は削除。新たに請求の範囲１５、１６及び１７項を追加。”又は
“請求の範囲７－１３は削除。新たに請求の範囲１５、１６及び１７項を追加。その他の全ての請求の範囲は変更なし。”

４．［各種の補正がある場合］：
“請求の範囲１－１０項は変更なし。請求の範囲１１－１３、１８及び１９項は削除。請求の範囲１４、１５及び１６項は補正された請求の範囲１４項に置き換えられた。請求の範囲１７項は補正された請求の範囲１５、１６及び１７項に分割された。新たに請求の範囲２０及び２１項が追加された。”

“ＰＣＴ19条(1)の規定に基づく説明書”（ＰＣＴ規則46.4）

補正書には、補正並びにその補正が明細書及び図面に与える影響についての説明書を提出することができる（明細書及び図面はＰＣＴ19条(1)の規定に基づいては補正できない）。

説明書は、国際出願及び補正された請求の範囲とともに公開される。

説明書は、国際公開の言語で作成しなければならない。

説明書は、簡潔でなければならず、英語の場合又は英語に翻訳した場合に５００語を越えてはならない。

説明書は、出願時の請求の範囲と補正された請求の範囲との相違を示す書簡と混同してはならない。説明書を、その書簡に代えることはできない。説明書は別紙で提出しなければならず、見出しを付すものとし、その見出しは“ＰＣＴ19条(1)の規定に基づく説明書”の語句を用いることが望ましい。

説明書には、国際調査報告又は国際調査報告に列記された文献との関連性に関して、これらを誹謗する意見を記載してはならない。国際調査報告に列記された特定の請求の範囲に関連する文献についての言及は、当該請求の範囲の補正に関してのみ行うことができる。

国際予備審査の請求書が提出されている場合

ＰＣＴ19条の規定に基づく補正書及び添付する説明書の提出の時に国際予備審査の請求書が既に提出されている場合には、出願人は、補正書（及び説明書）を国際事務局に提出すると同時にその写し及び必要な場合、その翻訳文を国際予備審査機関にも提出することが望ましい（ＰＣＴ規則55.3(a)、62.2の第１文を参照）。詳細は国際予備審査請求書（ＰＣＴ／ＩＰＥＡ／４０１）の注意書参照。

国際予備審査の請求がされた場合は、見解書を作成した国際調査機関が国際予備審査機関としては行動しないという特定の場合を除いて、国際調査機関の見解書は国際予備審査機関の見解書とみなされる。この場合、様式ＰＣＴ／ＩＳＡ／２２０の送付日から３月又は優先日から２２月のうちいずれか遅く満了する期限が経過するまでに、出願人は国際予備審査機関に、適当な場合は補正書とともに、答弁書を提出することができる（ＰＣＴ規則43の2.1(c)）。

国内段階に移行するための国際出願の翻訳に関して

国内段階に移行する際、ＰＣＴ19条の規定に基づいて補正された請求の範囲の翻訳を出願時の請求の範囲の翻訳の代わりに又は追加して、指定官庁／選択官庁に提出しなければならないこともあるので、出願人は注意されたい。

指定官庁／選択官庁の詳細な要求については、ＰＣＴ出願人の手引きの第Ⅱ巻を参照。

特許協力条約

PCT

国際調査報告

（法８条、法施行規則第40、41条）
〔ＰＣＴ18条、ＰＣＴ規則43、44〕

出願人又は代理人の書類記号 P054560P0	今後の手続きについては、様式ＰＣＴ／ＩＳＡ／２２０及び下記５を参照すること。	
国際出願番号 ＰＣＴ／ＪＰ２００９／００６２１４	国際出願日 (日.月.年) １９．１１．２００９	優先日 (日.月.年)
出願人（氏名又は名称） パナソニック株式会社		

国際調査機関が作成したこの国際調査報告を法施行規則第41条（ＰＣＴ18条）の規定に従い出願人に送付する。
この写しは国際事務局にも送付される。

この国際調査報告は、全部で ３ ページである。

☐ この調査報告に引用された先行技術文献の写しも添付されている。

１．国際調査報告の基礎
ａ．言語に関し、この国際調査は以下のものに基づき行った。
☑ 出願時の言語による国際出願
☐ 出願時の言語から国際調査のための言語である ＿＿＿＿＿＿ 語に翻訳された、この国際出願の翻訳文（ＰＣＴ規則12.3(a)及び23.1(b)）

ｂ．☐ この国際調査報告は、ＰＣＴ規則91の規定により国際調査機関が認めた又は国際調査機関に通知された明らかな誤りの訂正を考慮して作成した（ＰＣＴ規則43.6の2(a)）。

ｃ．☐ この国際出願は、ヌクレオチド又はアミノ酸配列を含んでいる（第Ｉ欄参照）。

２．☐ 請求の範囲の一部の調査ができない（第Ⅱ欄参照）。

３．☐ 発明の単一性が欠如している（第Ⅲ欄参照）。

４．発明の名称は ☑ 出願人が提出したものを承認する。
☐ 次に示すように国際調査機関が作成した。

＿＿＿＿＿＿＿＿＿＿＿＿＿＿＿＿

５．要約は ☑ 出願人が提出したものを承認する。
☐ 第Ⅳ欄に示されているように、法施行規則第47条第１項（ＰＣＴ規則38.2）の規定により国際調査機関が作成した。出願人は、この国際調査報告の発送の日から１月以内にこの国際調査機関に意見を提出することができる。

６．図面に関して
ａ．要約書とともに公表される図は、
第 ２ 図とする。☑ 出願人が示したとおりである。
☐ 出願人は図を示さなかったので、国際調査機関が選択した。
☐ 本図は発明の特徴を一層よく表しているので、国際調査機関が選択した。

ｂ．☐ 要約とともに公表される図はない。

国際調査報告

国際出願番号　ＰＣＴ／ＪＰ２００９／００６２１４

Ａ．　発明の属する分野の分類（国際特許分類（ＩＰＣ））

Int.Cl.　G09G3/30(2006.01)i, G09G3/20(2006.01)i, H01L51/50(2006.01)i

Ｂ．　調査を行った分野

調査を行った最小限資料（国際特許分類（ＩＰＣ））

Int.Cl.　G09G3/30, G09G3/20, H01L51/50

最小限資料以外の資料で調査を行った分野に含まれるもの

日本国実用新案公報	１９２２－１９９６年
日本国公開実用新案公報	１９７１－２００９年
日本国実用新案登録公報	１９９６－２００９年
日本国登録実用新案公報	１９９４－２００９年

国際調査で使用した電子データベース（データベースの名称、調査に使用した用語）

Ｃ．　関連すると認められる文献

引用文献のカテゴリー＊	引用文献名　及び一部の箇所が関連するときは、その関連する箇所の表示	関連する請求項の番号
A	JP 2008-203657 A（ソニー株式会社）2008.09.04, 段落【００５６】－【００６８】, 図１０－１２ & US 2008/0198111 A1 & KR 10-2008-0077906 A & CN 101251975 A	1-4,7-11
A	JP 2009-204979 A（ソニー株式会社）2009.09.10, 段落【０１３９】－【０１６３】, 図４７－５９（ファミリーなし）	1-4,7-11

☑ Ｃ欄の続きにも文献が列挙されている。　☐ パテントファミリーに関する別紙を参照。

＊　引用文献のカテゴリー
「Ａ」特に関連のある文献ではなく、一般的技術水準を示すもの
「Ｅ」国際出願日前の出願または特許であるが、国際出願日以後に公表されたもの
「Ｌ」優先権主張に疑義を提起する文献又は他の文献の発行日若しくは他の特別な理由を確立するために引用する文献（理由を付す）
「Ｏ」口頭による開示、使用、展示等に言及する文献
「Ｐ」国際出願日前で、かつ優先権の主張の基礎となる出願の日の後に公表された文献
「Ｔ」国際出願日又は優先日後に公表された文献であって出願と矛盾するものではなく、発明の原理又は理論の理解のために引用するもの
「Ｘ」特に関連のある文献であって、当該文献のみで発明の新規性又は進歩性がないと考えられるもの
「Ｙ」特に関連のある文献であって、当該文献と他の１以上の文献との、当業者にとって自明である組合せによって進歩性がないと考えられるもの
「&」同一パテントファミリー文献

国際調査を完了した日	国際調査報告の発送日
０３．１２．２００９	１５．１２．２００９

国際調査機関の名称及びあて先	特許庁審査官（権限のある職員）	2G	3805
日本国特許庁（ＩＳＡ／ＪＰ） 郵便番号１００－８９１５ 東京都千代田区霞が関三丁目４番３号	長井　真一 電話番号　０３－３５８１－１１０１　内線　３２２６		

Ｃ（続き）．　関連すると認められる文献

引用文献のカテゴリー＊	引用文献名　及び一部の箇所が関連するときは、その関連する箇所の表示	関連する請求項の番号
A	JP 2006-215213 A (ソニー株式会社) 2006.08..17, 段落【００３５】－【００５９】, 図５－１１ & US 2006/0170628 A1 & US 2007/0247399 A1 & KR 10-2006-0088828 A & CN 1815538 A	1,5-11

特許協力条約

発信人　日本国特許庁（国際調査機関）

代理人
新居広守
様

あて名
〒532-0011
日本国大阪府大阪市淀川区西中島５丁目３番１０号
タナカ・イトーピア新大阪ビル６階新居国際特許事務所内

09.12.16

ＰＣＴ
国際調査機関の見解書
（法施行規則第40条の2）
〔ＰＣＴ規則43の2.1〕

発送日 （日.月.年）	１５．１２．２００９
出願人又は代理人 の書類記号　P054560P0	今後の手続きについては、下記２を参照すること。

国際出願番号	国際出願日	優先日
ＰＣＴ／ＪＰ２００９／００６２１４	（日.月.年）　１９．１１．２００９	（日.月.年）

国際特許分類（ＩＰＣ）Int.Cl. G09G3/30(2006.01)i, G09G3/20(2006.01)i, H01L51/50(2006.01)i

出願人（氏名又は名称）
パナソニック株式会社

１．この見解書は次の内容を含む。

- ☑ 第Ｉ欄　見解の基礎
- ☐ 第Ⅱ欄　優先権
- ☐ 第Ⅲ欄　新規性、進歩性又は産業上の利用可能性についての見解の不作成
- ☐ 第Ⅳ欄　発明の単一性の欠如
- ☑ 第Ⅴ欄　ＰＣＴ規則43の2.1(a)(i)に規定する新規性、進歩性又は産業上の利用可能性についての見解、それを裏付けるための文献及び説明
- ☐ 第Ⅵ欄　ある種の引用文献
- ☐ 第Ⅶ欄　国際出願の不備
- ☐ 第Ⅷ欄　国際出願に対する意見

２．今後の手続き
国際予備審査の請求がされた場合は、出願人がこの国際調査機関とは異なる国際予備審査機関を選択し、かつ、その国際予備審査機関がＰＣＴ規則66.1の2(b)の規定に基づいて国際調査機関の見解書を国際予備審査機関の見解書とみなさない旨を国際事務局に通知していた場合を除いて、この見解書は国際予備審査機関の最初の見解書とみなされる。

この見解書が上記のように国際予備審査機関の見解書とみなされる場合、様式ＰＣＴ／ＩＳＡ／２２０を送付した日から３月又は優先日から２２月のうちいずれか遅く満了する期限が経過するまでに、出願人は国際予備審査機関に、適当な場合は補正書とともに、答弁書を提出することができる。

さらなる選択肢は、様式ＰＣＴ／ＩＳＡ／２２０を参照すること。

３．さらなる詳細は、様式ＰＣＴ／ＩＳＡ／２２０の備考を参照すること。

見解書を作成した日
０３．１２．２００９

名称及びあて先 日本国特許庁（ＩＳＡ／ＪＰ） 郵便番号１００－８９１５ 東京都千代田区霞が関三丁目４番３号	特許庁審査官（権限のある職員） 長井　真一	２Ｇ	３８０５
	電話番号　０３－３５８１－１１０１　内線　３２２６		

国際調査機関の見解書

国際出願番号　ＰＣＴ／ＪＰ２００９／００６２１４

第Ｉ欄　見解の基礎

１．言語に関し、この見解書は以下のものに基づき作成した。

☑ 出願時の言語による国際出願

☐ 出願時の言語から国際調査のための言語である ＿＿＿＿＿＿ 語に翻訳された、この国際出願の翻訳文（ＰＣＴ規則12.3(a)及び23.1(b)）

２．☐ この見解書は、ＰＣＴ規則 91 の規定により国際調査機関が認めた又は国際調査機関に通知された明らかな誤りの訂正を考慮して作成した（ＰＣＴ規則 43 の 2.1(b)）。

３．この国際出願で開示されたヌクレオチド又はアミノ酸配列に関して、以下に基づき見解書を作成した。

ａ．タイプ　☐ 配列表

☐ 配列表に関連するテーブル

ｂ．フォーマット　☐ 紙形式

☐ 電子形式

ｃ．提出時期　☐ 出願時の国際出願に含まれていたもの

☐ この国際出願と共に電子形式により提出されたもの

☐ 出願後に、調査のために、この国際調査機関に提出されたもの

４．☐ さらに、配列表又は配列表に関連するテーブルを提出した場合に、出願後に提出した配列若しくは追加して提出した配列が出願時に提出した配列と同一である旨、又は、出願時の開示を超える事項を含まない旨の陳述書の提出があった。

５．補足意見：

国際調査機関の見解書

国際出願番号　ＰＣＴ／ＪＰ２００９／００６２１４

第Ｖ欄　新規性、進歩性又は産業上の利用可能性についてのＰＣＴ規則 43 の 2.1(a)(i)に定める見解、それを裏付ける文献及び説明

１．　見解

新規性（Ｎ）	請求項	1-11	有
	請求項		無
進歩性（ＩＳ）	請求項	1-11	有
	請求項		無
産業上の利用可能性（ＩＡ）	請求項	1-11	有
	請求項		無

２．　文献及び説明

文献１：JP 2008-203657 A（ソニー株式会社）2008.09.04, 段落【００５６】－【００６８】, 図１０－１２
文献２：JP 2009-204979 A（ソニー株式会社）2009.09.10, 段落【０１３９】－【０１６３】, 図４７－５９
文献３：JP 2006-215213 A（ソニー株式会社）2006.08.17, 段落【００３５】－【００５９】, 図５－１１

請求項１－１１に係る発明は、国際調査報告で引用された上記何れの文献にも開示されておらず、新規性及び進歩性を有する。

UNITED STATES PATENT AND TRADEMARK OFFICE

Commissioner for Patents
United States Patent and Trademark Office
P.O. Box 1450
Alexandria, VA 22313-1450
www.uspto.gov

GREENBLUM & BERNSTEIN, P.L.C.
1950 ROLAND CLARKE PLACE
RESTON VA 20191

MAILED
FEB 07 2012
OFFICE OF PETITIONS

In re Application of
Masafumi Matsui et al.
Application No.: 13/035,175
Filed: February 25, 2011
Attorney Docket No.: P38258
For: Display Panel Device, Display Device, and Control Method Therof

: DECISION ON REQUEST TO
: PARTICIPATE IN THE PATENT
: PROSECUTION HIGHWAY
: PROGRAM AND PETITION
: TO MAKE SPECIAL UNDER
: 37 CFR 1.102(a)

This is a decision on the request to participate in the PCT Patent Prosecution Highway (PCT-PPH) pilot program and the petition under 37 CFR 1.102(a), filed on December 14, 2011, to make the above-identified application special.

The request and petition are **DISMISSED**.

Discussion

A grantable request to participate in the PCT-PPH pilot program and petition to make special require:

1) The U.S. application must have an eligible relationship to one or more PCT applications where the ISA or IPEA are Australia, Austria, China, EPO, Finland, JPO, Korea, NPI, Russia, Spain, Sweden and the USPTO;

(2) At least one claim in the PCT application has novelty, inventive step, and industrial applicability and must be free of any observations in Box VIII in the latest work product in the international stage or applicant must identify and explain why the claim(s) is/are not subject to the observation in Box VIII;

(3) Applicant must submit a copy of the claim(s) from the PCT application(s) that have novelty, inventive step, and industrial applicability along with an English translation thereof and a statement that the English translation is accurate, if the claims are not in the English language;

(4) All the claims in the U.S. application must sufficiently correspond or be amended to sufficiently correspond to the claim(s) that have novelty, inventive step, and industrial applicability in the PCT application(s);

(5) Examination of the U.S. application has not begun;

(6) Applicant must submit a copy of the latest international work product from the PCT application indicating that the claim(s) have novelty, inventive step, and industrial applicability along with an English translation thereof and a statement that the English translation is accurate if the latest international work product is not in the English language;

(7) Applicant must submit an IDS listing the documents cited by the PCT examiner in the international work product along with copies of documents except U.S. patents or U.S. patent application publications.

(8) Applicant is required to submit a claims correspondence table in English which indicates how all the claims in the U.S. application correspond to the claims indicated as having novelty, inventive step and industrial applicability in the latest international work product.

Requirements (1-5), and (7-8) above are considered to have been met. However, the request to participate in the PPH pilot program and petition fail to meet requirement (3).

Regarding requirement (6), a full translation of the international work product and a statement that the English translation of the international work product is accurate was not submitted with the petition.

Applicant is given **ONE** opportunity within a time period of **ONE MONTH or THIRTY DAYS**, whichever is longer, from the mailing date of this decision to correct the deficiencies. **NO EXTENSION OF TIME UNDER 37 CFR 1.136 IS PERMITTED.** If the deficiencies are not corrected with the time period given, the application will await action in its regular turn.

Response must be filed via the Electronic Filing System (EFS) using the document description: Petition to make special under PCT – Patent Pros Hwy. Any preliminary amendments and IDS submitted with the PPH documents must be separately indexed as a preliminary amendment and IDS, respectively.

Telephone inquiries concerning this decision should be directed to Kimberly Inabinet at 571-272-4618.

All other inquiries concerning the examination or status of the application is accessible in the PAIR system at http://www.uspto.gov/ebc/index.html.

David Bucci
Petitions Examiner
Office of Petitions

P38258.A03

IN THE UNITED STATES PATENT AND TRADEMARK OFFICE

Applicants	: Masafumi MATSUI et al.	Art Unit	: 2629
Appl. No.	: 13/035,175 (Continuation of PCT/JP2009/006214)	Examiner	: Richard A. Hjerpe
Filed	: February 25, 2011	Conf. No.	: 2287
For	: DISPLAY PANEL DEVICE, DISPLAY DEVICE, AND CONTROL METHOD THEREOF		

RESPONSE TO DECISION ON THE REQUEST TO PARTICIPATE IN THE PCT PATENT PROSECUTION HIGHWAY (PCT-PPH) PILOT PROGRAM AND THE PETITION TO MAKE SPECIAL UNDER 37 CFR 1.102(A)

Commissioner for Patents
U.S. Patent and Trademark Office
Customer Service Window, Mail Stop Petition
Randolph Building
401 Dulany Street
Alexandria VA 22314

Sir:

On February 7, 2012, the U.S. Patent and Trademark Office issued a Decision on Applicants' Request to Participate in the PCT Patent Prosecution Highway (PCT-PPH) Pilot Program and Petition to Make Special under 37 CFR 1.102(a) (hereinafter "Request and Petition"), which was filed on December 14, 2011. The Decision sets forth a thirty day period for response that expires on March 8, 2012.

Initially, Applicants note that the Decision appears to inadvertently indicate that the Request and Petition fail to meet requirement (3). That is, the Decision indicates that Requirements (1-5) and (7-8) are considered to have been met. Nevertheless the Decision indicates that the Request and Petition fail to meet requirement (3), but further indicates that,

"Regarding **requirement (6)**, a full translation of the international work product and a statement that the English translation of the international work product is accurate was not submitted with the petition."

In this regard, Applicants' representative contacted Petitions Examiner Kimberly Inabinet to confirm the reasons for which the Decision dismissed the Request and Petition. Petitions Examiner Inabinet confirmed that the Decision dismissed the Request and Petition as failing to meet **requirement (6)**, not requirement (3). In other words, Applicants did submit a copy of the claims from the PCT application that have novelty, inventive step, and industrial applicability along with an English language translation thereof and a statement that the English language translation is accurate.

Thus, the Decision inadvertently indicates that the Request and Petition fail to meet requirement (3), and should indicate that the Request and Petition fail to meet requirement (6).

As for the reasoning regarding the failure to meet requirement (6), the Decision indicates that, "a full translation of the international work product and a statement that the English language translation of the international work product is accurate was not submitted with the petition." In this regard, Applicants respectfully submit that a statement that the English language translation of the international work product is accurate is <u>not</u> required. That is, as discussed and acknowledged by Petitions Examiner Inabinet, the Request for Participation in the Patent Cooperation Treaty – Patent Prosecution Highway (PCT-PPH) Pilot Program only requires that a statement that the English language translation of the claims indicated as having novelty, inventive step, and industrial applicability be submitted.

Section I.C. of Form PTO/SB/20PCT-JP clearly indicates that a statement that the English language translation of the international work product is accurate is <u>not</u> required.

Moreover, Patent and Trademark Office Notice 1351 OG 209 states, in pertinent part and with emphasis added:

> (6) Unless already filed in the U.S. application for which participation in the PCT-PPH pilot program is requested, applicant must submit a copy of the latest international work product, WO/ISA, or WO/IPEA or IPER, which indicated that the claim(s) has/have novelty, inventive step and industrial applicability along with an English translation thereof if the copy of the latest international work product is not in the English language. ***A statement that the English translation is accurate is not required.*** Where the required documents have been previously filed in the U.S. application, applicant may simply refer to these documents and indicate in the request for participation in the PCT-PPH pilot program when these documents were previously filed in the U.S. application. Where the U.S. application and the corresponding PCT application satisfy the relationship noted in B.(1)(a) above, applicant need not submit a copy of the latest international work product along with an English translation thereof since a copy of these documents is already contained in the file wrapper of the U.S. application.

At least in view of the above and as acknowledged by Petitions Examiner Inabinet, Applicants respectfully submit that requirement (6) does not require a statement that the English language translation is accurate be submitted.

As for the reasoning that a full translation of the international work product was not submitted, Applicants submit herewith a full translation of the international work product. Thus, Applicants submit that requirement (6) will be met upon entry of the present paper. Accordingly, Applicants submit that all of the requirements for participating in the PCT-PPH Pilot Program have been met, and thus respectfully request that the Examiner reconsider and grant Applicants' Request and Petition. Such action is respectfully requested and believed to be appropriate.

While no fee is believed to be due, should the Commissioner determine that any fee is required in order to render this paper timely and/or complete, the Commissioner is authorized to charge any additional fee to Deposit Account No. 19-0089.

If there should be any questions concerning this application, the Examiner is invited to contact the undersigned at the telephone number listed below.

Respectfully submitted,
Masafumi MATSUI et al.

/James P. Bonnamy/
Reg. No. 63,649
James P. Bonnamy

Bruce H. Bernstein
Reg. No. 29027

Encl: Decision on Request to Participate in the Patent Prosecution Highway Program and Petition to Make Special under 37 CFR 1.102(a) (copy)

Full Translation of International Work Product in PCT/JP2009/006214

March 8, 2012
GREENBLUM & BERNSTEIN, P.L.C.
1950 Roland Clarke Place
Reston, VA 20191
(703) 716-1191

UNITED STATES PATENT AND TRADEMARK OFFICE

Commissioner for Patents
United States Patent and Trademark Office
P.O. Box 1450
Alexandria, VA 22313-1450
www.uspto.gov

GREENBLUM & BERNSTEIN, P.L.C.
1950 ROLAND CLARKE PLACE
RESTON VA 20191

MAILED
MAR 22 2012
OFFICE OF PETITIONS

In re Application of
Masafumi Matsui et al.
Application No.: 13/035,175
Filed: February 25, 2011
Attorney Docket No.: P38258
For: Display Panel Device, Display Device, and Control Method Thereof

: DECISION ON REQUEST TO
: PARTICIPATE IN THE PATENT
: PROSECUTION HIGHWAY
: PROGRAM AND PETITION
: TO MAKE SPECIAL UNDER
: 37 CFR 1.102(a)

This is a decision on the renewed request to participate in the PCT Patent Prosecution Highway (PCT-PPH) pilot program and the petition under 37 CFR 1.102(a), filed on March 8, 2012, to make the above-identified application special.

The request and petition are **GRANTED**.

Discussion

A grantable request to participate in the PCT-PPH pilot program and petition to make special require:

1) The U.S. application must have an eligible relationship to one or more PCT applications where the ISA or IPEA are Australia, Austria, China, EPO, Finland, JPO, Korea, NPI, Russia, Spain, Sweden and the USPTO;

(2) At least one claim in the PCT application has novelty, inventive step, and industrial applicability and must be free of any observations in Box VIII in the latest work product in the international stage or applicant must identify and explain why the claim(s) is/are not subject to the observation in Box VIII;

(3) Applicant must submit a copy of the claim(s) from the PCT application(s) that have novelty, inventive step, and industrial applicability along with an English translation thereof and a statement that the English translation is accurate, if the claims are not in the English language;

(4) All the claims in the U.S. application must sufficiently correspond or be amended to sufficiently correspond to the claim(s) that have novelty, inventive step, and industrial applicability in the PCT application(s);

(5) Examination of the U.S. application has not begun;

(6) Applicant must submit a copy of the latest international work product from the PCT application indicating that the claim(s) have novelty, inventive step, and industrial applicability along with an English translation thereof and a statement that the English translation is accurate if the latest international work product is not in the English language;

(7) Applicant must submit an IDS listing the documents cited by the PCT examiner in the international work product along with copies of documents except U.S. patents or U.S. patent application publications.

The request to participate in the PCT-PPH pilot program and petition comply with the above requirements. Accordingly, the above-identified application has been accorded "special" status.

Telephone inquiries concerning this decision should be directed to Kimberly Inabinet at 571-272-4618.

All other inquiries concerning the examination or status of the application is accessible in the PAIR system at http://www.uspto.gov/ebc.index.html.

This application will be forwarded to the examiner for action on the merits commensurate with this decision.

Thurman Page
Petitions Examiner
Office of Petitions

UNITED STATES PATENT AND TRADEMARK OFFICE

Commissioner for Patents
United States Patent and Trademark Office
P.O. Box 1450
Alexandria, VA 22313-1450
www.uspto.gov
DIW Jun-11

DIEHL SERVILLA LLC (COG/CGG)
33 WOOD AVE SOUTH
SECOND FLOOR, SUITE 210
ISELIN NJ 08830

MAILED
JUN 06 2011
OFFICE OF PETITIONS

In re Application of	:	
Muzenberg et al.	:	
Application Number: 13/035,241	:	
Deposited: 02/25/2011	:	DECISION ON PETITION
Attorney Docket Number: C 3512	:	
US P41023 USA	:	

This is a decision on the petition under 37 CFR 1.57(a), filed on April 19, 2011, requesting that the above-identified application be accorded a filing date of February 25, 2011.

The petition is **DISMISSED**.

BACKGROUND

On February 25, 2011, the application was deposited. The application papers consisted of, *inter alia*, a transmittal sheet, and an Application Data Sheet (ADS) including a claim of benefit to prior-filed German EP Application No. 10001928.0 filed on February 25, 2010.

Accordingly, on April 5, 2011, the Office of Patent Application Processing (OPAP) mailed a Notice of Incomplete Nonprovisional Application, stating the application had not been accorded a

filing date because the specification, including at least one claim, as required by 35 U.S.C. 112, is missing.

On April 19, 2011, the subject petition was filed, accompanied by a specification including at least one claim. Petitioners concede that the specification was inadvertently omitted from the application papers deposited on February 25, 2011, but request a filing date of February 25, 2011, because the application claims the benefit of the above-referenced prior-filed foreign application.

Relying on §1.57(a), applicant asserts that the specification is effectively incorporated by reference.

OPINION

37 CFR 1.57 states, in pertinent part:

> (a) Subject to the conditions and requirements of this paragraph, if all or a portion of the specification or drawing(s) is inadvertently omitted from an application, but the application contains a claim under § 1.55 for priority of a prior-filed foreign application, or a claim under § 1.78 for the benefit of a prior-filed provisional, nonprovisional, or international application, that was present on the filing date of the application, and the inadvertently omitted portion of the specification or drawing(s) is completely contained in the prior-filed application, the claim under § 1.55 or § 1.78 shall also be considered an incorporation by reference of the prior-filed application as to the inadvertently omitted portion of the specification or drawing(s).
>
> (1) **The application must be amended to include the inadvertently omitted portion of the specification or drawing(s) within any time period set by the Office, but in no case later than the close of prosecution as defined by § 1.114(b), or abandonment of the application, whichever occurs earlier. The applicant is also required to:**
>
> **(i) Supply a copy of the prior-filed application, except where the prior-filed application is an application filed under 35 U.S.C. 111;**

> (ii) Supply an English language translation of any prior-filed application that is in a language other than English; and
>
> (iii) Identify where the inadvertently omitted portion of the specification or drawings can be found in the prior-filed application.
>
> ...
>
> (3) If an application is not otherwise entitled to a filing date under § 1.53(b), the amendment must be by way of a petition pursuant to this paragraph, accompanied by the fee set forth in § 1.17(f).
>
> (emphasis added)

At the outset, petitioners have not provided an amendment to include the inadvertently omitted specification as required by 37 CFR 1.57(a). A renewed petition, accompanied by the required preliminary amendment to add the specification, must be filed.

Further, petitioners must supply a copy of the original German language priority document. In this regard, while petitioners state that a copy of an English language translation of the foreign language priority document is supplied with the petition, 37 CFR 1.57(a)(1)(i) requires that a copy of the prior-filed application must be filed if the prior-filed application is not an application filed under 35 USC 111. A statement that the English language translation is accurate must also be supplied.

Any request for reconsideration should be filed within **TWO (2) MONTHS** of the date of this decision in order to be considered timely. This time period may <u>not</u> be extended pursuant to 37 CFR 1.136.

The address in the petition is different than the correspondence address. A courtesy copy of this decision is being mailed to the address in the petition. All future correspondence, however, will be mailed solely to the address of record. A change of correspondence address should be filed if the correspondence address needs to be updated.

Further correspondence with respect to this matter should be addressed as follows:

By mail: Mail Stop Petition
Commissioner for Patents
P.O. Box 1450
Alexandria, VA 22313-1450

By FAX: (571) 273-8300
Attn: Office of Petitions

By hand: Customer Service Window
Mail Stop Petition
Randolph Building
401 Dulany Street
Alexandria, VA 22314

Telephone inquiries specific to this decision should be directed to Senior Petitions Attorney Douglas I. Wood at 571.272.3231.

Christopher Bottorff
Petitions Examiner
Office of Petitions

Cf: FOX ROTHSCHILD LLP
2000 MARKET ST, 20TH FLOOR
PHILADELPHIA PA 19103-0322

UNITED STATES PATENT AND TRADEMARK OFFICE

Commissioner for Patents
United States Patent and Trademark Office
P.O. Box 1450
Alexandria, VA 22313-1450
www.uspto.gov
DIW Aug-11

DIEHL SERVILLA LLC (COG/CGG)
33 WOOD AVE SOUTH
SECOND FLOOR, SUITE 210
ISELIN NJ 08830

MAILED
SEP 07 2011
OFFICE OF PETITIONS

In re Application of	:	
Muzenberg et al.	:	DECISION ON PETITION
Application Number: 13/035,241	:	
Deposited: 02/25/2011	:	
Attorney Docket Number: C 3512	:	
US P41023 USA	:	

This is a decision on the renewed petition under 37 CFR 1.57(a), filed on August 5, 2011.

The petition is **GRANTED**.

On February 25, 2011, the application was deposited. The application papers consisted of, *inter alia*, a transmittal sheet, and an Application Data Sheet (ADS) including a claim of benefit to prior-filed German EP Application No. 10001928.0 filed on February 25, 2010.

Accordingly, on April 5, 2011, the Office of Patent Application Processing (OPAP) mailed a Notice of Incomplete Nonprovisional Application, stating the application had not been accorded a filing date because the specification, including at least one claim, as required by 35 U.S.C. 112, is missing.

On April 19, 2011, the initial petition was filed, accompanied by a specification including at least one claim. Petitioners conceded that the specification was inadvertently omitted from the application papers deposited on February 25, 2011, but requested a filing date of February 25, 2011, because the application claims the benefit of the above-referenced prior-filed foreign application.

On June 6, 2011, the petition was dismissed for want of an amendment to include the inadvertently omitted specification as required by 37 CFR 1.57(a) as well as a copy of the prior-filed

foreign German language priority document, and a statement that the English language translation is accurate.

On August 5, 2011, the subject renewed petition was filed, accompanied by an amendment including a claim of priority to the prior-filed foreign application, as well as a copy of the foreign German application, and a translation thereof.

On September 21, 2004, § 1.57 was added to read, in pertinent part that:

> (a) Subject to the conditions and requirements of this paragraph, if all or a portion of the specification or drawing(s) is inadvertently omitted from an application, but the application contains a claim under 1.55 for priority of a prior-filed foreign application … that was present on the filing date of the application, and the inadvertently omitted portion of the specification or drawing(s) is completely contained in the prior-filed application, the claim under § 1.55 … shall also be considered an incorporation by reference of the prior-filed application as to the inadvertently omitted portion of the specification or drawing(s).
>
> (1) The application must be amended to include the inadvertently omitted portion of the specification or drawing(s) within any time period set by the Office, but in no case later than the close of prosecution as defined by § 1.114(b), or abandonment of the application, whichever occurs earlier. The applicant is also required to:
>
> (i) Supply a copy of the prior-filed application, except where the prior filed application is an application under 35 U.S.C. § 111;
>
> (ii) Supply an English language translation of any prior-filed application that is in a language other than English
>
> …
>
> (3) If an application is not otherwise entitled to a filing date under § 1.53(b), the amendment must be by way of a petition pursuant to this paragraph accompanied by the fee set forth in § 1.17(f).

A review of the application as filed reveals that it included, in the Application Data Sheet and executed declaration filed with the original application papers deposited on February 25, 2011, a claim to benefit of the prior-filed foreign EP Application No. 10001928.0, filed on February 25, 2010. A copy of the prior-filed foreign application has now been supplied, accompanied by an English translation thereof, and an amendment requesting entry thereof.

In view thereof, the petition under § 1.57(a) is **GRANTED**. The amendment will be entered in due course.

Receipt of the petition fee is acknowledged. The duplicate petition fee filed on August 5, 2011 is unnecessary and will be refunded to counsel.

This application is being forwarded to the Office of Patent Application Processing (OPAP) for further processing with a filing date of February 25, 2011, using the application papers received in the Office that date, as well as the preliminary amendment filed with the subject petition, and for an indication in the records of the Office that the application, as filed.

The Office is construing the petition to mean that the translation of the foreign priority document is accurate. Petitioners must notify the Office if this is an incorrect interpretation.

The application is referred to the Office of Patent Application Processing for further processing. Applicant will receive appropriate notification regarding the fees owed, if any, and other information in due course from OPAP.

Telephone inquiries specific to this decision should be directed to Senior Petitions Attorney Douglas I. Wood at 571.272.3231.

Christopher Bottorff
Petitions Examiner
Office of Petitions

UNITED STATES PATENT AND TRADEMARK OFFICE

UNITED STATES DEPARTMENT OF COMMERCE
United States Patent and Trademark Office
Address: COMMISSIONER FOR PATENTS
P.O. Box 1450
Alexandria, Virginia 22313-1450
www.uspto.gov

APPLICATION NO.	FILING DATE	FIRST NAMED INVENTOR	ATTORNEY DOCKET NO.	CONFIRMATION NO.
13/035,459	02/25/2011	Theodore J. Myers	091721-0130	2850

23524 7590 03/15/2011
FOLEY & LARDNER LLP
150 EAST GILMAN STREET
P.O. BOX 1497
MADISON, WI 53701-1497

EXAMINER

ART UNIT	PAPER NUMBER
2611	

MAIL DATE	DELIVERY MODE
03/15/2011	PAPER

Please find below and/or attached an Office communication concerning this application or proceeding.

The time period for reply, if any, is set in the attached communication.

UNITED STATES PATENT AND TRADEMARK OFFICE

Commissioner for Patents
United States Patent and Trademark Office
P.O. Box 1450
Alexandria, VA 22313-1450
www.uspto.gov

FOLEY & LARDNER LLP
150 EAST GILMAN STREET
P.O. BOX 1497
MADISON WI 53701-1497

In re Application of: MYERS, THEODORE J., ET AL. Serial No.: 13/035,459 Filed: February 25, 2011 Docket: **091721-0130** Title: **RSSI MEASUREMENT MECHANISM IN THE PRESENCE OF PULSED JAMMERS**	DECISION ON PETITION TO MAKE SPECIAL FOR NEW APPLICATION UNDER 37 C.F.R. § 1.102 & M.P.E.P. § 708.02

This is a decision on the petition filed on _____ to make the above-identified application special for accelerated examination procedure under 37 C.F.R. § 1.102(d).

The petition to make the application special is **DISMISSED**.

REGULATION AND PRACTICE

A grantable petition to make special under 37 C.F.R. § 1.102(d) and pursuant to the "Change to Practice for Petitions in Patent Applications to Make Special and for Accelerated Examination" published in the Federal Register on June 26, 2006 (71 Fed. Reg. 36323), must satisfy the following conditions:

I. Conditions Regarding the Application:

1. the application must be a non-reissue utility or design application filed under 37 CFR 1.111(a);

2. the application, the petition and the required fees must be filed electronically using the USPTO's electronic filing system (EFS), or EFS-web; if not filed electronically, a statement asserting that EFS and EFS-web were not available during the normal business hours.

3. at the time of filing, the application must be complete under 37 CFR 1.51 and in condition for examination;

4. the application must contain three or fewer independent claims and twenty or fewer total claims and the claims must be directed to a single invention.

II. Conditions Regarding the Petition:

The petition must:

1. be filed with the application;

2. include a statement that applicant agrees not to separately argue the patentability of any independent claim during any appeal in the application;

3. include a statement that applicant agrees to make an election without traverse in a telephone interview.

4. include a statement that applicant agrees to conduct such an interview when requested by the examiner.

5. include a statement, made based on a good faith belief, that a preexamination search in compliance with the following requirements, was conducted, including an identification of the field of search by United States class and subclass, where applicable, and for database searches, the search logic or chemical structure or sequence used as a query, the name of the file(s) searched and the database service, and the date of the search.

The preexamination search must:

5.1 involve U.S. patents and patent application publications, foreign patent documents, and non-patent literature, unless the applicant can justify with reasonable certainty that no references more pertinent than those already identified are likely to be found in the eliminated sources and includes such a justification with this statement;

5.2. be directed to the claimed invention and encompass all of the features of the claims, giving the claims the broadest reasonable expectation;

5.3. encompass the disclosed features that may be claimed.

6. must provide in support of the petition an accelerated examination support document. An accelerated examination support document must include:

6.1. an information disclosure statement (IDS) in compliance with 37 CFR 1.98 citing each reference deemed most closely related to the subject matter of each of the claims;

6.2. an identification of all the limitations in the claims that are disclosed by the reference specifying where the limitation is disclosed in the cited reference;

6.3. a detailed explanation of how each of the claims are patentable over the references cited with particularity required by 37 CFR 1.111(b) and (c);

6.4. a concise statement of the utility of the invention as defined in each of the independent claims (unless the application is a design application);

6.5. a showing of where each limitation of the claims finds support under 35 USC 112, first paragraph, in the written description of the specification. If applicable, the showing must also identify: (1) each means- (or step) plus-function claim element that invokes consideration under 35 UDC 112, sixth paragraph; and (2) the structure, material, or acts in the specification that corresponds to each means- (or step) plus-function claim element that invokes consideration under 35 UDC 112, sixth paragraph; if the application claims the benefit of one or more applications under title 35, United States Code, the showing must also include where each limitation of the claims finds support under 35 USC 112, first paragraph, in each such application in which such supports exists;

6.6. an identification of any cited references that may be disqualified under 35 USC 103(c).

REVIEW OF FACTS

The conditions set forth under section I. above are considered to have been met. However, the petition fails to comply with conditions set forth under section II. item 5.

For these reasons cited above, the petition fails to meet the required conditions to be accorded special status under the accelerated examination procedure.

Regarding the requirement in item 5. above, the preexamination search document provided with the instant petition is deficient as follows: the US Field of Search and Databases Searches which are to be provided under section 8(a) are not sufficient. In addition to the field of search provided, applicant would also need to search in the following class/sublasses: 375/142, 150, 219 and 455/522.

If any request for reconsideration is filed, an updated preexamination search must be conducted as per item 5 above, and the Preexamination Search Document must be amended to indicate such; a new Information Disclosure Statement should be filed to cite any newly found prior art, and the Accelerated Examination Support Document must also be amended to include the necessary reference and discussion of any newly found and cited prior art in accordance with all of items 6 through 6.6 above; as well as the necessary updated discussion of patentability for each of the dependent claims (or a statement that claims stand or fall together) as set forth above.

DECISION

For the above-stated reasons, the petition is **dismissed**. The application will therefore be taken up by the examiner for action in its regular turn.

Petitioner is given a single opportunity to perfect the petition. Any request for reconsideration of this decision must be submitted within 1 (one) month or 30 (thirty) days, whichever is longer, (no extension of time under 37 CFR 1.136(a)) from the date of this decision in order to be considered timely. Any request for reconsideration must address the deficiencies indicated above.

Petitioner is reminded that, upon granting of the special status of the application on request for reconsideration, the application will be processed expeditiously. However, due to the dismissal of the instant petition, examination may not be completed within twelve months of the filing date of the application.

Any inquiry regarding this decision should be directed to Wellington Chin, Quality Assurance Specialist, at (571) 272-3134.

/Wellington Chin/

Wellington Chin, Special Program Examiner
Technology Center 5000

UNITED STATES PATENT AND TRADEMARK OFFICE

UNITED STATES DEPARTMENT OF COMMERCE
United States Patent and Trademark Office
Address: COMMISSIONER FOR PATENTS
P.O. Box 1450
Alexandria, Virginia 22313-1450
www.uspto.gov

APPLICATION NO.	FILING DATE	FIRST NAMED INVENTOR	ATTORNEY DOCKET NO.	CONFIRMATION NO.
13/035,459	02/25/2011	Theodore J. Myers	091721-0130	2850

23524 7590 04/26/2011
FOLEY & LARDNER LLP
150 EAST GILMAN STREET
P.O. BOX 1497
MADISON, WI 53701-1497

EXAMINER
BURD, KEVIN MICHAEL

ART UNIT	PAPER NUMBER
2611	

MAIL DATE	DELIVERY MODE
04/26/2011	PAPER

Please find below and/or attached an Office communication concerning this application or proceeding.

The time period for reply, if any, is set in the attached communication.

United States Patent and Trademark Office

Commissioner for Patents
United States Patent and Trademark Office
P.O. Box 1450
Alexandria, VA 22313-1450
www.uspto.gov

FOLEY & LARDNER LLP
150 EAST GILMAN STREET
P.O. BOX 1497
MADISON WI 53701-1497

In re Application of: MYERS, THEODORE J. et al. Serial No.: 13/035,459 Filed: February 25, 2011 Attorney Docket No: **091721-0130** Title: **RSSI MEASUREMENT MECHANISM IN THE PRESENCE OF PULSED JAMMERS**	DECISION ON PETITION TO MAKE SPECIAL FOR NEW APPLICATION UNDER 37 C.F.R. § 1.102 & M.P.E.P. § 708.02

This is a decision on the petition filed on April 14, 2011 requesting reconsideration to make the above-identified application special for accelerated examination procedure under 37 C.F.R. § 1.102(d).

All of the requirements to correct the deficiencies outlined in the petition decision mailed March 15, 2011 have been met.

The petition to make the application special is **GRANTED**.

The application is eligible for accelerated examination and the petition complies with the conditions for granting the application special status pursuant to the "Change to Practice for Petitions in Patent Applications to Make Special and for Accelerated Examination" published June 26, 2006, in the Federal Register. (71 Fed. Reg. 36323).

The prosecution of the instant application will be conducted expeditiously according to the following guidelines.

1. The application will be docketed to an examiner and taken up for action within two weeks of the date of this decision.

2. Restriction Practice:
   If the examiner determines that the claims are not directed to a single invention, a telephone request to elect one single invention will be made pursuant to MPEP 812.01. As a prerequisite to the grant of this petition, the applicant has agreed to make an oral election, by telephone, without traverse. If the applicant refuses to make an election

without traverse, or the examiner cannot reach the applicant after a reasonable effort, the examiner will treat the first claimed invention (invention defined by claim 1) as having being constructively elected without traverse for examination.

3. Office action:
If it is determined that, after appropriate consultation, there is a potential rejection or any other issue to be addressed, the examiner will telephone the applicant and arrange an interview to discuss and resolve the issue. An Office action, other than a Notice of Allowance and Fee(s) Due (Notice of Allowance), will not be issued unless either: 1) an interview was conducted but did not result in agreed to action that places the application in condition for allowance, or, 2) a determination is made that an interview would be unlikely to result in the application being placed in condition for allowance, and 3) an internal conference has been held to review any rejection of any claim.

4. Time for Reply:
An Office action other than a Notice of Allowance or a final Office action will set a shortened statutory period of one month or thirty days, whichever is longer, for reply with no extension of time available under 37 CFR 1.136(a). Failure to timely file a reply within this non-extendible period for reply will result in the abandonment of the application.

5. Reply by Applicant:
A timely reply to an Office action other than the Notice of Allowance must be submitted electronically via EFS or EFS-web and limited to addressing the rejections, objections and requirement made. Any amendment that attempts to: 1) add claims which would result in more than three pending independent claims or more than twenty pending total claims; 2) present claims not encompassed by the pre-examination search or an updated accelerated examination support document; or 3) present claims that are directed a non-elected invention or an invention other than that previously claimed and examined in the application, will be treated as not fully responsive and will not be entered.

   For any amendment to the claims (including any new claim) that is not encompassed by the accelerated examination support document, applicant must provide an updated accelerated examination support document that encompasses the amended or new claims at the time of filing of the amendment.

   To proceed expeditiously with the examination, it is recommended that a reply with amendments made to any claim or with any new claim being added be accompanied by an updated accelerated examination support document or a statement explaining how the amended or new claim is supported by the original accelerated examination support document.

6. Information Disclosure Statement (IDS):
Any IDS filed during prosecution must be submitted electronically via EFS or EFS-web, accompanied by an updated accelerated examination support document, and be in compliance with 37 CFR 1.97 and 1.98.

7. Post-Allowance Processing:

To expedite processing of the allowed application into a patent, the applicant must: 1) pay the required fees within one month of the date of the Notice of Allowance, and 2) not file any post allowance papers not required by the Office. In no event may the issue fee be paid and accepted later than three months from the date of the Notice of Allowance.

8. After-Final and Appeal Procedures:
   To expedite prosecution, after receiving the final Office action, applicant must: 1) promptly file a notice of appeal, an appeal brief and appeal fees; and 2) not request a pre-appeal brief conference.

   Any amendment, affidavit or other evidence filed after final Office action must comply with applicable rules and the requirements outlined in numbered paragraphs 5 and 6 above.

   On appeal, the application will proceed according to normal appeal procedures. After appeal, the application will again be treated special.

9. Proceedings Outside the Normal Examination Process:
   If the application becomes involved in a proceeding that is outside the normal examination process (e.g., a secrecy order, national security review, interference proceeding, petitions under 37 CFR 1.181, 182 or 183), the application will be treated special before and after such proceeding.

10. Final Disposition:
    The twelve month goal of this accelerated examination procedure ends with a final disposition. The mailing of a final Office action, a Notice of Allowance, the filing of a Notice of Appeal, or the filing of a Request for Continued Examination (RCE) is the final disposition.

If, during prosecution, a paper is not filed electronically using EFS-web, a reply is filed but is not fully responsive, the application is involved in an appeal or a proceeding outside normal examination process, the application will still be examined expeditiously, however, the final disposition may occur more than twelve months from the filing of the application.

Any inquiry regarding this decision should be directed to Wellington Chin, Quality Assurance Specialist, at (571) 272-3134.

/Wellington Chin/

Wellington Chin
Quality Assurance Specialist
Technology Center 2600
Communications

UNITED STATES PATENT AND TRADEMARK OFFICE

Commissioner for Patents
United States Patent and Trademark Office
P.O. Box 1450
Alexandria, VA 22313-1450
www.uspto.gov

LEYDIG VOIT & MAYER, LTD
TWO PRUDENTIAL PLAZA, SUITE 4900
180 NORTH STETSON AVENUE
CHICAGO IL 60601-6731

MAILED
APR 13 2011
OFFICE OF PETITIONS

In re Application of
LeRoy G. HAGENBUCH
Application No. 13/035,587
Filed: February 25, 2011
Attorney Docket No. **706991**

DECISION ON PETITION TO MAKE SPECIAL UNDER 37 CFR 1.102(c)(1)

This is a decision on the petition under 37 CFR 1.102(c)(1), filed February 25, 2011, to make the above-identified application special based on applicant's age as set forth in M.P.E.P. § 708.02, Section IV.

The petition is **GRANTED**.

A grantable petition to make an application special under 37 CFR 1.102(c)(1) and MPEP § 708.02, Section IV: Applicant's Age must be accompanied by evidence showing that at least one of the applicants is 65 years of age, or more, such as a birth certificate or a statement by applicant. No fee is required

The instant petition includes the certification of attorney John B. Conklin registration no. 30,369, attesting to the age of inventor LeRoy G. Hagenbuch. Accordingly, the above-identified application has been accorded "special" status.

Inquiries concerning either the examination or status of the application should be directed to the Technology Center at 571-272-3600.

Telephone inquiries concerning this decision should be directed to the undersigned at 571-272-7253.

The application is being forwarded to the Technology Center Art Unit 3661 for action on the merits commensurate with this decision.

/Monica A. Graves/
Petitions Examiner, Office of Petitions

UNITED STATES PATENT AND TRADEMARK OFFICE

Commissioner for Patents
United States Patent and Trademark Office
P.O. Box 1450
Alexandria, VA 22313-1450
www.uspto.gov

COOLEY LLP
ATTN: PATENT GROUP
SUITE 1100
777 - 6TH STREET, NW
WASHINGTON DC 20001

MAILED

SEP 29 2011

OFFICE OF PETITIONS

In re Application of Boes, Michael Application No. 13/035,614 Filed: February 25, 2011 Attorney Docket No. AFFE-001/01US 313767-2002	: : : : :	DECISION ON PETITION TO WITHDRAW FROM RECORD

This is a decision on the Request to Withdraw as attorney or agent under 37 C.F.R. § 1.36(b) or 37 C.F.R. § 10.40 filed August 31, 2011.

The request is **DISMISSED**.

A review of the file record indicates that the attorneys/agents associated with Customer Number 58249: (1) do not have power of attorney in this patent application; but (2) have been employed or otherwise engaged in the proceedings in this patent application. The Office will no longer approve requests from practitioners to withdraw from applications where the requesting practitioner was never given power of attorney but is acting, or has acted, in a representative capacity pursuant to 37 CFR 1.34. In these situations, the practitioner is responsible for the correspondence the practitioner files in the application while acting in a representative capacity. As such, there is no need for the practitioner to obtain the Office's permission to withdraw from representation.

The change of correspondence address as listed in the Request to Withdraw cannot be accepted because it was not signed by an attorney of record. See MPEP §§ 601.03 and 405. A courtesy copy of this decision is being mailed to the address given on the petition; however, the Office will continue to mail all future correspondence solely to the address of record until otherwise properly notified by the applicant.

There is an outstanding Office action mailed July 19, 2011 that requires a reply from the applicant.

Telephone inquires concerning this decision should be directed to the undersigned at 571-272-3206.

/Liana Walsh/
Liana Walsh
Petitions Examiner
Office of Petitions

cc: MICHAEL BOES
C/O MERCK PATENT GMBH, FRANKFURTER STR. 250,
DARMSTADT 64293 GERMANY

UNITED STATES PATENT AND TRADEMARK OFFICE

Commissioner for Patents
United States Patent and Trademark Office
P.O. Box 1450
Alexandria, VA 22313-1450
www.uspto.gov

TELIK, INC.
C/O FOLEY & LARDNER LLP
975 PAGE MILL ROAD
PALO ALTO CA 94304

MAILED
JUN 17 2011
OFFICE OF PETITIONS

In re Application of	:	
HUGHES	:	
Application No. 13/035,637	:	DECISION ON PETITION
Filed: February 25, 2011	:	TO MAKE SPECIAL UNDER
Attorney Docket No. 056274-4052	:	37 CFR 1.102(c)(1)
	:	

This is a decision on the petition under 37 CFR 1.102(c)(1), filed April 27, 2011, to make the above-identified application special based on applicant's age as set forth in M.P.E.P. § 708.02, Section IV.

The petition is **GRANTED**.

A grantable petition to make an application special under 37 CFR 1.102(c)(1) and MPEP § 708.02, Section IV: Applicant's Age must be accompanied by evidence showing that at least one of the applicants is 65 years of age, or more, such as a birth certificate or a statement by applicant. No fee is required

The instant petition includes a statement by the applicant. Accordingly, the above-identified application has been accorded "special" status.

Telephone inquiries concerning this decision should be directed to the undersigned at (571) 272-6735.

All other inquiries concerning this application should be directed to the Office of Data Management at (571) 272-4000.

The application is being referred to the Office of Data Management for further processing. This application will be accorded "special" status when pre-examination processing is done.

/Diane C. Goodwyn/
Diane C. Goodwyn
Petitions Examiner
Office of Petitions

UNITED STATES PATENT AND TRADEMARK OFFICE

Commissioner for Patents
United States Patent and Trademark Office
P.O. Box 1450
Alexandria, VA 22313-1450
www.uspto.gov

TELIK, INC.
C/O FOLEY & LARDNER LLP
975 PAGE MILL ROAD
PALO ALTO CA 94304

MAILED

DEC 14 2011

OFFICE OF PETITIONS

In re Application of	:	
Betsy R. Hughes et al	:	DECISION REFUSING STATUS
Application No. 13/035,637	:	UNDER 37 CFR 1.47(a)
Filed: February 25, 2011	:	
Attorney Docket No. 056274-4052	:	

This is in response to the petition under 37 CFR 1.47(a), filed September 26, 2011.

The petition is dismissed.

Rule 47 applicant is given TWO MONTHS from the mailing date of this decision to reply, correcting the below-noted deficiencies. Any reply should be entitled "Request for Reconsideration of Petition Under 37 CFR 1.47(a)," and should only address the deficiencies noted below, except that the reply may include an oath or declaration executed by the non-signing inventor. **FAILURE TO RESPOND WILL RESULT IN ABANDONMENT OF THE APPLICATION.** Any extensions of time will be governed by 37 CFR 1.136(a).

A grantable petition under 37 CFR 1.47(a) requires: (1) proof that the non-signing inventor cannot be reached or refuses to sign the oath or declaration after having been presented with the application papers (specification, claims and drawings); (2) an acceptable oath or declaration in compliance with 35 U.S.C. §§ 115 and 116; (3) the petition fee; and (4) a statement of the last known address of the non-signing inventor. Applicant lacks items (1) and (4) set forth above.

As to item (1), rule 47 applicant **must** demonstrate with documented evidence that an inventor refuses to join in the application after having been presented with the application papers (specification, claims, drawings and oath or declaration). There is no indication herein that joint inventor Ramon Burns was presented with a copy of the complete application papers for this application.

The Office is in receipt of Exhibit A, however, the Office still needs proof that a copy of the application was sent to the nonsigning inventor. See MPEP 409.03(d)(ii) and In re Gray, 115 USPQ 80.

As to item (4), a statement of the inventor's last known address is missing and is required.

Further correspondence with respect to this matter should be delivered through one of the following mediums:

By mail:	Mail Stop PETITIONS Commissioner for Patents Post Office Box 1450 Alexandria, VA 22313-1450
By hand:	Customer Service Window Mail Stop Petitions Randolph Building 401 Dulany Street Alexandria, VA 22314
By fax:	(571) 273-8300 ATTN: Office of Petitions
By internet:	EFS-Web www.uspto.gov/ebc/efs_help.html (for help using EFS-Web call the Patent Electronic Business Center at (866) 217-9197)

Any questions concerning this matter may be directed to the undersigned at (571) 272-3208.

/KOC/
Karen Creasy
Petitions Examiner
Office of Petitions

UNITED STATES PATENT AND TRADEMARK OFFICE

Commissioner for Patents
United States Patent and Trademark Office
P.O. Box 1450
Alexandria, VA 22313-1450
www.uspto.gov

TELIK, INC.
C/O FOLEY & LARDNER LLP
975 PAGE MILL ROAD
PALO ALTO CA 94304

MAILED

JAN 17 2012

OFFICE OF PETITIONS

In re Application of	:	
Betsy r. Hughes et al	:	DECISION GRANTING STATUS
Application No. 13/035,637	:	UNDER 37 CFR 1.47(a)
Filed: February 25, 2011	:	
Attorney Docket No. 056274-4052	:	

This is in response to the renewed petition under 37 CFR 1.47(a), filed December 20, 2011.

The petition is **GRANTED.**

Petitioner has shown that the non-signing inventor has refused to join in the filing of the above-identified application.

The application and papers have been reviewed and found in compliance with 37 CFR 1.47(a). This application is hereby accorded Rule 1.47(a) status.

As provided in 37 CFR 1.47(c), this Office will forward notice of this application's filing to the non-signing inventor at the address given in the petition. Notice of the filing of this application will also be published in the Official Gazette.

This application is being referred to the Office of Patent Application Processing for pre-examination processing.

Telephone inquiries regarding this decision should be directed to the undersigned at (571) 272-3208.

/KOC/
Karen Creasy
Petitions Examiner
Office of Petitions

UNITED STATES PATENT AND TRADEMARK OFFICE

Commissioner for Patents
United States Patent and Trademark Office
P.O. Box 1450

MAILED
NOV 08 2011
OFFICE OF PETITIONS

Riverside Law LLP
300 Four Falls Corporate Center, Suite 710
300 Conshohocken State Road
West Conshohocken PA 19428

In re Application of :
Antony KOBLISH et al. : ON PETITION
Application No. 13/035,650 :
Filed: February 25, 2011 :
Atty. Docket No.: 204204-0004-00-US.600744

This is in response to the petition filed October 10, 2011, captioned as a "Petition under 37 CFR 1.47(a)(b)", which is being treated under 37 CFR 1.47(a).

The petition is **DISMISSED.**

Rule 47 applicant is given TWO (2) MONTHS from the mailing date of this decision to reply, correcting the below-noted deficiencies. Any reply should be entitled "Request for Reconsideration of Petition Under 37 CFR 1.47(a)," and should only address the deficiencies noted below, except that the reply may include an oath or declaration executed by the non-signing inventor. **FAILURE TO RESPOND WILL RESULT IN ABANDONMENT OF THE APPLICATION.** Any extensions of time will be governed by 37 CFR 1.136(a).

A grantable petition under 37 CFR 1.47(a) requires:

(1) proof that the non-signing inventor cannot be reached or refuses to sign the oath or declaration after having been presented with the application papers (specification, claims, and drawings);
(2) an acceptable oath or declaration in compliance with 35 U.S.C. §§115 and 116;
(3) the petition fee; and
(4) a statement of the last known address of the non-signing inventor.

The instant petition lacks item (1).

Item (1) requires that a "diligent effort" has been expended in attempting to find or reach the non-signing inventor (35 U.S.C. § 116)(*see also*, MPEP 409.03(a)). The showing currently fails to demonstrate, with a documented showing, that a diligent effort was made to find or locate non-signing inventor Paul Tashjian. Notably, petitioner fails to

show that application papers, including a cover letter having a deadline, were mailed to the address of the nonsigning inventor. Whereas the declaration of Darryl Pratcher asserts that a signed return receipt was received, no evidence of this receipt was provided. Further, there is no indication that the non-signing inventor was given a deadline by which to reply. Lastly, there is no evidence the non-signing inventor was not available via online searching.

Additional evidence should include whether petitioner has access to the inventor's personnel record, and, if so, what does inspection of the record reveal as to a current address, forwarding address, or an address of the nearest living relative? What does inspection of the phone directories for those address locations reveal? If a forwarding address is provided, petitioner should then mail a complete copy of the application papers (specification, claims, drawings, oath, etc.) to the non-signing inventor's address, return receipts requested, along with a cover letter of instructions which includes a deadline. If the papers are returned and all other attempts to locate or reach the inventor, e.g., through personnel records, co-workers, E-mail, the Internet or the telephone, etc., continue to fail, then applicant will have established that the inventor cannot be reached after diligent effort. The statements of facts must be signed, where at possible, by a person having firsthand knowledge of the facts recited therein and should be accompanied by documentary evidence in support of the statement of facts. It is important that the forthcoming communication contain statements of fact as opposed to conclusions.

Where there is an express or oral refusal, that fact, along with the time and place of the refusal, must be stated in an affidavit or declaration by the party to whom the refusal was made. Where there is a written refusal, a copy of the document evidencing that refusal must be made part of the affidavit or declaration.

When it is concluded by the rule 47 application that an omitted inventor's conduct constitutes a refusal, all facts upon which that a conclusion is based should be stated in an affidavit or declaration. If there is documentary evidence to support facts alleged in the affidavit or declaration, such evidence must be submitted.

Whenever an omitted inventor gives a reason for refusing to sign the application oath or declaration, that reason should be stated in the affidavit or declaration.

In accordance with petitioner's instructions, the petition fee of $200 will be charged to petitioner's deposit account 50-5366.

Further correspondence with respect to this matter should be addressed as follows:

By Mail: Mail Stop PETITION
Commissioner for Patents
P. O. Box 1450
Alexandria, VA 22313-1450

By hand: U. S. Patent and Trademark Office

Application No. 13/035,650

Customer Service Window, Mail Stop Petitions
Randolph Building
401 Dulany Street
Alexandria, VA 22314

The centralized facsimile number is **(571) 273-8300.**

Telephone inquiries relating to this decision should be directed to Robert DeWitty, Petitions Attorney, Office of Petitions (571-272-8427).

for Anthony Knight
Director
Office of Petitions

UNITED STATES PATENT AND TRADEMARK OFFICE

Commissioner for Patents
United States Patent and Trademark Office
P.O. Box 1450

MAILED
FEB 22 2012
OFFICE OF PETITIONS

Riverside Law LLP
300 Four Falls Corporate Center, Suite 710
300 Conshohocken State Road
West Conshohocken PA 19428

In re Application of :
Antony KOBLISH et al. : ON PETITION
Application No. 13/035,650 :
Filed: February 25, 2011 :
Atty. Docket No.: 204204-0004-00-US.600744

This is in response to the renewed petition under 37 CFR 1.47(a) filed January 9, 2012.

The petition is **GRANTED.**

A grantable petition under 37 CFR 1.47(a) requires:

(1) proof that the non-signing inventor cannot be reached or refuses to sign the oath or declaration after having been presented with the application papers (specification, claims, and drawings);
(2) an acceptable oath or declaration in compliance with 35 U.S.C. §§115 and 116;
(3) the petition fee; and
(4) a statement of the last known address of the non-signing inventor.

Petitioner has shown that the non-signing inventor Paul Tashjian refuses to sign a proper oath or declaration after having been presented with the application papers. The application and papers have been received and found in compliance with 37 CFR 1.47(a). This application is hereby accorded Rule 47 status.

As provided in 37 CFR 1.47(c), this Office will forward notice of this application's filing to the non-signing inventor at the address given in that petition. Notice of the filing of this application will be published in the Official Gazette.

Application No. 13/035,650

Telephone inquiries relating to this decision should be directed to Robert DeWitty, Petitions Attorney, Office of Petitions (571-272-8427).

The application will be referred to Office of Patent Application Processing.

Ramesh Krishnamurthy
Petitions Examiner
Office of Petitions

UNITED STATES PATENT AND TRADEMARK OFFICE

Commissioner for Patents
United States Patent and Trademark Office
P.O. Box 1450

MAILED
FEB 22 2012
OFFICE OF PETITIONS

Paul Tashjian
1396 Nathan Hale Drive
Phoenixville, PA 19460

In re Application of
Anthony Koblish, Jeffrey G. Marx, Theodore D. Clineff, Stephen G. Gara, Troy Wilford, Paul Tashjian, Maarten Persenaire, Dean Entrekin, and Erik M. Erbe
Application No. 13/035,650
Filed: February 25, 2011
For: INSTRUMENT FOR USE IN BONE AND METHOD OF USE

Dear Mr. Tahsjian:

You are named as joint inventor in the above-identified United States patent application, filed under the provisions of 35 USC 116 (United States Code), and 37 CFR 1.47(a), Rules of Practice in Patent Cases. Should a patent be granted on the application, you will be designated therein as a joint inventor.

As a named inventor you are entitled to inspect any paper in the file wrapper of the application, order copies of all or any part thereof (at a prepaid cost per 37 CFR 1.19) or make your position of record in the application. Alternatively, you may arrange to do any of the preceding through a registered patent attorney or agent presenting written authorization from you. If you care to join the application, counsel of record (see below) would presumably assist you. Joining the application would entail the filing of an appropriate oath or declaration by you pursuant to 37 CFR 1.63.

Telephone inquiries regarding this communication should be directed to Robert DeWitty at (571) 272-8427. Requests for information regarding your application should be directed to the File Information Unit at (703) 308-2733. Information regarding how to pay for and order a copy of the application, or a specific paper in the application, should be directed to the Certification Division at (571) 272-3150 or 1 (800) 972-6382 (outside the Washington, DC area).

Ramesh Krishnamurthy
Petitions Examiner
Office of Petitions

cc: **Riverside Law LLP**
300 Four Falls Corporate Center, Suite 710
300 Conshohocken State Road
West Conshohocken PA 19428

PTO/SB/20PCT-KR (06-10)
Approved for use through 01/31/2012.
U.S. Patent and Trademark Office; U. S. DEPARTMENT OF COMMERCE
Under the Paperwork Reduction Act of 1995, no persons are required to respond to a collection of information unless it displays a valid OMB control number.

REQUEST FOR PARTICIPATION IN THE PATENT COOPERATION TREATY - PATENT PROSECUTION HIGHWAY (PCT-PPH) PILOT PROGRAM BETWEEN THE KOREAN INTELLECTUAL PROPERTY OFFICE (KIPO) AND THE USPTO

Application No:	13/035,656	Filing date:	02/25/2011
First Named Inventor:	Devesh Agarwal		
Title of the Invention:	SYSTEMS, METHODS, AND COMPUTER READABLE MEDIA FOR USING A SIGNALING MESSAGE ROUTING NODE TO PROVIDE BACKUP SUBSCRIBER INFORMATION MANAGEMENT SERVICE		

THIS REQUEST FOR PARTICIPATION IN THE PCT-PPH PILOT PROGRAM ALONG WITH THE REQUIRED DOCUMENTS MUST BE SUBMITTED VIA EFS-WEB. INFORMATION REGARDING EFS-WEB IS AVAILABLE AT HTTP://WWW.USPTO.GOV/EBC/EFS_HELP.HTML

APPLICANT HEREBY REQUESTS PARTICIPATION IN THE PCT-PPH PROGRAM AND PETITIONS TO MAKE THE ABOVE-IDENTIFIED APPLICATION SPECIAL UNDER THE PCT-PPH PROGRAM.

The above-identified application is (1) a national stage entry of the corresponding PCT application, or (2) a national stage entry of another PCT application which claims priority to the corresponding PCT application, or (3) a national application that claims domestic/ foreign priority to the corresponding PCT application, or (4) a national application which forms the basis for the priority claim in the corresponding PCT application, or (5) a continuing application of a U.S. application that satisfies one of (1) to (4) above, or (6) a U.S. application that claims domestic benefit to a U.S. provisional application which forms the basis for the priority claim in the corresponding PCT application.

The corresponding PCT application number(s) is/are: PCT/US2011/026307

The international filing date of the corresponding PCT application(s) is/are: 02/25/2011

I. List of Required Documents:

a. **A copy of the latest international work product (WO/ISA, WO/IPEA, or IPER) in the above–identified corresponding PCT application(s)**

☒ Is attached.
☐ Is not attached because the document is already in the U.S. application.

b. **A copy of all claims which were indicated as having novelty, inventive step and industrial applicability in the above-identified corresponding PCT application(s).**

☒ Is attached.
☐ Is not attached because the document is already in the U.S. application.

c. **English translations of the documents in a. and b. above are attached (if the documents are not in the English language). A statement that the English translation is accurate is attached for the document in b. above.**

d. **(1) An information disclosure statement listing the documents cited in the international work products (ISR, WO/ISA, WO/IPEA, IPER) of the corresponding PCT application.**

☒ Is attached.
☐ Has already been filed in the above-identified U.S. application on _____

(2) Copies of all documents (except) for U.S. patents or U.S. patent application publications)

☒ Are attached.
☐ Have already been filed in the above-identified U.S. application on _____

This collection of information is required by 35 U.S.C. 119, 37 CFR 1.55, and 37 CFR 1.102(d). The information is required to obtain or retain a benefit by the public, which is to file (and by the USPTO to process) an application. Confidentiality is governed by 35 U.S.C. 122 and 37 CFR 1.11 and 1.14. This collection is estimated to take 2 hours to complete, including gathering, preparing, and submitting the completed application form to the USPTO. Time will vary depending upon the individual case. Any comments on the amount of time you require to complete this form and/or suggestions for reducing this burden should be sent to the Chief Information Officer, U.S. Patent and Trademark Office, U.S. Department of Commerce, P.O. Box 1450, Alexandria, VA 22313-1450. DO NOT SEND FEES OR COMPLETED FORMS TO THIS ADDRESS.

Under the Paperwork Reduction Act of 1995, no persons are required to respond to a collection of information unless it displays a valid OMB control number.

REQUEST FOR PARTICIPATION IN THE PCT-PPH PILOT PROGRAM BETWEEN THE KIPO AND THE USPTO

(continued)

Application No.:	13/035,656
First Named Inventor:	Devesh Agarwal

II. Claims Correspondence Table:

Claims in US Application	Patentable Claims in the corresponding PCT Application	Explanation regarding the correspondence
1-37	1-37	Exactly the same

III. All the claims in the US application sufficiently correspond to the patentable claims in the corresponding PCT application.

Signature		Date	December 12, 2011
Name (Printed/Typed)	Gregory A. Hunt	Registration Number	41,085

CLAIMS

What is claimed is:

1. A method for using a signaling message routing node to provide backup subscriber information management service, the method comprising:

obtaining, by a signaling message routing node, information associated with a subscriber;

receiving, at the signaling message routing node, a first subscriber information management message including a message destination and being associated with the subscriber;

determining whether the message destination is operable to process the first subscriber information management message;

in response to determining that the message destination is operable to process the first subscriber information management message, routing the first subscriber information message to the message destination; and

in response to determining that the message destination is not operable to process the first subscriber information management message, responding to the first subscriber information management message on behalf of the message destination.

2. The method of claim 1 wherein obtaining the information associated with the subscriber comprises:

receiving, at the signaling message routing node, a second subscriber information management message containing the information associated with the subscriber;

extracting the information associated with the subscriber from the second subscriber information management message; and

storing the extracted information associated with the subscriber at the signaling message routing node or at a node that is separate from the signaling message routing node and the message destination.

3. The method of claim 1 wherein the signaling message routing node comprises one of:

a signal transfer point (STP);
a signaling gateway (SG);
an edge router;
a session initiation protocol (SIP) signaling router (SSR);
a DIAMETER signaling router (DSR);
an Internet protocol (IP) router; and
an IP multimedia subsystem (IMS) router.

4. The method of claim 2 wherein the first and second subscriber information management messages each comprise one of:
a mobile application part (MAP) protocol message; and
a Diameter protocol message.

5. The method of claim 1 wherein the information associated with the subscriber comprises information identifying the subscriber.

6. The method of claim 5 wherein the information identifying the subscriber comprises at least one of:
an international mobile subscriber identity (IMSI); and
a mobile station integrated services digital network (MSISDN) number.

7. The method of claim 1 wherein the information associated with the subscriber comprises information identifying the network node that currently serves the subscriber.

8. The method of claim 7 wherein the information identifying the network node that currently serves the subscriber comprises at least one of:
a point code of the network node;
an Internet protocol address of the network node; and
a Diameter identity of the network node.

9. The method of claim 7 wherein the network node that currently serves the subscriber comprises at least one of:
a mobile switching center (MSC);
a mobile switching center server (MSCS);
a short message service center (SMSC); and
a serving call session control function (S-CSCF).

10. The method of claim 1 wherein the message destination comprises at least one of:

a home location register (HLR); and

a home subscriber server (HSS).

11. The method of claim 1 wherein determining whether the message destination is operable to process the first subscriber information management message comprises at least one of:

using at least one of a physical level protocol, a link level protocol, a network level protocol, an application level protocol, and a high availability protocol to determine whether the message destination node is operable to process the first subscriber information management message; and

receiving notification from an entity other than the signaling message routing node indicating that the message destination is or is not operable to process the subscriber information management message.

12. The method of claim 1 wherein the first subscriber information management message comprises a request for location information for the subscriber.

13. The method of claim 12 wherein the request for location information comprises one of:

a send routing information (SRI) message;

a send routing information for short message (SRI_SM) message;

a location request (LOC_REQ) message; and

a Diameter location information request.

14. The method of claim 12 wherein responding to the first subscriber information management message on behalf of the message destination comprises providing the location information for the subscriber.

15. The method of claim 2 wherein the second subscriber information management message comprises a request to update location information for the subscriber.

16. The method of claim 15 wherein the request to update location information for the subscriber comprises one of:

an update location (UpdateLoc) message;

a registration message; and

a Diameter update location request (ULR).

17. The method of claim 1 wherein responding to the first subscriber information management message on behalf of the message destination node comprises at least one of:

responding to a request for location update with an answer indicating that the location update is allowed; and

responding to a request for profile information by providing user profile information to the requesting entity.

18. The method of claim 1 wherein the first subscriber information management message comprises a Diameter message sent over a Cx, S6a, S6b, or Sp interface.

19. A system for using a signaling message routing node to provide backup mobility management service, the system comprising:

a signaling message routing node, the signaling message routing node including:

a communications module for receiving a first mobility management message having a message destination and being associated with a subscriber; and

a subscriber information management module for obtaining information associated with the subscriber, for determining whether the message destination is operable to process the first subscriber information management message, for, in response to determining that the message destination is operable to process the first subscriber information management message, routing the first subscriber information management message to the message destination, and, in response to determining that the message destination is not operable to process the first subscriber information management message, responding to the first subscriber information management message on behalf of the message destination.

20. The system of claim 19 wherein obtaining the information associated with the subscriber comprises:

receiving, at the routing node, a second subscriber information management message containing the information associated with the subscriber;

extracting the information associated with the subscriber from the second subscriber information management message; and

storing the extracted information associated with the subscriber at the signaling message routing node or at a node that is separate from the signaling message routing node and the message destination.

21. The system of claim 19 wherein the signaling message routing node comprises one of:

a signal transfer point (STP);

a signaling gateway (SG);

an edge router;

a session initiation protocol (SIP) signaling router (SSR);

a Diameter signaling router (DSR);

an Internet protocol (IP) router; and

an IP multimedia subsystem (IMS) router.

22. The system of claim 20 wherein the first and second subscriber information management messages each comprise one of:

a mobile application part (MAP) protocol message; and

a Diameter protocol message.

23. The system of claim 19 wherein the information associated with the subscriber comprises information identifying the subscriber.

24. The system of claim 23 wherein the information identifying the subscriber comprises at least one of:

an international mobile subscriber identity (IMSI) of the subscriber; and

a mobile station integrated services digital network (MSISDN) number of the subscriber.

25. The system of claim 19 wherein the information associated with the subscriber comprises information identifying the network node that currently serves the subscriber.

26. The system of claim 25 wherein the information identifying the network node that currently serves the subscriber comprises at least one of:

a point code of the network node;

an Internet protocol address of the network node; and

a Diameter identity of the network node.

27. The system of claim 24 wherein the network node that currently serves the subscriber comprises at least one of:

a mobile switching center (MSC);

a mobile switching center server (MSCS);

a short message service center (SMSC); and

a serving call session control function (S-CSCF).

28. The system of claim 19 wherein the message destination comprises at least one of:

a home location register (HLR); and

a home subscriber server (HSS).

29. The system of claim 19 wherein determining whether the message destination is operable to process the first subscriber information management message comprises at least one of:

using at least one of a physical level protocol, a link level protocol, a network level protocol, an application level protocol, and a high availability protocol to determine whether the message destination is operable to process the first subscriber information management message; and

receiving notification from an entity other than the signaling message routing node indicating that the message destination is or is not operable to process the first subscriber information management message.

30. The system of claim 19 wherein the first subscriber information management message comprises a request for location information for the subscriber.

31. The system of claim 30 wherein the request for location information comprises one of:

a send routing information (SRI) message;

a send routing information for short message (SRI_SM) message;

a location request (LOC_REQ) message; and

a Diameter location information request (LIR) message.

32. The system of claim 30 wherein responding to the first subscriber information management message on behalf of the message destination comprises providing the location information for the subscriber.

33. The system of claim 19 wherein the first subscriber information management message comprises a request to update location information for the subscriber.

34. The system of claim 33 wherein the request to update location information for the subscriber comprises one of:

an update location (UpdateLoc) message;

a registration message; and

a Diameter update location request.

35. The system of claim 19 wherein responding to the first subscriber information management message on behalf of the message destination comprises at least one of:

responding to a request for location update with an answer indicating that the location update is allowed; and

responding to a request for profile information by providing user profile information to the requesting entity.

36. The system of claim 19 wherein the first subscriber information management message comprises a Diameter message sent over a Cx, S6a, S6b, or Sp interface.

37. A computer readable medium having stored thereon executable instructions that when executed by the processor of a computer control the computer to perform steps comprising:

obtaining, by a signaling message routing node, information associated with a subscriber;

receiving, at the signaling message routing node, a first subscriber information management message including a message destination and being associated with the subscriber;

determining whether the message destination is operable to process the first subscriber information management message;

in response to determining that the message destination is operable to process the first subscriber information management message, routing the first subscriber information message to the message destination; and

in response to determining that the message destination is not operable to process the first subscriber information management message, responding to the first subscriber information management message on behalf of the message destination.

UNITED STATES PATENT AND TRADEMARK OFFICE

Commissioner for Patents
United States Patent and Trademark Office
P.O. Box 1450
Alexandria, VA 22313-1450
www.uspto.gov

JENKINS, WILSON, TAYLOR & HUNT, P. A.
3100 TOWER BLVD.
SUITE 1200
DURHAM NC 27707

MAILED
FEB 28 2012
OFFICE OF PETITIONS

In re Application of	: DECISION ON REQUEST TO
Devesh AGARWAL et al.	: PARTICIPATE IN THE PATENT
Application No.: 13/035,656	: PROSECUTION HIGHWAY
Filed: February 25, 2011	: PROGRAM AND PETITION
Attorney Docket No.: 1322/398/2	: TO MAKE SPECIAL UNDER
	: 37 CFR 1.102(a)

This is a decision on the request to participate in the PCT Patent Prosecution Highway (PCT-PPH) pilot program and the petition under 37 CFR 1.102(a), filed on December 12, 2011 to make the above-identified application special.

The request and petition are **GRANTED**.

Discussion

A grantable request to participate in the PCT-PPH pilot program and petition to make special require:

(1) The U.S. application must have an eligible relationship to one or more PCT applications where the ISA or IPEA are Australia, Austria, China, EPO, Finland, JPO, Korea, Nordic Patent Institute, Russia, Spain, Sweden, or USPTO;

(2) At least one claim in the PCT application has novelty, inventive step, and industrial applicability and must be free of any observations in Box VIII in the latest work product in the international stage or applicant must identify and explain why the claim(s) is/are not subject to the observation in Box VIII;

(3) Applicant must submit a copy of the claim(s) from the PCT application(s) that have novelty, inventive step, and industrial applicability along with an English translation thereof and a statement that the English translation is accurate, if the claims are not in the English language;

(4) All the claims in the U.S. application must sufficiently correspond or be amended to sufficiently correspond to the claim(s) that have novelty, inventive step, and industrial applicability in the PCT application(s);

(5) Examination of the U.S. application has not begun;

(6) Applicant must submit a copy of the latest international work product from the PCT application indicating that the claim(s) have novelty, inventive step, and industrial applicability along with an English translation thereof and a statement that the English translation is accurate if the latest international work product is not in the English language;

(7) Applicant must submit an IDS listing the documents cited by the PCT examiner in the international work product along with copies of documents except U.S. patents or U.S. patent application publications.

The request to participate in the PCT-PPH pilot program and petition comply with the above requirements. Accordingly, the above-identified application has been accorded "special" status.

Telephone inquiries concerning this decision should be directed to Michelle R. Eason at 571-272-4231.

All other inquiries concerning the examination or status of the application is accessible in the PAIR system at http://www.uspto.gov/ebc.index.html.

This application will be forwarded to the examiner for action on the merits commensurate with this decision.

Thurman K. Page
Petitions Examiner
Office of Petitions

UNITED STATES PATENT AND TRADEMARK OFFICE

Commissioner for Patents
United States Patent and Trademark Office
P.O. Box 1450
Alexandria, VA 22313-1450
www.uspto.gov

MAILED
APR 12 2011
OFFICE OF PETITIONS

LEYDIG VOIT & MAYER, LTD
TWO PRUDENTIAL PLAZA, SUITE 4900
180 NORTH STETSON AVENUE
CHICAGO IL 60601-6731

In re Application of	:	
Leroy G. Hagenbuch	:	
Application No. 13/035,678	:	DECISION ON PETITION
Filed: February 25, 2011	:	TO MAKE SPECIAL UNDER
Attorney Docket No. **706992**	:	37 CFR 1.102(c)(1)
	:	

This is a decision on the petition under 37 CFR 1.102(c)(1), filed February 25, 2011, to make the above-identified application special based on applicant's age as set forth in MPEP § 708.02, Section IV.

The petition is **GRANTED**.

A grantable petition to make an application special under 37 CFR 1.102(c)(1) and MPEP § 708.02, Section IV: Applicant's Age must be accompanied by evidence showing that at least one of the applicants is 65 years of age, or more, such as a birth certificate or a statement by applicant. No fee is required

The instant petition includes a statement by a registered attorney. Accordingly, the above-identified application has been accorded "special" status.

Telephone inquiries concerning this decision should be directed to JoAnne Burke at 571-272-4584.

All other inquiries concerning either the examination or status of the application should be directed to the Technology Center.

The application is being forwarded to the Technology Center Art Unit 3661 for action on the merits commensurate with this decision.

/JoAnne Burke/
JoAnne Burke
Petitions Examiner
Office of Petitions

UNITED STATES PATENT AND TRADEMARK OFFICE

Commissioner for Patents
United States Patent and Trademark Office
P.O. Box 1450
Alexandria, VA 22313-1450
www.uspto.gov

KNOBBE MARTENS OLSON & BEAR LLP
2040 MAIN STREET
FOURTEENTH FLOOR
IRVINE CA 92614

MAILED
JUN 07 2011
OFFICE OF PETITIONS

In re Application of	:	
David E. Hargis, et al.	:	
Application No. 13/035,727	:	NOTICE
Filed: February 25, 2011	:	
Attorney Docket No. MELLES.014D1	:	

This is a notice regarding your request for acceptance of a fee deficiency submission under 37 CFR 1.28.

The Office no longer investigates or rejects original or reissue applications under 37 CFR 1.56. **1098 Off. Gaz. Pat. Office 502 (January 3, 1989)**. Therefore, nothing in this Notice is intended to imply that an investigation was done.

Your fee deficiency submission under 37 CFR 1.28 is hereby **ACCEPTED**.

This application is no longer entitled to small entity status. Accordingly, all future fees paid in this application must be paid at the large entity rate.

Inquiries related to this communication should be directed to the undersigned at (571) 272-2991.

/Terri Johnson/
Terri Johnson
Petitions Examiner
Office of Petitions

UNITED STATES PATENT AND TRADEMARK OFFICE

Commissioner for Patents
United States Patent and Trademark Office
P.O. Box 1450
Alexandria, VA 22313-1450
www.uspto.gov

Decision Date : February 13, 2012

In re Application of :

Alexander Mittal

Application No : 13035888

Filed : 25-Feb-2011

Attorney Docket No : INND-003/01US 314287-2021

DECISION ON REQUEST TO WITHDRAW AS ATTORNEY/AGENTOF RECORD

This is an electronic decision on the Request to Withdraw as attorney or agent of record under 37 CFR § 1.36(b), filed February 13, 2012

The request is **APPROVED.**

The request was signed by William S. Galliani (registration no. 33885) on behalf of all attorneys/agents associated with Customer Number 58249 . All attorneys/agents associated with Cusotmer Number 58249 have been withdrawn.

Since there are no remaining attorneys of record, all future communications from the Office will be directed to the first named inventor or assignee that has properly made itself of record pursuant to 37 CFR 3.71, with correspondence address:

Name	Innova Dynamics, Inc.
Name2	
Address 1	1700 Owens St., Suite 240
Address 2	
City	San Francisco
State	CA
Postal Code	94158
Country	US

As a reminder, requester is required to inform the first named inventor or assignee that has properly made itself of record pursuant to 37 CFR 3.71 of the electronically processed petition.

Telephone inquiries concerning this decision should be directed to the Patent Electronic Business Center (EBC) at 866-217-9197.

Office of Petitions

Doc Code: PET.AUTO **Document Description: Petition automatically granted by EFS-Web**	PTO/SB/83 U.S. Patent and Trademark Office Department of Commerce

Electronic Petition Request	**REQUEST FOR WITHDRAWAL AS ATTORNEY OR AGENT AND CHANGE OF CORRESPONDENCE ADDRESS**
Application Number	13035888
Filing Date	25-Feb-2011
First Named Inventor	Alexander Mittal
Art Unit	1787
Examiner Name	CHENG YUAN HUANG
Attorney Docket Number	INND-003/01US 314287-2021
Title	STRUCTURES WITH SURFACE-EMBEDDED ADDITIVES AND RELATED MANUFACTURING METHODS

◉ Please withdraw me as attorney or agent for the above identified patent application and the practitioners of record associated with Customer Number: 58249

The reason(s) for this request are those described in 37 CFR:

10.40(b)(4)

Certifications

☒ I/We have given reasonable notice to the client, prior to the expiration of the response period, that the practitioner(s) intend to withdraw from employment

☒ I/We have delivered to the client or a duly authorized representative of the client all papers and property (including funds) to which the client is entitled

☒ I/We have notified the client of any responses that may be due and the time frame within which the client must respond

Change the correspondence address and direct all future correspondence to the first named inventor or assignee that has properly made itself of record pursuant to 37 CFR 3.71:

Name	Innova Dynamics, Inc.
Address	1700 Owens St., Suite 240
City	San Francisco
State	CA
Postal Code	94158
Country	US

I am authorized to sign on behalf of myself and all withdrawing practitioners.	
Signature	/William S. Galliani/
Name	William S. Galliani
Registration Number	33885

UNITED STATES PATENT AND TRADEMARK OFFICE

Commissioner for Patents
United States Patent and Trademark Office
P.O. Box 1450
Alexandria, VA 22313-1450
www.uspto.gov

PRADIP K. SAHU
3123 W. HOLDEN CIRCLE
MATTESON IL 60443

MAILED
APR 21 2011
OFFICE OF PETITIONS

In re Application of
Sahu et al.
Application No. 13/035,970
Filed: February 27, 2011
Attorney Docket No. SAHU1

ON PETITION

This is a decision on the petition under 37 CFR 1.102(c)(1), filed March 6, 2011, to make the above-identified application special based on applicant's age as set forth in M.P.E.P. § 708.02, Section IV.

The petition is **GRANTED**.

A grantable petition to make an application special under 37 CFR 1.102(c)(1) and MPEP § 708.02, Section IV: Applicant's Age must be accompanied by evidence showing that at least one of the applicants is 65 years of age, or more, such as a birth certificate or a statement by applicant. No fee is required

The instant petition includes a statement (PTO/SB/130 form) by the applicant's attorney that applicant is 65 years of age. Accordingly, the above-identified application has been accorded "special" status.

Telephone inquiries concerning this decision should be directed to the undersigned at 571-272-7751. All other inquiries concerning either the examination or status of the application should be directed to the Technology Center.

This matter is being referred to the Technology Center Art Unit 3742 for action on the merits commensurate with this decision.

/Joan Olszewski/
Joan Olszewski
Petitions Examiner
Office of Petitions

UNITED STATES PATENT AND TRADEMARK OFFICE

Commissioner for Patents
United States Patent and Trademark Office
P.O. Box 1450
Alexandria, VA 22313-1450
www.uspto.gov

BRACEWELL & GIULIANI LLP
P.O. BOX 61389
HOUSTON TX 77208-1389

MAILED
JUN 23 2011
OFFICE OF PETITIONS

In re Application of
Trent Sorbe
Application No. 13/036,076
Filed: February 28, 2011
Attorney Docket No. 058052.04.12A

: DECISION REFUSING STATUS
: UNDER 37 CFR 1.47(b)

This decision is in response to the petition filed June 14, 2011under 37 CFR 1.47(a), in response to the Notice to File Missing Parts "Notice" mailed March 14, 2011, which is treated under 37 CFR 1.47(b).

The above-identified application, naming Aaron Joseph Green as the sole inventor, was filed on May 12, 2005 without an executed oath or declaration. Accordingly, on June 24, 2005 , a "Notice To File Missing Parts of Nonprovisional Application" was mailed, requiring, an executed oath or declaration and a surcharge for its late filing. In response, the present petition was filed with a one month extension of time request.

At the outset, the petition names only one inventor, Trent Sorbe, who, according to the petition, has not executed the oath or declaration. Petitioner is advised that if none of the named inventor(s) will sign the oath or declaration, a petition under 37 CFR 1.47(b) must be filed. If some of the named inventors signed the oath or declaration and one or more of the named inventors have not signed the declaration, a petition under 37 CFR 1.47(a) must be filed. Accordingly, this petition will be treated under 37 CFR 1.47(b).

A grantable petition under 37 CFR 1.47(b) requires:

(1) proof that the non-signing inventor cannot be reached or refuses to sign the oath or declaration after having been presented with the application papers (specification, claims and drawings);

(2) an acceptable oath or declaration in compliance with 35 U.S.C. §§ 115 and 116;

(3) the petition fee;

(4) a statement of the last known address of the non-signing inventor;

(5) proof of proprietary interest, and

(6) proof of irreparable damage.

The petition lacks items (2), (5) and (6).

As to item (2), an oath or declaration for the patent application in compliance with 37 CFR 1.63 and 1.64 has not been presented. The declaration filed with the petition is blank in that it isn't executed by either the inventor or an assignee. Therefore, a declaration in compliance with 37 CFR 1.63, 1.64, and 1.67 must be presented, signed by all of the signing inventors, if any. If no inventor(s) will sign the declaration, the declaration may be signed on behalf of the inventor by an assignee or the oath or declaration must be signed by an officer of the corporation (president, vice president, secretary, or treasurer) on behalf of and as agent for the non-signing inventor(s). The officer must identify his/her title in the declaration, as well as his/her mailing address, residence, if the applicant lives at a different location from where he or she customarily receives mail, as well as the citizenship of individual signing on behalf of the non-signing inventor. If the oath or declaration is not signed by an officer of the corporation, then proof of authority of the person signing on behalf of the corporation must be submitted.[1]

In regards to item (5), petitioner must provide proof that the Rule 1.47(b) applicant has sufficient proprietary interest in the subject matter to justify the filing of the application.[2] Petitioners should provide a copy of the employment agreement between the non-signing inventors and the Rule 1.47(b) applicant (company); a copy of an assignment agreement showing that the invention disclosed in the application is assigned to the Rule 1.47(b) applicant; or a legal memorandum signed by an attorney familiar with the law of the jurisdiction stating that a court of competent jurisdiction would by the weight of authority in that jurisdiction award the title of the invention to the Rule 1.47(b) applicant.

There is neither an employment agreement, an assignment or a legal memorandum included with the evidence presented.

The assignment hasn't been executed and the Agreement on Ideas, Inventions and Confidential Information is an agreement to assign. The records from the Assignment Division showing Mr. Trent Sorbe's recorded assignments to Applicant as evidence of his employment duties, attached as Exhibit G is not proof of an assignment in the instant matter. The Declaration of Jay Yates, is not sufficient evidence of proprietary interest. Finally, the profile on LinkedIn and various press releases regarding Trent Sorbe are not sufficient under the rule to show the applicant has proprietary interest in this matter.

In regards to item (6), petitioner must provide proof of irreparable damages in accordance with MPEP 409.03(g).

---

[1]MPEP 409.03(b).

[2]MPEP 409.03(f).

Further correspondence with respect to this matter should be addressed as follows:

By mail: Mail Stop Petition
Commissioner for Patents
P.O. Box 1450
Alexandria, VA 22313-1450

By FAX: (571) 273-8300

Telephone inquiries concerning this matter may be directed to the undersigned Petitions Attorney at (571) 272-3212.

Patricia Faison-Ball

Patricia Faison-Ball
Senior Petitions Attorney
Office of Petitions

UNITED STATES PATENT AND TRADEMARK OFFICE

Commissioner for Patents
United States Patent and Trademark Office
P.O. Box 1450
Alexandria, VA 22313-1450
www.uspto.gov

BRACEWELL & GIULIANI LLP
P.O. BOX 61389
HOUSTON TX 77208-1389

MAILED
JUL 15 2011
OFFICE OF PETITIONS

In re Application of
Trent Sorbe
Application No. 13/036,076
Filed: February 28, 2011
Attorney Docket No. 058052.04.12A

: DECISION REFUSING STATUS
: UNDER 37 CFR 1.47(b)

This decision is in response to the SUPPLEMENTAL PETITION UNDER 37 C.F.R. 1.47(a) filed June 28, 2011, which is being treated under 37 CFR 1.47(b)[1].

The petition is **DISMISSED**.

Rule 47 applicant is given TWO MONTHS from the mailing date of this decision to respond, correcting the below-noted deficiencies. Any response should be entitled "Request for Reconsideration of Petition Under 37 CFR 1.47(b)" and may include an oath or declaration executed by the inventor. **Failure to respond will result in abandonment of the application.** Any extensions of time will be governed by 37 CFR 1.136(a).

The above-identified application, naming Trent Sorbe as the sole inventor, was filed on February 28, 2011 without an executed oath or declaration. Accordingly, on March 14, 2011, a "Notice To File Missing Parts of Nonprovisional Application" was mailed, requiring, an executed oath or declaration and a surcharge for its late filing. In response, a petition under 37 CFR 1.47(a) was filed June 14, 2011 with a one month extension of time request. As the petition names only one inventor, Trent Sorbe, who has not executed the oath or declaration, petitioner was advised that if none of the named inventor(s) will sign the oath or declaration, a petition under 37 CFR 1.47(b) must be filed. If some of the named inventors signed the oath or declaration and one or more of the named inventors have not signed the declaration, a petition under 37 CFR 1.47(a) must be filed. Accordingly, this petition is being treated under 37 CFR 1.47(b).

---

[1]A grantable petition under 37 CFR 1.47(b) requires:
(1) proof that the non-signing inventor cannot be reached or refuses to sign the oath or declaration after having been presented with the application papers (specification, claims and drawings);
(2) an acceptable oath or declaration in compliance with 35 U.S.C. §§ 115 and 116;
(3) the petition fee;
(4) a statement of the last known address of the non-signing inventor;
(5) proof of proprietary interest, and
(6) proof of irreparable damage.

The petition was dismissed in a decision mailed June 23, 2011 as the petition lacked compliance with items (2), (5) and (6) under the rule.

Comes now petitioner with the instant request for reconsideration with proof of proprietary interest and proof of irreparable damage.

The request for reconsideration however, is still not in compliance with item (2). An executed oath or declaration for the patent application in compliance with 37 CFR 1.63 and 1.64 has not been presented executed by either the inventor or an assignee. Therefore, a declaration in compliance with 37 CFR 1.63, 1.64, and 1.67 must be presented, signed by all of the signing inventors, if any. If no inventor(s) will sign the declaration, the declaration may be signed on behalf of the inventor by an assignee or the oath or declaration must be signed by an officer of the corporation (president, vice president, secretary, or treasurer) on behalf of and as agent for the non-signing inventor(s). The officer must identify his/her title in the declaration, as well as his/her mailing address, residence, if the applicant lives at a different location from where he or she customarily receives mail, as well as the citizenship of individual signing on behalf of the non-signing inventor. If the oath or declaration is not signed by an officer of the corporation, then proof of authority of the person signing on behalf of the corporation must be submitted.[2]

Further correspondence with respect to this matter should be addressed as follows:

By mail: Mail Stop Petition
Commissioner for Patents
P.O. Box 1450
Alexandria, VA 22313-1450

By FAX: (571) 273-8300

Telephone inquiries concerning this matter may be directed to the undersigned Petitions Attorney at (571) 272-3212.

Patricia Faison-Ball

Patricia Faison-Ball
Senior Petitions Attorney
Office of Petitions

[2]MPEP 409.03(b).

UNITED STATES PATENT AND TRADEMARK OFFICE

Commissioner for Patents
United States Patent and Trademark Office
P.O. Box 1450
Alexandria, VA 22313-1450
www.uspto.gov

BRACEWELL & GIULIANI LLP
P.O. BOX 61389
HOUSTON TX 77208-1389

MAILED

AUG 23 2011

OFFICE OF PETITIONS

In re Application of
Trent Sorbe
Application No. 13/036,076
Filed: February 28, 2011
Attorney Docket No. 058052.04.12A

: DECISION REFUSING STATUS
: UNDER 37 CFR 1.47(b)

This decision is in response to the "PETITION UNDER 37 C.F.R. 1.47(b) and REQUEST FOR RECONSIDERATION OF REFUSAL DATED JUNE 23, 2011" filed July 14, 2011.[1]

The petition is **DISMISSED**.

Rule 47 applicant is given TWO MONTHS from the mailing date of this decision to respond, correcting the below-noted deficiencies. Any response should be entitled "Request for Reconsideration of Petition Under 37 CFR 1.47(b)" and may include an oath or declaration executed by the inventor. **Failure to respond will result in abandonment of the application.** Any extensions of time will be governed by 37 CFR 1.136(a).

The above-identified application, naming Trent Sorbe as the sole inventor, was filed on February 28, 2011 without an executed oath or declaration. Accordingly, on March 14, 2011, a "Notice To File Missing Parts of Nonprovisional Application" was mailed, requiring, an executed oath or declaration and a surcharge for its late filing. In response, a petition under 37 CFR 1.47(a) was filed June 14, 2011 with a one month extension of time request. As the petition names only one inventor, Trent Sorbe, who has not executed the oath or declaration, petitioner was advised that if none of the named inventor(s) will sign the oath or declaration, a petition under 37 CFR 1.47(b) must be filed. If some of the named inventors signed the oath or declaration and one or more of the named inventors have not signed the declaration, a petition under 37 CFR 1.47(a) must be filed. Accordingly, this petition is being treated under 37 CFR 1.47(b).

The petition was dismissed in a decision mailed June 23, 2011 as the petition lacked

---

[1] A grantable petition under 37 CFR 1.47(b) requires:
(1) proof that the non-signing inventor cannot be reached or refuses to sign the oath or declaration after having been presented with the application papers (specification, claims and drawings);
(2) an acceptable oath or declaration in compliance with 35 U.S.C. §§ 115 and 116;
(3) the petition fee;
(4) a statement of the last known address of the non-signing inventor;
(5) proof of proprietary interest, and
(6) proof of irreparable damage.

compliance with items (2), (5) and (6) under the rule. In a petition filed June 28, 2011, the requirements for proof of proprietary interest and proof of irreparable damage were satisfied and a decision mailed July 15, 2011 advised that the remaining requirement for an executed oath or declaration for the patent application in compliance with 37 CFR 1.63 and 1.64 had not been presented executed by either the inventor or an assignee.

The instant petition is still not in compliance with item (2). An executed oath or declaration for the patent application in compliance with 37 CFR 1.63 and 1.64 has not been presented executed by either the inventor or an assignee. Therefore, a declaration in compliance with 37 CFR 1.63, 1.64, and 1.67 must be presented, signed by all of the signing inventors, if any. If no inventor(s) will sign the declaration, the declaration may be signed on behalf of the inventor by an assignee or the oath or declaration must be signed by an officer of the corporation (president, vice president, secretary, or treasurer) on behalf of and as agent for the non-signing inventor(s). The officer must identify his/her title in the declaration, as well as his/her mailing address, residence, if the applicant lives at a different location from where he or she customarily receives mail, as well as the citizenship of individual signing on behalf of the non-signing inventor. If the oath or declaration is not signed by an officer of the corporation, then proof of authority of the person signing on behalf of the corporation must be submitted.[2]

While a signed statement by John Hagy has been submitted, a signed OATH/DECLARATION has not been submitted. The OATH/DECLARATION can not be left blank.

Status under 37 CFR 1.47(b) cannot be accorded this application until such time as the deficiencies have been cured.

Further correspondence with respect to this matter should be addressed as follows:

By mail: Mail Stop Petition
Commissioner for Patents
P.O. Box 1450
Alexandria, VA 22313-1450

By FAX: (571) 273-8300

Telephone inquiries concerning this matter may be directed to the undersigned Petitions Attorney at (571) 272-3212.

Patricia Faison-Ball

Patricia Faison-Ball
Senior Petitions Attorney
Office of Petitions

---

[2]MPEP 409.03(b).

UNITED STATES PATENT AND TRADEMARK OFFICE

Commissioner for Patents
United States Patent and Trademark Office
P.O. Box 1450
Alexandria, VA 22313-1450
www.uspto.gov

MAILED
SEP 16 2011
OFFICE OF PETITIONS

BRACEWELL & GIULIANI LLP
P.O. BOX 61389
HOUSTON TX 77208-1389

In re Application of
Trent Sorbe
Application No. 13/036,076
Filed: February 28, 2011
Attorney Docket No. 058052.04.12A

: DECISION ACCORDING STATUS
: UNDER 37 CFR 1.47(b)

This decision is in response to the "PETITION UNDER 37 C.F.R. 1.47(b) and REQUEST FOR RECONSIDERATION OF REFUSAL DATED AUGUST 23, 2011" filed September 14, 2011.[1]

The petition is **GRANTED**.

The above-identified application, naming Trent Sorbe as the sole inventor, was filed on February 28, 2011 without an executed oath or declaration. Accordingly, on March 14, 2011, a "Notice To File Missing Parts of Nonprovisional Application" was mailed, requiring, an executed oath or declaration and a surcharge for its late filing. In response, a petition under 37 CFR 1.47(a) was filed June 14, 2011 with a one month extension of time request. As the petition names only one inventor, Trent Sorbe, who has not executed the oath or declaration, petitioner was advised that if none of the named inventor(s) will sign the oath or declaration, a petition under 37 CFR 1.47(b) must be filed. If some of the named inventors signed the oath or declaration and one or more of the named inventors have not signed the declaration, a petition under 37 CFR 1.47(a) must be filed. Accordingly, this petition is being treated under 37 CFR 1.47(b).

The petition was dismissed in a decision mailed June 23, 2011 as the petition lacked compliance with items (2), (5) and (6) under the rule. In a petition filed June 28, 2011, the requirements for proof of proprietary interest and proof of irreparable damage were satisfied and a decision mailed July 15, 2011 advised that the remaining requirement for an executed oath or declaration for the patent application in compliance with 37 CFR 1.63 and 1.64 had not been presented executed by either the inventor or an assignee.

---

[1] A grantable petition under 37 CFR 1.47(b) requires:

(1) proof that the non-signing inventor cannot be reached or refuses to sign the oath or declaration after having been presented with the application papers (specification, claims and drawings);

(2) an acceptable oath or declaration in compliance with 35 U.S.C. §§ 115 and 116;

(3) the petition fee;

(4) a statement of the last known address of the non-signing inventor;

(5) proof of proprietary interest, and

(6) proof of irreparable damage.

A request for reconsideration was filed July 14, 2011 and dismissed in a decision mailed August 23, 2011 because while a signed statement by John Hagy had been submitted, a signed OATH/DECLARATION had not been submitted. Petitioner was advised that the OATH/DECLARATION could not be left blank.

Comes now petitioner with the instant request for reconsideration and in response to the decision dismissing the petition filed July 14, 2011 providing an oath/declaration executed by John Hagy, Chief Legal Officer.

All requirements under 37 CFR 1.47(b) therefore having been met, as provided in Rule 1.47(c), this Office will forward notice of this application's filing to the non-signing inventor at the address given in the petition. Notice of the filing of this application will also be published in the Official Gazette.

This matter is being referred to the Office of Patent Application Process for further pre-examination processing.

Telephone inquiries related to this decision should be directed to the undersigned Petitions Attorney at (571) 272-3212.

Patricia Faison-Ball

Patricia Faison-Ball
Senior Petitions Attorney
Office of Petitions

UNITED STATES PATENT AND TRADEMARK OFFICE

UNITED STATES DEPARTMENT OF COMMERCE
United States Patent and Trademark Office
Address: COMMISSIONER FOR PATENTS
P.O. Box 1450
Alexandria, Virginia 22313-1450
www.uspto.gov

APPLICATION NO.	FILING DATE	FIRST NAMED INVENTOR	ATTORNEY DOCKET NO.	CONFIRMATION NO.
13/036,091	02/28/2011	Jeffrey Vincent TOFANO	Q10-1036-US1	4267

76863 7590 08/25/2011
KRAGULJAC & KALNAY
4700 ROCKSIDE ROAD
SUMMIT ONE, SUITE 510
INDEPENDENCE, OH 44131

EXAMINER

ART UNIT	PAPER NUMBER
2157	

NOTIFICATION DATE	DELIVERY MODE
08/25/2011	ELECTRONIC

Please find below and/or attached an Office communication concerning this application or proceeding.

The time period for reply, if any, is set in the attached communication.

Notice of the Office communication was sent electronically on above-indicated "Notification Date" to the following e-mail address(es):

mary@kkpatent.com
ptomail@kkpatent.com

UNITED STATES PATENT AND TRADEMARK OFFICE

Commissioner for Patents
United States Patent and Trademark Office
P.O. Box 1450
Alexandria, VA 22313-1450
www.uspto.gov

KRAGULJAC & KALNAY
4700 ROCKSIDE ROAD
SUMMIT ONE, SUITE 510
INDEPENDENCE OH 44131

In re Application of: J. TOFANO
Application No. 13/036,091
Filed: February 28, 2011
Atty. Docket No.: **Q10-1036-US1**
For: **DATA REDUCTION INDEXING**

DECISION ON REQUEST TO PARTICIPATE IN PATENT PROSECUTION HIGHWAY PILOT PROGRAM AND PETITION TO MAKE SPECIAL UNDER 37 CFR 1.102(d)

This is a decision on the request to participate in the Patent Prosecution Highway (PPH) program and the petition under 37 CFR 1.102(d), filed July 13, 2011, to make the above-identified application special.

The request and petition are **GRANTED**.

A grantable request to participate in the PPH program and petition to make special require:

(1) The U.S. application is
(a) a Paris Convention application which either
(i) validly claims priority under 35 U.S.C. 119(a) and 37 CFR 1.55 to one or more applications filed in the IPAU, or
(ii) validly claims priority to a PCT application that contains no priority claims,

Or

(b) a national stage application under the PCT (an application which entered the national stage in the U.S. from a PCT international application after compliance with 35 U.S.C. 371), which PCT application
(i) validly claims priority to an application filed in the IPAU, or
(ii) validly claims priority to a PCT application that contains no priority claims, or
(iii) contains no priority claim,

Or

(c) a so-called bypass application filed under 35 U.S.C. 111 (a) which validly claims benefit under 35 U.S.C. 120 to a PCT application, which PCT application
(i) validly claims priority to an application filed in the IPAU, or
(ii) validly claims priority to a PCT application that contains no priority claims, or
(iii) contains no priority claim.

(2) Applicant must submit a copy of the allowable/patentable claim(s) from the IPAU application(s);

(3) Applicant must:
a. Ensure all the claims in the U.S. application must sufficiently correspond or be amended to sufficiently correspond to the allowable/patentable claim(s) in the IPAU application(s) and
b. Submit a claims correspondence table in English;

(4) Examination of the U.S. application has not begun;

(5) Applicant must submit a copy of all the office action(s) (which are relevant to patentability) from each of the IPAU application(s) containing the allowable/patentable claim(s);

(6) Applicant must submit an IDS listing the documents cited by the IPAU examiner in the IPAU office action (unless already submitted in this application) along with copies of the documents except U.S. patents or U.S. patent application publications;

(7) The required petition fee under 37 CFR 1.17(h).

The request to participate in the PPH pilot program and petition are found to comply with the above requirements. Accordingly, the above-identified application has been accorded "special" status.

Telephone inquiries concerning this decision should be directed to Mano Padmanabhan at 571-272-4210.

All other inquiries concerning the examination or status of the application is accessible in the PAIR system at http://www.uspto.gov/ebc/index.html.

The application is being forwarded to the examiner for action on the merits commensurate with this decision.

/Mano Padmanabhan/

Mano Padmanabhan
Quality Assurance Specialist, Technology Center 2100, Workgroup 2180
571-272-4210

Doc Code: PET.GREEN
Document Description: Petition for Green Tech Pilot

PTO/SB/420 (03-11)

PETITION TO MAKE SPECIAL UNDER THE GREEN TECHNOLOGY PILOT PROGRAM

Attorney Docket Number: 90367-790630 (000330US)	Application Number (if known): 13/036,199	Filing date: 02-28-2011

First Named Inventor: PHILIP N. KELLER

Title: DEPLOYABLE STRUCTURES HAVING COLLAPSIBLE STRUCTURAL MEMBERS

APPLICANT HEREBY REQUESTS TO PARTICIPATE IN THE GREEN TECHNOLOGY PILOT PROGRAM FOR THE ABOVE-IDENTIFIED APPLICATION. See Instruction Sheet on page 2.

This petition must be timely filed electronically using the USPTO electronic filing system, EFS-Web.

1. By filing this petition:

   Applicant is requesting early publication: Applicant hereby requests early publication under 37 CFR 1.219 and the publication fee set forth in 37 CFR 1.18(d) accompanies this request.

2. By filing this petition: applicant is agreeing to make an election without traverse in a telephonic interview and elect an invention that meets the eligibility requirements for the Green Technology Pilot Program, if the Office determines that the claims are not obviously directed to a single invention. See Instruction Sheet.

3. This request is accompanied by statements of special status for the eligibility requirement.

4. The application contains no more than three (3) independent claims and twenty (20) total claims.

5. The application does not contain any multiple dependent claims.

6. Other attachments: Statement of special status

Signature /Jason A. Sanders/	Date 04-21-2011
Name (Print/Typed) Jason A. Sanders	Registration Number 59984

Note: *Signatures of all the inventors or assignees of record of the entire interest or their representative(s) are required in accordance with 37 CFR 1.33 and 11.18. Please see 37 CFR 1.4(d) for the form of the signature. If necessary, submit multiple forms for more than one signature, see below*.*

☐ *Total of _____ forms are submitted.

If you need assistance in completing the form, call 1-800-PTO-9199 and select option 2.

Instruction Sheet for
Petition to Make Special Under the Green Technology Pilot Program

(Not to be Submitted to the USPTO)

The following is a summary of the requirements (for more information see the notices (i) "Pilot Program for Green Technologies Including Greenhouse Gas Reduction," (ii) "Elimination of Classification Requirement in the Green Technology Pilot Program," and (iii) "Expansion and Extension of the Green Technology Pilot Program," available on the USPTO web site at http://www.uspto.gov/patents/init_events/green_tech.jsp):

(1) The application must be a non-reissue, non-provisional utility application filed under 35 U.S.C. 111(a), or an international application that has entered the national stage in compliance with 35 U.S.C. 371, irrespective of the filing date of the application. Reexamination proceedings are excluded from this pilot program.

(2) The application must contain three or fewer independent claims and twenty or fewer total claims. The application must not contain any multiple dependent claims. For an application that contains more than three independent claims or twenty total claims, or multiple dependent claims, applicant must file a preliminary amendment in compliance with 37 CFR 1.121 to cancel the excess claims and/or the multiple dependent claims at the time the petition to make special is filed.

(3) The claims must be directed to a single invention that materially enhances the quality of the environment, or that materially contributes to: (1) the discovery or development of renewable energy resources; (2) the more efficient utilization and conservation of energy resources; or (3) green house gas emission reduction (see the eligibility requirements of sections II and III of the notice (i) cited above). The petition must include a statement that, if the USPTO determines that the claims are directed to multiple inventions (e.g., in a restriction requirement), applicant will agree to make an election without traverse in a telephonic interview, and elect an invention that meets the eligibility requirements in section II or III of the notice (i) cited above.

(4) The petition to make special must be timely filed electronically using the USPTO electronic filing system, EFS-Web, and selecting the document description of "Petition for Green Tech Pilot" on the EFS-Web screen. Applicant should use form PTO/SB/420, which is available as a Portable Document Format (PDF) fillable form in EFS-Web and on the USPTO Web site.

(5) The petition to make special must be filed at least one day prior to the date that a first Office action (which may be an Office action containing only a restriction requirement) appears in the Patent Application Information Retrieval (PAIR) system. Applicant may check the status of the application using PAIR.

(6) The petition to make special must be accompanied by a request for early publication in compliance with 37 CFR 1.219 and the publication fee set forth in 37 CFR 1.18(d).

Privacy Act Statement

The **Privacy Act of 1974 (P.L. 93-579)** requires that you be given certain information in connection with your submission of the attached form related to a patent application or patent. Accordingly, pursuant to the requirements of the Act, please be advised that: (1) the general authority for the collection of this information is 35 U.S.C. 2(b)(2); (2) furnishing of the information solicited is voluntary; and (3) the principal purpose for which the information is used by the U.S. Patent and Trademark Office is to process and/or examine your submission related to a patent application or patent. If you do not furnish the requested information, the U.S. Patent and Trademark Office may not be able to process and/or examine your submission, which may result in termination of proceedings or abandonment of the application or expiration of the patent.

The information provided by you in this form will be subject to the following routine uses:

1. The information on this form will be treated confidentially to the extent allowed under the Freedom of Information Act (5 U.S.C. 552) and the Privacy Act (5 U.S.C 552a). Records from this system of records may be disclosed to the Department of Justice to determine whether disclosure of these records is required by the Freedom of Information Act.
2. A record from this system of records may be disclosed, as a routine use, in the course of presenting evidence to a court, magistrate, or administrative tribunal, including disclosures to opposing counsel in the course of settlement negotiations.
3. A record in this system of records may be disclosed, as a routine use, to a Member of Congress submitting a request involving an individual, to whom the record pertains, when the individual has requested assistance from the Member with respect to the subject matter of the record.
4. A record in this system of records may be disclosed, as a routine use, to a contractor of the Agency having need for the information in order to perform a contract. Recipients of information shall be required to comply with the requirements of the Privacy Act of 1974, as amended, pursuant to 5 U.S.C. 552a(m).
5. A record related to an International Application filed under the Patent Cooperation Treaty in this system of records may be disclosed, as a routine use, to the International Bureau of the World Intellectual Property Organization, pursuant to the Patent Cooperation Treaty.
6. A record in this system of records may be disclosed, as a routine use, to another federal agency for purposes of National Security review (35 U.S.C. 181) and for review pursuant to the Atomic Energy Act (42 U.S.C. 218(c)).
7. A record from this system of records may be disclosed, as a routine use, to the Administrator, General Services, or his/her designee, during an inspection of records conducted by GSA as part of that agency's responsibility to recommend improvements in records management practices and programs, under authority of 44 U.S.C. 2904 and 2906. Such disclosure shall be made in accordance with the GSA regulations governing inspection of records for this purpose, and any other relevant (*i.e.*, GSA or Commerce) directive. Such disclosure shall not be used to make determinations about individuals.
8. A record from this system of records may be disclosed, as a routine use, to the public after either publication of the application pursuant to 35 U.S.C. 122(b) or issuance of a patent pursuant to 35 U.S.C. 151. Further, a record may be disclosed, subject to the limitations of 37 CFR 1.14, as a routine use, to the public if the record was filed in an application which became abandoned or in which the proceedings were terminated and which application is referenced by either a published application, an application open to public inspection or an issued patent.
9. A record from this system of records may be disclosed, as a routine use, to a Federal, State, or local law enforcement agency, if the USPTO becomes aware of a violation or potential violation of law or regulation.

UNITED STATES PATENT AND TRADEMARK OFFICE

UNITED STATES DEPARTMENT OF COMMERCE
United States Patent and Trademark Office
Address: COMMISSIONER FOR PATENTS
P.O. Box 1450
Alexandria, Virginia 22313-1450
www.uspto.gov

APPLICATION NO.	FILING DATE	FIRST NAMED INVENTOR	ATTORNEY DOCKET NO.	CONFIRMATION NO.
13/036,199	02/28/2011	Philip N. Keller	90367-790630 (000330US)	4474

20350 7590 05/27/2011
KILPATRICK TOWNSEND & STOCKTON LLP
TWO EMBARCADERO CENTER
EIGHTH FLOOR
SAN FRANCISCO, CA 94111-3834

EXAMINER

ART UNIT	PAPER NUMBER
3633	

NOTIFICATION DATE	DELIVERY MODE
05/27/2011	ELECTRONIC

Please find below and/or attached an Office communication concerning this application or proceeding.

The time period for reply, if any, is set in the attached communication.

Notice of the Office communication was sent electronically on above-indicated "Notification Date" to the following e-mail address(es):

Docket@kilpatricktownsend.com
ipefiling@kilpatricktownsend.com
jlhice@kilpatrick.foundationip.com

UNITED STATES PATENT AND TRADEMARK OFFICE

Commissioner for Patents
United States Patent and Trademark Office
P.O. Box 1450
Alexandria, VA 22313-1450
www.uspto.gov

MAY 2 6 2011

KILPATRICK TOWNSEND & STOCKTON LLP
TWO EMBARCADERO CENTER
EIGHTH FLOOR
SAN FRANCISCO CA 94111-3834

In re Application of	:	
PHILIP KELLER et al.	:	DECISION ON PETITION
Application No. 13/036,199	:	TO MAKE SPECIAL UNDER
Filed: February 28, 2011	:	THE GREEN TECHNOLOGY
Attorney Docket No. 90367-790630 (000330US)	:	PILOT PROGRAM

This is a decision on the petition under 37 CFR 1.102, filed April 21, 2011 to make the above-identified application special under the pilot program for applications pertaining to Green Technologies as set forth in 74 Federal Register Notice 64666 (December 8, 2009) and amended by 75 Federal Register Notice 28554 (May 21, 2010) and 75 Federal Register Notice 69049 (November 10, 2010).

The petition is **GRANTED**.

A grantable petition to make an application special under 37 CFR 1.102 and the pilot program as set forth in 74 FR 64666 must be directed to a nonprovisional application filed under 35 USC 111(a) or be a national stage entry under 35 USC 371, exclusive of any reissue applications.

In order to qualify for special status, the following requirements must be met. 1) The application must have no more than 3 independent claims and no more than 20 total claims. 2) The application must not contain any multiple dependent claims. 3) The petition must state the basis for seeking special status, i.e., the claimed invention either: A) materially enhances the quality of the environment or B) materially contributes to: i) the discovery or development of renewable energy resources, ii) the more efficient utilization and conservation of energy resources, or iii) greenhouse gas emission reduction. 4) If the disclosure is not clear on its face that the claimed invention materially contributes under category (A) or (B), the petition must be accompanied by a statement by the applicant, assignee, or an attorney/agent registered to practice before the Office explaining how the materiality standard is met. 5) A statement that applicant will agree to make an election without traverse in a telephonic interview if a restriction requirement is made by the examiner. 6) The petition to make special must be filed electronically. 7) The petition must be filed at least one day prior to the date that a first Office Action appears in the Patent Application Information Retrieval (PAIR) system. 8) The petition must be accompanied by a request for early publication in compliance with 37 CFR 1.219 and include the publication fee as set forth in 37 CFR 1.18(d).

The requirement for a fee for consideration of the petition to make special for applications pertaining to Green Technologies has been waived.

The petition is granted for claims 1-13 directed to a deployable solar array in combination with the solar photovoltaic cells. The claimed deployable structure of claims 14-20 (without the solar photovoltaic cells) does not meet the requirement of the green technology pilot program as the deployable structure by itself is just a supporting structure which cannot generate energy or collect solar energy from the sun to generate electricity through the photovoltaic effect. The deployable structure by itself does not materially contribute to the development of renewable energy resources.

The instant petition complies with items 1 – 8 above. Accordingly, the above-identified application has been accorded "special" status.

Telephone inquires concerning this decision should be directed to Lanna Mai at 571-272-6867.

The application is being forwarded to the Technology Center Art Unit 3633 for action on the merits commensurate with this decision.

/Lanna Mai/

Lanna Mai
Quality Assurance Specialist
Technology Center 3600

UNITED STATES PATENT AND TRADEMARK OFFICE

Commissioner for Patents
United States Patent and Trademark Office
P.O. Box 1450
Alexandria, VA 22313-1450
www.uspto.gov

MAY 16 2011

FISH & ASSOCIATES, PC
ROBERT D. FISH
2603 Main Street
Suite 1000
Irvine CA 92614-6232

In re Application of: Garth et al. Application No.: 13/036340 Filed: February 28, 2011 Title: HIGHLY ADJUSTABLE LUMBAR BRACE	DECISION ON PETITION TO MAKE SPECIAL FOR NEW APPLICATION UNDER 37 C.F.R. § 1.102 & M.P.E.P. § 708.02

This is a decision on the petition filed on February 28, 2011 to make the above-identified application special for accelerated examination procedure under 37 C.F.R. § 1.102(d).

The petition to make the application special is **DISMISSED**.

REGULATION AND PRACTICE

A grantable petition to make special under 37 C.F.R. § 1.102(d) and pursuant to the "Change to Practice for Petitions in Patent Applications to Make Special and for Accelerated Examination" published in the Federal Register on June 26, 2006 (71 Fed. Reg. 36323), must satisfy the following conditions:

I. Conditions Regarding the Application:

1. the application must be a non-reissue utility or design application filed under 37 CFR 1.111(a);
2. the application, the petition and the required fees must be filed electronically using the USPTO's electronic filing system (EFS), or EFS-web; if not filed electronically, a statement asserting that EFS and EFS-web were not available during the normal business hours.
3. at the time of filing, the application must be complete under 37 CFR 1.51 and in condition for examination;
4. the application must contain three or fewer independent claims and twenty or fewer total claims and the claims must be directed to a single invention.

II. Conditions Regarding the Petition:

The petition must:

1. be filed with the application;
2. include a statement that applicant agrees not to separately argue the patentability of any independent claim during any appeal in the application;

3. include a statement that applicant agrees to make an election without traverse in a telephone interview.

4. include a statement that applicant agrees to conduct such an interview when requested by the examiner.

5. include a statement, made based on a good faith belief, that a preexamination search in compliance with the following requirements, was conducted, including an identification of the field of search by United States class and subclass, where applicable, and for database searches, the search logic or chemical structure or sequence used as a query, the name of the file(s) searched and the database service, and the date of the search.

The preexamination search must:

5.1 involve U.S. patents and patent application publications, foreign patent documents, and non-patent literature, unless the applicant can justify with reasonable certainty that no references more pertinent than those already identified are likely to be found in the eliminated sources and includes such a justification with this statement;

5.2. be directed to the claimed invention and encompass all of the features of the claims, giving the claims the broadest reasonable interpretation;

5.3. encompass the disclosed features that may be claimed.

6. must provide in support of the petition an accelerated examination support document. An accelerated examination support document must include:

6.1. an information disclosure statement (IDS) in compliance with 37 CFR 1.98 citing each reference deemed most closely related to the subject matter of each of the claims;

6.2. an identification of all the limitations in the claims that are disclosed by the reference specifying where the limitation is disclosed in the cited reference;

6.3. a detailed explanation of how each of the claims are patentable over the references cited with particularity required by 37 CFR 1.111(b) and (c);

6.4. a concise statement of the utility of the invention as defined in each of the independent claims (unless the application is a design application);

6.5. a showing of where each limitation of the claims finds support under 35 U.S.C. 112, first paragraph, in the written description of the specification. If applicable, the showing must also identify: (1) each means- (or step) plus-function claim element that invokes consideration under 35 U.S.C. 112, sixth paragraph; and (2) the structure, material, or acts in the specification that corresponds to each means- (or step) plus-function claim element that invokes consideration under 35 U.S.C. 112, sixth paragraph; if the application claims the benefit of one or more applications under title 35, United States Code, the showing must also include where each limitation of the claims finds support under 35 U.S.C. 112, first paragraph, in each such application in which such supports exists;

6.6. an identification of any cited references that may be disqualified under 35 U.S.C. 103(c).

REVIEW OF FACTS

The conditions I:1-4, II: 1-5, 5.3, 6, 6.1, 6.2, 6.3, 6.4 and 6.6 above are considered to have been met. However, the petition fails to comply with conditions II : 5.1, 5.2, and 6.5 above.

Therefore, the petition fails to meet the required conditions to be accorded special status under the accelerated examination procedure.

Discussion

When referring to "the petition" hereinbelow, the received papers under consideration include the PTO/SB/28 form, the "pre-examination search document" including pages 1-32; the "accelerated examination support document" comprising pages 1-15, and an Information Disclosure Statement including form PTO/SB/08A.

Regarding the requirements of section II element 5.1 and 5.2 outlined above, it appears the search outlined in the petition omitted a critical search area by not searching in class 602 subclasses 6 and 13. Searching in class 128 subclasses 869, 870, and 876 also appear on point.

Regarding the requirements of section II element 6.5 outlined above, the requirements of this section are not met. A grantable petition requires petitioner to provide a showing of where each limitation of the claims finds support under 35 U.S.C. 112, first paragraph, in the written description of the specification. If applicable, the showing must also identify: (1) each means- (or step) plus-function claim element that invokes consideration under 35 U.S.C. 112, sixth paragraph; and (2) the structure, material, or acts in the specification that corresponds to each means- (or step) plus-function claim element that invokes consideration under 35 U.S.C. 112, sixth paragraph; if the application claims the benefit of one or more applications under title 35, United States Code, the showing must also include where each limitation of the claims finds support under 35 U.S.C. 112, first paragraph, in each such application in which such supports exists. In the instant petition, the 35 U.S.C. 112 first paragraph support for the current application is not shown.

DECISION

For the above-stated reasons, the petition is **dismissed**. The application will therefore be taken up by the examiner for action in its regular turn.

Petitioner is given a single opportunity to perfect the petition. Any request for reconsideration of this decision must be submitted within 1 (one) month or 30 (thirty) days, whichever is longer, (no extension of time under 37 CFR 1.136(a)) from the date of this decision in order to be considered timely. Any request for reconsideration must address all of the deficiencies indicated above.

Petitioner is reminded that, upon granting of the special status of the application on request for reconsideration, the application will be processed expeditiously. However, due to the dismissal of the instant petition, examination may not be completed within twelve months of the filing date of the application.

Any inquiry regarding this decision should be directed to Linda J. Sholl, TC 3700 Special Programs Examiner, at (571) 272-4391.

/Linda J. Sholl/
Linda J. Sholl
Special Programs Examiner
Technology Center 3700

UNITED STATES PATENT AND TRADEMARK OFFICE

Commissioner for Patents
United States Patent and Trademark Office
P.O. Box 1450
Alexandria, VA 22313-1450
www.uspto.gov

JUL 14 2011

FISH & ASSOCIATES, PC
ROBERT D. FISH
2603 Main Street
Suite 1000
Irvine CA 92614-6232

In re Application of: Garth et al. Application No.: 13/036340 Filed: February 28, 2011 Title: HIGHLY ADJUSTABLE LUMBAR BRACE	DECISION ON PETITION TO MAKE SPECIAL FOR NEW APPLICATION UNDER 37 C.F.R. § 1.102 & M.P.E.P. § 708.02

This is a decision on the renewed petition filed on June 16, 2011 to make the above-identified application special for accelerated examination procedure under 37 C.F.R. § 1.102(d).

The petition to make the application special is GRANTED.

The application is eligible for accelerated examination and the petition complies with the conditions for granting the application special status pursuant to the "Change to Practice for Petitions in Patent Applications to Make Special and for Accelerated Examination" published June 26, 2006, in the Federal Register. (71 Fed. Reg. 36323).

The prosecution of the instant application will be conducted expeditiously according to the following guidelines.

1. The application will be docketed to an examiner and taken up for action within two weeks of the date of this decision.

2. Restriction Practice:
   If the examiner determines that the claims are not directed to a single invention, a telephone request to elect one single invention will be made pursuant to MPEP 812.01. As a prerequisite to the grant of this petition, the applicant has agreed to make an oral election, by telephone, without traverse. If the applicant refuses to make an election without traverse, or the examiner cannot reach the applicant after a reasonable effort, the examiner will treat the first claimed invention (invention defined by claim 1) as having being constructively elected without traverse for examination.

3. Office action:
   If it is determined that, after appropriate consultation, there is a potential rejection or any other issue to be addressed, the examiner will telephone the applicant and arrange an interview to discuss and resolve the issue. An Office action, other than a Notice of Allowance and Fee(s) Due (Notice of Allowance), will not be issued unless either: 1) an interview was conducted but did not result in agreed to action that places the application in condition for allowance, or, 2) a determination is made that an interview would be unlikely to result in the application being placed in condition for allowance, and 3) an internal conference has been held to review any rejection of any claim.

4. Time for Reply:
   An Office action other than a Notice of Allowance or a final Office action will set a shortened statutory period of one month or thirty days, whichever is longer, for reply with no extension of time available under 37 CFR 1.136(a). Failure to timely file a reply within this non-extendible period for reply will result in the abandonment of the application.

5. Reply by Applicant:
   A timely reply to an Office action other than the Notice of Allowance must be submitted electronically via EFS or EFS-web and limited to addressing the rejections, objections and requirement made. Any amendment that attempts to: 1) add claims which would result in more than three pending independent claims or more than twenty pending total claims; 2) present claims not encompassed by the pre-examination search or an updated accelerated examination support document; or 3) present claims that are directed a non-elected invention or an invention other than that previously claimed and examined in the application, will be treated as not fully responsive and will not be entered.

   For any amendment to the claims (including any new claim) that is not encompassed by the accelerated examination support document, applicant must provide an updated accelerated examination support document that encompasses the amended or new claims at the time of filing of the amendment.

   To proceed expeditiously with the examination, it is recommended that a reply with amendments made to any claim or with any new claim being added be accompanied by an updated accelerated examination support document or a statement explaining how the amended or new claim is supported by the original accelerated examination support document.

6. Information Disclosure Statement (IDS):
   Any IDS filed during prosecution must be submitted electronically via EFS or EFS-web, accompanied by an updated accelerated examination support document, and be in compliance with 37 CFR 1.97 and 1.98.

7. Post-Allowance Processing:
   To expedite processing of the allowed application into a patent, the applicant must: 1) pay the required fees within one month of the date of the Notice of Allowance, and 2) not file any post allowance papers not required by the Office. In no event may the issue fee be paid and accepted later than three months from the date of the Notice of Allowance.

8. After-Final and Appeal Procedures:
   To expedite prosecution, after receiving the final Office action, applicant must: 1) promptly file a notice of appeal, an appeal brief and appeal fees; and 2) not request a pre-appeal brief conference.

   Any amendment, affidavit or other evidence filed after final Office action must comply with applicable rules and the requirements outlined in numbered paragraphs 5 and 6 above.

   On appeal, the application will proceed according to normal appeal procedures. After appeal, the application will again be treated special.

9. Proceedings Outside the Normal Examination Process:
   If the application becomes involved in a proceeding that is outside the normal examination process (e.g., a secrecy order, national security review, interference proceeding, petitions under 37 CFR 1.181, 182 or 183), the application will be treated special before and after such proceeding.

10. Final Disposition:
    The twelve month goal of this accelerated examination procedure ends with a final disposition. The mailing of a final Office action, a Notice of Allowance, the filing of a Notice of Appeal, or the filing of a Request for Continued Examination (RCE) is the final disposition.

If, during prosecution, a paper is not filed electronically using EFS-web, a reply is filed but is not fully responsive, the application is involved in an appeal, or a proceeding outside normal examination process, the application will still be examined expeditiously, however, the final disposition may occur more than twelve months from the filing of the application.

Any inquiry regarding this decision should be directed to Linda Sholl at (571) 272-4391

/Linda Sholl/
Linda Sholl
Special Programs Examiner
Technology Center 3700

UNITED STATES PATENT AND TRADEMARK OFFICE

UNITED STATES DEPARTMENT OF COMMERCE
United States Patent and Trademark Office
Address: COMMISSIONER FOR PATENTS
P.O. Box 1450
Alexandria, Virginia 22313-1450
www.uspto.gov

APPLICATION NO.	FILING DATE	FIRST NAMED INVENTOR	ATTORNEY DOCKET NO.	CONFIRMATION NO.
13/036,487	02/28/2011	Emi Maruyama	8073P1132	5031

7590 01/23/2012
BLAKELY SOKOLOFF TAYLOR & ZAFMAN LLP
1279 OAKMEAD PARKWAY
SUNNYVALE, CA 94085-4040

EXAMINER
KOONTZ, TAMMY J

ART UNIT	PAPER NUMBER
3974	

MAIL DATE	DELIVERY MODE
01/23/2012	PAPER

DECISION GRANTING PETITION UNDER 37 CFR 1.138(d)

The declaration of express abandonment is recognized

This is in response to the petition under 37 CFR 1.138(d), requesting for a refund of any previously paid search fee and excess claims fee in the above-identified application.

The petition is granted.

The express abandonment is recognized. Any previously paid search fee and excess claims fee are hereby refunded.

Telephone inquiries should be directed to the Office of Data Management at (571) 272-4200.

Betty Powell

Patent Publication Branch
Office of Data Management

FORM PET651G (Rev. 08/07)

UNITED STATES PATENT AND TRADEMARK OFFICE

Commissioner for Patents
United States Patent and Trademark Office
P.O. Box 1450
Alexandria, VA 22313-1450
www.uspto.gov

MAILED

JAN 27 2012

PCT LEGAL ADMINISTRATION

FISH & RICHARDSON P.C. (BO)
P.O. BOX 1022
MINNEAPOLIS MN 55440-1022

In re Application of
PODHAJCER, Osvaldo L.
Application No. : 13/036,536
Filed: 28 February 2011
ATTY Docket No.: 15138-0003002

DECISION ON PETITION
UNDER 37 C.F.R. § 1.78(a)(3)

This decision is issued in response to the petition under 37 C.F.R. § 1.78(a)(3), filed 24 August 2011, to accept an unintentionally delayed claim under 35 U.S.C. §120 for the benefit of priority to prior-filed PCT application PCT/US2004/021543.

For the reasons discussed below, the petition is **DISMISSED AS MOOT**.

"Where proper reference to a national stage application exists, no reference to the corresponding PCT application is required because the national stage application effectively has the same U.S. filing date as the PCT application." Broadcast Innovation v. Charter Communications, 420 F.3d 1364, 1367.

Applicant's amendment to the first sentence of the specification, filed with the present petition, to include the reference to international application PCT/US2004/021543 is not necessary since the U.S. Application No. 10/563,049, being the national stage application of PCT/US2004/021543, has the same U.S. filing date as PCT application PCT/US2004/021543.

A corrected Filing Receipt, which includes the priority claim to the prior-filed international application, accompanies this decision.

This matter is being referred to Technology Center Art Unit 1633 for appropriate action on the merits in due course.

Shane Thomas
Special Program Examiner
Office of PCT Legal Administration
Tel: (571) 272-4188

Bryan Lin
PCT Legal Examiner
Office of PCT Legal Administration

UNITED STATES PATENT AND TRADEMARK OFFICE

Commissioner for Patents
United States Patent and Trademark Office
P.O. Box 1450
Alexandria, VA 22313-1450
www.uspto.gov

DORSEY & WHITNEY LLP - MINNEAPOLIS
ATTENTION: PATENT PROSECUTION DOCKETING DEPARTMENT
INTELLECTUAL PROPERTY PRACTICE GROUP - PT/23RD FL
50 SOUTH SIXTH STREET SUITE 1500
MINNEAPOLIS MN 55402-1498

MAILED
OCT 28 2011
OFFICE OF PETITIONS

In re Application of	:	
Ward, et al.	:	
Application No. 13/036,537	:	DECISION ACCORDING STATUS
Filed: February 28, 2011	:	UNDER 37 CFR 1.47(a)
Attorney Docket No. P191061.US.03	:	

This is in response to the petition under 37 CFR 1.47(a), filed October 14, 2011.

The petition under 37 CFR 1.47(a) is **GRANTED**.

It is concluded that petitioner has demonstrated that inventor Ward has refused to sign the declaration after having been presented with the application papers. Specifically, petitioner states that a copy of the application papers was mailed to Ward on August 5, 2011, but as of the mail date of the petition, no executed declaration has been received.

The above-identified application and papers have been reviewed and found to be in compliance with 37 CFR 1.47(a). Accordingly, the above-identified application is hereby accorded Rule 1.47(a) status. As provided in 37 CFR 1.47(c), this Office will forward notice of this application's filing to the non-signing inventor at his last known address provided in the petition. Notice of the filing of this application will also be published in the Official Gazette.

Receipt of the $200 petition fee is acknowledged.

The application is being forwarded to Office of Patent Application Processing for pre-examination processing.

Telephone inquiries related to this decision may be directed to the undersigned at (571)272-3207.

Cliff Congo
Petitions Attorney
Office of Petitions

UNITED STATES PATENT AND TRADEMARK OFFICE

Commissioner for Patents
United States Patent and Trademark Office
P.O. Box 1450
Alexandria, VA 22313-1450
www.uspto.gov

CHRISTOPHER WARD
PETTENLAAN 32
BE-2400 MOL
BELGIUM

MAILED
OCT 28 2011
OFFICE OF PETITIONS

In re Application of
Ward, et al.
Application No. 13/036,537
Filed: February 28, 2011
Title: System and Methods for Forming Sticks

LETTER

Dear Mr. Ward:

You are named as a joint inventor in the above-identified United States patent application filed under the provisions of 35 USC 116 (United States Code) and 37 CFR 1.47(a), Rules of Practice in Patent Cases. Should a patent be granted on the application you will be designated therein as a joint inventor.

As a joint inventor, you are entitled to inspect any paper in the file wrapper of the application, order copies of all or any part thereof (at a prepaid cost per 37 CFR 1.19) or make your position of record in the application. Alternatively, you may arrange to do any of the preceding through a registered patent attorney or agent presenting written authorization from you. If you care to join the application, agent of record would presumably assist you. Joining in the application would entail the filing of an appropriate oath or declaration by you pursuant to 37 CFR 1.63.

Telephone inquiries regarding this communication should be directed to Petitions Attorney Cliff Congo at (571)272-3207. Requests for information regarding your application should be directed to the File Information Unit at (703) 308-2733. Information regarding how to pay for and order a copy of the application, or a specific paper in the application, should be directed to the Certification Division at (703) 308-9726 or 1-800-972-6382 (outside the Washington D.C. area).

Cliff Congo
Petitions Attorney
Office of Petitions

UNITED STATES PATENT AND TRADEMARK OFFICE

UNITED STATES DEPARTMENT OF COMMERCE
United States Patent and Trademark Office
Address: COMMISSIONER FOR PATENTS
P.O. Box 1450
Alexandria, Virginia 22313-1450
www.uspto.gov

APPLICATION NO.	FILING DATE	FIRST NAMED INVENTOR	ATTORNEY DOCKET NO.	CONFIRMATION NO.
13/036,569	02/28/2011	Fiona M. Wood	127630-010107/CON2	5191

35893 7590 05/31/2011
GREENBERG TRAURIG (BOS)
ONE INTERNATIONAL PLACE, 20th FL
ATTN: PATENT ADMINISTRATOR
BOSTON, MA 02110

EXAMINER

ART UNIT	PAPER NUMBER
1653	

NOTIFICATION DATE	DELIVERY MODE
05/31/2011	ELECTRONIC

Please find below and/or attached an Office communication concerning this application or proceeding.

The time period for reply, if any, is set in the attached communication.

Notice of the Office communication was sent electronically on above-indicated "Notification Date" to the following e-mail address(es):

BosIpMail@gtlaw.com
cadanoc@gtlaw.com

UNITED STATES PATENT AND TRADEMARK OFFICE

Commissioner for Patents
United States Patent and Trademark Office
P.O. Box 1450
Alexandria, VA 22313-1450
www.uspto.gov

MAY 3 1 2011

GREENBERG TRAURIG, LLP
ONE INTERNATIONAL PLACE, 20th FL
ATTN: PATENT ADMINISTRATOR
BOSTON, MA 02110

In re Application of	:	DECISION ON REQUEST TO
WOOD ET AL.	:	PARTICIPATE IN PATENT
Application No. 13/036,569	:	PROSECUTION HIGHWAY
Filed: February 28, 2011	:	PROGRAM AND PETITION
Attorney Docket No. 127630-010107/CON2	:	TO MAKE SPECIAL UNDER
	:	37 CFR 1.102(a)

This is a decision on the request to participate in the Patent Prosecution Highway (PPH) program and the petition under 37 CFR 1.102(a), filed March 2, 2011, to make the above-identified application special.

The request and petition are **GRANTED**.

A grantable request to participate in the PPH program and petition to make special require:

(1) The U.S. application is (a) a Paris Convention application which either (i) validly claims priority under 35 U.S.C. 119(a) and 37 CFR 1.55 to one or more applications filed with IPAU, or (ii) validly claims priority under 35 U.S.C. 119(a)/365(a) to a PCT application that contains no priority claims, or (b) a national stage application under the PCT (an application which entered the national stage in the U.S. from a PCT international application after compliance with 35 U.S.C. 371), which PCT application (i) validly claims priority under 35 U.S.C. 365(b) to an application filed with IPAU, or (ii) validly claims priority under 35 U.S.C. 365(b) to a PCT application that contains no priority claims, or (iii) contains no priority claim, or (c) a so-called bypass application filed under 35 U.S.C. 111(a) which validly claims benefit under 35 U.S.C. 120 to a PCT application, which PCT application (i) validly claims priority under 35 U.S.C. 365(b) to an application filed with IPAU, or (ii) validly claims priority under 35 U.S.C. 365(b) to a PCT application that contains no priority claims, or (iii) contains no priority claim;
(2) The IPAU application(s) has at least one claim that was determined by IPAU to be allowable.;
(3) All the claims in each U.S. application for which a request for participation in the PPH pilot program is made must sufficiently correspond or be amended to sufficiently correspond to the allowable claims in the IPAU application(s);
(4) Examination of the U.S. application has not begun;
(5) Applicant must submit a copy of all the office actions (which are relevant to patentability) from each of the IPAU application(s) containing the allowable claims that are the basis for the request;
(6) Applicant must submit a copy of the allowable claims from the IPAU application(s);

(7) Applicant must submit a claim correspondence table in English; and
(8) Applicant must submit an information disclosure statement (IDS) listing the documents cited by the IPAU examiner in the IPAU office action (unless such an IDS has already been filed in the U.S. application).

The request to participate in the PPH program and petition comply with the above requirements. Accordingly, the above-identified application has been accorded "special" status.

Telephone inquiries concerning this decision should be directed to Cecilia Tsang at 571-272-0562.

All other inquiries concerning the examination or status of the application should be directed to Patent Application Information Retrieval (PAIR) system at the http://www.uspto.gov/ebc/index.html.

The application is being forwarded to the examiner for action on the merits commensurate with this decision.

Cecilia Tsang
Supervisory Patent Examiner
TC 1600

Doc code : PET.OP.AGE
Description : Petition to make special based on Age/Health

PTO/SB/130 (07-09)
Approved for use through 07/31/2012. OMB 0651- 0031
U.S. Patent and Trademark Office; U.S. DEPARTMENT OF COMMERCE
Under the Paperwork Reduction Act of 1995, no persons are required to respond to a collection of information unless it contains a valid OMB control number

PETITION TO MAKE SPECIAL BASED ON AGE FOR ADVANCEMENT OF EXAMINATION UNDER 37 CFR 1.102(c)(1)

Application Information

Application Number	13/036,576	Confirmation Number	5208	Filing Date	2011-02-28
Attorney Docket Number (optional)	HTHC 3424001	Art Unit	3623	Examiner	RINES Robert D
First Named Inventor	William Rex Akers				
Title of Invention	SYSTEM AND METHOD FOR MANAGING PRESCRPTION DATA TO GENERATE PRESCRIPTION REFILL DATA				

Attention: Office of Petitions
An application may be made special for advancement of examination upon filing of a petition showing that the applicant is 65 years of age, or more. No fee is required with such a petition. See 37 CFR 1.102(c)(1) and MPEP 708.02 (IV).

APPLICANT HEREBY PETITIONS TO MAKE SPECIAL FOR ADVANCEMENT OF EXAMINATION IN THIS APPLICATION UNDER 37 CFR 1.102(c)(1) and MPEP 708.02 (IV) ON THE BASIS OF THE APPLICANT'S AGE.

A grantable petition requires one of the following items:
(1) Statement by one named inventor in the application that he/she is 65 years of age, or more; or
(2) Certification by a registered attorney/agent having evidence such as a birth certificate, passport, driver's license, etc. showing one named inventor in the application is 65 years of age, or more.

Name of Inventor who is 65 years of age, or older

Given Name	Middle Name	Family Name	Suffix
William	Rex	Akers	

A signature of the applicant or representative is required in accordance with 37 CFR 1.33 and 10.18.
Please see 37 CFR 1.4(d) for the format of the signature.

Select (1) or (2) :

○ (1) I am an inventor in this application and I am 65 years of age, or more.

● (2) I am an attorney or agent registered to practice before the Patent and Trademark Office, and I certify that I am in possession of evidence, and will retain such in the application file record, showing that the inventor listed above is 65 years of age, or more.

Signature	/Gregory W. Carr/	Date (YYYY-MM-DD)	2011-04-28
Name	Gregory W. Carr	Registration Number	31093

PTO/SB/130 (07-09)
Approved for use through 07/31/2012. OMB 0651- 0031
U.S. Patent and Trademark Office; U.S. DEPARTMENT OF COMMERCE
Under the Paperwork Reduction Act of 1995, no persons are required to respond to a collection of information unless it contains a valid OMB control number

Privacy Act Statement

The Privacy Act of 1974 (P.L. 93-579) requires that you be given certain information in connection with your submission of the attached form related to a patent application or patent. Accordingly, pursuant to the requirements of the Act, please be advised that: (1) the general authority for the collection of this information is 35 U.S.C. 2(b)(2); (2) furnishing of the information solicited is voluntary; and (3) the principal purpose for which the information is used by the U.S. Patent and Trademark Office is to process and/or examine your submission related to a patent application or patent. If you do not furnish the requested information, the U.S. Patent and Trademark Office may not be able to process and/or examine your submission, which may result in termination of proceedings or abandonment of the application or expiration of the patent.

The information provided by you in this form will be subject to the following routine uses:

1. The information on this form will be treated confidentially to the extent allowed under the Freedom of Information Act (5 U.S.C. 552) and the Privacy Act (5 U.S.C. 552a). Records from this system of records may be disclosed to the Department of Justice to determine whether the Fr eedom of Information Act requires disclosure of these records.

2. A record from this system of records may be disclosed, as a routine use, in the course of presenting evidence to a court, magistrate, or administrative tribunal, including disclosures to opposing counsel in the course of settlement negotiations.

3. A record in this system of records may be disclosed, as a routine use, to a Member of Congress submitting a request involving an individual, to whom the record pertains, when the individual has requested assistance from the Member with respect to the subject matter of the record.

4. A record in this system of records may be disclosed, as a routine use, to a contractor of the Agency having need for the information in order to perform a contract. Recipients of information shall be required to comply with the requirements of the Privacy Act of 1974, as amended, pursuant to 5 U.S.C. 552a(m).

5. A record related to an International Application filed under the Patent Cooperation Treaty in this system of records may be disclosed, as a routine use, to the International Bureau of the World Intellectual Property Organization, pursuant to the Patent Cooperation Treaty.

6. A record in this system of records may be disclosed, as a routine use, to another federal agency for purposes of National Security review (35 U.S.C. 181) and for review pursuant to the Atomic Energy Act (42 U.S.C. 218(c)).

7. A record from this system of records may be disclosed, as a routine use, to the Administrator, General Services, or his/her designee, during an inspection of records conducted by GSA as part of that agency's responsibility to recommend improvements in records management practices and programs, under authority of 44 U.S.C. 2904 and 2906. Such disclosure shall be made in accordance with the GSA regulations governing inspection of records for this purpose, and any other relevant (i.e., GSA or Commerce) directive. Such disclosure shall not be used to make determinations about indivi duals.

8. A record from this system of records may be disclosed, as a routine use, to the public after either publication of the application pursuant to 35 U.S.C. 122(b) or issuance of a patent pursuant to 35 U.S.C. 151. Further, a record may be disclosed, subject to the limitations of 37 CFR 1.14, as a routine use, to the public if the record was filed in an application which became abandoned or in which the proceedings were terminated and which application is referenced by either a published application, an application open to public inspections or an issued patent.

9. A record from this system of records may be disclosed, as a routine use, to a Federal, State, or local law enforcement agency, if the USPTO becomes aware of a violation or potential violation of law or regulation.

UNITED STATES PATENT AND TRADEMARK OFFICE

Commissioner for Patents
United States Patent and Trademark Office
P.O. Box 1450
Alexandria, VA 22313-1450
www.uspto.gov

In re Application of
William Rex Akers

Application No. 13036576

Filed: February 28,2011

Attorney Docket No. HTHC 3424001

:DECISION ON PETITION TO MAKE SPECIAL
:UNDER 37 CFR 1.102(c)(1)

This is a decision on the electronic petition under 37 CFR 1.102 (c)(1), filed 28-APR-2011 to make the above-identified application special based on applicant's age as set forth in MPEP § 708.02, Section IV.

The petition is **GRANTED**.

A grantable petition to make an application special under 37 CFR 1.102(c)(1), MPEP § 708.02, Section IV: Applicant's Age must include a statement by applicant or a registered practitioner having evidence that applicant is at least 65 years of age. No fee is required.

Accordingly, the above-identified application has been accorded "special" status and will be taken up for action by the examiner upon the completion of all pre-examination processing.

Telephone inquiries concerning this electronic decision should be directed to the Electronic Business Center at 866-217-9197.

All other inquiries concerning either the examination or status of the application should be directed to the Technology Center.

UNITED STATES PATENT AND TRADEMARK OFFICE

Commissioner for Patents
United States Patent and Trademark Office
P.O. Box 1450
Alexandria, VA 22313-1450
www.uspto.gov

KENYON & KENYON LLP
1500 K STREET N.W.
SUITE 700
WASHINGTON DC 20005

MAILED
MAR 09 2012
OFFICE OF PETITIONS

In re Application of	: DECISION ON REQUEST TO
Seigo KASE et al.	: PARTICIPATE IN THE PATENT
Application No.: 13/036,581	: PROSECUTION HIGHWAY
Filed: February 28, 2011	: PROGRAM AND PETITION
Attorney Docket No.: 27372Z	: TO MAKE SPECIAL UNDER
For: ENDOSCOPE SYSTEM	: 37 CFR 1.102(a)

This is a decision on the request to participate in the Patent Prosecution Highway (PPH) program and the petition under 37 CFR 1.102(a), filed January 03, 2012, to make the above-identified application special.

The request and petition are **GRANTED**.

Discussion

A grantable request to participate in the PPH pilot program and petition to make special require:

1. The U.S. application is

    a. a Paris Convention application which either
        i. validly claims priority under 35 U.S.C. 119(a) and 37 CFR 1.55 to one or more applications filed in the JPO, or
        ii. validly claims priority to a PCT application that contains no priority claims, or
    b. a national stage application under the PCT (an application which entered the national stage in the U.S. from a PCT international application after compliance with 35 U.S.C. 371), which PCT application
        i. validly claims priority to an application filed in the JPO, or
        ii. validly claims priority to a PCT application that contains no priority claims, or
        iii. contains no priority claim, or
    c. a so-called bypass application filed under 35 U.S.C. 111(a) which validly claims benefit under 35 U.S.C. 120 to a PCT application, which PCT application
        i. validly claims priority to an application filed in the JPO, or
        ii. validly claims priority to a PCT application that contains no priority claims, or
        iii. contains no priority claim;

2. Applicant must submit a copy of:
    a. The allowable/patentable claim(s) from the JPO application(s);
    b. An English translation of the allowable/patentable claim(s) and
    c. A statement that the English translation is accurate;
3. Applicant must:
    a. Ensure all the claims in the U.S. application must sufficiently correspond or be amended to sufficiently correspond to the allowable/patentable claim(s) in the JPO application(s) and
    b. Submit a claims correspondence table in English;
4. Examination of the U.S. application has not begun;
5. Applicant must submit:
    a. Documentation of prior office action:
        i. a copy of the office action(s) just prior to the "Decision to Grant a Patent" from each of the JPO application(s) containing the allowable/patentable claim(s) or
        ii. if the allowable/patentable claims(s) are from a "Notification of Reasons for Refusal" then the Notification of Reasons for Refusal or
        iii. if the JPO application is a first action allowance then no office action from the JPO is necessary should be indicated on the request/petition form;
    b. An English language translation of the JPO Office action from (5)(a)(i)-(ii) above
    c. A statement that the English translation is accurate;
6. Applicant must submit:
    a. An IDS listing the documents cited by the JPO examiner in the JPO office action (unless already submitted in this application)
    b. Copies of the documents except U.S. patents or U.S. patent application publications (unless already submitted in this application);

The request to participate in the PPH pilot program and petition comply with the above requirements. Accordingly, the above-identified application has been accorded "special" status.

Inquiries concerning this decision should be directed to Michelle R. Eason at 571-272-4231.

All other inquiries concerning the examination or status of the application is accessible in the PAIR system at http://www.uspto.gov/ebc.index.html.

This application will be forwarded to the examiner for action on the merits commensurate with this decision.

Thurman K. Page
Petitions Examiner
Office of Petitions

UNITED STATES PATENT AND TRADEMARK OFFICE

UNITED STATES DEPARTMENT OF COMMERCE
United States Patent and Trademark Office
Address: COMMISSIONER FOR PATENTS
P.O. Box 1450
Alexandria, Virginia 22313-1450
www.uspto.gov

APPLICATION NO.	FILING DATE	FIRST NAMED INVENTOR	ATTORNEY DOCKET NO.	CONFIRMATION NO.
13/036,616	02/28/2011	Taiji SASAKI	2011_0318A	5278

52349 7590 06/14/2011
WENDEROTH, LIND & PONACK L.L.P.
1030 15th Street, N.W.
Suite 400 East
Washington, DC 20005-1503

EXAMINER
HASAN, SYED Y

ART UNIT	PAPER NUMBER
2484	

NOTIFICATION DATE	DELIVERY MODE
06/14/2011	ELECTRONIC

Please find below and/or attached an Office communication concerning this application or proceeding.

The time period for reply, if any, is set in the attached communication.

Notice of the Office communication was sent electronically on above-indicated "Notification Date" to the following e-mail address(es):

ddalecki@wenderoth.com
eoa@wenderoth.com

UNITED STATES PATENT AND TRADEMARK OFFICE

Commissioner for Patents
United States Patent and Trademark Office
P.O. Box 1450
Alexandria, VA 22313-1450
www.uspto.gov

Wenderoth, Lind, & Ponack LLP
1030 15th Street, NW
Suite 400 East
Washington DC 20005-1503

In re Application of: Sasaki et al.
Application No. 13/036,616
Filed: February 28, 2011
For: Information Recording Medium and Playback Device for Playing Back 3D Images

DECISION ON REQUEST TO PARTICIPATE IN PATENT PROSECUTION HIGHWAY PROGRAM AND PETITION TO MAKE SPECIAL UNDER 37 CFR 1.102(d)

This is a decision on the request to participate in the Patent Prosecution Highway (PPH) program and the petition under 37 CFR 1.102(d), filed May 4, 2011, to make the above-identified application special.

The petition is **GRANTED.**

A grantable request to participate in the PPH program and petition to make special require:

(1) The U.S. application is
   (a) a Paris Convention application which either (i) validly claims priority under 35 U.S.C. 119(a) and 37 CFR 1.55 to one or more applications filed in the JPO, or (ii) validly claims priority to a PCT application that contains no priority claims, or
   (b) a national stage application under the PCT (an application which entered the national stage in the U.S. from a PCT international application after compliance with 35 U.S.C. 371), which PCT application (i) validly claims priority to an application filed in the JPO, or (ii) validly claims priority to a PCT application that contains no priority claims, or (iii) contains no priority claim, or
   (c) a so-called bypass application filed under 35 U.S.C. 111 (a) which validly claims benefit under 35 U.S.C. 120 to a PCT application, which PCT application (i) validly claims priority to an application filed in the JPO, or (ii) validly claims priority to a PCT application that contains no priority claims, or (iii) contains no priority claim.

Where the JPO application that contains the allowable/patentable claims is not the same application for which priority is claimed in the U.S. application, applicant must identify the relationship between the JPO application that contains the allowable/patentable claims and the JPO priority application claimed in the U.S. application.

(2) Applicant must submit a copy of: (a) the allowable/patentable claim(s) from the Japanese application(s), (b) an English translation of the allowable/patentable claim(s), if the claims were published in a language other than English); and (c) a statement that the English translation is accurate.

(3) All the claims in the U.S. application must sufficiently correspond to the allowable/patentable claim(s) in the JPO application(s) and Applicant must submit a claim correspondence table in English.

(4) Examination of the U.S. application has not begun.

(5) Applicant must submit: (a) a copy of all the office action(s) (which are relevant to patentability), excluding "Decision to Grant a Patent" from each of the Japanese application(s) containing the allowable/patentable claim(s), (b) an English language translation of the JPO office action(s) (if the office action(s) are not in the English language) and (c) a statement that the English translation is accurate.

(6) Applicant must submit: (a) an IDS listing the documents cited by the JPO examiner in the JPO office action (unless already filed in this application) and (b) copies of all the documents cited in the JPO office action, except U.S. patents or U.S. patent application publications (unless already filed in this application).

(7) The required petition fee under 37 CFR 1.17(h) if filed before May 25, 2010.

The request to participate in the PPH program and petition are found to comply with all the above requirements. Accordingly, the above-identified application has been accorded "special" status.

Telephone inquiries concerning this decision should be directed to Tod Swann at 571-272-3612.

All other inquiries concerning the examination or status of the application is accessible in the PAIR system at http://www.uspto.gov/ebc/index.html.

The application is being forwarded to the examiner for action on the merits commensurate with this decision.

/Tod Swann/

Tod Swann
Quality Assurance Specialist
Technology Center 2400

Doc code : PET.OP.AGE
Description : Petition to make special based on Age/Health

PTO/SB/130 (07-09)
Approved for use through 07/31/2012. OMB 0651- 0031
U.S. Patent and Trademark Office; U.S. DEPARTMENT OF COMMERCE
Under the Paperwork Reduction Act of 1995, no persons are required to respond to a collection of information unless it contains a valid OMB control number

PETITION TO MAKE SPECIAL BASED ON AGE FOR ADVANCEMENT OF EXAMINATION UNDER 37 CFR 1.102(c)(1)

Application Information

Application Number	13/036,626	Confirmation Number	5298	Filing Date	2011-02-28
Attorney Docket Number (optional)	HTHC 3424002	Art Unit	3623	Examiner	RINES Robert D
First Named Inventor	William Rex Akers				
Title of Invention	SYSTEM AND METHOD FOR MANAGING PRESCRPTION DATA TO DETERMINE APPROVED PRICES				

Attention: Office of Petitions
An application may be made special for advancement of examination upon filing of a petition showing that the applicant is 65 years of age, or more. No fee is required with such a petition. See 37 CFR 1.102(c)(1) and MPEP 708.02 (IV).

APPLICANT HEREBY PETITIONS TO MAKE SPECIAL FOR ADVANCEMENT OF EXAMINATION IN THIS APPLICATION UNDER 37 CFR 1.102(c)(1) and MPEP 708.02 (IV) ON THE BASIS OF THE APPLICANT'S AGE.

A grantable petition requires one of the following items:
(1) Statement by one named inventor in the application that he/she is 65 years of age, or more; or
(2) Certification by a registered attorney/agent having evidence such as a birth certificate, passport, driver's license, etc. showing one named inventor in the application is 65 years of age, or more.

Name of Inventor who is 65 years of age, or older

Given Name	Middle Name	Family Name	Suffix
William	Rex	Akers	

A signature of the applicant or representative is required in accordance with 37 CFR 1.33 and 10.18.
Please see 37 CFR 1.4(d) for the format of the signature.

Select (1) or (2) :

○ (1) I am an inventor in this application and I am 65 years of age, or more.

● (2) I am an attorney or agent registered to practice before the Patent and Trademark Office, and I certify that I am in possession of evidence, and will retain such in the application file record, showing that the inventor listed above is 65 years of age, or more.

Signature	/Gregory W. Carr/	Date (YYYY-MM-DD)	2011-04-28
Name	Gregory W. Carr	Registration Number	31093

PTO/SB/130 (07-09)
Approved for use through 07/31/2012. OMB 0651- 0031
U.S. Patent and Trademark Office; U.S. DEPARTMENT OF COMMERCE
Under the Paperwork Reduction Act of 1995, no persons are required to respond to a collection of information unless it contains a valid OMB control number

Privacy Act Statement

The Privacy Act of 1974 (P.L. 93-579) requires that you be given certain information in connection with your submission of the attached form related to a patent application or patent. Accordingly, pursuant to the requirements of the Act, please be advised that: (1) the general authority for the collection of this information is 35 U.S.C. 2(b)(2); (2) furnishing of the information solicited is voluntary; and (3) the principal purpose for which the information is used by the U.S. Patent and Trademark Office is to process and/or examine your submission related to a patent application or patent. If you do not furnish the requested information, the U.S. Patent and Trademark Office may not be able to process and/or examine your submission, which may result in termination of proceedings or abandonment of the application or expiration of the patent.

The information provided by you in this form will be subject to the following routine uses:

1. The information on this form will be treated confidentially to the extent allowed under the Freedom of Information Act (5 U.S.C. 552) and the Privacy Act (5 U.S.C. 552a). Records from this system of records may be disclosed to the Department of Justice to determine whether the Fr eedom of Information Act requires disclosure of these records.

2. A record from this system of records may be disclosed, as a routine use, in the course of presenting evidence to a court, magistrate, or administrative tribunal, including disclosures to opposing counsel in the course of settlement negotiations.

3. A record in this system of records may be disclosed, as a routine use, to a Member of Congress submitting a request involving an individual, to whom the record pertains, when the individual has requested assistance from the Member with respect to the subject matter of the record.

4. A record in this system of records may be disclosed, as a routine use, to a contractor of the Agency having need for the information in order to perform a contract. Recipients of information shall be required to comply with the requirements of the Privacy Act of 1974, as amended, pursuant to 5 U.S.C. 552a(m).

5. A record related to an International Application filed under the Patent Cooperation Treaty in this system of records may be disclosed, as a routine use, to the International Bureau of the World Intellectual Property Organization, pursuant to the Patent Cooperation Treaty.

6. A record in this system of records may be disclosed, as a routine use, to another federal agency for purposes of National Security review (35 U.S.C. 181) and for review pursuant to the Atomic Energy Act (42 U.S.C. 218(c)).

7. A record from this system of records may be disclosed, as a routine use, to the Administrator, General Services, or his/her designee, during an inspection of records conducted by GSA as part of that agency's responsibility to recommend improvements in records management practices and programs, under authority of 44 U.S.C. 2904 and 2906. Such disclosure shall be made in accordance with the GSA regulations governing inspection of records for this purpose, and any other relevant (i.e., GSA or Commerce) directive. Such disclosure shall not be used to make determinations about indivi duals.

8. A record from this system of records may be disclosed, as a routine use, to the public after either publication of the application pursuant to 35 U.S.C. 122(b) or issuance of a patent pursuant to 35 U.S.C. 151. Further, a record may be disclosed, subject to the limitations of 37 CFR 1.14, as a routine use, to the public if the record was filed in an application which became abandoned or in which the proceedings were terminated and which application is referenced by either a published application, an application open to public inspections or an issued patent.

9. A record from this system of records may be disclosed, as a routine use, to a Federal, State, or local law enforcement agency, if the USPTO becomes aware of a violation or potential violation of law or regulation.

UNITED STATES PATENT AND TRADEMARK OFFICE

Commissioner for Patents
United States Patent and Trademark Office
P.O. Box 1450
Alexandria, VA 22313-1450
www.uspto.gov

In re Application of
William Rex Akers

Application No. 13036626

Filed: February 28,2011

Attorney Docket No. HTHC 3424002

:DECISION ON PETITION TO MAKE SPECIAL
:UNDER 37 CFR 1.102(c)(1)

This is a decision on the electronic petition under 37 CFR 1.102 (c)(1), filed 28-APR-2011 to make the above-identified application special based on applicant's age as set forth in MPEP § 708.02, Section IV.

The petition is **GRANTED**.

A grantable petition to make an application special under 37 CFR 1.102(c)(1), MPEP § 708.02, Section IV: Applicant's Age must include a statement by applicant or a registered practitioner having evidence that applicant is at least 65 years of age. No fee is required.

Accordingly, the above-identified application has been accorded "special" status and will be taken up for action by the examiner upon the completion of all pre-examination processing.

Telephone inquiries concerning this electronic decision should be directed to the Electronic Business Center at 866-217-9197.

All other inquiries concerning either the examination or status of the application should be directed to the Technology Center.

UNITED STATES PATENT AND TRADEMARK OFFICE

Commissioner for Patents
United States Patent and Trademark Office
P.O. Box 1450
Alexandria, VA 22313-1450
www.uspto.gov

ACUSHNET COMPANY
333 BRIDGE STREET
P. O. BOX 965
FAIRHAVEN MA 02719

MAILED
JUN 13 2011
OFFICE OF PETITIONS

In re Application of
Michael J. Sullivan et al.
Application No. 13/036,642
Filed: February 28, 2011
Attorney Docket No. B08-66-C1

: DECISION ON PETITION

This is a decision on the filing date petition filed May 11, 2011, under 37 CFR 1.57 requesting that the above referenced application be accorded a filing date of October 29, 2009. The petition is being treated under 37 CFR 1.53 (e)(2)[1].

The application was filed on February 28, 2011. However, on March 11, 2011 the Office of Data Management mailed a Notice of Incomplete Application stating that the application had not been filed with drawings and thus, the application could not be accorded a filing date.

In response, the present petition was filed. Petitioner admits that the drawings were inadvertently omitted but argues that the instant application, upon filing, properly claimed priority to U.S. Non-Provisional Application 12/342,545, which was filed December 23, 2008, and contained Figures 1-2.

Petitioner's arguments and evidence have been considered. However, a review of the application confirms that, as filed, the application contained at least one method claim. MPEP 601.01(f) provides that:

> It has been USPTO practice to treat an application that contains at least one process or method claim as an application for which a drawing is not necessary for an understanding of the invention under 35 U.S.C. 113 (first sentence). The same practice has been followed in composition applications. Other situations in which drawings are usually not considered necessary for the understanding of the invention under 35 U.S.C. 113 (first sentence) are;
>
> (B) Articles made from a particular material or composition : where the invention consists in making an article of a particular material or composition, unless significant details of structure or arrangement are involved in the article claims

[1] Any request for review of a notification pursuant to paragraph (e)(1) of this section, or a notification that the original application papers lack a portion of the specification or drawing(s), must be by way of a petition pursuant to this paragraph accompanied by the fee set forth in § 1.17(f). In the absence of a timely (§ 1.181(f)) petition pursuant to this paragraph, the filing date of an application in which the applicant was notified of a filing error pursuant to paragraph (e)(1) of this section will be the date the filing error is corrected.

Thus, pursuant to § 601.01(f), a drawing is not considered essential for a filing date. The instant application is entitled to a filing date without drawings present in the application.

Accordingly, the Office should have granted the application a filing date and mailed a Notice of Omitted Items instead of a Notice of Incomplete Nonprovisional Application. As stated in MPEP 601.01(g) under the section entitled, "Application Entitled to a Filing Date," applicant may submit an amendment to include the inadvertently omitted portion of the drawing(s) pursuant to 37 CFR 1.57(a):

> [i]f an application was filed on or after September 21, 2004, and contains a claim under 37 CFR 1.55 for priority of a prior-filed foreign application, or a claim under 37 CFR 1.78 for the benefit of a prior-filed provisional, nonprovisional, or international application that was present on the filing date of the application, and the omitted portion of the drawing(s) was inadvertently omitted from the application and is completely contained in the prior-filed application[.]

Please note that no petition is required and that the amendment must comply with 37 CFR 1.57(a) and 37 CFR 1.121. See MPEP § 201.17 The amendment filed with the instant petition to include the inadvertently omitted drawing(s) will be considered by the examiner.

To the extent the instant petition requests a filing date of February 28, 2011 with no drawings present in the application, the petition is **GRANTED**.

Given the basis for granting this petition, the petition fee in the amount of $400.00 will be credited back to deposit account no. 50-2309.

Pursuant to this decision, the application has been referred to Office of Patent Application Processing for:

- correction of the filing date to February 28, 2011
- for indication in Office records, as appropriate, that "0" sheets of drawings were present on filing and
- for issuance of a filing receipt.

Telephone inquiries concerning this matter should be directed to Senior Petitions Attorney Patricia Faison-Ball at (571) 272-3212.

Christopher Bottorff
Petitions Examiner
Office of Petitions

UNITED STATES PATENT AND TRADEMARK OFFICE

UNITED STATES DEPARTMENT OF COMMERCE
United States Patent and Trademark Office
Address: COMMISSIONER FOR PATENTS
P.O. Box 1450
Alexandria, Virginia 22313-1450
www.uspto.gov

APPLICATION NO.	FILING DATE	FIRST NAMED INVENTOR	ATTORNEY DOCKET NO.	CONFIRMATION NO.
13/036,651	02/28/2011	Nobuaki NAGAO	074782-0079	5359

53080 7590 05/03/2011
MCDERMOTT WILL & EMERY LLP
600 13TH STREET, NW
WASHINGTON, DC 20005-3096

EXAMINER

ART UNIT	PAPER NUMBER
2879	

MAIL DATE	DELIVERY MODE
05/03/2011	PAPER

Please find below and/or attached an Office communication concerning this application or proceeding.

The time period for reply, if any, is set in the attached communication.

UNITED STATES PATENT AND TRADEMARK OFFICE

Commissioner for Patents
United States Patent and Trademark Office
P.O. Box 1450
Alexandria, VA 22313-1450
www.uspto.gov

MCDERMOTT WILL & EMERY LLP
600 13TH STREET, NW
WASHINGTON DC 20005-3096

In re Application of	**: DECISION ON REQUEST TO**
NAGAO et al.	**: PARTICIPATE IN THE PATENT**
Application No.: 13/036,651	**: PROSECUTION HIGHWAY**
Filed: 28 February 2011	**: PROGRAM AND PETITION**
Attorney Docket No.: 074782-0079	**: TO MAKE SPECIAL UNDER**
For: LIGHT-EMITTING DIODE	**: 37 CFR 1.102(a)**
ELEMENT AND METHOD FOR	
FABRICATING THE SAME	

This is a decision on the request to participate in the Patent Prosecution Highway (PPH) program and the petition under 37 CFR 1.102(a), filed 21 April 2011 to make the above-identified application special.

The request and petition are **GRANTED**.

Discussion

A grantable request to participate in the PPH pilot program and petition to make special require:

1. The U.S. application is

    a. a Paris Convention application which either
        i. validly claims priority under 35 U.S.C. 119(a) and 37 CFR 1.55 to one or more applications filed in the JPO, or
        ii. validly claims priority to a PCT application that contains no priority claims, or
    b. a national stage application under the PCT (an application which entered the national stage in the U.S. from a PCT international application after compliance with 35 U.S.C. 371), which PCT application
        i. validly claims priority to an application filed in the JPO, or
        ii. validly claims priority to a PCT application that contains no priority claims, or
        iii. contains no priority claim, or
    c. a so-called bypass application filed under 35 U.S.C. 111(a) which validly claims benefit under 35 U.S.C. 120 to a PCT application, which PCT application
        i. validly claims priority to an application filed in the JPO, or
        ii. validly claims priority to a PCT application that contains no priority claims, or

iii. contains no priority claim;

2. Applicant must submit a copy of:
   a. The allowable/patentable claim(s) from the JPO application(s);
   b. An English translation of the allowable/patentable claim(s) and
   c. A statement that the English translation is accurate;
3. Applicant must:
   a. Ensure all the claims in the U.S. application must sufficiently correspond or be amended to sufficiently correspond to the allowable/patentable claim(s) in the JPO application(s) and
   b. Submit a claims correspondence table in English;
4. Examination of the U.S. application has not begun;
5. Applicant must submit:
   a. Documentation of prior office action:
      i. a copy of the office action(s) just prior to the "Decision to Grant a Patent" from each of the JPO application(s) containing the allowable/patentable claim(s) or
      ii. if the allowable/patentable claims(s) are from a "Notification of Reasons for Refusal" then the Notification of Reasons for Refusal or
      iii. if the JPO application is a first action allowance then no office action from the JPO is necessary should be indicated on the request/petition form;
   b. An English language translation of the JPO Office action from (5)(a)(i)-(ii) above
   c. A statement that the English translation is accurate (if the translation is not a machine translation provided by the JPO);
6. Applicant must submit:
   a. An IDS listing the documents cited by the JPO examiner in the JPO office action (unless already submitted in this application)
   b. Copies of the documents except U.S. patents or U.S. patent application publications (unless already submitted in this application);

The request to participate in the PPH pilot program and petition comply with the above requirements. Accordingly, the above-identified application has been accorded "special" status.

Inquiries concerning this decision should be directed to Lee W. Young at 571-272-4549.

All other inquiries concerning the examination or status of the application is accessible in the PAIR system at http://www.uspto.gov/ebc.index.html.

This application will be forwarded to the examiner for action on the merits commensurate with this decision once this application's formality reviews have been completed.

Lee W. Young
TQAS, Technology Center 2800 – Semiconductors
Electrical & Optical Systems & Components

UNITED STATES PATENT AND TRADEMARK OFFICE

Commissioner for Patents
United States Patent and Trademark Office
P.O. Box 1450
Alexandria, VA 22313-1450
www.uspto.gov

SPRINKLE IP LAW GROUP / ZIMMER
1301 W. 25TH STREET
SUITE 408
AUSTIN, TX 78705

MAILED

APR 17 2012

OFFICE OF PETITIONS

In re Application of
Karl Belliard, et al.
Application No. 13/036,705
Filed: February 28, 2011
Attorney Docket No. ZIMM1720-2

DECISION ON PETITION
TO WITHDRAW
FROM RECORD

This is a decision on the Request to Withdraw as attorney or agent of record under 37 C.F.R. § 1.36(b), filed February 25, 2012.

The request is **DISMISSED** as moot.

A review of the file record indicates that the power of attorney to Sprinkle IP Law Group / Zimmer has been revoked by the assignee of the patent application on February 21, 2012. Accordingly, the request to withdraw under 37 C.F.R. § 1.36(b) is moot.

All future communications from the Office will continue to be directed to the below-listed address until otherwise notified by applicant.

Telephone inquires concerning this decision should be directed to undersigned at 571-272-1642.

/AMW/
April M. Wise
Petitions Examiner
Office of Petitions

UNITED STATES PATENT AND TRADEMARK OFFICE

Commissioner for Patents
United States Patent and Trademark Office
P.O. Box 1450
Alexandria, VA 22313-1450
www.uspto.gov

MOTOROLA MOBILITY, INC
600 NORTH US HIGHWAY 45
W2-55BB
LIBERTYVILLE IL 60048-5343

MAILED
DEC 13 2011
OFFICE OF PETITIONS

In re Application of	:	
Mock et al.	:	
Application No. 13/036793	:	
Filing or 371(c) Date: 02/28/2011	:	ON PETITION
Attorney Docket Number:	:	
CE16008JUI C01	:	

This is a decision on the petition under 37 CFR 1.137(b), filed November 22, 2011, to revive the above-identified application.

This Petition is hereby **granted**.

The above-identified application became abandoned for failure to timely and properly reply to the non-final Office action, mailed May 16, 2011. The Office action set a three (3) month period for reply from the mail date of the Office action. Extensions of time were available under 37 CFR 1.136(a). No reply having been received, the application became abandoned on August 17, 2011.

Applicant files the present petition and includes an Amendment in reply to the Office action.

The petition satisfies the conditions for revival pursuant to the provisions of 37 CFR 1.137(b) in that (1) the reply in the form of an Amendment is filed with the present petition; (2) the petition fee; and (3) the required statement of unintentional delay. Accordingly, the reply is accepted as having been unintentionally delayed.

The application is being referred to Technology Center Art Unit 2617 for processing of the Amendment filed with the petition in due course.

Telephone inquiries concerning this decision should be directed to the undersigned at (571) 272-3232.

/DLW/

Derek L. Woods
Attorney
Office of Petitions

UNITED STATES PATENT AND TRADEMARK OFFICE

Commissioner for Patents
United States Patent and Trademark Office
P.O. Box 1450
Alexandria, VA 22313-1450
www.uspto.gov

HEMINGWAY & HANSEN, LLP
1717 MAIN STREET
COMERICA BANK TOWER- SUITE 2500
DALLAS TX 75201

MAILED
APR 14 2011
OFFICE OF PETITIONS

In re Application of	:	
Goodzeit et al.	:	
Application No. 13/036,805	:	ON PETITION
Filed: February 28, 2011		
Attorney Docket No. GOZT-P1004 CIP1US	:	
	:	

This is a decision on the petition under 37 CFR 1.102(c)(1), filed February 28, 2011, to make the above-identified application special based on applicant's age as set forth in M.P.E.P. § 708.02, Section IV.

The petition is **GRANTED**.

A grantable petition to make an application special under 37 CFR 1.102(c)(1) and MPEP § 708.02, Section IV: Applicant's Age must be accompanied by evidence showing that at least one of the applicants is 65 years of age, or more, such as a birth certificate or a statement by applicant. No fee is required

The instant petition includes a statement by applicant's attorney that applicant is 65 years of age and a statement from applicant that applicant is 65 years of age. Accordingly, the above-identified application has been accorded "special" status.

Telephone inquiries concerning this decision should be directed to the undersigned at 571-272-7751. All other inquiries concerning either the examination or status of the application should be directed to the Technology Center.

This matter is being referred to the Technology Center Art Unit for 2834 for action on the merits commensurate with this decision.

Joan Olszewski
Petitions Examiner
Office of Petitions

Doc code : PET.OP.AGE
Description : Petition to make special based on Age/Health

PTO/SB/130 (07-09)
Approved for use through 07/31/2012. OMB 0651- 0031
U.S. Patent and Trademark Office; U.S. DEPARTMENT OF COMMERCE
Under the Paperwork Reduction Act of 1995, no persons are required to respond to a collection of information unless it contains a valid OMB control number

PETITION TO MAKE SPECIAL BASED ON AGE FOR ADVANCEMENT OF EXAMINATION UNDER 37 CFR 1.102(c)(1)

Application Information

Application Number	13036820	Confirmation Number	5676	Filing Date	2911-02-28
Attorney Docket Number (optional)	IBC131US1	Art Unit	1644	Examiner	Huynh, Phuong N
First Named Inventor	Chien-Hsing Chang				
Title of Invention	Dock-and-Lock (DNL) Complexes for Therapeutic and Diagnostic Use				

Attention: Office of Petitions
An application may be made special for advancement of examination upon filing of a petition showing that the applicant is 65 years of age, or more. No fee is required with such a petition. See 37 CFR 1.102(c)(1) and MPEP 708.02 (IV).

APPLICANT HEREBY PETITIONS TO MAKE SPECIAL FOR ADVANCEMENT OF EXAMINATION IN THIS APPLICATION UNDER 37 CFR 1.102(c)(1) and MPEP 708.02 (IV) ON THE BASIS OF THE APPLICANT'S AGE.

A grantable petition requires one of the following items:
(1) Statement by one named inventor in the application that he/she is 65 years of age, or more; or
(2) Certification by a registered attorney/agent having evidence such as a birth certificate, passport, driver's license, etc. showing one named inventor in the application is 65 years of age, or more.

Name of Inventor who is 65 years of age, or older

Given Name	Middle Name	Family Name	Suffix
David	M.	Goldenberg	

A signature of the applicant or representative is required in accordance with 37 CFR 1.33 and 10.18.
Please see 37 CFR 1.4(d) for the format of the signature.

Select (1) or (2) :

○ (1) I am an inventor in this application and I am 65 years of age, or more.

◉ (2) I am an attorney or agent registered to practice before the Patent and Trademark Office, and I certify that I am in possession of evidence, and will retain such in the application file record, showing that the inventor listed above is 65 years of age, or more.

Signature	/Richard A. Nakashima/	Date (YYYY-MM-DD)	2011-06-14
Name	Richard A. Nakashima	Registration Number	42023

PTO/SB/130 (07-09)
Approved for use through 07/31/2012. OMB 0651- 0031
U.S. Patent and Trademark Office; U.S. DEPARTMENT OF COMMERCE
Under the Paperwork Reduction Act of 1995, no persons are required to respond to a collection of information unless it contains a valid OMB control number

Privacy Act Statement

The Privacy Act of 1974 (P.L. 93-579) requires that you be given certain information in connection with your submission of the attached form related to a patent application or patent. Accordingly, pursuant to the requirements of the Act, please be advised that: (1) the general authority for the collection of this information is 35 U.S.C. 2(b)(2); (2) furnishing of the information solicited is voluntary; and (3) the principal purpose for which the information is used by the U.S. Patent and Trademark Office is to process and/or examine your submission related to a patent application or patent. If you do not furnish the requested information, the U.S. Patent and Trademark Office may not be able to process and/or examine your submission, which may result in termination of proceedings or abandonment of the application or expiration of the patent.

The information provided by you in this form will be subject to the following routine uses:

1. The information on this form will be treated confidentially to the extent allowed under the Freedom of Information Act (5 U.S.C. 552) and the Privacy Act (5 U.S.C. 552a). Records from this system of records may be disclosed to the Department of Justice to determine whether the Fr eedom of Information Act requires disclosure of these records.

2. A record from this system of records may be disclosed, as a routine use, in the course of presenting evidence to a court, magistrate, or administrative tribunal, including disclosures to opposing counsel in the course of settlement negotiations.

3. A record in this system of records may be disclosed, as a routine use, to a Member of Congress submitting a request involving an individual, to whom the record pertains, when the individual has requested assistance from the Member with respect to the subject matter of the record.

4. A record in this system of records may be disclosed, as a routine use, to a contractor of the Agency having need for the information in order to perform a contract. Recipients of information shall be required to comply with the requirements of the Privacy Act of 1974, as amended, pursuant to 5 U.S.C. 552a(m).

5. A record related to an International Application filed under the Patent Cooperation Treaty in this system of records may be disclosed, as a routine use, to the International Bureau of the World Intellectual Property Organization, pursuant to the Patent Cooperation Treaty.

6. A record in this system of records may be disclosed, as a routine use, to another federal agency for purposes of National Security review (35 U.S.C. 181) and for review pursuant to the Atomic Energy Act (42 U.S.C. 218(c)).

7. A record from this system of records may be disclosed, as a routine use, to the Administrator, General Services, or his/her designee, during an inspection of records conducted by GSA as part of that agency's responsibility to recommend improvements in records management practices and programs, under authority of 44 U.S.C. 2904 and 2906. Such disclosure shall be made in accordance with the GSA regulations governing inspection of records for this purpose, and any other relevant (i.e., GSA or Commerce) directive. Such disclosure shall not be used to make determinations about indivi duals.

8. A record from this system of records may be disclosed, as a routine use, to the public after either publication of the application pursuant to 35 U.S.C. 122(b) or issuance of a patent pursuant to 35 U.S.C. 151. Further, a record may be disclosed, subject to the limitations of 37 CFR 1.14, as a routine use, to the public if the record was filed in an application which became abandoned or in which the proceedings were terminated and which application is referenced by either a published application, an application open to public inspections or an issued patent.

9. A record from this system of records may be disclosed, as a routine use, to a Federal, State, or local law enforcement agency, if the USPTO becomes aware of a violation or potential violation of law or regulation.

UNITED STATES PATENT AND TRADEMARK OFFICE

Commissioner for Patents
United States Patent and Trademark Office
P.O. Box 1450
Alexandria, VA 22313-1450
www.uspto.gov

In re Application of
Chien-Hsing Chang

Application No. 13036820

Filed: February 28,2011

Attorney Docket No. IBC131US1

:DECISION ON PETITION TO MAKE SPECIAL
:UNDER 37 CFR 1.102(c)(1)

This is a decision on the electronic petition under 37 CFR 1.102 (c)(1), filed 14-JUN-2011 to make the above-identified application special based on applicant's age as set forth in MPEP § 708.02, Section IV.

The petition is **GRANTED**.

A grantable petition to make an application special under 37 CFR 1.102(c)(1), MPEP § 708.02, Section IV: Applicant's Age must include a statement by applicant or a registered practitioner having evidence that applicant is at least 65 years of age. No fee is required.

Accordingly, the above-identified application has been accorded "special" status and will be taken up for action by the examiner upon the completion of all pre-examination processing.

Telephone inquiries concerning this electronic decision should be directed to the Electronic Business Center at 866-217-9197.

All other inquiries concerning either the examination or status of the application should be directed to the Technology Center.

PTO/SB/20PCT-KR (06-10)
Approved for use through 01/31/2012. OMB 0651-0058
U.S. Patent and Trademark Office; U. S. DEPARTMENT OF COMMERCE
Under the Paperwork Reduction Act of 1995, no persons are required to respond to a collection of information unless it displays a valid OMB control number.

REQUEST FOR PARTICIPATION IN THE PATENT COOPERATION TREATY - PATENT PROSECUTION HIGHWAY (PCT-PPH) PILOT PROGRAM BETWEEN THE KOREAN INTELLECTUAL PROPERTY OFFICE (KIPO) AND THE USPTO

Application No:	13/036,841	Filing date:	February 28, 2011
First Named Inventor:	Detleff KOLL		
Title of the Invention:	Clinical Data Reconciliation as Part of a Report Generation Solution		

THIS REQUEST FOR PARTICIPATION IN THE PCT-PPH PILOT PROGRAM ALONG WITH THE REQUIRED DOCUMENTS MUST BE SUBMITTED VIA EFS-WEB. INFORMATION REGARDING EFS-WEB IS AVAILABLE AT HTTP://WWW.USPTO.GOV/EBC/EFS_HELP.HTML

APPLICANT HEREBY REQUESTS PARTICIPATION IN THE PCT-PPH PROGRAM AND PETITIONS TO MAKE THE ABOVE-IDENTIFIED APPLICATION SPECIAL UNDER THE PCT-PPH PROGRAM.

The above-identified application is (1) a national stage entry of the corresponding PCT application, or (2) a national stage entry of another PCT application which claims priority to the corresponding PCT application, or (3) a national application that claims domestic/ foreign priority to the corresponding PCT application, or (4) a national application which forms the basis for the priority claim in the corresponding PCT application, or (5) a continuing application of a U.S. application that satisfies one of (1) to (4) above, or (6) a U.S. application that claims domestic benefit to a U.S. provisional application which forms the basis for the priority claim in the corresponding PCT application.

The corresponding PCT application number(s) is/are: PCT/US2011/026488

The international filing date of the corresponding PCT application(s) is/are: February 28, 2011

I. List of Required Documents:

a. **A copy of the latest international work product (WO/ISA, WO/IPEA, or IPER) in the above–identified corresponding PCT application(s)**

- [x] Is attached.
- [ ] Is not attached because the document is already in the U.S. application.

b. **A copy of all claims which were indicated as having novelty, inventive step and industrial applicability in the above-identified corresponding PCT application(s).**

- [x] Is attached.
- [ ] Is not attached because the document is already in the U.S. application.

c. **English translations of the documents in a. and b. above are attached (if the documents are not in the English language). A statement that the English translation is accurate is attached for the document in b. above.**

This collection of information is required by 35 U.S.C. 119, 37 CFR 1.55, and 37 CFR 1.102(d). The information is required to obtain or retain a benefit by the public, which is to file (and by the USPTO to process) an application. Confidentiality is governed by 35 U.S.C. 122 and 37 CFR 1.11 and 1.14. This collection is estimated to take 2 hours to complete, including gathering, preparing, and submitting the completed application form to the USPTO. Time will vary depending upon the individual case. Any comments on the amount of time you require to complete this form and/or suggestions for reducing this burden should be sent to the Chief Information Officer, U.S. Patent and Trademark Office, U.S. Department of Commerce, P.O. Box 1450, Alexandria, VA 22313-1450. DO NOT SEND FEES OR COMPLETED FORMS TO THIS ADDRESS.

Approved for use through 01/31/2012. OMB 0651-0058
U.S.Patent and Trademark Office; U.S. DEPARTMENT OF COMMERCE
Under the Paperwork Reduction Act of 1995, no persons are required to respond to a collection of information unless it displays a valid OMB control number.

REQUEST FOR PARTICIPATION IN THE PCT-PPH PILOT PROGRAM BETWEEN THE KIPO AND THE USPTO

(continued)

Application No.:	13/036,841
First Named Inventor:	Detlef KOLL

d. **(1) An information disclosure statement listing the documents cited in the international work products (ISR, WO/ISA, WO/IPEA, IPER) of the corresponding PCT application.**

☐ Is attached

☑ Has already been filed in the above-identified U.S. application on November 14, 2011

(2) Copies of all documents (except) for U.S. patents or U.S. patent application publications)

☐ Are attached.

☑ Have already been filed in the above-identified U.S. application on November 14, 2011

II. Claims Correspondence Table:

Claims in US Application	Patentable Claims in the corresponding PCT Application	Explanation regarding the correspondence
1-32	1-32	Claims 1-32 in the US application are identical to claims 1-32 in the PCT application.

III. All the claims in the US application sufficiently correspond to the patentable claims in the corresponding PCT application.

Signature /Robert Plotkin, Reg#43861/	Date January 2, 2012
Name (Print/Typed) Robert Plotkin, Esq.	Registration Number 43861

Privacy Act Statement

The **Privacy Act of 1974 (P.L. 93-579)** requires that you be given certain information in connection with your submission of the attached form related to a patent application or patent. Accordingly, pursuant to the requirements of the Act, please be advised that: (1) the general authority for the collection of this information is 35 U.S.C. 2(b)(2); (2) furnishing of the information solicited is voluntary; and (3) the principal purpose for which the information is used by the U.S. Patent and Trademark Office is to process and/or examine your submission related to a patent application or patent. If you do not furnish the requested information, the U.S. Patent and Trademark Office may not be able to process and/or examine your submission, which may result in termination of proceedings or abandonment of the application or expiration of the patent.

The information provided by you in this form will be subject to the following routine uses:

1. The information on this form will be treated confidentially to the extent allowed under the Freedom of Information Act (5 U.S.C. 552) and the Privacy Act (5 U.S.C 552a). Records from this system of records may be disclosed to the Department of Justice to determine whether disclosure of these records is required by the Freedom of Information Act.
2. A record from this system of records may be disclosed, as a routine use, in the course of presenting evidence to a court, magistrate, or administrative tribunal, including disclosures to opposing counsel in the course of settlement negotiations.
3. A record in this system of records may be disclosed, as a routine use, to a Member of Congress submitting a request involving an individual, to whom the record pertains, when the individual has requested assistance from the Member with respect to the subject matter of the record.
4. A record in this system of records may be disclosed, as a routine use, to a contractor of the Agency having need for the information in order to perform a contract. Recipients of information shall be required to comply with the requirements of the Privacy Act of 1974, as amended, pursuant to 5 U.S.C. 552a(m).
5. A record related to an International Application filed under the Patent Cooperation Treaty in this system of records may be disclosed, as a routine use, to the International Bureau of the World Intellectual Property Organization, pursuant to the Patent Cooperation Treaty.
6. A record in this system of records may be disclosed, as a routine use, to another federal agency for purposes of National Security review (35 U.S.C. 181) and for review pursuant to the Atomic Energy Act (42 U.S.C. 218(c)).
7. A record from this system of records may be disclosed, as a routine use, to the Administrator, General Services, or his/her designee, during an inspection of records conducted by GSA as part of that agency's responsibility to recommend improvements in records management practices and programs, under authority of 44 U.S.C. 2904 and 2906. Such disclosure shall be made in accordance with the GSA regulations governing inspection of records for this purpose, and any other relevant (*i.e.*, GSA or Commerce) directive. Such disclosure shall not be used to make determinations about individuals.
8. A record from this system of records may be disclosed, as a routine use, to the public after either publication of the application pursuant to 35 U.S.C. 122(b) or issuance of a patent pursuant to 35 U.S.C. 151. Further, a record may be disclosed, subject to the limitations of 37 CFR 1.14, as a routine use, to the public if the record was filed in an application which became abandoned or in which the proceedings were terminated and which application is referenced by either a published application, an application open to public inspection or an issued patent.
9. A record from this system of records may be disclosed, as a routine use, to a Federal, State, or local law enforcement agency, if the USPTO becomes aware of a violation or potential violation of law or regulation.

UNITED STATES PATENT AND TRADEMARK OFFICE

Commissioner for Patents
United States Patent and Trademark Office
P.O. Box 1450

MAILED

FEB 13 2012

OFFICE OF PETITIONS

ROBERT PLOTKIN, PC
15 New England Executive Office Park
Burlington MA 01803

In re Application of
Detlef KOLL
Application No. 13/036,841
Filed: February 28, 2011
Atty. Docket No.: M0002-1030
For: CLINICAL DATA RECONCILIATION AS PART OF A REPORT GENERATION SOLUTION

: DECISION ON REQUEST TO
: PARTICIPATE IN PCT-PPH PROGRAM
: AND PETITION TO MAKE SPECIAL
: UNDER 37 CFR 1.102(a)

This is a decision on the request to participate in the PCT Patent Prosecution Highway (PCT-PPH) program and the petition under 37 CFR 1.102(a), filed January 2, 2012, to make the above-identified application special.

The request is **GRANTED**.

A grantable request to participate in the PCT –PPH program and petition to make special under 37 CFR 1.102(a) require:

(1) the U.S. application must have an eligible relationship to one or more PCT application where the ISA or IPEA are the JPO, EPO, KIPO, IPAU, Russia, Spain, Finland, Austria, or USPTO;

(2) at least one claim in the PCT application has novelty, inventive step, and industrial applicability and must be free of any observations in Box VIII in the latest work product in the international stage or applicant must identify and explain why the claim(s) is/are not subject to the observation in Box VIII;

(3) applicant must submit a copy of the claim(s) from the PCT application(s) that have novelty, inventive step, and industrial applicability along with an English translation thereof and a statement that the English translation is accurate, if the claims are not in the English language;

(4) all the claims in the U.S. application must sufficiently correspond or be amended to sufficiently correspond to the claim(s) that have novelty, inventive step, and industrial applicability in the PCT application(s);

(5) examination of the U.S. application has not begun;

(6) applicant must submit a copy of the latest international work product from the PCT application indicating that the claim(s) have novelty, inventive step, and industrial applicability along with an English translation thereof;

(7) applicant must submit an IDS listing the documents cited by the PCT examiner in the international work product along with copies of documents except U.S. patents or U.S. patent application publications; and

(8) applicant is required to submit a claims correspondence table in English which indicates how all the claims in the U.S. application correspond to the claims indicated as having novelty, inventive step, and industrial applicability in the latest international work product.

The request to participate in the PCT-PPH program and petition comply with the above requirements. Accordingly, the above-identified application has been accorded "special" status.

Telephone inquiries concerning this decision should be directed to Robert DeWitty, Petitions Attorney, Office of Petitions (571-272-8427). All other inquiries concerning the examination or status of the application is accessible in the PAIR system at http://www.uspto.gov/ebc.index.html.

This application will be forwarded to Technology Center Art Unit 3626 for action commensurate with this decision.

David Bucci
Petitions Examiner
Office of Petitions

UNITED STATES PATENT AND TRADEMARK OFFICE

Commissioner for Patents
United States Patent and Trademark Office
P.O. Box 1450
Alexandria, VA 22313-1450
www.uspto.gov

In re Application of
THOMAS H. SHARPE

Application No. 13036888

Filed:

Attorney Docket No. 22113.08

:DECISION ON PETITION TO MAKE SPECIAL
:UNDER 37 CFR 1.102(c)(1)

This is a decision on the electronic petition under 37 CFR 1.102 (c)(1), filed 28-FEB-2011 to make the above-identified application special based on applicant's age as set forth in MPEP § 708.02, Section IV.

The petition is **GRANTED**.

A grantable petition to make an application special under 37 CFR 1.102(c)(1), MPEP § 708.02, Section IV: Applicant's Age must include a statement by applicant or a registered practitioner having evidence that applicant is at least 65 years of age. No fee is required.

Accordingly, the above-identified application has been accorded "special" status and will be taken up for action by the examiner upon the completion of all pre-examination processing.

Telephone inquiries concerning this electronic decision should be directed to the Electronic Business Center at 866-217-9197.

All other inquiries concerning either the examination or status of the application should be directed to the Technology Center.

UNITED STATES PATENT AND TRADEMARK OFFICE

Commissioner for Patents
United States Patent and Trademark Office
P.O. Box 1450
Alexandria, VA 22313-1450
www.uspto.gov

Paper No.

SIM & MCBURNEY
330 UNIVERSITY AVENUE
6TH FLOOR
TORONTO ON
M5G 1R7
CANADA

MAILED
MAY 16 2011
OFFICE OF PETITIONS

In re Application of	:	
Grant Gilmour	:	ON PETITION
Application No. 13/036,905	:	
Filed: February 28, 2011	:	
Atty Docket No. 2010-0001-01	:	
(CONT)	:	

This is in response to the "RESPONSE TO NOTICE OF INCOMPLETE APPLICATION" filed March 18, 2011, pursuant to 37 CFR 1.57(a) requesting that the above-referenced application be accorded a filing date of February 28, 2011. This petition is being treated pursuant to 37 CFR 1.53(e)(2)[1].

Application papers in the above-identified application were deposited on February 28, 2011. However, on March 11, 2011, the Office of Patent Application Processing mailed applicants a "Notice of Incomplete Nonprovisional Application," notifying applicants that the application papers had not been accorded a filing date because the application was deposited without drawings.

In response, applicant timely filed this petition. Applicant acknowledges that the drawings were inadvertently omitted from

[1] Any request for review of a notification pursuant to paragraph (e)(1) of this section, or a notification that the original application papers lack a portion of the specification or drawing(s), must be by way of a petition pursuant to this paragraph accompanied by the fee set forth in § 1.17(f). In the absence of a timely (§ 1.181(f)) petition pursuant to this paragraph, the filing date of an application in which the applicant was notified of a filing error pursuant to paragraph (e)(1) of this section will be the date the filing error is corrected.

the nonprovisional application. Applicant states that the drawings supplied on petition are the same drawings that were submitted October 26, 2010 in application No. 12,258,504, from which the instant application claims priority.

Applicant's arguments and evidence have been considered. It is noted that this application was properly filed as a continuation of application No. 12,258,504.

Nonetheless, it is controlling that a review of the application confirms that as filed the application contained at least one method claim. MPEP 601.01(f) provides that:

> It has been USPTO practice to treat an application that contains at least one process or method claim as an application for which a drawing is not necessary for an understanding of the invention under 35 U.S.C. 113 (first sentence).

Thus, pursuant to § 601.01(f), a drawing is not considered essential for a filing date. Thus, the application is entitled to a filing date without drawings present in the application.

Accordingly, the Office should have mailed a Notice of Omitted Items and not a Notice of Incomplete Nonprovisional Application. As stated in MPEP 601.01(g), if an application is entitled to a filing date, the mailing of a Notice of Omitted Items will permit *inter alia*:

> If an application was filed on or after September 21, 2004, and contains a claim under 37 CFR 1.55 for priority of a prior-filed foreign application, or a claim under 37 CFR 1.78 for the benefit of a prior-filed provisional, nonprovisional, or international application that was present on the filing date of the application, and the omitted portion of the drawing(s) was inadvertently omitted from the application and is completely contained in the prior-filed application, applicant may submit an amendment to include the inadvertently omitted portion of the drawing(s) pursuant to 37 CFR 1.57(a). The amendment should be submitted in response to the Office action and must comply with 37 CFR 1.57(a) and 37 CFR 1.121. See MPEP § 201.17.

Given that the application is entitled to a filing date, no petition pursuant to 37 CFR 1.57(a) is required. An amendment directed to the examiner to include the inadvertently omitted drawings must be filed to include the inadvertently omitted drawings. This amendment in compliance with §§ 1.57 and 1.121 should be filed within **TWO (2) MONTHS** of the mailing date of this decision. See 37 CFR 1.181(f), 37 CFR 1.57(f) and MPEP 608.01(p).

To the extent the instant petition requests a filing date of February 28, 2011 with no drawings present in the application, the petition is **GRANTED**.

Given the basis for granting this petition, the petition fee is being refunded to the Deposit Account, as authorized.

The Office of Patent Application Processing (OPAP) has been advised of this decision. Pursuant to this decision, the application has been referred to OPAP for:

- **according of a filing date of February 28, 2011**;
- **for indication in Office records, as appropriate, that "0" sheets of drawings were present on filing** and
- **for issuance of a filing receipt.**

Telephone inquiries concerning this matter may be directed to Senior Petitions Attorney, Nancy Johnson at (571) 272-3219.

Chris Bottorff
Petitions Examiner
Office of Petitions

UNITED STATES PATENT AND TRADEMARK OFFICE

UNITED STATES DEPARTMENT OF COMMERCE
United States Patent and Trademark Office
Address: COMMISSIONER FOR PATENTS
P.O. Box 1450
Alexandria, Virginia 22313-1450
www.uspto.gov

APPLICATION NO.	FILING DATE	FIRST NAMED INVENTOR	ATTORNEY DOCKET NO.	CONFIRMATION NO.
13/036,960	02/28/2011	Song Kaiwen Kelvin	SUTOSH.811AUS	5957

7590 02/08/2012
KNOBBE MARTENS OLSON & BEAR LLP
2040 MAIN STREET
FOURTEENTH FLOOR
IRVINE, CA 92614

EXAMINER
WU, XIAO MIN

ART UNIT	PAPER NUMBER
2628	

NOTIFICATION DATE	DELIVERY MODE
02/08/2012	ELECTRONIC

DECISION GRANTING PETITION UNDER 37 CFR 1.138(d)

The declaration of express abandonment is recognized

This is in response to the petition under 37 CFR 1.138(d), requesting for a refund of any previously paid search fee and excess claims fee in the above-identified application.

The petition is granted.

The express abandonment is recognized. Any previously paid search fee and excess claims fee are hereby refunded.

Telephone inquiries should be directed to the Office of Data Management at (571) 272-4200.

Betty Powell

Patent Publication Branch
Office of Data Management

FORM PET651G (Rev. 08/07)

UNITED STATES PATENT AND TRADEMARK OFFICE

Commissioner for Patents
United States Patent and Trademark Office
P.O. Box 1450
Alexandria, VA 22313-1450
www.uspto.gov

In re Application of
James Hogan

Application No. 13036962

Filed:

Attorney Docket No. JH1101

:DECISION ON PETITION TO MAKE SPECIAL
:UNDER 37 CFR 1.102(c)(1)

This is a decision on the electronic petition under 37 CFR 1.102 (c)(1), filed 01-MAR-2011 to make the above-identified application special based on applicant's age as set forth in MPEP § 708.02, Section IV.

The petition is **GRANTED**.

A grantable petition to make an application special under 37 CFR 1.102(c)(1), MPEP § 708.02, Section IV: Applicant's Age must include a statement by applicant or a registered practitioner having evidence that applicant is at least 65 years of age. No fee is required.

Accordingly, the above-identified application has been accorded "special" status and will be taken up for action by the examiner upon the completion of all pre-examination processing.

Telephone inquiries concerning this electronic decision should be directed to the Electronic Business Center at 866-217-9197.

All other inquiries concerning either the examination or status of the application should be directed to the Technology Center.

UNITED STATES PATENT AND TRADEMARK OFFICE

Commissioner for Patents
United States Patent and Trademark Office
P.O. Box 1450
Alexandria, VA 22313-1450
www.uspto.gov

In re Application of
Jorge A. Morando

Application No. 13037019

Filed:

Attorney Docket No. MJV-139-B-Cont

:DECISION ON PETITION TO MAKE SPECIAL
:UNDER 37 CFR 1.102(c)(1)

This is a decision on the electronic petition under 37 CFR 1.102 (c)(1), filed 03-MAR-2011 to make the above-identified application special based on applicant's age as set forth in MPEP § 708.02, Section IV.

The petition is **GRANTED**.

A grantable petition to make an application special under 37 CFR 1.102(c)(1), MPEP § 708.02, Section IV: Applicant's Age must include a statement by applicant or a registered practitioner having evidence that applicant is at least 65 years of age. No fee is required.

Accordingly, the above-identified application has been accorded "special" status and will be taken up for action by the examiner upon the completion of all pre-examination processing.

Telephone inquiries concerning this electronic decision should be directed to the Electronic Business Center at 866-217-9197.

All other inquiries concerning either the examination or status of the application should be directed to the Technology Center.

UNITED STATES PATENT AND TRADEMARK OFFICE

Commissioner for Patents
United States Patent and Trademark Office
P.O. Box 1450
Alexandria, VA 22313-1450
www.uspto.gov

Momkus McCluskey, LLC
1001 Warrenville Road, Suite 500
Lisle IL 60532

MAILED
AUG 24 2011
OFFICE OF PETITIONS

In re Application of	:	
Paul Ramsden	:	
Application No. 13/037,136	:	DECISION ON PETITION
Filed: February 28, 2011	:	TO WITHDRAW
Attorney Docket No. 4352.001011	:	FROM RECORD
	:	

This is a decision on the Request to Withdraw as attorney or agent of record under 37 C.F.R. § 1.36(b), filed August 12, 2011.

The request is **APPROVED**.

A grantable request to withdraw as attorney/agent of record must be signed by every attorney/agent seeking to withdraw or contain a clear indication that one attorney is signing on behalf of another/others. A request to withdraw will not be approved unless at least 30 (thirty) days would remain between the date of approval and the later of the expiration date of a time to file a response or the expiration date of the maximum time period which can be extended under 37 C.F.R. § 1.136(a).

The request was signed by Jefferson Perkins, sole attorney of record. Jefferson Perkins has been withdrawn.

The correspondence address has been changed and is copied below.

Telephone inquiries concerning this decision should be directed to Kimberly Inabinet at 571-272-4618.

/Kimberly Inabinet/

Kimberly Inabinet
Petitions Examiner
Office of Petitions

cc: Paul Ramsden
26 Villiage Street, Suite 2
Lisbon, ME 04250

UNITED STATES PATENT AND TRADEMARK OFFICE

UNITED STATES DEPARTMENT OF COMMERCE
United States Patent and Trademark Office
Address: COMMISSIONER FOR PATENTS
P.O. Box 1450
Alexandria, Virginia 22313-1450
www.uspto.gov

APPLICATION NUMBER	FILING OR 371(C) DATE	FIRST NAMED APPLICANT	ATTY. DOCKET NO./TITLE
13/037,136	02/28/2011	Paul RAMSDEN	4352.001011

CONFIRMATION NO. 6291

POWER OF ATTORNEY NOTICE

64770
Momkus McCluskey, LLC
1001 Warrenville Road, Suite 500
Lisle, IL 60532

OC000000049474952

Date Mailed: 08/23/2011

NOTICE REGARDING CHANGE OF POWER OF ATTORNEY

This is in response to the Power of Attorney filed 08/12/2011.

- The withdrawal as attorney in this application has been accepted. Future correspondence will be mailed to the new address of record. 37 CFR 1.33.

/kainabinet/

Office of Data Management, Application Assistance Unit (571) 272-4000, or (571) 272-4200, or 1-888-786-0101

UNITED STATES PATENT AND TRADEMARK OFFICE

Commissioner for Patents
United States Patent and Trademark Office
P.O. Box 1450
Alexandria, VA 22313-1450
www.uspto.gov

Decision Date : January 3, 2012

In re Application of :

PAT UNKEFER

Application No : 13037149

Filed : 28-Feb-2011

Attorney Docket No : 686522000500

DECISION ON REQUEST TO WITHDRAW AS ATTORNEY/AGENTOF RECORD

This is an electronic decision on the Request to Withdraw as attorney or agent of record under 37 CFR § 1.36(b), filed January 3, 2012

The request is **APPROVED.**

The request was signed by Michael Ward (registration no. 38651) on behalf of all attorneys/agents associated with Customer Number 11261 . All attorneys/agents associated with Cusotmer Number 11261 have been withdrawn.

Since there are no remaining attorneys of record, all future communications from the Office will be directed to the first named inventor or assignee that has properly made itself of record pursuant to 37 CFR 3.71, with correspondence address:

Name	Los Alamos National Security, LLC
Name2	c/o Bruce Cottrell
Address 1	LC/IP, MS A187
Address 2	Los Alamos National Laboratory
City	Los Alamos
State	NM
Postal Code	87545
Country	US

As a reminder, requester is required to inform the first named inventor or assignee that has properly made itself of record pursuant to 37 CFR 3.71 of the electronically processed petition.

Telephone inquiries concerning this decision should be directed to the Patent Electronic Business Center (EBC) at 866-217-9197.

Office of Petitions

Doc Code: PET.AUTO **Document Description: Petition automatically granted by EFS-Web**	PTO/SB/83 U.S. Patent and Trademark Office Department of Commerce

Electronic Petition Request	**REQUEST FOR WITHDRAWAL AS ATTORNEY OR AGENT AND CHANGE OF CORRESPONDENCE ADDRESS**
Application Number	13037149
Filing Date	28-Feb-2011
First Named Inventor	PAT UNKEFER
Art Unit	1638
Examiner Name	PHUONG BUI
Attorney Docket Number	686522000500
Title	TRANSGENIC ALGAE ENGINEERED FOR HIGHER PERFORMANCE

◉ Please withdraw me as attorney or agent for the above identified patent application and the practitioners of record associated with Customer Number: 11261

The reason(s) for this request are those described in 37 CFR:

10.40(b)(4)

Certifications

☒ I/We have given reasonable notice to the client, prior to the expiration of the response period, that the practitioner(s) intend to withdraw from employment

☒ I/We have delivered to the client or a duly authorized representative of the client all papers and property (including funds) to which the client is entitled

☒ I/We have notified the client of any responses that may be due and the time frame within which the client must respond

Change the correspondence address and direct all future correspondence to the first named inventor or assignee that has properly made itself of record pursuant to 37 CFR 3.71:

Name	Los Alamos National Security, LLC c/o Bruce Cottrell
Address	LC/IP, MS A187 Los Alamos National Laboratory
City	Los Alamos
State	NM
Postal Code	87545
Country	US

I am authorized to sign on behalf of myself and all withdrawing practitioners.	
Signature	/Michael Ward/
Name	Michael Ward
Registration Number	38651

UNITED STATES PATENT AND TRADEMARK OFFICE

UNITED STATES DEPARTMENT OF COMMERCE
United States Patent and Trademark Office
Address: COMMISSIONER FOR PATENTS
P.O. Box 1450
Alexandria, Virginia 22313-1450
www.uspto.gov

APPLICATION NO.	FILING DATE	FIRST NAMED INVENTOR	ATTORNEY DOCKET NO.	CONFIRMATION NO.
13/037,150	02/28/2011	Min Jae Jeong	67158/S1187	6324

7590 01/23/2012
CHRISTIE, PARKER & HALE, LLP
PO BOX 29001
Glendale, CA 91209-9001

EXAMINER
MILLER, MICHAEL G

ART UNIT	PAPER NUMBER
1712	

MAIL DATE	DELIVERY MODE
01/23/2012	PAPER

DECISION GRANTING PETITION UNDER 37 CFR 1.138(d)

The declaration of express abandonment is recognized

This is in response to the petition under 37 CFR 1.138(d), requesting for a refund of any previously paid search fee and excess claims fee in the above-identified application.

The petition is granted.

The express abandonment is recognized. Any previously paid search fee and excess claims fee are hereby refunded.

Telephone inquiries should be directed to the Office of Data Management at (571) 272-4200.

Mimi Jarmes

Patent Publication Branch
Office of Data Management

FORM PET651G (Rev. 08/07)

UNITED STATES PATENT AND TRADEMARK OFFICE

Commissioner for Patents
United States Patent and Trademark Office
P.O. Box 1450

MAILED
FEB 24 2012
OFFICE OF PETITIONS

KNOBBE MARTENS OLSON & BEAR LLP
2040 MAIN STREET
FOURTEENTH FLOOR
IRVINE CA 92614

In re Application of	: DECISION ON REQUEST TO
Hideo SHIRASAKA et al.	: PARTICIPATE IN PPH PROGRAM
Application No. 13/037,218	: AND PETITION TO MAKE SPECIAL
Filed: February 28, 2011	: UNDER 37 CFR 1.102(a)
Atty. Docket No.: KATOSH.096AUS	:
For: ELECTRONIC DEVICE	

This is a decision on the request to participate in the Patent Prosecution Highway (PPH) program and the petition under 37 CFR 1.102(a), filed January 20, 2011 to make the above-identified application special.

The petition is **DISMISSED**.

A grantable request to participate in the PPH (patent prosecution highway) program and petition to make special require:

(1) the U.S. application is a Paris Convention application which either validly claims priority under 35 U.S.C. 119(a) and 37 CFR 1.55 to one or more applications filed in the JPO (Japanese Patent Office) or claims priority to a PCT application that contains no priority claims. Alternatively, it can be a national stage application under the PCT which validly claims priority to an application filed in the JPO or claims priority to a PCT application that contains no priority claims. It can also be a "bypass application" filed under 35 U.S.C. 111(a) which validly claims benefit under 35 U.S.C. 120 to a PCT application, which PCT application validly claims priority to an application filed in the JPO or claims priority to a PCT application that contains no priority claims, or contains no priority claim;

(2) applicant must submit a copy of the allowable/patentable claim(s) from the JPO application(s) along with an English translation thereof and a statement that the English translation is accurate;

(3) all the claims in the U.S. application must sufficiently correspond or be amended to sufficiently correspond to the allowable/patentable claim(s) in the JPO application(s);

(4) examination of the U.S. application has not begun;

(5) applicant must submit a copy of all the office actions from each of the JPO application(s) containing the allowability/patentable claim(s) along with an English translation thereof and a statement that the English translation is accurate; and

(6) applicant must submit an IDS listing the documents cited by the JPO examiner in the JPO office action along with copies of documents except U.S. patents or U.S. patent application publications.

Requirements (1) to (2) and (4) to (6) above are considered to have been met. However, the request to participate in the PPH program and petition fail to meet requirement (3).

Regarding requirement (3), the claims in the U.S. application apparently do not correspond to the claims in the JPO application.

Applicant is given **ONE** opportunity with a time period of **ONE MONTH** or **THIRTY DAYS**, whichever is longer, from the mailing date of this decision to correct the deficiencies. **NO EXTENSION OF TIME UNDER 37 CFR 1.136 IS PERMITTED**. If the deficiencies are not corrected within the time period given, the application will await action in its regular turn.

Response must be filed via the Electronic Filing System (EFS) using the document description: Petition to make special under Patent Pros. Hwy. Any preliminary amendments and IDS submitted with the PPH documents must be separately indexed as a preliminary amendment and IDS, respectively.

Telephone inquiries concerning this decision should be directed to Robert DeWitty, Petition Attorney, Office of Petitions at 571-272-8427.

All other inquiries concerning the examination or status of the application is accessible in the PAIR system at http://www.uspto.gov/ebc/index.html.

David Bucci
Petitions Examiner
Office of Petitions

UNITED STATES PATENT AND TRADEMARK OFFICE

Commissioner for Patents
United States Patent and Trademark Office
P.O. Box 1450

MAILED
APR 11 2012
OFFICE OF PETITIONS

KNOBBE MARTENS OLSON & BEAR LLP
2040 MAIN STREET
FOURTEENTH FLOOR
IRVINE CA 92614

In re Application of	: DECISION ON REQUEST TO
Hideo SHIRASAKA et al.	: PARTICIPATE IN PPH PROGRAM
Application No. 13/037,218	: AND PETITION TO MAKE SPECIAL
Filed: February 28, 2011	: UNDER 37 CFR 1.102(a)
Atty. Docket No.: KATOSH.096AUS	:
For: ELECTRONIC DEVICE	

This is a decision on the renewed request to participate in the Patent Prosecution Highway (PPH) program and the petition under 37 CFR 1.102(a), filed March 23, 2012 to make the above-identified application special.

The petition and request are **GRANTED**.

A grantable request to participate in the PPH (patent prosecution highway) program and petition to make special require:

(1) the U.S. application is a Paris Convention application which either validly claims priority under 35 U.S.C. 119(a) and 37 CFR 1.55 to one or more applications filed in the JPO (Japanese Patent Office) or claims priority to a PCT application that contains no priority claims. Alternatively, it can be a national stage application under the PCT which validly claims priority to an application filed in the JPO or claims priority to a PCT application that contains no priority claims. It can also be a "bypass application" filed under 35 U.S.C. 111(a) which validly claims benefit under 35 U.S.C. 120 to a PCT application, which PCT application validly claims priority to an application filed in the JPO or claims priority to a PCT application that contains no priority claims, or contains no priority claim;

(2) applicant must submit a copy of the allowable/patentable claim(s) from the JPO application(s) along with an English translation thereof and a statement that the English translation is accurate;

(3) all the claims in the U.S. application must sufficiently correspond or be amended to sufficiently correspond to the allowable/patentable claim(s) in the JPO application(s);

(4) examination of the U.S. application has not begun;

(5) applicant must submit a copy of all the office actions from each of the JPO application(s) containing the allowability/patentable claim(s) along with an English translation thereof and a statement that the English translation is accurate; and

(6) applicant must submit an IDS listing the documents cited by the JPO examiner in the JPO office action along with copies of documents except U.S. patents or U.S. patent application publications.

The request to participate in the PPH program and petition comply with the above requirements. Accordingly, the above-identified application has been accorded "special" status.

Telephone inquiries concerning this decision should be directed to Robert DeWitty, Petition Attorney, Office of Petitions at 571-272-8427.

All other inquiries concerning the examination or status of the application is accessible in the PAIR system at http://www.uspto.gov/ebc/index.html.

This application will be forwarded to Technology Center Art Unit 2835 for action commensurate with this decision.

David Bucci
Petitions Examiner
Office of Petitions

UNITED STATES PATENT AND TRADEMARK OFFICE

Commissioner for Patents
United States Patent and Trademark Office
P.O. Box 1450
Alexandria, VA 22313-1450
www.uspto.gov

PEPPER HAMILTON LLP
400 BERWYN PARK
899 CASSATT ROAD
BERWYN PA 19312

MAILED
NOV 17 2011
OFFICE OF PETITIONS

Applicants: Lahm, et al.
Appl. No.: 13/037,257
Filing Date: February 28, 2011
Title: 5-ARYL ISOXAZOLINES FOR CONTROLLING INVERTEBRATE PESTS
Attorney Docket: 137738.00111
Pub. No.: US 20110152081 A1
Pub. Date: June 23, 2011

This is a decision on the request for a corrected patent application publication under 37 CFR 1.221(b), received on August 23, 2011, for the above-identified application.

The request is granted.

The corrected patent application publication will be published in due course, unless the patent issues before the application is republished.

Inquiries relating to this matter may be directed to Karen Creasy at (571) 272-3208.

/Christopher Bottorff/

Christopher Bottorff
Petitions Examiner
Office of Petitions

Doc code : PET.OP.AGE
Description : Petition to make special based on Age/Health

PTO/SB/130 (07-09)
Approved for use through 07/31/2012. OMB 0651- 0031
U.S. Patent and Trademark Office; U.S. DEPARTMENT OF COMMERCE
Under the Paperwork Reduction Act of 1995, no persons are required to respond to a collection of information unless it contains a valid OMB control number

PETITION TO MAKE SPECIAL BASED ON AGE FOR ADVANCEMENT OF EXAMINATION UNDER 37 CFR 1.102(c)(1)

Application Information

Application Number	13/037,303	Confirmation Number	6611	Filing Date	2011-02-28
Attorney Docket Number (optional)	CLEM201.3US	Art Unit	2622	Examiner	LIN YE
First Named Inventor	FRANK CLEMENTE				
Title of Invention	INTERNET DIRECT DEVICE				

Attention: Office of Petitions
An application may be made special for advancement of examination upon filing of a petition showing that the applicant is 65 years of age, or more. No fee is required with such a petition. See 37 CFR 1.102(c)(1) and MPEP 708.02 (IV).

APPLICANT HEREBY PETITIONS TO MAKE SPECIAL FOR ADVANCEMENT OF EXAMINATION IN THIS APPLICATION UNDER 37 CFR 1.102(c)(1) and MPEP 708.02 (IV) ON THE BASIS OF THE APPLICANT'S AGE.

A grantable petition requires one of the following items:
(1) Statement by one named inventor in the application that he/she is 65 years of age, or more; or
(2) Certification by a registered attorney/agent having evidence such as a birth certificate, passport, driver's license, etc. showing one named inventor in the application is 65 years of age, or more.

Name of Inventor who is 65 years of age, or older

Given Name	Middle Name	Family Name	Suffix
THEODORE		FEASER	

A signature of the applicant or representative is required in accordance with 37 CFR 1.33 and 10.18.
Please see 37 CFR 1.4(d) for the format of the signature.

Select (1) or (2) :

○ (1) I am an inventor in this application and I am 65 years of age, or more.

● (2) I am an attorney or agent registered to practice before the Patent and Trademark Office, and I certify that I am in possession of evidence, and will retain such in the application file record, showing that the inventor listed above is 65 years of age, or more.

Signature	/C. ANDREW IM/	Date (YYYY-MM-DD)	2011-09-12
Name	C. ANDREW IM	Registration Number	40657

PTO/SB/130 (07-09)
Approved for use through 07/31/2012. OMB 0651- 0031
U.S. Patent and Trademark Office; U.S. DEPARTMENT OF COMMERCE
Under the Paperwork Reduction Act of 1995, no persons are required to respond to a collection of information unless it contains a valid OMB control number

Privacy Act Statement

The Privacy Act of 1974 (P.L. 93-579) requires that you be given certain information in connection with your submission of the attached form related to a patent application or patent. Accordingly, pursuant to the requirements of the Act, please be advised that: (1) the general authority for the collection of this information is 35 U.S.C. 2(b)(2); (2) furnishing of the information solicited is voluntary; and (3) the principal purpose for which the information is used by the U.S. Patent and Trademark Office is to process and/or examine your submission related to a patent application or patent. If you do not furnish the requested information, the U.S. Patent and Trademark Office may not be able to process and/or examine your submission, which may result in termination of proceedings or abandonment of the application or expiration of the patent.

The information provided by you in this form will be subject to the following routine uses:

1. The information on this form will be treated confidentially to the extent allowed under the Freedom of Information Act (5 U.S.C. 552) and the Privacy Act (5 U.S.C. 552a). Records from this system of records may be disclosed to the Department of Justice to determine whether the Fr eedom of Information Act requires disclosure of these records.

2. A record from this system of records may be disclosed, as a routine use, in the course of presenting evidence to a court, magistrate, or administrative tribunal, including disclosures to opposing counsel in the course of settlement negotiations.

3. A record in this system of records may be disclosed, as a routine use, to a Member of Congress submitting a request involving an individual, to whom the record pertains, when the individual has requested assistance from the Member with respect to the subject matter of the record.

4. A record in this system of records may be disclosed, as a routine use, to a contractor of the Agency having need for the information in order to perform a contract. Recipients of information shall be required to comply with the requirements of the Privacy Act of 1974, as amended, pursuant to 5 U.S.C. 552a(m).

5. A record related to an International Application filed under the Patent Cooperation Treaty in this system of records may be disclosed, as a routine use, to the International Bureau of the World Intellectual Property Organization, pursuant to the Patent Cooperation Treaty.

6. A record in this system of records may be disclosed, as a routine use, to another federal agency for purposes of National Security review (35 U.S.C. 181) and for review pursuant to the Atomic Energy Act (42 U.S.C. 218(c)).

7. A record from this system of records may be disclosed, as a routine use, to the Administrator, General Services, or his/her designee, during an inspection of records conducted by GSA as part of that agency's responsibility to recommend improvements in records management practices and programs, under authority of 44 U.S.C. 2904 and 2906. Such disclosure shall be made in accordance with the GSA regulations governing inspection of records for this purpose, and any other relevant (i.e., GSA or Commerce) directive. Such disclosure shall not be used to make determinations about indivi duals.

8. A record from this system of records may be disclosed, as a routine use, to the public after either publication of the application pursuant to 35 U.S.C. 122(b) or issuance of a patent pursuant to 35 U.S.C. 151. Further, a record may be disclosed, subject to the limitations of 37 CFR 1.14, as a routine use, to the public if the record was filed in an application which became abandoned or in which the proceedings were terminated and which application is referenced by either a published application, an application open to public inspections or an issued patent.

9. A record from this system of records may be disclosed, as a routine use, to a Federal, State, or local law enforcement agency, if the USPTO becomes aware of a violation or potential violation of law or regulation.

UNITED STATES PATENT AND TRADEMARK OFFICE

Commissioner for Patents
United States Patent and Trademark Office
P.O. Box 1450
Alexandria, VA 22313-1450
www.uspto.gov

In re Application of
FRANK CLEMENTE

Application No. 13037303

Filed: February 28,2011

Attorney Docket No. CLEM201.3US

:DECISION ON PETITION TO MAKE SPECIAL
:UNDER 37 CFR 1.102(c)(1)

This is a decision on the electronic petition under 37 CFR 1.102 (c)(1), filed 12-SEP-2011 to make the above-identified application special based on applicant's age as set forth in MPEP § 708.02, Section IV.

The petition is **GRANTED**.

A grantable petition to make an application special under 37 CFR 1.102(c)(1), MPEP § 708.02, Section IV: Applicant's Age must include a statement by applicant or a registered practitioner having evidence that applicant is at least 65 years of age. No fee is required.

Accordingly, the above-identified application has been accorded "special" status and will be taken up for action by the examiner upon the completion of all pre-examination processing.

Telephone inquiries concerning this electronic decision should be directed to the Electronic Business Center at 866-217-9197.

All other inquiries concerning either the examination or status of the application should be directed to the Technology Center.

UNITED STATES PATENT AND TRADEMARK OFFICE

Commissioner for Patents
United States Patent and Trademark Office
P.O. Box 1450
Alexandria, VA 22313-1450
www.uspto.gov

DOUGLAS L WELLER
431 MAGNOLIA LANE
SANTA CLARA, CA 95051

MAILED
AUG 15 2011
OFFICE OF PETITIONS

In re Application of
Catherine LIN-HENDEL
Application No. 13/037,356
Filed: February 28, 2011
Attorney Docket No. **LHO13CON2**

DECISION ON PETITION TO WITHDRAW FROM RECORD

This is a decision on the Request to Withdraw as attorney or agent of record under 37 C.F.R. § 1.36(b), filed July 19, 2011.

The request is **APPROVED**.

A grantable request to withdraw as attorney/agent of record must be signed by every attorney/agent seeking to withdraw or contain a clear indication that one attorney is signing on behalf of another/others.

The request was signed by Douglas L. Weller, the sole attorney of record. Douglas L. Weller
has been withdrawn as attorney or agent of record. Applicant is reminded that there is no attorney of record at this time.

All future communications from the Office will be directed to the sole named signing inventor at the address below until otherwise properly notified by the applicant.

Telephone inquiries concerning this decision should be directed to the undersigned at 571-272-7253.

/Monica A. Graves/
Petitions Examiner, Office of Petitions

cc: **CATHERINE LIN-HENDEL**
18850 BLYTHSWOOD DRIVE
LOS GATOS, CA 95030

PTO/SB/83 (11-08)
Approved for use through 11/30/2011. OMB 0651-0035
U.S. Patent and Trademark Office, U.S. DEPARTMENT OF COMMERCE
Under the Paperwork Reduction Act of 1995, no persons are required to respond to a collection of information unless it displays a valid OMB control number.

REQUEST FOR WITHDRAWAL AS ATTORNEY OR AGENT AND CHANGE OF CORRESPONDENCE ADDRESS

Complete the following section only when the correspondence address will change. *Changes of address will only be accepted to an inventor or an assignee that has properly made itself of record pursuant to 37 CFR 3.71.*

Change the correspondence address and direct all future correspondence to:

A. ☐ The address of the inventor or assignee associated with Customer Number: _____

OR

B. ☑ Inventor or Assignee name	Catherine Lin-Hendel		
Address 18850 Blythswood Drive			
City Los Gatos	State CA	Zip 95030	Country USA
Telephone 408 354 6273		Email linhendel@gmail.com	

I am authorized to sign on behalf of myself and all withdrawing practitioners.

Signature	/Douglas L Weller/		
Name	Douglas L. Weller	Registration No. 30,506	
Address 431 Magnolia Lane			
City Santa Clara	State CA	Zip 95051	Country USA
Date	July 20, 2011	Telephone No. 408 985 0642	

NOTE: ***Withdrawal is effective when approved rather than when received.***

This collection of information is required by 37 CFR 1.36. The information is required to obtain or retain a benefit by the public which is to file (and by the USPTO to process) an application. Confidentiality is governed by 35 U.S.C. 122 and 37 CFR 1.11 and 1.14. This collection is estimated to take 12 minutes to complete, including gathering, preparing, and submitting the completed application form to the USPTO. Time will vary depending upon the individual case. Any comments on the amount of time you require to complete this form and/or suggestions for reducing this burden, should be sent to the Chief Information Officer, U.S. Patent and Trademark Office, U.S. Department of Commerce, P.O. Box 1450, Alexandria, VA 22313-1450. DO NOT SEND FEES OR COMPLETED FORMS TO THIS ADDRESS. **SEND TO: Commissioner for Patents, P.O. Box 1450, Alexandria, VA 22313-1450.**

If you need assistance in completing the form, call 1-800-PTO-9199 and select option 2.

Doc Code: PET.AUTO Document Description: Petition automatically granted by EFS-Web	PTO/SB/140 U.S. Patent and Trademark Office Department of Commerce

Electronic Petition Request	**PETITION TO WITHDRAW AN APPLICATION FROM ISSUE AFTER PAYMENT OF THE ISSUE FEE UNDER 37 CFR 1.313(c)**
Application Number	13037392
Filing Date	01-Mar-2011
First Named Inventor	Harue NAKASHIMA
Art Unit	1786
Examiner Name	GREGORY CLARK
Attorney Docket Number	0756-9175
Title	CARBAZOLE DERIVATIVE, AND LIGHT EMITTING ELEMENT AND LIGHT EMITTING DEVICE USING THE CARBAZOLE DERIVATIVE

An application may be withdrawn from issue for further action upon petition by the applicant. To request that the Office withdraw an application from issue, applicant must file a petition under this section including the fee set forth in § 1.17(h) and a showing of good and sufficient reasons why withdrawal of the application from issue is necessary.

APPLICANT HEREBY PETITIONS TO WITHDRAW THIS APPLICATION FROM ISSUE UNDER 37 CFR 1.313(c).

A grantable petition requires the following items:
(1) Petition fee; and
(2) One of the following reasons:
(a) Unpatentability of one or more claims, which must be accompanied by an unequivocal statement that one or more claims are unpatentable, an amendment to such claim or claims, and an explanation as to how the amendment causes such claim or claims to be patentable;
(b) Consideration of a request for continued examination in compliance with § 1.114 (for a utility or plant application only); or
(c) Express abandonment of the application. Such express abandonment may be in favor of a continuing application, but not a CPA under 37 CFR 1.53(d).

Petition Fee

☐ Applicant claims SMALL ENTITY status. See 37 CFR 1.27.

☐ Applicant is no longer claiming SMALL ENTITY status. See 37 CFR 1.27(g)(2).

☐ Applicant(s) status remains as SMALL ENTITY.

☒ Applicant(s) status remains as other than SMALL ENTITY

Reason for withdrawal from issue

○ One or more claims are unpatentable

◉ Consideration of a request for continued examination (RCE) (List of Required Documents and Fees)

○ Applicant hereby expressly abandons the instant application (any attorney/agent signing for this reason must have power of attorney pursuant to 37 CFR 1.32(b)).

RCE request,submission, and fee.

☐ I certify, in accordance with 37 CFR 1.4(d)(4) that : The RCE request ,submission, and fee have already been filed in the above-identified application on

☒ Are attached.

THIS PORTION MUST BE COMPLETED BY THE SIGNATORY OR SIGNATORIES

I certify, in accordance with 37 CFR 1.4(d)(4) that I am:

◉ An attorney or agent registered to practice before the Patent and Trademark Office who has been given power of attorney in this application.

○ An attorney or agent registered to practice before the Patent and Trademark Office, acting in a representative capacity.

○ A sole inventor

○ A joint inventor; I certify that I am authorized to sign this submission on behalf of all of the inventors

○ A joint inventor; all of whom are signing this e-petition

○ The assignee of record of the entire interest that has properly made itself of record pursuant to 37 CFR 3.71

Signature	/Eric J. Robinson/
Name	Eric J. Robinson
Registration Number	38285

UNITED STATES PATENT AND TRADEMARK OFFICE

Commissioner for Patents
United States Patent and Trademark Office
P.O. Box 1450
Alexandria, VA 22313-1450
www.uspto.gov

Decision Date : March 13, 2012

In re Application of :

Harue NAKASHIMA

DECISION ON PETITION

UNDER CFR 1.313(c)(2)

Application No : 13037392

Filed : 01-Mar-2011

Attorney Docket No : 0756-9175

This is an electronic decision on the petition under 37 CFR 1.313(c)(2), filed March 13, 2012 , to withdraw the above-identified application from issue after payment of the issue fee.

The petition is **GRANTED.**

The above-identified application is withdrawn from issue for consideration of a submission under 37 CFR 1.114 (request for continued examination). See 37 CFR 1.313(c)(2).

Petitioner is advised that the issue fee paid in this application cannot be refunded. If, however, this application is again allowed, petitioner may request that it be applied towards the issue fee required by the new Notice of Allowance.

Telephone inquiries concerning this decision should be directed to the Patent Electronic Business Center (EBC) at 866-217-9197.

This application file is being referred to Technology Center AU 1786 for processing of the request for continuing examination under 37 CFR 1.114 .

Office of Petitions

UNITED STATES PATENT AND TRADEMARK OFFICE

UNITED STATES DEPARTMENT OF COMMERCE
United States Patent and Trademark Office
Address: COMMISSIONER FOR PATENTS
P.O. Box 1450
Alexandria, Virginia 22313-1450
www.uspto.gov

APPLICATION NO.	FILING DATE	FIRST NAMED INVENTOR	ATTORNEY DOCKET NO.	CONFIRMATION NO.
13/037,418		Christian Becker	2009P18387US	6839

22116 7590 03/04/2011
SIEMENS CORPORATION
INTELLECTUAL PROPERTY DEPARTMENT
170 WOOD AVENUE SOUTH
ISELIN, NJ 08830

EXAMINER	
ART UNIT	PAPER NUMBER
3745	

MAIL DATE	DELIVERY MODE
03/04/2011	PAPER

Please find below and/or attached an Office communication concerning this application or proceeding.

The time period for reply, if any, is set in the attached communication.

UNITED STATES PATENT AND TRADEMARK OFFICE

Commissioner for Patents
United States Patent and Trademark Office
P.O. Box 1450
Alexandria, VA 22313-1450
www.uspto.gov

SIEMENS CORPORATION
INTELLECTUAL PROPERTY DEPARTMENT
170 WOOD AVENUE SOUTH
ISELIN NJ 08830

In re Application of	:
BECKER, CHRISTIAN	: DECISION ON REQUEST TO
Application No. 13/037,418	: PARTICIPATE IN PATENT
Filed: march 1, 2011	: PROSECUTION HIGHWAY
Attorney Docket No. 200P18387US	: PILOT PROGRAM AND PETITION
For: WIND TURBINE WITH LIQUID MEDIUM	: TO MAKE SPECIAL UNDER
DISTRIBUTION SYSTEM	: 37 CFR 1.102(a)

This is a decision on the renewed request to participate in the Patent Prosecution Highway (PPH) program and the petition under 37 CFR 1.102(a), filed March 3, 2011 to make the above-identified application special.

The request and petition are granted.

A grantable request to participate in the PPH program and petition to make special require:
(1) The U.S. application must disclose an eligible relationship to one or more PCT applications filed in the JPO, EPO, KIPO or USPTO;
(2) Applicant must submit a copy of the allowable/patentable claim(s) from the PCT application(s) latest international work product (the written opinion or the IPER) along with an English translation thereof and a statement that the English translation is accurate;
(3) All the claims in the U.S. application must sufficiently correspond or be amended to sufficiently correspond to the allowable/patentable claim(s) in the PCT application(s);
(4) Examination of the U.S. application has not begun;
(5) Applicant must submit a copy of the latest international work product from the PCT application containing the allowable/patentable claim(s) along with an English translation thereof and a statement that the English translation is accurate; and
(6) Applicant must submit an IDS listing the documents cited by the PCT examiner in the international work product along with copies of documents except U.S. patents or U.S. patent application publications.

In light of the petition being properly submitted, the request to participate in the PPH program and the petition comply with the above requirements. Accordingly, the above-identified application has been accorded "special" status.

The applicant is encouraged to cite and submit all relevant prior art references, if any, to facilitate examination in this application.

Other inquiries concerning the examination or status of the application should be directed to Edward Look, the SPE of Art Unit 3745 at 571-272-4820 for Class 416/11 and also accessible in the PAIR system at http://www.uspto.gov/ebc.index.html.

All other inquiries concerning the examination or status of the application should be directed to the Patent Application Information Retrieval (PAIR) system.

This application is currently undergoing pre-examination processing. Upon completion, the application will be forwarded and docketed to an examiner for action on the merits commensurate with this decision.

Telephone inquiries concerning this decision should be directed to Henry C. Yuen, at 571-272-4856.

The petition is **granted.**

/Henry C. Yuen/

Henry C. Yuen, Special Programs Examiner
Technology Center 3700 – Mechanical Engineering,
Manufacturing and Products
571-272-4856

UNITED STATES PATENT AND TRADEMARK OFFICE

Commissioner for Patents
United States Patent and Trademark Office
P.O. Box 1450
Alexandria, VA 22313-1450
www.uspto.gov

Avery Dennison Corporation
Amanda Wittine
8080 Norton Parkway
22-D
Mentor OH 44060

MAILED
DEC 20 2011
OFFICE OF PETITIONS

In re Application of	:	
HOLBERT et al.	:	DECISION ON PETITION
Application No. 13/037,500	:	
Filed: 03/01/2011	:	
Attorney Docket No. 4836-US	:	

This is a decision on the petition under 37 CFR 1.137(b), filed December 5, 2011, to revive the above-identified application.

The application became abandoned for failure to reply in a timely manner to the Notice to File Missing Parts of Nonprovisional Application (Notice) mailed March 17, 2011. The Notice set a period for reply of two (2) months from the mail date of the Notice. No extensions of time for response under the provisions of 37 CFR 1.136(a) were obtained. Accordingly, the application became abandoned on May 18, 2011. A Notice of Abandonment was mailed on November 30, 2011.

Petitioner has met the requirements to revive the above-identified application pursuant to 37 CFR 1.137(b). Petitioner submitted the required reply, paid the petition fee, and made the proper statement of unintentional delay.

Accordingly, the petition is **GRANTED.**

The Office notes that a request for an extension of time under 37 CFR 1.136 must be filed prior to the expiration of the maximum extendable period for reply. See In re Application of S., 8 USPQ2d 1630, 1631 (Comm'r Pats. 1988). As the $1270.00 extension of time fee submitted with the petition was submitted after the six-month maximum statutory period for reply, this fee is unnecessary and will be refunded.

This matter is being referred to the Office of Patent Application Processing.

Telephone inquiries specific to this decision may be directed to the undersigned at (571) 272-3211.

/Christina Tartera Donnell/

Christina Tartera Donnell
Senior Petitions Attorney
Office of Petitions

UNITED STATES PATENT AND TRADEMARK OFFICE

UNITED STATES DEPARTMENT OF COMMERCE
United States Patent and Trademark Office
Address: COMMISSIONER FOR PATENTS
P.O. Box 1450
Alexandria, Virginia 22313-1450
www.uspto.gov

APPLICATION NO.	FILING DATE	FIRST NAMED INVENTOR	ATTORNEY DOCKET NO.	CONFIRMATION NO.
13/037,609	03/01/2011	Yutaka Ito	4605-103886	7203

28289 7590 06/08/2011
THE WEBB LAW FIRM, P.C.
ONE GATEWAY CENTER
420 FT. DUQUESNE BLVD, SUITE 1200
PITTSBURGH, PA 15222

EXAMINER
BARRY, CHESTER T

ART UNIT	PAPER NUMBER
1778	

NOTIFICATION DATE	DELIVERY MODE
06/08/2011	ELECTRONIC

Please find below and/or attached an Office communication concerning this application or proceeding.

The time period for reply, if any, is set in the attached communication.

Notice of the Office communication was sent electronically on above-indicated "Notification Date" to the following e-mail address(es):

patents@webblaw.com

UNITED STATES PATENT AND TRADEMARK OFFICE

Commissioner for Patents
United States Patent and Trademark Office
P.O. Box 1450
Alexandria, VA 22313-1450
www.uspto.gov

June 7, 2011 WG

In re application of Yutaka Ito et al. Serial No. 13/037,609 Filed: March 1, 2011 For: METHOD AND APPARATUS FOR GENERATING FRESH WATER, AND METHOD AND APPARATUS FOR DESALINATING SEA WATER	:	DECISION ON REQUEST TO PARTICIPATE IN PATENT PROSECUTION HIGHWAY PROGRAM AND PETITION TO MAKE UNDER 37 CFR 1.102(a)

This is a decision on the request to participate in the Patent Prosecution Highway (PPH) program and the petition under 37 CFR 1.102(a) to make the above-identified application special filed March 14, 2011.

The request and petition are **GRANTED**.

A grantable request to participate in the PPH program and petition to make special require:

(1) The U.S. application must validly claim priority under 35 U.S.C. 119(a) to one or more applications filed in the JPO, note where the JPO application with similar claims is not the same application from which the U.S. application claims priority that the applicant must identify the relationship between the JPO application with similar claims and the JPO priority application;

(2) Applicant must submit a copy of:
   a. The allowable/patentable claim(s) from the JPO application(s) or if a copy of the allowable/patentable claims is available via the Dossier Access System (DAS) applicant may request the USPTO to obtain a copy from DAS; however, if the USPTO is unable to obtain a copy from the DAS, the applicant will be required to submit a copy;
   b. An English translation of the allowable/ patentable claim(s), if applicable; and
   c. A statement that the English translation is accurate, if applicable;

(3) Applicant must:
   a. Ensure all the independent claims in the U.S. application must sufficiently correspond or be amended to sufficiently correspond to the allowable/patentable claim(s) in the JPO application(s); and
   b. Submit a claims correspondence table in English;

(4) Examination of the U.S. application has not begun;

(5) Applicant must submit:
   a. Documentation of prior office action:
      i. a copy of the office action(s) just prior to the "Decision to Grant a Patent" from each of the JPO application(s) containing the allowable/patentable claims(s) or
      ii. if the allowable/patentable claim(s) are from "Notification of Reasons for Refusal" then the Notification of Reasons for Refusal or
      iii. if the JPO application is a first action allowance then no office action from the JPO is necessary should be indicated on the request/petition form;
      Further, if a copy of the documents from (i) or (ii) is available via the Dossier Access System (DAS), applicant may request the USPO obtain a copy from the DAS; however, if the USPTO is unable to obtain a copy of the DAS, the applicant will be required to submit a copy; and
   b. An English language translation of the JPO Office action from (5)(a)(i)-(ii) above if applicable; and

(6) Applicant must submit:
   a. An IDS listing the documents cited by the JPO examiner in the JPO office action (unless already submitted in this application)
   b. Copies of documents except U.S. patents or U.S. patent application publications (unless already submitted in this application).

The request to participate in the PPH program and petition comply with the above requirements. Accordingly, the above-identified application has been accorded "special" status.

The application is being forwarded to the examiner for action on the merits commensurate with this decision.

Any inquiry regarding this decision should be directed to Walter D. Griffin, Supervisory Patent Examiner, at (571) 272-1447.

All other inquiries concerning the examination or status of the application is accessible in the PAIR system at http://www.uspto.gov/ebc/index.html.

/Walter D. Griffin/

Walter D. Griffin
Supervisory Patent Examiner
Technology Center 1700

UNITED STATES PATENT AND TRADEMARK OFFICE

Commissioner for Patents
United States Patent and Trademark Office
P.O. Box 1450
Alexandria, VA 22313-1450
www.uspto.gov

WINSTON & STRAWN LLP
PATENT DEPARTMENT
1700 K STREET, N.W.
WASHINGTON DC 20006

MAILED
JUN 24 2011
OFFICE OF PETITIONS

In re Application of
Alexandre Vaufredaz and Sebastien Molinari
Application No. 13/037,655
Filed: March 1, 2011
Attorney Docket No.: 4717-35200

DECISION ACCORDING STATUS
UNDER 37 CFR 1.47(a)

This is a decision in response to the petition under 37 CFR 1.47(a) filed May 27, 2011.

The petition is **GRANTED**.

Petitioner has shown that the non-signing inventor, Sebastien Molinari, has refused to join in the filing of the above-identified application.

The application and papers have been reviewed and found in compliance with 37 CFR 1.47(a). This application is hereby accorded Rule 1.47(a) status.

As provided in 37 CFR 1.47(c), this Office will forward notice of this application's filing to the non-signing inventor at the address given in the petition. Notice of the filing of this application will also be published in the Official Gazette.

This application is being referred to the Office of Patent Application Processing for pre-examination processing.

Telephone inquiries regarding this decision should be directed to the undersigned at (571) 272-3204.

/SDB/

Sherry D. Brinkley
Petitions Examiner
Office of Petitions

UNITED STATES PATENT AND TRADEMARK OFFICE

Commissioner for Patents
United States Patent and Trademark Office
P.O. Box 1450
Alexandria, VA 22313-1450
www.uspto.gov

MAILED
JUN 24 2011
OFFICE OF PETITIONS

MONSIEUR SEBASTIEN MOLINARI
21, CHEMIN DE FONTAINE
38360 SASSENAGE, FRANCE

In re Application of
Alexandre Vaufredaz and Sebastien Molinari
Application No. 13/037,655
Filed: March 1, 2011
For: PROCESS FOR FABRICATING A MULTILAYER STRUCTURE WITH TRIMMING USING THERMO-MECHANICAL EFFECTS

LETTER

Dear Mr. Molinari:

You are named as a joint inventor in the above-identified United States patent application filed under the provisions of 35 U.S.C. 116 (United States Code) and 37 CFR 1.47(a), Rules of Practice in Patent Cases. Should a patent be granted on the application you will be designated therein as a joint inventor.

As a named inventor you are entitled to inspect any paper in the file wrapper of the application, order copies of all or any part thereof (at a prepaid cost per 37 CFR 1.19) or make your position of record in the application. Alternatively, you may arrange to do any of the preceding through a registered patent attorney or agent presenting written authorization from you. If you care to join the application, counsel of record (see below) would presumably assist you. Joining in the application would entail the filing of an appropriate oath or declaration by you pursuant to 37 CFR 1.63.

Telephone inquiries regarding this communication should be directed to the undersigned at (571) 272-3204. Requests for information regarding your application should be directed to the File Information Unit at (703) 308-2733. Information regarding how to pay for and order a copy of the application, or a specific paper in the application, should be directed to the Certification Division at (571) 272-3150 or 1 (800) 972-6382 (outside the Washington, DC area).

/SDB/

Sherry D. Brinkley
Petitions Examiner
Office of Petitions

cc: WINSTON & STRAWN LLP
PATENT DEPARTMENT
1700 K STREET, N.W.
WASHINGTON DC 20006

UNITED STATES PATENT AND TRADEMARK OFFICE

UNITED STATES DEPARTMENT OF COMMERCE
United States Patent and Trademark Office
Address: COMMISSIONER FOR PATENTS
P.O. Box 1450
Alexandria, Virginia 22313-1450
www.uspto.gov

APPLICATION NO.	FILING DATE	FIRST NAMED INVENTOR	ATTORNEY DOCKET NO.	CONFIRMATION NO.
13/037,661	03/01/2011	Yutaka Ito	4605-103887	7318

28289 7590 05/26/2011
THE WEBB LAW FIRM, P.C.
ONE GATEWAY CENTER
420 FT. DUQUESNE BLVD, SUITE 1200
PITTSBURGH, PA 15222

EXAMINER
BARRY, CHESTER T

ART UNIT	PAPER NUMBER
1778	

NOTIFICATION DATE	DELIVERY MODE
05/26/2011	ELECTRONIC

Please find below and/or attached an Office communication concerning this application or proceeding.

The time period for reply, if any, is set in the attached communication.

Notice of the Office communication was sent electronically on above-indicated "Notification Date" to the following e-mail address(es):

patents@webblaw.com

UNITED STATES PATENT AND TRADEMARK OFFICE

Commissioner for Patents
United States Patent and Trademark Office
P.O. Box 1450
Alexandria, VA 22313-1450
www.uspto.gov

May 25, 2011 WG

In re application of Yutaka Ito et al. Serial No. 13/037,661 Filed: March 1, 2011 For: METHOD AND APPARATUS FOR GENERATING FRESH WATER, AND METHOD AND APPARATUS FOR DESALINATING SEA WATER	:	DECISION ON REQUEST TO PARTICIPATE IN PATENT PROSECUTION HIGHWAY PROGRAM AND PETITION TO MAKE UNDER 37 CFR 1.102(a)

This is a decision on the request to participate in the Patent Prosecution Highway (PPH) program and the petition under 37 CFR 1.102(a) to make the above-identified application special filed March 14, 2011.

The request and petition are **GRANTED**.

A grantable request to participate in the PPH program and petition to make special require:

(1) The U.S. application must validly claim priority under 35 U.S.C. 119(a) to one or more applications filed in the JPO, note where the JPO application with similar claims is not the same application from which the U.S. application claims priority that the applicant must identify the relationship between the JPO application with similar claims and the JPO priority application;

(2) Applicant must submit a copy of:
   a. The allowable/patentable claim(s) from the JPO application(s) or if a copy of the allowable/patentable claims is available via the Dossier Access System (DAS) applicant may request the USPTO to obtain a copy from DAS; however, if the USPTO is unable to obtain a copy from the DAS, the applicant will be required to submit a copy;
   b. An English translation of the allowable/ patentable claim(s), if applicable; and
   c. A statement that the English translation is accurate, if applicable;

(3) Applicant must:
   a. Ensure all the independent claims in the U.S. application must sufficiently correspond or be amended to sufficiently correspond to the allowable/patentable claim(s) in the JPO application(s); and
   b. Submit a claims correspondence table in English;

(4) Examination of the U.S. application has not begun;

(5) Applicant must submit:
   a. Documentation of prior office action:
      i. a copy of the office action(s) just prior to the "Decision to Grant a Patent" from each of the JPO application(s) containing the allowable/patentable claims(s) or
      ii. if the allowable/patentable claim(s) are from "Notification of Reasons for Refusal" then the Notification of Reasons for Refusal or
      iii. if the JPO application is a first action allowance then no office action from the JPO is necessary should be indicated on the request/petition form;
      Further, if a copy of the documents from (i) or (ii) is available via the Dossier Access System (DAS), applicant may request the USPO obtain a copy from the DAS; however, if the USPTO is unable to obtain a copy of the DAS, the applicant will be required to submit a copy; and
   b. An English language translation of the JPO Office action from (5)(a)(i)-(ii) above if applicable; and

(6) Applicant must submit:
   a. An IDS listing the documents cited by the JPO examiner in the JPO office action (unless already submitted in this application)
   b. Copies of documents except U.S. patents or U.S. patent application publications (unless already submitted in this application).

The request to participate in the PPH program and petition comply with the above requirements. Accordingly, the above-identified application has been accorded "special" status.

The application is being forwarded to the examiner for action on the merits commensurate with this decision.

Any inquiry regarding this decision should be directed to Walter D. Griffin, Supervisory Patent Examiner, at (571) 272-1447.

All other inquiries concerning the examination or status of the application is accessible in the PAIR system at http://www.uspto.gov/ebc/index.html.

/Walter D. Griffin/

Walter D. Griffin
Supervisory Patent Examiner
Technology Center 1700

Doc code : PET.OP.AGE
Description : Petition to make special based on Age/Health

PTO/SB/130 (07-09)
Approved for use through 07/31/2012. OMB 0651- 0031
U.S. Patent and Trademark Office; U.S. DEPARTMENT OF COMMERCE
Under the Paperwork Reduction Act of 1995, no persons are required to respond to a collection of information unless it contains a valid OMB control number

PETITION TO MAKE SPECIAL BASED ON AGE FOR ADVANCEMENT OF EXAMINATION UNDER 37 CFR 1.102(c)(1)

Application Information

Application Number	13037807	Confirmation Number	7598	Filing Date	2011-03-01
Attorney Docket Number (optional)	430.042PA	Art Unit		Examiner	
First Named Inventor	Kadah, Hassan B.				
Title of Invention	AC Line Voltage Conditioner and Controller				

Attention: Office of Petitions
An application may be made special for advancement of examination upon filing of a petition showing that the applicant is 65 years of age, or more. No fee is required with such a petition. See 37 CFR 1.102(c)(1) and MPEP 708.02 (IV).

APPLICANT HEREBY PETITIONS TO MAKE SPECIAL FOR ADVANCEMENT OF EXAMINATION IN THIS APPLICATION UNDER 37 CFR 1.102(c)(1) and MPEP 708.02 (IV) ON THE BASIS OF THE APPLICANT'S AGE.

A grantable petition requires one of the following items:
(1) Statement by one named inventor in the application that he/she is 65 years of age, or more; or
(2) Certification by a registered attorney/agent having evidence such as a birth certificate, passport, driver's license, etc. showing one named inventor in the application is 65 years of age, or more.

Name of Inventor who is 65 years of age, or older

Given Name	Middle Name	Family Name	Suffix
Hassan	B.	Kadah	

A signature of the applicant or representative is required in accordance with 37 CFR 1.33 and 10.18.
Please see 37 CFR 1.4(d) for the format of the signature.

Select (1) or (2) :

○ (1) I am an inventor in this application and I am 65 years of age, or more.

◉ (2) I am an attorney or agent registered to practice before the Patent and Trademark Office, and I certify that I am in possession of evidence, and will retain such in the application file record, showing that the inventor listed above is 65 years of age, or more.

Signature	/BMolldrem/	Date (YYYY-MM-DD)	2011-03-02
Name	Bernhard P Molldrem Jr	Registration Number	28973

PTO/SB/130 (07-09)
Approved for use through 07/31/2012. OMB 0651- 0031
U.S. Patent and Trademark Office; U.S. DEPARTMENT OF COMMERCE
Under the Paperwork Reduction Act of 1995, no persons are required to respond to a collection of information unless it contains a valid OMB control number

Privacy Act Statement

The Privacy Act of 1974 (P.L. 93-579) requires that you be given certain information in connection with your submission of the attached form related to a patent application or patent. Accordingly, pursuant to the requirements of the Act, please be advised that: (1) the general authority for the collection of this information is 35 U.S.C. 2(b)(2); (2) furnishing of the information solicited is voluntary; and (3) the principal purpose for which the information is used by the U.S. Patent and Trademark Office is to process and/or examine your submission related to a patent application or patent. If you do not furnish the requested information, the U.S. Patent and Trademark Office may not be able to process and/or examine your submission, which may result in termination of proceedings or abandonment of the application or expiration of the patent.

The information provided by you in this form will be subject to the following routine uses:

1. The information on this form will be treated confidentially to the extent allowed under the Freedom of Information Act (5 U.S.C. 552) and the Privacy Act (5 U.S.C. 552a). Records from this system of records may be disclosed to the Department of Justice to determine whether the Fr eedom of Information Act requires disclosure of these records.

2. A record from this system of records may be disclosed, as a routine use, in the course of presenting evidence to a court, magistrate, or administrative tribunal, including disclosures to opposing counsel in the course of settlement negotiations.

3. A record in this system of records may be disclosed, as a routine use, to a Member of Congress submitting a request involving an individual, to whom the record pertains, when the individual has requested assistance from the Member with respect to the subject matter of the record.

4. A record in this system of records may be disclosed, as a routine use, to a contractor of the Agency having need for the information in order to perform a contract. Recipients of information shall be required to comply with the requirements of the Privacy Act of 1974, as amended, pursuant to 5 U.S.C. 552a(m).

5. A record related to an International Application filed under the Patent Cooperation Treaty in this system of records may be disclosed, as a routine use, to the International Bureau of the World Intellectual Property Organization, pursuant to the Patent Cooperation Treaty.

6. A record in this system of records may be disclosed, as a routine use, to another federal agency for purposes of National Security review (35 U.S.C. 181) and for review pursuant to the Atomic Energy Act (42 U.S.C. 218(c)).

7. A record from this system of records may be disclosed, as a routine use, to the Administrator, General Services, or his/her designee, during an inspection of records conducted by GSA as part of that agency's responsibility to recommend improvements in records management practices and programs, under authority of 44 U.S.C. 2904 and 2906. Such disclosure shall be made in accordance with the GSA regulations governing inspection of records for this purpose, and any other relevant (i.e., GSA or Commerce) directive. Such disclosure shall not be used to make determinations about indivi duals.

8. A record from this system of records may be disclosed, as a routine use, to the public after either publication of the application pursuant to 35 U.S.C. 122(b) or issuance of a patent pursuant to 35 U.S.C. 151. Further, a record may be disclosed, subject to the limitations of 37 CFR 1.14, as a routine use, to the public if the record was filed in an application which became abandoned or in which the proceedings were terminated and which application is referenced by either a published application, an application open to public inspections or an issued patent.

9. A record from this system of records may be disclosed, as a routine use, to a Federal, State, or local law enforcement agency, if the USPTO becomes aware of a violation or potential violation of law or regulation.

UNITED STATES PATENT AND TRADEMARK OFFICE

Commissioner for Patents
United States Patent and Trademark Office
P.O. Box 1450
Alexandria, VA 22313-1450
www.uspto.gov

In re Application of
Hassan B. Kadah

Application No. 13037807

Filed:

Attorney Docket No. 430.042PA

:DECISION ON PETITION TO MAKE SPECIAL
:UNDER 37 CFR 1.102(c)(1)

This is a decision on the electronic petition under 37 CFR 1.102 (c)(1), filed 02-MAR-2011 to make the above-identified application special based on applicant's age as set forth in MPEP § 708.02, Section IV.

The petition is **GRANTED**.

A grantable petition to make an application special under 37 CFR 1.102(c)(1), MPEP § 708.02, Section IV: Applicant's Age must include a statement by applicant or a registered practitioner having evidence that applicant is at least 65 years of age. No fee is required.

Accordingly, the above-identified application has been accorded "special" status and will be taken up for action by the examiner upon the completion of all pre-examination processing.

Telephone inquiries concerning this electronic decision should be directed to the Electronic Business Center at 866-217-9197.

All other inquiries concerning either the examination or status of the application should be directed to the Technology Center.

UNITED STATES PATENT AND TRADEMARK OFFICE

Commissioner for Patents
United States Patent and Trademark Office
P.O. Box 1450
Alexandria, VA 22313-1450
www.uspto.gov

CARR & FERRELL LLP
120 CONSTITUTION DRIVE
MENLO PARK, CA 94025

MAILED

OCT 25 2011

OFFICE OF PETITIONS

In re Application of

Frederick Schmid, et al.
Application No. 13/037,841
Filed: March 1, 2011
Attorney Docket No. 0022475.00124US3

DECISION ON PETITION
TO MAKE SPECIAL UNDER
37 CFR 1.102(c)(1)

This is a decision on the petition under 37 CFR 1.102(c)(1), filed October 13, 2011, to make the above-identified application special based on applicant's age as set forth in M.P.E.P. § 708.02, Section IV.

The petition is **GRANTED**.

A grantable petition to make an application special under 37 CFR 1.102(c)(1) and MPEP § 708.02, Section IV: Applicant's Age must be accompanied by evidence showing that at least one of the applicants is 65 years of age, or more, such as a birth certificate or a statement by applicant. No fee is required

The instant petition includes a statement signed by applicant Frederick Schmid. Accordingly, the above-identified application has been accorded "special" status.

Telephone inquiries concerning this decision should be directed to undersigned at 571-272-1642.

All other inquiries concerning either the examination or status of the application should be directed to the Technology Center.

The application is being forwarded to the Technology Center Art Unit 1714 for action on the merits commensurate with this decision.

/AMW/
April M. Wise
Petitions Examiner
Office of Petitions

UNITED STATES PATENT AND TRADEMARK OFFICE

Commissioner for Patents
United States Patent and Trademark Office
P.O. Box 1450
Alexandria, VA 22313-1450
www.uspto.gov

MCHALE & SLAVIN, P.A.
2855 PGA BLVD
PALM BEACH GARDENS FL 33410

MAILED
MAY 03 2011
OFFICE OF PETITIONS

In re Application of	:	
Wyatt Drake Geist et al.	:	
Application No. 13/037,947	:	DECISION ON PETITION
Filed: March 1, 2011	:	TO MAKE SPECIAL UNDER
Attorney Docket No. 3362U.007	:	37 CFR 1.102(c)(1)
	:	

This is a decision on the petition under 37 CFR 1.102(c)(1), filed March 1, 2011, to make the above-identified application special based on applicant's age as set forth in M.P.E.P. § 708.02, Section IV.

The petition is **GRANTED.**

A grantable petition to make an application special under 37 CFR 1.102(c)(1) and MPEP § 708.02, Section IV: Applicant's Age must be accompanied by evidence showing that at least one of the applicants is 65 years of age, or more, such as a birth certificate or a statement by applicant. No fee is required

The instant petition includes a statement by an attorney on behalf of inventor Arden Allen Geist, attesting to his/her age. The above-identified application has been accorded "special" status.

Telephone inquiries concerning this decision should be directed to Kimberly Inabinet at 571-272-4618.

All other inquiries concerning either the examination or status of the application should be directed to the Technology Center.

Upon completion of the pre-examination processing by the Office of Patent Application Processing, this application will be referred to Technology Center 3763 for action on the merits commensurate with this decision.

/Kimberly Inabinet/

Kimberly Inabinet
Petitions Examiner
Office of Petitions

UNITED STATES PATENT AND TRADEMARK OFFICE

Commissioner for Patents
United States Patent and Trademark Office
P.O. Box 1450
Alexandria, VA 22313-1450
www.uspto.gov

In re Application of
Daniel Reich

Application No. 13038014

Filed:

Attorney Docket No. P00764

:DECISION ON PETITION TO MAKE SPECIAL
:UNDER 37 CFR 1.102(c)(1)

This is a decision on the electronic petition under 37 CFR 1.102 (c)(1), filed 01-MAR-2011 to make the above-identified application special based on applicant's age as set forth in MPEP § 708.02, Section IV.

The petition is **GRANTED**.

A grantable petition to make an application special under 37 CFR 1.102(c)(1), MPEP § 708.02, Section IV: Applicant's Age must include a statement by applicant or a registered practitioner having evidence that applicant is at least 65 years of age. No fee is required.

Accordingly, the above-identified application has been accorded "special" status and will be taken up for action by the examiner upon the completion of all pre-examination processing.

Telephone inquiries concerning this electronic decision should be directed to the Electronic Business Center at 866-217-9197.

All other inquiries concerning either the examination or status of the application should be directed to the Technology Center.

Doc Code: PET.GREEN
Document Description: Petition for Green Tech Pilot

PTO/SB/420 (11-10)
Approved for use through 01/31/2011. OMB 0651-0062
U.S. Patent and Trademark Office; U. S. DEPARTMENT OF COMMERCE
Under the Paperwork Reduction Act of 1995, no persons are required to respond to a collection of information unless it displays a valid OMB control number.

PETITION TO MAKE SPECIAL UNDER THE GREEN TECHNOLOGY PILOT PROGRAM

Attorney Docket Number: P00764	Application Number (if known): 13/038,014	Filing date: 2011-03-01
First Named Inventor: Daniel Reich		
Title: Modular Evaporator and Thermal Energy Storage System For Chillers		

APPLICANT HEREBY REQUESTS TO PARTICIPATE IN THE GREEN TECHNOLOGY PILOT PROGRAM FOR THE ABOVE-IDENTIFIED APPLICATION. See Instruction Sheet on page 2.

This petition must be timely filed electronically using the USPTO electronic filing system, EFS-Web.

1. By filing this petition:

   Applicant is requesting early publication: Applicant hereby requests early publication under 37 CFR 1.219 and the publication fee set forth in 37 CFR 1.18(d) accompanies this request.

2. By filing this petition: applicant is agreeing to make an election without traverse in a telephonic interview and elect an invention that meets the eligibility requirements for the Green Technology Pilot Program, if the Office determines that the claims are not obviously directed to a single invention. See Instruction Sheet.

3. This request is accompanied by statements of special status for the eligibility requirement.

4. The application contains no more than three (3) independent claims and twenty (20) total claims.

5. The application does not contain any multiple dependent claims.

6. Other attachments: _____

Signature /George D. Morgan/	Date 03-01-2011
Name (Print/Typed) George D. Morgan	Registration Number 46,505

Note: *Signatures of all the inventors or assignees of record of the entire interest or their representative(s) are required in accordance with 37 CFR 1.33 and 11.18. Please see 37 CFR 1.4(d) for the form of the signature. If necessary, submit multiple forms for more than one signature see below*.*

☐ *Total of 1 forms are submitted.

The information is required to obtain or retain a benefit by the public which is to file (and by the USPTO to process) an application. Confidentiality is governed by 35 U.S.C. 122 and 37 CFR 1.11 and 1.14. This collection is estimated to take 12 hours to complete, including gathering, preparing, and submitting the completed application form to the USPTO. Time will vary depending upon the individual case. Any comments on the amount of time you require to complete this form and/or suggestions for reducing this burden, should be sent to the Chief Information Officer, U.S. Patent and Trademark Office, U.S. Department of Commerce, P.O. Box 1450, Alexandria, VA 22313-1450. DO NOT SEND FEES OR COMPLETED FORMS TO THIS ADDRESS. **SEND TO: Commissioner for Patents, P.O. Box 1450, Alexandria, VA 22313-1450.**

If you need assistance in completing the form, call 1-800-PTO-9199 and select option 2.

IN THE UNITED STATES PATENT AND TRADEMARK OFFICE

In re Application of Daniel Reich et al.	)	Group Art Unit: TBD
Serial No.: 13/038,014	)	Examiner: TBD
Filed: March 1, 2011	)	Attorney Docket No: P00764
For: Modular Evaporator and Thermal Energy Storage System For Chillers	)	

Commissioner for Patents
P.O. Box 1450
Alexandria, VA 22313-1450

STATEMENT AS TO ELIGIBILITY
FOR GREEN TECHNOLOGY PILOT PROGRAM

The primary basis for the special status is that the application is directed to technology for energy conservation. More particularly, the application involves a modular evaporator capable of generating and holding ice for thermal storage purposes [Figs. 1-4; Abstract]. Thermal energy storage systems shift cooling energy use to non-peak times which take some of the burden off the energy grid. They chill storage media during periods of low cooling demands for later use during periods of higher cooling demand to meet air-conditioning loads. Air conditioners use more energy as they get hotter, and the more energy they draw, the less efficiently they use it. Off-peak cooling systems not only shift the demand for power to a different time of day, they create a more stable cooling environment that can deliver the same cooling capacity with less energy consumption. The present invention advances the art in a number of ways, including providing a modular approach so that such systems can be installed in buildings of various sizes and eliminates the need for external ice storage tanks, making the system less costly, and easier and less expensive to install and maintain.

UNITED STATES PATENT AND TRADEMARK OFFICE

UNITED STATES DEPARTMENT OF COMMERCE
United States Patent and Trademark Office
Address: COMMISSIONER FOR PATENTS
P.O. Box 1450
Alexandria, Virginia 22313-1450
www.uspto.gov

APPLICATION NO.	FILING DATE	FIRST NAMED INVENTOR	ATTORNEY DOCKET NO.	CONFIRMATION NO.
13/038,014	03/01/2011	Daniel Reich	P00764	8012

87598 7590 03/30/2011
Morgan Law Offices, PLC
4635 S. Lakeshore Dr. Suite 131
Tempe, AZ 85282

EXAMINER

ART UNIT	PAPER NUMBER
3744	

MAIL DATE	DELIVERY MODE
03/30/2011	PAPER

Please find below and/or attached an Office communication concerning this application or proceeding.

The time period for reply, if any, is set in the attached communication.

UNITED STATES PATENT AND TRADEMARK OFFICE

Commissioner for Patents
United States Patent and Trademark Office
P.O. Box 1450
Alexandria, VA 22313-1450
www.uspto.gov

Morgan Law Offices, PLC
4635 S. Lakeshore Dr. Suite 131
Tempe AZ 85282

In re Application of	:	
REICH, DANIEL et al	:	DECISION ON PETITION
Application No. 13/038,014	:	TO MAKE SPECIAL UNDER
Filed: March 1, 2011	:	THE GREEN TECHNOLOGY
Attorney Docket No. P00764	:	PILOT PROGRAM

This is a decision on the petition under 37 CFR 1.102, filed March 1, 2011 to make the above-identified application special under the pilot program for applications pertaining to Green Technologies as set forth in 74 Federal Register Notice 64666 (December 8, 2009) and amended by 75 Federal Register Notice 28554 (May 21, 2010) and 75 Federal Register Notice 69049 (November 10, 2010).

The petition is **dismissed as moot.** The petition make special based on health or age was granted on March 1, 2011. No additional petition make special is necessary.

If reconsideration of this decision is desired, a petition for reconsideration must be filed within ONE (1) MONTH OR THIRTY (30) DAYS from the mail date of this decision, whichever is longer. No extension of this time limit can be granted under 37 CFR 1.136(a) or (b). The petition for reconsideration should include an exhaustive attempt to provide the lacking item(s) noted below, since, after a decision on the petition for reconsideration, no further reconsideration or review of the matter will be undertaken by the Director.

A grantable petition to make an application special under 37 CFR 1.102 and the pilot program as set forth in 74 FR 64666 must be directed to a nonprovisional application filed under 35 USC 111(a) or be a national stage entry under 35 USC 371, exclusive of any reissue applications.

In order to qualify for special status, the following requirements must be met. 1) The application must have no more than 3 independent claims and no more than 20 total claims. 2) The application must not contain any multiple dependent claims. 3) The petition must state the basis for seeking special status, i.e., the claimed invention either: A) materially enhances the quality of the environment or B) materially contributes to: i) the discovery or development of renewable energy resources, ii) the more efficient utilization and conservation of energy resources, or iii) greenhouse gas emission reduction. 4) If the disclosure is not clear on its face that the claimed invention materially contributes under category (A) or (B), the petition must be accompanied by a statement by the applicant, assignee, or an attorney/agent registered to practice before the

Office explaining how the materiality standard is met. 5) A statement that applicant will agree to make an election without traverse in a telephonic interview if a restriction requirement is made by the examiner. 6) The petition to make special must be filed electronically. 7) The petition must be filed at least one day prior to the date that a first Office Action appears in the Patent Application Information Retrieval (PAIR) system. 8) The petition must be accompanied by a request for early publication in compliance with 37 CFR 1.219 and include the publication fee as set forth in 37 CFR 1.18(d).

The requirement for a fee for consideration of the petition to make special for applications pertaining to Green Technologies has been waived.

Based on the petition make special based on age and health filed on March 1, 2011, the above-identified application has been automatically processed and granted on March 1, 2011. The application status has been accorded "special" status.

Telephone inquires concerning this decision should be directed to Henry C. Yuen at 571-272-4856.

This application is currently undergoing pre-examination processing. Upon completion, the application will be forwarded to the Technology Center Art Unit 3744 for action on the merits commensurate with this decision.

/Henry C. Yuen/

Henry C. Yuen
Quality Assurance Specialist
Technology Center TC 3700

UNITED STATES PATENT AND TRADEMARK OFFICE

Commissioner for Patents
United States Patent and Trademark Office
P.O. Box 1450
Alexandria, VA 22313-1450
www.uspto.gov

PERKINS COIE LLP
P.O. BOX 1208
SEATTLE WA 98111-1208

MAILED
MAY 24 2011
OFFICE OF PETITIONS

In re Application:	:	
Robert A. Sprague	:	
Application No. 13/038,255	:	ON PETITION
Filed: March 1, 2011	:	
Attorney Docket No. 76614-8247.US01	:	

This is a notice regarding your request for acceptance of a fee deficiency submission under 37 CFR 1.28 filed March 24, 2011.

On September 1, 1998, the Court of Appeals for the Federal Circuit held that 37 CFR 1.28(c) is the sole provision governing the time for correction of the erroneous payment of the issue fee as a small entity. **See DH Technology v. Synergystex International, Inc. 154 F.3d 1333, 47 USPQ2d 1865 (Fed. Cir. Sept. 1, 1998).**

The Office no longer investigates or rejects original or reissue applications under 37 CFR 1.56. **1098 Off. Gaz. Pat. Office 502 (January 3, 1989)**. Therefore, nothing in this Notice is intended to imply that an investigation was done.

Your fee deficiency submission under 37 CFR 1.28 is hereby **ACCEPTED**.

It is noted that petitioner corrected deficiency payment on March 1, 2011.

This application is no longer entitled to small entity status. Accordingly, all future fees paid in this application must be paid at the large entity rate.

Telephone inquires concerning this decision should be directed to the undersigned at (571) 272-7751.

/Joan Olszewski/
Joan Olszewski
Petitions Examiner
Office of Petitions

Doc Code: PET.GREEN
Document Description: Petition for Green Tech Pilot

PTO/SB/420 (11-10)
Approved for use through 01/31/2011. OMB 0651-0062
U.S. Patent and Trademark Office; U.S. DEPARTMENT OF COMMERCE
Under the Paperwork Reduction Act of 1995, no persons are required to respond to a collection of information unless it displays a valid OMB control number.

PETITION TO MAKE SPECIAL UNDER THE GREEN TECHNOLOGY PILOT PROGRAM

Attorney Docket Number:	631192002300	Application Number (if known):	13/038,302	Filing date: March 1, 2011	
First Named Inventor:	David HORN				
Title:	LIQUID DISPLACER IN LED BULBS				

APPLICANT HEREBY REQUESTS TO PARTICIPATE IN THE GREEN TECHNOLOGY PILOT PROGRAM FOR THE ABOVE-IDENTIFIED APPLICATION. See Instruction Sheet on page 2.

This petition must be timely filed electronically using the USPTO electronic filing system, EFS-Web.

1. By filing this petition:

   Applicant is requesting early publication: Applicant hereby requests early publication under 37 CFR 1.219 and the publication fee set forth in 37 CFR 1.18(d) accompanies this request.

2. By filing this petition: applicant is agreeing to make an election without traverse in a telephonic interview and elect an invention that meets the eligibility requirements for the Green Technology Pilot Program, if the Office determines that the claims are not obviously directed to a single invention. See Instruction Sheet.

3. This request is accompanied by statements of special status for the eligibility requirement.

4. The application contains no more than three (3) independent claims and twenty (20) total claims.

5. The application does not contain any multiple dependent claims.

6. Other attachments: Statement of Special Status (2 pages)

Signature	/Peter J. Yim/	Date	May 6, 2011
Name (Print/Typed)	Peter J. Yim	Registration Number	44,417

***Note**: Signatures of all the inventors or assignees of record of the entire interest or their representative(s) are required in accordance with 37 CFR 1.33 and 11.18. Please see 37 CFR 1.4(d) for the form of the signature. If necessary, submit multiple forms if more than one signature, see below*.*

[X] *Total of 1 forms are submitted.

UNITED STATES PATENT AND TRADEMARK OFFICE

UNITED STATES DEPARTMENT OF COMMERCE
United States Patent and Trademark Office
Address: COMMISSIONER FOR PATENTS
P.O. Box 1450
Alexandria, Virginia 22313-1450
www.uspto.gov

APPLICATION NO.	FILING DATE	FIRST NAMED INVENTOR	ATTORNEY DOCKET NO.	CONFIRMATION NO.
13/038,302	03/01/2011	David HORN	631192002300	8555

20872 7590 07/28/2011
MORRISON & FOERSTER LLP
425 MARKET STREET
SAN FRANCISCO, CA 94105-2482

EXAMINER

ART UNIT	PAPER NUMBER
2875	

NOTIFICATION DATE	DELIVERY MODE
07/28/2011	ELECTRONIC

Please find below and/or attached an Office communication concerning this application or proceeding.

The time period for reply, if any, is set in the attached communication.

Notice of the Office communication was sent electronically on above-indicated "Notification Date" to the following e-mail address(es):

drcaldwell@mofo.com
EOfficeSF@mofo.com
PatentDocket@mofo.com

UNITED STATES PATENT AND TRADEMARK OFFICE

Commissioner for Patents
United States Patent and Trademark Office
P.O. Box 1450
Alexandria, VA 22313-1450
www.uspto.gov

MORRISON & FOERSTER LLP
425 MARKET STREET
SAN FRANCISCO CA 94105-2482

In re Application of	:	
HORN et al.	:	DECISION ON PETITION
Application No. 13/038302	:	TO MAKE SPECIAL UNDER
Filed: March 1, 2011	:	THE GREEN TECHNOLOGY
Attorney Docket No. 631192002300	:	PILOT PROGRAM

This is a decision on the petition under 37 CFR 1.102, filed on June 6, 2011, to make the above-identified application special under the pilot program for applications pertaining to Green Technologies as set forth 74 Federal Register Notice 64666 (December 8, 2009) and amended by 75 Federal Register Notice 28554 (May 21, 2010) and 75 Federal Register Notice 69049 (November 10, 2010).

The petition is **GRANTED**.

A grantable petition to make an application special under 37 CFR 1.102 and the pilot program as set forth in 74 FR 64666 must be directed to a nonprovisional application filed under 35 USC 111(a) or be a national stage entry under 35 USC 371, exclusive of any reissue applications.

In order to qualify for special status, the following requirements must be met. 1) The application must have no more than 3 independent claims and no more than 20 total claims. 2) The application must not contain any multiple dependent claims. 3) The petition must state the basis for seeking special status, i.e., the claimed invention either: A) materially enhances the quality of the environment or B) materially contributes to: i) the discovery or development of renewable energy resources, ii) the more efficient utilization and conservation of energy resources, or iii) greenhouse gas emission reduction. 4) If the disclosure is not clear on its face that the claimed invention materially contributes under category (A) or (B), the petition must be accompanied by a statement by the applicant, assignee, or an attorney/agent registered to practice before the Office explaining how the materiality standard is met. 5) A statement that applicant will agree to make an election without traverse in a telephonic interview if a restriction requirement is made by the examiner. 6) The petition to make special must be filed electronically. 7) The petition must be filed at least one day prior to the date that a first Office Action appears in the Patent Application Information Retrieval (PAIR) system. 8) The petition must be accompanied by a request for early publication in compliance with 37 CFR 1.219 and include the publication fee as set forth in 37 CFR 1.18(d).

The requirement for a fee for consideration of the petition to make special for applications pertaining to Green Technologies has been waived.

The instant petition complies with items 1 – 8 above. Accordingly, the above-identified application has been accorded "special" status.

Telephone inquires concerning this decision should be directed to Colleen Dunn at 571-272-1170.

The application is being forwarded to the appropriate Technology Center Art Unit for action on the merits commensurate with this decision.

For

Colleen Dunn
Quality Assurance Specialist
Technology Center 2800

Doc Code: PET.GREEN
Document Description: Petition for Green Tech Pilot

PTO/SB/420 (11-10)
Approved for use through 01/31/2011. OMB 0651-0062
U.S. Patent and Trademark Office; U.S. DEPARTMENT OF COMMERCE
Under the Paperwork Reduction Act of 1995, no persons are required to respond to a collection of information unless it displays a valid OMB control number.

PETITION TO MAKE SPECIAL UNDER THE GREEN TECHNOLOGY PILOT PROGRAM

Attorney Docket Number:	778358001US1	Application Number (if known): 13/038,358- Conf. #8675	Filing date: March 1, 2011
First Named Inventor:	Scott R. Frazier		
Title:	ROTARY COMPRESSOR-EXPANDER SYSTEMS AND ASSOCIATED METHODS OF USE AND MANUFACTURE, INCLUDING TWO-LOBED ROTOR SYSTEMS		

APPLICANT HEREBY REQUESTS TO PARTICIPATE IN THE GREEN TECHNOLOGY PILOT PROGRAM FOR THE ABOVE-IDENTIFIED APPLICATION. See Instruction Sheet on page 2.

This petition must be timely filed electronically using the USPTO electronic filing system, EFS-Web.

1. By filing this petition:

   Applicant is requesting early publication: Applicant hereby requests early publication under 37 CFR 1.219 and the publication fee set forth in 37 CFR 1.18(d) accompanies this request.

2. By filing this petition: applicant is agreeing to make an election without traverse in a telephonic interview and elect an invention that meets the eligibility requirements for the Green Technology Pilot Program, if the Office determines that the claims are not obviously directed to a single invention. See Instruction Sheet.

3. This request is accompanied by statements of special status for the eligibility requirement.

4. The application contains no more than three (3) independent claims and twenty (20) total claims.

5. The application does not contain any multiple dependent claims.

6. Other attachments: Statement in Support of Petition

Signature		Date	Oct. 17, 2011
Name (Print/Typed)	John M. Wechkin	Registration Number	42,216

***Note**: Signatures of all the inventors or assignees of record of the entire interest or their representative(s) are required in accordance with 37 CFR 1.33 and 11.18. Please see 37 CFR 1.4(d) for the form of the signature. If necessary, submit multiple forms if more than one signature, see below*.*

[X] *Total of 1 forms are submitted.

Docket No.: 778358001US1
(PATENT)

IN THE UNITED STATES PATENT AND TRADEMARK OFFICE

In re Patent Application of:
Frazier et al.

Application No.: 13/038,358

Confirmation No.: 8675

Filed: March 1, 2011

Art Unit: 3748

For: ROTARY COMPRESSOR-EXPANDER SYSTEMS AND ASSOCIATED METHODS OF USE AND MANUFACTURE, INCLUDING TWO-LOBED ROTOR SYSTEMS

Examiner: Not Yet Assigned

STATEMENT IN SUPPORT OF PETITION TO MAKE SPECIAL

Commissioner for Patents
P.O. Box 1450
Alexandria, VA 22313-1450

Sir:

This paper is filed in support of the Petition to Make Special under the Green Technology Pilot Program filed concurrently herewith.

Petitioner hereby states that the application has no more than 3 independent claims and no more than 20 total claims.

Petitioner hereby states that the application does not contain any multiple dependent claims.

Petitioner hereby states that the referenced application is directed to a single invention that materially enhances the quality of the environment, or that materially contributes to: (1) the discovery or development of renewable energy resources; (2) the

more efficient utilization and conservation of energy resources; (3) green house gas emission reduction.

More specifically, the application is directed to a rotary displacement system that is categorized in art unit 3748, class 418, Rotary Expansible Chamber Devices. The device includes a bi-directional, two-lobe rotor and/or a variable geometry seal for use in furtherance of the conservation of energy resources and/or greenhouse gas reduction.

With reference to the specification and claims, the claimed invention is directed to a rotary displacement system that includes a rotor having no more than two lobes. The rotor is positioned within a pressure-modifying chamber having a first port in fluid communication with a first passageway, and a second port in fluid communication with a second passageway. The rotor can operate bi-directionally as both a compressor (in a first mode) and an expander (in a second mode). The device can also include a variable geometry seal between the first and second ports that is sealably engaged with the periphery of the rotor.

As further disclosed and claimed, the rotary displacement device is configured to improve the efficiency of energy storage systems by: (1) reducing the friction and mass of system components; (2) reducing system complexity; (3) allowing more efficient fluid transfer via larger intake and outlet ports; and/or (4) reducing reverse flow within the rotary displacement device.

The following excerpts taken from the application as filed (with emphasis added), further support the Petitioner's statement that the invention materially enhances the quality of the environment, or that materially contributes to: (1) the discovery or development of renewable energy resources; (2) the more efficient utilization and conservation of energy resources; (3) green house gas emission reduction:

Some or all of the foregoing features have particular applicability and advantages in the context of renewable energy sources. In particular, many renewable energy sources (e.g., solar and wind) provide energy in a manner that varies significantly with time. Combined compressor/expander systems in combination with a suitable reservoir provide an efficient mechanism by which to store energy and release energy at a later time. By improving the efficiency with which such compressor/expander systems operate, aspects of the presently disclosed technology can improve the efficiency with which energy from renewable sources is obtained, stored and used.

(Specification ¶22, emphasis added)

In several embodiments of the disclosure, the system 210 includes a bidirectional compressor/expander, configured to operate as a compressor in a first mode and an expander in a second mode. Depending on the operational mode of the system 210 (e.g., whether it is being run as a compressor or an expander), the first port 226 operates as an inlet port or an outlet port and the second port 228 performs the opposite function, e.g., it operates as an outlet port or an inlet port. For example, in a first mode, in which the system 210 is running as a compressor, the rotor 232 rotates in a first direction, the first port 226 functions as an inlet port (feeding low-pressure working fluid, or flow, into the compression chamber 224), and the second port 228 functions as an outlet port (accepting compressed working fluid and feeding it to the first passageway 214). In the second mode, in which the system is running as an expander, the rotor 232 rotates in a second direction opposite the first direction, the first port 226 operates as an outlet port, the second port 228 operates as an inlet port, and the direction of flow through the system 210 is reversed. In other embodiments, the system 210 operates as a dedicated compressor or expander, and does not run bidirectionally. In particular embodiments, the system 210 can have more than two ports. For example, in some embodiments, the system 210 can have two inlet ports and two outlet ports. The ports 226, 228 can be rectangular with rounded corners or otherwise shaped. The ports 226, 228 are positioned in the chamber housing 218 in manners that differ in different embodiments of the disclosure, as will be described in further detail later. In any of these embodiments, individual ports (e.g., the first port 226 and the second port 228) are separated from each other by a separation portion 230 of the chamber housing 218.

(Specification ¶31, emphasis added)

The preceding overview introduced several systems and methods for efficiently and effectively compressing and expanding fluids in various settings. For example, in an underwater CAES system with high external pressures and

high fluid volume, embodiments of bidirectional compressor/expanders with three or fewer lobes and large ports can provide for a high flow of fluid with low fluid friction. The large ports are made possible by various designs and features, e.g., the tip wideners and the variable geometry seals introduced above and described in further detail below.

(Specification ¶43, emphasis added)

Several of the systems described above can reduce or minimize operation and/or material costs while improving efficiency. For example, in some embodiments the compressor/expander can be placed in proximity to a large body of water that provides a constant source of heat or cooling energy. Additionally or alternatively, the body of water can provide a repository for water warmed by the compression process. If the warmed water is contained, the warmed water can later be used during the expansion process, using the same heat exchange method used to collect the heat of compression. Furthermore, the reduced lobe designs generally require less mass and thus less cost for the volume of gas that they compress. Valveless, bidirectional operation of the compressor/expander can offer further efficiency and can reduce device complexity and material costs. The following sections describe several of these features and advantages in more detail and will introduce additional related features and advantages.

(Specification ¶44, emphasis added)

One feature of the foregoing arrangement is that the pressure ratio between the ports 226, 228 can be designed to be modest, e.g. on the order of 1.2 in particular embodiments. An advantage of the arrangement is that it reduces the temperature increase during compression, which allows the system to be manufactured with relatively low temperature materials. This in turn can reduce the overall cost of the systems. When it is necessary to compress the fluid by a greater pressure ratio (as is typically the case), the system can include multiple stages arranged in series, as described later with reference to Figure 6B. Another feature of the foregoing arrangement is that it includes a rotor with only two lobes. An advantage of this feature is that it can allow greater flexibility in positioning and/or sizing the first and second ports. This in turn can facilitate larger ports which can improve the efficiency of the system, as described, further later.

(Specification ¶53, emphasis added)

Both the tip wideners and the variable geometry seals can significantly reduce reverse flow conditions while still accommodating large port sizes. For example, the tip wideners can reduce or minimize reverse flow by effectively narrowing the effective circumferential spacing between ports along the inner wall of the chamber. Likewise, variable geometry seals dynamically separate high- and low-pressure sides of the chamber, reducing the chance that high- and low- pressure ports will be simultaneously open within a single zone. By reducing reverse flow conditions and accommodating large ports, the system can benefit from reduced tip bypass flow and allows port opening and closing timing to be optimized, thereby improving system efficiency. While these features were described above in the context of a three-lobed rotor, they can be applied alone or in combination to a two-lobed rotor.

(Specification ¶58, emphasis added)

The various embodiments of rotary displacement devices disclosed herein offer numerous benefits, some of which have been discussed above with reference to particular features. The two-and three-lobed embodiments utilize various mechanisms (e.g., the variable geometry seal and/or the tip wideners) to eliminate the need for a check valve between the pressure-modifying chamber and the passageways. The systems can reduce or eliminate reverse flow conditions and the time that neither port is open. These mechanisms can also reduce system cost and complexity, which in turn reduces initial system cost and subsequent maintenance costs. The foregoing arrangement can also allow the systems to more quickly and dynamically alternate between the compression and expansion modes. Furthermore, the relatively large port sizes in several of the devices reduce pressure losses through the intake and exhaust ports, again increasing the overall efficiency of the device.

(Specification ¶94, emphasis added)

The foregoing features can be particularly advantageous in the context of a compressor/expander system that is used to both store and release energy, as shown in Figure 1. In particular the foregoing features can reduce the cost of storing and releasing energy supplied by sources that may provide energy on an intermittent, non-continuous or other variable basis. For example, several renewable energy services (e.g., solar energy and wind energy) typically provide energy in a highly variable manner. Systems and methods that reduce the cost of using such energy sources efficiently and effectively can create significant benefits, including reducing the use of fossil fuels and therefore reducing global warming and dependence on foreign energy sources.

(Specification ¶96, emphasis added)

The petitioner respectfully asserts that the foregoing features of the rotary displacement system, namely, a two-lobe rotor design in a bi-directional compressor/expander, and a variable geometry seal in engagement with the rotor increase the efficiency with which energy is stored and released, for use in furtherance of the conservation of energy resources (e.g., by increasing energy efficiency) and/or greenhouse gas reduction (e.g., by facilitating the use of solar, wind and/or other intermittent energy sources).

Petitioner hereby agrees to make an election without traverse in a telephonic interview if a restriction requirement is made by the Examiner.

This petition is filed electronically.

This petition is filed at least one day prior to the date that a first Office Action appears in the Patent Application Information Retrieval (PAIR) system.

A request for early publication in compliance with 37 CFR 1.219 and the associated publication fee is submitted herewith.

In light of the above, it is requested that the Petition to Make Special under the Green Technology Pilot Program be granted.

Please charge any deficiency in fees or credit any overpayment to our Deposit Account No. 50-0665, under Order No. 778358001US1 from which the undersigned is authorized to draw.

Dated: October 17, 2011

Respectfully submitted,

By_____

John M. Wechkin
Registration No.: 42,216
PERKINS COIE LLP
P.O. Box 1247
Seattle, Washington 98111-1247
(206) 359-8000
(206) 359-7198 (Fax)
Attorney for Applicant

UNITED STATES PATENT AND TRADEMARK OFFICE

UNITED STATES DEPARTMENT OF COMMERCE
United States Patent and Trademark Office
Address: COMMISSIONER FOR PATENTS
P.O. Box 1450
Alexandria, Virginia 22313-1450
www.uspto.gov

APPLICATION NO.	FILING DATE	FIRST NAMED INVENTOR	ATTORNEY DOCKET NO.	CONFIRMATION NO.
13/038,358	03/01/2011	Scott R. Frazier	77835.8001US01	8675

25096 7590 11/25/2011
PERKINS COIE LLP
PATENT-SEA
P.O. BOX 1247
SEATTLE, WA 98111-1247

EXAMINER

ART UNIT	PAPER NUMBER
3748	

NOTIFICATION DATE	DELIVERY MODE
11/25/2011	ELECTRONIC

Please find below and/or attached an Office communication concerning this application or proceeding.

The time period for reply, if any, is set in the attached communication.

Notice of the Office communication was sent electronically on above-indicated "Notification Date" to the following e-mail address(es):

patentprocurement@perkinscoie.com

UNITED STATES PATENT AND TRADEMARK OFFICE

Commissioner for Patents
United States Patent and Trademark Office
P.O. Box 1450
Alexandria, VA 22313-1450
www.uspto.gov

PERKINS COIE LLP
PATENT-SEA
P.O. BOX 1247
SEATTLE WA 98111-1247

In re Application of		
FRAZIER, SCOTT R. et. al.	:	DECISION ON PETITION
Application No. 13/038,358	:	TO MAKE SPECIAL UNDER
Filed: March 1, 2011	:	THE GREEN TECHNOLOGY
Attorney Docket No. 77835.8001US01	:	PILOT PROGRAM

This is a decision on the petition under 37 CFR 1.102, filed October 17, 2011, to make the above-identified application special under the pilot program for applications pertaining to Green Technologies as set forth in 74 Federal Register Notice 64666 (December 8, 2009) and amended by 75 Federal Register Notice 28554 (May 21, 2010) and 75 Federal Register Notice 69049 (November 10, 2010).

The petition is **granted**.

A grantable petition to make an application special under 37 CFR 1.102 and the pilot program as set forth in 74 FR 64666 must be directed to a nonprovisional application filed under 35 USC 111(a) or be a national stage entry under 35 USC 371, exclusive of any reissue applications.

If reconsideration of this decision is desired, a petition for reconsideration must be filed within ONE (1) MONTH OR THIRTY (30) DAYS from the mail date of this decision, whichever is longer. No extension of this time limit can be granted under 37 CFR 1.136(a) or (b). The petition for reconsideration should include an exhaustive attempt to provide the lacking item(s) noted below, since, after a decision on the petition for reconsideration, no further reconsideration or review of the matter will be undertaken by the Director.

In order to qualify for special status, the following requirements must be met. 1) The application must have no more than 3 independent claims and no more than 20 total claims. 2) The application must not contain any multiple dependent claims. 3) The petition must state the basis for seeking special status, i.e., the claimed invention either: A) materially enhances the quality of the environment or B) materially contributes to: i) the discovery or development of renewable energy resources, ii) the more efficient utilization and conservation of energy resources, or iii) greenhouse gas emission reduction. 4) If the disclosure is not clear on its face that the claimed invention materially contributes under category (A) or (B), the petition must be accompanied by

a statement by the applicant, assignee, or an attorney/agent registered to practice before the Office explaining how the materiality standard is met. 5) A statement that applicant will agree to make an election without traverse in a telephonic interview if a restriction requirement is made by the examiner. 6) The petition to make special must be filed electronically. 7) The petition must be filed at least one day prior to the date that a first Office Action appears in the Patent Application Information Retrieval (PAIR) system. 8) The petition must be accompanied by a request for early publication in compliance with 37 CFR 1.219 and include the publication fee as set forth in 37 CFR 1.18(d).

The requirement for a fee for consideration of the petition to make special for applications pertaining to Green Technologies has been waived.

The instant petition complies with items 1 – 8 above. Accordingly, the above-identified application has been accorded "special" status.

Telephone inquires concerning this decision should be directed to Henry C. Yuen at 571-272-4856.

This application will be forwarded to the Technology Center Art Unit 3748 for action on the merits commensurate with this decision.

/Henry C. Yuen/

Henry C. Yuen
Quality Assurance Specialist
Technology Center TC 3700