UNITED STATES PATENT AND TRADEMARK OFFICE

UNITED STATES DEPARTMENT OF COMMERCE
United States Patent and Trademark Office
Address: COMMISSIONER FOR PATENTS
P.O. Box 1450
Alexandria, Virginia 22313-1450
www.uspto.gov

APPLICATION NO.	FILING DATE	FIRST NAMED INVENTOR	ATTORNEY DOCKET NO.	CONFIRMATION NO.
13/092,425	04/22/2011	Dong Hun KANG	2011_0575A	6533

513 7590 06/15/2011

WENDEROTH, LIND & PONACK, L.L.P.
1030 15th Street, N.W.,
Suite 400 East
Washington, DC 20005-1503

EXAMINER	
ART UNIT	PAPER NUMBER
2841	

NOTIFICATION DATE	DELIVERY MODE
06/15/2011	ELECTRONIC

Please find below and/or attached an Office communication concerning this application or proceeding.

The time period for reply, if any, is set in the attached communication.

Notice of the Office communication was sent electronically on above-indicated "Notification Date" to the following e-mail address(es):

ddalecki@wenderoth.com
eoa@wenderoth.com

UNITED STATES PATENT AND TRADEMARK OFFICE

Commissioner for Patents
United States Patent and Trademark Office
P.O. Box 1450
Alexandria, VA 22313-1450
www.uspto.gov

WENDEROTH, LIND & PONACK, L.L.P.
1030 15th Street, N.W.,
Suite 400 East
Washington DC 20005-1503

In re Application of	**: DECISION ON REQUEST TO**
Dong Hun KANG	**: PARTICIPATE IN THE PATENT**
Application No.: 13/092,425	**: PROSECUTION HIGHWAY**
Filed: 22 April 2011	**: PROGRAM AND PETITION**
Attorney Docket No.: 2011_0575A	**: TO MAKE SPECIAL UNDER**
For: TAPE MEASURE WITH SELF-REGULATING SPEED CONTROL MECHANISM	**: 37 CFR 1.102(a)**

This is a decision on the request to participate in the Patent Prosecution Highway (PPH) program and the petition under 37 CFR 1.102(a), filed 02 June 2011, to make the above-identified application special.

The request and petition are **GRANTED**.

Discussion

A grantable request to participate in the PPH program and petition to make special require:

1. The U.S. application is

   a. a Paris Convention application which either
      i. validly claims priority under 35 U.S.C. 119(a) and 37 CFR 1.55 to one or more applications filed in the KIPO, or
      ii. validly claims priority under 35 U.S.C. 119(a)/365(a) to a PCT application that contains no priority claims,

   or

   b. a national stage application under the PCT (an application which entered the national stage in the U.S. from a PCT international application after compliance with 35 U.S.C. 371), which PCT application
      i. validly claims priority under 35 U.S.C. 365(b) to an application filed in the KIPO, or
      ii. validly claims priority under 35 U.S.C. 365(b) to a PCT application that contains no priority claims, or
      iii. contains no priority claim,

   or

   c. a so-called bypass application filed under 35 U.S.C. 111(a) which validly claims benefit under 35 U.S.C. 120 to a PCT application, which PCT application

i. validly claims priority under 35 U.S.C. 365(b) to an application filed in the KIPO, or
ii. validly claims priority under 35 U.S.C. 365(b) to a PCT application that contains no priority claims, or
iii. contains no priority claim;

2. Applicant must submit a copy of:
   a. The allowable/patentable claim(s) from the KR application(s);
   b. An English translation of the allowable/patentable claim(s), and
   c. A statement that the English translation is accurate (if the claims were published in a language other than English);
3. Applicant must:
   a. Ensure that all the claims in the U.S. application must sufficiently correspond or be amended to sufficiently correspond to the allowable/patentable claim(s) in the KR application(s), and
   b. Submit a claims correspondence table in English;
4. Examination of the U.S. application has not begun;
5. Applicant must submit:
   a. A copy of all the office actions (which are relevant to patentability), excluding "Decision to Grant a Patent" from each of the KR application(s) containing the allowable/patentable claim(s);
   b. An English language translation of the KIPO office action; and
   c. A statement that the English translation is accurate (if the office actions are not in the English language);
6. Applicant must submit:
   a. An IDS listing the documents cited by the KIPO examiner in the KIPO office action (unless already filed in this application); and
   b. Copies of all the documents cited in the KIPO office action, except U.S. patents or U.S. patent application publications (unless already filed in this application);

The request to participate in the PPH program and petition comply with the above requirements. Accordingly, the above-identified application has been accorded "special" status.

Telephone inquiries concerning this decision should be directed to Lee W. Young at 571-272-4549.

All other inquiries concerning the examination or status of the application is accessible in the PAIR system at http://uspto.gov/ebc/index.html.

This application will be forwarded to the examiner for action on the merits commensurate with this decision once this application's formality reviews have been completed.

Lee W. Young
TQAS
Technology Center 2800 – Semiconductors
Electrical & Optical Systems & Components

UNITED STATES PATENT AND TRADEMARK OFFICE

UNITED STATES DEPARTMENT OF COMMERCE
United States Patent and Trademark Office
Address: COMMISSIONER FOR PATENTS
P.O. Box 1450
Alexandria, Virginia 22313-1450
www.uspto.gov

APPLICATION NO.	FILING DATE	FIRST NAMED INVENTOR	ATTORNEY DOCKET NO.	CONFIRMATION NO.
13/092,459	04/22/2011	Matthew W. Davis	MPC0263USC4	6599

23413 7590 04/28/2011

CANTOR COLBURN LLP
20 Church Street
22nd Floor
Hartford, CT 06103

EXAMINER	
ART UNIT	PAPER NUMBER
1628	

NOTIFICATION DATE	DELIVERY MODE
04/28/2011	ELECTRONIC

Please find below and/or attached an Office communication concerning this application or proceeding.

The time period for reply, if any, is set in the attached communication.

Notice of the Office communication was sent electronically on above-indicated "Notification Date" to the following e-mail address(es):

usptopatentmail@cantorcolburn.com

UNITED STATES PATENT AND TRADEMARK OFFICE

Commissioner for Patents
United States Patent and Trademark Office
P.O. Box 1450
Alexandria, VA 22313-1450
www.uspto.gov

APR 2 8 2011

CANTOR COLBURN LLP
20 Church Street
22nd Floor
Hartford CT 06103

In re Application of:
Matthew W. Davis

Serial No.: 13/092,459

Filed: April 22, 2011

Docket No.: **MPC0263USC4**

Title: **METHODS FOR CONCOMITANT ADMINISTRATION OF COLCHICINE AND A SECOND ACTIVE AGENT**

DECISION ON REQUEST FOR CONSIDERATION TO MAKE SPECIAL FOR NEW APPLICATION UNDER 37 C.F.R. § 1.102 & M.P.E.P. § 708.02

This is a decision on the petition filed on April 22, 2011 to make the above-identified application special for accelerated examination procedure under 37 C.F.R. § 1.102(d).

The petition to make the application special is GRANTED.

The application is eligible for accelerated examination and the petition complies with the conditions for granting the application special status pursuant to the "Change to Practice for Petitions in Patent Applications to Make Special and for Accelerated Examination" published June 26, 2006, in the Federal Register. (71 Fed. Reg. 36323).

The prosecution of the instant application will be conducted expeditiously according to the following guidelines.

1. The application will be docketed to an examiner and taken up for action within two weeks of the date of this decision.

2. Restriction Practice:
   If the examiner determines that the claims are not directed to a single invention, a telephone request to elect one single invention will be made pursuant to MPEP 812.01. As a prerequisite to the grant of this petition, the applicant has agreed to make an oral election, by telephone, without traverse. If the applicant refuses to make an election without traverse, or the examiner cannot reach the applicant after a reasonable effort, the

examiner will treat the first claimed invention (invention defined by claim 1) as having being constructively elected without traverse for examination.

3. Office action:
   If it is determined that, after appropriate consultation, there is a potential rejection or any other issue to be addressed, the examiner will telephone the applicant and arrange an interview to discuss and resolve the issue. An Office action, other than a Notice of Allowance and Fee(s) Due (Notice of Allowance), will not be issued unless either: 1) an interview was conducted but did not result in agreed to action that places the application in condition for allowance, or, 2) a determination is made that an interview would be unlikely to result in the application being placed in condition for allowance, and 3) an internal conference has been held to review any rejection of any claim.

4. Time for Reply:
   An Office action other than a Notice of Allowance or a final Office action will set a shortened statutory period of one month or thirty days, whichever is longer, for reply with no extension of time available under 37 CFR 1.136(a). Failure to timely file a reply within this non-extendible period for reply will result in the abandonment of the application.

5. Reply by Applicant:
   A timely reply to an Office action other than the Notice of Allowance must be submitted electronically via EFS or EFS-web and limited to addressing the rejections, objections and requirement made. Any amendment that attempts to: 1) add claims which would result in more than three pending independent claims or more than twenty pending total claims; 2) present claims not encompassed by the pre-examination search or an updated accelerated examination support document; or 3) present claims that are directed a non-elected invention or an invention other than that previously claimed and examined in the application, will be treated as not fully responsive and will not be entered.

   For any amendment to the claims (including any new claim) that is not encompassed by the accelerated examination support document, applicant must provide an updated accelerated examination support document that encompasses the amended or new claims at the time of filing of the amendment.

   To proceed expeditiously with the examination, it is recommended that a reply with amendments made to any claim or with any new claim being added be accompanied by an updated accelerated examination support document or a statement explaining how the amended or new claim is supported by the original accelerated examination support document.

6. Information Disclosure Statement (IDS):
7. Any IDS filed during prosecution must be submitted electronically via EFS or EFS-web, accompanied by an updated accelerated examination support document, and be in compliance with 37 CFR 1.97 and 1.98.

8. Post-Allowance Processing:
   To expedite processing of the allowed application into a patent, the applicant must: 1) pay the required fees within one month of the date of the Notice of Allowance, and 2) not file any post allowance papers not required by the Office. In no event may the issue fee be paid and accepted later than three months from the date of the Notice of Allowance.

9. After-Final and Appeal Procedures:
   To expedite prosecution, after receiving the final Office action, applicant must: 1) promptly file a notice of appeal, an appeal brief and appeal fees; and 2) not request a pre-appeal brief conference.

   Any amendment, affidavit or other evidence filed after final Office action must comply with applicable rules and the requirements outlined in numbered paragraphs 5 and 6 above.

   On appeal, the application will proceed according to normal appeal procedures. After appeal, the application will again be treated special.

10. Proceedings Outside the Normal Examination Process:
    If the application becomes involved in a proceeding that is outside the normal examination process (e.g., a secrecy order, national security review, interference proceeding, petitions under 37 CFR 1.181, 182 or 183), the application will be treated special before and after such proceeding.

11. Final Disposition:
    The twelve month goal of this accelerated examination procedure ends with a final disposition. The mailing of a final Office action, a Notice of Allowance, the filing of a Notice of Appeal, or the filing of a Request for Continued Examination (RCE) is the final disposition.

If, during prosecution, a paper is not filed electronically using EFS-web, a reply is filed but is not fully responsive, the application is involved in an appeal, or a proceeding outside normal examination process, the application will still be examined expeditiously, however, the final disposition may occur more than twelve months from the filing of the application.

Any inquiry regarding this decision should be directed to Marianne C. Seidel, Quality Assurance Specialist, at (571) 272-0584.

/MC Seidel/
Marianne C. Seidel, Quality Assurance Specialist
Technology Center 1600

Doc Code: PET.GREEN
Document Description: Petition for Green Tech Pilot

PTO/SB/420 (03-11)

PETITION TO MAKE SPECIAL UNDER THE GREEN TECHNOLOGY PILOT PROGRAM

Attorney Docket Number: 976-167 US	Application Number (if known):	Filing date: April 22, 2011

First Named Inventor: Johannes G. Wijmans

Title: COMBUSTION SYSTEMS AND POWER PLANTS . . .TO REMOVE CO2 FROM COMBUSTION GASES

APPLICANT HEREBY REQUESTS TO PARTICIPATE IN THE GREEN TECHNOLOGY PILOT PROGRAM FOR THE ABOVE-IDENTIFIED APPLICATION. **See Instruction Sheet on page 2.**

This petition must be timely filed electronically using the USPTO electronic filing system, EFS-Web.

1. By filing this petition:

   Applicant is requesting early publication: Applicant hereby requests early publication under 37 CFR 1.219 and the publication fee set forth in 37 CFR 1.18(d) accompanies this request.

2. By filing this petition: applicant is agreeing to make an election without traverse in a telephonic interview and elect an invention that meets the eligibility requirements for the Green Technology Pilot Program, if the Office determines that the claims are not obviously directed to a single invention. See Instruction Sheet.

3. This request is accompanied by statements of special status for the eligibility requirement.

4. The application contains no more than three (3) independent claims and twenty (20) total claims.

5. The application does not contain any multiple dependent claims.

6. Other attachments: Request for First Action Interview

Signature Kathi Bean	Date April 22, 2011
Name (Print/Typed) Kathi Bean	Registration Number 36,644

Note: *Signatures of all the inventors or assignees of record of the entire interest or their representative(s) are required in accordance with 37 CFR 1.33 and 11.18. Please see 37 CFR 1.4(d) for the form of the signature. If necessary, submit multiple forms for more than one signature, see below*.*

■ *Total of 1 forms are submitted.

If you need assistance in completing the form, call 1-800-PTO-9199 and select option 2.

IN THE UNITED STATES PATENT AND TRADEMARK OFFICE

In re the application of	: Johannes G. Wijmans et al.	Examiner:	Not yet assigned
Serial number	: Not yet assigned	Group Art Unit:	1776
Filed	: April 22, 2011	Docket No.:	976-167 US
For	: COMBUSTION SYSTEMS AND POWER PLANTS INCORPORATING PARALLEL CARBON DIOXIDE CAPTURE AND SWEEP-BASED MEMBRANE SEPARATION UNITS TO REMOVE CARBON DIOXIDE FROM COMBUSTION GASES		

April 22, 2011

STATEMENT OF ELIGIBILITY FOR GREEN TECHNOLOGY PILOT PROGRAM

Hon. Commissioner for Patents
P.O. Box 1450
Alexandria, Virginia 22313-1450

Sir:

Applicants maintain that the subject application is eligible for accelerated examination under the Green Technology Pilot Program because the invention disclosed therein materially contributes to the reduction of greenhouse gas emissions (namely, CO_2).

Applicants agree to make an election without traverse in a telephonic interview with the Examiner and to elect an invention that meets the eligibility requirements of the Green Technology Pilot Program should the Office determine that the claims are not directed to a single invention. A Request for a First Action Interview is submitted herewith.

The application as filed contains two (2) independent claim, seventeen (17) total claims, and no (0) multiple dependent claims. No amendments to the claims or specification are being made at this time.

The early publication fee under 37 CFR 1.18(d) of $ 300 is provided for on the attached Fee Transmittal form.

Applicants' agent can be reached at the telephone and fax numbers and e-mail address provided below.

Respectfully Submitted,

Kathi Bean
Registration No. 36,644
Membrane Technology and Research, Inc.
1360 Willow Road, Suite 103
Menlo Park, CA 94025
(650) 543-3370
Fax Number: (650) 328-6580
kathi.bean@mtrinc.com

I hereby certify that this correspondence is being electronically submitted to the U.S. Patent and Trademark Office on
April 22, 2011.

Jennifer Valcov

IN THE UNITED STATES PATENT AND TRADEMARK OFFICE

In re the application of	: Johannes G. Wijmans et al.	Examiner:	Not yet assigned
Serial number	: Not yet assigned	Group Art Unit:	1776
Filed	: April 22, 2011	Docket No.:	976-167 US
For	: COMBUSTION SYSTEMS AND POWER PLANTS INCORPORATING PARALLEL CARBON DIOXIDE CAPTURE AND SWEEP-BASED MEMBRANE SEPARATION UNITS TO REMOVE CARBON DIOXIDE FROM COMBUSTION GASES		

April 22, 2011

STATEMENT OF ELIGIBILITY FOR GREEN TECHNOLOGY PILOT PROGRAM

Hon. Commissioner for Patents
P.O. Box 1450
Alexandria, Virginia 22313-1450

Sir:

Applicants maintain that the subject application is eligible for accelerated examination under the Green Technology Pilot Program because the invention disclosed therein materially contributes to the reduction of greenhouse gas emissions (namely, CO_2).

Applicants agree to make an election without traverse in a telephonic interview with the Examiner and to elect an invention that meets the eligibility requirements of the Green Technology Pilot Program should the Office determine that the claims are not directed to a single invention. A Request for a First Action Interview is submitted herewith.

The application as filed contains two (2) independent claim, seventeen (17) total claims, and no (0) multiple dependent claims. No amendments to the claims or specification are being made at this time.

The early publication fee under 37 CFR 1.18(d) of $ 300 is provided for on the attached Fee Transmittal form.

Applicants' agent can be reached at the telephone and fax numbers and e-mail address provided below.

Respectfully Submitted,

Kathi Bean
Registration No. 36,644
Membrane Technology and Research, Inc.
1360 Willow Road, Suite 103
Menlo Park, CA 94025
(650) 543-3370
Fax Number: (650) 328-6580
kathi.bean@mtrinc.com

I hereby certify that this correspondence is being electronically submitted to the U.S. Patent and Trademark Office on
April 22, 2011.

Jennifer Valcov

UNITED STATES PATENT AND TRADEMARK OFFICE

UNITED STATES DEPARTMENT OF COMMERCE
United States Patent and Trademark Office
Address: COMMISSIONER FOR PATENTS
P.O. Box 1450
Alexandria, Virginia 22313-1450
www.uspto.gov

APPLICATION NO.	FILING DATE	FIRST NAMED INVENTOR	ATTORNEY DOCKET NO.	CONFIRMATION NO.
13/092,489	04/22/2011	Johannes G. Wijmans	976-167	6669

26909 7590 05/26/2011

MEMBRANE TECHNOLOGY AND RESEARCH INC.
1360 WILLOW ROAD SUITE 103
MENLO PARK, CA 94025-1516

EXAMINER	
ART UNIT	PAPER NUMBER
1776	

MAIL DATE	DELIVERY MODE
05/26/2011	PAPER

Please find below and/or attached an Office communication concerning this application or proceeding.

The time period for reply, if any, is set in the attached communication.

UNITED STATES PATENT AND TRADEMARK OFFICE

Commissioner for Patents
United States Patent and Trademark Office
P.O. Box 1450
Alexandria, VA 22313-1450
www.uspto.gov

MEMBRANE TECHNOLOGY AND RESEARCH INC.
1360 WILLOW ROAD SUITE 103
MENLO PARK CA 94025-1516

MAY 26 2011

In re Application of	:	
Wijmans et al.	:	DECISION ON PETITION
Application No. 13/092,489	:	TO MAKE SPECIAL UNDER
Filed: 4/22/2011	:	THE GREEN TECHNOLOGY
Attorney Docket No. **976-167**	:	PILOT PROGRAM

This is a decision on the petition under 37 CFR 1.102, filed 4/22/2011, to make the above-identified application special under the pilot program for applications pertaining to Green Technologies as set forth in 74 Federal Register Notice 64666 (December 8, 2009) and amended by 75 Federal Register Notice 28554 (May 21, 2010) and 75 Federal Register Notice 69049 (November 10, 2010).

The petition is **GRANTED**.

A grantable petition to make an application special under 37 CFR 1.102 and the pilot program as set forth in 74 FR 64666 must be directed to a nonprovisional application filed under 35 USC 111(a) or be a national stage entry under 35 USC 371, exclusive of any reissue applications.

In order to qualify for special status, the following requirements must be met. 1) The application must have no more than 3 independent claims and no more than 20 total claims. 2) The application must not contain any multiple dependent claims. 3) The petition must state the basis for seeking special status, i.e., the claimed invention either: A) materially enhances the quality of the environment or B) materially contributes to: i) the discovery or development of renewable energy resources, ii) the more efficient utilization and conservation of energy resources, or iii) greenhouse gas emission reduction. 4) If the disclosure is not clear on its face that the claimed invention materially contributes under category (A) or (B), the petition must be accompanied by a statement by the applicant, assignee, or an attorney/agent registered to practice before the Office explaining how the materiality standard is met. 5) A statement that applicant will agree to make an election without traverse in a telephonic interview if a restriction requirement is made by the examiner. 6) The petition to make special must be filed electronically. 7) The petition must be filed at least one day prior to the date that a first Office Action appears in the Patent Application Information Retrieval (PAIR) system. 8) The petition must be accompanied by a request for early publication in compliance with 37 CFR 1.219 and include the publication fee as set forth in 37 CFR 1.18(d).

The requirement for a fee for consideration of the petition to make special for applications pertaining to Green Technologies has been waived.

The instant petition complies with items 1 – 8 above. Accordingly, the above-identified application has been accorded "special" status.

Telephone inquires concerning this decision should be directed to Tom Dunn at 571-272-1171.

The application is being forwarded to the Technology Center Art Unit 1776 for action on the merits commensurate with this decision.

/Tom Dunn/

Tom Dunn
Quality Assurance Specialist
Technology Center 1700

UNITED STATES PATENT AND TRADEMARK OFFICE

Commissioner for Patents
United States Patent and Trademark Office
P.O. Box 1450
Alexandria, VA 22313-1450
www.uspto.gov

MAILED

DEC 13 2011

OFFICE OF PETITIONS

STEIN MCEWEN, LLP
1400 EYE STREET, NW
SUITE 300
WASHINGTON DC 20005

In re Application of :
Kang, et al. : DECISION ON REQUEST
Application No. : 13/092,563 : UDNER 37 CFR 5.25
Filed: April 22, 2011 :
Attorney Docket No. **0002.1162**

TITLE: **CASE FOR ELECTRONIC PEN**

This is a decision on the petition pursuant to 37 C.F.R. § 5.25, filed May 20, 2011, seeking a retroactive license for foreign filing under 35 U.S.C. § 184.

The petition is **DISMISSED**.

37 CFR § 5.25 requires the following:

1. A listing of each foreign country in which the unlicensed patent application material was filed.
2. The dates on which the material was filed in each country,
3. A verified statement (oath or declaration) containing:
   i. An averment that the subject matter in question was not under a secrecy order at the time it was filed abroad, and that it is not currently under a secrecy order.
   ii. A showing that the license has been diligently sought after discovery of the proscribed foreign filing, and
   iii. An explanation of why the material was filed abroad through error and without deceptive intent without the required license under § 5.11 first having been obtained, and
4. The required fee (§ 1.17(g).

The petition is dismissed at this time since the requirements of 37 CFR 5.25(a)(3)(ii) and 37 CFR 5.25(a)(3)(iii) have not been fully met. As to 37 CFR 5.25(a)(3)(ii), petitioner has not made a showing that the license has been diligently sought after discovery of the proscribed foreign filing. Specifically, the date that the joint inventors discovered that a foreign filing license was necessary is not disclosed. Such is required in order to establish that the license is being

diligently sought after discovery of the proscribed foreign filing. Further, petitioner has not established that a diligent effort was made to obtain the license after discovering the proscribed foreign filings insofar as combined verified statement of the join inventors states that:

> [u]pon learning of the Inventions Secrecy Act, 35 USC §§181-188 and a possible need for a foreign filing license for purposes of filing a corresponding U.S. patent application, we prepared this statement but were unable to complete our attempts.

Excerpt taken from "Statement of Facts in Support of Petition for Retroactive License 37 CFR § 5.25", filed May 20, 2011, p. 2.

A showing of diligence requires that petitioner demonstrate that reasonable and timely efforts were made to obtain the license once discovering the proscribed filing. The above-cited statement does not make this showing and is incomplete in that it does not establish that a diligent effort was made to obtain the license contemporaneous with discovering that the license was necessary.

As to 37 CFR 5.25(a)(3)(iii), it is noted that the verified statement should be by the person or persons who had direct knowledge and made the decision to the file in a foreign country before securing a foreign filing license. Further, the statement should reference the proscribed filing and the actual circumstances of its filing. The verified combined statement of the joint inventors, which proscribed filings were made by the "Korean Patent Attorney" who did confer with the joint inventors to determine where the invention was made. The verified statement does not specifically state who made the decision to file in the foreign country before securing the foreign filing license and does not provide a statement from said person or persons with direct knowledge of the circumstances surrounding the decision to file in a foreign country before securing a foreign filing license.

Accordingly, the provisions of 37 CFR § 5.25 have not been fully met. The petition is dismissed. In the absence of response within 60 days of the mailing date of this decision, such dismissal will be made final and the final action under 35 U.S.C. 185 will be taken. Extensions of time may be obtained under 37 CFR 1.136(a).

Further correspondence with respect to this matter should be addressed as follows:

By mail: Commissioner for Patents
United States Patent and Trademark Office
Box 1450
Alexandria, VA 22313-1450

By facsimile: (571) 273-8300
Attn: Office of Petitions

Telephone inquiries should be directed to, Kenya A. McLaughlin, Petitions Attorney, at (571) 272-3222.

/Ramesh Krishnamurthy/
Ramesh Krishnamurthy
Petitions Examiner
Office of Petitions

UNITED STATES PATENT AND TRADEMARK OFFICE

Commissioner for Patents
United States Patent and Trademark Office
P.O. Box 1450
Alexandria, VA 22313-1450
www.uspto.gov

WOOTEN & SHADDOCK, PLC
1435 CROSSWAYS BOULEVARD
SUITE 303
CHESAPEAKE VA 23320

MAILED

MAY 20 2011

OFFICE OF PETITIONS

In re Application of	:	
HUDSON	:	
Application No. 13/092,583	:	DECISION ON PETITION
Filed: April 22, 2011	:	TO MAKE SPECIAL UNDER
Attorney Docket No. 658-002	:	37 CFR 1.102(c)(1)
	:	

This is a decision on the petition under 37 CFR 1.102(c)(1), filed April 22, 2011, to make the above-identified application special based on applicant's age as set forth in M.P.E.P. § 708.02, Section IV.

The petition is **GRANTED**.

A grantable petition to make an application special under 37 CFR 1.102(c)(1) and MPEP § 708.02, Section IV: Applicant's Age must be accompanied by evidence showing that at least one of the applicants is 65 years of age, or more, such as a birth certificate or a statement by applicant. No fee is required

The instant petition includes a declaration statement signed by the applicant. Accordingly, the above-identified application has been accorded "special" status.

Telephone inquiries concerning this decision should be directed to the undersigned at (571) 272-6735.

All other telephone inquiries should be directed to the Office of Data Management at (571) 272-4000.

The application is being forwarded to the Office of Data Management for action on the merits commensurate with this decision.

/Diane C. Goodwyn/
Diane C. Goodwyn
Petitions Examiner
Office of Petitions

UNITED STATES PATENT AND TRADEMARK OFFICE

UNITED STATES DEPARTMENT OF COMMERCE
United States Patent and Trademark Office
Address: COMMISSIONER FOR PATENTS
P.O. Box 1450
Alexandria, Virginia 22313-1450
www.uspto.gov

APPLICATION NO.	FILING DATE	FIRST NAMED INVENTOR	ATTORNEY DOCKET NO.	CONFIRMATION NO.
13/092,702	04/22/2011	Kazuhiko TAKAHASHI	149405	7125

7590 09/12/2011

Oliff & Berridge, PLC
277 South Washington Street
Suite 500
Alexandria, VA 22314

EXAMINER	
ART UNIT	PAPER NUMBER
3739	

MAIL DATE	DELIVERY MODE
09/12/2011	PAPER

Please find below and/or attached an Office communication concerning this application or proceeding.

The time period for reply, if any, is set in the attached communication.

UNITED STATES PATENT AND TRADEMARK OFFICE

Commissioner for Patents
United States Patent and Trademark Office
P.O. Box 1450
Alexandria, VA 22313-1450
www.uspto.gov

Oliff & Berridge, PLC
277 South Washington Street
Suite 500
Alexandria VA 22314

In re Application of	:	
TAKAHASHI, KAZUHIKO et al	:	DECISION ON REQUEST TO
Application No. 13/092,702	:	PARTICIPATE IN PATENT
Filed: April 22, 2011	:	PCT/PROSECUTION HIGHWAY
Attorney Docket No. 7149405	:	PROGRAM AND PETITION
For: MULTIJOINT MANIPULATOR AND ENDOSCOPE SYSTEM HAVING THE SAME	:	37 CFR 1.102(a)

This is a decision on the request to participate in the Patent Prosecution Highway (PPH) program and the petition under 37 CFR 1.102(d), filed August 4, 2010, to make the above-identified application special.

The request and petition are Dismissed.

A grantable request to participate in the PPH pilot program and petition to make special require:

(1) The U.S. application must validly claim priority under 35 U.S.C. 119(a) to one or more applications filed in the JPO;
(2) Applicant must submit a copy of the allowable/patentable claim(s) from the JPO/PCT application(s) along with an English translation thereof and a statement that the English translation is accurate;
(3) All the claims in the U.S. application must sufficiently correspond or be amended to sufficiently correspond to the allowable/patentable claim(s) in the JPO application(s);
(4) Examination of the U.S. application has not begun;
(5) Applicant must submit a copy of all the office actions from each of the JPO/PCT application(s) containing the allowable/patentable claim(s) along with an English translation thereof and a statement that the English translation is accurate; and
(6) Applicant must submit an IDS listing the documents cited by the JPO examiner in the JPO office action along with copies of documents except U.S. patents or U.S. patent application publications.

The request to participate in the PPH program and petition met all conditions except Item #5 above.

The JPO Office action and PCT search report of Nov. 22, 2010 do not show any positive search opinion regarding the patentability of claims 1-5. An Office action and/or search opinion showing the patentability of claims 1-5are required.

Applicant is encouraged to cite and submit all relevant prior art references, if any, to facilitate examination in this application.

Applicant is given a time period of **ONE MONTH or THIRTY DAYS**, whichever is longer, from the mailing date of this decision to correct the deficiencies. **NO EXTENSION OF TIME UNDER 37 CFR 1.136 IS PERMITTED.** If the deficiencies are not corrected with the time period given, the application will await action in its regular turn. Response must be filed via EFS-Web.

Telephone inquiries concerning this decision should be directed to Henry C. Yuen at 571-272-4856.

Petition is **dismissed**.

/Henry C. Yuen/

Henry C. Yuen, Special Programs Examiner
Technology Center 3700 – Mechanical Engineering,
Manufacturing and Products
571-272-4856

UNITED STATES PATENT AND TRADEMARK OFFICE

UNITED STATES DEPARTMENT OF COMMERCE
United States Patent and Trademark Office
Address: COMMISSIONER FOR PATENTS
P.O. Box 1450
Alexandria, Virginia 22313-1450
www.uspto.gov

APPLICATION NO.	FILING DATE	FIRST NAMED INVENTOR	ATTORNEY DOCKET NO.	CONFIRMATION NO.
13/092,702	04/22/2011	Kazuhiko TAKAHASHI	149405	7125

7590 10/06/2011

Oliff & Berridge, PLC
277 South Washington Street
Suite 500
Alexandria, VA 22314

EXAMINER	
ART UNIT	PAPER NUMBER
3739	

MAIL DATE	DELIVERY MODE
10/06/2011	PAPER

Please find below and/or attached an Office communication concerning this application or proceeding.

The time period for reply, if any, is set in the attached communication.

UNITED STATES PATENT AND TRADEMARK OFFICE

Commissioner for Patents
United States Patent and Trademark Office
P.O. Box 1450
Alexandria, VA 22313-1450
www.uspto.gov

Oliff & Berridge, PLC
277 South Washington Street
Suite 500
Alexandria VA 22314

In re Application of TAKAHASHI, KAZUHIKO , et al Application No. 13/092,702 Filed: April 22, 2011 Attorney Docket No. 149405 For: MULTIJOINT MANIPULATOR AND AND ENDOSCOPE SYSTEM HAVING THE SAME	:	DECISION ON REQUEST TO PARTICIPATE IN PATENT PCT/PROSECUTION HIGHWAY PROGRAM AND PETITION TO MAKE SPECIAL UNDER 37 CFR 1.102(a)

This is a decision on the request to participate in the Patent Prosecution Highway (PPH) program and the petition under 37 CFR 1.102(a), filed October 4, 2011 to make the above-identified application special.

The request and petition are granted.

A grantable request to participate in the PPH pilot program and petition to make special require:

(1) The U.S. application must validly claim priority under 35 U.S.C. 119(a) to one or more applications filed in the JPO;
(2) Applicant must submit a copy of the allowable/patentable claim(s) from the JPO/PCT application(s) along with an English translation thereof and a statement that the English translation is accurate;
(3) All the claims in the U.S. application must sufficiently correspond or be amended to sufficiently correspond to the allowable/patentable claim(s) in the JPO application(s);
(4) Examination of the U.S. application has not begun;
(5) Applicant must submit a copy of all the office actions from each of the JPO/PCT application(s) containing the allowable/patentable claim(s) along with an English translation thereof and a statement that the English translation is accurate; and
(6) Applicant must submit an IDS listing the documents cited by the JPO examiner in the JPO office action along with copies of documents except U.S. patents or U.S. patent application publications.

In light of the petition being properly submitted, the request to participate in the PPH program and the petition comply with the above requirements. Accordingly, the above-identified application has been accorded "special" status.

The applicant is encouraged to cite and submit all relevant prior art references, if any, to facilitate examination in this application. Upon completion of pre-examination processing, this application will be forwarded to an examiner for examination.

Telephone inquiries concerning this decision should be directed to Henry C. Yuen at 571-272-4485. All other inquiries concerning the examination or status of the application should be directed to Linda Dvorak, SPE of Art Unit 3739, and 571-272-4764 for Class 600 and also accessible in the PAIR system at http://www.uspto.gov/ebc.index.html.

Petition is **granted**.

/Henry C. Yuen/

Henry C. Yuen, Special Programs Examiner
Technology Center 3700 – Mechanical Engineering,
Manufacturing and Products
571-272-4856

UNITED STATES PATENT AND TRADEMARK OFFICE

Commissioner for Patents
United States Patent and Trademark Office
P.O. Box 1450
Alexandria, VA 22313-1450
www.uspto.gov

MAILED

JUN 21 2011

OFFICE OF PETITIONS

ALLISON JOHNSON PA
3500 AMERICAN BLVD W SUITE 690
MINNEAPOLIS MN 55431

In re Application of :
Laknath Anslem Goonetilleke :
Application No. 13/092,785 : DECISION REFUSING STATUS
Filed: April 22, 2011 : UNDER 37 CFR 1.47(b)
Attorney Docket No. 208-056US2 :

This is in response to the petition under 37 C.F.R. § 1.47(b), filed June 8, 2011.

The petition under 37 C.F.R. § 1.47(b) is **DISMISSED**.

Rule 47 applicant is given TWO MONTHS from the mailing date of this decision to reply, correcting the below-noted deficiencies. Any reply should be entitled "Request for Reconsideration of Petition Under 37 C.F.R. § 1.47(b)," and should only address the deficiencies noted below, except that the reply may include an oath or declaration executed by the non-signing inventor. **Failure to respond will result in abandonment of the application.** Any extensions of time will be governed by 37 C.F.R. § 1.136(a).

A grantable petition under 37 CFR 1.47(b) requires: (1) proof that the non-signing inventor cannot be reached or refuses to sign the oath or declaration after having been presented with the application papers (specification, claims and drawings); (2) an acceptable oath or declaration in compliance with 37 CFR 1.63; (3) the petition fee; (4) a statement of the last known address of the non-signing inventor; (5) proof that the Rule 47(b) applicant has sufficient proprietary interest in the subject matter to justify the filing of the application; and (6) proof of irreparable damage. The instant petition does not satisfy requirement (2) above.

With respect to requirement (2), MPEP 409.03(b) states:

> Where an application is executed by one other than the inventor, the declaration required by 37 CFR 1.63 must state the full name, residence, post office address, and citizenship of the nonsigning inventor. Also, the title or position of the person signing must be stated if signing on behalf of a corporation under 37 CFR 1.47(b).

Here, the declaration is not acceptable because it does not identify the post office address of the non-signing inventor. Rather, the post office address listed on the declaration is that of the assignee.

Further correspondence with respect to this matter should be addressed as follows:

By mail: Mail Stop Petitions
Commissioner for Patents
P.O. Box 1450
Alexandria VA 22313-1450

By FAX: (571)273-8300
Attn: Office of Petitions

Telephone inquiries related to this decision may be directed to the undersigned at (571)272-3207.

Cliff Congo
Petitions Attorney
Office of Petitions

UNITED STATES PATENT AND TRADEMARK OFFICE

Commissioner for Patents
United States Patent and Trademark Office
P.O. Box 1450
Alexandria, VA 22313-1450
www.uspto.gov

ALLISON JOHNSON PA
3500 AMERICAN BLVD W SUITE 690
MINNEAPOLIS MN 55431

MAILED
AUG 01 2011
OFFICE OF PETITIONS

In re Application of :
Laknath Anslem Goonetilleke :
Application No. 13/092,785 : DECISION REFUSING STATUS
Filed: April 22, 2011 : UNDER 37 CFR 1.47(b)
Attorney Docket No. 208-056US2 :

This is in response to the renewed petition under 37 C.F.R. § 1.47(b), filed June 29, 2011.

The petition under 37 C.F.R. § 1.47(b) is **DISMISSED**.

Rule 47 applicant is given TWO MONTHS from the mailing date of this decision to reply, correcting the below-noted deficiencies. Any reply should be entitled "Request for Reconsideration of Petition Under 37 C.F.R. § 1.47(b)," and should only address the deficiencies noted below, except that the reply may include an oath or declaration executed by the non-signing inventor. **Failure to respond will result in abandonment of the application.** Any extensions of time will be governed by 37 C.F.R. § 1.136(a).

A grantable petition under 37 CFR 1.47(b) requires: (1) proof that the non-signing inventor cannot be reached or refuses to sign the oath or declaration after having been presented with the application papers (specification, claims and drawings); (2) an acceptable oath or declaration in compliance with 37 CFR 1.63; (3) the petition fee; (4) a statement of the last known address of the non-signing inventor; (5) proof that the Rule 47(b) applicant has sufficient proprietary interest in the subject matter to justify the filing of the application; and (6) proof of irreparable damage. The instant petition does not satisfy requirement (2) above.

With her renewed petition, petitioner stated that she was attaching a declaration meeting the requirements of 37 CFR 1.63. However, the declaration was not submitted with the petition. The Office only received a 2 page petition and a 1 page transmittal letter.

Further correspondence with respect to this matter should be addressed as follows:

By mail: Mail Stop Petitions
Commissioner for Patents
P.O. Box 1450
Alexandria VA 22313-1450

By FAX: (571)273-8300
Attn: Office of Petitions

Telephone inquiries related to this decision may be directed to the undersigned at (571)272-3207.

Cliff Congo
Petitions Attorney
Office of Petitions

UNITED STATES PATENT AND TRADEMARK OFFICE

Commissioner for Patents
United States Patent and Trademark Office
P.O. Box 1450
Alexandria, VA 22313-1450
www.uspto.gov

ALLISON JOHNSON PA
3500 AMERICAN BLVD W SUITE 690
MINNEAPOLIS MN 55431

MAILED
AUG 29 2011
OFFICE OF PETITIONS

In re Application of :
Laknath Anslem Goonetilleke :
Application No. 13/092,785 : DECISION ACCORDING STATUS
Filed: April 22, 2011 : UNDER 37 CFR 1.47(b)
Attorney Docket No. 208-056US2 :

This is in response to the renewed petition under 37 C.F.R. § 1.47(b), filed July 19, 2011.

The petition under 37 C.F.R. § 1.47(b) is **GRANTED**.

With the instant renewed petition, Rule 47 Applicant has submitted a proper 37 CFR 1.63 declaration.

The above-identified application and papers have been reviewed and found to be in compliance with 37 CFR 1.47(a). Accordingly, the above-identified application is hereby accorded Rule 1.47(a) status. As provided in 37 CFR 1.47(c), this Office will forward notice of this application's filing to the non-signing inventor at the last known address provided in the petition. Notice of the filing of this application will also be published in the Official Gazette.

The application is being forwarded to the Office of Patent Application Processing for pre-examination processing.

Telephone inquiries related to this decision may be directed to the undersigned at (571)272-3207.

Cliff Congo
Petitions Attorney
Office of Petitions

UNITED STATES PATENT AND TRADEMARK OFFICE

Commissioner for Patents
United States Patent and Trademark Office
P.O. Box 1450
Alexandria, VA 22313-1450
www.uspto.gov

LAKNATH ANSLEM GOONETILLEKE
4440 GLACIER LANE
PLYMOUTH MN 55446

MAILED
AUG 29 2011
OFFICE OF PETITIONS

In re Application of :
Laknath Anslem Goonetilleke :
Application No. 13/092,785 :
Filed: April 22, 2011 : LETTER
Title: An Effervescent Carrier, A Method of Changing the Flavor of Milk and an Effervescent Tablet for Changing the Flavor of Milk :

Dear Laknath Anslem Goonetilleke:

You are named as the sole inventor in the above-identified United States patent application filed under the provisions of 35 USC 116 (United States Code) and 37 CFR 1.47(b), Rules of Practice in Patent Cases. Should a patent be granted on the application you will be designated therein as the sole inventor.

As the named inventor you are entitled to inspect any paper in the file wrapper of the application, order copies of all or any part thereof (at a prepaid cost per 37 CFR 1.19) or make your position of record in the application. Alternatively, you may arrange to do any of the preceding through a registered patent attorney or agent presenting written authorization from you. If you care to join the application, agent of record would presumably assist you. Joining in the application would entail the filing of an appropriate oath or declaration by you pursuant to 37 CFR 1.63.

Telephone inquiries regarding this communication should be directed to Petitions Attorney Cliff Congo at (571)272-3207. Requests for information regarding your application should be directed to the File Information Unit at (703) 308-2733. Information regarding how to pay for and order a copy of the application, or a specific paper in the application, should be directed to the Certification Division at (703) 308-9726 or 1-800-972-6382 (outside the Washington D.C. area).

Cliff Congo
Petitions Attorney
Office of Petitions

UNITED STATES PATENT AND TRADEMARK OFFICE

Commissioner for Patents
United States Patent and Trademark Office
P.O. Box 1450
Alexandria, VA 22313-1450
www.uspto.gov

FAEGRE & BENSON LLP
PATENT DOCKETING - INTELLECTUAL PROPERTY
2200 WELLS FARGO CENTER
90 SOUTH SEVENTH STREET
MINNEAPOLIS MN 55402-3901

MAILED

NOV 04 2011

OFFICE OF PETITIONS

In re Application of:	:	
Lewis et al.	:	
Application No. 13/092823	:	DECISION GRANTING
Filing or 371(c) Date: 04/22/2011	:	PETITION UNDER
Title of Invention:	:	37 CFR 1.47(a)
METHODS AND COMPOSITIONS FOR	:	
ISLET CELL PRESERVATION	:	

This is in response to petition under to 37 CFR § 1.47(a)," filed October 11, 2011, to allow the other inventor(s) to proceed with the application on behalf of himself or herself and the nonsigning inventor.

The petition is **granted**.

The above-identified application and papers have been reviewed and found in compliance with 37 CFR 1.47(a). This application is hereby accorded Rule 1.47(a) status.

Petitioner has shown that the non-signing inventor, Leland Shapiro, refuses to join in the above-identified application.

As provided in Rule 1.47(a), this Office will forward notice of this application's filing to the non-signing inventor at the addresses given in the Petition. Notice of the filing of this application will also be published in the Official Gazette.

The application file is being referred to the Office of Patent Application Processing for continued processing in the normal course of business.

Telephone inquiries related to this decision may be directed to the undersigned at (571) 272-3232.

/DLW/

Derek L. Woods
Attorney
Office of Petitions

UNITED STATES PATENT AND TRADEMARK OFFICE

Commissioner for Patents
United States Patent and Trademark Office
P.O. Box 1450
Alexandria, VA 22313-1450
www.uspto.gov

MR. LELAND SHAPIRO
8765 E. 29TH PLACE
DENVER, CO 80220

MAILED

NOV 04 2011

OFFICE OF PETITIONS

In re Application of:
Lewis et al.
Application No. 13/092823
Filing or 371(c) Date: 04/22/2011
Title of Invention:
METHODS AND COMPOSITIONS FOR
ISLET CELL PRESERVATION

LETTER

Dear Mr. Shapiro:

You are named as a joint inventor in the above-identified United States patent application filed under the provisions of 35 U.S.C. 116 (United States Code) and 37 CFR 1.47(a), Rules of Practice in Patent Cases. Should a patent be granted on the application you will be designated therein as a joint inventor.

As a named inventor you are entitled to inspect any paper in the file wrapper of the application, order copies of all or any part thereof (at a prepaid cost per 37 CFR 1.19) or make your position of record in the application. Alternatively, you may arrange to do any of the preceding through a registered patent attorney or agent presenting written authorization from you. If you care to join the application, counsel of record (see below) would presumably assist you. Joining in the application would entail the filing of an appropriate oath or declaration by you pursuant to 37 CFR 1.63.

Telephone inquiries regarding this communication should be directed to the undersigned at (571) 272-3232. Requests for information regarding your application should be directed to the File Information Unit at (703) 308-2733. Information regarding how to pay for and order a copy of the application, or a specific paper in the application, should be directed to Certification Division at (703) 308-9726 or 1-800-972-6382 (outside the Washington D.C. area).

/DLW/

Derek L. Woods
Attorney
Office of Petitions

CC: FAEGRE & BENSON LLP
PATENT DOCKETING - INTELLECTUAL PROPERTY
2200 WELLS FARGO CENTER
90 SOUTH SEVENTH STREET
MINNEAPOLIS MN 55402-3901

UNITED STATES PATENT AND TRADEMARK OFFICE

Commissioner for Patents
United States Patent and Trademark Office
P.O. Box 1450
Alexandria, VA 22313-1450
www.uspto.gov

FAEGRE & BENSON LLP
PATENT DOCKETING - INTELLECTUAL PROPERTY
2200 WELLS FARGO CENTER
90 SOUTH SEVENTH STREET
MINNEAPOLIS MN 55402-3901

MAILED

NOV 04 2011

OFFICE OF PETITIONS

In re Application of:
Lewis et al.
Application No. 13/092825
Filing or 371(c) Date: 04/22/2011
Title of Invention:
METHODS AND COMPOSITIONS FOR TREATMENT OF GRAFT REJECTION AND PROMOTION OF GRAFT SURVIVAL

DECISION GRANTING PETITION UNDER 37 CFR 1.47(a)

This is in response to petition under to 37 CFR § 1.47(a)," filed October 11, 2011, to allow the other inventor(s) to proceed with the application on behalf of himself or herself and the nonsigning inventor.

The petition is **granted**.

The above-identified application and papers have been reviewed and found in compliance with 37 CFR 1.47(a). This application is hereby accorded Rule 1.47(a) status.

Petitioner has shown that the non-signing inventor, Leland Shapiro, refuses to join in the above-identified application.

As provided in Rule 1.47(a), this Office will forward notice of this application's filing to the non-signing inventor at the addresses given in the Petition. Notice of the filing of this application will also be published in the Official Gazette.

The application file is being referred to the Office of Patent Application Processing for continued processing in the normal course of business.

Telephone inquiries related to this decision may be directed to the undersigned at (571) 272-3232.

/DLW/

Derek L. Woods
Attorney
Office of Petitions

UNITED STATES PATENT AND TRADEMARK OFFICE

Commissioner for Patents
United States Patent and Trademark Office
P.O. Box 1450
Alexandria, VA 22313-1450
www.uspto.gov

MR. LELAND SHAPIRO
8765 E. 29TH PLACE
DENVER, CO 80220

MAILED

NOV 04 2011

OFFICE OF PETITIONS

In re Application of:
Lewis et al.
Application No. 13/092825
Filing or 371(c) Date: 04/22/2011
Title of Invention:
METHODS AND COMPOSITIONS FOR TREATMENT OF GRAFT REJECTION AND PROMOTION OF GRAFT SURVIVAL

LETTER

Dear Mr. Shapiro:

You are named as a joint inventor in the above-identified United States patent application filed under the provisions of 35 U.S.C. 116 (United States Code) and 37 CFR 1.47(a), Rules of Practice in Patent Cases. Should a patent be granted on the application you will be designated therein as a joint inventor.

As a named inventor you are entitled to inspect any paper in the file wrapper of the application, order copies of all or any part thereof (at a prepaid cost per 37 CFR 1.19) or make your position of record in the application. Alternatively, you may arrange to do any of the preceding through a registered patent attorney or agent presenting written authorization from you. If you care to join the application, counsel of record (see below) would presumably assist you. Joining in the application would entail the filing of an appropriate oath or declaration by you pursuant to 37 CFR 1.63.

Telephone inquiries regarding this communication should be directed to the undersigned at (571) 272-3232. Requests for information regarding your application should be directed to the File Information Unit at (703) 308-2733. Information regarding how to pay for and order a copy of the application, or a specific paper in the application, should be directed to Certification Division at (703) 308-9726 or 1-800-972-6382 (outside the Washington D.C. area).

/DLW/

Derek L. Woods
Attorney
Office of Petitions

CC: FAEGRE & BENSON LLP
PATENT DOCKETING - INTELLECTUAL PROPERTY
2200 WELLS FARGO CENTER
90 SOUTH SEVENTH STREET
MINNEAPOLIS MN 55402-3901

Doc Code: PPH.PCT.652
Document Description: Petition to make special under PCT-Patent Pros Hwy

PTO/SB/20PCT-CN (06-11)
Approved for use through 01/31/2012. OMB 0651-0058
U.S. Patent and Trademark Office; U. S. DEPARTMENT OF COMMERCE
Under the Paperwork Reduction Act of 1995, no persons are required to respond to a collection of information unless it displays a valid OMB control number.

REQUEST FOR PARTICIPATION IN THE PATENT COOPERATION TREATY - PATENT PROSECUTION HIGHWAY (PCT-PPH) PILOT PROGRAM BETWEEN THE STATE INTELLECTUAL PROPERTY OFFICE OF THE P.R.C. (SIPO) AND THE USPTO

Application No:	13/092828	Filing date:	April 22, 2011
First Named Inventor:	Hui XIA		
Title of the Invention:	METHOD AND APPARATUS FOR CONTENT SHARING		

THIS REQUEST FOR PARTICIPATION IN THE PCT-PPH PILOT PROGRAM ALONG WITH THE REQUIRED DOCUMENTS MUST BE SUBMITTED VIA EFS-WEB. INFORMATION REGARDING EFS-WEB IS AVAILABLE AT HTTP://WWW.USPTO.GOV/EBC/EFS_HELP.HTML

APPLICANT HEREBY REQUESTS PARTICIPATION IN THE PCT-PPH PROGRAM AND PETITIONS TO MAKE THE ABOVE-IDENTIFIED APPLICATION SPECIAL UNDER THE PCT-PPH PROGRAM.

The above-identified application is (1) a national stage entry of the corresponding PCT application, or (2) a national stage entry of another PCT application which claims priority to the corresponding PCT application, or (3) a national application that claims domestic/ foreign priority to the corresponding PCT application, or (4) a national application which forms the basis for the priority claim in the corresponding PCT application, or (5) a continuing application of a U.S. application that satisfies one of (1) to (4) above, or (6) a U.S. application that claims domestic benefit to a U.S. provisional application which forms the basis for the priority claim in the corresponding PCT application.

The corresponding PCT application number(s) is/are: PCT/CN2009/074580

The international filing date of the corresponding PCT application(s) is/are: October 23, 2009

I. List of Required Documents:

a. **A copy of the latest international work product (WO/ISA, WO/IPEA, or IPER) in the above-identified corresponding PCT application(s)**

☑ Is attached.

☐ Is not attached because the document is already in the U.S. application.

b. **A copy of all claims which were indicated as having novelty, inventive step and industrial applicability in the above-identified corresponding PCT application(s).**

☑ Is attached.

☐ Is not attached because the document is already in the U.S. application.

c. **English translations of the documents in a. and b. above are attached (if the documents are not in the English language). A statement that the English translation is accurate is attached for the document in b. above.**

This collection of information is required by 35 U.S.C. 119, 37 CFR 1.55, and 37 CFR 1.102(d). The information is required to obtain or retain a benefit by the public, which is to file (and by the USPTO to process) an application. Confidentiality is governed by 35 U.S.C. 122 and 37 CFR 1.11 and 1.14. This collection is estimated to take 2 hours to complete, including gathering, preparing, and submitting the completed application form to the USPTO. Time will vary depending upon the individual case. Any comments on the amount of time you require to complete this form and/or suggestions for reducing this burden should be sent to the Chief Information Officer, U.S. Patent and Trademark Office, U.S. Department of Commerce, P.O. Box 1450, Alexandria, VA 22313-1450. DO NOT SEND FEES OR COMPLETED FORMS TO THIS ADDRESS.

PTO/SB/20PCT-CN (06-11)
Approved for use through 01/31/2012. OMB 0651-0058
U.S.Patent and Trademark Office; U.S. DEPARTMENT OF COMMERCE
Under the Paperwork Reduction Act of 1995, no persons are required to respond to a collection of information unless it displays a valid OMB control number.

REQUEST FOR PARTICIPATION IN THE PCT-PPH PILOT PROGRAM BETWEEN THE SIPO AND THE USPTO

(continued)

Application No.:	13/092828
First Named Inventor:	Hui XIA

d. **(1) An information disclosure statement listing the documents cited in the international work products (ISR, WO/ISA, WO/IPEA, IPER) of the corresponding PCT application.**

☐ Is attached

☑ Has already been filed in the above-identified U.S. application on April 22, 2011

(2) Copies of all documents (except) for U.S. patents or U.S. patent application publications)

☐ Are attached.

☑ Have already been filed in the above-identified U.S. application on April 22, 2011

II. Claims Correspondence Table:

Claims in US Application	Patentable Claims in the corresponding PCT Application	Explanation regarding the correspondence
1	2	substantially the same
3	3	substantially the same
4	4	substantially the same
5	5	substantially the same
6	6	substantially the same
7	7	substantially the same
9	7	substantially the same
10	7	substantially the same
11	7	substantially the same
12	7	substantially the same
13	9	substantially the same
15	10	substantially the same
16	11	substantially the same
17	12	substantially the same
18	13	substantially the same
19	14	substantially the same

III. All the claims in the US application sufficiently correspond to the patentable claims in the corresponding PCT application.

Signature Robert D McCutcheon	Date 3/15/2012
Name (Print/Typed) Robert D. McCutcheon	Registration Number 38717

UNITED STATES PATENT AND TRADEMARK OFFICE

UNITED STATES DEPARTMENT OF COMMERCE
United States Patent and Trademark Office
Address: COMMISSIONER FOR PATENTS
P.O. Box 1450
Alexandria, Virginia 22313-1450
www.uspto.gov

APPLICATION NO.	FILING DATE	FIRST NAMED INVENTOR	ATTORNEY DOCKET NO.	CONFIRMATION NO.
13/092,879	04/22/2011	John Wayne STRAKA	TP-STRJ-ECP1	7574

7590 10/14/2011

SINORICA, LLC
19785 Crystal Rock Drive
Suite 207
Germantown, MD 20874

EXAMINER	
STAMBER, ERIC W	

ART UNIT	PAPER NUMBER
3622	

NOTIFICATION DATE	DELIVERY MODE
10/14/2011	ELECTRONIC

DECISION DISMISSING PETITION UNDER 37 CFR 1.138(c)

The declaration of express abandonment will not be recognized

This is in response to the petition under 37 CFR 1.138(c), for express abandonment to avoid publication of the above-identified application.

The petition is dismissed.

The express abandonment will **not** be recognized for the reason(s) indicated below:

1. ☑ The petition under 37 CFR 1.138(c) was not filed in sufficient time to permit the appropriate officials to recognize the abandonment and remove the application from the publication process.
2. ☐ The petition was not signed by a party authorized by 37 CFR 1.33(b)(1), (3) or (4).
3. ☐ The Application was published in compliance with 35 U.S.C. 122(b), and it is available on the USPTO web site at http://www.uspto.gov/patft/index.html.
4. ☐ Petition fee was not paid.

The application **has/will be published** as scheduled.

Telephone inquiries should be directed to the Office of Data Management at (571) 272-4200.

Patent Publication Branch
Office of Data Management

Doc Code: PET.AUTO **Document Description: Petition automatically granted by EFS-Web**	PTO/SB/83 U.S. Patent and Trademark Office Department of Commerce

Electronic Petition Request	**REQUEST FOR WITHDRAWAL AS ATTORNEY OR AGENT AND CHANGE OF CORRESPONDENCE ADDRESS**
Application Number	13092883
Filing Date	22-Apr-2011
First Named Inventor	Yi Cui
Art Unit	1724
Examiner Name	
Attorney Docket Number	STAN-149/01US 197110-2097
Title	WATER STERILIZATION DEVICES INCLUDING NANOSTRUCTURES AND USES THEREOF

◉ Please withdraw me as attorney or agent for the above identified patent application and the practitioners of record associated with Customer Number: 58249

The reason(s) for this request are those described in 37 CFR:

10.40(b)(4)

Certifications

☒ I/We have given reasonable notice to the client, prior to the expiration of the response period, that the practitioner(s) intend to withdraw from employment

☒ I/We have delivered to the client or a duly authorized representative of the client all papers and property (including funds) to which the client is entitled

☒ I/We have notified the client of any responses that may be due and the time frame within which the client must respond

Change the correspondence address and direct all future correspondence to the first named inventor or assignee that has properly made itself of record pursuant to 37 CFR 3.71:

Name	Board of Trustees of the Leland Stanford Junior Un
Address	1705 El Camino Real
City	Palo Alto
State	CA
Postal Code	94306
Country	US

I am authorized to sign on behalf of myself and all withdrawing practitioners.	
Signature	/William S. Galliani/
Name	William S. Galliani
Registration Number	33885

UNITED STATES PATENT AND TRADEMARK OFFICE

Commissioner for Patents
United States Patent and Trademark Office
P.O. Box 1450
Alexandria, VA 22313-1450
www.uspto.gov

Decision Date : February 13, 2012

In re Application of :

Yi Cui

Application No : 13092883

Filed : 22-Apr-2011

Attorney Docket No : STAN-149/01US 197110-2097

DECISION ON REQUEST TO WITHDRAW AS ATTORNEY/AGENTOF RECORD

This is an electronic decision on the Request to Withdraw as attorney or agent of record under 37 CFR § 1.36(b), filed February 13, 2012

The request is **APPROVED.**

The request was signed by William S. Galliani (registration no. 33885) on behalf of all attorneys/agents associated with Customer Number 58249 . All attorneys/agents associated with Cusotmer Number 58249 have been withdrawn.

Since there are no remaining attorneys of record, all future communications from the Office will be directed to the first named inventor or assignee that has properly made itself of record pursuant to 37 CFR 3.71, with correspondence address:

Name	Board of Trustees of the Leland Stanford Junior Un
Name2	
Address 1	1705 El Camino Real
Address 2	
City	Palo Alto
State	CA
Postal Code	94306
Country	US

As a reminder, requester is required to inform the first named inventor or assignee that has properly made itself of record pursuant to 37 CFR 3.71 of the electronically processed petition.

Telephone inquiries concerning this decision should be directed to the Patent Electronic Business Center (EBC) at 866-217-9197.

Office of Petitions

BARNES & THORNBURG LLP

11 South Meridian Street
Indianapolis, Indiana 46204
(317) 236-1313
(317) 231-7433 Fax

IN THE UNITED STATES PATENT AND TRADEMARK OFFICE

Application No.:	13/092,916
Confirmation No.:	7677
Art Unit:	2836
Examiner:	Unknown
Application Title:	MODULAR SYSTEM FOR UNATTENDED ENERGY GENERATION AND STORAGE
First Named Applicant:	Jonathan W. Kimball
Filed:	4/23/2011
Attorney Docket:	39605-216432

ELECTRONICALLY SUBMITTED ON:

MAY 11, 2011

STATEMENTS OF SPECIAL STATUS FOR ELIGIBILITY OF GREEN TECHNOLOGY PILOT PROGRAM

Mail Stop PETITIONS
Commissioner of Patents
P.O. Box 1450
Alexandria, Virginia 22313-1450

Sir:

In furtherance of a contemporaneously filed Petition to Make Special Under the Green Technology Pilot Program, Applicants respectfully submit the following:

STATEMENTS IN SUPPORT OF PETITION, which begin on page 2 of this paper.

STATEMENTS IN SUPPORT OF PETITION TO MAKE SPECIAL

Applicants respectfully submit the following statements in support of a contemporaneously-filed Petition to Make Special Under the Green Technology Pilot Program.

STATEMENT OF BASIS FOR SPECIAL STATUS

Applicants respectfully submit that U.S. Patent Application Serial No. 13/092,916, entitled "Modular System for Unattended Energy Generation and Storage," materially contributes to the development of renewable energy resources.

STATEMENT OF MATERIALITY STANDARD

The present application materially contributes to the development of renewable energy resources by disclosing methods and devices related to the generation, conversion, storage, and distribution of electrical energy from renewable energy sources. Embodiments of the present application disclose an electrical power supply and associated method for supplying electrical energy from a renewable energy source, such as a solar panel, to an electrical load. A controller of the electrical power supply utilizes a maximum power point tracking method to substantially maximize the power drawn from the renewable energy source, which may improve the efficiency of the electrical power supply. Additionally, the controller may cause energy from the renewable energy source to be stored to or supplied from an energy storage device based on the demands of the electrical load and/or the available power of the renewable energy source, which may also increase the overall efficiency of the electrical power supply. Accordingly, for at least these reasons, Applicants respectfully submit that the present application materially contributes to the development of renewable energy resources.

STATEMENT OF AGREEMENT TO ELECTION WITHOUT TRAVERSE

Should the Office determine that the claims of the present application are not obviously directed to a single invention, Applicants agree to make an election without traverse in a telephonic interview and elect an invention that meets the eligibility requirements for the Green Technology Pilot Program.

REQUEST FOR EARLY PUBLICATION UNDER 37 CFR § 1.219

Applicants hereby respectfully request early publication under 37 C.F.R. § 1.219. The publication fee set forth in 37 C.F.R. § 1.18(d) accompanies this request.

CONCLUSION

Applicants respectfully request acceptance of the Petition to Make Special Under the Green Technology Pilot Program. Applicants hereby authorize the Commissioner to charge any fees that may be due in connection with the filing of this petition and any shortage of fees, and credit any overpayment of fees, to the Account of Barnes & Thornburg, Deposit Account No. 10-0435 with reference to file 39605-216432.

Respectfully submitted,

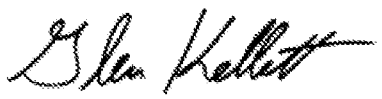

Glen M. Kellett
Registration No. 60,202
Barnes & Thornburg LLP
11 South Meridian Street
Indianapolis, Indiana 46204-3335
Telephone: (317) 261-7959
Fax: (317) 231-7433

Doc Code: PET.GREEN
Document Description: Petition for Green Tech Pilot

PTO/SB/420 (03-11)

PETITION TO MAKE SPECIAL UNDER THE GREEN TECHNOLOGY PILOT PROGRAM

Attorney Docket Number: 39605-216432	Application Number (if known): 13/092,916	Filing date: 04/23/2011

First Named Inventor: Jonathan W. Kimball

Title: Modular System For Unattended Energy Generation and Storage

APPLICANT HEREBY REQUESTS TO PARTICIPATE IN THE GREEN TECHNOLOGY PILOT PROGRAM FOR THE ABOVE-IDENTIFIED APPLICATION. See Instruction Sheet on page 2.

This petition must be timely filed electronically using the USPTO electronic filing system, EFS-Web.

1. By filing this petition:

   Applicant is requesting early publication: Applicant hereby requests early publication under 37 CFR 1.219 and the publication fee set forth in 37 CFR 1.18(d) accompanies this request.

2. By filing this petition: applicant is agreeing to make an election without traverse in a telephonic interview and elect an invention that meets the eligibility requirements for the Green Technology Pilot Program, if the Office determines that the claims are not obviously directed to a single invention. See Instruction Sheet.

3. This request is accompanied by statements of special status for the eligibility requirement.

4. The application contains no more than three (3) independent claims and twenty (20) total claims.

5. The application does not contain any multiple dependent claims.

6. Other attachments: STATEMENTS OF SPECIAL STATUS

Signature /Glen M. Kellett/	Date 05/11/2011
Name (Print/Typed) Glen M. Kellett	Registration Number 60,202

Note: *Signatures of all the inventors or assignees of record of the entire interest or their representative(s) are required in accordance with 37 CFR 1.33 and 11.18. Please see 37 CFR 1.4(d) for the form of the signature. If necessary, submit multiple forms for more than one signature, see below*.*

☐ *Total of _____ forms are submitted.

If you need assistance in completing the form, call 1-800-PTO-9199 and select option 2.

UNITED STATES PATENT AND TRADEMARK OFFICE

UNITED STATES DEPARTMENT OF COMMERCE
United States Patent and Trademark Office
Address: COMMISSIONER FOR PATENTS
P.O. Box 1450
Alexandria, Virginia 22313-1450
www.uspto.gov

APPLICATION NO.	FILING DATE	FIRST NAMED INVENTOR	ATTORNEY DOCKET NO.	CONFIRMATION NO.
13/092,916	04/23/2011	Jonathan W. Kimball	39605-216432	7677

23643 7590 05/26/2011

BARNES & THORNBURG LLP
11 SOUTH MERIDIAN
INDIANAPOLIS, IN 46204

EXAMINER	
ART UNIT	PAPER NUMBER
2836	

NOTIFICATION DATE	DELIVERY MODE
05/26/2011	ELECTRONIC

Please find below and/or attached an Office communication concerning this application or proceeding.

The time period for reply, if any, is set in the attached communication.

Notice of the Office communication was sent electronically on above-indicated "Notification Date" to the following e-mail address(es):

indocket@btlaw.com

UNITED STATES PATENT AND TRADEMARK OFFICE

Commissioner for Patents
United States Patent and Trademark Office
P.O. Box 1450
Alexandria, VA 22313-1450
www.uspto.gov

BARNES & THORNBURG LLP
11 SOUTH MERIDIAN
INDIANAPOLIS IN 46204

In re Application of	:	
KIMBALL et al.	:	DECISION ON PETITION
Application No. 13/092,916	:	TO MAKE SPECIAL UNDER
Filed: April 23, 2011	:	THE GREEN TECHNOLOGY
Attorney Docket No. 39605-216432	:	PILOT PROGRAM

This is a decision on the petition under 37 CFR 1.102, filed on May 11, 2011, to make the above-identified application special under the pilot program for applications pertaining to Green Technologies as set forth 74 Federal Register Notice 64666 (December 8, 2009) and amended by 75 Federal Register Notice 28554 (May 21, 2010) and 75 Federal Register Notice 69049 (November 10, 2010).

The petition is **GRANTED**.

A grantable petition to make an application special under 37 CFR 1.102 and the pilot program as set forth in 74 FR 64666 must be directed to a nonprovisional application filed under 35 USC 111(a) or be a national stage entry under 35 USC 371, exclusive of any reissue applications.

In order to qualify for special status, the following requirements must be met. 1) The application must have no more than 3 independent claims and no more than 20 total claims. 2) The application must not contain any multiple dependent claims. 3) The petition must state the basis for seeking special status, i.e., the claimed invention either: A) materially enhances the quality of the environment or B) materially contributes to: i) the discovery or development of renewable energy resources, ii) the more efficient utilization and conservation of energy resources, or iii) greenhouse gas emission reduction. 4) If the disclosure is not clear on its face that the claimed invention materially contributes under category (A) or (B), the petition must be accompanied by a statement by the applicant, assignee, or an attorney/agent registered to practice before the Office explaining how the materiality standard is met. 5) A statement that applicant will agree to make an election without traverse in a telephonic interview if a restriction requirement is made by the examiner. 6) The petition to make special must be filed electronically. 7) The petition must be filed at least one day prior to the date that a first Office Action appears in the Patent Application Information Retrieval (PAIR) system. 8) The petition must be accompanied by a request for early publication in compliance with 37 CFR 1.219 and include the publication fee as set forth in 37 CFR 1.18(d).

The requirement for a fee for consideration of the petition to make special for applications pertaining to Green Technologies has been waived.

The instant petition complies with items 1 – 8 above. Accordingly, the above-identified application has been accorded "special" status.

Telephone inquires concerning this decision should be directed to Lee W. Young at 571-272-4549.

The application is being forwarded to the Technology Center Art Unit 2836 for action on the merits commensurate with this decision.

Lee W. Young
Quality Assurance Specialist
Technology Center 2800

Doc Code: PET.GREEN
Document Description: Petition for Green Tech Pilot

PTO/SB/420 (03-11)

PETITION TO MAKE SPECIAL UNDER THE GREEN TECHNOLOGY PILOT PROGRAM

Attorney Docket Number: KW019US	Application Number (if known):	Filing date: 23 April 2011

First Named Inventor: Wilson, Kelce S.

Title: Dynamically Altering Piston Displacement

APPLICANT HEREBY REQUESTS TO PARTICIPATE IN THE GREEN TECHNOLOGY PILOT PROGRAM FOR THE ABOVE-IDENTIFIED APPLICATION. **See Instruction Sheet on page 2.**

This petition must be timely filed electronically using the USPTO electronic filing system, EFS-Web.

1. By filing this petition:

   Applicant is requesting early publication: Applicant hereby requests early publication under 37 CFR 1.219 and the publication fee set forth in 37 CFR 1.18(d) accompanies this request.

2. By filing this petition: applicant is agreeing to make an election without traverse in a telephonic interview and elect an invention that meets the eligibility requirements for the Green Technology Pilot Program, if the Office determines that the claims are not obviously directed to a single invention. See Instruction Sheet.

3. This request is accompanied by statements of special status for the eligibility requirement.

4. The application contains no more than three (3) independent claims and twenty (20) total claims.

5. The application does not contain any multiple dependent claims.

6. Other attachments: _____

Signature /Kelce S Wilson/	Date 23 April 2011
Name (Print/Typed) Kelce S. Wilson	Registration Number 50,289

Note: *Signatures of all the inventors or assignees of record of the entire interest or their representative(s) are required in accordance with 37 CFR 1.33 and 11.18. Please see 37 CFR 1.4(d) for the form of the signature. If necessary, submit multiple forms for more than one signature, see below*.*

☐ *Total of 1 forms are submitted.

If you need assistance in completing the form, call 1-800-PTO-9199 and select option 2.

Instruction Sheet for
Petition to Make Special Under the Green Technology Pilot Program

(Not to be Submitted to the USPTO)

The following is a summary of the requirements (for more information see the notices (i) "Pilot Program for Green Technologies Including Greenhouse Gas Reduction," (ii) "Elimination of Classification Requirement in the Green Technology Pilot Program," and (iii) "Expansion and Extension of the Green Technology Pilot Program," available on the USPTO web site at http://www.uspto.gov/patents/init_events/green_tech.jsp):

(1) The application must be a non-reissue, non-provisional utility application filed under 35 U.S.C. 111(a), or an international application that has entered the national stage in compliance with 35 U.S.C. 371, irrespective of the filing date of the application. Reexamination proceedings are excluded from this pilot program.

(2) The application must contain three or fewer independent claims and twenty or fewer total claims. The application must not contain any multiple dependent claims. For an application that contains more than three independent claims or twenty total claims, or multiple dependent claims, applicant must file a preliminary amendment in compliance with 37 CFR 1.121 to cancel the excess claims and/or the multiple dependent claims at the time the petition to make special is filed.

(3) The claims must be directed to a single invention that materially enhances the quality of the environment, or that materially contributes to: (1) the discovery or development of renewable energy resources; (2) the more efficient utilization and conservation of energy resources; or (3) green house gas emission reduction (see the eligibility requirements of sections II and III of the notice (i) cited above). The petition must include a statement that, if the USPTO determines that the claims are directed to multiple inventions (e.g., in a restriction requirement), applicant will agree to make an election without traverse in a telephonic interview, and elect an invention that meets the eligibility requirements in section II or III of the notice (i) cited above.

(4) The petition to make special must be timely filed electronically using the USPTO electronic filing system, EFS-Web, and selecting the document description of "Petition for Green Tech Pilot" on the EFS-Web screen. Applicant should use form PTO/SB/420, which is available as a Portable Document Format (PDF) fillable form in EFS-Web and on the USPTO Web site.

(5) The petition to make special must be filed at least one day prior to the date that a first Office action (which may be an Office action containing only a restriction requirement) appears in the Patent Application Information Retrieval (PAIR) system. Applicant may check the status of the application using PAIR.

(6) The petition to make special must be accompanied by a request for early publication in compliance with 37 CFR 1.219 and the publication fee set forth in 37 CFR 1.18(d).

Privacy Act Statement

The **Privacy Act of 1974 (P.L. 93-579)** requires that you be given certain information in connection with your submission of the attached form related to a patent application or patent. Accordingly, pursuant to the requirements of the Act, please be advised that: (1) the general authority for the collection of this information is 35 U.S.C. 2(b)(2); (2) furnishing of the information solicited is voluntary; and (3) the principal purpose for which the information is used by the U.S. Patent and Trademark Office is to process and/or examine your submission related to a patent application or patent. If you do not furnish the requested information, the U.S. Patent and Trademark Office may not be able to process and/or examine your submission, which may result in termination of proceedings or abandonment of the application or expiration of the patent.

The information provided by you in this form will be subject to the following routine uses:

1. The information on this form will be treated confidentially to the extent allowed under the Freedom of Information Act (5 U.S.C. 552) and the Privacy Act (5 U.S.C 552a). Records from this system of records may be disclosed to the Department of Justice to determine whether disclosure of these records is required by the Freedom of Information Act.
2. A record from this system of records may be disclosed, as a routine use, in the course of presenting evidence to a court, magistrate, or administrative tribunal, including disclosures to opposing counsel in the course of settlement negotiations.
3. A record in this system of records may be disclosed, as a routine use, to a Member of Congress submitting a request involving an individual, to whom the record pertains, when the individual has requested assistance from the Member with respect to the subject matter of the record.
4. A record in this system of records may be disclosed, as a routine use, to a contractor of the Agency having need for the information in order to perform a contract. Recipients of information shall be required to comply with the requirements of the Privacy Act of 1974, as amended, pursuant to 5 U.S.C. 552a(m).
5. A record related to an International Application filed under the Patent Cooperation Treaty in this system of records may be disclosed, as a routine use, to the International Bureau of the World Intellectual Property Organization, pursuant to the Patent Cooperation Treaty.
6. A record in this system of records may be disclosed, as a routine use, to another federal agency for purposes of National Security review (35 U.S.C. 181) and for review pursuant to the Atomic Energy Act (42 U.S.C. 218(c)).
7. A record from this system of records may be disclosed, as a routine use, to the Administrator, General Services, or his/her designee, during an inspection of records conducted by GSA as part of that agency's responsibility to recommend improvements in records management practices and programs, under authority of 44 U.S.C. 2904 and 2906. Such disclosure shall be made in accordance with the GSA regulations governing inspection of records for this purpose, and any other relevant (*i.e.*, GSA or Commerce) directive. Such disclosure shall not be used to make determinations about individuals.
8. A record from this system of records may be disclosed, as a routine use, to the public after either publication of the application pursuant to 35 U.S.C. 122(b) or issuance of a patent pursuant to 35 U.S.C. 151. Further, a record may be disclosed, subject to the limitations of 37 CFR 1.14, as a routine use, to the public if the record was filed in an application which became abandoned or in which the proceedings were terminated and which application is referenced by either a published application, an application open to public inspection or an issued patent.
9. A record from this system of records may be disclosed, as a routine use, to a Federal, State, or local law enforcement agency, if the USPTO becomes aware of a violation or potential violation of law or regulation.

UNITED STATES PATENT AND TRADEMARK OFFICE

UNITED STATES DEPARTMENT OF COMMERCE
United States Patent and Trademark Office
Address: COMMISSIONER FOR PATENTS
P.O. Box 1450
Alexandria, Virginia 22313-1450
www.uspto.gov

APPLICATION NO.	FILING DATE	FIRST NAMED INVENTOR	ATTORNEY DOCKET NO.	CONFIRMATION NO.
13/092,917	04/23/2011	Kelce S. Wilson	KW019US	7681

70339 7590 05/11/2011

KELCE WILSON
1205 TERRACE MILL DRIVE
MURPHY, TX 75094

EXAMINER	
ART UNIT	PAPER NUMBER
3783	

MAIL DATE	DELIVERY MODE
05/11/2011	PAPER

Please find below and/or attached an Office communication concerning this application or proceeding.

The time period for reply, if any, is set in the attached communication.

UNITED STATES PATENT AND TRADEMARK OFFICE

Commissioner for Patents
United States Patent and Trademark Office
P.O. Box 1450
Alexandria, VA 22313-1450
www.uspto.gov

KELCE WILSON
1205 TERRACE MILL DRIVE
MURPHY TX 75094

In re Application of	:	
WILSON, KELCE S.	:	DECISION ON PETITION
Application No. 13/092,917	:	TO MAKE SPECIAL UNDER
Filed: April 23, 2011	:	THE GREEN TECHNOLOGY
Attorney Docket No. KW019US	:	PILOT PROGRAM

This is a decision on the petition under 37 CFR 1.102, filed April 23, 2011, to make the above-identified application special under the pilot program for applications pertaining to Green Technologies as set forth in 74 Federal Register Notice 64666 (December 8, 2009) and amended by 75 Federal Register Notice 28554 (May 21, 2010) and 75 Federal Register Notice 69049 (November 10, 2010).

The petition is **dismissed**.

If reconsideration of this decision is desired, a petition for reconsideration must be filed within ONE (1) MONTH OR THIRTY (30) DAYS from the mail date of this decision, whichever is longer. No extension of this time limit can be granted under 37 CFR 1.136(a) or (b). The petition for reconsideration should include an exhaustive attempt to provide the lacking item(s) noted below, since, after a decision on the petition for reconsideration, no further reconsideration or review of the matter will be undertaken by the Director.

A grantable petition to make an application special under 37 CFR 1.102 and the pilot program as set forth in 74 FR 64666 must be directed to a nonprovisional application filed under 35 USC 111(a) or be a national stage entry under 35 USC 371, exclusive of any reissue applications.

In order to qualify for special status, the following requirements must be met. 1) The application must have no more than 3 independent claims and no more than 20 total claims. 2) The application must not contain any multiple dependent claims. 3) The petition must state the basis for seeking special status, i.e., the claimed invention either: A) materially enhances the quality of the environment or B) materially contributes to: i) the discovery or development of renewable energy resources, ii) the more efficient utilization and conservation of energy resources, or iii) greenhouse gas emission reduction. 4) If the disclosure is not clear on its face that the claimed invention materially contributes under category (A) or (B), the petition must be accompanied by a statement by the applicant, assignee, or an attorney/agent registered to practice before the

Office explaining how the materiality standard is met. 5) A statement that applicant will agree to make an election without traverse in a telephonic interview if a restriction requirement is made by the examiner. 6) The petition to make special must be filed electronically. 7) The petition must be filed at least one day prior to the date that a first Office Action appears in the Patent Application Information Retrieval (PAIR) system. 8) The petition must be accompanied by a request for early publication in compliance with 37 CFR 1.219 and include the publication fee as set forth in 37 CFR 1.18(d).

The requirement for a fee for consideration of the petition to make special for applications pertaining to Green Technologies has been waived. The petition lacks item # 4.

In regard to item 4, petitioner should note that the instant petition includes a statement identifying the basis for the special status (i.e., whether the instant invention (1) materially enhances the quality of the environment or materially contributes to (2) development of renewable energy resources or energy conservation, or (3) greenhouse gas reduction) as required by sections II and III of the notice. However, as stated in the notice, applicant must also provide a statement pertaining to the materiality standard if the application disclosure is not clear on its face as to the materiality of the basis for the special status of the invention. This petition lacks such a statement and it is not agreed that the application on its face meets that materiality standard. Petitioner states that the claimed invention relates to efficient utilization of energy and energy conservation. This is not convincing. It is not clear how the claimed dynamically altering piston displacement" will provide and enhance the quality of the environment or contribute to development of renewable energy resources or energy conservation or greenhouse gas reduction. Claim 1 has nothing to do with green technologies. The claimed piston displacement reads on a lifting piston for construction. There is no relationship between the statement and the claimed subject matter.

Any reconsideration of this decision should be submitted through the USPTO electronic filing system, EFS-Web, and selecting the document description of "Petition for Green Tech Pilot" on the EFS-Web screen.

Telephone inquiries concerning this decision should be directed to Henry C. Yuen at 571-272-4856.

The application will be forwarded to the Technology Center Art Unit 3745 for action in its regular turn.

/Henry C. Yuen/

Henry C. Yuen
Quality Assurance Specialist
Technology Center 3700

Doc Code: PET.GREEN
Document Description: Petition for Green Tech Pilot

PTO/SB/420 (03-11)

PETITION TO MAKE SPECIAL UNDER THE GREEN TECHNOLOGY PILOT PROGRAM

Attorney Docket Number: KW019US	Application Number (if known): 13/092,917	Filing date: 23 April 2011

First Named Inventor: Wilson, Kelce S.

Title: Dynamically Altering Piston Displacement

APPLICANT HEREBY REQUESTS TO PARTICIPATE IN THE GREEN TECHNOLOGY PILOT PROGRAM FOR THE ABOVE-IDENTIFIED APPLICATION. See Instruction Sheet on page 2.

This petition must be timely filed electronically using the USPTO electronic filing system, EFS-Web.

1. By filing this petition:

   Applicant is requesting early publication: Applicant hereby requests early publication under 37 CFR 1.219 and the publication fee set forth in 37 CFR 1.18(d) accompanies this request.

2. By filing this petition: applicant is agreeing to make an election without traverse in a telephonic interview and elect an invention that meets the eligibility requirements for the Green Technology Pilot Program, if the Office determines that the claims are not obviously directed to a single invention. See Instruction Sheet.

3. This request is accompanied by statements of special status for the eligibility requirement.

4. The application contains no more than three (3) independent claims and twenty (20) total claims.

5. The application does not contain any multiple dependent claims.

6. Other attachments: Petition for Reconsideration and Letter of Special Status

Signature /Kelce S Wilson/	Date 5 June 2011
Name (Print/Typed) Kelce S. Wilson	Registration Number 50,289

Note: *Signatures of all the inventors or assignees of record of the entire interest or their representative(s) are required in accordance with 37 CFR 1.33 and 11.18. Please see 37 CFR 1.4(d) for the form of the signature. If necessary, submit multiple forms for more than one signature, see below*.*

☐ *Total of 1 forms are submitted.

If you need assistance in completing the form, call 1-800-PTO-9199 and select option 2.

Instruction Sheet for
Petition to Make Special Under the Green Technology Pilot Program

(Not to be Submitted to the USPTO)

The following is a summary of the requirements (for more information see the notices (i) "Pilot Program for Green Technologies Including Greenhouse Gas Reduction," (ii) "Elimination of Classification Requirement in the Green Technology Pilot Program," and (iii) "Expansion and Extension of the Green Technology Pilot Program," available on the USPTO web site at http://www.uspto.gov/patents/init_events/green_tech.jsp):

(1) The application must be a non-reissue, non-provisional utility application filed under 35 U.S.C. 111(a), or an international application that has entered the national stage in compliance with 35 U.S.C. 371, irrespective of the filing date of the application. Reexamination proceedings are excluded from this pilot program.

(2) The application must contain three or fewer independent claims and twenty or fewer total claims. The application must not contain any multiple dependent claims. For an application that contains more than three independent claims or twenty total claims, or multiple dependent claims, applicant must file a preliminary amendment in compliance with 37 CFR 1.121 to cancel the excess claims and/or the multiple dependent claims at the time the petition to make special is filed.

(3) The claims must be directed to a single invention that materially enhances the quality of the environment, or that materially contributes to: (1) the discovery or development of renewable energy resources; (2) the more efficient utilization and conservation of energy resources; or (3) green house gas emission reduction (see the eligibility requirements of sections II and III of the notice (i) cited above). The petition must include a statement that, if the USPTO determines that the claims are directed to multiple inventions (e.g., in a restriction requirement), applicant will agree to make an election without traverse in a telephonic interview, and elect an invention that meets the eligibility requirements in section II or III of the notice (i) cited above.

(4) The petition to make special must be timely filed electronically using the USPTO electronic filing system, EFS-Web, and selecting the document description of "Petition for Green Tech Pilot" on the EFS-Web screen. Applicant should use form PTO/SB/420, which is available as a Portable Document Format (PDF) fillable form in EFS-Web and on the USPTO Web site.

(5) The petition to make special must be filed at least one day prior to the date that a first Office action (which may be an Office action containing only a restriction requirement) appears in the Patent Application Information Retrieval (PAIR) system. Applicant may check the status of the application using PAIR.

(6) The petition to make special must be accompanied by a request for early publication in compliance with 37 CFR 1.219 and the publication fee set forth in 37 CFR 1.18(d).

Privacy Act Statement

The **Privacy Act of 1974 (P.L. 93-579)** requires that you be given certain information in connection with your submission of the attached form related to a patent application or patent. Accordingly, pursuant to the requirements of the Act, please be advised that: (1) the general authority for the collection of this information is 35 U.S.C. 2(b)(2); (2) furnishing of the information solicited is voluntary; and (3) the principal purpose for which the information is used by the U.S. Patent and Trademark Office is to process and/or examine your submission related to a patent application or patent. If you do not furnish the requested information, the U.S. Patent and Trademark Office may not be able to process and/or examine your submission, which may result in termination of proceedings or abandonment of the application or expiration of the patent.

The information provided by you in this form will be subject to the following routine uses:

1. The information on this form will be treated confidentially to the extent allowed under the Freedom of Information Act (5 U.S.C. 552) and the Privacy Act (5 U.S.C 552a). Records from this system of records may be disclosed to the Department of Justice to determine whether disclosure of these records is required by the Freedom of Information Act.
2. A record from this system of records may be disclosed, as a routine use, in the course of presenting evidence to a court, magistrate, or administrative tribunal, including disclosures to opposing counsel in the course of settlement negotiations.
3. A record in this system of records may be disclosed, as a routine use, to a Member of Congress submitting a request involving an individual, to whom the record pertains, when the individual has requested assistance from the Member with respect to the subject matter of the record.
4. A record in this system of records may be disclosed, as a routine use, to a contractor of the Agency having need for the information in order to perform a contract. Recipients of information shall be required to comply with the requirements of the Privacy Act of 1974, as amended, pursuant to 5 U.S.C. 552a(m).
5. A record related to an International Application filed under the Patent Cooperation Treaty in this system of records may be disclosed, as a routine use, to the International Bureau of the World Intellectual Property Organization, pursuant to the Patent Cooperation Treaty.
6. A record in this system of records may be disclosed, as a routine use, to another federal agency for purposes of National Security review (35 U.S.C. 181) and for review pursuant to the Atomic Energy Act (42 U.S.C. 218(c)).
7. A record from this system of records may be disclosed, as a routine use, to the Administrator, General Services, or his/her designee, during an inspection of records conducted by GSA as part of that agency's responsibility to recommend improvements in records management practices and programs, under authority of 44 U.S.C. 2904 and 2906. Such disclosure shall be made in accordance with the GSA regulations governing inspection of records for this purpose, and any other relevant (*i.e.*, GSA or Commerce) directive. Such disclosure shall not be used to make determinations about individuals.
8. A record from this system of records may be disclosed, as a routine use, to the public after either publication of the application pursuant to 35 U.S.C. 122(b) or issuance of a patent pursuant to 35 U.S.C. 151. Further, a record may be disclosed, subject to the limitations of 37 CFR 1.14, as a routine use, to the public if the record was filed in an application which became abandoned or in which the proceedings were terminated and which application is referenced by either a published application, an application open to public inspection or an issued patent.
9. A record from this system of records may be disclosed, as a routine use, to a Federal, State, or local law enforcement agency, if the USPTO becomes aware of a violation or potential violation of law or regulation.

IN THE UNITES STATES PATENT AND TRADEMARK OFFICE

Inventors: Kelce S. Wilson et al.
Title: Dynamically Altering Piston Displacement
Application: Not yet assigned
Docket No.: KW019US

Mail Stop: Petitions
Commissioner for Patents
P.O. Box 1450
Alexandria, VA 22313-1450

PETITION FOR RECONSIDERATION OF GREEN TECHNOLOGY PILOT PROGRAM, AND STATEMENT OF SPECIAL STATUS

Sir:

Applicant requests reconsideration of denial of the initial petition. The Office interpreted the scope of the claim to not be limited to internal combustion engines. The claim is amended to limit the scope to internal combustion engines and exclude hydraulic lifting pistons.

The Application materially contributes to the more efficient utilization and conservation of energy resources by reducing gasoline demand. It is well known that smaller displacement engines tend to use less fuel than larger displacement engines. This is supported by marketing materials from Chrysler Corporation, touting the fuel saving benefit of their multi-displacement 5.7 Hemi V8 engine (MDS). General Motors sells an Active Fuel Management (AFM) system, which was pioneered in the early 1980's, and Honda also uses a similar system (VCM). All are advertised as fuel-saving systems. The claimed invention saves fuel with the same concept (reducing engine displacement), but accomplishes the reduction in a novel, patentable manner.

Respectfully submitted,

By: /Kelce S Wilson/
Kelce S. Wilson
Reg. No. 50,289

Date: 5 June 2011

Correspondence to:

Address associated with Customer Number 70,339, which is also provided below:
Kelce Wilson
1205 Terrace Mill Drive
Murphy, Texas 75094

UNITED STATES PATENT AND TRADEMARK OFFICE

UNITED STATES DEPARTMENT OF COMMERCE
United States Patent and Trademark Office
Address: COMMISSIONER FOR PATENTS
P.O. Box 1450
Alexandria, Virginia 22313-1450
www.uspto.gov

APPLICATION NO.	FILING DATE	FIRST NAMED INVENTOR	ATTORNEY DOCKET NO.	CONFIRMATION NO.
13/092,917	04/23/2011	Kelce S. Wilson	KW019US	7681

70339 7590 08/03/2011
KELCE WILSON
1205 TERRACE MILL DRIVE
MURPHY, TX 75094

EXAMINER	
ART UNIT	PAPER NUMBER
3783	

MAIL DATE	DELIVERY MODE
08/03/2011	PAPER

Please find below and/or attached an Office communication concerning this application or proceeding.

The time period for reply, if any, is set in the attached communication.

UNITED STATES PATENT AND TRADEMARK OFFICE

Commissioner for Patents
United States Patent and Trademark Office
P.O. Box 1450
Alexandria, VA 22313-1450
www.uspto.gov

KELCE WILSON
1205 TERRACE MILL DRIVE
MURPHY TX 75094

AUG 0 3 2011

In re Application of :
Wilson :
Application No. 13/092,917 :
Filed: 4/23/2011 :
Attorney Docket No. **KW019US** :

DECISION ON PETITION
TO MAKE SPECIAL UNDER
THE GREEN TECHNOLOGY
PILOT PROGRAM

This is a decision on the petition under 37 CFR 1.102, filed 6/5/2011, to make the above-identified application special under the pilot program for applications pertaining to Green Technologies as set forth in 74 Federal Register Notice 64666 (December 8, 2009) and amended by 75 Federal Register Notice 28554 (May 21, 2010) and 75 Federal Register Notice 69049 (November 10, 2010).

The petition is **GRANTED**.

A grantable petition to make an application special under 37 CFR 1.102 and the pilot program as set forth in 74 FR 64666 must be directed to a nonprovisional application filed under 35 USC 111(a) or be a national stage entry under 35 USC 371, exclusive of any reissue applications.

In order to qualify for special status, the following requirements must be met. 1) The application must have no more than 3 independent claims and no more than 20 total claims. 2) The application must not contain any multiple dependent claims. 3) The petition must state the basis for seeking special status, i.e., the claimed invention either: A) materially enhances the quality of the environment or B) materially contributes to: i) the discovery or development of renewable energy resources, ii) the more efficient utilization and conservation of energy resources, or iii) greenhouse gas emission reduction. 4) If the disclosure is not clear on its face that the claimed invention materially contributes under category (A) or (B), the petition must be accompanied by a statement by the applicant, assignee, or an attorney/agent registered to practice before the Office explaining how the materiality standard is met. 5) A statement that applicant will agree to make an election without traverse in a telephonic interview if a restriction requirement is made by the examiner. 6) The petition to make special must be filed electronically. 7) The petition must be filed at least one day prior to the date that a first Office Action appears in the Patent Application Information Retrieval (PAIR) system. 8) The petition must be accompanied by a request for early publication in compliance with 37 CFR 1.219 and include the publication fee as set forth in 37 CFR 1.18(d).

The requirement for a fee for consideration of the petition to make special for applications pertaining to Green Technologies has been waived.

The instant petition complies with items 1 – 8 above. Accordingly, the above-identified application has been accorded "special" status.

Telephone inquires concerning this decision should be directed to Tom Dunn at 571-272-1171.

The application is being forwarded to the Technology Center Art Unit 3783 for action on the merits commensurate with this decision.

/Tom Dunn/

Tom Dunn
Quality Assurance Specialist
Technology Center 1700

UNITED STATES PATENT AND TRADEMARK OFFICE

Commissioner for Patents
United States Patent and Trademark Office
P.O. Box 1450
Alexandria, VA 22313-1450
www.uspto.gov

October 20, 2011

Diamond Innovations
6325 Huntley Road
Worthington OH 43229

Re Application of
PAKALAPATI, RAJEEV TIRUMALA, Et Al. : **DECISION ON PETITION**
Application: **13/093026** : **ACCEPTANCE OF COLOR**
Filed: **04/25/2011** : **DRAWINGS**
Attorney Docket No: **12665USDIV**

This is a decision on the Renewal of Petition to Accept Color Drawings under 37 C.F.R 1.84 (a) (2), received in the United States Patent and Trademark Office (USPTO) April 25, 2011.

The petition is **GRANTED.**
A grantable petition under 37 C.F.R. 1.84(a) (2) must be accompanied by the following.

1. The fee set forth under 37 C.F.R. 1.17(h),
2. Three (3) sets of the color drawings in question, or (1) set if filed via EFS, and
3. The specification containing the following language as the first paragraph in that portion of the specification relating to the brief description of the drawings.

   "The file of this patent contains at least one drawing executed in color. Copies of this patent with color drawing(s) will be provided by the Patent and Trademark Office upon request and payment of the necessary fee."

The petition was accompanied by all of the required fees and drawings. The specification contains the appropriate language. Therefore, the petition is GRANTED.

Telephone inquires relating to this decision may be directed to the undersigned in the Office of Data Management at 571-272-4200.

/Bernadette Queen/
Quality Control Specialist
Office of Data Management
Publications Branch

Doc Code: PET.AUTO Document Description: Petition automatically granted by EFS-Web	PTO/SB/140 U.S. Patent and Trademark Office Department of Commerce

Electronic Petition Request	**PETITION TO WITHDRAW AN APPLICATION FROM ISSUE AFTER PAYMENT OF THE ISSUE FEE UNDER 37 CFR 1.313(c)**
Application Number	13093029
Filing Date	25-Apr-2011
First Named Inventor	Ahmadreza (Reza) Rofougaran
Art Unit	2618
Examiner Name	TUAN NGUYEN
Attorney Docket Number	BP5937D1
Title	IC ANTENNA STRUCTURES AND APPLICATIONS THEREOF

An application may be withdrawn from issue for further action upon petition by the applicant. To request that the Office withdraw an application from issue, applicant must file a petition under this section including the fee set forth in § 1.17(h) and a showing of good and sufficient reasons why withdrawal of the application from issue is necessary.

APPLICANT HEREBY PETITIONS TO WITHDRAW THIS APPLICATION FROM ISSUE UNDER 37 CFR 1.313(c).

A grantable petition requires the following items:
(1) Petition fee; and
(2) One of the following reasons:
(a) Unpatentability of one or more claims, which must be accompanied by an unequivocal statement that one or more claims are unpatentable, an amendment to such claim or claims, and an explanation as to how the amendment causes such claim or claims to be patentable;
(b) Consideration of a request for continued examination in compliance with § 1.114 (for a utility or plant application only); or
(c) Express abandonment of the application. Such express abandonment may be in favor of a continuing application, but not a CPA under 37 CFR 1.53(d).

Petition Fee

☐ Applicant claims SMALL ENTITY status. See 37 CFR 1.27.

☐ Applicant is no longer claiming SMALL ENTITY status. See 37 CFR 1.27(g)(2).

☐ Applicant(s) status remains as SMALL ENTITY.

☒ Applicant(s) status remains as other than SMALL ENTITY

Reason for withdrawal from issue

◯ One or more claims are unpatentable ◉ Consideration of a request for continued examination (RCE) (List of Required Documents and Fees) ◯ Applicant hereby expressly abandons the instant application (any attorney/agent signing for this reason must have power of attorney pursuant to 37 CFR 1.32(b)).
RCE request,submission, and fee. ☐ I certify, in accordance with 37 CFR 1.4(d)(4) that : The RCE request ,submission, and fee have already been filed in the above-identified application on ☒ Are attached.
THIS PORTION MUST BE COMPLETED BY THE SIGNATORY OR SIGNATORIES I certify, in accordance with 37 CFR 1.4(d)(4) that I am: ◉ An attorney or agent registered to practice before the Patent and Trademark Office who has been given power of attorney in this application. ◯ An attorney or agent registered to practice before the Patent and Trademark Office, acting in a representative capacity. ◯ A sole inventor ◯ A joint inventor; I certify that I am authorized to sign this submission on behalf of all of the inventors ◯ A joint inventor; all of whom are signing this e-petition ◯ The assignee of record of the entire interest that has properly made itself of record pursuant to 37 CFR 3.71

Signature	/William W. Kidd/
Name	William W. Kidd
Registration Number	31772

UNITED STATES PATENT AND TRADEMARK OFFICE

Commissioner for Patents
United States Patent and Trademark Office
P.O. Box 1450
Alexandria, VA 22313-1450
www.uspto.gov

Decision Date : January 20, 2012

In re Application of :

Ahmadreza (Reza) Rofougaran

DECISION ON PETITION

UNDER CFR 1.313(c)(2)

Application No : 13093029

Filed : 25-Apr-2011

Attorney Docket No : BP5937D1

This is an electronic decision on the petition under 37 CFR 1.313(c)(2), filed January 20, 2012 , to withdraw the above-identified application from issue after payment of the issue fee.

The petition is **GRANTED.**

The above-identified application is withdrawn from issue for consideration of a submission under 37 CFR 1.114 (request for continued examination). See 37 CFR 1.313(c)(2).

Petitioner is advised that the issue fee paid in this application cannot be refunded. If, however, this application is again allowed, petitioner may request that it be applied towards the issue fee required by the new Notice of Allowance.

Telephone inquiries concerning this decision should be directed to the Patent Electronic Business Center (EBC) at 866-217-9197.

This application file is being referred to Technology Center AU 2618 for processing of the request for continuing examination under 37 CFR 1.114 .

Office of Petitions

UNITED STATES PATENT AND TRADEMARK OFFICE

UNITED STATES DEPARTMENT OF COMMERCE
United States Patent and Trademark Office
Address: COMMISSIONER FOR PATENTS
P.O. Box 1450
Alexandria, Virginia 22313-1450
www.uspto.gov

APPLICATION NO.	FILING DATE	FIRST NAMED INVENTOR	ATTORNEY DOCKET NO.	CONFIRMATION NO.
13/093,252	04/25/2011	Surinder Pal Singh	2251/72338-AAA-PCT-US/JPW	8372

23432 7590 08/09/2011

COOPER & DUNHAM, LLP
30 Rockefeller Plaza
20th Floor
NEW YORK, NY 10112

EXAMINER	
COLLINS, CYNTHIA E	
ART UNIT	**PAPER NUMBER**
1638	
MAIL DATE	**DELIVERY MODE**
08/09/2011	PAPER

Please find below and/or attached an Office communication concerning this application or proceeding.

The time period for reply, if any, is set in the attached communication.

UNITED STATES PATENT AND TRADEMARK OFFICE

Commissioner for Patents
United States Patent and Trademark Office
P.O. Box 1450
Alexandria, VA 22313-1450
www.uspto.gov

AUG 0 9 2011

COOPER & DUNHAM, LLP
30 Rockefeller Plaza
20th Floor
NEW YORK NY 10112

In re Application of:
Singh et al.

Serial No.: 13/093,252

Filed: : April 25, 2011

Docket: **2251/72338-AAA-PCT-US/JPW**

Title: **SYNTHESIS OF LONG-CHAIN POLYUNSATURATED FATTY ACIDS BY RECOMBINANT CELLS**

DECISION ON PETITION TO MAKE SPECIAL FOR NEW APPLICATION UNDER 37 C.F.R. § 1.102 & M.P.E.P. § 708.02

This is a decision on the petition filed April 25, 2011, to make the above-identified application special for accelerated examination procedure under 37 C.F.R. § 1.102(d).

The petition to make the application special is GRANTED.

The application is eligible for accelerated examination and the petition complies with the conditions for granting the application special status pursuant to the "Change to Practice for Petitions in Patent Applications to Make Special and for Accelerated Examination" published June 26, 2006, in the Federal Register. (71 Fed. Reg. 36323).

The prosecution of the instant application will be conducted expeditiously according to the following guidelines.

1. The application will be docketed to an examiner and taken up for action within two weeks of the date of this decision.

2. Restriction Practice:
   If the examiner determines that the claims are not directed to a single invention, a telephone request to elect one single invention will be made pursuant to MPEP 812.01. As a prerequisite to the grant of this petition, the applicant has agreed to make an oral

election, by telephone, without traverse. If the applicant refuses to make an election without traverse, or the examiner cannot reach the applicant after a reasonable effort, the examiner will treat the first claimed invention (invention defined by claim 1) as having being constructively elected without traverse for examination.

3. Office action:
   If it is determined that, after appropriate consultation, there is a potential rejection or any other issue to be addressed, the examiner will telephone the applicant and arrange an interview to discuss and resolve the issue. An Office action, other than a Notice of Allowance and Fee(s) Due (Notice of Allowance), will not be issued unless either: 1) an interview was conducted but did not result in agreed to action that places the application in condition for allowance, or, 2) a determination is made that an interview would be unlikely to result in the application being placed in condition for allowance, and 3) an internal conference has been held to review any rejection of any claim.

4. Time for Reply:
   An Office action other than a Notice of Allowance or a final Office action will set a shortened statutory period of one month or thirty days, whichever is longer, for reply with no extension of time available under 37 CFR 1.136(a). Failure to timely file a reply within this non-extendible period for reply will result in the abandonment of the application.

5. Reply by Applicant:
   A timely reply to an Office action other than the Notice of Allowance must be submitted electronically via EFS or EFS-web and limited to addressing the rejections, objections and requirement made. Any amendment that attempts to: 1) add claims which would result in more than three pending independent claims or more than twenty pending total claims; 2) present claims not encompassed by the pre-examination search or an updated accelerated examination support document; or 3) present claims that are directed a non-elected invention or an invention other than that previously claimed and examined in the application, will be treated as not fully responsive and will not be entered.

   For any amendment to the claims (including any new claim) that is not encompassed by the accelerated examination support document, applicant must provide an updated accelerated examination support document that encompasses the amended or new claims at the time of filing of the amendment.

   To proceed expeditiously with the examination, it is recommended that a reply with amendments made to any claim or with any new claim being added be accompanied by an updated accelerated examination support document or a statement explaining how the amended or new claim is supported by the original accelerated examination support document.
6. Information Disclosure Statement (IDS):
7. Any IDS filed during prosecution must be submitted electronically via EFS or EFS-web, accompanied by an updated accelerated examination support document, and be in compliance with 37 CFR 1.97 and 1.98.

8. Post-Allowance Processing:
   To expedite processing of the allowed application into a patent, the applicant must: 1) pay the required fees within one month of the date of the Notice of Allowance, and 2) not file any post allowance papers not required by the Office. In no event may the issue fee be paid and accepted later than three months from the date of the Notice of Allowance.

9. After-Final and Appeal Procedures:
   To expedite prosecution, after receiving the final Office action, applicant must: 1) promptly file a notice of appeal, an appeal brief and appeal fees; and 2) not request a pre-appeal brief conference.

   Any amendment, affidavit or other evidence filed after final Office action must comply with applicable rules and the requirements outlined in numbered paragraphs 5 and 6 above.

   On appeal, the application will proceed according to normal appeal procedures. After appeal, the application will again be treated special.

10. Proceedings Outside the Normal Examination Process:
    If the application becomes involved in a proceeding that is outside the normal examination process (e.g., a secrecy order, national security review, interference proceeding, petitions under 37 CFR 1.181, 182 or 183), the application will be treated special before and after such proceeding.

11. Final Disposition:
    The twelve month goal of this accelerated examination procedure ends with a final disposition. The mailing of a final Office action, a Notice of Allowance, the filing of a Notice of Appeal, or the filing of a Request for Continued Examination (RCE) is the final disposition.

If, during prosecution, a paper is not filed electronically using EFS-web, a reply is filed but is not fully responsive, the application is involved in an appeal, or a proceeding outside normal examination process, the application will still be examined expeditiously, however, the final disposition may occur more than twelve months from the filing of the application.

Any inquiry regarding this decision should be directed to Marianne C. Seidel, Quality Assurance Specialist, at (571) 272-0584.

/MC Seidel/
Marianne C. Seidel, Quality Assurance Specialist
Technology Center 1600

UNITED STATES PATENT AND TRADEMARK OFFICE

UNITED STATES DEPARTMENT OF COMMERCE
United States Patent and Trademark Office
Address: COMMISSIONER FOR PATENTS
P.O. Box 1450
Alexandria, Virginia 22313-1450
www.uspto.gov

APPLICATION NO.	FILING DATE	FIRST NAMED INVENTOR	ATTORNEY DOCKET NO.	CONFIRMATION NO.
13/093,252	04/25/2011	Surinder Pal Singh	2251/72338-AAA-PCT-US/JPW	8372

23432 7590 08/09/2011

COOPER & DUNHAM, LLP
30 Rockefeller Plaza
20th Floor
NEW YORK, NY 10112

EXAMINER
COLLINS, CYNTHIA E

ART UNIT	PAPER NUMBER
1638	

MAIL DATE	DELIVERY MODE
08/09/2011	PAPER

Please find below and/or attached an Office communication concerning this application or proceeding.

The time period for reply, if any, is set in the attached communication.

UNITED STATES PATENT AND TRADEMARK OFFICE

Commissioner for Patents
United States Patent and Trademark Office
P.O. Box 1450
Alexandria, VA 22313-1450
www.uspto.gov

AUG 0 9 2011

COOPER & DUNHAM, LLP
30 Rockefeller Plaza
20th Floor
NEW YORK NY 10112

In re Application of:
Singh et al.

Serial No.: 13/093,252

Filed: : April 25, 2011

Docket: **2251/72338-AAA-PCT-US/JPW**

Title: **SYNTHESIS OF LONG-CHAIN POLYUNSATURATED FATTY ACIDS BY RECOMBINANT CELLS**

DECISION ON PETITION TO MAKE SPECIAL FOR NEW APPLICATION UNDER 37 C.F.R. § 1.102 & M.P.E.P. § 708.02

This is a decision on the petition filed April 25, 2011, to make the above-identified application special for accelerated examination procedure under 37 C.F.R. § 1.102(d).

The petition to make the application special is GRANTED.

The application is eligible for accelerated examination and the petition complies with the conditions for granting the application special status pursuant to the "Change to Practice for Petitions in Patent Applications to Make Special and for Accelerated Examination" published June 26, 2006, in the Federal Register. (71 Fed. Reg. 36323).

The prosecution of the instant application will be conducted expeditiously according to the following guidelines.

1. The application will be docketed to an examiner and taken up for action within two weeks of the date of this decision.

2. Restriction Practice:
   If the examiner determines that the claims are not directed to a single invention, a telephone request to elect one single invention will be made pursuant to MPEP 812.01. As a prerequisite to the grant of this petition, the applicant has agreed to make an oral

election, by telephone, without traverse. If the applicant refuses to make an election without traverse, or the examiner cannot reach the applicant after a reasonable effort, the examiner will treat the first claimed invention (invention defined by claim 1) as having being constructively elected without traverse for examination.

3. Office action:
   If it is determined that, after appropriate consultation, there is a potential rejection or any other issue to be addressed, the examiner will telephone the applicant and arrange an interview to discuss and resolve the issue. An Office action, other than a Notice of Allowance and Fee(s) Due (Notice of Allowance), will not be issued unless either: 1) an interview was conducted but did not result in agreed to action that places the application in condition for allowance, or, 2) a determination is made that an interview would be unlikely to result in the application being placed in condition for allowance, and 3) an internal conference has been held to review any rejection of any claim.

4. Time for Reply:
   An Office action other than a Notice of Allowance or a final Office action will set a shortened statutory period of one month or thirty days, whichever is longer, for reply with no extension of time available under 37 CFR 1.136(a). Failure to timely file a reply within this non-extendible period for reply will result in the abandonment of the application.

5. Reply by Applicant:
   A timely reply to an Office action other than the Notice of Allowance must be submitted electronically via EFS or EFS-web and limited to addressing the rejections, objections and requirement made. Any amendment that attempts to: 1) add claims which would result in more than three pending independent claims or more than twenty pending total claims; 2) present claims not encompassed by the pre-examination search or an updated accelerated examination support document; or 3) present claims that are directed a non-elected invention or an invention other than that previously claimed and examined in the application, will be treated as not fully responsive and will not be entered.

   For any amendment to the claims (including any new claim) that is not encompassed by the accelerated examination support document, applicant must provide an updated accelerated examination support document that encompasses the amended or new claims at the time of filing of the amendment.

   To proceed expeditiously with the examination, it is recommended that a reply with amendments made to any claim or with any new claim being added be accompanied by an updated accelerated examination support document or a statement explaining how the amended or new claim is supported by the original accelerated examination support document.
6. Information Disclosure Statement (IDS):
7. Any IDS filed during prosecution must be submitted electronically via EFS or EFS-web, accompanied by an updated accelerated examination support document, and be in compliance with 37 CFR 1.97 and 1.98.

8. Post-Allowance Processing:
   To expedite processing of the allowed application into a patent, the applicant must: 1) pay the required fees within one month of the date of the Notice of Allowance, and 2) not file any post allowance papers not required by the Office. In no event may the issue fee be paid and accepted later than three months from the date of the Notice of Allowance.

9. After-Final and Appeal Procedures:
   To expedite prosecution, after receiving the final Office action, applicant must: 1) promptly file a notice of appeal, an appeal brief and appeal fees; and 2) not request a pre-appeal brief conference.

   Any amendment, affidavit or other evidence filed after final Office action must comply with applicable rules and the requirements outlined in numbered paragraphs 5 and 6 above.

   On appeal, the application will proceed according to normal appeal procedures. After appeal, the application will again be treated special.

10. Proceedings Outside the Normal Examination Process:
    If the application becomes involved in a proceeding that is outside the normal examination process (e.g., a secrecy order, national security review, interference proceeding, petitions under 37 CFR 1.181, 182 or 183), the application will be treated special before and after such proceeding.

11. Final Disposition:
    The twelve month goal of this accelerated examination procedure ends with a final disposition. The mailing of a final Office action, a Notice of Allowance, the filing of a Notice of Appeal, or the filing of a Request for Continued Examination (RCE) is the final disposition.

If, during prosecution, a paper is not filed electronically using EFS-web, a reply is filed but is not fully responsive, the application is involved in an appeal, or a proceeding outside normal examination process, the application will still be examined expeditiously, however, the final disposition may occur more than twelve months from the filing of the application.

Any inquiry regarding this decision should be directed to Marianne C. Seidel, Quality Assurance Specialist, at (571) 272-0584.

/MC Seidel/
Marianne C. Seidel, Quality Assurance Specialist
Technology Center 1600

UNITED STATES PATENT AND TRADEMARK OFFICE

Commissioner for Patents
United States Patent and Trademark Office
P.O. Box 1450
Alexandria, VA 22313-1450
www.uspto.gov

STERNE, KESSLER, GOLDSTEIN & FOX, P.L.L.C.
1100 NEW YORK AVENUE, N.W.
WASHINGTON, DC 20005

MAILED

JUN 17 2011

OFFICE OF PETITIONS

In re Application of :
Jon H. WERNER, et *al.* :
Application No. 13/093,277 : DECISION ON PETITION TO
Filed: April 25, 2011 : WITHDRAW FROM RECORD
Attorney Docket No. **2483.098000G** :

This is a decision on the Request to Withdraw as attorney or agent of record under 37 C.F.R. § 1.36(b), filed June 15, 2011.

The request is **APPROVED**.

A grantable request to withdraw as attorney/agent of record must be signed by every attorney/agent seeking to withdraw or contain a clear indication that one attorney is signing on behalf of another/others.

The request was signed by Andrew J. Dillon on behalf of all attorneys of record. Andrew J. Dillon has been withdrawn as attorney or agent of record; all other attorneys remain of record.

The correspondence address of record remains unchanged.

Telephone inquiries concerning this decision should be directed to the undersigned at (571) 272-7253.

/Monica A. Graves/
Petitions Examiner, Office of Petitions

UNITED STATES PATENT AND TRADEMARK OFFICE

Commissioner for Patents
United States Patent and Trademark Office
P.O. Box 1450
Alexandria, VA 22313-1450
www.uspto.gov

E I DU PONT DE NEMOURS AND COMPANY
LEGAL PATENT RECORDS CENTER
BARLEY MILL PLAZA 25/1125
4417 LANCASTER PIKE
WILMINGTON DE 19805

MAILED
JUN 30 2011
OFFICE OF PETITIONS

In re Application of :
Sheng Peng et al. :
Application No. 13/093,295 : RESPONSE TO PETITION
Filed: April 25, 2011 :
Attorney Docket No. CH3117USDIV1 :

This is a response to the petition under 37 CFR 1.59(b), filed April 26, 2011, to expunge information from the above identified application.

The petition is **granted**.

On April 25, 2011, a Utility Patent Application Transmittal form (form) was filed in the above-identified application. The form was intended for an application having an Attorney Docket No. CH3160USDIV1, now identified as US Application No. 13/093,446, but was filed with US Application No. 13/093,295. Petitioner now requests that this form be removed from the file of the US Application No. 13/093,295.

Upon a showing satisfactory to the Director, information, other than that forming part of the original disclosure, may be expunged from an application. Since the Office can determine the correct application file for which the erroneously filed papers were intended from the other identifying information on the papers, the papers will be removed as requested.

It is agreed that it would be appropriate in this instance to close the unintentionally filed form filed April 25, 2011 in US Application No. 13/093,295, and also remove such from the listing of publicly available documents for this Image File Wrapper (IFW).

Telephone inquiries concerning this communication should be directed to the undersigned at (571) 272-6692.

Christopher Bottorff
Petitions Examiner
Office of Petitions

UNITED STATES PATENT AND TRADEMARK OFFICE

Commissioner for Patents
United States Patent and Trademark Office
P.O. Box 1450
Alexandria, VA 22313-1450
www.uspto.gov

BUHLER ASSOCIATES
BUHLER, KIRK A.
1101 CALIFORNIA AVE.
SUITE 208
CORONA CA 92881

MAILED
SEP 29 2011
OFFICE OF PETITIONS

In re Application of
Ruben Sandoval
Application No. 13/093,358
Filed: April 25, 2011
Attorney Docket No. RS01-09U

DECISION ON PETITION
TO WITHDRAW
FROM RECORD

This is a decision on the Request to Withdraw as attorney or agent of record under 37 C.F.R. § 1.36(b), filed September 12, 2011.

The request is **APPROVED**.

A grantable request to withdraw as attorney/agent of record must be signed by every attorney/agent seeking to withdraw or contain a clear indication that one attorney is signing on behalf of another/others

The request was signed by Kirk A. Buhler on behalf of all attorneys of record who are associated with customer No. 37038. All attorneys/agents associated with the Customer Number 37038 have been withdrawn. Applicant is reminded that there is no attorney of record at this time.

The correspondence address of record has been changed and the new correspondence address is the address indicated below.

There are no pending Office actions at the present time.

Telephone inquiries concerning this decision should be directed to undersigned at 571-272-1642. All other inquiries concerning the examination or status of this application should be directed to the Technology Center.

/AMW/
April M. Wise
Petitions Examiner
Office of Petitions

cc: RUBEN SANDOVOL
PO BOX 135
REDLANDS, CA 92373

UNITED STATES PATENT AND TRADEMARK OFFICE

UNITED STATES DEPARTMENT OF COMMERCE
United States Patent and Trademark Office
Address: COMMISSIONER FOR PATENTS
P.O. Box 1450
Alexandria, Virginia 22313-1450
www.uspto.gov

APPLICATION NUMBER	FILING OR 371(C) DATE	FIRST NAMED APPLICANT	ATTY. DOCKET NO./TITLE
13/093,358	04/25/2011	RUBEN SANDOVAL	RS01-09U

CONFIRMATION NO. 8562

POWER OF ATTORNEY NOTICE

37038
BUHLER ASSOCIATES
BUHLER, KIRK A.
1101 CALIFORNIA AVE.
SUITE 208
CORONA, CA 92881

OC000000050049129

Date Mailed: 09/27/2011

NOTICE REGARDING CHANGE OF POWER OF ATTORNEY

This is in response to the Power of Attorney filed 09/12/2011.

- The withdrawal as attorney in this application has been accepted. Future correspondence will be mailed to the new address of record. 37 CFR 1.33.

/amwise/

Office of Data Management, Application Assistance Unit (571) 272-4000, or (571) 272-4200, or 1-888-786-0101

UNITED STATES PATENT AND TRADEMARK OFFICE

Commissioner for Patents
United States Patent and Trademark Office
P.O. Box 1450

MAILED
FEB 23 2012
OFFICE OF PETITIONS

BLAKELY SOKOLOFF TAYLOR & ZAFMAN LLP
1279 OAKMEAD PARKWAY
SUNNYVALE CA 94085-4040

In re Application of : DECISION ON REQUEST TO
Yasuyuki MIZUURA : PARTICIPATE IN PPH PROGRAM
Application No. 13/093,583 : AND PETITION TO MAKE SPECIAL
Filed: April 25, 2011 : UNDER 37 CFR 1.102(a)
Atty. Docket No.: 6639P1185 :
For: INFORMATION PROCESSING APPARATUS AND DEVICE CONTROL METHOD

This is a decision on the request to participate in the Patent Prosecution Highway (PPH) program and the petition under 37 CFR 1.102(a), filed January 25, 2012 to make the above-identified application special.

The petition and request are **DISMISSED**.

A grantable request to participate in the PPH (patent prosecution highway) program and petition to make special require:

(1) the U.S. application is a Paris Convention application which either validly claims priority under 35 U.S.C. 119(a) and 37 CFR 1.55 to one or more applications filed in the JPO (Japanese Patent Office) or claims priority to a PCT application that contains no priority claims. Alternatively, it can be a national stage application under the PCT which validly claims priority to an application filed in the JPO or claims priority to a PCT application that contains no priority claims. It can also be a "bypass application" filed under 35 U.S.C. 111(a) which validly claims benefit under 35 U.S.C. 120 to a PCT application, which PCT application validly claims priority to an application filed in the JPO or claims priority to a PCT application that contains no priority claims, or contains no priority claim;

(2) applicant must submit a copy of the allowable/patentable claim(s) from the JPO application(s) along with an English translation thereof and a statement that the English translation is accurate;

(3) all the claims in the U.S. application must sufficiently correspond or be amended to sufficiently correspond to the allowable/patentable claim(s) in the JPO application(s);

(4) examination of the U.S. application has not begun;

(5) applicant must submit a copy of all the office actions from each of the JPO application(s) containing the allowability/patentable claim(s) along with an English translation thereof and a statement that the English translation is accurate; and

(6) applicant must submit an IDS listing the documents cited by the JPO examiner in the JPO office action along with copies of documents except U.S. patents or U.S. patent application publications.

Requirements (1) to (2) and (4) to (6) above are considered to have been met. However, the request to participate in the PPH program and petition fail to meet requirement (3).

Regarding requirement (3), the claims in the U.S. application does not sufficiently correspond to the claims in the PCT application. Specifically, independent claims 1 and 5 do not correspond.

Applicant is given **ONE** opportunity with a time period of **ONE MONTH** or **THIRTY DAYS**, whichever is longer, from the mailing date of this decision to correct the deficiencies. **NO EXTENSION OF TIME UNDER 37 CFR 1.136 IS PERMITTED.** If the deficiencies are not corrected within the time period given, the application will await action in its regular turn.

Response must be filed via the Electronic Filing System (EFS) using the document description: Petition to make special under Patent Pros. Hwy. Any preliminary amendments and IDS submitted with the PPH documents must be separately indexed as a preliminary amendment and IDS, respectively.

Telephone inquiries concerning this decision should be directed to Robert DeWitty, Petition Attorney, Office of Petitions at 571-272-8427.

All other inquiries concerning the examination or status of the application is accessible in the PAIR system at http://www.uspto.gov/ebc/index.html.

Thurman K. Page

David Bucci
Petitions Examiner
Office of Petitions

UNITED STATES PATENT AND TRADEMARK OFFICE

Commissioner for Patents
United States Patent and Trademark Office
P.O. Box 1450

MAILED

APR 05 2012

OFFICE OF PETITIONS

BLAKELY SOKOLOFF TAYLOR & ZAFMAN LLP
1279 OAKMEAD PARKWAY
SUNNYVALE CA 94085-4040

In re Application of : DECISION ON REQUEST TO
Yasuyuki MIZUURA : PARTICIPATE IN PPH PROGRAM
Application No. 13/093,583 : AND PETITION TO MAKE SPECIAL
Filed: April 25, 2011 : UNDER 37 CFR 1.102(a)
Atty. Docket No.: 6639P1185 :
For: INFORMATION PROCESSING APPARATUS AND DEVICE CONTROL METHOD

This is a decision on the renewed request to participate in the Patent Prosecution Highway (PPH) program and the petition under 37 CFR 1.102(a), filed March 23, 2012 to make the above-identified application special.

The petition and request are **GRANTED**.

A grantable request to participate in the PPH (patent prosecution highway) program and petition to make special require:

(1) the U.S. application is a Paris Convention application which either validly claims priority under 35 U.S.C. 119(a) and 37 CFR 1.55 to one or more applications filed in the JPO (Japanese Patent Office) or claims priority to a PCT application that contains no priority claims. Alternatively, it can be a national stage application under the PCT which validly claims priority to an application filed in the JPO or claims priority to a PCT application that contains no priority claims. It can also be a "bypass application" filed under 35 U.S.C. 111(a) which validly claims benefit under 35 U.S.C. 120 to a PCT application, which PCT application validly claims priority to an application filed in the JPO or claims priority to a PCT application that contains no priority claims, or contains no priority claim;

(2) applicant must submit a copy of the allowable/patentable claim(s) from the JPO application(s) along with an English translation thereof and a statement that the English translation is accurate;

(3) all the claims in the U.S. application must sufficiently correspond or be amended to sufficiently correspond to the allowable/patentable claim(s) in the JPO application(s);

(4) examination of the U.S. application has not begun;

(5) applicant must submit a copy of all the office actions from each of the JPO application(s) containing the allowability/patentable claim(s) along with an English translation thereof and a statement that the English translation is accurate; and

(6) applicant must submit an IDS listing the documents cited by the JPO examiner in the JPO office action along with copies of documents except U.S. patents or U.S. patent application publications.

The request to participate in the PPH program and petition comply with the above requirements. Accordingly, the above-identified application has been accorded "special" status.

Telephone inquiries concerning this decision should be directed to Robert DeWitty, Petition Attorney, Office of Petitions at 571-272-8427.

All other inquiries concerning the examination or status of the application is accessible in the PAIR system at http://www.uspto.gov/ebc/index.html.

This application will be forwarded to Technology Center Art Unit 2115 for action commensurate with this decision.

Thurman K Page

David Bucci
Petitions Examiner
Office of Petitions

UNITED STATES PATENT AND TRADEMARK OFFICE

UNITED STATES DEPARTMENT OF COMMERCE
United States Patent and Trademark Office
Address: COMMISSIONER FOR PATENTS
P.O. Box 1450
Alexandria, Virginia 22313-1450
www.uspto.gov

APPLICATION NO.	FILING DATE	FIRST NAMED INVENTOR	ATTORNEY DOCKET NO.	CONFIRMATION NO.
13/093,591	04/25/2011	Himio Yamauchi	KATOSH.113AUS	8982

20995 7590 09/14/2011

KNOBBE MARTENS OLSON & BEAR LLP
2040 MAIN STREET
FOURTEENTH FLOOR
IRVINE, CA 92614

EXAMINER	
ART UNIT	PAPER NUMBER
2482	

NOTIFICATION DATE	DELIVERY MODE
09/14/2011	ELECTRONIC

Please find below and/or attached an Office communication concerning this application or proceeding.

The time period for reply, if any, is set in the attached communication.

Notice of the Office communication was sent electronically on above-indicated "Notification Date" to the following e-mail address(es):

jcartee@kmob.com
efiling@kmob.com
eOAPilot@kmob.com

UNITED STATES PATENT AND TRADEMARK OFFICE

Commissioner for Patents
United States Patent and Trademark Office
P.O. Box 1450
Alexandria, VA 22313-1450
www.uspto.gov

Knobbe Martens Olson & Bear LLP
2040 Main Street
Fourteenth Floor
Irvine CA 92614

In re Application of: Yamauchi
Application No. 13/093591
Filed: April 25, 2011
For: Image Processor, Image Display Apparatus and Image Processing Method

DECISION ON REQUEST TO PARTICIPATE IN PATENT PROSECUTION HIGHWAY PROGRAM AND PETITION TO MAKE SPECIAL UNDER 37 CFR 1.102(a)

This is a decision on the request to participate in the Patent Prosecution Highway (PPH) program and the petition under 37 CFR 1.102(a), filed August 12, 2011, to make the above-identified application special.

The petition is **GRANTED.**

A grantable request to participate in the PPH program and petition to make special require:

1. The U.S. application for which participation in the PPH program is requested and the corresponding JPO application must have the same priority/filing date;

2. Applicant must submit a copy of:
   a. The allowable/patentable claim(s) from the JPO application(s);
   b. An English translation of the allowable/patentable claim(s); and
   c. A statement that the English translation is accurate;

3. Applicant must
   a. Ensure all the claims in the U.S. application must sufficiently correspond or be amended to sufficiently correspond to one or more of those claims indicated as allowable/patentable claim(s) in the JPO application(s);
   b. Note that claims are considered to "sufficiently correspond" where, accounting for differences due to translations and claim format, the claims in the USPTO are of the same or similar scope as the claims in the JPO, or the claims in the USPTO are narrower in scope than the claims in the JPO. In this regard, a claim that is narrower in scope occurs when a JPO claim is amended to be further limited by an additional feature that is supported in the specification (description and/or claims). A claim in the USPTO which introduces a new/different category of claims to those claims indicated as allowable in the JPO is not considered to sufficiently correspond. For example, if the JPO claims only contain claims to a process of manufacturing a product, then the claims in the USPTO are not considered to sufficiently correspond if the

USPTO claims introduce product claims that are dependent on the corresponding process claims; and

c. Submit a claims correspondence table in English;

4. Examination of the U.S. application has not begun;

5. Applicant must submit:
   a. Documentation of prior office action:
      i. a copy of the office action(s) just prior to the "Decision to Grant a Patent" from each of the JPO application(s) containing the allowable/patentable claim(s) or
      ii. if the allowable/patentable claims(s) are from a "Notification of Reasons for Refusal" then the Notification of Reasons for Refusal or
      iii. if the JPO application is a first action allowance then no office action from the JPO is necessary should be indicated on the request/petition form;
   b. An English language translation of the JPO Office action from (5)(a)(i)-(ii) above
   c. A statement that the English translation is accurate (if the translation is not a machine translation provided by the JPO);

6. Applicant must submit:
   a. An IDS listing the documents cited by the JPO examiner in the JPO office action (unless already submitted in this application)
   b. Copies of the documents except U.S. patents or U.S. patent application publications (unless already submitted in this application);

The request to participate in the PPH program and petition are found to comply with the above requirements. Accordingly, the above-identified application has been accorded "special" status.

Telephone inquiries concerning this decision should be directed to Tod Swann at 571-272-3612.

All other inquiries concerning the examination or status of the application is accessible in the PAIR system at http://www.uspto.gov/ebc/index.html.

The application is being forwarded to the examiner for action on the merits commensurate with this decision.

/Tod Swann/
Tod Swann
Quality Assurance Specialist
Technology Center 2400

UNITED STATES PATENT AND TRADEMARK OFFICE

UNITED STATES DEPARTMENT OF COMMERCE
United States Patent and Trademark Office
Address: COMMISSIONER FOR PATENTS
P.O. Box 1450
Alexandria, Virginia 22313-1450
www.uspto.gov

APPLICATION NO.	FILING DATE	FIRST NAMED INVENTOR	ATTORNEY DOCKET NO.	CONFIRMATION NO.
13/093,626	04/25/2011	Kenji Nitobe	8073P1189	9052

7590 01/20/2012

BLAKELY SOKOLOFF TAYLOR & ZAFMAN LLP
1279 OAKMEAD PARKWAY
SUNNYVALE, CA 94085-4040

EXAMINER	
LUEBKE, RENEE S	
ART UNIT	PAPER NUMBER
2833	
MAIL DATE	DELIVERY MODE
01/20/2012	PAPER

DECISION GRANTING PETITION UNDER 37 CFR 1.138(d)

The declaration of express abandonment is recognized

This is in response to the petition under 37 CFR 1.138(d), requesting for a refund of any previously paid search fee and excess claims fee in the above-identified application.

The petition is granted.

The express abandonment is recognized. Any previously paid search fee and excess claims fee are hereby refunded.

Telephone inquiries should be directed to the Office of Data Management at (571) 272-4200.

Betty Powell

Patent Publication Branch
Office of Data Management

UNITED STATES PATENT AND TRADEMARK OFFICE

Commissioner for Patents
United States Patent and Trademark Office
P.O. Box 1450
Alexandria, VA 22313-1450
www.uspto.gov

BRIAN S. BOYER, PH.D.
493 SEAPORT CT
SUITE 105
REDWOOD CITY, CA 94063

MAILED

JUL 05 2011

OFFICE OF PETITIONS

In re Application of

Steven Lukacsy
Application No. 13/093,633
Filed: April 25, 2011
Attorney Docket No. LUKAP001.US01

DECISION ON PETITION
TO MAKE SPECIAL UNDER
37 CFR 1.102(c)(1)

This is a decision on the petition under 37 CFR 1.102(c)(1), filed April 25, 2011, to make the above-identified application special based on applicant's age as set forth in M.P.E.P. § 708.02, Section IV.

The petition is **GRANTED**.

A grantable petition to make an application special under 37 CFR 1.102(c)(1) and MPEP § 708.02, Section IV: Applicant's Age must be accompanied by evidence showing that at least one of the applicants is 65 years of age, or more, such as a birth certificate or a statement by applicant. No fee is required

The instant petition includes a statement signed by applicant's representative that he is in possession of proof of applicant's age. Accordingly, the above-identified application has been accorded "special" status.

Telephone inquiries concerning this decision should be directed to undersigned at 571-272-1642.

All other inquiries concerning either the examination or status of the application should be directed to the Technology Center.

The application is being forwarded to the Technology Center Art Unit 3636 for action on the merits commensurate with this decision.

/AMW/
April M. Wise
Petitions Examiner
Office of Petitions

Doc Code: PET.GREEN
Document Description: Petition for Green Tech Pilot

PTO/SB/420 (03-11)

PETITION TO MAKE SPECIAL UNDER THE GREEN TECHNOLOGY PILOT PROGRAM

Attorney Docket Number: 04995-P0007B	Application Number (if known):	Filing date: April 25, 2011

First Named Inventor: Kurt A. Burkhart, Sr.

Title: Integrated Bulk Fluids Management System

APPLICANT HEREBY REQUESTS TO PARTICIPATE IN THE GREEN TECHNOLOGY PILOT PROGRAM FOR THE ABOVE-IDENTIFIED APPLICATION. See Instruction Sheet on page 2.

This petition must be timely filed electronically using the USPTO electronic filing system, EFS-Web.

1. By filing this petition:

   Applicant is requesting early publication: Applicant hereby requests early publication under 37 CFR 1.219 and the publication fee set forth in 37 CFR 1.18(d) accompanies this request.

2. By filing this petition: applicant is agreeing to make an election without traverse in a telephonic interview and elect an invention that meets the eligibility requirements for the Green Technology Pilot Program, if the Office determines that the claims are not obviously directed to a single invention. See Instruction Sheet.

3. This request is accompanied by statements of special status for the eligibility requirement.

4. The application contains no more than three (3) independent claims and twenty (20) total claims.

5. The application does not contain any multiple dependent claims.

6. Other attachments: _____

Signature /Gene S. Winter/	Date April 25, 2011
Name (Print/Typed) Gene S. Winter	Registration Number 28352

Note: *Signatures of all the inventors or assignees of record of the entire interest or their representative(s) are required in accordance with 37 CFR 1.33 and 11.18. Please see 37 CFR 1.4(d) for the form of the signature. If necessary, submit multiple forms for more than one signature, see below*.*

☐ *Total of _____ forms are submitted.

If you need assistance in completing the form, call 1-800-PTO-9199 and select option 2.

Privacy Act Statement

The **Privacy Act of 1974 (P.L. 93-579)** requires that you be given certain information in connection with your submission of the attached form related to a patent application or patent. Accordingly, pursuant to the requirements of the Act, please be advised that: (1) the general authority for the collection of this information is 35 U.S.C. 2(b)(2); (2) furnishing of the information solicited is voluntary; and (3) the principal purpose for which the information is used by the U.S. Patent and Trademark Office is to process and/or examine your submission related to a patent application or patent. If you do not furnish the requested information, the U.S. Patent and Trademark Office may not be able to process and/or examine your submission, which may result in termination of proceedings or abandonment of the application or expiration of the patent.

The information provided by you in this form will be subject to the following routine uses:

1. The information on this form will be treated confidentially to the extent allowed under the Freedom of Information Act (5 U.S.C. 552) and the Privacy Act (5 U.S.C 552a). Records from this system of records may be disclosed to the Department of Justice to determine whether disclosure of these records is required by the Freedom of Information Act.
2. A record from this system of records may be disclosed, as a routine use, in the course of presenting evidence to a court, magistrate, or administrative tribunal, including disclosures to opposing counsel in the course of settlement negotiations.
3. A record in this system of records may be disclosed, as a routine use, to a Member of Congress submitting a request involving an individual, to whom the record pertains, when the individual has requested assistance from the Member with respect to the subject matter of the record.
4. A record in this system of records may be disclosed, as a routine use, to a contractor of the Agency having need for the information in order to perform a contract. Recipients of information shall be required to comply with the requirements of the Privacy Act of 1974, as amended, pursuant to 5 U.S.C. 552a(m).
5. A record related to an International Application filed under the Patent Cooperation Treaty in this system of records may be disclosed, as a routine use, to the International Bureau of the World Intellectual Property Organization, pursuant to the Patent Cooperation Treaty.
6. A record in this system of records may be disclosed, as a routine use, to another federal agency for purposes of National Security review (35 U.S.C. 181) and for review pursuant to the Atomic Energy Act (42 U.S.C. 218(c)).
7. A record from this system of records may be disclosed, as a routine use, to the Administrator, General Services, or his/her designee, during an inspection of records conducted by GSA as part of that agency's responsibility to recommend improvements in records management practices and programs, under authority of 44 U.S.C. 2904 and 2906. Such disclosure shall be made in accordance with the GSA regulations governing inspection of records for this purpose, and any other relevant (*i.e.*, GSA or Commerce) directive. Such disclosure shall not be used to make determinations about individuals.
8. A record from this system of records may be disclosed, as a routine use, to the public after either publication of the application pursuant to 35 U.S.C. 122(b) or issuance of a patent pursuant to 35 U.S.C. 151. Further, a record may be disclosed, subject to the limitations of 37 CFR 1.14, as a routine use, to the public if the record was filed in an application which became abandoned or in which the proceedings were terminated and which application is referenced by either a published application, an application open to public inspection or an issued patent.
9. A record from this system of records may be disclosed, as a routine use, to a Federal, State, or local law enforcement agency, if the USPTO becomes aware of a violation or potential violation of law or regulation.

PATENT
04995-P0007B GSW/RDG

IN THE UNITED STATES PATENT AND TRADEMARK OFFICE

Applicants	Kurt A. Burkhart, Sr., *et al.*
Application No. Pending	Filing Date: April 25, 2011
Title of Application:	Integrated Bulk Fluids Management System

Mail Stop Amendment
Commissioner for Patents
Post Office Box 1450
Alexandria, VA 22313-1450

Request to Participate In Green Technology Pilot Program
And Request to Make Special Pursuant to 37 CFR § 1.102 (c)(ii)

Applicant filed this Petition to Make Special pursuant to 37 CFR § 1.102 (c)(ii) and MPEP § 708.02 based on the fact that the application materially enhances the quality of the environment of mankind by contributing to the restoration or maintenance of the basic life-sustaining natural elements, i.e., air, water, and soil.

The Application has a total of 20 claims with 3 independent claims and no multiple dependent claims. The claims are directed to a single invention that materially contributes to the development of systems that treat and control the flow of water, such as stormwater, and thus contributes to the maintenance of water and soil.

The required publication fee under 37 C.F.R. 1.18(d) is filed herewith. In addition, the Commissioner for Patents is hereby authorized to charge any deficiency, or credit any overpayment, to Deposit Account No. 19-4516.

Applicant's request to participate in the Green Technology Pilot Program and Request to Make Special is believed to be in condition for granting and a favorable decision is hereby requested.

Respectfully submitted,

April 25, 2011

/Gene S. Winter/

Gene S. Winter, Registration No. 28,352
Roy D. Gross, Registration No. 63,524
Attorneys for Applicants
ST.ONGE STEWARD JOHNSTON & REENS LLC
986 Bedford Street
Stamford, CT 06905-5619
Tel. 203 324-6155

UNITED STATES PATENT AND TRADEMARK OFFICE

UNITED STATES DEPARTMENT OF COMMERCE
United States Patent and Trademark Office
Address: COMMISSIONER FOR PATENTS
P.O. Box 1450
Alexandria, Virginia 22313-1450
www.uspto.gov

APPLICATION NO.	FILING DATE	FIRST NAMED INVENTOR	ATTORNEY DOCKET NO.	CONFIRMATION NO.
13/093,665	04/25/2011	Kurt A. Burkhart SR.	04995-P0007B	9136

24126 7590 09/08/2011

ST. ONGE STEWARD JOHNSTON & REENS, LLC
986 BEDFORD STREET
STAMFORD, CT 06905-5619

EXAMINER	
ART UNIT	PAPER NUMBER
3753	

MAIL DATE	DELIVERY MODE
09/08/2011	PAPER

Please find below and/or attached an Office communication concerning this application or proceeding.

The time period for reply, if any, is set in the attached communication.

UNITED STATES PATENT AND TRADEMARK OFFICE

Commissioner for Patents
United States Patent and Trademark Office
P.O. Box 1450
Alexandria, VA 22313-1450
www.uspto.gov

ST. ONGE STEWARD JOHNSTON & REENS, LLC
986 BEDFORD STREET
STAMFORD CT 06905-5619

In re Application of
BURKHART, KURT A. SR. et al
Application No. 13/093,665
Filed: April 25, 2011
Attorney Docket No. 04995-P0007B

DECISION ON PETITION
TO MAKE SPECIAL UNDER
THE GREEN TECHNOLOGY
PILOT PROGRAM

This is a decision on the petition under 37 CFR 1.102, filed April 25, 2011, to make the above-identified application special under the pilot program for applications pertaining to Green Technologies as set forth in 74 Federal Register Notice 64666 (December 8, 2009) and amended by 75 Federal Register Notice 28554 (May 21, 2010) and 75 Federal Register Notice 69049 (November 10, 2010).

The petition is dismissed.

A grantable petition to make an application special under 37 CFR 1.102 and the pilot program as set forth in 74 FR 64666 must be directed to a nonprovisional application filed under 35 USC 111(a) or be a national stage entry under 35 USC 371, exclusive of any reissue applications.

If reconsideration of this decision is desired, a petition for reconsideration must be filed within ONE (1) MONTH OR THIRTY (30) DAYS from the mail date of this decision, whichever is longer. No extension of this time limit can be granted under 37 CFR 1.136(a) or (b). The petition for reconsideration should include an exhaustive attempt to provide the lacking item(s) noted below, since, after a decision on the petition for reconsideration, no further reconsideration or review of the matter will be undertaken by the Director.

In order to qualify for special status, the following requirements must be met. 1) The application must have no more than 3 independent claims and no more than 20 total claims. 2) The application must not contain any multiple dependent claims. 3) The petition must state the basis for seeking special status, i.e., the claimed invention either: A) materially enhances the quality of the environment or B) materially contributes to: i) the discovery or development of renewable energy resources, ii) the more efficient utilization and conservation of energy resources, or iii) greenhouse gas emission reduction. 4) If the disclosure is not clear on its face that the claimed invention materially contributes under category (A) or (B), the petition must be accompanied by a statement by the applicant, assignee, or an attorney/agent registered to practice before the

Office explaining how the materiality standard is met. 5) A statement that applicant will agree to make an election without traverse in a telephonic interview if a restriction requirement is made by the examiner. 6) The petition to make special must be filed electronically. 7) The petition must be filed at least one day prior to the date that a first Office Action appears in the Patent Application Information Retrieval (PAIR) system. 8) The petition must be accompanied by a request for early publication in compliance with 37 CFR 1.219 and include the publication fee as set forth in 37 CFR 1.18(d).

The requirement for a fee for consideration of the petition to make special for applications pertaining to Green Technologies has been waived. The petition lacks item # 4.

In regard to item 4, petitioner should note that the instant petition includes a statement identifying the basis for the special status (i.e., whether the instant invention (1) materially enhances the quality of the environment or materially contributes to (2) development of renewable energy resources or energy conservation, or (3) greenhouse gas reduction) as required by sections II and III of the notice. However, as stated in the notice, applicant must also provide a statement pertaining to the materiality standard if the application disclosure is not clear on its face as to the materiality of the basis for the special status of the invention. This petition lacks such a statement and it is not agreed that the application on its face meets that materiality standard. Petitioner states that the claimed invention relates to green technology. This is not convincing. It is not clear how the claimed water flow control modular system will provide and enhance the quality of the environment or contribute to development of renewable energy resources or energy conservation or greenhouse gas reduction. Claims 1, 17 and 31 have nothing to do with green technologies. There is no relationship between the statement and the claimed subject matter.

Any reconsideration of this decision should be submitted through the USPTO electronic filing system, EFS-Web, and selecting the document description of "Petition for Green Tech Pilot" on the EFS-Web screen.

Telephone inquiries concerning this decision should be directed to Henry C. Yuen at 571-272-4856. The application will be forwarded to the Technology Center Art Unit 3753 for action in its regular turn.

/Henry C. Yuen/

Henry C. Yuen
Quality Assurance Specialist
Technology Center 3700

Doc Code: PET.GREEN
Document Description: Petition for Green Tech Pilot

PTO/SB/420 (03-11)

PETITION TO MAKE SPECIAL UNDER THE GREEN TECHNOLOGY PILOT PROGRAM

Attorney Docket Number: 04995-P0007B	Application Number (if known): 13/093,665	Filing date: April 25, 2011

First Named Inventor: Kurt A. Burkhart, Sr., et al.

Title: Integrated Bulk Fluids Management System

APPLICANT HEREBY REQUESTS TO PARTICIPATE IN THE GREEN TECHNOLOGY PILOT PROGRAM FOR THE ABOVE-IDENTIFIED APPLICATION. **See Instruction Sheet on page 2.**

This petition must be timely filed electronically using the USPTO electronic filing system, EFS-Web.

1. By filing this petition:

   Applicant is requesting early publication: Applicant hereby requests early publication under 37 CFR 1.219 and the publication fee set forth in 37 CFR 1.18(d) accompanies this request.

2. By filing this petition: applicant is agreeing to make an election without traverse in a telephonic interview and elect an invention that meets the eligibility requirements for the Green Technology Pilot Program, if the Office determines that the claims are not obviously directed to a single invention. See Instruction Sheet.

3. This request is accompanied by statements of special status for the eligibility requirement.

4. The application contains no more than three (3) independent claims and twenty (20) total claims.

5. The application does not contain any multiple dependent claims.

6. Other attachments: _____

Signature /Gene S. Winter/	Date October 11, 2011
Name (Print/Typed) Gene S. Winter	Registration Number 28352

Note: *Signatures of all the inventors or assignees of record of the entire interest or their representative(s) are required in accordance with 37 CFR 1.33 and 11.18. Please see 37 CFR 1.4(d) for the form of the signature. If necessary, submit multiple forms for more than one signature, see below*.*

☐ *Total of _____ forms are submitted.

If you need assistance in completing the form, call 1-800-PTO-9199 and select option 2.

PATENT
04995-P0007B GSW/RDG

IN THE UNITED STATES PATENT AND TRADEMARK OFFICE

Applicants	Kurt A. Burkhart, Sr., *et al.*
Application No. 13/093,665	Filing Date: April 25, 2011
Title of Application:	Integrated Bulk Fluids Management System

Mail Stop Amendment
Commissioner for Patents
Post Office Box 1450
Alexandria, VA 22313-1450

Petition for Reconsideration of Request to Participate In Green Technology Pilot Program And Request to Make Special Pursuant to 37 CFR § 1.102 (c)(ii)

This is a petition for reconsideration of the dismissal of Applicant's Petition to Make Special pursuant to 37 CFR § 1.102 (c)(ii) and MPEP § 708.02. The Petition to Make Special pursuant to 37 CFR § 1.102 (c)(ii) has been dismissed because the Examiner believes that the disclosure is not clear on its face that the claimed invention A) materially enhances the quality of the environment or B) materially contributes to: i) the discovery or development of renewable energy resources, ii) the more efficient utilization and conservation of energy resources, or iii) the more efficient utilization and conservation of energy resources, or iii) greenhouse gas emission reduction.

To correct this deficiency, the Applicant has been asked to provide a statement explaining how the materiality standard is met. The deadline to correct this deficiency is one month from September 8, 2011 or October 8, 2011. Because October 8, 2011 falls on a Saturday and Monday October 10, 2011 is

Columbus Day (a Federal Holiday), a petition for reconsideration filed on Tuesday October 11, 2011 is to be considered timely.

The Applicant, through, its attorneys hereby submits a statement to comply with item #4. The Applicant submits that the claimed invention is directed to (A) materially enhancing the quality of the environment because the invention is directed to treating and controlling the flow of water, such as stormwater, and thus, the invention contributes to the maintenance and treatment of water, which improves water and energy conservation for the environment.

Specifically, the claimed invention materially enhances the quality of the environment because treating water eliminates waste, which is vital for the environment. Having clean stormwater that is treated also conserves water and energy because treated water will not have to be further treated by a municipal water filtration system prior to human use and/or consumption. Moreover, treated stormwater materially affects the quality of the soil (and in fact, the entirety of the natural environment) surrounding a given system of the claimed invention.

As described in the specification of the application, specifically in paragraphs [00015] – [00024], prior art storm water systems do not disclose a modular stormwater system that allows for treatment of stormwater within the system. Instead, prior art systems have primarily functioned as large holding

vessels for water, with treatment and flow control devices occurring *outside* of the system structure.

The present invention has claims that are directed to treatment and filtration of stormwater, which materially enhances the quality of the environment. As described in paragraphs [00129] and [00191] – [00228], the invention allows for water reuse for fire protection, temperature control of warmed parking lot runoff, wastewater detention relieving undersized public utilities loading, combine sewer storage and treatment, and surge flow protection. (See paragraph [00227] of the specification).

Having clean water for these uses is beneficial for the environment and for human use and consumption. Moreover, treatment of water conserves water and energy as treated water will not have to be further treated by a municipal water filtration system.

Moreover, the present invention allows for a system having modules with specific water treatment functionality. The modules may have a trash rack and weir system to control the flow of water. The modules may have filtering, oil/water separation, TSS (total suspended solids), removal, trash and debris removal, nutrient reduction, and soluble chemical capture within the modules. Other advantages of the treatment modules include filtering, temperature regulation, oxygenation, introduction of chemical treatment, and sterilization capabilities all related to compartmentalized and indirect flow systems. (See paragraph [00192] of the specification).

The present invention also allows for harvesting, treatment, and reuse of rainwater. This has many beneficial environmental impacts, such as the use of greywater (or harvested rainwater) for flushing toilets, irrigation, or constructed wetlands. This reduces the energy required to process/treat water and preserves potable water (an increasing scarce resource in certain geographical regions).

Enclosed as Exhibit A is an advertising brochure explaining the harvesting advantages of the system. The system allows for pretreatment of source water and optionally has trash racks, an oil/water separation chamber, extended tss reduction and a filter system.

The system shown in Exhibit A also has walls, weirs, and baffles within the system that can facilitate the accumulation or reduction of head energy (or water flow energy), which can aid treatment and other system processes. This reduces the reliance on pumping mechanisms (which mostly require some type of external energy source), and thus materially affects the environment by reducing energy consumption.

Thus, the system of the claimed invention, as shown in Exhibit A, materially conserves water and reduces energy consumption, which materially enhances the quality of the environment.

Enclosed as Exhibit B is a website printout demonstrating that water harvesting solutions is a strong advocate of green building practices and can

support LEED certification. LEED is a program aimed at raising awareness of and promoting "green" building projects.

Water harvesting touches on principles embodied in the LEED certification including:

- Conserving water; and
- Reducing energy consumption.

The present application is directed towards achieving "green" results and LEED points can be received by have a stormwater design for building. The following LEED points can be achieved by the present application:

- Stormwater Design: Quantity Control - 1 point (SS Credit 6.1) – Reduce impervious cover, increase on-site infiltration, reduce pollution from stormwater runoff by eliminating contaminants;

- Stormwater Design: Quality Control - 1 point. (SS Credit 6.2) - Storm water treatment systems designed to remove 80% of the average annual post-development total suspended solids using rainwater recycling, vegetated roofs and swales, pervious pavement;

- Water Use Reduction: 20% Reduction - 1 point. (WE Credit Prerequisite 1) - 20% reduction in water use for building using alternative on-site sources of water such as rainwater, stormwater and greywater;

- Water Efficient Landscaping, Reduce by 50% - 2 points. (WE Credit 1.1) - Limit or eliminate the use of potable water for landscape irrigation by using captured rainwater, recycled waste water, groundwater and other means;

- Water Efficient Landscaping, No Potable Water Use or No Irrigation - 2 points in addition to WE Credit 1.1. (WE Credit 1.2) - Use only captured rainwater, recycled wastewater or recycled greywater for site irrigation;

- Innovative Wastewater Technologies – 2 points (WE Credit 2) Reduce generation of wastewater & potable water demand, while increasing the local aquifer recharge – use captured rainwater or recycled greywater to flush toilets and urinals or treat 50% of wastewater on-site to tertiary standards; and

- Water Use Reduction, 30% - 40% reduction – 2-4 points (WE Credit 3) - Maximize water efficiency within building to reduce the burden on municipal water supply & wastewater systems. Use alternative on-site sources of water such as rainwater, stormwater and greywater for non-potable applications such as toilet flushing and urinal flushing.

Thus, the for the foregoing reasons, the Applicant, through its Attorneys, respectfully submits that its invention materially enhances the quality of the environment and should be granted special status to participate in the Green Technology Pilot Program. Applicant asks the Examiner to reconsider the Applicant's petition to participate in the program.

The Commissioner for Patents is hereby authorized to charge any deficiency, or credit any overpayment, to Deposit Account No. 19-4516, if so required.

Respectfully submitted,

October 11, 2011 /Gene S. Winter/

Gene S. Winter, Registration No. 28,352
Roy D. Gross, Registration No. 63,524
Attorneys for Applicants
ST.ONGE STEWARD JOHNSTON & REENS LLC
986 Bedford Street
Stamford, CT 06905-5619
Tel. 203 324-6155

Exhibit A

RETAIN-IT ™

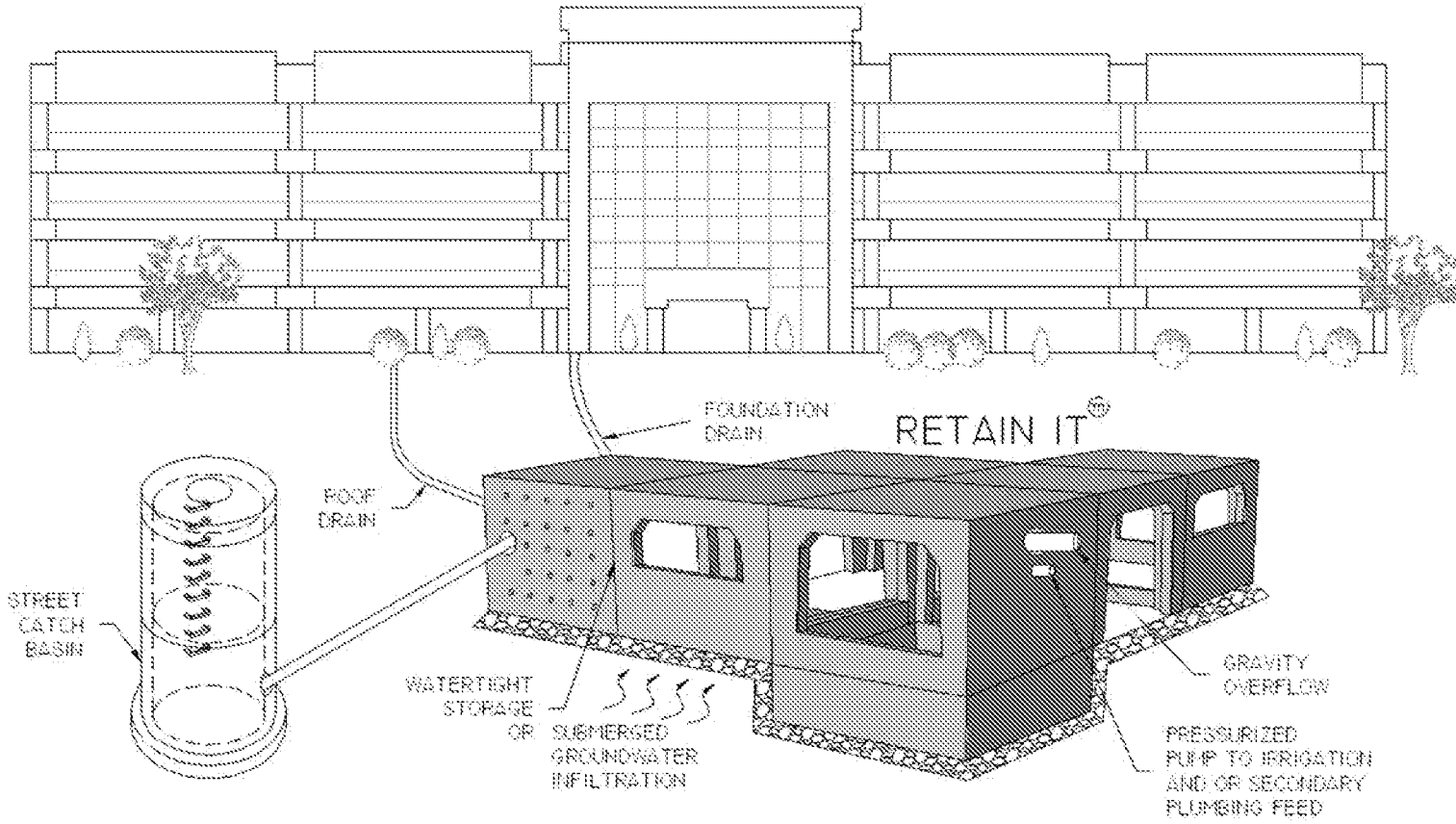

HARVESTING:

- PRESSURIZED PUMPING
- GRAVITY FLOW
- STANDPIPE OVERFLOW

STORAGE:

- WATERTIGHT DETENTION/RETENTION
- SUBMERGED GROUNDWATER INFILTRATION

SOURCE:

- ROOF DRAINS
- FOUNDATION DRAINS
- LANDSCAPE DRAINS
- STREET RUNOFF
- SUBMERGED GROUNDWATER INFILTRATION

OPTIONS:

1. INTEGRATE INTO STORM WATER MANAGEMENT SYSTEM (SWMS)
2. PRETREATMENT OF SOURCE WATER
3. SECONDARY NON-POTABLE WATER SOURCE

retain it
Stormwater Management Systems
www.retain-it.com

Rainwater Harvesting

RETAIN-IT ™

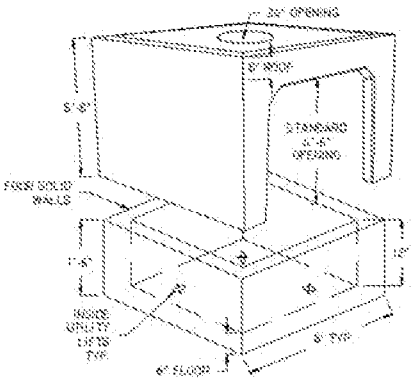

WATER QUALITY INLET MODULE
(PRIMARY SOLIDS CONTROL)

OPTIONS:
1. TRASH RACKS
2. OIL/WATER SEPARATION CHAMBER
3. EXTENDED TSS REDUCTION
4. FILTER SYSTEM

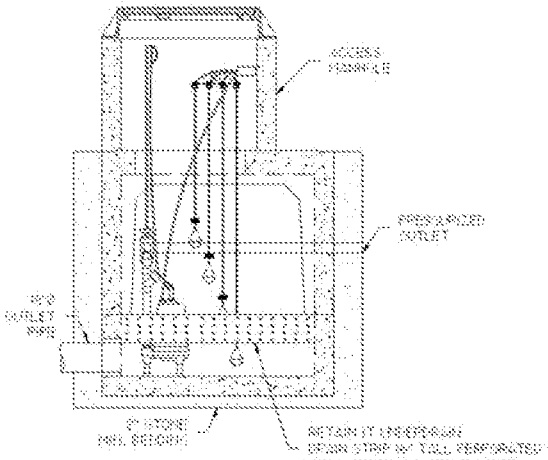

UNDERDRAIN PUMP SUMP
WITH FLOAT CONTROLS

STORMWATER HARVESTING SYSTEM PROCESS SCHEMATIC

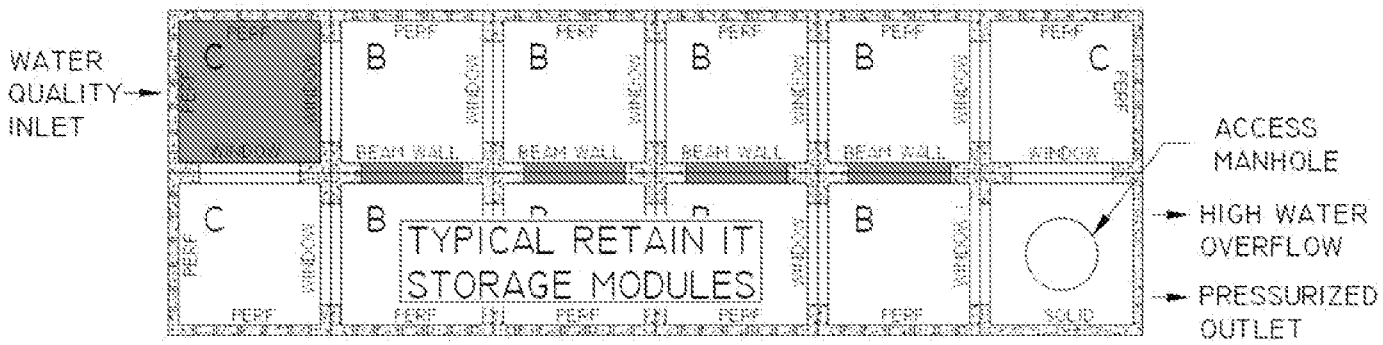

PLAN VIEW

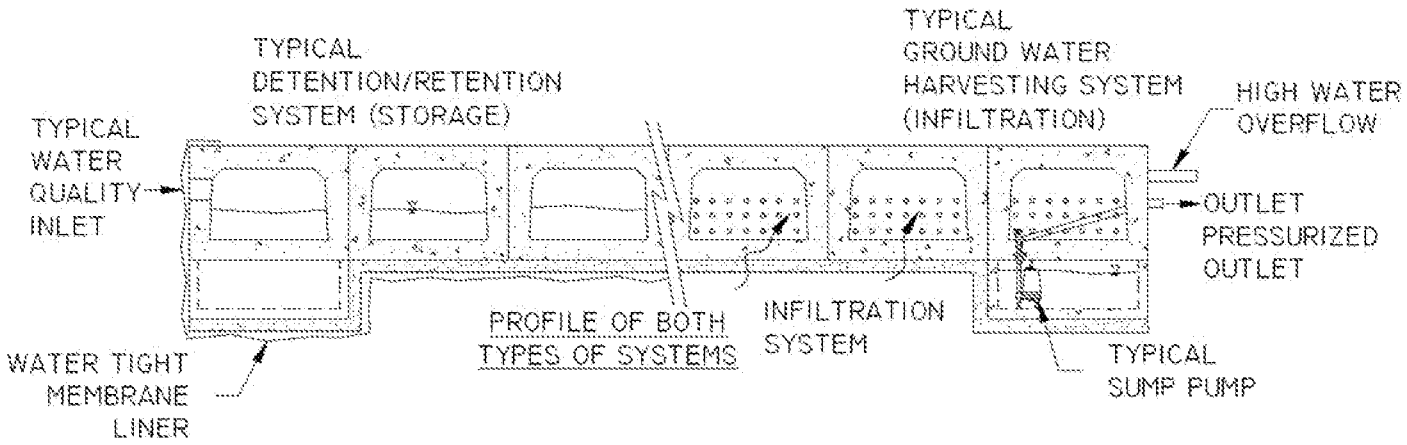

Exhibit B

About Water Harvesting

About Water Harvesting
Renewable Water Sources
Water Harvesting Methods
- Active Harvesting
- Passive Harvesting

Applications
- Cooling Towers & Harvesting
- Stormwater Harvesting

Selecting a System
- Storage Options for Harvesting
- Water Harvesting Calculator

LEED Certification
Resources
FAQs

LEED CERTIFICATION AND WATER HARVESTING

HARVESTING EFFORTS CAN EARN 10-14 LEED POINTS!

Many building owners interested in water harvesting are also considering LEED™ certification for their project. As a U.S. Green Building Council member, Water Harvesting Solutions is a strong advocate of green building practices and can support efforts by clients wishing to achieve LEED certification for their building.

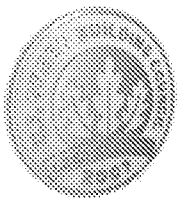

The LEED (Leadership in Energy and Environment Design) Green Building Rating System™ was devised as a voluntary, consensus-based national standard for developing high-performance, sustainable buildings. LEED was initially created by the U.S. Green Building Council (USGBC) to establish a common measurement to define "green building." It has since grown into a program aimed at raising awareness of and promoting integrated "green" building projects.

How is water harvesting important in a "green" building? Water harvesting touches on many of the principles embodied in the LEED certification. These include:

- Conserving water
- Reducing energy consumption
- Reducing the depletion of natural resources and materials
- Creating a sustainable site
- Use of innovative design

On average, a LEED™ certified building uses 30% less water than a conventional building, which translates to more than 1 million gallons of water saved per year. Reducing the amount of water that needs to be conveyed to and treated by municipal wastewater treatment facilities also reduces pumping and process energy required to these systems. LEED™, through practices like rainwater harvesting, promotes on-site storage and use of rainwater and greywater to lower water consumption cost, and it reduces the impact on storm drainage and municipal treatment systems. Specifically, water harvesting efforts can earn a significant number of LEED points across several categories:

LEED™ Points for Water Harvesting Efforts:

Stormwater Design: Quantity Control - 1 point (SS Credit 6.1)
Reduce impervious cover, increase on-site infiltration, reduce pollution from stormwater runoff by eliminating contaminants

Stormwater Design: Quality Control - 1 point. (SS Credit 6.2)
Storm water treatment systems designed to remove 80% of the average annual post-development total suspended solids using rainwater recycling, vegetated roofs and swales, pervious pavement.

Heat Island Effect: Roof - 1 point. (SS Credit 7.2)
Reduce heat islands to minimize impact on the microclimate and human and wildlife habitat by installing a vegetated roof.

Water Use Reduction: 20% Reduction - 1 point. (WE Credit Prerequisite 1)
20% reduction in water use for building using alternative on-site sources of water such as rainwater, stormwater and greywater

Water Efficient Landscaping, Reduce by 50% - 2 points. (WE Credit 1.1)
Limit or eliminate the use of potable water for landscape irrigation by using captured rainwater, recycled waste water, groundwater and other means.

Water Efficient Landscaping, No Potable Water Use or No Irrigation - 2 points in addition to WE Credit 1.1. (WE Credit 1.2)
Use only captured rainwater, recycled wastewater or recycled greywater for site irrigation.

Innovative Wastewater Technologies - 2 points (WE Credit 2)
Reduce generation of wastewater & potable water demand, while increasing the local aquifer recharge - use captured rainwater or recycled greywater to flush toilets and urinals or treat 50% of wastewater on-site to tertiary standards.

Water Use Reduction, 30% - 40% reduction - 2-4 points (WE Credit 3)
Maximize water efficiency within building to reduce the burden on municipal water supply & wastewater systems. Use alternative on -site sources of water such as rainwater, stormwater and greywater for non-potable applications such as toilet flushing and urinal flushing.

Innovation Design Credit - 1 point. (ID Credit 1-1.5)
Projects that result in exceptional performance above the requirement set by LEED.

For clients wishing LEED certification, Water Harvesting Solutions will work with project architects and contractors to provide system recommendations and documentation to ensure that the water harvesting efforts maximize the LEED credits possible for the project.

Contact Wahaso now.

© 2010 Wahaso - Water Harvesting Solutions, Inc. All Rights Reserved

UNITED STATES PATENT AND TRADEMARK OFFICE

UNITED STATES DEPARTMENT OF COMMERCE
United States Patent and Trademark Office
Address: COMMISSIONER FOR PATENTS
P.O. Box 1450
Alexandria, Virginia 22313-1450
www.uspto.gov

APPLICATION NO.	FILING DATE	FIRST NAMED INVENTOR	ATTORNEY DOCKET NO.	CONFIRMATION NO.
13/093,665	04/25/2011	Kurt A. Burkhart SR.	04995-P0007B	9136

24126 7590 10/27/2011

ST. ONGE STEWARD JOHNSTON & REENS, LLC
986 BEDFORD STREET
STAMFORD, CT 06905-5619

EXAMINER	
ART UNIT	PAPER NUMBER
3753	

MAIL DATE	DELIVERY MODE
10/27/2011	PAPER

Please find below and/or attached an Office communication concerning this application or proceeding.

The time period for reply, if any, is set in the attached communication.

UNITED STATES PATENT AND TRADEMARK OFFICE

Commissioner for Patents
United States Patent and Trademark Office
P.O. Box 1450
Alexandria, VA 22313-1450
www.uspto.gov

ST. ONGE STEWARD JOHNSTON & REENS, LLC
986 BEDFORD STREET
STAMFORD CT 06905-5619

10/27/11

In re Application of :
Burkhart et al :
Application No. 13/093,665 :
Filed: 4/25/2011 :
Attorney Docket No. **04995-P0007B** :

DECISION ON PETITION
TO MAKE SPECIAL UNDER
THE GREEN TECHNOLOGY
PILOT PROGRAM

This is a decision on the request for reconsideration, filed 10/11/2011, to make the above-identified application special under the pilot program for applications pertaining to Green Technologies as set forth in 74 Federal Register Notice 64666 (December 8, 2009) and amended by 75 Federal Register Notice 28554 (May 21, 2010) and 75 Federal Register Notice 69049 (November 10, 2010).

The petition is **GRANTED**.

A grantable petition to make an application special under 37 CFR 1.102 and the pilot program as set forth in 74 FR 64666 must be directed to a nonprovisional application filed under 35 USC 111(a) or be a national stage entry under 35 USC 371, exclusive of any reissue applications.

In order to qualify for special status, the following requirements must be met. 1) The application must have no more than 3 independent claims and no more than 20 total claims. 2) The application must not contain any multiple dependent claims. 3) The petition must state the basis for seeking special status, i.e., the claimed invention either: A) materially enhances the quality of the environment or B) materially contributes to: i) the discovery or development of renewable energy resources, ii) the more efficient utilization and conservation of energy resources, or iii) greenhouse gas emission reduction. 4) If the disclosure is not clear on its face that the claimed invention materially contributes under category (A) or (B), the petition must be accompanied by a statement by the applicant, assignee, or an attorney/agent registered to practice before the Office explaining how the materiality standard is met. 5) A statement that applicant will agree to make an election without traverse in a telephonic interview if a restriction requirement is made by the examiner. 6) The petition to make special must be filed electronically. 7) The petition must be filed at least one day prior to the date that a first Office Action appears in the Patent Application Information Retrieval (PAIR) system. 8) The petition must be accompanied by a request for early publication in compliance with 37 CFR 1.219 and include the publication fee as set forth in 37 CFR 1.18(d).

The requirement for a fee for consideration of the petition to make special for applications pertaining to Green Technologies has been waived.

The instant petition complies with items 1 – 8 above. Accordingly, the above-identified application has been accorded "special" status.

Telephone inquires concerning this decision should be directed to Tom Dunn at 571-272-1171.

The application is being forwarded to the Technology Center Art Unit 3753 for action on the merits commensurate with this decision.

/Tom Dunn/

Tom Dunn
Quality Assurance Specialist
Technology Center 1700

UNITED STATES PATENT AND TRADEMARK OFFICE

Commissioner for Patents
United States Patent and Trademark Office
P.O. Box 1450
Alexandria, VA 22313-1450
www.uspto.gov

RICK H. KNOCK
SUITE 206
3456 CAMINO DEL RIO NORTH
SAN DIEGO CA 92108

MAILED

JAN 30 2012

OFFICE OF PETITIONS

In re Application of :
William Nordquist :
Application No. 13/093,688 : DECISION ON PETITION
Filed: April 25, 2011 : TO WITHDRAW
Attorney Docket No. 2010.1 : FROM RECORD
:

This is a decision on the Request to Withdraw as attorney or agent of record under 37 C.F.R. § 1.36(b), filed December 27, 2011.

The request is **APPROVED**.

The request was signed by Rick H. Knock on behalf of all the practitioners of record.

Applicant is reminded that there is no attorney of record at this time.

All future correspondence will be directed to inventor William Nordquist at the address indicated below.

Telephone inquiries concerning this decision should be directed to Irvin Dingle at (571) 272-3210.

Irvin Dingle
Petitions Examiner
Office of Petitions

cc: William Nordquist
2304 Sixth Avenue
San Diego, CA 92101

UNITED STATES PATENT AND TRADEMARK OFFICE

UNITED STATES DEPARTMENT OF COMMERCE
United States Patent and Trademark Office
Address: COMMISSIONER FOR PATENTS
P.O. Box 1450
Alexandria, Virginia 22313-1450
www.uspto.gov

APPLICATION NUMBER	FILING OR 371(C) DATE	FIRST NAMED APPLICANT	ATTY. DOCKET NO./TITLE
13/093,688	04/25/2011	William Nordquist	2010.1

CONFIRMATION NO. 9178

Rick H. Knock, Esq.
Suite 206
3456 Camino del Rio North
San Diego, CA 92108

POWER OF ATTORNEY NOTICE

OC000000052270016

Date Mailed: 01/30/2012

NOTICE REGARDING CHANGE OF POWER OF ATTORNEY

This is in response to the Power of Attorney filed 12/27/2011.

- The withdrawal as attorney in this application has been accepted. Future correspondence will be mailed to the new address of record. 37 CFR 1.33.

/idingle/

Office of Data Management, Application Assistance Unit (571) 272-4000, or (571) 272-4200, or 1-888-786-0101

UNITED STATES PATENT AND TRADEMARK OFFICE

UNITED STATES DEPARTMENT OF COMMERCE
United States Patent and Trademark Office
Address: COMMISSIONER FOR PATENTS
P.O. Box 1450
Alexandria, Virginia 22313-1450
www.uspto.gov

APPLICATION NUMBER	FILING OR 371(C) DATE	FIRST NAMED APPLICANT	ATTY. DOCKET NO./TITLE
13/093,688	04/25/2011	William Nordquist	2010.1

CONFIRMATION NO. 9178

William Nordquist
2304 Sixth Avenue
San Diego, CA 92101

POA ACCEPTANCE LETTER

OC000000052270023

Date Mailed: 01/30/2012

NOTICE OF ACCEPTANCE OF POWER OF ATTORNEY

This is in response to the Power of Attorney filed 12/27/2011.

The Power of Attorney in this application is accepted. Correspondence in this application will be mailed to the above address as provided by 37 CFR 1.33.

/idingle/

Office of Data Management, Application Assistance Unit (571) 272-4000, or (571) 272-4200, or 1-888-786-0101

UNITED STATES PATENT AND TRADEMARK OFFICE

UNITED STATES DEPARTMENT OF COMMERCE
United States Patent and Trademark Office
Address: COMMISSIONER FOR PATENTS
P.O. Box 1450
Alexandria, Virginia 22313-1450
www.uspto.gov

APPLICATION NO.	FILING DATE	FIRST NAMED INVENTOR	ATTORNEY DOCKET NO.	CONFIRMATION NO.
13/093,690	04/25/2011	Zhe Wang	HW 81393600AE	9180

74365 7590 06/14/2011

Slater & Matsil, L.L.P.
17950 Preston Road, Suite 1000
Dallas, TX 75252

EXAMINER	
ART UNIT	PAPER NUMBER
2614	

NOTIFICATION DATE	DELIVERY MODE
06/14/2011	ELECTRONIC

Please find below and/or attached an Office communication concerning this application or proceeding.

The time period for reply, if any, is set in the attached communication.

Notice of the Office communication was sent electronically on above-indicated "Notification Date" to the following e-mail address(es):

docketing@slater-matsil.com

UNITED STATES PATENT AND TRADEMARK OFFICE

Commissioner for Patents
United States Patent and Trademark Office
P.O. Box 1450
Alexandria, VA 22313-1450
www.uspto.gov

Slater & Matsil, L.L.P.
17950 Preston Road, Suite 1000
Dallas TX 75252

In re Application of: **WANG, ZHE**
Serial No.: **13/093,690**
Filed: **April 25, 2011**
Attorney Docket Number: **HW 81393600AE**
Title: **METHOD AND APPARATUS FOR DETECTING AUDIO SIGNALS**

DECISION ON PETITION TO MAKE SPECIAL FOR NEW APPLICATION UNDER 37 C.F.R. § 1.102 & M.P.E.P. § 708.02

This is a decision on the petition filed on April 25, 2011 requesting to make the above-identified application special for accelerated examination procedure under 37 C.F.R. § 1.102(d).

The petition to make the application special is **GRANTED**.

The application is eligible for accelerated examination and the petition complies with the conditions for granting the application special status pursuant to the "Change to Practice for Petitions in Patent Applications to Make Special and for Accelerated Examination" published June 26, 2006, in the Federal Register. (71 Fed. Reg. 36323).

The prosecution of the instant application will be conducted expeditiously according to the following guidelines.

1. The application will be docketed to an examiner and taken up for action within two weeks of the date of this decision.

2. Restriction Practice:
   If the examiner determines that the claims are not directed to a single invention, a telephone request to elect one single invention will be made pursuant to MPEP 812.01. As a prerequisite to the grant of this petition, the applicant has agreed to make an oral election, by telephone, without traverse. If the applicant refuses to make an election without traverse, or the examiner cannot reach the applicant after a reasonable effort, the examiner will treat the first claimed invention (invention defined by claim 1) as having being constructively elected without traverse for examination.

3. Office action:
   If it is determined that, after appropriate consultation, there is a potential rejection or any other issue to be addressed, the examiner will telephone the applicant and arrange an interview to discuss and resolve the issue. An Office action, other than a Notice of Allowance and Fee(s) Due (Notice of Allowance), will not be issued unless either: 1) an

interview was conducted but did not result in agreed to action that places the application in condition for allowance, or, 2) a determination is made that an interview would be unlikely to result in the application being placed in condition for allowance, and 3) an internal conference has been held to review any rejection of any claim.

4. Time for Reply:
An Office action other than a Notice of Allowance or a final Office action will set a shortened statutory period of one month or thirty days, whichever is longer, for reply with no extension of time available under 37 CFR 1.136(a). Failure to timely file a reply within this non-extendible period for reply will result in the abandonment of the application.

5. Reply by Applicant:
A timely reply to an Office action other than the Notice of Allowance must be submitted electronically via EFS or EFS-web and limited to addressing the rejections, objections and requirement made. Any amendment that attempts to: 1) add claims which would result in more than three pending independent claims or more than twenty pending total claims; 2) present claims not encompassed by the pre-examination search or an updated accelerated examination support document; or 3) present claims that are directed a non-elected invention or an invention other than that previously claimed and examined in the application, will be treated as not fully responsive and will not be entered.

   For any amendment to the claims (including any new claim) that is not encompassed by the accelerated examination support document, applicant must provide an updated accelerated examination support document that encompasses the amended or new claims at the time of filing of the amendment.

   To proceed expeditiously with the examination, it is recommended that a reply with amendments made to any claim or with any new claim being added be accompanied by an updated accelerated examination support document or a statement explaining how the amended or new claim is supported by the original accelerated examination support document.

6. Information Disclosure Statement (IDS):
Any IDS filed during prosecution must be submitted electronically via EFS or EFS-web, accompanied by an updated accelerated examination support document, and be in compliance with 37 CFR 1.97 and 1.98.

7. Post-Allowance Processing:
To expedite processing of the allowed application into a patent, the applicant must: 1) pay the required fees within one month of the date of the Notice of Allowance, and 2) not file any post allowance papers not required by the Office. In no event may the issue fee be paid and accepted later than three months from the date of the Notice of Allowance.

8. After-Final and Appeal Procedures:

To expedite prosecution, after receiving the final Office action, applicant must: 1) promptly file a notice of appeal, an appeal brief and appeal fees; and 2) not request a pre-appeal brief conference.

Any amendment, affidavit or other evidence filed after final Office action must comply with applicable rules and the requirements outlined in numbered paragraphs 5 and 6 above.

On appeal, the application will proceed according to normal appeal procedures. After appeal, the application will again be treated special.

9. Proceedings Outside the Normal Examination Process:
   If the application becomes involved in a proceeding that is outside the normal examination process (e.g., a secrecy order, national security review, interference proceeding, petitions under 37 CFR 1.181, 182 or 183), the application will be treated special before and after such proceeding.

10. Final Disposition:
    The twelve month goal of this accelerated examination procedure ends with a final disposition. The mailing of a final Office action, a Notice of Allowance, the filing of a Notice of Appeal, or the filing of a Request for Continued Examination (RCE) is the final disposition.

If, during prosecution, a paper is not filed electronically using EFS-web, a reply is filed but is not fully responsive, the application is involved in an appeal, or a proceeding outside normal examination process, the application will still be examined expeditiously, however, the final disposition may occur more than twelve months from the filing of the application.

Any inquiry regarding this decision should be directed to Daniel Swerdlow, Quality Assurance Specialist, at (571) 272-7531.

/Daniel Swerdlow/

Daniel Swerdlow
Quality Assurance Specialist
Technology Center 2600
Communications

UNITED STATES PATENT AND TRADEMARK OFFICE

Commissioner for Patents
United States Patent and Trademark Office
P.O. Box 1450
Alexandria, VA 22313-1450
www.uspto.gov

WILMERHALE/BOSTON
60 STATE STREET
BOSTON MA 02109

MAILED

OCT 18 2011

OFFICE OF PETITIONS

In re Application of :
Gregory V. Chase et al. :
Application No. 13/093,759 : DECISION ACCORDING STATUS
Filed: April 25, 2011 : UNDER 37 CFR 1.47(a)
Attorney Docket No. 2205977.00122US2 :

This is in response to the petition filed October 11, 2011 under 37 CFR 1.47(a).

The petition is **GRANTED**.

The above-identified application was filed on April 25, 2011 without an oath or declaration. Accordingly, on May 11, 2011, a "Notice To File Missing Parts Of Nonprovisional Application" ("Notice To File Missing Parts") was mailed, requiring an executed oath or declaration in compliance with 37 CFR 1.63 and a surcharge for its late filing.

In response, a three month extension of time request and the instant petition, seeking status under 37 CFR 1.47, was filed. Petitioners claim that joint inventor Mario Blanco refuses to execute the declaration.

A grantable petition under 37 CFR 1.47(a) requires: (1) proof that the non-signing inventor cannot be reached or refuses to sign the oath or declaration after having been presented with the application papers (specification, claims and drawings); (2) an acceptable oath or declaration in compliance with 35 U.S.C. §§ 115 and 116; (3) the petition fee; and (4) a statement of the last known address of the non-signing inventor.

The petition bears proof that the application papers were sent via email to Mr. Blanco. The evidence submitted also establishes that the email was in fact received by the non-signing inventor and that he has expressly refused to execute the oath or declaration. Neither has Mr. Blanco returned an executed copy of the oath or declaration.

The above-identified application and papers have been reviewed and found in compliance with 37 CFR 1.47(a). In view thereof, this application is hereby accorded Rule 1.47(a) status.

Thus, as provided in Rule 1.47c, this Office will forward notice of this application's filing to the non-signing inventor at the address given in the petition. Notice of the filing of this application will also be published in the Official Gazette.

The application is being forwarded to the Office of Patent Application Processing for further processing.

Telephone inquiries concerning this matter may be directed to the undersigned Petitions Attorney at (571) 272-3212.

Patricia Faison-Ball
Senior Petitions Attorney
Office of Petitions

Doc Code: PET.GREEN
Document Description: Petition for Green Tech Pilot

PTO/SB/420 (03-11)

PETITION TO MAKE SPECIAL UNDER THE GREEN TECHNOLOGY PILOT PROGRAM

Attorney Docket Number: Bailey-RPA2	Application Number (if known): 13/093,794	Filing date: 04/25/2011

First Named Inventor: Edward E. Bailey

Title: Multiple-tier Omnidirectional Solid-State Emission Source

APPLICANT HEREBY REQUESTS TO PARTICIPATE IN THE GREEN TECHNOLOGY PILOT PROGRAM FOR THE ABOVE-IDENTIFIED APPLICATION. See Instruction Sheet on page 2.

This petition must be timely filed electronically using the USPTO electronic filing system, EFS-Web.

1. By filing this petition:

   Applicant is requesting early publication: Applicant hereby requests early publication under 37 CFR 1.219 and the publication fee set forth in 37 CFR 1.18(d) accompanies this request.

2. By filing this petition: applicant is agreeing to make an election without traverse in a telephonic interview and elect an invention that meets the eligibility requirements for the Green Technology Pilot Program, if the Office determines that the claims are not obviously directed to a single invention. See Instruction Sheet.

3. This request is accompanied by statements of special status for the eligibility requirement.

4. The application contains no more than three (3) independent claims and twenty (20) total claims.

5. The application does not contain any multiple dependent claims.

6. Other attachments: None.

Signature /matthewtwelker/	Date 10/10/2011
Name (Print/Typed) Matthew T. Welker, Esq.	Registration Number 53,756

***Note**: Signatures of all the inventors or assignees of record of the entire interest or their representative(s) are required in accordance with 37 CFR 1.33 and 11.18. Please see 37 CFR 1.4(d) for the form of the signature. If necessary, submit multiple forms for more than one signature, see below*.*

■ *Total of one (1) forms are submitted.

If you need assistance in completing the form, call 1-800-PTO-9199 and select option 2.

Instruction Sheet for
Petition to Make Special Under the Green Technology Pilot Program
(Not to be Submitted to the USPTO)

The following is a summary of the requirements (for more information see the notices (i) "Pilot Program for Green Technologies Including Greenhouse Gas Reduction," (ii) "Elimination of Classification Requirement in the Green Technology Pilot Program," and (iii) "Expansion and Extension of the Green Technology Pilot Program," available on the USPTO web site at http://www.uspto.gov/patents/init_events/green_tech.jsp):

(1) The application must be a non-reissue, non-provisional utility application filed under 35 U.S.C. 111(a), or an international application that has entered the national stage in compliance with 35 U.S.C. 371, irrespective of the filing date of the application. Reexamination proceedings are excluded from this pilot program.

(2) The application must contain three or fewer independent claims and twenty or fewer total claims. The application must not contain any multiple dependent claims. For an application that contains more than three independent claims or twenty total claims, or multiple dependent claims, applicant must file a preliminary amendment in compliance with 37 CFR 1.121 to cancel the excess claims and/or the multiple dependent claims at the time the petition to make special is filed.

(3) The claims must be directed to a single invention that materially enhances the quality of the environment, or that materially contributes to: (1) the discovery or development of renewable energy resources; (2) the more efficient utilization and conservation of energy resources; or (3) green house gas emission reduction (see the eligibility requirements of sections II and III of the notice (i) cited above). The petition must include a statement that, if the USPTO determines that the claims are directed to multiple inventions (e.g., in a restriction requirement), applicant will agree to make an election without traverse in a telephonic interview, and elect an invention that meets the eligibility requirements in section II or III of the notice (i) cited above.

(4) The petition to make special must be timely filed electronically using the USPTO electronic filing system, EFS-Web, and selecting the document description of "Petition for Green Tech Pilot" on the EFS-Web screen. Applicant should use form PTO/SB/420, which is available as a Portable Document Format (PDF) fillable form in EFS-Web and on the USPTO Web site.

(5) The petition to make special must be filed at least one day prior to the date that a first Office action (which may be an Office action containing only a restriction requirement) appears in the Patent Application Information Retrieval (PAIR) system. Applicant may check the status of the application using PAIR.

(6) The petition to make special must be accompanied by a request for early publication in compliance with 37 CFR 1.219 and the publication fee set forth in 37 CFR 1.18(d).

Privacy Act Statement

The **Privacy Act of 1974 (P.L. 93-579)** requires that you be given certain information in connection with your submission of the attached form related to a patent application or patent. Accordingly, pursuant to the requirements of the Act, please be advised that: (1) the general authority for the collection of this information is 35 U.S.C. 2(b)(2); (2) furnishing of the information solicited is voluntary; and (3) the principal purpose for which the information is used by the U.S. Patent and Trademark Office is to process and/or examine your submission related to a patent application or patent. If you do not furnish the requested information, the U.S. Patent and Trademark Office may not be able to process and/or examine your submission, which may result in termination of proceedings or abandonment of the application or expiration of the patent.

The information provided by you in this form will be subject to the following routine uses:

1. The information on this form will be treated confidentially to the extent allowed under the Freedom of Information Act (5 U.S.C. 552) and the Privacy Act (5 U.S.C 552a). Records from this system of records may be disclosed to the Department of Justice to determine whether disclosure of these records is required by the Freedom of Information Act.
2. A record from this system of records may be disclosed, as a routine use, in the course of presenting evidence to a court, magistrate, or administrative tribunal, including disclosures to opposing counsel in the course of settlement negotiations.
3. A record in this system of records may be disclosed, as a routine use, to a Member of Congress submitting a request involving an individual, to whom the record pertains, when the individual has requested assistance from the Member with respect to the subject matter of the record.
4. A record in this system of records may be disclosed, as a routine use, to a contractor of the Agency having need for the information in order to perform a contract. Recipients of information shall be required to comply with the requirements of the Privacy Act of 1974, as amended, pursuant to 5 U.S.C. 552a(m).
5. A record related to an International Application filed under the Patent Cooperation Treaty in this system of records may be disclosed, as a routine use, to the International Bureau of the World Intellectual Property Organization, pursuant to the Patent Cooperation Treaty.
6. A record in this system of records may be disclosed, as a routine use, to another federal agency for purposes of National Security review (35 U.S.C. 181) and for review pursuant to the Atomic Energy Act (42 U.S.C. 218(c)).
7. A record from this system of records may be disclosed, as a routine use, to the Administrator, General Services, or his/her designee, during an inspection of records conducted by GSA as part of that agency's responsibility to recommend improvements in records management practices and programs, under authority of 44 U.S.C. 2904 and 2906. Such disclosure shall be made in accordance with the GSA regulations governing inspection of records for this purpose, and any other relevant (*i.e.*, GSA or Commerce) directive. Such disclosure shall not be used to make determinations about individuals.
8. A record from this system of records may be disclosed, as a routine use, to the public after either publication of the application pursuant to 35 U.S.C. 122(b) or issuance of a patent pursuant to 35 U.S.C. 151. Further, a record may be disclosed, subject to the limitations of 37 CFR 1.14, as a routine use, to the public if the record was filed in an application which became abandoned or in which the proceedings were terminated and which application is referenced by either a published application, an application open to public inspection or an issued patent.
9. A record from this system of records may be disclosed, as a routine use, to a Federal, State, or local law enforcement agency, if the USPTO becomes aware of a violation or potential violation of law or regulation.

DOCKET NO. Bailey-RPA2

IN THE UNITED STATES PATENT AND TRADEMARK OFFICE

In re application of: Edward E. Bailey
Serial No.: 13/093,794
Filed: 04/25/2011
For: Multiple-tier Omnidirectional Solid-State Emission Source

Art Unit: N/A
Examiner: N/A

Mail Stop Missing Parts
Commissioner of Patents
PO Box 1450
Arlington, VA 22313-1450

Statement of Special Status and Materiality Standard for the Eligibility Requirement for the PETITION TO MAKE SPECIAL UNDER THE GREEN TECHNOLOGY PILOT PROGRAM

Mail Stop Missing Parts
Commissioner of Patents
PO Box 1450
Arlington, VA 22313-1450

Sir/Madam:

This is in the statement on the materiality standard of the present invention with respect to the PETITION TO MAKE SPECIAL UNDER THE GREEN TECHNOLOGY PILOT PROGRAM.

Omni-directional light produced by a tent filament incandescent B-10 or vertical filament A-19 lamp produces light in all directions or greater than 325degrees full angle distribution in the vertical direction as well as 360 horizontally or in the azimuth direction. LED sources typically only produce light in a Lambertian beam pattern with maximum dispersion of 180degrees full distribution. The present invention efficiently disperses light greater than 325degrees, as required for standard decorative illumination.

The LED lighting of the present invention is five times more energy efficient than incandescent light bulbs. Applicant asserts that the present invention provides a means for energy conservation through the fives times reduction in electricity to run a light bulb, and that such a reduction in energy demand additionally results in a reduction of greenhouse gas due to reduced requirement for electricity to be produced. While both are a basis for the special status with respect to the PETITION TO MAKE SPECIAL UNDER THE GREEN TECHNOLOGY PILOT PROGRAM, applicant asserts specifically that the present invention is a form of energy conservation, which meets the materiality standard for granted the enclosed petition.

Respectfully submitted,

s/matthewtwelker/

MATTHEW T. WELKER, ESQ.
REGISTRATION NO. 53,756

Date: 10 October 2011
White-Welker & Welker, LLC
Customer No. 37,476
PO Box 199
Clear Spring, Maryland 21722
Ofc. 410.507.2837
Fax 301.842.1141

UNITED STATES PATENT AND TRADEMARK OFFICE

UNITED STATES DEPARTMENT OF COMMERCE
United States Patent and Trademark Office
Address: COMMISSIONER FOR PATENTS
P.O. Box 1450
Alexandria, Virginia 22313-1450
www.uspto.gov

APPLICATION NO.	FILING DATE	FIRST NAMED INVENTOR	ATTORNEY DOCKET NO.	CONFIRMATION NO.
13/093,794	04/25/2011	Edward E. Bailey	Bailey-RPA2	9373

37476 7590 10/26/2011

WHITE-WELKER & WELKER, LLC
P.O. BOX 199
CLEAR SPRING, MD 21722-0199

EXAMINER	
ART UNIT	PAPER NUMBER
2877	

MAIL DATE	DELIVERY MODE
10/26/2011	PAPER

Please find below and/or attached an Office communication concerning this application or proceeding.

The time period for reply, if any, is set in the attached communication.

UNITED STATES PATENT AND TRADEMARK OFFICE

Commissioner for Patents
United States Patent and Trademark Office
P.O. Box 1450
Alexandria, VA 22313-1450
www.uspto.gov

WHITE-WELKER & WELKER, LLC
P.O. BOX 199
CLEAR SPRING MD 21722-0199

In re Application of	:	
Edward E. BAILEY	:	DECISION ON PETITION
Application No. 13/093,794	:	TO MAKE SPECIAL UNDER
Filed: April 25, 2011	:	THE GREEN TECHNOLOGY
Attorney Docket No. Bailey-RPA2	:	PILOT PROGRAM

This is a decision on the petition under 37 CFR 1.102, filed on October 10, 2011, to make the above-identified application special under the pilot program for applications pertaining to Green Technologies as set forth 74 Federal Register Notice 64666 (December 8, 2009) and amended by 75 Federal Register Notice 28554 (May 21, 2010) and 75 Federal Register Notice 69049 (November 10, 2010).

The petition is **GRANTED**.

A grantable petition to make an application special under 37 CFR 1.102 and the pilot program as set forth in 74 FR 64666 must be directed to a nonprovisional application filed under 35 USC 111(a) or be a national stage entry under 35 USC 371, exclusive of any reissue applications.

In order to qualify for special status, the following requirements must be met. 1) The application must have no more than 3 independent claims and no more than 20 total claims. 2) The application must not contain any multiple dependent claims. 3) The petition must state the basis for seeking special status, i.e., the claimed invention either: A) materially enhances the quality of the environment or B) materially contributes to: i) the discovery or development of renewable energy resources, ii) the more efficient utilization and conservation of energy resources, or iii) greenhouse gas emission reduction. 4) If the disclosure is not clear on its face that the claimed invention materially contributes under category (A) or (B), the petition must be accompanied by a statement by the applicant, assignee, or an attorney/agent registered to practice before the Office explaining how the materiality standard is met. 5) A statement that applicant will agree to make an election without traverse in a telephonic interview if a restriction requirement is made by the examiner. 6) The petition to make special must be filed electronically. 7) The petition must be filed at least one day prior to the date that a first Office Action appears in the Patent Application Information Retrieval (PAIR) system. 8) The petition must be accompanied by a request for early publication in compliance with 37 CFR 1.219 and include the publication fee as set forth in 37 CFR 1.18(d).

The requirement for a fee for consideration of the petition to make special for applications pertaining to Green Technologies has been waived.

The instant petition complies with items 1 – 8 above. Accordingly, the above-identified application has been accorded "special" status.

Telephone inquiries concerning this decision should be directed to Lee W. Young at 571-272-4549.

The application is being forwarded to the Technology Center Art Unit 2877 for action on the merits commensurate with this decision.

Lee W. Young
Quality Assurance Specialist
Technology Center 2600

UNITED STATES PATENT AND TRADEMARK OFFICE

Commissioner for Patents
United States Patent and Trademark Office
P.O. Box 1450
Alexandria, VA 22313-1450
www.uspto.gov

PATTERSON & SHERIDAN, L.L.P.
3040 POST OAK BOULEVARD
SUITE 1500
HOUSTON TX 77056

MAILED

JUL 05 2011

OFFICE OF PETITIONS

In re Application of :
CHEN, et al :
Application No. 13/093,808 : NOTICE
Filed: April 25, 2011 :
Attorney Docket No. MIRA/0009.USC1 :

This is a notice regarding your request for acceptance of a fee deficiency submission under 37 CFR 1.28. On September 1, 1998, the Court of Appeals for the Federal Circuit held that 37 CFR 1.28(c) is the sole provision governing the time for correction of the erroneous payment of the issue fee as a small entity. **See DH Technology v. Synergystex International, Inc. 154 F.3d 1333, 47 USPQ2d 1865 (Fed. Cir. Sept. 1, 1998).**

The Office no longer investigates or rejects original or reissue applications under 37 CFR 1.56. **1098 Off. Gaz. Pat. Office 502 (January 3, 1989)**. Therefore, nothing in this Notice is intended to imply that an investigation was done.

Your fee deficiency submission under 37 CFR 1.28 is hereby **ACCEPTED**.

This application is no longer entitled to small entity status. Accordingly, all future fees paid in this application must be paid at the large entity rate.

Inquiries related to this communication should be directed to Diane Goodwyn at (571) 272-6735.

Thurman K. Page
Petitions Examiner
Office of Petitions

UNITED STATES PATENT AND TRADEMARK OFFICE

Commissioner for Patents
United States Patent and Trademark Office
P.O. Box 1450
Alexandria, VA 22313-1450
www.uspto.gov

In re Application of
Tzony Siegal

Application No. 13093883

Filed: April 26,2011

Attorney Docket No. 3201/42

:
:
:DECISION ON PETITION TO MAKE SPECIAL
:UNDER 37 CFR 1.102(c)(1)
:

This is a decision on the electronic petition under 37 CFR 1.102 (c)(1), filed 19-MAY-2011 to make the above-identified application special based on applicant's age as set forth in MPEP § 708.02, Section IV.

The petition is **GRANTED**.

A grantable petition to make an application special under 37 CFR 1.102(c)(1), MPEP § 708.02, Section IV: Applicant's Age must include a statement by applicant or a registered practitioner having evidence that applicant is at least 65 years of age. No fee is required.

Accordingly, the above-identified application has been accorded "special" status and will be taken up for action by the examiner upon the completion of all pre-examination processing.

Telephone inquiries concerning this electronic decision should be directed to the Electronic Business Center at 866-217-9197.

All other inquiries concerning either the examination or status of the application should be directed to the Technology Center.

Doc code : PET.OP.AGE
Description : Petition to make special based on Age/Health

PTO/SB/130 (07-09)
Approved for use through 07/31/2012. OMB 0651- 0031
U.S. Patent and Trademark Office; U.S. DEPARTMENT OF COMMERCE
Under the Paperwork Reduction Act of 1995, no persons are required to respond to a collection of information unless it contains a valid OMB control number

PETITION TO MAKE SPECIAL BASED ON AGE FOR ADVANCEMENT OF EXAMINATION UNDER 37 CFR 1.102(c)(1)

Application Information

Application Number	13093883	Confirmation Number	9553	Filing Date	2011-04-26
Attorney Docket Number (optional)	3201/42	Art Unit		Examiner	
First Named Inventor	Tzony Siegal				
Title of Invention	DEVICES FOR INTRODUCTION INTO A BODY VIA A SUBSTANTIALLY STRAIGHT CONDUIT TO FORM A PREDEFINED CURVED CONFIGURATION, AND METHODS EMPLOYING SUCH DEVICES				

Attention: Office of Petitions

An application may be made special for advancement of examination upon filing of a petition showing that the applicant is 65 years of age, or more. No fee is required with such a petition. See 37 CFR 1.102(c)(1) and MPEP 708.02 (IV).

APPLICANT HEREBY PETITIONS TO MAKE SPECIAL FOR ADVANCEMENT OF EXAMINATION IN THIS APPLICATION UNDER 37 CFR 1.102(c)(1) and MPEP 708.02 (IV) ON THE BASIS OF THE APPLICANT'S AGE.

A grantable petition requires one of the following items:
(1) Statement by one named inventor in the application that he/she is 65 years of age, or more; or
(2) Certification by a registered attorney/agent having evidence such as a birth certificate, passport, driver's license, etc. showing one named inventor in the application is 65 years of age, or more.

Name of Inventor who is 65 years of age, or older

Given Name	Middle Name	Family Name	Suffix
Tzony		Siegal	

A signature of the applicant or representative is required in accordance with 37 CFR 1.33 and 10.18. Please see 37 CFR 1.4(d) for the format of the signature.

Select (1) or (2) :

○ (1) I am an inventor in this application and I am 65 years of age, or more.

◉ (2) I am an attorney or agent registered to practice before the Patent and Trademark Office, and I certify that I am in possession of evidence, and will retain such in the application file record, showing that the inventor listed above is 65 years of age, or more.

Signature	/MMF/	Date (YYYY-MM-DD)	2011-04-28
Name	Mark Friedman	Registration Number	33883

PTO/SB/130 (07-09)
Approved for use through 07/31/2012. OMB 0651- 0031
U.S. Patent and Trademark Office; U.S. DEPARTMENT OF COMMERCE
Under the Paperwork Reduction Act of 1995, no persons are required to respond to a collection of information unless it contains a valid OMB control number

Privacy Act Statement

The Privacy Act of 1974 (P.L. 93-579) requires that you be given certain information in connection with your submission of the attached form related to a patent application or patent. Accordingly, pursuant to the requirements of the Act, please be advised that: (1) the general authority for the collection of this information is 35 U.S.C. 2(b)(2); (2) furnishing of the information solicited is voluntary; and (3) the principal purpose for which the information is used by the U.S. Patent and Trademark Office is to process and/or examine your submission related to a patent application or patent. If you do not furnish the requested information, the U.S. Patent and Trademark Office may not be able to process and/or examine your submission, which may result in termination of proceedings or abandonment of the application or expiration of the patent.

The information provided by you in this form will be subject to the following routine uses:

1. The information on this form will be treated confidentially to the extent allowed under the Freedom of Information Act (5 U.S.C. 552) and the Privacy Act (5 U.S.C. 552a). Records from this system of records may be disclosed to the Department of Justice to determine whether the Fr eedom of Information Act requires disclosure of these records.

2. A record from this system of records may be disclosed, as a routine use, in the course of presenting evidence to a court, magistrate, or administrative tribunal, including disclosures to opposing counsel in the course of settlement negotiations.

3. A record in this system of records may be disclosed, as a routine use, to a Member of Congress submitting a request involving an individual, to whom the record pertains, when the individual has requested assistance from the Member with respect to the subject matter of the record.

4. A record in this system of records may be disclosed, as a routine use, to a contractor of the Agency having need for the information in order to perform a contract. Recipients of information shall be required to comply with the requirements of the Privacy Act of 1974, as amended, pursuant to 5 U.S.C. 552a(m).

5. A record related to an International Application filed under the Patent Cooperation Treaty in this system of records may be disclosed, as a routine use, to the International Bureau of the World Intellectual Property Organization, pursuant to the Patent Cooperation Treaty.

6. A record in this system of records may be disclosed, as a routine use, to another federal agency for purposes of National Security review (35 U.S.C. 181) and for review pursuant to the Atomic Energy Act (42 U.S.C. 218(c)).

7. A record from this system of records may be disclosed, as a routine use, to the Administrator, General Services, or his/her designee, during an inspection of records conducted by GSA as part of that agency's responsibility to recommend improvements in records management practices and programs, under authority of 44 U.S.C. 2904 and 2906. Such disclosure shall be made in accordance with the GSA regulations governing inspection of records for this purpose, and any other relevant (i.e., GSA or Commerce) directive. Such disclosure shall not be used to make determinations about indivi duals.

8. A record from this system of records may be disclosed, as a routine use, to the public after either publication of the application pursuant to 35 U.S.C. 122(b) or issuance of a patent pursuant to 35 U.S.C. 151. Further, a record may be disclosed, subject to the limitations of 37 CFR 1.14, as a routine use, to the public if the record was filed in an application which became abandoned or in which the proceedings were terminated and which application is referenced by either a published application, an application open to public inspections or an issued patent.

9. A record from this system of records may be disclosed, as a routine use, to a Federal, State, or local law enforcement agency, if the USPTO becomes aware of a violation or potential violation of law or regulation.

Doc code : PET.OP.AGE
Description : Petition to make special based on Age/Health

PTO/SB/130 (07-09)
Approved for use through 07/31/2012. OMB 0651- 0031
U.S. Patent and Trademark Office; U.S. DEPARTMENT OF COMMERCE
Under the Paperwork Reduction Act of 1995, no persons are required to respond to a collection of information unless it contains a valid OMB control number

PETITION TO MAKE SPECIAL BASED ON AGE FOR ADVANCEMENT OF EXAMINATION UNDER 37 CFR 1.102(c)(1)

Application Information

Application Number	13093889	Confirmation Number	9566	Filing Date	2011-04-26
Attorney Docket Number (optional)	3201/44	Art Unit		Examiner	
First Named Inventor	Tzony Siegal				
Title of Invention	DEVICES FOR INTRODUCTION INTO A BODY VIA A SUBSTANTIALLY STRAIGHT CONDUIT TO FORM A PREDEFINED CURVED CONFIGURATION, AND METHODS EMPLOYING SUCH DEVICES				

Attention: Office of Petitions

An application may be made special for advancement of examination upon filing of a petition showing that the applicant is 65 years of age, or more. No fee is required with such a petition. See 37 CFR 1.102(c)(1) and MPEP 708.02 (IV).

APPLICANT HEREBY PETITIONS TO MAKE SPECIAL FOR ADVANCEMENT OF EXAMINATION IN THIS APPLICATION UNDER 37 CFR 1.102(c)(1) and MPEP 708.02 (IV) ON THE BASIS OF THE APPLICANT'S AGE.

A grantable petition requires one of the following items:
(1) Statement by one named inventor in the application that he/she is 65 years of age, or more; or
(2) Certification by a registered attorney/agent having evidence such as a birth certificate, passport, driver's license, etc. showing one named inventor in the application is 65 years of age, or more.

Name of Inventor who is 65 years of age, or older

Given Name	Middle Name	Family Name	Suffix
Tzony		Siegal	

A signature of the applicant or representative is required in accordance with 37 CFR 1.33 and 10.18. Please see 37 CFR 1.4(d) for the format of the signature.

Select (1) or (2) :

○ (1) I am an inventor in this application and I am 65 years of age, or more.

● (2) I am an attorney or agent registered to practice before the Patent and Trademark Office, and I certify that I am in possession of evidence, and will retain such in the application file record, showing that the inventor listed above is 65 years of age, or more.

Signature	/MMF/	Date (YYYY-MM-DD)	2011-04-28
Name	Mark Friedman	Registration Number	33883

PTO/SB/130 (07-09)
Approved for use through 07/31/2012. OMB 0651- 0031
U.S. Patent and Trademark Office; U.S. DEPARTMENT OF COMMERCE
Under the Paperwork Reduction Act of 1995, no persons are required to respond to a collection of information unless it contains a valid OMB control number

Privacy Act Statement

The Privacy Act of 1974 (P.L. 93-579) requires that you be given certain information in connection with your submission of the attached form related to a patent application or patent. Accordingly, pursuant to the requirements of the Act, please be advised that: (1) the general authority for the collection of this information is 35 U.S.C. 2(b)(2); (2) furnishing of the information solicited is voluntary; and (3) the principal purpose for which the information is used by the U.S. Patent and Trademark Office is to process and/or examine your submission related to a patent application or patent. If you do not furnish the requested information, the U.S. Patent and Trademark Office may not be able to process and/or examine your submission, which may result in termination of proceedings or abandonment of the application or expiration of the patent.

The information provided by you in this form will be subject to the following routine uses:

1. The information on this form will be treated confidentially to the extent allowed under the Freedom of Information Act (5 U.S.C. 552) and the Privacy Act (5 U.S.C. 552a). Records from this system of records may be disclosed to the Department of Justice to determine whether the Fr eedom of Information Act requires disclosure of these records.

2. A record from this system of records may be disclosed, as a routine use, in the course of presenting evidence to a court, magistrate, or administrative tribunal, including disclosures to opposing counsel in the course of settlement negotiations.

3. A record in this system of records may be disclosed, as a routine use, to a Member of Congress submitting a request involving an individual, to whom the record pertains, when the individual has requested assistance from the Member with respect to the subject matter of the record.

4. A record in this system of records may be disclosed, as a routine use, to a contractor of the Agency having need for the information in order to perform a contract. Recipients of information shall be required to comply with the requirements of the Privacy Act of 1974, as amended, pursuant to 5 U.S.C. 552a(m).

5. A record related to an International Application filed under the Patent Cooperation Treaty in this system of records may be disclosed, as a routine use, to the International Bureau of the World Intellectual Property Organization, pursuant to the Patent Cooperation Treaty.

6. A record in this system of records may be disclosed, as a routine use, to another federal agency for purposes of National Security review (35 U.S.C. 181) and for review pursuant to the Atomic Energy Act (42 U.S.C. 218(c)).

7. A record from this system of records may be disclosed, as a routine use, to the Administrator, General Services, or his/her designee, during an inspection of records conducted by GSA as part of that agency's responsibility to recommend improvements in records management practices and programs, under authority of 44 U.S.C. 2904 and 2906. Such disclosure shall be made in accordance with the GSA regulations governing inspection of records for this purpose, and any other relevant (i.e., GSA or Commerce) directive. Such disclosure shall not be used to make determinations about indivi duals.

8. A record from this system of records may be disclosed, as a routine use, to the public after either publication of the application pursuant to 35 U.S.C. 122(b) or issuance of a patent pursuant to 35 U.S.C. 151. Further, a record may be disclosed, subject to the limitations of 37 CFR 1.14, as a routine use, to the public if the record was filed in an application which became abandoned or in which the proceedings were terminated and which application is referenced by either a published application, an application open to public inspections or an issued patent.

9. A record from this system of records may be disclosed, as a routine use, to a Federal, State, or local law enforcement agency, if the USPTO becomes aware of a violation or potential violation of law or regulation.

UNITED STATES PATENT AND TRADEMARK OFFICE

Commissioner for Patents
United States Patent and Trademark Office
P.O. Box 1450
Alexandria, VA 22313-1450
www.uspto.gov

In re Application of
Tzony Siegal

Application No. 13093889

Filed: April 26,2011

Attorney Docket No. 3201/44

:
:
:DECISION ON PETITION TO MAKE SPECIAL
:UNDER 37 CFR 1.102(c)(1)
:

This is a decision on the electronic petition under 37 CFR 1.102 (c)(1), filed 19-MAY-2011 to make the above-identified application special based on applicant's age as set forth in MPEP § 708.02, Section IV.

The petition is **GRANTED**.

A grantable petition to make an application special under 37 CFR 1.102(c)(1), MPEP § 708.02, Section IV: Applicant's Age must include a statement by applicant or a registered practitioner having evidence that applicant is at least 65 years of age. No fee is required.

Accordingly, the above-identified application has been accorded "special" status and will be taken up for action by the examiner upon the completion of all pre-examination processing.

Telephone inquiries concerning this electronic decision should be directed to the Electronic Business Center at 866-217-9197.

All other inquiries concerning either the examination or status of the application should be directed to the Technology Center.

UNITED STATES PATENT AND TRADEMARK OFFICE

UNITED STATES DEPARTMENT OF COMMERCE
United States Patent and Trademark Office
Address: COMMISSIONER FOR PATENTS
P.O. Box 1450
Alexandria, Virginia 22313-1450
www.uspto.gov

APPLICATION NO.	FILING DATE	FIRST NAMED INVENTOR	ATTORNEY DOCKET NO.	CONFIRMATION NO.
13/093,891	04/26/2011	Bastian Lewke	2010P07249US	9570

22116 7590 06/02/2011

SIEMENS CORPORATION
INTELLECTUAL PROPERTY DEPARTMENT
170 WOOD AVENUE SOUTH
ISELIN, NJ 08830

EXAMINER	
ART UNIT	PAPER NUMBER
2839	

MAIL DATE	DELIVERY MODE
06/02/2011	PAPER

Please find below and/or attached an Office communication concerning this application or proceeding.

The time period for reply, if any, is set in the attached communication.

UNITED STATES PATENT AND TRADEMARK OFFICE

Commissioner for Patents
United States Patent and Trademark Office
P.O. Box 1450
Alexandria, VA 22313-1450
www.uspto.gov

SIEMENS CORPORATION
INTELLECTUAL PROPERTY DEPARTMENT
170 WOOD AVENUE SOUTH
ISELIN NJ 08830

In re Application of
Bastian LEWKE
Application No.: 13/093,891
Filed: 26 April 2011
Attorney Docket No.: 2010P07249US
For: ARRANGEMENT TO DETECT A FAULT ELECTRICAL CONNECTION

: DECISION ON REQUEST TO
: PARTICIPATE IN THE PATENT
: PROSECUTION HIGHWAY PILOT
: PROGRAM AND PETITION
: TO MAKE SPECIAL UNDER
: 37 CFR 1.102(a)

This is a decision on the request to participate in the Patent Prosecution Highway (PPH) pilot program and the petition under 37 CFR 1.102(a), filed 27 April 2011, to make the above-identified application special.

The request and petition are **GRANTED**.

Discussion

A grantable request to participate in the PPH pilot program and petition to make special require:

(1) The U.S. application must validly claim priority under 35 U.S.C. 119(a) to one or more applications filed in the EPO;

(2) Applicant must submit a copy of the allowable/patentable claim(s) from the EPO application(s) along with an English translation thereof and a statement that the English translation is accurate;

(3) All the claims in the U.S. application must sufficiently correspond or be amended to sufficiently correspond to the allowable/patentable claim(s) in the EPO application(s);

(4) Examination of the U.S. application has not begun;

(5) Applicant must submit a copy of all the office actions from each of the EPO application(s) containing the allowable/patentable claim(s) along with an English translation thereof and a statement that the English translation is accurate;

(6) Applicant must submit an IDS listing the documents cited by the EPO examiner in the EPO office action along with copies of documents except U.S. patents or U.S. patent application publications; and

The request to participate in the PPH pilot program and petition comply with the above requirements. Accordingly, the above-identified application has been accorded "special" status.

Inquiries concerning this decision should be directed to Lee W. Young at 571-272-4549.

All other inquiries concerning the examination or status of the application is accessible in the PAIR system at http://www.uspto.gov/ebc.index.html.

This application will be forwarded to the examiner for action on the merits commensurate with this decision once this application's formality reviews have been completed.

Lee W. Young
TQAS, Technology Center 2800 – Semiconductors
Electrical & Optical Systems & Components

UNITED STATES PATENT AND TRADEMARK OFFICE

Commissioner for Patents
United States Patent and Trademark Office
P.O. Box 1450
Alexandria, VA 22313-1450
www.uspto.gov

MICHAUD-KINNEY GROUP LLP
306 INDUSTRIAL PARK ROAD
SUITE 206
MIDDLETOWN, CT 06457

MAILED

JUN 08 2011

OFFICE OF PETITIONS

In re Application of :
Hollander et al. :
Application No. 13/093,977 : ON PETITION
Filed: April 26, 2011 :
Attorney Docket No. 1315-0014-1 :

This is a decision on the petition under 37 CFR 1.102(c)(1), filed April 26, 2011, to make the above-identified application special based on applicant's age as set forth in M.P.E.P. § 708.02, Section IV.

The petition is **GRANTED**.

A grantable petition to make an application special under 37 CFR 1.102(c)(1) and MPEP § 708.02, Section IV: Applicant's Age must be accompanied by evidence showing that at least one of the applicants is 65 years of age, or more, such as a birth certificate or a statement by applicant. No fee is required.

The instant petition includes a statement (PTO/SB/130 form) by the applicant's attorney that the applicant is 65 years of age or more. Accordingly, the above-identified application has been accorded "special" status.

Telephone inquiries concerning this decision should be directed to the undersigned at 571-272-6059. All other inquiries concerning either the examination or status of the application should be directed to the Technology Center.

This matter is being referred to the Technology Center Art Unit 1726 for action on the merits commensurate with this decision.

A. Kelley-Collier

Alicia Kelley-Collier
Petitions Examiner
Office of Petitions

UNITED STATES PATENT AND TRADEMARK OFFICE

UNITED STATES DEPARTMENT OF COMMERCE
United States Patent and Trademark Office
Address: COMMISSIONER FOR PATENTS
P.O. Box 1450
Alexandria, Virginia 22313-1450
www.uspto.gov

APPLICATION NO.	FILING DATE	FIRST NAMED INVENTOR	ATTORNEY DOCKET NO.	CONFIRMATION NO.
13/094,036	04/26/2011	Eriko Maeda	MNL-2635-1007	9862

7590 11/18/2011

NIXON & VANDERHYE, PC
901 NORTH GLEBE ROAD, 11TH FLOOR
ARLINGTON, VA 22203

EXAMINER	
ART UNIT	PAPER NUMBER
2856	
MAIL DATE	DELIVERY MODE
11/18/2011	PAPER

DECISION GRANTING PETITION UNDER 37 CFR 1.138(d)

The declaration of express abandonment is recognized

This is in response to the petition under 37 CFR 1.138(d), requesting for a refund of any previously paid search fee and excess claims fee in the above-identified application.

The petition is granted.

The express abandonment is recognized. Any previously paid search fee and excess claims fee are hereby refunded.

Telephone inquiries should be directed to the Office of Data Management at (571) 272-4200.

Patent Publication Branch
Office of Data Management

UNITED STATES PATENT AND TRADEMARK OFFICE

UNITED STATES DEPARTMENT OF COMMERCE
United States Patent and Trademark Office
Address: COMMISSIONER FOR PATENTS
P.O. Box 1450
Alexandria, Virginia 22313-1450
www.uspto.gov

APPLICATION NO.	FILING DATE	FIRST NAMED INVENTOR	ATTORNEY DOCKET NO.	CONFIRMATION NO.
13/094,059	04/26/2011	Min Soo NOH	Q124301	9912

23373 7590 07/21/2011

SUGHRUE MION, PLLC
2100 PENNSYLVANIA AVENUE, N.W.
SUITE 800
WASHINGTON, DC 20037

EXAMINER	
POHNERT, STEVEN C	
ART UNIT	PAPER NUMBER
1634	

NOTIFICATION DATE	DELIVERY MODE
07/21/2011	ELECTRONIC

Please find below and/or attached an Office communication concerning this application or proceeding.

The time period for reply, if any, is set in the attached communication.

Notice of the Office communication was sent electronically on above-indicated "Notification Date" to the following e-mail address(es):

sughrue@sughrue.com
PPROCESSING@SUGHRUE.COM
USPTO@SUGHRUE.COM

UNITED STATES PATENT AND TRADEMARK OFFICE

Commissioner for Patents
United States Patent and Trademark Office
P.O. Box 1450
Alexandria, VA 22313-1450
www.uspto.gov

JUL 21 2011

SUGHRUE MION, PLLC
2100 PENNSYLVANIA AVENUE, N.W. SUITE 800
WASHINGTON, DC 20037

In re Application of	:	DECISION ON REQUEST TO
NOH ET AL.	:	PARTICIPATE IN PATENT
Application No. 13/094,059	:	PROSECUTION HIGHWAY
Filed: April 26, 2011	:	PROGRAM AND PETITION
Attorney Docket No. Q124301	:	TO MAKE SPECIAL UNDER
	:	37 CFR 1.102(a)

This is a decision on the request to participate in the Patent Prosecution Highway (PPH) program and the petition under 37 CFR 1.102(a), filed April 29, 2011, to make the above-identified application special.

The request and petition are **GRANTED**.

A grantable request to participate in the PPH program and petition to make special require:

(1) The U.S. application is (a) a Paris Convention application which either (i) validly claims priority under 35 U.S.C. 119(a) and 37 CFR 1.55 to one or more applications filed with KIPO, or (ii) validly claims priority under 35 U.S.C. 119(a)/365(a) to a PCT application that contains no priority claims, or (b) a national stage application under the PCT (an application which entered the national stage in the U.S. from a PCT international application after compliance with 35 U.S.C. 371), which PCT application (i) validly claims priority under 35 U.S.C. 365(b) to an application filed with KIPO, or (ii) validly claims priority under 35 U.S.C. 365(b) to a PCT application that contains no priority claims, or (iii) contains no priority claim, or (c) a so-called bypass application filed under 35 U.S.C. 111(a) which validly claims benefit under 35 U.S.C. 120 to a PCT application, which PCT application (i) validly claims priority under 35 U.S.C. 365(b) to an application filed with KIPO, or (ii) validly claims priority under 35 U.S.C. 365(b) to a PCT application that contains no priority claims, or (iii) contains no priority claim;
(2) The KIPO application(s) has at least one claim that was determined by KIPO to be allowable;
(3) All the claims in each U.S. application for which a request for participation in the PPH pilot program is made must sufficiently correspond or be amended to sufficiently correspond to the allowable claims in the KIPO application(s);
(4) Examination of the U.S. application has not begun;
(5) Applicant must submit a copy of all the office actions (which are relevant to patentability) from each of the KIPO application(s) containing the allowable claims that are the basis for the request;
(6) Applicant must submit a copy of the allowable claims from the KIPO application(s);
(7) Applicant must submit a claim correspondence table; and

(8) Applicant must submit an information disclosure statement (IDS) listing the documents cited by the KIPO examiner in the KIPO office action (unless such an IDS has already been filed in the U.S. application).

The request to participate in the PPH program and petition comply with the above requirements. Accordingly, the above-identified application has been accorded "special" status.

Telephone inquiries concerning this decision should be directed to Cecilia Tsang at 571-272-0562.

All other inquiries concerning the examination or status of the application should be directed to Patent Application Information Retrieval (PAIR) system at the http://www.uspto.gov/ebc/index.html.

The application is being forwarded to the examiner for action on the merits commensurate with this decision.

Cecilia Tsang
Supervisory Patent Examiner
TC 1600

Doc Code: PET.GREEN
Document Description: Petition for Green Tech Pilot

PTO/SB/420 (03-11)

PETITION TO MAKE SPECIAL UNDER THE GREEN TECHNOLOGY PILOT PROGRAM

Attorney Docket Number: 245310	Application Number (if known): 13/094,215	Filing date: April 26, 2011

First Named Inventor: Jeffrey Michael Daniels

Title: SYSTEM FOR ACTIVELY MONITORING WEAR ON WIND TURBINE BRAKE PADS AND RELATED METHODS

APPLICANT HEREBY REQUESTS TO PARTICIPATE IN THE GREEN TECHNOLOGY PILOT PROGRAM FOR THE ABOVE-IDENTIFIED APPLICATION. See Instruction Sheet on page 2.

This petition must be timely filed electronically using the USPTO electronic filing system, EFS-Web.

1. By filing this petition:

   Applicant is requesting early publication: Applicant hereby requests early publication under 37 CFR 1.219 and the publication fee set forth in 37 CFR 1.18(d) accompanies this request.

2. By filing this petition: applicant is agreeing to make an election without traverse in a telephonic interview and elect an invention that meets the eligibility requirements for the Green Technology Pilot Program, if the Office determines that the claims are not obviously directed to a single invention. See Instruction Sheet.

3. This request is accompanied by statements of special status for the eligibility requirement.

4. The application contains no more than three (3) independent claims and twenty (20) total claims.

5. The application does not contain any multiple dependent claims.

6. Other attachments: Statement Concerning the Basis for the Special Status

Signature /Allison W. Mages/	Date October 10, 2011
Name (Print/Typed) Allison W. Mages	Registration Number 57,275

Note: Signatures of all the inventors or assignees of record of the entire interest or their representative(s) are required in accordance with 37 CFR 1.33 and 11.18. Please see 37 CFR 1.4(d) for the form of the signature. If necessary, submit multiple forms for more than one signature, see below.*

☐ *Total of _____ forms are submitted.

If you need assistance in completing the form, call 1-800-PTO-9199 and select option 2.

IN THE UNITED STATES PATENT AND TRADEMARK OFFICE

First Named Inventor: Jeffrey Michael Daniels	)
Confirmation No.: 1196	)
	)
Serial No.: 13/094,215	)
	)
Filing Date: April 26, 2011	)
	)
Atty Docket No.: 245310	)

VIA EFS
Commissioner for Patents
P.O. Box 1450
Alexandria, VA 22313-1450

Statement Concerning the Basis for the Special Status

SIR:

The present application relates generally to braking systems for wind turbines and, more particularly, to a system and method for actively monitoring wear on a brake pad of a wind turbine. (See [0001]).

Current brake pad inspection methods require that a maintenance worker climb the wind turbine and either perform manual measurements of the brake pads or dissemble the brake assemblies to allow for visual inspection of the brake pads. Unfortunately, this inspection method is very expensive and time consuming. Additionally, since the inspection method requires that the wind turbine be shutdown, such inspections are typically performed only at normal maintenance intervals. Thus, wear issues occurring between the maintenance intervals go unnoticed, which can lead to significant damage to the wind turbine brake system. (See [0004]).

Applicant respectfully submits that Special Status is sought on the basis that the present invention materially contributes to the discovery or development of renewable energy resources.

The undersigned representative may be contacted at the number below to facilitate the resolution of any matters. Please charge any fees that are incurred in connection with this Statement to deposit account no. 09-0470.

Respectfully submitted,

General Electric Company

By : /Allison W. Mages/
Allison W. Mages
Reg. No. 57,275

Dated: October 10, 2011

GE Global Patent Operation
2 Corporate Drive, Suite 648
Shelton, CT 06484
203-944-6730

IN THE UNITED STATES PATENT AND TRADEMARK OFFICE

First Named Inventor: Bharat BAGEPALLI	)
Confirmation No.: 1237	)
	)
Serial No.: 13/094,237	)
	)
Filing Date: 04-26-2011	)
	)
Atty Docket No.: 234162-1 (GEC-282)	)

VIA EFS
Commissioner for Patents
P.O. Box 1450
Alexandria, VA 22313-1450

Statement Concerning the Basis for the Special Status

SIR:

The present invention relates generally to wind turbines and, more particularly, to a blade configuration for wind turbines. (See [0001]).

Turbine blades are the primary elements of wind turbines for converting wind energy into electrical energy. The blades have a cross-sectional profile of an airfoil such that, during operation, air flows over the blade producing a pressure difference between the sides. Consequently, a lift force, which is directed from a pressure side towards a suction side, acts on the blade. The lift force generates torque on the main rotor shaft, which is geared to a generator for producing electricity. (See [0002]).

Modern wind turbines can be quite large, with many designs having a rotor hub height exceeding 100 meters, and rotor diameters in excess of 80 meters. The blades have a root section mounted to a rotor hub, with the aerodynamic shape of the blades defined radially outboard of the root section. This

configuration results in a central "dead" wind zone that is coaxial to the rotor hub, wherein virtually no energy is extracted from the wind by the blades. This dead zone can have up to, for example, a 5 meter radius. (See [0003]).

Wind power is considered one of the cleanest, most environmentally friendly energy sources presently available, and wind turbines have gained increased attention and importance in this regard. However, the cost/benefit economics of wind energy is a constant consideration. The cost of producing the energy cannot outweigh the benefits. In this regard, the industry would benefit from improvements or advancements in wind turbine design and operation that would utilize the energy from the central dead wind zone to increase the output of the wind turbine. (See [0004]).

In accordance with aspects of the invention, a wind turbine is provided with a tower, and a nacelle mounted atop the tower. Power generating components are housed within the nacelle, and a rotor hub is rotationally coupled to the power generating components, for example via a shaft. A plurality of blades are fixed to the rotor hub, with the blades having a root section extending radially outward from the rotor hub and an aerodynamic section extending radially outward from the root section, wherein lift is generated by the blades primarily along the aerodynamic section. Aerodynamic fins extend radially outward from the rotor hub alongside of the root sections of the blades. For example, the fins may extend radially between the root sections of the blades or may be aligned with the blades. The fins have an aerodynamic shape so as to capture wind and impart rotational torque to the hub from a central impinging

wind zone that is coaxial to the rotor hub and generally coincident with the blade root sections. (See [0006]).

In some embodiments, the fins may have various aerodynamic shapes. For example, the fins may have an airfoil shape similar to the turbine blades. In another embodiment, the fins may have a flat, broad, pinwheel shape. And the fins may extend radially to any position, including up to the aerodynamic sections of the blades. (See [0007]).

And in some embodiments, the fins may be variously configured relative to the rotor hub. For example, the rotor hub may include a base and a nose cone mounted over the base, with the blades mounted to the base. In one such embodiment, the fins are mounted to the nose cone, which may have individual segments with a respective fin mounted to each segment. In another such embodiment, the fins may be mounted to the base and extend through the nose cone. In still a further embodiment, the fins may be mounted to the root section of a respective blade generally adjacent to the base. (See [0008]).

The present invention also encompasses various method embodiments for improving the efficiency of any manner of erected wind turbine by attaching aerodynamic fins in a fixed relationship relative to the rotor hub. The fins extend radially outward from the rotor hub alongside of the root sections of the blades, and have an aerodynamic shape so as to capture energy from the wind "dead zone" and impart rotational torque to the rotor hub. The methods may be performed as a retrofit procedure to existing wind turbines at a wind turbine site. (See [0009], [0010]).

Accordingly, Applicant respectfully submits that Special Status is sought on the basis that the present invention materially contributes to the discovery or development of renewable energy resources.

The undersigned representative may be contacted at the number below to facilitate the resolution of any matters. Please charge any fees that are incurred in connection with this Statement to deposit account no. 09-0470.

Respectfully submitted,

General Electric Company

By : /Allison W. Mages/
Allison W. Mages
Reg. No. 57,275

Dated: November 9, 2011

GE Global Patent Operation
2 Corporate Drive, Suite 648
Shelton, CT 06484
203-944-6730

Doc Code: PET.GREEN
Document Description: Petition for Green Tech Pilot

PTO/SB/420 (03-11)

PETITION TO MAKE SPECIAL UNDER THE GREEN TECHNOLOGY PILOT PROGRAM

Attorney Docket Number: 234162-1 (GEC-282)	Application Number (if known): 13/094,237	Filing date: 04-26-2011

First Named Inventor: Bharat BAGEPALLI

Title: WIND TURBINE WITH AUXILIARY FINS

APPLICANT HEREBY REQUESTS TO PARTICIPATE IN THE GREEN TECHNOLOGY PILOT PROGRAM FOR THE ABOVE-IDENTIFIED APPLICATION. See Instruction Sheet on page 2.

This petition must be timely filed electronically using the USPTO electronic filing system, EFS-Web.

1. By filing this petition:

   Applicant is requesting early publication: Applicant hereby requests early publication under 37 CFR 1.219 and the publication fee set forth in 37 CFR 1.18(d) accompanies this request.

2. By filing this petition: applicant is agreeing to make an election without traverse in a telephonic interview and elect an invention that meets the eligibility requirements for the Green Technology Pilot Program, if the Office determines that the claims are not obviously directed to a single invention. See Instruction Sheet.

3. This request is accompanied by statements of special status for the eligibility requirement.

4. The application contains no more than three (3) independent claims and twenty (20) total claims.

5. The application does not contain any multiple dependent claims.

6. Other attachments: Statement Concerning the Basis for the Special Status

Signature /Allison W. Mages/	Date November 9, 2011
Name (Print/Typed) Allison W. Mages	Registration Number 57,275

Note: Signatures of all the inventors or assignees of record of the entire interest or their representative(s) are required in accordance with 37 CFR 1.33 and 11.18. Please see 37 CFR 1.4(d) for the form of the signature. If necessary, submit multiple forms for more than one signature, see below.*

☐ *Total of _____ forms are submitted.

If you need assistance in completing the form, call 1-800-PTO-9199 and select option 2.

UNITED STATES PATENT AND TRADEMARK OFFICE

UNITED STATES DEPARTMENT OF COMMERCE
United States Patent and Trademark Office
Address: COMMISSIONER FOR PATENTS
P.O. Box 1450
Alexandria, Virginia 22313-1450
www.uspto.gov

APPLICATION NO.	FILING DATE	FIRST NAMED INVENTOR	ATTORNEY DOCKET NO.	CONFIRMATION NO.
13/094,237	04/26/2011	Bharat Bagepalli	234162/GEC-282	1237

99491 7590 12/07/2011

Dority and Manning, P.A and General
Electric-Appliance and Lighting
PO Box 1449
greenville, SC 29602

EXAMINER	
ART UNIT	PAPER NUMBER
3745	

MAIL DATE	DELIVERY MODE
12/07/2011	PAPER

Please find below and/or attached an Office communication concerning this application or proceeding.

The time period for reply, if any, is set in the attached communication.

UNITED STATES PATENT AND TRADEMARK OFFICE

Commissioner for Patents
United States Patent and Trademark Office
P.O. Box 1450
Alexandria, VA 22313-1450
www.uspto.gov

Dority and Manning, P.A and General
Electric-Appliance and Lighting
PO Box 1449
Greenville SC 29602

In re Application of		
BAGEPALLI, BHARAT et al	:	DECISION ON PETITION
Application No. 13/094,237	:	TO MAKE SPECIAL UNDER
Filed: April 26, 2011	:	THE GREEN TECHNOLOGY
Attorney Docket No. 234162/GEC-282	:	PILOT PROGRAM

This is a decision on the petition under 37 CFR 1.102, filed November 9, 2011, to make the above-identified application special under the pilot program for applications pertaining to Green Technologies as set forth in 74 Federal Register Notice 64666 (December 8, 2009) and amended by 75 Federal Register Notice 28554 (May 21, 2010) and 75 Federal Register Notice 69049 (November 10, 2010).

The petition is **granted**.

A grantable petition to make an application special under 37 CFR 1.102 and the pilot program as set forth in 74 FR 64666 must be directed to a nonprovisional application filed under 35 USC 111(a) or be a national stage entry under 35 USC 371, exclusive of any reissue applications.

If reconsideration of this decision is desired, a petition for reconsideration must be filed within ONE (1) MONTH OR THIRTY (30) DAYS from the mail date of this decision, whichever is longer. No extension of this time limit can be granted under 37 CFR 1.136(a) or (b). The petition for reconsideration should include an exhaustive attempt to provide the lacking item(s) noted below, since, after a decision on the petition for reconsideration, no further reconsideration or review of the matter will be undertaken by the Director.

In order to qualify for special status, the following requirements must be met. 1) The application must have no more than 3 independent claims and no more than 20 total claims. 2) The application must not contain any multiple dependent claims. 3) The petition must state the basis for seeking special status, i.e., the claimed invention either: A) materially enhances the quality of the environment or B) materially contributes to: i) the discovery or development of renewable energy resources, ii) the more efficient utilization and conservation of energy resources, or iii) greenhouse gas emission reduction. 4) If the disclosure is not clear on its face that the claimed invention materially contributes under category (A) or (B), the petition must be accompanied by

a statement by the applicant, assignee, or an attorney/agent registered to practice before the Office explaining how the materiality standard is met. 5) A statement that applicant will agree to make an election without traverse in a telephonic interview if a restriction requirement is made by the examiner. 6) The petition to make special must be filed electronically. 7) The petition must be filed at least one day prior to the date that a first Office Action appears in the Patent Application Information Retrieval (PAIR) system. 8) The petition must be accompanied by a request for early publication in compliance with 37 CFR 1.219 and include the publication fee as set forth in 37 CFR 1.18(d).

The requirement for a fee for consideration of the petition to make special for applications pertaining to Green Technologies has been waived.

The instant petition complies with items 1 – 8 above. Accordingly, the above-identified application has been accorded "special" status.

Telephone inquires concerning this decision should be directed to Henry C. Yuen at 571-272-4856.

This application will be forwarded to the Technology Center Art Unit 3745 for action on the merits commensurate with this decision.

/Henry C. Yuen/

Henry C. Yuen
Quality Assurance Specialist
Technology Center TC 3700

Doc Code: PET.GREEN
Document Description: Petition for Green Tech Pilot

PTO/SB/420 (03-11)

PETITION TO MAKE SPECIAL UNDER THE GREEN TECHNOLOGY PILOT PROGRAM

Attorney Docket Number: 246307	Application Number (if known): 13/094330	Filing date: April 26, 2011

First Named Inventor: Devi, Ravindra

Title: SUCTION AND DISCHARGE MECHANISMS FOR AN APPLIANCE REFRIGERANT COMPRESSOR

APPLICANT HEREBY REQUESTS TO PARTICIPATE IN THE GREEN TECHNOLOGY PILOT PROGRAM FOR THE ABOVE-IDENTIFIED APPLICATION. See Instruction Sheet on page 2.

This petition must be timely filed electronically using the USPTO electronic filing system, EFS-Web.

1. By filing this petition:

   Applicant is requesting early publication: Applicant hereby requests early publication under 37 CFR 1.219 and the publication fee set forth in 37 CFR 1.18(d) accompanies this request.

2. By filing this petition: applicant is agreeing to make an election without traverse in a telephonic interview and elect an invention that meets the eligibility requirements for the Green Technology Pilot Program, if the Office determines that the claims are not obviously directed to a single invention. See Instruction Sheet.

3. This request is accompanied by statements of special status for the eligibility requirement.

4. The application contains no more than three (3) independent claims and twenty (20) total claims.

5. The application does not contain any multiple dependent claims.

6. Other attachments: _____

Signature /Allison W. Mages/	Date November 16, 2011
Name (Print/Typed) Allison W. Mages	Registration Number 57275

Note: *Signatures of all the inventors or assignees of record of the entire interest or their representative(s) are required in accordance with 37 CFR 1.33 and 11.18. Please see 37 CFR 1.4(d) for the form of the signature. If necessary, submit multiple forms for more than one signature, see below*.*

☐ *Total of _____ forms are submitted.

If you need assistance in completing the form, call 1-800-PTO-9199 and select option 2.

Instruction Sheet for
Petition to Make Special Under the Green Technology Pilot Program

(Not to be Submitted to the USPTO)

The following is a summary of the requirements (for more information see the notices (i) "Pilot Program for Green Technologies Including Greenhouse Gas Reduction," (ii) "Elimination of Classification Requirement in the Green Technology Pilot Program," and (iii) "Expansion and Extension of the Green Technology Pilot Program," available on the USPTO web site at http://www.uspto.gov/patents/init_events/green_tech.jsp):

(1) The application must be a non-reissue, non-provisional utility application filed under 35 U.S.C. 111(a), or an international application that has entered the national stage in compliance with 35 U.S.C. 371, irrespective of the filing date of the application. Reexamination proceedings are excluded from this pilot program.

(2) The application must contain three or fewer independent claims and twenty or fewer total claims. The application must not contain any multiple dependent claims. For an application that contains more than three independent claims or twenty total claims, or multiple dependent claims, applicant must file a preliminary amendment in compliance with 37 CFR 1.121 to cancel the excess claims and/or the multiple dependent claims at the time the petition to make special is filed.

(3) The claims must be directed to a single invention that materially enhances the quality of the environment, or that materially contributes to: (1) the discovery or development of renewable energy resources; (2) the more efficient utilization and conservation of energy resources; or (3) green house gas emission reduction (see the eligibility requirements of sections II and III of the notice (i) cited above). The petition must include a statement that, if the USPTO determines that the claims are directed to multiple inventions (e.g., in a restriction requirement), applicant will agree to make an election without traverse in a telephonic interview, and elect an invention that meets the eligibility requirements in section II or III of the notice (i) cited above.

(4) The petition to make special must be timely filed electronically using the USPTO electronic filing system, EFS-Web, and selecting the document description of "Petition for Green Tech Pilot" on the EFS-Web screen. Applicant should use form PTO/SB/420, which is available as a Portable Document Format (PDF) fillable form in EFS-Web and on the USPTO Web site.

(5) The petition to make special must be filed at least one day prior to the date that a first Office action (which may be an Office action containing only a restriction requirement) appears in the Patent Application Information Retrieval (PAIR) system. Applicant may check the status of the application using PAIR.

(6) The petition to make special must be accompanied by a request for early publication in compliance with 37 CFR 1.219 and the publication fee set forth in 37 CFR 1.18(d).

Privacy Act Statement

The **Privacy Act of 1974 (P.L. 93-579)** requires that you be given certain information in connection with your submission of the attached form related to a patent application or patent. Accordingly, pursuant to the requirements of the Act, please be advised that: (1) the general authority for the collection of this information is 35 U.S.C. 2(b)(2); (2) furnishing of the information solicited is voluntary; and (3) the principal purpose for which the information is used by the U.S. Patent and Trademark Office is to process and/or examine your submission related to a patent application or patent. If you do not furnish the requested information, the U.S. Patent and Trademark Office may not be able to process and/or examine your submission, which may result in termination of proceedings or abandonment of the application or expiration of the patent.

The information provided by you in this form will be subject to the following routine uses:

1. The information on this form will be treated confidentially to the extent allowed under the Freedom of Information Act (5 U.S.C. 552) and the Privacy Act (5 U.S.C 552a). Records from this system of records may be disclosed to the Department of Justice to determine whether disclosure of these records is required by the Freedom of Information Act.
2. A record from this system of records may be disclosed, as a routine use, in the course of presenting evidence to a court, magistrate, or administrative tribunal, including disclosures to opposing counsel in the course of settlement negotiations.
3. A record in this system of records may be disclosed, as a routine use, to a Member of Congress submitting a request involving an individual, to whom the record pertains, when the individual has requested assistance from the Member with respect to the subject matter of the record.
4. A record in this system of records may be disclosed, as a routine use, to a contractor of the Agency having need for the information in order to perform a contract. Recipients of information shall be required to comply with the requirements of the Privacy Act of 1974, as amended, pursuant to 5 U.S.C. 552a(m).
5. A record related to an International Application filed under the Patent Cooperation Treaty in this system of records may be disclosed, as a routine use, to the International Bureau of the World Intellectual Property Organization, pursuant to the Patent Cooperation Treaty.
6. A record in this system of records may be disclosed, as a routine use, to another federal agency for purposes of National Security review (35 U.S.C. 181) and for review pursuant to the Atomic Energy Act (42 U.S.C. 218(c)).
7. A record from this system of records may be disclosed, as a routine use, to the Administrator, General Services, or his/her designee, during an inspection of records conducted by GSA as part of that agency's responsibility to recommend improvements in records management practices and programs, under authority of 44 U.S.C. 2904 and 2906. Such disclosure shall be made in accordance with the GSA regulations governing inspection of records for this purpose, and any other relevant (*i.e.*, GSA or Commerce) directive. Such disclosure shall not be used to make determinations about individuals.
8. A record from this system of records may be disclosed, as a routine use, to the public after either publication of the application pursuant to 35 U.S.C. 122(b) or issuance of a patent pursuant to 35 U.S.C. 151. Further, a record may be disclosed, subject to the limitations of 37 CFR 1.14, as a routine use, to the public if the record was filed in an application which became abandoned or in which the proceedings were terminated and which application is referenced by either a published application, an application open to public inspection or an issued patent.
9. A record from this system of records may be disclosed, as a routine use, to a Federal, State, or local law enforcement agency, if the USPTO becomes aware of a violation or potential violation of law or regulation.

UNITED STATES PATENT AND TRADEMARK OFFICE

UNITED STATES DEPARTMENT OF COMMERCE
United States Patent and Trademark Office
Address: COMMISSIONER FOR PATENTS
P.O. Box 1450
Alexandria, Virginia 22313-1450
www.uspto.gov

APPLICATION NO.	FILING DATE	FIRST NAMED INVENTOR	ATTORNEY DOCKET NO.	CONFIRMATION NO.
13/094,330	04/26/2011	Ravindra Gopaldas Devi	246307/GECA-91	1425

99491 7590 12/07/2011

Dority and Manning, P.A and General
Electric-Appliance and Lighting
PO Box 1449
greenville, SC 29602

EXAMINER	
ART UNIT	PAPER NUMBER
3746	

MAIL DATE	DELIVERY MODE
12/07/2011	PAPER

Please find below and/or attached an Office communication concerning this application or proceeding.

The time period for reply, if any, is set in the attached communication.

UNITED STATES PATENT AND TRADEMARK OFFICE

Commissioner for Patents
United States Patent and Trademark Office
P.O. Box 1450
Alexandria, VA 22313-1450
www.uspto.gov

Dority and Manning, P.A and General
Electric-Appliance and Lighting
PO Box 1449
Greenville SC 29602

In re Application of
DEVI, RAVINDRA GOPALDAS et. al. : DECISION ON PETITION
Application No. 13/094,330 : TO MAKE SPECIAL UNDER
Filed: April 26, 2011 : THE GREEN TECHNOLOGY
Attorney Docket No. 246307/GECA-91 : PILOT PROGRAM

This is a decision on the petition under 37 CFR 1.102, filed November 16, 2011, to make the above-identified application special under the pilot program for applications pertaining to Green Technologies as set forth in 74 Federal Register Notice 64666 (December 8, 2009) and amended by 75 Federal Register Notice 28554 (May 21, 2010) and 75 Federal Register Notice 69049 (November 10, 2010).

The petition is **granted**.

A grantable petition to make an application special under 37 CFR 1.102 and the pilot program as set forth in 74 FR 64666 must be directed to a nonprovisional application filed under 35 USC 111(a) or be a national stage entry under 35 USC 371, exclusive of any reissue applications.

If reconsideration of this decision is desired, a petition for reconsideration must be filed within ONE (1) MONTH OR THIRTY (30) DAYS from the mail date of this decision, whichever is longer. No extension of this time limit can be granted under 37 CFR 1.136(a) or (b). The petition for reconsideration should include an exhaustive attempt to provide the lacking item(s) noted below, since, after a decision on the petition for reconsideration, no further reconsideration or review of the matter will be undertaken by the Director.

In order to qualify for special status, the following requirements must be met. 1) The application must have no more than 3 independent claims and no more than 20 total claims. 2) The application must not contain any multiple dependent claims. 3) The petition must state the basis for seeking special status, i.e., the claimed invention either: A) materially enhances the quality of the environment or B) materially contributes to: i) the discovery or development of renewable energy resources, ii) the more efficient utilization and conservation of energy resources, or iii) greenhouse gas emission reduction. 4) If the disclosure is not clear on its face that the claimed invention materially contributes under category (A) or (B), the petition must be accompanied by

a statement by the applicant, assignee, or an attorney/agent registered to practice before the Office explaining how the materiality standard is met. 5) A statement that applicant will agree to make an election without traverse in a telephonic interview if a restriction requirement is made by the examiner. 6) The petition to make special must be filed electronically. 7) The petition must be filed at least one day prior to the date that a first Office Action appears in the Patent Application Information Retrieval (PAIR) system. 8) The petition must be accompanied by a request for early publication in compliance with 37 CFR 1.219 and include the publication fee as set forth in 37 CFR 1.18(d).

The requirement for a fee for consideration of the petition to make special for applications pertaining to Green Technologies has been waived.

The instant petition complies with items 1 – 8 above. Accordingly, the above-identified application has been accorded "special" status.

Telephone inquires concerning this decision should be directed to Henry C. Yuen at 571-272-4856.

This application will be forwarded to the Technology Center Art Unit 3746 for action on the merits commensurate with this decision.

/Henry C. Yuen/

Henry C. Yuen
Quality Assurance Specialist
Technology Center TC 3700

UNITED STATES PATENT AND TRADEMARK OFFICE

UNITED STATES DEPARTMENT OF COMMERCE
United States Patent and Trademark Office
Address: COMMISSIONER FOR PATENTS
P.O. Box 1450
Alexandria, Virginia 22313-1450
www.uspto.gov

APPLICATION NO.	FILING DATE	FIRST NAMED INVENTOR	ATTORNEY DOCKET NO.	CONFIRMATION NO.
13/094,340	04/26/2011	Zexin Liu	4202-12000	1447

97698 7590 05/11/2011

Huawei Technologies Co., Ltd.
c/o Conley Rose, P.C.
5601 Granite Parkway
Plano, TX 75024

EXAMINER	
CHAWAN, VIJAY B	
ART UNIT	PAPER NUMBER
2626	

MAIL DATE	DELIVERY MODE
05/11/2011	PAPER

Please find below and/or attached an Office communication concerning this application or proceeding.

The time period for reply, if any, is set in the attached communication.

UNITED STATES PATENT AND TRADEMARK OFFICE

Commissioner for Patents
United States Patent and Trademark Office
P.O. Box 1450
Alexandria, VA 22313-1450
www.uspto.gov

Huawei Technologies Co., Ltd.
c/o Conley Rose, P.C.
5601 Granite Parkway
Plano TX 75024

In re Application of:
LIU, ZEXIN et al.
Serial No.: 13/094,340
Filed: April 26, 2011
Docket: **4202-12000**
Title: **METHOD AND APPARATUS FOR SWITCHING SPEECH OR AUDIO SIGNALS**

DECISION ON PETITION TO MAKE SPECIAL FOR NEW APPLICATION UNDER 37 C.F.R. § 1.102 & M.P.E.P. § 708.02

This is a decision on the petition filed on April 26, 2011 requesting to make the above-identified application special for accelerated examination procedure under 37 C.F.R. § 1.102(d).

The petition to make the application special is GRANTED.

The application is eligible for accelerated examination and the petition complies with the conditions for granting the application special status pursuant to the "Change to Practice for Petitions in Patent Applications to Make Special and for Accelerated Examination" published June 26, 2006, in the Federal Register. (71 Fed. Reg. 36323).

The prosecution of the instant application will be conducted expeditiously according to the following guidelines.

1. The application will be docketed to an examiner and taken up for action within two weeks of the date of this decision.

2. Restriction Practice:
   If the examiner determines that the claims are not directed to a single invention, a telephone request to elect one single invention will be made pursuant to MPEP 812.01. As a prerequisite to the grant of this petition, the applicant has agreed to make an oral election, by telephone, without traverse. If the applicant refuses to make an election without traverse, or the examiner cannot reach the applicant after a reasonable effort, the examiner will treat the first claimed invention (invention defined by claim 1) as having being constructively elected without traverse for examination.

3. Office action:

If it is determined that, after appropriate consultation, there is a potential rejection or any other issue to be addressed, the examiner will telephone the applicant and arrange an interview to discuss and resolve the issue. An Office action, other than a Notice of Allowance and Fee(s) Due (Notice of Allowance), will not be issued unless either: 1) an interview was conducted but did not result in agreed to action that places the application in condition for allowance, or, 2) a determination is made that an interview would be unlikely to result in the application being placed in condition for allowance, and 3) an internal conference has been held to review any rejection of any claim.

4. Time for Reply:
An Office action other than a Notice of Allowance or a final Office action will set a shortened statutory period of one month or thirty days, whichever is longer, for reply with no extension of time available under 37 CFR 1.136(a). Failure to timely file a reply within this non-extendible period for reply will result in the abandonment of the application.

5. Reply by Applicant:
A timely reply to an Office action other than the Notice of Allowance must be submitted electronically via EFS or EFS-web and limited to addressing the rejections, objections and requirement made. Any amendment that attempts to: 1) add claims which would result in more than three pending independent claims or more than twenty pending total claims; 2) present claims not encompassed by the pre-examination search or an updated accelerated examination support document; or 3) present claims that are directed a non-elected invention or an invention other than that previously claimed and examined in the application, will be treated as not fully responsive and will not be entered.

For any amendment to the claims (including any new claim) that is not encompassed by the accelerated examination support document, applicant must provide an updated accelerated examination support document that encompasses the amended or new claims at the time of filing of the amendment.

To proceed expeditiously with the examination, it is recommended that a reply with amendments made to any claim or with any new claim being added be accompanied by an updated accelerated examination support document or a statement explaining how the amended or new claim is supported by the original accelerated examination support document.

6. Information Disclosure Statement (IDS):
Any IDS filed during prosecution must be submitted electronically via EFS or EFS-web, accompanied by an updated accelerated examination support document, and be in compliance with 37 CFR 1.97 and 1.98.

7. Post-Allowance Processing:
To expedite processing of the allowed application into a patent, the applicant must: 1) pay the required fees within one month of the date of the Notice of Allowance, and 2) not

file any post allowance papers not required by the Office. In no event may the issue fee be paid and accepted later than three months from the date of the Notice of Allowance.

8. After-Final and Appeal Procedures:
To expedite prosecution, after receiving the final Office action, applicant must: 1) promptly file a notice of appeal, an appeal brief and appeal fees; and 2) not request a pre-appeal brief conference.

   Any amendment, affidavit or other evidence filed after final Office action must comply with applicable rules and the requirements outlined in numbered paragraphs 5 and 6 above.

   On appeal, the application will proceed according to normal appeal procedures. After appeal, the application will again be treated special.

9. Proceedings Outside the Normal Examination Process:
If the application becomes involved in a proceeding that is outside the normal examination process (e.g., a secrecy order, national security review, interference proceeding, petitions under 37 CFR 1.181, 182 or 183), the application will be treated special before and after such proceeding.

10. Final Disposition:
The twelve month goal of this accelerated examination procedure ends with a final disposition. The mailing of a final Office action, a Notice of Allowance, the filing of a Notice of Appeal, or the filing of a Request for Continued Examination (RCE) is the final disposition.

If, during prosecution, a paper is not filed electronically using EFS-web, a reply is filed but is not fully responsive, the application is involved in an appeal, or a proceeding outside normal examination process, the application will still be examined expeditiously, however, the final disposition may occur more than twelve months from the filing of the application.

Any inquiry regarding this decision should be directed to Doris To, Quality Assurance Specialist, at (571) 272-7629.

/ Doris To /

Doris To
Quality Assurance Specialist
Technology Center 2600

UNITED STATES PATENT AND TRADEMARK OFFICE

UNITED STATES DEPARTMENT OF COMMERCE
United States Patent and Trademark Office
Address: COMMISSIONER FOR PATENTS
P.O. Box 1450
Alexandria, Virginia 22313-1450
www.uspto.gov

APPLICATION NO.	FILING DATE	FIRST NAMED INVENTOR	ATTORNEY DOCKET NO.	CONFIRMATION NO.
13/094,352	04/26/2011	HIROKAZU NAGASHIMA	TOSH/0269US	1475

26290 7590 11/07/2011
PATTERSON & SHERIDAN, L.L.P.
3040 POST OAK BOULEVARD
SUITE 1500
HOUSTON, TX 77056

EXAMINER	
KOENIG, ANDREW Y	

ART UNIT	PAPER NUMBER
2423	

MAIL DATE	DELIVERY MODE
11/07/2011	PAPER

Please find below and/or attached an Office communication concerning this application or proceeding.

The time period for reply, if any, is set in the attached communication.

UNITED STATES PATENT AND TRADEMARK OFFICE

Commissioner for Patents
United States Patent and Trademark Office
P.O. Box 1450
Alexandria, VA 22313-1450
www.uspto.gov

Federick D. Kim
PATTERSON & SHERIDAN, L.L.P.
3040 POST OAK BOULEVARD
SUITE 1500
HOUSTON TX 77056

In re Application of: NAGASHIMA, H.
Application No.: **13094352**
Filed: April 26, 2011
Attorney Docket No.: TOSH/0269US
For: INFORMATION PROCESSING APPARATUS AND CONTENT RECEIVING METHOD

DECISION ON REQUEST TO PARTICIPATE IN PATENT PROSECUTION HIGHWAY PROGRAM AND PETITION TO MAKE SPECIAL UNDER 37 CFR 1.102(a)

This is a decision on the request to participate in the Patent Prosecution Highway (PPH) program and the petition under 37 CFR 1.102(a), filed **October 28, 2011**, to make the above-identified application special.

The petition is **GRANTED.**

(1) The U.S. application for which participation in the PPH program is requested and the corresponding JPO application must have the same priority/filing date. In particular, the U.S. application (including national stage entry of a PCT application and a so-called bypass application filed under 35 U.S.C. § 111(a) which validly claims benefit under 35 U.S.C. § 120 to a PCT application):

(Case I) – is an application that validly claims priority under 35 U.S.C. § 119(a) and 37 CFR 1.55 to one or more applications filed with JPO (examples are provided in the ANNEX, Figures A, B, C and D), or

(Case II) – is an application which is the basis of a valid priority claim under the Paris Convention for the application filed in JPO (examples are provided in the ANNEX, Figures E, F and G), or

(Case III) – is an application which shares a common priority document with the application filed in JPO (examples are provided in the ANNEX, Figures H, I, J, K, L, M and N), or

(Case IV) – and the JPO application are derived from/related to a PCT application having no priority claim (examples are provided in the ANNEX, Figure O).

(2) At least one claim was determined by JPO to be allowable/patentable.

The applicant must submit a copy of the allowable/patentable claims from the JPO application along with an English translation thereof and a statement that the English translation is accurate if the claims are not in the English language.

If the JPO office action does not explicitly state that a particular claim is allowable, the applicant must include a statement in the request for participation in the PPH program or in the transmittal letter accompanying the request for participation that no rejection has been made in the JPO office action regarding that claim, and therefore, the claim is deemed allowable by JPO.

(3) All claims on file, as originally filed or as amended, for examination under the PPH must sufficiently correspond to one or more of those claims indicated as allowable in the JPO.

Claims are considered to "sufficiently correspond" where, accounting for differences due to translations and claim format, the claims in the USPTO are of the same or similar scope as the claims in the JPO, or the claims in the USPTO are narrower in scope than the claims in the JPO.

In this regard, a claim that is narrower in scope occurs when a JPO claim is amended to be further limited by an additional feature that is supported in the specification (description and/or claims). A claim in the USPTO which introduces a new/different category of claims to those claims indicated as allowable in the JPO is not considered to sufficiently correspond. For example, if the JPO claims only contain claims to a process of manufacturing a product, then the claims in the USPTO are not considered to sufficiently correspond if the USPTO claims introduce product claims that are dependent on the corresponding process claims.

The additional limitation that makes the claims in the U.S. application narrower in scope than the allowable/patentable claims in the JPO application must have support in the written description of the U.S. application and the additional limitation must be presented in dependent form. The applicant is required to submit a claims correspondence table in English. The claims correspondence table must indicate how all the claims in the U.S. application correspond to the allowable/patentable claims in the JPO application(s). The dependent claims with the additional limitations must be clearly identified in the claims correspondence table.

(4) Examination of the U.S. application for which participation in the PPH program is requested has not begun.

(5) The applicant must file a request for participation in the PPH program and a request that the U.S. application be advanced out of turn for examination by order of the Director to expedite the business of the Office under 37 CFR 1.102(a). A revised request form (PTO/SB/20JP) will be available from the USPTO Web site at http://www.uspto.gov on July 15, 2011. Applicants are encouraged to use the USPTO request form. A petition fee under 37 CFR 1.17(h) is NOT required. See Notice Regarding the Elimination of the Fee for Petitions To Make Special Filed Under the Patent Prosecution Highway (PPH) Programs, 75 Fed. Reg. 29312 (May 25, 2010).

(6) The applicant must submit a copy of the office action from the JPO application just prior to the "Decision to Grant a Patent" (e.g., the latest "Notification of Reasons for Refusal") from each of the JPO application(s) containing the allowable/patentable claims that are the basis for the request, along with an English translation thereof and a statement that the English translation is accurate if the office actions are not in the English language. It will not be necessary for applicant to submit a copy of the "Decision to Grant a Patent" and an English translation thereof. If the JPO application is a first action allowance, i.e., there is no office action just prior to the "Decision to Grant a Patent," then applicant should indicate on the request form that no office action from the JPO application is submitted since the JPO application was a first action allowance.

The applicant must submit copies of any office actions (which are relevant to patentability) from the JPO application(s) issued after the grant of the request for participation in the PPH program in the USPTO (especially where JPO might have reversed a prior holding of allowability).

(7) The applicant must submit an information disclosure statement (IDS) listing the documents cited by the JPO examiner in the JPO office action (unless such an IDS has already been filed in the U.S. application). The applicant must submit copies of all the documents cited in the JPO office action (unless the copies have already been filed in the U.S. application) except U.S. patents or U.S. patent application publications.

The request for participation in the PPH program and all the supporting documents must be submitted to the USPTO via EFS-Web and indexed with the following document description: "Petition to make special under Patent Pros Hwy." Information regarding EFS-Web is available at http://www.uspto.gov/ebc/efs_help.html. Any preliminary amendment or IDS submitted with the PPH documents must be separately indexed as a preliminary amendment or an IDS, respectively.

The request for participation in the PPH program meets all of the above requirements, and hereby, "**special**" status is **granted**.

Accordingly, the U.S. application will be advanced out of turn for examination.

Telephone inquiries concerning this decision should be directed to Beatriz Prieto at 571-272-3902. A second point of contact is Hassan Kizou at 571-272-3088. All other inquiries concerning the examination or status of the application is accessible in the PAIR system at http://www.uspto.gov/ebc/index.html.

The application is being forwarded to the examiner for action on the merits commensurate with this decision.

/Beatriz Prieto/

Beatriz Prieto, Quality Assurance Specialist
WQAS, Technology Center 2400

Doc Code: PET.GREEN
Document Description: Petition for Green Tech Pilot

PTO/SB/420 (05-10)
Approved for use through 01/31/2011. OMB 0651-0062
U.S. Patent and Trademark Office; U. S. DEPARTMENT OF COMMERCE
Under the Paperwork Reduction Act of 1995, no persons are required to respond to a collection of information unless it displays a valid OMB control number.

PETITION TO MAKE SPECIAL UNDER THE GREEN TECHNOLOGY PILOT PROGRAM

Attorney Docket Number: O2-0512.DIV	Application Number (if known):	Filing date:

First Named Inventor: Kaiping RAN

Title: BACKLIGHT CONTROLLER FOR DRIVING LIGHT SOURCES

APPLICANT HEREBY REQUESTS TO PARTICIPATE IN THE GREEN TECHNOLOGY PILOT PROGRAM FOR THE ABOVE-IDENTIFIED APPLICATION. **See Instruction Sheet on page 2.**

This petition must be timely filed electronically using the USPTO electronic filing system, EFS-Web.

1. By filing this petition:

   Applicant is requesting early publication: Applicant hereby requests early publication under 37 CFR 1.219 and the publication fee set forth in 37 CFR 1.18(d) accompanies this request.

2. By filing this petition: applicant is agreeing to make an election without traverse in a telephonic interview and elect an invention that meets the eligibility requirements set forth in the notice titled "Pilot Program for Green Technologies Including Greenhouse Gas Reduction," as modified by the notice titled "Elimination of Classification Requirement in the Green Technology Pilot Program," each of which was published in the Federal Register, if the Office determines that the claims are not obviously directed to a single invention.

3. This request is accompanied by statements of special status for the eligibility requirement.

4. The application contains no more than three (3) independent claims and twenty (20) total claims.

5. The application does not contain any multiple dependent claims.

6. Other attachments: _____

Signature /Yue Li/	Date 2011-04-26
Name (Print/Typed) Yue Li	Registration Number L0346

Note: *Signatures of all the inventors or assignees of record of the entire interest or their representative(s) are required in accordance with 37 CFR 1.33 and 11.18. Please see 37 CFR 1.4(d) for the form of the signature. If necessary, submit multiple forms for more than one signature, see below*.*

☐ *Total of _____ forms are submitted.

The information is required to obtain or retain a benefit by the public which is to file (and by the USPTO to process) an application. Confidentiality is governed by 35 U.S.C. 122 and 37 CFR 1.11 and 1.14. This collection is estimated to take 1 hour to complete, including gathering, preparing, and submitting the completed application form to the USPTO. Time will vary depending upon the individual case. Any comments on the amount of time you require to complete this form and/or suggestions for reducing this burden, should be sent to the Chief Information Officer, U.S. Patent and Trademark Office, U.S. Department of Commerce, P.O. Box 1450, Alexandria, VA 22313-1450. DO NOT SEND FEES OR COMPLETED FORMS TO THIS ADDRESS. **SEND TO: Commissioner for Patents, P.O. Box 1450, Alexandria, VA 22313-1450.**

If you need assistance in completing the form, call 1-800-PTO-9199 and select option 2.

PTO/SB/420 (05-10)
Approved for use through 01/31/2011. OMB 0651-0062
U.S. Patent and Trademark Office; U. S. DEPARTMENT OF COMMERCE
Under the Paperwork Reduction Act of 1995, no persons are required to respond to a collection of information unless it displays a valid OMB control number.

Instruction Sheet for Petition to Make Special Under the Green Technology Pilot Program

(Not to be Submitted to the USPTO)

***The following is a summary of the requirements** (for more information see the notices (i) "Pilot Program for Green Technologies Including Greenhouse Gas Reduction" and (ii) "Elimination of Classification Requirement in the Green Technology Pilot Program," available on the USPTO web site at http://www.uspto.gov/patents/init_events/green_tech.jsp):*

(1) The application must be a non-reissue, non-provisional utility application filed under 35 U.S.C. 111(a), or an international application that has entered the national stage in compliance with 35 U.S.C. 371. The application must be previously filed before the publication date of the notice cited above. Reexamination proceedings are excluded from this pilot program.

(2) The application must contain three or fewer independent claims and twenty or fewer total claims. The application must not contain any multiple dependent claims. For an application that contains more than three independent claims or twenty total claims, or multiple dependent claims, applicant must file a preliminary amendment in compliance with 37 CFR 1.121 to cancel the excess claims and/or the multiple dependent claims at the time the petition to make special is filed.

(3) The claims must be directed to a single invention that materially enhances the quality of the environment, or that materially contributes to: (1) the discovery or development of renewable energy resources; (2) the more efficient utilization and conservation of energy resources; or (3) green house gas emission reduction (see the eligibility requirements of sections II and III of the notice (i) cited above). The petition must include a statement that, if the USPTO determines that the claims are directed to multiple inventions (e.g., in a restriction requirement), applicant will agree to make an election without traverse in a telephonic interview, and elect an invention that meets the eligibility requirements in section II or III of the notice (i) cited above.

(4) The petition to make special must be timely filed electronically using the USPTO electronic filing system, EFS-Web, and selecting the document description of "Petition for Green Tech Pilot" on the EFS-Web screen. Applicant should use form PTO/SB/420, which is available as a Portable Document Format (PDF) fillable form in EFS-Web and on the USPTO Web site.

(5) The petition to make special must be filed at least one day prior to the date that a first Office action (which may be an Office action containing only a restriction requirement) appears in the Patent Application Information Retrieval (PAIR) system. Applicant may check the status of the application using PAIR.

(6) The petition to make special must be accompanied by a request for early publication in compliance with 37 CFR 1.219 and the publication fee set forth in 37 CFR 1.18(d).

Privacy Act Statement

The **Privacy Act of 1974 (P.L. 93-579)** requires that you be given certain information in connection with your submission of the attached form related to a patent application or patent. Accordingly, pursuant to the requirements of the Act, please be advised that: (1) the general authority for the collection of this information is 35 U.S.C. 2(b)(2); (2) furnishing of the information solicited is voluntary; and (3) the principal purpose for which the information is used by the U.S. Patent and Trademark Office is to process and/or examine your submission related to a patent application or patent. If you do not furnish the requested information, the U.S. Patent and Trademark Office may not be able to process and/or examine your submission, which may result in termination of proceedings or abandonment of the application or expiration of the patent.

The information provided by you in this form will be subject to the following routine uses:

1. The information on this form will be treated confidentially to the extent allowed under the Freedom of Information Act (5 U.S.C. 552) and the Privacy Act (5 U.S.C 552a). Records from this system of records may be disclosed to the Department of Justice to determine whether disclosure of these records is required by the Freedom of Information Act.
2. A record from this system of records may be disclosed, as a routine use, in the course of presenting evidence to a court, magistrate, or administrative tribunal, including disclosures to opposing counsel in the course of settlement negotiations.
3. A record in this system of records may be disclosed, as a routine use, to a Member of Congress submitting a request involving an individual, to whom the record pertains, when the individual has requested assistance from the Member with respect to the subject matter of the record.
4. A record in this system of records may be disclosed, as a routine use, to a contractor of the Agency having need for the information in order to perform a contract. Recipients of information shall be required to comply with the requirements of the Privacy Act of 1974, as amended, pursuant to 5 U.S.C. 552a(m).
5. A record related to an International Application filed under the Patent Cooperation Treaty in this system of records may be disclosed, as a routine use, to the International Bureau of the World Intellectual Property Organization, pursuant to the Patent Cooperation Treaty.
6. A record in this system of records may be disclosed, as a routine use, to another federal agency for purposes of National Security review (35 U.S.C. 181) and for review pursuant to the Atomic Energy Act (42 U.S.C. 218(c)).
7. A record from this system of records may be disclosed, as a routine use, to the Administrator, General Services, or his/her designee, during an inspection of records conducted by GSA as part of that agency's responsibility to recommend improvements in records management practices and programs, under authority of 44 U.S.C. 2904 and 2906. Such disclosure shall be made in accordance with the GSA regulations governing inspection of records for this purpose, and any other relevant (*i.e.*, GSA or Commerce) directive. Such disclosure shall not be used to make determinations about individuals.
8. A record from this system of records may be disclosed, as a routine use, to the public after either publication of the application pursuant to 35 U.S.C. 122(b) or issuance of a patent pursuant to 35 U.S.C. 151. Further, a record may be disclosed, subject to the limitations of 37 CFR 1.14, as a routine use, to the public if the record was filed in an application which became abandoned or in which the proceedings were terminated and which application is referenced by either a published application, an application open to public inspection or an issued patent.
9. A record from this system of records may be disclosed, as a routine use, to a Federal, State, or local law enforcement agency, if the USPTO becomes aware of a violation or potential violation of law or regulation.

IN THE UNITED STATES PATENT AND TRADEMARK OFFICE

Applicant: Kaiping RAN et al. Examiner:
Serial No.: Group Art Unit:
Filed: Docket: O2-0512.DIV
Confirmation No.:
Title: BACKLIGHT CONTROLLER FOR DRIVING LIGHT SOURCES

STATEMENT OF SPECIAL STATUS FOR PETITION TO MAKE SPECIAL UNDER THE GREEN TECHNOLOGY PILOT PROGRAM

I hereby certify that this correspondence is being electronically transmitted to the USPTO via EFS on the date show below:
April 26, 2011
/Julie Dalla/
Julie Dalla

Commissioner for Patents
P.O. Box 1450
Alexandria, VA 22313-1450

Dear Sir:

BASIS FOR SPECIAL STATUS

Special status under the Green Technology Pilot program is sought because the claimed subject matter of this Application materially contributes to the more efficient utilization and conservation of energy resources. Further, the claimed subject matter of this Application materially enhances the quality of the environment through energy conservation.

HOW THE MATERIALITY STANDARD IS MET

The claimed subject matter of this Application is directed to display system, method and backlight controller for driving light emitting diode (LED) strings. The

display system, method and backlight controller materially improve power efficiency and materially reduce heat dissipation compared to non-LED technology. Moreover, the claimed invention subject matter provides for the automatic phase shift adjustments according to a total number of light source strings in operation such that the burst-mode dimming control can be improved. Additionally, the claimed subject matter may be employed in industrial equipment, commercial equipment, and household appliances to materially contribute to the more efficient utilization and conservation of energy resources.

An example of a household appliance is a display system. In a display system, one or more light sources are driven by a driving circuit for illuminating a display panel. For example, in a liquid crystal display (LCD) display system with light emitting diode (LED) backlight, an LED array is used for illuminating an LCD panel. An LED array may comprise two or more LED strings, and each LED string may comprise a group of LEDs connected, for example, in series. The claimed subject matter may be employed herein to drive the LED array and to reduce power line ripple current.

LEDs have a multitude of environmental advantages. Unlike incandescent and fluorescent bulbs, an LED light source does not utilize a filament or any type of luminary gas. LEDs contain no harmful chemicals such as mercury which is found in fluorescent lights. LEDs are manufactured from materials that can be fully recycled. Most energy used by the LED is converted into light, not heat. Traditional lighting is

relatively inefficient due to the large amounts of heat generated in the production of light. Moreover, LEDs have a longer lifespan.

The Commissioner is hereby authorized to charge fees associated with this communication or credit any overpayment to Deposit Account No.: 50-4245.

Please direct all correspondence concerning the above-identified application to the following address:

O2MICRO, INC.
3118 Patrick Henry Dr.
Santa Clara, California 95054
(408) 987-5920
71271

Respectfully submitted,

Date: 04/26/2011

By: /Yue Li/
Yue Li
Reg. No. L0346

UNITED STATES PATENT AND TRADEMARK OFFICE

UNITED STATES DEPARTMENT OF COMMERCE
United States Patent and Trademark Office
Address: COMMISSIONER FOR PATENTS
P.O. Box 1450
Alexandria, Virginia 22313-1450
www.uspto.gov

APPLICATION NO.	FILING DATE	FIRST NAMED INVENTOR	ATTORNEY DOCKET NO.	CONFIRMATION NO.
13/094,384	04/26/2011	Kaiping Ran	0512DIV	1535

71271 7590 06/14/2011
PATENT PROSECUTION
O2MIRCO , INC.
3118 PATRICK HENRY DRIVE
SANTA CLARA, CA 95054

EXAMINER	
ART UNIT	PAPER NUMBER
2629	

MAIL DATE	DELIVERY MODE
06/14/2011	PAPER

Please find below and/or attached an Office communication concerning this application or proceeding.

The time period for reply, if any, is set in the attached communication.

13UNITED STATES PATENT AND TRADEMARK OFFICE

Commissioner for Patents
United States Patent and Trademark Office
P.O. Box 1450
Alexandria, VA 22313-1450
www.uspto.gov

PATENT PROSECUTION
O2MIRCO , INC.
3118 PATRICK HENRY DRIVE
SANTA CLARA CA 95054

In re Application of	:	
RAN, KAIPING ET AL	:	DECISION ON PETITION
Application No. 13/094,384	:	TO MAKE SPECIAL UNDER
Filed: April 26, 2011	:	THE GREEN TECHNOLOGY
Attorney Docket No. **0512DIV**	:	PILOT PROGRAM

This is a decision on the petition under 37 CFR 1.102, filed April 26, 2011, to make the above-identified application special under the pilot program for applications pertaining to Green Technologies as set forth 74 Federal Register Notice 64666 (December 8, 2009).

The petition is **GRANTED**.

A grantable petition to make an application special under 37 CFR 1.102 and the pilot program as set forth in 74 FR 64666 must be directed to a nonprovisional application filed under 35 USC 111(a) or be a national stage entry under 35 USC 371, exclusive of any reissue applications and be filed prior to the date of the notice, December 8, 2009.

In order to qualify for special status, the following requirements must be met. 1) The application must have no more than 3 independent claims and no more than 20 total claims. 2) The application must not contain any multiple dependent claims. 3) The petition must state the basis for seeking special status, i.e., the claimed invention either: A) materially enhances the quality of the environment or B) materially contributes to: i) the discovery or development of renewable energy resources, ii) the more efficient utilization and conservation of energy resources, or iii) greenhouse gas emission reduction. 4) If the disclosure is not clear on its face that the claimed invention materially contributes under category (A) or (B), the petition must be accompanied by a statement by the applicant, assignee, or an attorney/agent registered to practice before the Office explaining how the materiality standard is met. 5) A statement that applicant will agree to make an election without traverse in a telephonic interview if a restriction requirement is made by the examiner. 6) The petition to make special must be filed electronically. 7) The petition must be filed at least one day prior to the date that a first Office Action appears in the Patent Application Information Retrieval (PAIR) system. 8) The petition must be accompanied by a request for early publication in compliance with 37 CFR 1.219 and include the publication fee as set forth in 37 CFR 1.18(d).

The requirement for a fee for consideration of the petition to make special for applications pertaining to Green Technologies has been waived.

The instant petition complies with items 1 – 8 above. Accordingly, the above-identified application has been accorded "special" status.

Telephone inquires concerning this decision should be directed to John Peng at 571-272-7272.

The application is being forwarded to the Technology Center Art Unit 2629 for action on the merits commensurate with this decision.

/John Peng/

John Peng
Quality Assurance Specialist
Technology Center 2600

UNITED STATES PATENT AND TRADEMARK OFFICE

Commissioner for Patents
United States Patent and Trademark Office
P.O. Box 1450
Alexandria, VA 22313-1450
www.uspto.gov

JOHN S. PRATT, ESQ
KILPATRICK TOWNSEND & STOCKTON LLP
1100 PEACHTREE STREET
SUITE 2800
ATLANTA GA 30309

MAILED
AUG 09 2011
OFFICE OF PETITIONS

In re Application of
Fritz and Doaran
Application No.: 13/094,413
Filed: April 26, 2011
Attorney Docket No: **54967/803189**
For: TRASH COMPACTOR BIN COMPONENTS AND METHODS

: DECISION ACCORDING
: RULE 47(a) STATUS

This is in response to the petition under 37 CFR 1.47(a), filed July 28, 2011.

The petition is **GRANTED**.

The above-identified application and papers have been reviewed and found in compliance with 37 CFR 1.47(a). This application is hereby accorded Rule 1.47(a) status.

The above-cited application was filed on April 26, 2011, and was not accompanied by a proper declaration. A Notice to File Missing Parts of Nonprovisional Application was mailed on May 9, 2011, requiring a properly executed declaration and surcharge, along with other requirements. The notice allowed an extendable period for reply of two months from its mailing date. On July 28, 2011, the instant petition was filed, with a request for an extension of time within the first month.

Petitioner has shown that inventor Fritz has constructively refused to join the prosecution of the above-identified application. The above-identified application and papers have been reviewed and found in compliance with 37 CFR 1.47(a). This application is hereby accorded Rule 1.47(a) status.

As provided in Rule 1.47(c), this Office will forward notice of this application's filing to the non-signing inventor at the addresses given in the petition. Notice of the filing of this application will also be published in the Official Gazette.

This application will be forwarded to the Office of Patent Application Processing for further review.

Telephone inquiries concerning this decision should be directed to the undersigned at (571) 272-3222.

/Kenya A. McLaughlin/

Kenya A. McLaughlin
Petitions Attorney
Office of Petitions

UNITED STATES PATENT AND TRADEMARK OFFICE

Commissioner for Patents
United States Patent and Trademark Office
P.O. Box 1450
Alexandria, VA 22313-1450
www.uspto.gov

MAILED

AUG 09 2011

OFFICE OF PETITIONS

Bob Fritz
2970 Edgewick Road
Glendale, CA 91206

In re Application of :
Fritz and Doaran :
Application No.: 13/094,413 : LETTER
Filed: April 26, 2011 :
Attorney Docket No: **54967/803189** :
For: TRASH COMPACTOR BIN COMPONENTS AND METHODS

Dear Mr. Fritz:

You are named as a joint inventor in the above-identified United States patent application filed under the provisions of 35 U.S.C. 116 (United States Code) and 37 CFR 1.47(a), Rules of Practice in Patent Cases. Should a patent be granted on the application you will be designated therein as a joint inventor.

As a joint inventor, you are entitled to inspect any paper in the file wrapper of the application, order copies of all or any part thereof (at a prepaid cost per 37 CFR 1.19) or make your position of record in the application. Alternatively, you may arrange to do any of the preceding through a registered patent attorney or agent presenting written authorization from you. If you care to join the application, counsel of record (see below) would presumably assist you. Joining in the application would entail the filing of an appropriate oath or declaration by you pursuant to 37 CFR 1.63.

Telephone inquiries regarding this communication should be directed to Petitions Attorney Kenya A. McLaughlin at (571) 272-3222. Requests for information regarding your application should be directed to the File Information Unit at (703) 308-2733. Information regarding how to pay for and order a copy of the application, or a specific paper in the application, should be directed to Certification Division at (703) 308-9726 or 1-800-972-6382 (outside the Washington D.C. area).

/Kenya A. McLaughlin/

Kenya A. McLaughlin
Petitions Attorney
Office of Petitions

JOHN S. PRATT, ESQ
KILPATRICK TOWNSEND & STOCKTON LLP
1100 PEACHTREE STREET
SUITE 2800
ATLANTA GA 30309

UNITED STATES PATENT AND TRADEMARK OFFICE

Commissioner for Patents
United States Patent and Trademark Office
P.O. Box 1450
Alexandria, VA 22313-1450
www.uspto.gov

STEPTOE & JOHNSON LLP
1330 CONNECTICUT AVENUE, N.W.
WASHINGTON DC 20036

MAILED

JUN 22 2011

OFFICE OF PETITIONS

In re Application of
Fine et al.
Application No. 13/ 094,535
Filed: April 26, 2011
Attorney Docket No. 16250.0025

ON PETITION

This is a decision on the petition under 37 CFR 1.102(c)(1), filed June 8, 2011, to make the above-identified application special based on applicant's age as set forth in M.P.E.P. § 708.02, Section IV.

The petition is **GRANTED**.

A grantable petition to make an application special under 37 CFR 1.102(c)(1) and MPEP § 708.02, Section IV: Applicant's Age must be accompanied by evidence showing that at least one of the applicants is 65 years of age, or more, such as a birth certificate or a statement by applicant. No fee is required

The instant petition includes a statement by applicant's attorney that applicant is 65 years of age and a statement (PTO/SB/130 form) by the applicant that applicant is 65 years of age. Accordingly, the above-identified application has been accorded "special" status.

Telephone inquiries concerning this decision should be directed to the undersigned at 571-272-7751. All other inquiries concerning either the examination or status of the application should be directed to the Technology Center.

The application is being referred to the Office of Patent Application Processing for further processing in accordance with this decision on petition.

/Joan Olszewski/
Joan Olszewski
Petitions Examiner
Office of Petitions

UNITED STATES PATENT AND TRADEMARK OFFICE

Commissioner for Patents
United States Patent and Trademark Office
P.O. Box 1450
Alexandria, VA 22313-1450
www.uspto.gov

STEPTOE & JOHNSON LLP
1330 CONNECTICUT AVENUE, N.W.
WASHINGTON DC 20036

MAILED

JUN 22 2011

OFFICE OF PETITIONS

In re Application of :
Fuller et al. :
Application No. 13/ 094,541 : ON PETITION
Filed: April 26, 2011
Attorney Docket No. 16250.0023 :
:

This is a decision on the petition under 37 CFR 1.102(c)(1), filed June 8, 2011, to make the above-identified application special based on applicant's age as set forth in M.P.E.P. § 708.02, Section IV.

The petition is **GRANTED**.

A grantable petition to make an application special under 37 CFR 1.102(c)(1) and MPEP § 708.02, Section IV: Applicant's Age must be accompanied by evidence showing that at least one of the applicants is 65 years of age, or more, such as a birth certificate or a statement by applicant. No fee is required

The instant petition includes a statement by applicant's attorney that applicant is 65 years of age and a statement (PTO/SB/130 form) by the applicant that applicant is 65 years of age. Accordingly, the above-identified application has been accorded "special" status.

Telephone inquiries concerning this decision should be directed to the undersigned at 571-272-7751. All other inquiries concerning either the examination or status of the application should be directed to the Technology Center.

The application is being referred to the Office of Patent Application Processing for further processing in accordance with this decision on petition.

/Joan Olszewski/
Joan Olszewski
Petitions Examiner
Office of Petitions

UNITED STATES PATENT AND TRADEMARK OFFICE

Commissioner for Patents
United States Patent and Trademark Office
P.O. Box 1450
Alexandria, VA 22313-1450
www.uspto.gov

Paper No.

HANLEY, FLIGHT & ZIMMERMAN, LLC
150 S. WACKER DRIVE
SUITE 2100
CHICAGO IL 60606

MAILED
DEC 20 2011
OFFICE OF PETITIONS

In re Application Of:	
Daniel Julio Montenegro	
Application No. 13/094,579	DECISION ON PETITION PURSUANT TO
Filed: April 26, 2011	37 C.F.R. § 1.47(b)
Attorney Docket No.	
20177/P02440	
Title: METHOD OF GAMING, A	
GAMING SYSTEM AND A GAME	
CONTROLLER	

This is in response to the petition pursuant to 37 C.F.R. § 1.47(b), filed on December 12, 2011.

This petition is **GRANTED**.

On April 26, 2011, this application was filed, identifying Daniel Julio Montenegro as the sole inventor. The application was deposited without an executed oath or declaration. On May 11, 2011, a "Notice to File Missing Parts of Nonprovisional Application - Filing Date Granted" was mailed, indicating that an executed declaration would be required, along with the surcharge associated with the late filing of the same.

A grantable petition under 37 C.F.R. § 1.47(b) requires:

(1) the petition fee of as set forth in 37 C.F.R. § 1.17(g);
(2) the surcharge as set forth in 37 C.F.R. § 1.16(f), if the petition is not filed at the time of filing the application;
(3) a statement of the last known address of each non-signing inventor;
(4) proof that either:

(a) a copy of the application was sent or given to each non-signing inventor for review and proof that each non-signing inventor refused to sign, or;
(b) proof that diligent efforts have been made to locate each non-signing inventor;

(5) proof that the Rule 1.47(b) applicant has sufficient proprietary interest in the subject matter to justify the filing of the application;
(6) proof of irreparable damage, and;
(7) an acceptable oath or declaration in compliance with 35 U.S.C. §§ 115 and 116 and 37 C.F.R. § 1.63.

With this petition, Petitioner has included, *inter alia*, the petition fee, a declaration that has been executed by a registered practitioner along with the surcharge that is associated with the late submission of the same, the last known address of the sole inventor,[1] proof that he was provided with a complete copy of the application,[2] proof that the Rule 1.47(b) applicant has sufficient proprietary interest in the subject matter to justify the filing of the application,[3] and proof of irreparable damage.[4]

Consequently, Petitioner has met requirements (1) - (7) of Rule 1.47(b).

The above-identified application and papers have been reviewed and found in compliance with 37 C.F.R. § 1.47(b). This application is hereby accorded Rule 1.47 status.

As provided in Rule 1.47, this Office will forward notice of this application's filing to the non-signing inventor at the address that appears on the declaration. Notice of the filing of this application will also be published in the Official Gazette.

The Office of Patent Application Processing (OPAP) will be notified of this decision so that the application may receive further processing.

---

1 Letter dated May 3, 2011, letter dated July 19, 2011, and the declaration.
2 See petition, pages 2-3.
3 See Rule 3.73(b) statement and Appendix C, entitled "confidentiality deed."
4 Petition, page 3.

The general phone number for OPAP is 571-272-4000. Telephone inquiries **regarding this decision** should be directed to the undersigned at (571) 272-3225.[5]

Paul Shanoski
Senior Attorney
Office of Petitions

5 Petitioner will note that all practice before the Office should be in writing, and the action of the Office will be based exclusively on the written record in the Office. See 37 C.F.R. § 1.2. As such, Petitioner is reminded that no telephone discussion may be controlling or considered authority for any further action(s) of Petitioner.

UNITED STATES PATENT AND TRADEMARK OFFICE

Commissioner for Patents
United States Patent and Trademark Office
P.O. Box 1450
Alexandria, VA 22313-1450
www.uspto.gov

Daniel Julio Montenegro
3 Embley Glade
Eneavour Hills
VIC 3802
AUSTRALIA

MAILED
DEC 20 2011
OFFICE OF PETITIONS

In re Application Of:
Daniel Julio Montenegro
Application No. 13/094,579
Filed: April 26, 2011
Attorney Docket No.
20177/P02440
Title: METHOD OF GAMING, A GAMING SYSTEM AND A GAME CONTROLLER

: LETTER

Dear Mr. Montenegro:

You are named as the sole inventor in the above-identified United States patent application filed under the provisions of 35 U.S.C. § 116 (United States Code) and 37 C.F.R. § 1.47(a), Rules of Practice in Patent Cases. Should a patent be granted on the application, you will be designated therein as the sole inventor.

As the sole inventor you are entitled to inspect any paper in the file wrapper of the application, order copies of all or any part thereof (at a prepaid cost per 37 C.F.R. § 1.19) or make your position of record in the application. Alternatively, you may arrange to do any of the preceding through a registered patent attorney or agent presenting written authorization from you. If you care to join the application, the attorney of record below would presumably assist you. Joining in the application would entail the filing of an appropriate oath or declaration by you pursuant to 37 C.F.R. § 1.63.

Telephone inquiries regarding this communication should be directed to the undersigned at (571) 272-3225. Requests for information regarding your application should be directed to the File Information Unit at (703) 308-2733. Information regarding how to pay for and order a copy of the application, or a specific paper in the application, should be directed to the Certification Division at (703) 308-9726 or 1-800-972-6382 (outside the Washington D.C. area).

/Paul Shanoski/
Paul Shanoski
Senior Attorney
Office of Petitions

cc: HANLEY, FLIGHT & ZIMMERMAN, LLC
150 S. WACKER DRIVE
SUITE 2100
CHICAGO IL 60606

UNITED STATES PATENT AND TRADEMARK OFFICE

Commissioner for Patents
United States Patent and Trademark Office
P.O. Box 1450

MAILED

JAN 30 2012

OFFICE OF PETITIONS

BLAKELY SOKOLOFF TAYLOR & ZAFMAN LLP
1279 OAKMEAD PARKWAY
SUNNYVALE CA 94085-4040

In re Application of : DECISION ON REQUEST TO
Akihisa SHIMIZU et al. : PARTICIPATE IN PPH PROGRAM
Application No. 13/094,680 : AND PETITION TO MAKE SPECIAL
Filed: April 26, 2011 : UNDER 37 CFR 1.102(a)
Atty. Docket No.: 6639P1186 :
For: WIRING DESIGN SUPPORT APPARATUS AND WIRING DESIGN SUPPORT METHOD

This is a decision on the request to participate in the Patent Prosecution Highway (PPH) program and the petition under 37 CFR 1.102(a), filed December 6, 2011 to make the above-identified application special.

The petition is **GRANTED**.

A grantable request to participate in the PPH (patent prosecution highway) program and petition to make special require:

(1) the U.S. application is a Paris Convention application which either validly claims priority under 35 U.S.C. 119(a) and 37 CFR 1.55 to one or more applications filed in the JPO (Japanese Patent Office) or claims priority to a PCT application that contains no priority claims. Alternatively, it can be a national stage application under the PCT which validly claims priority to an application filed in the JPO or claims priority to a PCT application that contains no priority claims. It can also be a "bypass application" filed under 35 U.S.C. 111(a) which validly claims benefit under 35 U.S.C. 120 to a PCT application, which PCT application validly claims priority to an application filed in the JPO or claims priority to a PCT application that contains no priority claims, or contains no priority claim;

(2) applicant must submit a copy of the allowable/patentable claim(s) from the JPO application(s) along with an English translation thereof and a statement that the English translation is accurate;

(3) all the claims in the U.S. application must sufficiently correspond or be amended to sufficiently correspond to the allowable/patentable claim(s) in the JPO application(s);

(4) examination of the U.S. application has not begun;

(5) applicant must submit a copy of all the office actions from each of the JPO application(s) containing the allowability/patentable claim(s) along with an English translation thereof and a statement that the English translation is accurate;

(6) applicant must submit an IDS listing the documents cited by the JPO examiner in the JPO office action along with copies of documents except U.S. patents or U.S. patent application publications; and

The request to participate in the PPH program and petition comply with the above requirements. Accordingly, the above-identified application has been accorded "special" status.

Telephone inquiries concerning this decision should be directed to Robert DeWitty, Petition Attorney, Office of Petitions at 571-272-8427.

All other inquiries concerning the examination or status of the application is accessible in the PAIR system at http://www.uspto.gov/ebc/index.html.

This application will be forwarded to Technology Center Art Unit 2825 for action on the merits commensurate with this decision once this application's formality reviews have been completed.

David Bucci
Petitions Examiner
Office of Petitions

UNITED STATES PATENT AND TRADEMARK OFFICE

UNITED STATES DEPARTMENT OF COMMERCE
United States Patent and Trademark Office
Address: COMMISSIONER FOR PATENTS
P.O. Box 1450
Alexandria, Virginia 22313-1450
www.uspto.gov

APPLICATION NO.	FILING DATE	FIRST NAMED INVENTOR	ATTORNEY DOCKET NO.	CONFIRMATION NO.
13/094,690	04/26/2011	Hiroshi Nakajima	6639P1198	1083

7590 01/20/2012

BLAKELY SOKOLOFF TAYLOR & ZAFMAN LLP
1279 OAKMEAD PARKWAY
SUNNYVALE, CA 94085-4040

EXAMINER	
ART UNIT	PAPER NUMBER
2196	
MAIL DATE	DELIVERY MODE
01/20/2012	PAPER

DECISION GRANTING PETITION UNDER 37 CFR 1.138(d)

The declaration of express abandonment is recognized

This is in response to the petition under 37 CFR 1.138(d), requesting for a refund of any previously paid search fee and excess claims fee in the above-identified application.

The petition is granted.

The express abandonment is recognized. Any previously paid search fee and excess claims fee are hereby refunded.

Telephone inquiries should be directed to the Office of Data Management at (571) 272-4200.

Patent Publication Branch
Office of Data Management

UNITED STATES PATENT AND TRADEMARK OFFICE

UNITED STATES DEPARTMENT OF COMMERCE
United States Patent and Trademark Office
Address: COMMISSIONER FOR PATENTS
P.O. Box 1450
Alexandria, Virginia 22313-1450
www.uspto.gov

APPLICATION NO.	FILING DATE	FIRST NAMED INVENTOR	ATTORNEY DOCKET NO.	CONFIRMATION NO.
13/094,693	04/26/2011	Guyselaine LECLERC	056274-4501	1091

90135 7590 02/17/2012

Telik, Inc.
c/o Foley & Lardner LLP
975 Page Mill Road
Palo Alto, CA 94304

EXAMINER	
ART UNIT	PAPER NUMBER
1621	

MAIL DATE	DELIVERY MODE
02/17/2012	PAPER

Please find below and/or attached an Office communication concerning this application or proceeding.

The time period for reply, if any, is set in the attached communication.

UNITED STATES PATENT AND TRADEMARK OFFICE

Commissioner for Patents
United States Patent and Trademark Office
P.O. Box 1450
Alexandria, VA 22313-1450
www.uspto.gov

Telik, Inc.
c/o Foley & Lardner LLP
975 Page Mill Road
Palo Alto CA 94304

Applicant: Leclerc et al.
Appl. No.: 13/094,693
Filing Date: April 26, 2011
Title: PREPARATION OF CRYSTALLINE EZATIOSTAT HYDROCHLORIDE ANSOLVATE FORM D
Attorney Docket No.: 056274-4501
Pub. No.: US 2011/0301376 A1
Pub. Date: December 8, 2011

This is a decision on the request for republication of patent application publication under 37 CFR 1.221(a), filed on February 8, 2012, for the above-identified application.

The request under 37 CFR 1.221(a) is DISMISSED.

37 CFR 1.221(a) requires "a copy of the application in compliance with the Office electronic filing system requirements and be accompanied by the publication fee set forth in § 1.18(d) and the processing fee set forth in § 1.17(i)". If the request for republication does not comply with the electronic filing system requirements, the republication will not take place and the publication fee set forth in § 1.18(d) will be refunded. The processing fee will be retained.

The applicant did not supply a copy of the application in compliance with the Office electronic filing system, as required by 37 CFR 1.221(a) because **the applicant submitted the papers as a "Document for an existing application", which are entered into the application file, and not as a "Pre-Grant Publication" submission**. The request for republication does not comply with the electronic filing system requirements, thus republication will not take place.

Any request for republication under 37 CFR 1.221(a), must be submitted via the EFS system, as a Pre-Grant publication submission and must include a copy of the application in compliance with the Office electronic filing system requirements. The applicant is directed to the following website for additional instructions on how to submit a Pre-Grant Publication submission via the electronic filing system:

http://www.uspto.gov/ebc/portal/efs/pgpub_quickstart.pdf

Any questions or requests for reconsideration of the decision should be addressed as follows:

By mail to: Mail Stop PGPUB
Commissioner for Patents
P.O. Box 1450
Alexandria, Va. 22313-1450

By facsimile: 571-273-8300

Telephone inquiries regarding this correspondence should be directed to The Office of Data Management at 571-272-4200.

Tammy J. Koontz
Office of Data Management
United States Patent & Trademark Office

UNITED STATES PATENT AND TRADEMARK OFFICE

UNITED STATES DEPARTMENT OF COMMERCE
United States Patent and Trademark Office
Address: COMMISSIONER FOR PATENTS
P.O. Box 1450
Alexandria, Virginia 22313-1450
www.uspto.gov

APPLICATION NO.	FILING DATE	FIRST NAMED INVENTOR	ATTORNEY DOCKET NO.	CONFIRMATION NO.
13/094,697	04/26/2011	Xiaoan Fan	HW 81365393AE2	1095

74365 7590 05/31/2011

Slater & Matsil, L.L.P.
17950 Preston Road, Suite 1000
Dallas, TX 75252

EXAMINER	
YAO, KWANG BIN	
ART UNIT	PAPER NUMBER
2473	

NOTIFICATION DATE	DELIVERY MODE
05/31/2011	ELECTRONIC

Please find below and/or attached an Office communication concerning this application or proceeding.

The time period for reply, if any, is set in the attached communication.

Notice of the Office communication was sent electronically on above-indicated "Notification Date" to the following e-mail address(es):

docketing@slater-matsil.com

UNITED STATES PATENT AND TRADEMARK OFFICE

Commissioner for Patents
United States Patent and Trademark Office
P.O. Box 1450
Alexandria, VA 22313-1450
www.uspto.gov

MAILED

MAY 27 2011

DIRECTOR OFFICE
TECHNOLOGY CENTER 2400

Ira S. Matsil
SLATER & MATSIL, L.L.P.
17950 Preston Road, Suite 1000
Dallas, TX 75252

In re Application of: FAN, Xiaoan et. al.
Serial No.: **13/094,697**
Filed: April 26, 2011
Docket: HW 81365393AE2
Title: METHOD AND APPARATUS FOR FEEDING BACK AND RECEIVING ACKNOWLEDGEMENT INFORMATION OF SEMI-PERSISTEN SCHEDULING DATA PACKETS

DECISION ON PETITION TO MAKE SPECIAL FOR NEW APPLICATION UNDER 37 C.F.R. § 1.102 & M.P.E.P. § 708.02

This is a decision on the petition filed on April 26, 2011 to make the above-identified application special for accelerated examination procedure under 37 C.F.R. § 1.102(d).

The petition to make the application special is **GRANTED**.

The application is eligible for accelerated examination and the petition complies with the conditions for granting the application special status pursuant to the "Change to Practice for Petitions in Patent Applications to Make Special and for Accelerated Examination" published June 26, 2006, in the Federal Register. (71 Fed. Reg. 36323).

The prosecution of the instant application will be conducted expeditiously according to the following guidelines.

1. The application will be docketed to an examiner and taken up for action within two weeks of the date of this decision.

2. Restriction Practice:
   If the examiner determines that the claims are not directed to a single invention, a telephone request to elect one single invention will be made pursuant to MPEP 812.01. As a prerequisite to the grant of this petition, the applicant has agreed to make an oral election, by telephone, without traverse. If the applicant refuses to make an election without traverse, or the examiner cannot reach the applicant after a reasonable effort, the examiner will treat the first claimed invention (invention defined by claim 1) as having being constructively elected without traverse for examination.

3. Office action:

If it is determined that, after appropriate consultation, there is a potential rejection or any other issue to be addressed, the examiner will telephone the applicant and arrange an interview to discuss and resolve the issue. An Office action, other than a Notice of Allowance and Fee(s) Due (Notice of Allowance), will not be issued unless either: 1) an interview was conducted but did not result in agreed to action that places the application in condition for allowance, or, 2) a determination is made that an interview would be unlikely to result in the application being placed in condition for allowance, and 3) an internal conference has been held to review any rejection of any claim.

4. Time for Reply:
An Office action other than a Notice of Allowance or a final Office action will set a shortened statutory period of one month or thirty days, whichever is longer, for reply with no extension of time available under 37 CFR 1.136(a). Failure to timely file a reply within this non-extendible period for reply will result in the abandonment of the application.

5. Reply by Applicant:
A timely reply to an Office action other than the Notice of Allowance must be submitted electronically via EFS or EFS-web and limited to addressing the rejections, objections and requirement made. Any amendment that attempts to: 1) add claims which would result in more than three pending independent claims or more than twenty pending total claims; 2) present claims not encompassed by the pre-examination search or an updated accelerated examination support document; or 3) present claims that are directed a non-elected invention or an invention other than that previously claimed and examined in the application, will be treated as not fully responsive and will not be entered.

For any amendment to the claims (including any new claim) that is not encompassed by the accelerated examination support document, applicant must provide an updated accelerated examination support document that encompasses the amended or new claims at the time of filing of the amendment.

To proceed expeditiously with the examination, it is recommended that a reply with amendments made to any claim or with any new claim being added be accompanied by an updated accelerated examination support document or a statement explaining how the amended or new claim is supported by the original accelerated examination support document.

6. Information Disclosure Statement (IDS):
Any IDS filed during prosecution must be submitted electronically via EFS or EFS-web, accompanied by an updated accelerated examination support document, and be in compliance with 37 CFR 1.97 and 1.98.

7. Post-Allowance Processing:

To expedite processing of the allowed application into a patent, the applicant must: 1) pay the required fees within one month of the date of the Notice of Allowance, and 2) not file any post allowance papers not required by the Office. In no event may the issue fee be paid and accepted later than three months from the date of the Notice of Allowance.

8. After-Final and Appeal Procedures:
To expedite prosecution, after receiving the final Office action, applicant must: 1) promptly file a notice of appeal, an appeal brief and appeal fees; and 2) not request a pre-appeal brief conference.

Any amendment, affidavit or other evidence filed after final Office action must comply with applicable rules and the requirements outlined in numbered paragraphs 5 and 6 above.

On appeal, the application will proceed according to normal appeal procedures. After appeal, the application will again be treated special.

9. Proceedings Outside the Normal Examination Process:
If the application becomes involved in a proceeding that is outside the normal examination process (e.g., a secrecy order, national security review, interference proceeding, petitions under 37 CFR 1.181, 182 or 183), the application will be treated special before and after such proceeding.

10. Final Disposition:
The twelve-month goal of this accelerated examination procedure ends with a final disposition. The mailing of a final Office action, a Notice of Allowance, the filing of a Notice of Appeal, or the filing of a Request for Continued Examination (RCE) is the final disposition.

If, during prosecution, a paper is not filed electronically using EFS-web, a reply is filed but is not fully responsive, the application is involved in an appeal, or a proceeding outside normal examination process, the application will still be examined expeditiously, however, the final disposition may occur more than twelve months from the filing of the application. In addition, Applicant is reminded that due to the dismissal of the previous petition submission, examination may not be completed within twelve months of the filing date of the application.

Any inquiry regarding this decision should be directed to Beatriz Prieto, Quality Assurance Specialist, at (571) 272-3902. A second point of Contact is Kim Huynh at (571)-272-4147.

/Beatriz Prieto/

Beatriz Prieto, Quality Assurance Specialist
Technology Center 2400
Networking, Multiplexing, Cable and Security

UNITED STATES PATENT AND TRADEMARK OFFICE

UNITED STATES DEPARTMENT OF COMMERCE
United States Patent and Trademark Office
Address: COMMISSIONER FOR PATENTS
P.O. Box 1450
Alexandria, Virginia 22313-1450
www.uspto.gov

APPLICATION NO.	FILING DATE	FIRST NAMED INVENTOR	ATTORNEY DOCKET NO.	CONFIRMATION NO.
13/094,801		Hee Chang KANG	BR112.KA006U	1333

89803 7590 05/02/2011
Echelon Law Group, PC
1919 Gallows Road., Suite 330
Vienna, VA 22182

EXAMINER	
ART UNIT	PAPER NUMBER
3723	

NOTIFICATION DATE	DELIVERY MODE
05/02/2011	ELECTRONIC

Please find below and/or attached an Office communication concerning this application or proceeding.

The time period for reply, if any, is set in the attached communication.

Notice of the Office communication was sent electronically on above-indicated "Notification Date" to the following e-mail address(es):

kevin.mun@echelaw.com
seungho.lee@echelaw.com
prosecution@echelaw.com

UNITED STATES PATENT AND TRADEMARK OFFICE

Commissioner for Patents
United States Patent and Trademark Office
P.O. Box 1450
Alexandria, VA 22313-1450
www.uspto.gov

Echelon Law Group, PC
1919 Gallows Road., Suite 330
Vienna VA 22182

In re Application of:
KANG, HEE CHANG
Application No.: 13/094,801
Filed: April 26, 2011
Docket: BR112.KA006U
Title: APPARATUS FOR CUTTING AND PROCESSING V-GROOVES

:: DECISION ON REQUEST TO PARTICIPATE IN PATENT PROSECUTION HIGHWAY PILOT PROGRAM AND PETITION TO MAKE SPECIAL UNDER 37 CFR 1.102(a)

This is a decision on the request to participate in the Patent Prosecution Highway (PPH) pilot program and the petition under 37 CFR 1.102(a), filed April 26, 2011 to make the above-identified application special. The required petition fee under 37 CFR 1.17(h) was charged to the deposit account as authorized.

The request and petition are granted

A grantable request to participate in the PPH pilot program and petition to make special require:

(1) The U.S. application must validly claim priority under 35 U.S.C. 119(a) to one or more applications filed in the KIPO;
(2) Applicant must submit a copy of the allowable/patentable claim(s) from the KIPO application(s) along with an English translation thereof and a statement that the English translation is accurate;
(3) All the claims in the U.S. application must sufficiently correspond or be amended to sufficiently correspond to the allowable/patentable claim(s) in the KIPO application(s);
(4) Examination of the U.S. application has not begun;
(5) Applicant must submit a copy of all the office actions from each of the KIPO application(s) containing the allowable/patentable claim(s) along with an English translation thereof and a statement that the English translation is accurate; and
(6) Applicant must submit an IDS listing the documents cited by the KIPO examiner in the KIPO office action along with copies of documents except U.S. patents or U.S. patent application publications.

In light of the petition being properly submitted, the request to participate in the PPH program and the petition comply with the above requirements. Accordingly, the above-identified application has been accorded "special" status.

The applicant is encouraged to cite and submit all relevant prior art references, if any, to facilitate examination in this application.

Other inquiries concerning the examination or status of the application should be directed to Joe Hail, the SPE of Art Unit 3732 at 571-272-4485 for Class 451/358 and also accessible in the PAIR system at http://www.uspto.gov/ebc.index.html.

All other inquiries concerning the examination or status of the application should be directed to the Patent Application Information Retrieval (PAIR) system.

This application is currently undergoing pre-examination process. This application will be forwarded and docketed to an examiner for action on the merits commensurate with this decision.

Telephone inquiries concerning this decision should be directed to Henry C. Yuen, at 571-272-4856.

The petition is **granted.**

/Henry C. Yuen/

_____

Henry C. Yuen, Special Programs Examiner
Technology Center 3700 – Mechanical Engineering,
Manufacturing and Products
571-272-4856

IN THE UNITED STATES PATENT AND TRADEMARK OFFICE

First Named Inventor: Tao ZHANG	)
Confirmation No.: 1430	)
	)
Serial No.: 13/094,853	)
	)
Filing Date: 04-27-2011	)
	)
Atty Docket No.: 243482-1 (30650-0029)	)

Commissioner for Patents
P.O. Box 1450
Alexandria, VA 22313-1450

Statement Concerning the Basis for the Special Status

SIR:

Applicant respectfully submits that Special Status is sought on the basis that the present invention materially contributes to the development of renewable energy resources or energy conservation.

Applicant respectfully submits that the present invention is directed to superconducting electrical machines with armature winding coils and other components made from a high temperature superconducting material that may be used in wind turbines. While wind power is considered one of the cleanest, most environmentally friendly energy sources presently available, the availability of wind energy as a viable power generating option heavily depends on the cost/benefit economics of wind energy. As such, it is important that the cost of producing the energy, including maintenance of the wind turbines, cannot outweigh the benefits. Thus, anything that increases the efficiency of a wind turbine favorably impacts the cost/benefit economics of wind energy and therefore enables the expanded use of wind energy over other, nonrenewable, means of energy generation.

Known generators include a field coil mounted about a rotor and armature winding coils mounted about a stator. Once a voltage is applied, a magnetic field couples the field coil and the armature winding coils. The magnitude of the magnetic field depends upon the amount of current passing through the field coil. The magnetic stress within the electrical machine translates to torque so as to result in the rotation of the rotor. The higher the magnetic field, the greater the torque per rotation for a given circumference of the armature winding coils.

Using field coils made from a superconducting material makes the electrical machine more compact, lightweight, and efficient due to the increased magnetic field strength caused by the superconducting material. Overall electrical machine performance also may be improved by increasing the current carrying capacity of the armature winding coils. Replacing the original copper coils with coils made from a superconducting material thus may significantly increase the overall power density by a factor of about two to five or more, and in turn, allow for the design of wind turbines which could generate even more renewable energy than those currently contemplated.

However, one issue with the use of known superconducting materials includes excessive alternating current losses induced by the exposure to a strong alternative magnetic field. Although certain types of high temperature superconducting materials generally have lower alternating current losses, adequate and somewhat complicated cooling systems must be provided to maintain the superconducting material within the desired operating temperature range. Moreover, different design and operational issues may be found with air gap based coils and with tooth-wound coils and the like. Therefore, in order to realize the increased efficiency of using superconducting materials in generators

for wind turbines, there needs to be an improved electrical machine that avoids large alternating current losses while providing a simplified cooling system.

The embodiments described in the present invention avoid large alternating current losses while providing a simplified cooling system in an electrical machine that may be used as a generator in a wind turbine. By easing two known difficulties with electric machines using superconducting materials, generators for wind turbines could substantially increase in efficiency, and thus generate more renewable power per wind turbine. The increased efficiency in generators for wind turbines using superconducting materials would favorably impact the cost/benefit economics of wind energy which in turn would promote increased use of this renewable energy source.

The undersigned attorney may be contacted at the number below to facilitate the resolution of any matters. Please charge any fees that are incurred in connection with this Statement to deposit account no. 09-0470.

Respectfully submitted,

General Electric Company

By: /Allison W Mages/
Allison Weiner Mages
Reg. No. 57,275

Dated:August 3, 2011

GE Global Patent Operation
2 Corporate Drive, Suite 248
Shelton, CT 06484
203-944-6730

IN THE UNITED STATES PATENT AND TRADEMARK OFFICE

First Named Inventor: Tao ZHANG	)
Confirmation No.: 1430	)
	)
Serial No.: 13/094,853	)
	)
Filing Date: 04-27-2011	)
	)
Atty Docket No.: 243482-1 (30650-0029)	)

Commissioner for Patents
P.O. Box 1450
Alexandria, VA 22313-1450

Statement Concerning the Basis for the Special Status

SIR:

Applicant respectfully submits that Special Status is sought on the basis that the present invention materially contributes to the development of renewable energy resources or energy conservation.

Applicant respectfully submits that the present invention is directed to superconducting electrical machines with armature winding coils and other components made from a high temperature superconducting material that may be used in wind turbines. While wind power is considered one of the cleanest, most environmentally friendly energy sources presently available, the availability of wind energy as a viable power generating option heavily depends on the cost/benefit economics of wind energy. As such, it is important that the cost of producing the energy, including maintenance of the wind turbines, cannot outweigh the benefits. Thus, anything that increases the efficiency of a wind turbine favorably impacts the cost/benefit economics of wind energy and

therefore enables the expanded use of wind energy over other, nonrenewable, means of energy generation.

Presently, large commercial wind turbines in existence and in development are capable of generating from about 1.5 to about 12.5 megawatts of power using generators known in the art. These known generators include a field coil mounted about a rotor and armature winding coils mounted about a stator. Once a voltage is applied, a magnetic field couples the field coil and the armature winding coils. The magnitude of the magnetic field depends upon the amount of current passing through the field coil. The magnetic stress within the electrical machine translates to torque so as to result in the rotation of the rotor. The higher the magnetic field, the greater the torque per rotation for a given circumference of the armature winding coils.

Using field coils made from a superconducting material makes the electrical machine more compact, lightweight, and efficient due to the increased magnetic field strength caused by the superconducting material. Overall electrical machine performance also may be improved by increasing the current carrying capacity of the armature winding coils. Replacing the original copper coils with coils made from a superconducting material thus may significantly increase the overall power density by a factor of about two to five or more, and in turn, allow for the design of wind turbines which could generate even more renewable energy than those currently contemplated.

However, one issue with the use of known superconducting materials includes excessive alternating current losses induced by the exposure to a strong

alternative magnetic field. Although certain types of high temperature superconducting materials generally have lower alternating current losses, adequate and somewhat complicated cooling systems must be provided to maintain the superconducting material within the desired operating temperature range. Moreover, different design and operational issues may be found with air gap based coils and with tooth-wound coils and the like. Therefore, in order to realize the increased efficiency of using superconducting materials in generators for wind turbines, there needs to be an improved electrical machine that avoids large alternating current losses while providing a simplified cooling system.

The embodiments described in the present invention avoid large alternating current losses while providing a simplified cooling system in an electrical machine that may be used as a generator in a wind turbine. By easing two known difficulties with electric machines using superconducting materials, generators for wind turbines could substantially increase in efficiency, and thus generate more renewable power per wind turbine. The increased efficiency in generators for wind turbines using superconducting materials would favorably impact the cost/benefit economics of wind energy which in turn would promote increased use of this renewable energy source.

The undersigned attorney may be contacted at the number below to facilitate the resolution of any matters. Please charge any fees that are incurred in connection with this Statement to deposit account no. 09-0470.

Respectfully submitted,
General Electric Company
By: /Allison W Mages/

Allison Weiner Mages
Reg. No. 57,275

Dated:July 29, 2011

GE Global Patent Operation
2 Corporate Drive, Suite 248
Shelton, CT 06484
203-944-6730

Doc Code: PET.GREEN
Document Description: Petition for Green Tech Pilot

PTO/SB/420 (03-11)

PETITION TO MAKE SPECIAL UNDER THE GREEN TECHNOLOGY PILOT PROGRAM

Attorney Docket Number: 243482-1 (30650-0029)	Application Number (if known): 13/094,853	Filing date: 04-27-2011

First Named Inventor: Tao ZHANG

Title: ELECTRICAL MACHINE WITH SUPERCONDUCTING ARMATURE COILS AND OTHER COMPONENTS

APPLICANT HEREBY REQUESTS TO PARTICIPATE IN THE GREEN TECHNOLOGY PILOT PROGRAM FOR THE ABOVE-IDENTIFIED APPLICATION. See Instruction Sheet on page 2.

This petition must be timely filed electronically using the USPTO electronic filing system, EFS-Web.

1. By filing this petition:

   Applicant is requesting early publication: Applicant hereby requests early publication under 37 CFR 1.219 and the publication fee set forth in 37 CFR 1.18(d) accompanies this request.

2. By filing this petition: applicant is agreeing to make an election without traverse in a telephonic interview and elect an invention that meets the eligibility requirements for the Green Technology Pilot Program, if the Office determines that the claims are not obviously directed to a single invention. See Instruction Sheet.

3. This request is accompanied by statements of special status for the eligibility requirement.

4. The application contains no more than three (3) independent claims and twenty (20) total claims.

5. The application does not contain any multiple dependent claims.

6. Other attachments: Statement Concerning the Basis for the Special Status

Signature /Allison W. Mages/	Date July 29, 2011
Name (Print/Typed) Allison W. Mages	Registration Number 57,275

Note: Signatures of all the inventors or assignees of record of the entire interest or their representative(s) are required in accordance with 37 CFR 1.33 and 11.18. Please see 37 CFR 1.4(d) for the form of the signature. If necessary, submit multiple forms for more than one signature, see below.*

☐ *Total of _____ forms are submitted.

If you need assistance in completing the form, call 1-800-PTO-9199 and select option 2.

UNITED STATES PATENT AND TRADEMARK OFFICE

UNITED STATES DEPARTMENT OF COMMERCE
United States Patent and Trademark Office
Address: COMMISSIONER FOR PATENTS
P.O. Box 1450
Alexandria, Virginia 22313-1450
www.uspto.gov

APPLICATION NO.	FILING DATE	FIRST NAMED INVENTOR	ATTORNEY DOCKET NO.	CONFIRMATION NO.
13/094,853	04/27/2011	Tao Zhang	243482-1 (30650-0029)	1430

6147 7590 09/22/2011

GENERAL ELECTRIC COMPANY
GLOBAL RESEARCH
ONE RESEARCH CIRCLE
BLDG. K1-3A59
NISKAYUNA, NY 12309

EXAMINER	
LEUNG, QUYEN PHAN	
ART UNIT	**PAPER NUMBER**
2834	

NOTIFICATION DATE	DELIVERY MODE
09/22/2011	ELECTRONIC

Please find below and/or attached an Office communication concerning this application or proceeding.

The time period for reply, if any, is set in the attached communication.

Notice of the Office communication was sent electronically on above-indicated "Notification Date" to the following e-mail address(es):

ldocket@crd.ge.com
wahld@ge.com
haeckl@ge.com

UNITED STATES PATENT AND TRADEMARK OFFICE

Commissioner for Patents
United States Patent and Trademark Office
P.O. Box 1450
Alexandria, VA 22313-1450
www.uspto.gov

GENERAL ELECTRIC COMPANY
GLOBAL RESEARCH
ONE RESEARCH CIRCLE
BLDG. K1-3A59
NISKAYUNA NY 12309

In re Application of	:	
Zhang et al.	:	DECISION ON PETITION
Application No. 13/094853	:	TO MAKE SPECIAL UNDER
Filed: April 27, 2011	:	THE GREEN TECHNOLOGY
Attorney Docket No. 243482-1 (30650-0029)	:	PILOT PROGRAM

This is a decision on the petition under 37 CFR 1.102, filed on August 3, 2011, to make the above-identified application special under the pilot program for applications pertaining to Green Technologies as set forth 74 Federal Register Notice 64666 (December 8, 2009) and amended by 75 Federal Register Notice 28554 (May 21, 2010) and 75 Federal Register Notice 69049 (November 10, 2010).

The petition is **DISMISSED**.

If reconsideration of this decision is desired, a petition for reconsideration must be filed within ONE (1) MONTH OR THIRTY (30) DAYS from the mail date of this decision, whichever is longer. No extension of this time limit can be granted under 37 CFR 1.136(a) or (b). The petition for reconsideration should include an exhaustive attempt to provide the lacking item(s) noted below, since, after a decision on the petition for reconsideration, no further reconsideration or review of the matter will be undertaken by the Director.

A grantable petition to make an application special under 37 CFR 1.102 and the pilot program as set forth in 74 FR 64666 must be directed to a nonprovisional application filed under 35 USC 111(a) or be a national stage entry under 35 USC 371, exclusive of any reissue applications and be filed prior to the date of the notice, December 8, 2009.

In order to qualify for special status, the following requirements must be met. 1) The application must have no more than 3 independent claims and no more than 20 total claims. 2) The application must not contain any multiple dependent claims. 3) The petition must state the basis for seeking special status, i.e., the claimed invention either: A) materially enhances the quality of the environment or B) materially contributes to: i) the discovery or development of renewable energy resources, ii) the more efficient utilization and conservation of energy resources, or iii) greenhouse gas emission reduction. 4) If the disclosure is not clear on its face that the claimed invention materially contributes under category (A) or (B), the petition must be accompanied by a statement by the applicant, assignee, or an attorney/agent registered to practice before the

Office explaining how the materiality standard is met. 5) A statement that applicant will agree to make an election without traverse in a telephonic interview if a restriction requirement is made by the examiner. 6) The petition to make special must be filed electronically. 7) The petition must be filed at least one day prior to the date that a first Office Action appears in the Patent Application Information Retrieval (PAIR) system. 8) The petition must be accompanied by a request for early publication in compliance with 37 CFR 1.219 and include the publication fee as set forth in 37 CFR 1.18(d).

The requirement for a fee for consideration of the petition to make special for applications pertaining to Green Technologies has been waived.

The petition lacks item 4.

In regard to item 4, applicant's statement pertaining to how the materiality standard is met does not satisfy the requirements for this pilot. The instant petition includes a statement identifying the basis for the special status as having claims which materially contributes to the development of renewable energy resources. The materiality standard does not permit an applicant to speculate as to how a hypothetical end-user might specially apply the claimed invention in a manner that could contribute to development of renewable energy resources. Any argument that the claimed invention can be used for more efficient utilization of renewable energy resources would be considered speculative as to how a hypothetical end-user might specially apply to the claimed superconducting electrical device, particularly since a renewable energy resource is NOT claimed. The claimed device could be used for non-renewable sources of energy, like a generator or as an energy consumer, such as a motor.

Any reconsideration of this decision should be submitted through the USPTO electronic filing system, EFS-Web, and selecting the document description of "Petition for Green Tech Pilot" on the EFS-Web screen.

Telephone inquiries concerning this decision should be directed to Colleen Dunn at 571-272-1170.

The application is being forwarded to the appropriate Technology Center Art Unit for action on the merits commensurate with this decision.

/Colleen Dunn/

Colleen Dunn
Quality Assurance Specialist
Technology Center 2800

UNITED STATES PATENT AND TRADEMARK OFFICE

Commissioner for Patents
United States Patent and Trademark Office
P.O. Box 1450
Alexandria, VA 22313-1450
www.uspto.gov

TEXAS INSTRUMENTS INCORPORATED
P O BOX 655474, M/S 3999
DALLAS TX 75265

MAILED
AUG 17 2011
OFFICE OF PETITIONS

In Re application of
Ming-Yeh Chuang
Application No. 13/094,955
Filed: April 27, 2011
Attorney Docket No. TI-68493

ON PETITION

This is a decision on the petition under 37 CFR 1.59(b), filed July 19, 2011 to expunge information from the above identified application.

The petition is **granted**.

Petitioner requests that certain documents filed July 8, 2011 be expunged from the record. Petitioner states that the information submitted was erroneously filed in the instant application and was clearly identified as belonging in another application.

A review of the file shows the information was clearly intended to be filed in an unrelated application.

The expunged material has been removed from the official file.

In accordance with MPEP 724.05(III), no petition is needed since the papers in question were clearly identified for a different application. Therefore, the petition fee is refunded to petitioner.

Petitioner also requests that a $130 fee paid with the misfiled papers be refunded. Office records show this fee has already been refunded.

Telephone inquiries relative to this decision should be directed to Carl Friedman at (571) 272-6842.

Carl Friedman
Petitions Examiner
Office of Petitions

Doc Code: PET.GREEN
Document Description: Petition for Green Tech Pilot

PTO/SB/420 (05-10)
Approved for use through 05/31/2010. OMB 0651-0062
U.S. Patent and Trademark Office; U.S. DEPARTMENT OF COMMERCE
Under the Paperwork Reduction Act of 1995, no persons are required to respond to a collection of information unless it displays a valid OMB control number.

PETITION TO MAKE SPECIAL UNDER THE GREEN TECHNOLOGY PILOT PROGRAM

Attorney Docket Number:	SUS-017/7301032001	Application Number (if known):	13/094,960	Filing date: April 27, 2011
First Named Inventor:	Benjamin Bollinger			
Title:	HEAT EXCHANGE WITH COMPRESSED GAS IN ENERGY-STORAGE SYSTEMS			

APPLICANT HEREBY REQUESTS TO PARTICIPATE IN THE GREEN TECHNOLOGY PILOT PROGRAM FOR THE ABOVE-IDENTIFIED APPLICATION. See Instruction Sheet on page 2.

This petition must be timely filed electronically using the USPTO electronic filing system, EFS-Web.

1. By filing this petition:

   Applicant is requesting early publication: Applicant hereby requests early publication under 37 CFR 1.219 and the publication fee set forth in 37 CFR 1.18(d) accompanies this request.

2. By filing this petition: applicant is agreeing to make an election without traverse in a telephonic interview and elect an invention that meets the eligibility requirements set forth in the notice titled "Pilot Program for Green Technologies Including Greenhouse Gas Reduction," as modified by the notice titled "Elimination of Classification Requirement in the Green Technology Pilot Program," each of which was published in the Federal Register, if the Office determines that the claims are not obviously directed to a single invention.

3. This request is accompanied by statements of special status for the eligibility requirement.

4. The application contains no more than three (3) independent claims and twenty (20) total claims.

5. The application does not contain any multiple dependent claims

6. Other attachments: Preliminary Amendment
   Statement of Special Status

Signature	/Matthew T. Currie/	Date	April 28, 2011
Name (Print/Typed)	Matthew T. Currie	Registration Number	58,533

Note: Signatures of all the inventors or assignees of record of the entire interest or their representative(s) are required in accordance with 37 CFR 1.33 and 11.18. Please see 37 CFR 1.4(d) for the form of the signature. If necessary, submit multiple forms if more than one signature, see below.*

☐ *Total of 1 forms are submitted.

IN THE UNITED STATES PATENT AND TRADEMARK OFFICE

APPLICANTS:	Bollinger *et al.*		
SERIAL NO.:	13/094,960	GROUP NO.:	Not yet assigned
FILING DATE:	April 27, 2011	EXAMINER:	Not yet assigned
TITLE:	HEAT EXCHANGE WITH COMPRESSED GAS IN ENERGY-STORAGE SYSTEMS		

Commissioner for Patents
P.O. Box 1450
Alexandria, VA 22313-1450

STATEMENT OF SPECIAL STATUS IN SUPPORT OF PETITION TO MAKE SPECIAL UNDER THE GREEN TECHNOLOGY PILOT PROGRAM

In accordance with the Federal Register notices published December 8, 2009, May 21, 2010, and November 10, 2010, Applicants hereby request to participate in the Green Technology Pilot Program for the above-identified application. Applicants submit that the invention claimed in the above-identified application materially contributes to the development of renewable energy resources and the conservation of energy resources at least because the invention solves a persistent problem with intermittent energy-generation systems (e.g., wind and solar renewable energy) by providing systems for storing and recovering the energy from these sources, thereby making them deployable on a widespread and practical basis – thereby enhancing and promoting the deployment of such systems. Thus, the claimed invention directly contributes to the conservation of energy resources by increasing the practicality and acceptance of renewable energy sources, thereby enabling them to replace fossil-fuel-dependent energy sources.

Specifically, the claimed energy storage and recovery method is useful for the conversion of clean energy stored in the form of compressed gas into, e.g., usable electricity, and vice versa. Energy is stored via gas compression or recovered via gas expansion within a cylinder assembly, and the gas is transferred out of the cylinder assembly after compression or into the cylinder assembly prior to expansion. The gas is thermally conditioned outside of the cylinder assembly during the transfer(s), thus improving overall efficiency, as significant temperature change of the gas (and concomitant energy loss) may otherwise result outside of the cylinder assembly, e.g., during storage in a storage reservoir, even if the gas is thermally conditioned in the cylinder

assembly during the compression or expansion. Thus, the claimed invention increases efficiency of the energy recovery and storage by preventing energy loss outside of the compression/expansion cylinder. As demonstrated by dependent claim 83, the claimed method also encompasses storage of energy originating from an intermittent renewable energy source of wind or solar energy and recovery of energy when the intermittent renewable energy source is nonfunctional. Thus, power demands are addressed consistently, regardless of the energy output of the renewable energy source at any particular time.

Applicants believe no additional fees are necessitated by the filing of this paper. However, if any additional fee is due, please charge said fee occasioned by this paper to our Deposit Account No. 50-4047.

Respectfully submitted,

Date: April 28, 2011
Reg. No. 58,533

Electronic Signature: /Matthew T. Currie/
Matthew T. Currie
Attorney for Applicants
Bingham McCutchen LLP
One Federal Street
Boston, Massachusetts 02110

Tel. No.: (617) 951-8293
Fax No.: (617) 951-8736

UNITED STATES PATENT AND TRADEMARK OFFICE

UNITED STATES DEPARTMENT OF COMMERCE
United States Patent and Trademark Office
Address: COMMISSIONER FOR PATENTS
P.O. Box 1450
Alexandria, Virginia 22313-1450
www.uspto.gov

APPLICATION NO.	FILING DATE	FIRST NAMED INVENTOR	ATTORNEY DOCKET NO.	CONFIRMATION NO.
13/094,960	04/27/2011	Benjamin R. Bollinger	SUS-017/7301032001	1651

23517 7590 09/07/2011

BINGHAM MCCUTCHEN LLP
2020 K Street, N.W.
Intellectual Property Department
WASHINGTON, DC 20006

EXAMINER	
ART UNIT	PAPER NUMBER
3748	

MAIL DATE	DELIVERY MODE
09/07/2011	PAPER

Please find below and/or attached an Office communication concerning this application or proceeding.

The time period for reply, if any, is set in the attached communication.

UNITED STATES PATENT AND TRADEMARK OFFICE

Commissioner for Patents
United States Patent and Trademark Office
P.O. Box 1450
Alexandria, VA 22313-1450
www.uspto.gov

BINGHAM MCCUTCHEN LLP
2020 K Street, N.W.
Intellectual Property Department
WASHINGTON DC 20006

In re Application of :
BOLLINGER, BENJAMIN R. . et al :
Application No. 13/094,960 :
Filed: April 27, 2011 :
Attorney Docket No. SUS-017/7301032001 :

DECISION ON PETITION
TO MAKE SPECIAL UNDER
THE GREEN TECHNOLOGY
PILOT PROGRAM

This is a decision on the renewed petition under 37 CFR 1.102, filed April 28, 2011 to make the above-identified application special under the pilot program for applications pertaining to Green Technologies as set forth in 74 Federal Register Notice 64666 (December 8, 2009) and amended by 75 Federal Register Notice 28554 (May 21, 2010) and 75 Federal Register Notice 69049 (November 10, 2010).

The petition is **granted.**

A grantable petition to make an application special under 37 CFR 1.102 and the pilot program as set forth in 74 FR 64666 must be directed to a nonprovisional application filed under 35 USC 111(a) or be a national stage entry under 35 USC 371, exclusive of any reissue applications.

In order to qualify for special status, the following requirements must be met. 1) The application must have no more than 3 independent claims and no more than 20 total claims. 2) The application must not contain any multiple dependent claims. 3) The petition must state the basis for seeking special status, i.e., the claimed invention either: A) materially enhances the quality of the environment or B) materially contributes to: i) the discovery or development of renewable energy resources, ii) the more efficient utilization and conservation of energy resources, or iii) greenhouse gas emission reduction. 4) If the disclosure is not clear on its face that the claimed invention materially contributes under category (A) or (B), the petition must be accompanied by a statement by the applicant, assignee, or an attorney/agent registered to practice before the Office explaining how the materiality standard is met. 5) A statement that applicant will agree to make an election without traverse in a telephonic interview if a restriction requirement is made by the examiner. 6) The petition to make special must be filed electronically. 7) The petition must be filed at least one day prior to the date that a first Office Action appears in the Patent Application Information Retrieval (PAIR) system. 8) The petition must be accompanied by a request for early publication in compliance with 37 CFR 1.219 and include the publication fee as set forth in 37 CFR 1.18(d).

The requirement for a fee for consideration of the petition to make special for applications pertaining to Green Technologies has been waived.

The instant petition complies with items 1 – 8 above. Accordingly, the above-identified application has been accorded "special" status.

Telephone inquires concerning this decision should be directed to Henry C. Yuen at 571-272-4856.

This application will be forwarded to the Technology Center Art Unit 3748 for action on the merits commensurate with this decision.

/Henry C. Yuen/

Henry C. Yuen
Quality Assurance Specialist
Technology Center TC 3700

Doc Code: PET.GREEN
Document Description: Petition for Green Tech Pilot

PTO/SB/420 (05-10)
Approved for use through 01/31/2011. OMB 0651-0062
U.S. Patent and Trademark Office; U. S. DEPARTMENT OF COMMERCE
Under the Paperwork Reduction Act of 1995, no persons are required to respond to a collection of information unless it displays a valid OMB control number.

PETITION TO MAKE SPECIAL UNDER THE GREEN TECHNOLOGY PILOT PROGRAM

Attorney Docket Number: 82760-5	Application Number (if known): TBD	Filing date: April 27, 2011

First Named Inventor: Andrew D.E. MACINTOSH

Title: METHOD OF RECLAIMING CARBONACEOUS MATERIALS FROM SCRAP TIRES AND PRODUCTS DERIVED THEREFROM

APPLICANT HEREBY REQUESTS TO PARTICIPATE IN THE GREEN TECHNOLOGY PILOT PROGRAM FOR THE ABOVE-IDENTIFIED APPLICATION. **See Instruction Sheet on page 2.**

This petition must be timely filed electronically using the USPTO electronic filing system, EFS-Web.

1. By filing this petition:

   Applicant is requesting early publication: Applicant hereby requests early publication under 37 CFR 1.219 and the publication fee set forth in 37 CFR 1.18(d) accompanies this request.

2. By filing this petition: applicant is agreeing to make an election without traverse in a telephonic interview and elect an invention that meets the eligibility requirements set forth in the notice titled "Pilot Program for Green Technologies Including Greenhouse Gas Reduction," as modified by the notice titled "Elimination of Classification Requirement in the Green Technology Pilot Program," each of which was published in the Federal Register, if the Office determines that the claims are not obviously directed to a single invention.

3. This request is accompanied by statements of special status for the eligibility requirement.

4. The application contains no more than three (3) independent claims and twenty (20) total claims.

5. The application does not contain any multiple dependent claims.

6. Other attachments: _____

Signature /Yasin Bismilla/	Date April 27, 2011
Name (Print/Typed) Yasin Bismilla	Registration Number 64756

Note: *Signatures of all the inventors or assignees of record of the entire interest or their representative(s) are required in accordance with 37 CFR 1.33 and 11.18. Please see 37 CFR 1.4(d) for the form of the signature. If necessary, submit multiple forms for more than one signature, see below*.*

☐ *Total of _____ forms are submitted.

The information is required to obtain or retain a benefit by the public which is to file (and by the USPTO to process) an application. Confidentiality is governed by 35 U.S.C. 122 and 37 CFR 1.11 and 1.14. This collection is estimated to take 1 hour to complete, including gathering, preparing, and submitting the completed application form to the USPTO. Time will vary depending upon the individual case. Any comments on the amount of time you require to complete this form and/or suggestions for reducing this burden, should be sent to the Chief Information Officer, U.S. Patent and Trademark Office, U.S. Department of Commerce, P.O. Box 1450, Alexandria, VA 22313-1450. DO NOT SEND FEES OR COMPLETED FORMS TO THIS ADDRESS. **SEND TO: Commissioner for Patents, P.O. Box 1450, Alexandria, VA 22313-1450.**

If you need assistance in completing the form, call 1-800-PTO-9199 and select option 2.

PTO/SB/420 (05-10)
Approved for use through 01/31/2011. OMB 0651-0062
U.S. Patent and Trademark Office; U. S. DEPARTMENT OF COMMERCE
Under the Paperwork Reduction Act of 1995, no persons are required to respond to a collection of information unless it displays a valid OMB control number.

Instruction Sheet for Petition to Make Special Under the Green Technology Pilot Program

(Not to be Submitted to the USPTO)

***The following is a summary of the requirements** (for more information see the notices (i) "Pilot Program for Green Technologies Including Greenhouse Gas Reduction" and (ii) "Elimination of Classification Requirement in the Green Technology Pilot Program," available on the USPTO web site at http://www.uspto.gov/patents/init_events/green_tech.jsp):*

(1) The application must be a non-reissue, non-provisional utility application filed under 35 U.S.C. 111(a), or an international application that has entered the national stage in compliance with 35 U.S.C. 371. The application must be previously filed before the publication date of the notice cited above. Reexamination proceedings are excluded from this pilot program.

(2) The application must contain three or fewer independent claims and twenty or fewer total claims. The application must not contain any multiple dependent claims. For an application that contains more than three independent claims or twenty total claims, or multiple dependent claims, applicant must file a preliminary amendment in compliance with 37 CFR 1.121 to cancel the excess claims and/or the multiple dependent claims at the time the petition to make special is filed.

(3) The claims must be directed to a single invention that materially enhances the quality of the environment, or that materially contributes to: (1) the discovery or development of renewable energy resources; (2) the more efficient utilization and conservation of energy resources; or (3) green house gas emission reduction (see the eligibility requirements of sections II and III of the notice (i) cited above). The petition must include a statement that, if the USPTO determines that the claims are directed to multiple inventions (e.g., in a restriction requirement), applicant will agree to make an election without traverse in a telephonic interview, and elect an invention that meets the eligibility requirements in section II or III of the notice (i) cited above.

(4) The petition to make special must be timely filed electronically using the USPTO electronic filing system, EFS-Web, and selecting the document description of "Petition for Green Tech Pilot" on the EFS-Web screen. Applicant should use form PTO/SB/420, which is available as a Portable Document Format (PDF) fillable form in EFS-Web and on the USPTO Web site.

(5) The petition to make special must be filed at least one day prior to the date that a first Office action (which may be an Office action containing only a restriction requirement) appears in the Patent Application Information Retrieval (PAIR) system. Applicant may check the status of the application using PAIR.

(6) The petition to make special must be accompanied by a request for early publication in compliance with 37 CFR 1.219 and the publication fee set forth in 37 CFR 1.18(d).

Privacy Act Statement

The **Privacy Act of 1974 (P.L. 93-579)** requires that you be given certain information in connection with your submission of the attached form related to a patent application or patent. Accordingly, pursuant to the requirements of the Act, please be advised that: (1) the general authority for the collection of this information is 35 U.S.C. 2(b)(2); (2) furnishing of the information solicited is voluntary; and (3) the principal purpose for which the information is used by the U.S. Patent and Trademark Office is to process and/or examine your submission related to a patent application or patent. If you do not furnish the requested information, the U.S. Patent and Trademark Office may not be able to process and/or examine your submission, which may result in termination of proceedings or abandonment of the application or expiration of the patent.

The information provided by you in this form will be subject to the following routine uses:

1. The information on this form will be treated confidentially to the extent allowed under the Freedom of Information Act (5 U.S.C. 552) and the Privacy Act (5 U.S.C 552a). Records from this system of records may be disclosed to the Department of Justice to determine whether disclosure of these records is required by the Freedom of Information Act.
2. A record from this system of records may be disclosed, as a routine use, in the course of presenting evidence to a court, magistrate, or administrative tribunal, including disclosures to opposing counsel in the course of settlement negotiations.
3. A record in this system of records may be disclosed, as a routine use, to a Member of Congress submitting a request involving an individual, to whom the record pertains, when the individual has requested assistance from the Member with respect to the subject matter of the record.
4. A record in this system of records may be disclosed, as a routine use, to a contractor of the Agency having need for the information in order to perform a contract. Recipients of information shall be required to comply with the requirements of the Privacy Act of 1974, as amended, pursuant to 5 U.S.C. 552a(m).
5. A record related to an International Application filed under the Patent Cooperation Treaty in this system of records may be disclosed, as a routine use, to the International Bureau of the World Intellectual Property Organization, pursuant to the Patent Cooperation Treaty.
6. A record in this system of records may be disclosed, as a routine use, to another federal agency for purposes of National Security review (35 U.S.C. 181) and for review pursuant to the Atomic Energy Act (42 U.S.C. 218(c)).
7. A record from this system of records may be disclosed, as a routine use, to the Administrator, General Services, or his/her designee, during an inspection of records conducted by GSA as part of that agency's responsibility to recommend improvements in records management practices and programs, under authority of 44 U.S.C. 2904 and 2906. Such disclosure shall be made in accordance with the GSA regulations governing inspection of records for this purpose, and any other relevant (*i.e.*, GSA or Commerce) directive. Such disclosure shall not be used to make determinations about individuals.
8. A record from this system of records may be disclosed, as a routine use, to the public after either publication of the application pursuant to 35 U.S.C. 122(b) or issuance of a patent pursuant to 35 U.S.C. 151. Further, a record may be disclosed, subject to the limitations of 37 CFR 1.14, as a routine use, to the public if the record was filed in an application which became abandoned or in which the proceedings were terminated and which application is referenced by either a published application, an application open to public inspection or an issued patent.
9. A record from this system of records may be disclosed, as a routine use, to a Federal, State, or local law enforcement agency, if the USPTO becomes aware of a violation or potential violation of law or regulation.

UNITED STATES PATENT AND TRADEMARK OFFICE

UNITED STATES DEPARTMENT OF COMMERCE
United States Patent and Trademark Office
Address: COMMISSIONER FOR PATENTS
P.O. Box 1450
Alexandria, Virginia 22313-1450
www.uspto.gov

APPLICATION NO.	FILING DATE	FIRST NAMED INVENTOR	ATTORNEY DOCKET NO.	CONFIRMATION NO.
13/095,026	04/27/2011	Andrew D. E. MacIntosh	82760-5	1776

35222 7590 05/26/2011

McMillan LLP
BROOKFIELD PLACE, Suite 4400
181 BAY STREET
TORONTO, ON M5J 2T3
CANADA

EXAMINER	
ART UNIT	PAPER NUMBER
1765	

NOTIFICATION DATE	DELIVERY MODE
05/26/2011	ELECTRONIC

Please find below and/or attached an Office communication concerning this application or proceeding.

The time period for reply, if any, is set in the attached communication.

Notice of the Office communication was sent electronically on above-indicated "Notification Date" to the following e-mail address(es):

yasin.bismilla@mcmillan.ca
USPTOMail@mcmillan.ca
usptomail@langmichener.ca

UNITED STATES PATENT AND TRADEMARK OFFICE

Commissioner for Patents
United States Patent and Trademark Office
P.O. Box 1450
Alexandria, VA 22313-1450
www.uspto.gov

McMillan LLP
BROOKFIELD PLACE, Suite 4400
181 BAY STREET
TORONTO ON M5J 2T3 CA CANADA

MAY 26 2011

In re Application of :
MacIntosh et al. : DECISION ON PETITION
Application No. 13/095,026 : TO MAKE SPECIAL UNDER
Filed: 4/27/2011 : THE GREEN TECHNOLOGY
Attorney Docket No. **82760-5** : PILOT PROGRAM

This is a decision on the petition under 37 CFR 1.102, filed 4/27/2011, to make the above-identified application special under the pilot program for applications pertaining to Green Technologies as set forth in 74 Federal Register Notice 64666 (December 8, 2009) and amended by 75 Federal Register Notice 28554 (May 21, 2010) and 75 Federal Register Notice 69049 (November 10, 2010).

The petition is **GRANTED**.

A grantable petition to make an application special under 37 CFR 1.102 and the pilot program as set forth in 74 FR 64666 must be directed to a nonprovisional application filed under 35 USC 111(a) or be a national stage entry under 35 USC 371, exclusive of any reissue applications.

In order to qualify for special status, the following requirements must be met. 1) The application must have no more than 3 independent claims and no more than 20 total claims. 2) The application must not contain any multiple dependent claims. 3) The petition must state the basis for seeking special status, i.e., the claimed invention either: A) materially enhances the quality of the environment or B) materially contributes to: i) the discovery or development of renewable energy resources, ii) the more efficient utilization and conservation of energy resources, or iii) greenhouse gas emission reduction. 4) If the disclosure is not clear on its face that the claimed invention materially contributes under category (A) or (B), the petition must be accompanied by a statement by the applicant, assignee, or an attorney/agent registered to practice before the Office explaining how the materiality standard is met. 5) A statement that applicant will agree to make an election without traverse in a telephonic interview if a restriction requirement is made by the examiner. 6) The petition to make special must be filed electronically. 7) The petition must be filed at least one day prior to the date that a first Office Action appears in the Patent Application Information Retrieval (PAIR) system. 8) The petition must be accompanied by a

request for early publication in compliance with 37 CFR 1.219 and include the publication fee as set forth in 37 CFR 1.18(d).

The requirement for a fee for consideration of the petition to make special for applications pertaining to Green Technologies has been waived.

The instant petition complies with items 1 – 8 above. Accordingly, the above-identified application has been accorded "special" status.

Telephone inquires concerning this decision should be directed to Tom Dunn at 571-272-1171.

The application is being forwarded to the Technology Center Art Unit 1765 for action on the merits commensurate with this decision.

/Tom Dunn/

Tom Dunn
Quality Assurance Specialist
Technology Center 1700

UNITED STATES PATENT AND TRADEMARK OFFICE

UNITED STATES DEPARTMENT OF COMMERCE
United States Patent and Trademark Office
Address: COMMISSIONER FOR PATENTS
P.O. Box 1450
Alexandria, Virginia 22313-1450
www.uspto.gov

APPLICATION NO.	FILING DATE	FIRST NAMED INVENTOR	ATTORNEY DOCKET NO.	CONFIRMATION NO.
13/095,049	04/27/2011	Damir R. Shiyafetdinov	031185-00031	1826

38485 7590 05/11/2011

ARENT FOX LLP
1675 BROADWAY
NEW YORK, NY 10019

EXAMINER	
HWANG, JOON H	
ART UNIT	**PAPER NUMBER**
2447	

NOTIFICATION DATE	DELIVERY MODE
05/11/2011	ELECTRONIC

Please find below and/or attached an Office communication concerning this application or proceeding.

The time period for reply, if any, is set in the attached communication.

Notice of the Office communication was sent electronically on above-indicated "Notification Date" to the following e-mail address(es):

NYIPDocket@arentfox.com
Patent_Mail@arentfox.com

UNITED STATES PATENT AND TRADEMARK OFFICE

Commissioner for Patents
United States Patent and Trademark Office
P.O. Box 1450
Alexandria, VA 22313-1450
www.uspto.gov

MAILED

MAY 11 2011

DIRECTOR OFFICE
TECHNOLOGY CENTER 2400

Michael Fainberg
ARENT FOX LLP
1675 BROADWAY
NEW YORK NY 10019

In re Application of: SHIYAFETDINOV et. al.
Serial No.: 13/095,049
Filed: April 27, 2011
Docket: 031185-00031
Title: SYSTEM AND METHOD FOR REMOTE ADMINISTRATION OF COMPUTER NETWORK

DECISION ON PETITION TO MAKE SPECIAL FOR NEW APPLICATION UNDER 37 C.F.R. § 1.102 & M.P.E.P. § 708.02

This is a decision on the petition filed on April 27, 2011 to make the above-identified application special for accelerated examination procedure under 37 C.F.R. § 1.102(d).

The petition to make the application special is **GRANTED**.

The application is eligible for accelerated examination and the petition complies with the conditions for granting the application special status pursuant to the "Change to Practice for Petitions in Patent Applications to Make Special and for Accelerated Examination" published June 26, 2006, in the Federal Register. (71 Fed. Reg. 36323).

The prosecution of the instant application will be conducted expeditiously according to the following guidelines.

1. The application will be docketed to an examiner and taken up for action within two weeks of the date of this decision.

2. Restriction Practice:
   If the examiner determines that the claims are not directed to a single invention, a telephone request to elect one single invention will be made pursuant to MPEP 812.01. As a prerequisite to the grant of this petition, the applicant has agreed to make an oral election, by telephone, without traverse. If the applicant refuses to make an election without traverse, or the examiner cannot reach the applicant after a reasonable effort, the examiner will treat the first claimed invention (invention defined by claim 1) as having being constructively elected without traverse for examination.

3. Office action:

If it is determined that, after appropriate consultation, there is a potential rejection or any other issue to be addressed, the examiner will telephone the applicant and arrange an interview to discuss and resolve the issue. An Office action, other than a Notice of Allowance and Fee(s) Due (Notice of Allowance), will not be issued unless either: 1) an interview was conducted but did not result in agreed to action that places the application in condition for allowance, or, 2) a determination is made that an interview would be unlikely to result in the application being placed in condition for allowance, and 3) an internal conference has been held to review any rejection of any claim.

4. Time for Reply:
An Office action other than a Notice of Allowance or a final Office action will set a shortened statutory period of one month or thirty days, whichever is longer, for reply with no extension of time available under 37 CFR 1.136(a). Failure to timely file a reply within this non-extendible period for reply will result in the abandonment of the application.

5. Reply by Applicant:
A timely reply to an Office action other than the Notice of Allowance must be submitted electronically via EFS or EFS-web and limited to addressing the rejections, objections and requirement made. Any amendment that attempts to: 1) add claims which would result in more than three pending independent claims or more than twenty pending total claims; 2) present claims not encompassed by the pre-examination search or an updated accelerated examination support document; or 3) present claims that are directed a non-elected invention or an invention other than that previously claimed and examined in the application, will be treated as not fully responsive and will not be entered.

For any amendment to the claims (including any new claim) that is not encompassed by the accelerated examination support document, applicant must provide an updated accelerated examination support document that encompasses the amended or new claims at the time of filing of the amendment.

To proceed expeditiously with the examination, it is recommended that a reply with amendments made to any claim or with any new claim being added be accompanied by an updated accelerated examination support document or a statement explaining how the amended or new claim is supported by the original accelerated examination support document.

6. Information Disclosure Statement (IDS):
Any IDS filed during prosecution must be submitted electronically via EFS or EFS-web, accompanied by an updated accelerated examination support document, and be in compliance with 37 CFR 1.97 and 1.98.

7. Post-Allowance Processing:

To expedite processing of the allowed application into a patent, the applicant must: 1) pay the required fees within one month of the date of the Notice of Allowance, and 2) not file any post allowance papers not required by the Office. In no event may the issue fee be paid and accepted later than three months from the date of the Notice of Allowance.

8. After-Final and Appeal Procedures:
To expedite prosecution, after receiving the final Office action, applicant must: 1) promptly file a notice of appeal, an appeal brief and appeal fees; and 2) not request a pre-appeal brief conference.

Any amendment, affidavit or other evidence filed after final Office action must comply with applicable rules and the requirements outlined in numbered paragraphs 5 and 6 above.

On appeal, the application will proceed according to normal appeal procedures. After appeal, the application will again be treated special.

9. Proceedings Outside the Normal Examination Process:
If the application becomes involved in a proceeding that is outside the normal examination process (e.g., a secrecy order, national security review, interference proceeding, petitions under 37 CFR 1.181, 182 or 183), the application will be treated special before and after such proceeding.

10. Final Disposition:
The twelve-month goal of this accelerated examination procedure ends with a final disposition. The mailing of a final Office action, a Notice of Allowance, the filing of a Notice of Appeal, or the filing of a Request for Continued Examination (RCE) is the final disposition.

If, during prosecution, a paper is not filed electronically using EFS-web, a reply is filed but is not fully responsive, the application is involved in an appeal, or a proceeding outside normal examination process, the application will still be examined expeditiously, however, the final disposition may occur more than twelve months from the filing of the application. In addition, Applicant is reminded that due to the dismissal of the previous petition submission, examination may not be completed within twelve months of the filing date of the application.

Any inquiry regarding this decision should be directed to Beatriz Prieto, Quality Assurance Specialist, at (571) 272-3902. A second point of Contact is Kim Huynh at (571)-272-4147.

/Beatriz Prieto/

Beatriz Prieto, Quality Assurance Specialist
Technology Center 2400
Networking, Multiplexing, Cable and Security

UNITED STATES PATENT AND TRADEMARK OFFICE

UNITED STATES DEPARTMENT OF COMMERCE
United States Patent and Trademark Office
Address: COMMISSIONER FOR PATENTS
P.O. Box 1450
Alexandria, Virginia 22313-1450
www.uspto.gov

APPLICATION NO.	FILING DATE	FIRST NAMED INVENTOR	ATTORNEY DOCKET NO.	CONFIRMATION NO.
13/095,132	04/27/2011	Tatsuo NAGASHIMA	380171US99	1982

7590 03/07/2012

OBLON, SPIVAK, MCCLELLAND MAIER & NEUSTADT, L.L.P.
1940 DUKE STREET
ALEXANDRIA, VA 22314

EXAMINER	
ART UNIT	PAPER NUMBER
1725	
NOTIFICATION DATE	DELIVERY MODE
03/07/2012	ELECTRONIC

DECISION GRANTING PETITION UNDER 37 CFR 1.138(d)

The declaration of express abandonment is recognized

This is in response to the petition under 37 CFR 1.138(d), requesting for a refund of any previously paid search fee and excess claims fee in the above-identified application.

The petition is granted.

The express abandonment is recognized. Any previously paid search fee and excess claims fee are hereby refunded.

Telephone inquiries should be directed to the Office of Data Management at (571) 272-4200.

Patent Publication Branch
Office of Data Management

Doc Code: PET.GREEN
Document Description: Petition for Green Tech Pilot

PTO/SB/420 (03-11)

PETITION TO MAKE SPECIAL UNDER THE GREEN TECHNOLOGY PILOT PROGRAM

Attorney Docket Number: 39605-214952	Application Number (if known): 13/095,179	Filing date: 04/27/2011

First Named Inventor: Patrick Chapman

Title: METHOD AND SYSTEM FOR CONTROLLING A MULTI-STAGE POWER INVERTER

APPLICANT HEREBY REQUESTS TO PARTICIPATE IN THE GREEN TECHNOLOGY PILOT PROGRAM FOR THE ABOVE-IDENTIFIED APPLICATION. See Instruction Sheet on page 2.

This petition must be timely filed electronically using the USPTO electronic filing system, EFS-Web.

1. By filing this petition:

   Applicant is requesting early publication: Applicant hereby requests early publication under 37 CFR 1.219 and the publication fee set forth in 37 CFR 1.18(d) accompanies this request.

2. By filing this petition: applicant is agreeing to make an election without traverse in a telephonic interview and elect an invention that meets the eligibility requirements for the Green Technology Pilot Program, if the Office determines that the claims are not obviously directed to a single invention. See Instruction Sheet.

3. This request is accompanied by statements of special status for the eligibility requirement.

4. The application contains no more than three (3) independent claims and twenty (20) total claims.

5. The application does not contain any multiple dependent claims.

6. Other attachments: STATEMENTS OF SPECIAL STATUS

Signature /Glen M. Kellett/	Date 05/16/2011
Name (Print/Typed) Glen M. Kellett	Registration Number 60,202

Note: *Signatures of all the inventors or assignees of record of the entire interest or their representative(s) are required in accordance with 37 CFR 1.33 and 11.18. Please see 37 CFR 1.4(d) for the form of the signature. If necessary, submit multiple forms for more than one signature, see below*.*

☐ *Total of _____ forms are submitted.

If you need assistance in completing the form, call 1-800-PTO-9199 and select option 2.

UNITED STATES PATENT AND TRADEMARK OFFICE

UNITED STATES DEPARTMENT OF COMMERCE
United States Patent and Trademark Office
Address: COMMISSIONER FOR PATENTS
P.O. Box 1450
Alexandria, Virginia 22313-1450
www.uspto.gov

APPLICATION NO.	FILING DATE	FIRST NAMED INVENTOR	ATTORNEY DOCKET NO.	CONFIRMATION NO.
13/095,179	04/27/2011	Patrick Chapman	39605-214952	2088

23643 7590 07/28/2011
BARNES & THORNBURG LLP
11 SOUTH MERIDIAN
INDIANAPOLIS, IN 46204

EXAMINER	
ART UNIT	PAPER NUMBER
2838	

NOTIFICATION DATE	DELIVERY MODE
07/28/2011	ELECTRONIC

Please find below and/or attached an Office communication concerning this application or proceeding.

The time period for reply, if any, is set in the attached communication.

Notice of the Office communication was sent electronically on above-indicated "Notification Date" to the following e-mail address(es):

indocket@btlaw.com

UNITED STATES PATENT AND TRADEMARK OFFICE

Commissioner for Patents
United States Patent and Trademark Office
P.O. Box 1450
Alexandria, VA 22313-1450
www.uspto.gov

BARNES & THORNBURG LLP
11 SOUTH MERIDIAN
INDIANAPOLIS IN 46204

In re Application of	:	
Patrick CHAPMAN	:	DECISION ON PETITION
Application No. 13/095179	:	TO MAKE SPECIAL UNDER
Filed: April 27, 2011	:	THE GREEN TECHNOLOGY
Attorney Docket No. 39605-214952	:	PILOT PROGRAM

This is a decision on the petition under 37 CFR 1.102, filed on May 16, 2011, to make the above-identified application special under the pilot program for applications pertaining to Green Technologies as set forth 74 Federal Register Notice 64666 (December 8, 2009) and amended by 75 Federal Register Notice 28554 (May 21, 2010) and 75 Federal Register Notice 69049 (November 10, 2010).

The petition is **GRANTED**.

A grantable petition to make an application special under 37 CFR 1.102 and the pilot program as set forth in 74 FR 64666 must be directed to a nonprovisional application filed under 35 USC 111(a) or be a national stage entry under 35 USC 371, exclusive of any reissue applications.

In order to qualify for special status, the following requirements must be met. 1) The application must have no more than 3 independent claims and no more than 20 total claims. 2) The application must not contain any multiple dependent claims. 3) The petition must state the basis for seeking special status, i.e., the claimed invention either: A) materially enhances the quality of the environment or B) materially contributes to: i) the discovery or development of renewable energy resources, ii) the more efficient utilization and conservation of energy resources, or iii) greenhouse gas emission reduction. 4) If the disclosure is not clear on its face that the claimed invention materially contributes under category (A) or (B), the petition must be accompanied by a statement by the applicant, assignee, or an attorney/agent registered to practice before the Office explaining how the materiality standard is met. 5) A statement that applicant will agree to make an election without traverse in a telephonic interview if a restriction requirement is made by the examiner. 6) The petition to make special must be filed electronically. 7) The petition must be filed at least one day prior to the date that a first Office Action appears in the Patent Application Information Retrieval (PAIR) system. 8) The petition must be accompanied by a request for early publication in compliance with 37 CFR 1.219 and include the publication fee as set forth in 37 CFR 1.18(d).

The requirement for a fee for consideration of the petition to make special for applications pertaining to Green Technologies has been waived.

The instant petition complies with items 1 – 8 above. Accordingly, the above-identified application has been accorded "special" status.

Telephone inquires concerning this decision should be directed to Colleen Dunn at 571-272-1170.

The application is being forwarded to the appropriate Technology Center Art Unit for action on the merits commensurate with this decision.

For Colleen Dunn
Quality Assurance Specialist
Technology Center 2800

UNITED STATES PATENT AND TRADEMARK OFFICE

Commissioner for Patents
United States Patent and Trademark Office
P.O. Box 1450
Alexandria, VA 22313-1450
www.uspto.gov

Wood, Herron & Evans, LLP (Vestas Wind Systems)
441 Vine Street
2700 Carew Tower
Cincinnati OH 45202

MAILED
DEC 13 2011
OFFICE OF PETITIONS

In re Application of :
Nieuwenhuizen :
Application No. 13/095,305 : DECISION REFUSING STATUS
Filed: April 27, 2011 : UNDER 37 CFR 1.47(b)
Attorney Docket No. **VWS-156CO** :
For: **WIND TURBINE WITH LOW ELECTROMAGNETIC RADIATION**

This is a decision on the petition under 37 CFR 1.47(b), filed November 17, 2011.

The petition under 37 CFR 1.47(b) is **dismissed.**

Any request for reconsideration under this decision must be submitted within TWO (2) MONTHS from the mail date of this decision. Extensions of time under 37 CFR 1.136(a) are permitted. Failure to respond will result in the abandonment of this application. Any response should be titled "Request for Reconsideration of Petition Under 37 CFR 1.47(b).

The above-identified application was filed on April 27, 2011, and was not accompanied by a properly executed declaration under 37 CFR 1.63. A Notice to File Missing Parts of Non-Provisional Application was mailed May 10, 2011, requiring a properly executed declaration, and surcharge. The instant petition was filed November 17, 2011, with an extension of time within the fifth month.

A grantable petition under 37 CFR 1.47(b) requires:

(1) proof that the non-signing inventor(s) cannot be reached or refuses to sign the oath or declaration after having been presented with the application papers (specification, claims, and drawings).

(2) an acceptable oath or declaration in compliance with 35 U.S.C. §§ 115 and 116;

(3) the petition fee,

(4) a statement of the last known address of the non-signing inventor,

(5) proof of proprietary interest, and

(6) a showing (statement) that such action is necessary to preserve the rights of the parties or to prevent irreparable damage.

The instant petition lacks item (2) set forth above.

As to item (2), the papers filed with the petition indicate that the invention disclosed in the subject application is assigned to Vestas Wind Systems A/S. Accordingly, the petitioner is not simply a 37 CFR 1.47(b) applicant, but an assignee. Thus, the declaration filed with the instant petition cannot be accepted until the assignee demonstrates that it has the power to prosecute the application. Section 409.03(b) of the *Manual of Patent Examining Procedure* provides, in pertinent part, that, "[w]here the oath or declaration is being signed on behalf of an assignee, see MPEP 324." Section 324 of the Manual of Patent Examining Procedure cites 37 CFR 3.71(c) which states that, "[a]n assignee becomes of record either in a national patent application or a reexamination proceeding by filing a statement in compliance with 3.73(b) that is signed by a party who is authorized to act on behalf of the assignee." Petitioner should note that 37 CFR 3.73 requires that before an assignee can take action in a patent matter, the assignee must establish ownership of the patent property in accordance with 37 CFR 3.73(b)(1)(i) or (ii). No statement or certificate meeting the requirements of 37 CFR 3.73 was found with the petition. Petitioner must properly establish ownership of the patent property before the assignee will be granted authority under 37 CFR 1.47(b) to prosecute the application. Form PTO/SB/96 is enclosed for petitioner's convenience.

Deposit account 23-3000 will be charged $200.00 for the instant petition fee.

Further correspondence with respect to this matter should be addressed as follows:

By mail: Mail Stop Petitions
Commissioner for Patents
P.O. Box 1450
Alexandria, VA 22313-1450

By FAX: (571) 273-8300
Attn: Office of Petitions

Telephone inquiries concerning this decision should be directed to the undersigned at (571) 272-3222.

/Kenya A. McLaughlin/

Kenya A. McLaughlin
Petitions Attorney
Office of Petitions

Enclosure: Form PTO/SB/96

UNITED STATES PATENT AND TRADEMARK OFFICE

Commissioner for Patents
United States Patent and Trademark Office
P.O. Box 1450
Alexandria, VA 22313-1450
www.uspto.gov

MAILED

FEB 14 2012

OFFICE OF PETITIONS

Wood, Herron & Evans, LLP (Vestas Wind Systems)
441 Vine Street
2700 Carew Tower
Cincinnati OH 45202

In re Application of :
Nieuwenhuizen :
Application No. 13/095,305 : DECISION ACCORDING STATUS
Filed: April 27, 2011 : UNDER 37 CFR 1.47(b)
Attorney Docket No. VWS-156CO :
For: WIND TURBINE WITH LOW ELECTROMAGNETIC RADIATION

This is in response to the renewed petition under 37 CFR 1.47(b), filed January 31, 2012.

The petition is **GRANTED**.

The above-identified application and papers have been reviewed and found in compliance with 37 CFR 1.47(b). This application is hereby accorded Rule 1.47(b) status.

The above-identified application was filed on April 27, 2011, and was not accompanied by a properly executed declaration under 37 CFR 1.63. A Notice to File Missing Parts of Non-Provisional Application was mailed May 10, 2011, requiring a properly executed declaration, and surcharge. A petition under 37 CFR 1.47(b) was filed November 17, 2011, with an extension of time within the fifth month. The petition as dismissed by a decision mailed December 13, 2011.

By the instant petition and evidentiary documents, petitioner has established that the 37 CFR 1.47(b) applicant has sufficient proprietary interest to proceed with prosecution of the application without the joint inventor.

As provided in Rule 1.47(c), this Office will forward notice of this application's filing to the non-signing inventor at the address given in the petition. Notice of the filing of this application will also be published in the Official Gazette.

Deposit account 23-3000 was overcharged for the instant petition which is $200.00, rather than $400.00. The deposit account will be refunded $200.00, accordingly.

This application will be forwarded to the Office of Patent Application Processing for further review.

Telephone inquiries concerning this decision should be directed to the undersigned at (571) 272-3222.

/Kenya A. McLaughlin/

Kenya A. McLaughlin
Petitions Attorney
Office of Petitions

UNITED STATES PATENT AND TRADEMARK OFFICE

Commissioner for Patents
United States Patent and Trademark Office
P.O. Box 1450
Alexandria, VA 22313-1450
www.uspto.gov

John Nieuwenhuizen
Kirkeskovvei 21
DK-8700 Horsens
DENMARK

MAILED
FEB 14 2012
OFFICE OF PETITIONS

In re Application of :
Nieuwenhuizen :
Application No. 13/095,305 : LETTER
Filed: April 27, 2011 :
Attorney Docket No. **VWS-156CO** :
For: **WIND TURBINE WITH LOW ELECTROMAGNETIC RADIATION**

Dear Mr. Nieuwenhuizen:

You are named as a joint inventor in the above-identified United States patent application filed under the provisions of 35 U.S.C. 116 (United States Code) and 37 CFR 1.47(b), Rules of Practice in Patent Cases. Should a patent be granted on the application you will be designated therein as a joint inventor.

As a joint inventor, you are entitled to inspect any paper in the file wrapper of the application, order copies of all or any part thereof (at a prepaid cost per 37 CFR 1.19) or make your position of record in the application. Alternatively, you may arrange to do any of the preceding through a registered patent attorney or agent presenting written authorization from you. If you care to join the application, counsel of record (see below) would presumably assist you. Joining in the application would entail the filing of an appropriate oath or declaration by you pursuant to 37 CFR 1.63.

Telephone inquiries regarding this communication should be directed to Petitions Attorney Kenya A. McLaughlin at (571) 272-3222. Requests for information regarding your application should be directed to the File Information Unit at (703) 308-2733. Information regarding how to pay for and order a copy of the application, or a specific paper in the application, should be directed to Certification Division at (703) 308-9726 or 1-800-972-6382 (outside the Washington D.C. area).

/Kenya a. McLaughlin/

Kenya A. McLaughlin
Petitions Attorney
Office of Petitions

Wood, Herron & Evans, LLP (Vestas Wind Systems)
441 Vine Street
2700 Carew Tower
Cincinnati OH 45202

Doc Code: PPH.PCT.652
Document Description: Petition to make special under PCT-Patent Pros Hwy

PTO/SB/20PCT-EP (05-10)
Approved for use through 01/31/2012. OMB 0651-0058
U.S. Patent and Trademark Office; U. S. DEPARTMENT OF COMMERCE
Under the Paperwork Reduction Act of 1995, no persons are required to respond to a collection of information unless it displays a valid OMB control number.

REQUEST FOR PARTICIPATION IN THE PATENT COOPERATION TREATY - PATENT PROSECUTION HIGHWAY (PCT-PPH) PILOT PROGRAM BETWEEN THE EUROPEAN PATENT OFFICE (EPO) AND THE USPTO

Application No:	Pending	Filing date:	April 27, 2011
First Named Inventor:	Thor Endre		
Title of the Invention:	Switch Device And A Switchgear Provided Therewith		

THIS REQUEST FOR PARTICIPATION IN THE PCT-PPH PILOT PROGRAM ALONG WITH THE REQUIRED DOCUMENTS MUST BE SUBMITTED VIA EFS-WEB. INFORMATION REGARDING EFS-WEB IS AVAILABLE AT HTTP://WWW.USPTO.GOV/EBC/EFS_HELP.HTML

APPLICANT HEREBY REQUESTS PARTICIPATION IN THE PCT-PPH PROGRAM AND PETITIONS TO MAKE THE ABOVE-IDENTIFIED APPLICATION SPECIAL UNDER THE PCT-PPH PROGRAM.

The above-identified application is (1) a national stage entry of the corresponding PCT application, or (2) a national stage entry of another PCT application which claims priority to the corresponding PCT application, or (3) a national application that claims domestic/ foreign priority to the corresponding PCT application, or (4) a national application which forms the basis for the priority claim in the corresponding PCT application, or (5) a continuing application of a U.S. application that satisfies one of (1) to (4) above, or (6) a U.S. application that claims domestic benefit to a U.S. provisional application which forms the basis for the priority claim in the corresponding PCT application.

The corresponding PCT application number(s) is/are: PCT/EP2009/063664

The international filing date of the corresponding PCT application(s) is/are: October 19, 2009

I. List of Required Documents:

a. **A copy of the latest international work product (WO/ISA, WO/IPEA, or IPER) in the above–identified corresponding PCT application(s)**

☒ Is attached

☐ Is not attached because the document is already in the U.S. application.

b. **A copy of all claims which were indicated as having novelty, inventive step and industrial applicability in the above-identified corresponding PCT application(s).**

☒ Is attached.

☐ Is not attached because the document is already in the U.S. application.

c. **English translations of the documents in a. and b. above are attached (if the documents are not in the English language). A statement that the English translation is accurate is attached for the document in b. above.**

This collection of information is required by 35 U.S.C. 119, 37 CFR 1.55, and 37 CFR 1.102(d). The information is required to obtain or retain a benefit by the public, which is to file (and by the USPTO to process) an application. Confidentiality is governed by 35 U.S.C. 122 and 37 CFR 1.11 and 1.14. This collection is estimated to take 2 hours to complete, including gathering, preparing, and submitting the completed application form to the USPTO. Time will vary depending upon the individual case. Any comments on the amount of time you require to complete this form and/or suggestions for reducing this burden should be sent to the Chief Information Officer, U.S. Patent and Trademark Office, U.S. Department of Commerce, P.O. Box 1450, Alexandria, VA 22313-1450. DO NOT SEND FEES OR COMPLETED FORMS TO THIS ADDRESS.

PTO/SB/20PCT-EP (05-10)
Approved for use through 01/31/2012. OMB 0651-0058
U.S.Patent and Trademark Office; U.S. DEPARTMENT OF COMMERCE
Under the Paperwork Reduction Act of 1995, no persons are required to respond to a collection of information unless it displays a valid OMB control number.

REQUEST FOR PARTICIPATION IN THE PCT-PPH PILOT PROGRAM BETWEEN THE EPO AND THE USPTO

(continued)

Application No.:	Pending
First Named Inventor:	Thor Endre

d. **(1) An information disclosure statement listing the documents cited in the international work products (ISR, WO/ISA, WO/IPEA, IPER) of the corresponding PCT application.**

☒ Is attached

☐ Has already been filed in the above-identified U.S. application on _____

(2) Copies of all documents (except) for U.S. patents or U.S. patent application publications)

☒ Are attached.

☐ Have already been filed in the above-identified U.S. application on _____

II. Claims Correspondence Table:

Claims in US Application	Patentable Claims in the corresponding PCT Application	Explanation regarding the correspondence
1	1	Corresponding claim (same)
2	2	Corresponding claim (same)
3	3	Corresponding claim (single dependency)
4	4	Corresponding claim (single dependency)
5	5	Corresponding claim (single dependency)
6	6	Corresponding claim (same)
7	7	Corresponding claim (single dependency)
8	8	Corresponding claim (same)
9	9	Corresponding claim (single dependency)
10	10	Corresponding claim (single dependency)
11	11	Corresponding claim (single dependency)
12	12	Corresponding claim (single dependency)
13	13	Corresponding claim (single dependency)
14	14	Corresponding claim (same)
15	15	Corresponding claim (single dependency)
16	16	Corresponding claim (same)

III. All the claims in the US application sufficiently correspond to the patentable claims in the corresponding PCT application.

Signature /Wesley W. Whitmyer, Jr./	Date April 27, 2011
Name (Print/Typed) Wesley W. Whitmyer, Jr.	Registration Number 33,558

Privacy Act Statement

The **Privacy Act of 1974 (P.L. 93-579)** requires that you be given certain information in connection with your submission of the attached form related to a patent application or patent. Accordingly, pursuant to the requirements of the Act, please be advised that: (1) the general authority for the collection of this information is 35 U.S.C. 2(b)(2); (2) furnishing of the information solicited is voluntary; and (3) the principal purpose for which the information is used by the U.S. Patent and Trademark Office is to process and/or examine your submission related to a patent application or patent. If you do not furnish the requested information, the U.S. Patent and Trademark Office may not be able to process and/or examine your submission, which may result in termination of proceedings or abandonment of the application or expiration of the patent.

The information provided by you in this form will be subject to the following routine uses:

1. The information on this form will be treated confidentially to the extent allowed under the Freedom of Information Act (5 U.S.C. 552) and the Privacy Act (5 U.S.C 552a). Records from this system of records may be disclosed to the Department of Justice to determine whether disclosure of these records is required by the Freedom of Information Act.
2. A record from this system of records may be disclosed, as a routine use, in the course of presenting evidence to a court, magistrate, or administrative tribunal, including disclosures to opposing counsel in the course of settlement negotiations.
3. A record in this system of records may be disclosed, as a routine use, to a Member of Congress submitting a request involving an individual, to whom the record pertains, when the individual has requested assistance from the Member with respect to the subject matter of the record.
4. A record in this system of records may be disclosed, as a routine use, to a contractor of the Agency having need for the information in order to perform a contract. Recipients of information shall be required to comply with the requirements of the Privacy Act of 1974, as amended, pursuant to 5 U.S.C. 552a(m).
5. A record related to an International Application filed under the Patent Cooperation Treaty in this system of records may be disclosed, as a routine use, to the International Bureau of the World Intellectual Property Organization, pursuant to the Patent Cooperation Treaty.
6. A record in this system of records may be disclosed, as a routine use, to another federal agency for purposes of National Security review (35 U.S.C. 181) and for review pursuant to the Atomic Energy Act (42 U.S.C. 218(c)).
7. A record from this system of records may be disclosed, as a routine use, to the Administrator, General Services, or his/her designee, during an inspection of records conducted by GSA as part of that agency's responsibility to recommend improvements in records management practices and programs, under authority of 44 U.S.C. 2904 and 2906. Such disclosure shall be made in accordance with the GSA regulations governing inspection of records for this purpose, and any other relevant (*i.e.*, GSA or Commerce) directive. Such disclosure shall not be used to make determinations about individuals.
8. A record from this system of records may be disclosed, as a routine use, to the public after either publication of the application pursuant to 35 U.S.C. 122(b) or issuance of a patent pursuant to 35 U.S.C. 151. Further, a record may be disclosed, subject to the limitations of 37 CFR 1.14, as a routine use, to the public if the record was filed in an application which became abandoned or in which the proceedings were terminated and which application is referenced by either a published application, an application open to public inspection or an issued patent.
9. A record from this system of records may be disclosed, as a routine use, to a Federal, State, or local law enforcement agency, if the USPTO becomes aware of a violation or potential violation of law or regulation.

PATENT
04189-P0061A WWW

IN THE UNITED STATES PATENT AND TRADEMARK OFFICE

Applicants	Thor Endre, *et al.*
Application No.: TBD	Filing Date: Herewith
Title of Application:	Switch Device And A Switchgear Provided Therewith

Mail Stop Amendment
Commissioner for Patents
Post Office Box 1450
Alexandria, VA 22313-1450

Request To Participate In Patent Prosecution Highway (PPH)

Filed herewith is form PTO/SB/20PCT-EP requesting participation in the PPH program and petitioning to make special the present application also filed herewith.

The present application is a continuation of, and claims priority from, PCT application PCT/EP2009/063664, filed on October 19, 2009. Applicant seeks accelerated examination under the PPH Program because corresponding claims in the PCT application have been found patentable in a Written Opinion (WO) issued by the European Patent Office.

Filed herewith is a copy of the WO dated January 19, 2010, indicating that claims 1-16 were found to have novelty, inventive step and industrial applicability. Also filed herewith is a copy of claims 1-16 from PCT/EP2009/063664 publication WO2010/049307.

The reference cited in the WO is submitted to the Office in an IDS filed herewith.

The claims of the present application have been amended to conform with U.S. claim format requirements. All claims correspond to claims found patentable in the WO

and are believed to have similar or more limited scope, as shown in the claims correspondence table in form PTO/SB/20PCT-EP.

Applicant's request to participate in the Patent Prosecution Highway and petition to make special is believed to be in condition for granting and a favorable decision is hereby requested.

Applicant believes that no fee is due in connection with the filing of this request. However, if any fee is due, please charge Deposit Account No. 19-4516.

Respectfully submitted,

/Wesley W. Whitmyer, Jr./

April 27, 2011

Wesley W. Whitmyer, Jr., Registration No. 33,558
Stephen Ball, Registration No. 59,169
Attorney for Applicants
ST.ONGE STEWARD JOHNSTON & REENS LLC
986 Bedford Street
Stamford, CT 06905-5619
Tel. 203 324-6155

PATENT COOPERATION TREATY

From the
INTERNATIONAL SEARCHING AUTHORITY

To:

see form PCT/ISA/220

PCT

WRITTEN OPINION OF THE INTERNATIONAL SEARCHING AUTHORITY

(PCT Rule 43*bis*.1)

Date of mailing
(day/month/year) see form PCT/ISA/210 (second sheet)

Applicant's or agent's file reference
see form PCT/ISA/220

FOR FURTHER ACTION
See paragraph 2 below

International application No.	International filing date *(day/month/year)*	Priority date *(day/month/year)*
PCT/EP2009/063664	19.10.2009	27.10.2008

International Patent Classification (IPC) or both national classification and IPC
INV. H01H1/42

Applicant
ABB RESEARCH LTD

1. This opinion contains indications relating to the following items:

- ☒ Box No. I Basis of the opinion
- ☐ Box No. II Priority
- ☐ Box No. III Non-establishment of opinion with regard to novelty, inventive step and industrial applicability
- ☐ Box No. IV Lack of unity of invention
- ☒ Box No. V Reasoned statement under Rule 43*bis*.1(a)(i) with regard to novelty, inventive step or industrial applicability; citations and explanations supporting such statement
- ☐ Box No. VI Certain documents cited
- ☐ Box No. VII Certain defects in the international application
- ☐ Box No. VIII Certain observations on the international application

2. **FURTHER ACTION**

If a demand for international preliminary examination is made, this opinion will usually be considered to be a written opinion of the International Preliminary Examining Authority ("IPEA") except that this does not apply where the applicant chooses an Authority other than this one to be the IPEA and the chosen IPEA has notifed the International Bureau under Rule 66.1*bis*(b) that written opinions of this International Searching Authority will not be so considered.

If this opinion is, as provided above, considered to be a written opinion of the IPEA, the applicant is invited to submit to the IPEA a written reply together, where appropriate, with amendments, before the expiration of 3 months from the date of mailing of Form PCT/ISA/220 or before the expiration of 22 months from the priority date, whichever expires later.

2010-08-27

For further options, see Form PCT/ISA/220.

3. For further details, see notes to Form PCT/ISA/220.

Name and mailing address of the ISA:	Date of completion of this opinion	Authorized Officer
European Patent Office D-80298 Munich Tel. +49 89 2399 - 0 Fax: +49 89 2399 - 4465	see form PCT/ISA/210	Simonini, Stefano Telephone No. +49 89 2399-8575

Form PCT/ISA/237 (Cover Sheet) (April 2005)

WRITTEN OPINION OF THE INTERNATIONAL SEARCHING AUTHORITY

International application No.
PCT/EP2009/063664

Box No. I Basis of the opinion

1. With regard to the **language**, this opinion has been established on the basis of:

   ☒ the international application in the language in which it was filed

   ☐ a translation of the international application into , which is the language of a translation furnished for the purposes of international search (Rules 12.3(a) and 23.1 (b)).

2. ☐ This opinion has been established taking into account the **rectification of an obvious mistake** authorized by or notified to this Authority under Rule 91 (Rule 43bis.1(a))

3. With regard to any **nucleotide and/or amino acid sequence** disclosed in the international application and necessary to the claimed invention, this opinion has been established on the basis of:

   a. type of material:

      ☐ a sequence listing

      ☐ table(s) related to the sequence listing

   b. format of material:

      ☐ on paper

      ☐ in electronic form

   c. time of filing/furnishing:

      ☐ contained in the international application as filed.

      ☐ filed together with the international application in electronic form.

      ☐ furnished subsequently to this Authority for the purposes of search.

4. ☐ In addition, in the case that more than one version or copy of a sequence listing and/or table relating thereto has been filed or furnished, the required statements that the information in the subsequent or additional copies is identical to that in the application as filed or does not go beyond the application as filed, as appropriate, were furnished.

5. Additional comments:

Box No. V Reasoned statement under Rule 43*bis*.1(a)(i) with regard to novelty, inventive step or industrial applicability; citations and explanations supporting such statement

1. Statement

Novelty (N)	Yes:	Claims	1-16
	No:	Claims	
Inventive step (IS)	Yes:	Claims	1-16
	No:	Claims	
Industrial applicability (IA)	Yes:	Claims	1-16
	No:	Claims	

2. Citations and explanations

see separate sheet

Re Item V

Reasoned statement with regard to novelty, inventive step or industrial applicability; citations and explanations supporting such statement

1

The subject matter of claim 2 is redundant as it is already present in claim 1 (Art.6 PCT).

2

Reference is made to the following document:

D1 EP 0 310 211 A (G & W ELECTRIC [US]) 5 April 1989 (1989-04-05)

3

Document D1, considered closest state of the art, discloses:

A switch device comprising

- a bus bar (52a, fig.1), and
- a switch knife (112),
- wherein the knife is arranged so as to pivot around an axis (98) perpendicular to a longitudinal axis of the bus bar, whereby
- the bus bar presents a projection (46a) and that the knife is pivotable to a first position, in which it directly contacts said projection, and to a second position (that of fig.3) in which it is removed from contact with said projection.

The subject - matter of claim 1 therefore differs therefrom in that the projection is an integrated part of the bus bar.

The problem to be solved by the present invention may be regarded as how to simplify the construction of a bus bar mounted switching device.

The solution to this problem proposed in claim 1 of the present application is considered as involving an inventive step (Article 33(3) PCT) as it is not suggested by any of the available prior art.

No prior art document shows a knife switch adapted to contact a bus bar directly.

4

Claims 3 to 16 are dependent on claim 1 and as such also meet the requirements of the PCT with respect to novelty and inventive step.

Possible steps after receipt of the international search report (ISR) and written opinion of the International Searching Authority (WO-ISA)

General information	For all international applications filed on or after 01/01/2004 the competent ISA will establish an ISR. It is accompanied by the WO-ISA. Unlike the former written opinion of the IPEA (Rule 66.2 PCT), the WO-ISA is not meant to be responded to, but to be taken into consideration for further procedural steps. This document explains about the possibilities.
Amending claims under Art. 19 PCT	Within 2 months after the date of mailing of the ISR and the WO-ISA the applicant may file amended claims under Art. 19 PCT directly with the International Bureau of WIPO. The PCT reform of 2004 did not change this procedure. For further information please see Rule 46 PCT as well as form PCT/ISA/220 and the corresponding Notes to form PCT/ISA/220.
Filing a demand for international preliminary examination	In principle, the WO-ISA will be considered as the written opinion of the IPEA. This should, in many cases, make it unnecessary to file a demand for international preliminary examination. If the applicant nevertheless wishes to file a demand this must be done before expiry of 3 months after the date of mailing of the ISR/WO-ISA or 22 months after priority date, whichever expires later (Rule 54bis PCT). Amendments under Art. 34 PCT can be filed with the IPEA as before, normally at the same time as filing the demand (Rule 66.1 (b) PCT). If a demand for international preliminary examination is filed and no comments/amendments have been received the WO-ISA will be transformed by the IPEA into an IPRP (International Preliminary Report on Patentability) which would merely reflect the content of the WO-ISA. The demand can still be withdrawn (Art. 37 PCT).
Filing informal comments	After receipt of the ISR/WO-ISA the applicant may file informal comments on the WO-ISA directly with the International Bureau of WIPO. These will be communicated to the designated Offices together with the IPRP (International Preliminary Report on Patentability) at 30 months from the priority date. Please also refer to the next box.
End of the international phase	At the end of the international phase the International Bureau of WIPO will transform the WO-ISA or, if a demand was filed, the written opinion of the IPEA into the IPRP, which will then be transmitted together with possible informal comments to the designated Offices. The IPRP replaces the former IPER (international preliminary examination report).
Relevant PCT Rules and more information	Rule 43 PCT, Rule 43bis PCT, Rule 44 PCT, Rule 44bis PCT, PCT Newsletter 12/2003, OJ 11/2003, OJ 12/2003

BNSDOCID: <XS_____20070401OCK_I_>

CLAIMS

1. A switch device comprising
- a bus bar (10), and
- a switch knife (9),
- where the knife (9) is arranged so as to pivot around an axis perpendicular to a longitudinal axis of the bus bar (10),
characterized in that
- the bus bar (10) presents a projection (14) which is an integrated part of the bus bar (10), and in that the knife (9) is pivotable to a first position, in which it directly contacts said projection (14), and to a second position in which it is removed from contact with said projection (14).

2. A switch device according to claim 1, **characterized in** that the projection (14) is integral with the bus bar (10).

3. A switch device according to claim 1 or 2, **characterized in** that, on at least one side of said projection (14), there is provided a lateral elevation (15) extending in the longitudinal direction of the bus bar (10), said knife (9) being arranged to contact said elevation (15) when pivoted into its first position.

4. A switch device according to any of the claims 1 to 3, **characterized in** that, on opposite sides of said projection (14), there is provided a lateral elevation (15) extending in the longitudinal direction of the bus bar (10), said knife (9) being arranged to contact said elevation (15) when pivoted into its first position.

5. A switch device according to any one of claims 1-4, **characterized in** that, in a region in which the projection (14) is in contact with the knife (9) when the latter is in its first position, the projection (14) presents an outer surface comprising Sn, Ni, Ag or Au as its main constituent.

6. A switch device according to claim 5, **characterized in** that, in a region adjacent the region in which said outer surface is provided, the projection (14) is covered by a material to which the main constituent of said outer surface is non-adhesive.

7. A switch device according to any one of claims 1-6, **characterized in** that a bulk part of the bus bar (10) comprises aluminium as its main constituent.

8. A switch device according to claim 7, **characterized in** that the bus bar (10) is formed by an extruded profile.

9. A switch device according to any one of claims 1-8, **characterized in** that said knife (9) comprises two shanks (9a, 9b) separated by a gap, said shanks (9a, 9b) being arranged so as to contact opposite sides of said projection (14) of the bus bar (10) when the knife (9) is in its first position.

10. A switch device according to any one of claims 1-9, **characterized in** that a bulk part of the knife (9) comprises Cu as a main constituent.

11. A switch device according to any one of claims 1-10, **characterized in** that, in a region in which the knife (9) is in contact with the projection (14) when in its first position, the knife (9) presents an outer surface comprising Sn, Ni, Ag or Au as its main constituent.

12. A switch device according to any one of claims 1-11, **characterized in** that it comprises a stop means for preventing pivoting of the knife (9) from the second position beyond the first position.

13. A switch device according to any one of claims 1-12, **characterized in** that it comprises a securing means (17, 18, 19, 20, 21) for securing the knife (9) in its first position.

14. A switch device according to claim 13, **characterized in** that said securing means comprises a recess (21) provided in said projection (14) of the bus bar (10).

15. A medium or high voltage switchgear, **characterized in** that it comprises a switch device according to any one of claims 1-14.

16. A switchgear according to claim 15, **characterized in** that it defines an inner space in which said switch device is arranged, said inner space being filled with an oxygen-containing gas mixture.

UNITED STATES PATENT AND TRADEMARK OFFICE

UNITED STATES DEPARTMENT OF COMMERCE
United States Patent and Trademark Office
Address: COMMISSIONER FOR PATENTS
P.O. Box 1450
Alexandria, Virginia 22313-1450
www.uspto.gov

APPLICATION NO.	FILING DATE	FIRST NAMED INVENTOR	ATTORNEY DOCKET NO.	CONFIRMATION NO.
13/095,386	04/27/2011	Thor Endre	04189-P0061A	2502

7590 05/24/2011

Wesley W. Whitmyer, Jr.
ST. ONGE STEWARD JOHNSTON & REENS LLC
986 Bedford Street
Stamford, CT 06905-5619

EXAMINER	
ART UNIT	PAPER NUMBER
2833	

MAIL DATE	DELIVERY MODE
05/24/2011	PAPER

Please find below and/or attached an Office communication concerning this application or proceeding.

The time period for reply, if any, is set in the attached communication.

UNITED STATES PATENT AND TRADEMARK OFFICE

Commissioner for Patents
United States Patent and Trademark Office
P.O. Box 1450
Alexandria, VA 22313-1450
www.uspto.gov

Wesley W. Whitmyer, Jr.
ST. ONGE STEWARD JOHNSTON & REENS LLC
986 Bedford Street
Stamford CT 06905-5619

In re Application of	
Thor ENDRE	**: DECISION ON REQUEST TO**
Application No.: 13/095,386	**: PARTICIPATE IN THE PATENT**
Filed: 27 April 2011	**: PROSECUTION HIGHWAY**
Attorney Docket No.: 04189-P0061A	**: PROGRAM AND PETITION**
For: SWITCH DEVICE AND A SWITCHGEAR PROVIDED THEREWITH	**: TO MAKE SPECIAL UNDER : 37 CFR 1.102(a)**

This is a decision on the request to participate in the PCT Patent Prosecution Highway (PCT-PPH) pilot program and the petition under 37 CFR 1.102(a), filed 27 April 2011, to make the above-identified application special.

The request and petition are **GRANTED**.

Discussion

A grantable request to participate in the PCT-PPH pilot program and petition to make special require:

(1) The U.S. application must have an eligible relationship to one or more PCT applications where the ISA or IPEA are the JPO, EPO, KIPO, or USPTO;

(2) At least one claim in the PCT application has novelty, inventive step, and industrial applicability and must be free of any observations in Box VIII in the latest work product in the international stage or applicant must identify and explain why the claim(s) is/are not subject to the observation in Box VIII;

(3) Applicant must submit a copy of the claim(s) from the PCT application(s) that have novelty, inventive step, and industrial applicability along with an English translation thereof and a statement that the English translation is accurate, if the claims are not in the English language;

(4) All the claims in the U.S. application must sufficiently correspond or be amended to sufficiently correspond to the claim(s) that have novelty, inventive step, and industrial applicability in the PCT application(s);

(5) Examination of the U.S. application has not begun;

(6) Applicant must submit a copy of the latest international work product from the PCT application indicating that the claim(s) have novelty, inventive step, and industrial applicability along with an English translation thereof and a statement that the English translation is accurate if the latest international work product is not in the English language;

(7) Applicant must submit an IDS listing the documents cited by the PCT examiner in the international work product along with copies of documents except U.S. patents or U.S. patent application publications.

The request to participate in the PCT-PPH pilot program and petition comply with the above requirements. Accordingly, the above-identified application has been accorded "special" status.

Telephone inquiries concerning this decision should be directed to Lee W. Young at 571-272-4549.

All other inquiries concerning the examination or status of the application is accessible in the PAIR system at http://www.uspto.gov/ebc.index.html.

This application will be forwarded to the examiner for action on the merits commensurate with this decision once this application's formality reviews have been completed.

Lee W. Young
TQAS Technology Center 2800 - Semiconductors,
Electrical & Optical Systems & Components

Doc code : PET.OP.AGE
Description : Petition to make special based on Age/Health

PTO/SB/130 (07-09)
Approved for use through 07/31/2012. OMB 0651- 0031
U.S. Patent and Trademark Office; U.S. DEPARTMENT OF COMMERCE
Under the Paperwork Reduction Act of 1995, no persons are required to respond to a collection of information unless it contains a valid OMB control number

PETITION TO MAKE SPECIAL BASED ON AGE FOR ADVANCEMENT OF EXAMINATION UNDER 37 CFR 1.102(c)(1)

Application Information

Application Number	13095417	Confirmation Number	2562	Filing Date	2011-04-27
Attorney Docket Number (optional)		Art Unit		Examiner	
First Named Inventor	Abdulaziz A Bagabas				
Title of Invention	SYNTHESIZING AND UTILIZING NOVEL RUTHENIUM NANOPARTICLE-ACTIVATED CHARCOAL-NANO-ZINC OXIDE COMPOSITE CATALYST				

Attention: Office of Petitions

An application may be made special for advancement of examination upon filing of a petition showing that the applicant is 65 years of age, or more. No fee is required with such a petition. See 37 CFR 1.102(c)(1) and MPEP 708.02 (IV).

APPLICANT HEREBY PETITIONS TO MAKE SPECIAL FOR ADVANCEMENT OF EXAMINATION IN THIS APPLICATION UNDER 37 CFR 1.102(c)(1) and MPEP 708.02 (IV) ON THE BASIS OF THE APPLICANT'S AGE.

A grantable petition requires one of the following items:
(1) Statement by one named inventor in the application that he/she is 65 years of age, or more; or
(2) Certification by a registered attorney/agent having evidence such as a birth certificate, passport, driver's license, etc. showing one named inventor in the application is 65 years of age, or more.

Name of Inventor who is 65 years of age, or older

Given Name	Middle Name	Family Name	Suffix
Vagif	Malik	Akhmedov	

A signature of the applicant or representative is required in accordance with 37 CFR 1.33 and 10.18. Please see 37 CFR 1.4(d) for the format of the signature.

Select (1) or (2) :

○ (1) I am an inventor in this application and I am 65 years of age, or more.

◉ (2) I am an attorney or agent registered to practice before the Patent and Trademark Office, and I certify that I am in possession of evidence, and will retain such in the application file record, showing that the inventor listed above is 65 years of age, or more.

Signature	/Geeta Kadambi/	Date (YYYY-MM-DD)	2011-04-27
Name	GEETA KADAMBI	Registration Number	64446

PTO/SB/130 (07-09)
Approved for use through 07/31/2012. OMB 0651- 0031
U.S. Patent and Trademark Office; U.S. DEPARTMENT OF COMMERCE
Under the Paperwork Reduction Act of 1995, no persons are required to respond to a collection of information unless it contains a valid OMB control number

Privacy Act Statement

The Privacy Act of 1974 (P.L. 93-579) requires that you be given certain information in connection with your submission of the attached form related to a patent application or patent. Accordingly, pursuant to the requirements of the Act, please be advised that: (1) the general authority for the collection of this information is 35 U.S.C. 2(b)(2); (2) furnishing of the information solicited is voluntary; and (3) the principal purpose for which the information is used by the U.S. Patent and Trademark Office is to process and/or examine your submission related to a patent application or patent. If you do not furnish the requested information, the U.S. Patent and Trademark Office may not be able to process and/or examine your submission, which may result in termination of proceedings or abandonment of the application or expiration of the patent.

The information provided by you in this form will be subject to the following routine uses:

1. The information on this form will be treated confidentially to the extent allowed under the Freedom of Information Act (5 U.S.C. 552) and the Privacy Act (5 U.S.C. 552a). Records from this system of records may be disclosed to the Department of Justice to determine whether the Fr eedom of Information Act requires disclosure of these records.

2. A record from this system of records may be disclosed, as a routine use, in the course of presenting evidence to a court, magistrate, or administrative tribunal, including disclosures to opposing counsel in the course of settlement negotiations.

3. A record in this system of records may be disclosed, as a routine use, to a Member of Congress submitting a request involving an individual, to whom the record pertains, when the individual has requested assistance from the Member with respect to the subject matter of the record.

4. A record in this system of records may be disclosed, as a routine use, to a contractor of the Agency having need for the information in order to perform a contract. Recipients of information shall be required to comply with the requirements of the Privacy Act of 1974, as amended, pursuant to 5 U.S.C. 552a(m).

5. A record related to an International Application filed under the Patent Cooperation Treaty in this system of records may be disclosed, as a routine use, to the International Bureau of the World Intellectual Property Organization, pursuant to the Patent Cooperation Treaty.

6. A record in this system of records may be disclosed, as a routine use, to another federal agency for purposes of National Security review (35 U.S.C. 181) and for review pursuant to the Atomic Energy Act (42 U.S.C. 218(c)).

7. A record from this system of records may be disclosed, as a routine use, to the Administrator, General Services, or his/her designee, during an inspection of records conducted by GSA as part of that agency's responsibility to recommend improvements in records management practices and programs, under authority of 44 U.S.C. 2904 and 2906. Such disclosure shall be made in accordance with the GSA regulations governing inspection of records for this purpose, and any other relevant (i.e., GSA or Commerce) directive. Such disclosure shall not be used to make determinations about indivi duals.

8. A record from this system of records may be disclosed, as a routine use, to the public after either publication of the application pursuant to 35 U.S.C. 122(b) or issuance of a patent pursuant to 35 U.S.C. 151. Further, a record may be disclosed, subject to the limitations of 37 CFR 1.14, as a routine use, to the public if the record was filed in an application which became abandoned or in which the proceedings were terminated and which application is referenced by either a published application, an application open to public inspections or an issued patent.

9. A record from this system of records may be disclosed, as a routine use, to a Federal, State, or local law enforcement agency, if the USPTO becomes aware of a violation or potential violation of law or regulation.

UNITED STATES PATENT AND TRADEMARK OFFICE

Commissioner for Patents
United States Patent and Trademark Office
P.O. Box 1450
Alexandria, VA 22313-1450
www.uspto.gov

In re Application of
ABDULAZIZ A BAGABAS

Application No. 13095417

Filed:

Attorney Docket No. RIPLLC007.001CIP1

:DECISION ON PETITION TO MAKE SPECIAL
:UNDER 37 CFR 1.102(c)(1)

This is a decision on the electronic petition under 37 CFR 1.102 (c)(1), filed 27-APR-2011 to make the above-identified application special based on applicant's age as set forth in MPEP § 708.02, Section IV.

The petition is **GRANTED**.

A grantable petition to make an application special under 37 CFR 1.102(c)(1), MPEP § 708.02, Section IV: Applicant's Age must include a statement by applicant or a registered practitioner having evidence that applicant is at least 65 years of age. No fee is required.

Accordingly, the above-identified application has been accorded "special" status and will be taken up for action by the examiner upon the completion of all pre-examination processing.

Telephone inquiries concerning this electronic decision should be directed to the Electronic Business Center at 866-217-9197.

All other inquiries concerning either the examination or status of the application should be directed to the Technology Center.

Doc Code: PET.GREEN
Document Description: Petition for Green Tech Pilot

PTO/SB/420 (05-10)
Approved for use through 05/31/2010. OMB 0651-0062
U.S. Patent and Trademark Office; U. S. DEPARTMENT OF COMMERCE
Under the Paperwork Reduction Act of 1995, no persons are required to respond to a collection of information unless it displays a valid OMB control number.

PETITION TO MAKE SPECIAL UNDER THE GREEN TECHNOLOGY PILOT PROGRAM

Attorney Docket Number: 1630-0869PUS1	Application Number (if known): 13/095,466	Filing date: April 27, 2011
First Named Inventor: Daehee JANG		
Title: SOLAR CELL		

APPLICANT HEREBY REQUESTS TO PARTICIPATE IN THE GREEN TECHNOLOGY PILOT PROGRAM FOR THE ABOVE-IDENTIFIED APPLICATION. See Instruction Sheet on page 2.

This petition must be timely filed electronically using the USPTO electronic filing system, EFS-Web.

1. By filing this petition:

   Applicant is requesting early publication: Applicant hereby requests early publication under 37 CFR 1.219 and the publication fee set forth in 37 CFR 1.18(d) accompanies this request.

2. By filing this petition: applicant is agreeing to make an election without traverse in a telephonic interview and elect an invention that meets the eligibility requirements set forth in the notice titled "Pilot Program for Green Technologies Including Greenhouse Gas Reduction," as modified by the notice titled "Elimination of Classification Requirement in the Green Technology Pilot Program," each of which was published in the Federal Register, if the Office determines that the claims are not obviously directed to a single invention.

3. This request is accompanied by statements of special status for the eligibility requirement.

4. The application contains no more than three (3) independent claims and twenty (20) total claims.

5. The application does not contain any multiple dependent claims.

6. Other attachments: _____

Signature	Date MAY 0 6 2011
Name (Print/Typed) Esther H. Chong	Registration Number 40953

Note: *Signatures of all the inventors or assignees of record of the entire interest or their representative(s) are required in accordance with 37 CFR 1.33 and 11.18. Please see 37 CFR 1.4(d) for the form of the signature. If necessary, submit multiple forms for more than one signature, see below*.*

☐ *Total of _____ forms are submitted.

The information is required to obtain or retain a benefit by the public which is to file (and by the USPTO to process) an application. Confidentiality is governed by 35 U.S.C. 122 and 37 CFR 1.11 and 1.14. This collection is estimated to take 12 hours to complete, including gathering, preparing, and submitting the completed application form to the USPTO. Time will vary depending upon the individual case. Any comments on the amount of time you require to complete this form and/or suggestions for reducing this burden, should be sent to the Chief Information Officer, U.S. Patent and Trademark Office, U.S. Department of Commerce, P.O. Box 1450, Alexandria, VA 22313-1450. DO NOT SEND FEES OR COMPLETED FORMS TO THIS ADDRESS. **SEND TO: Commissioner for Patents, P.O. Box 1450, Alexandria, VA 22313-1450.**

If you need assistance in completing the form, call 1-800-PTO-9199 and select option 2.

Docket No.: 1630-0869PUS1
(Patent)

IN THE UNITED STATES PATENT AND TRADEMARK OFFICE

Patent Application of:
Daehee JANG et al.

Application No.:	13/095,466	Confirmation No.:	2681
Filed:	April 27, 2011	Art Unit:	1725
For: SOLAR CELL		Examiner:	Not Yet Assigned

STATEMENT OF SPECIAL STATUS FOR THE ELIGIBILITY REQUIREMENT UNDER THE GREEN TECHNOLOGY PILOT PROGRAM

Commissioner for Patents
P.O. Box 1450
Alexandria, VA 22313-1450

Sir:

In support of the Petition to Make Special Under the Green Technology Pilot Program, it is respectfully submitted that the basis for the requested special status is that the invention claimed in the above-identified patent application materially contributes to the development of renewable energy sources and/or green house gas emission reduction. Specifically, the claimed invention relates to a solar cell.

Additionally, by filing this petition, the applicant agrees to make an election without traverse in a telephone interview and elect an invention that meets the eligibility requirements set for in the notice titled "Pilot Program for Green Technologies Including Greenhouse Gas Reduction," as modified by the notice titled "Elimination of Classification Requirement in the Green Technology Pilot Program," each of which was published in the Federal Register, if the Office determines that the claims are not obviously directed to a single invention.

It is also submitted that this application meets the eligibility requirements to participate in the Green Technology Pilot Program, as listed in the attached Petition to Make Special Under the Green Technology Pilot Program.

Accordingly, it is respectfully requested that the Petition be granted.

Should there be any outstanding matters that need to be resolved in the present application, the Examiner is respectfully requested to contact Seth S. Kim, Reg. No. 54,577, at the telephone number of the undersigned below to conduct an interview in an effort to expedite prosecution in connection with the present application.

If necessary, the Director is hereby authorized in this, concurrent, and future replies to charge any fees required during the pendency of the above-identified application or credit any overpayment to Deposit Account No. 02-2448.

Dated: MAY 06 2011

Respectfully submitted,

By _____

Esther H. Chong
Registration No.: 40953
BIRCH, STEWART, KOLASCH & BIRCH, LLP
8110 Gatehouse Road, Suite 100 East
P.O. Box 747
Falls Church, VA 22040-0747
703-205-8000

Attachment

UNITED STATES PATENT AND TRADEMARK OFFICE

UNITED STATES DEPARTMENT OF COMMERCE
United States Patent and Trademark Office
Address: COMMISSIONER FOR PATENTS
P.O. Box 1450
Alexandria, Virginia 22313-1450
www.uspto.gov

APPLICATION NO.	FILING DATE	FIRST NAMED INVENTOR	ATTORNEY DOCKET NO.	CONFIRMATION NO.
13/095,466	04/27/2011	Daehee Jang	1630-0869PUS1	2681

2292 7590 05/26/2011
BIRCH STEWART KOLASCH & BIRCH
PO BOX 747
FALLS CHURCH, VA 22040-0747

EXAMINER	
ART UNIT	PAPER NUMBER
1725	

NOTIFICATION DATE	DELIVERY MODE
05/26/2011	ELECTRONIC

Please find below and/or attached an Office communication concerning this application or proceeding.

The time period for reply, if any, is set in the attached communication.

Notice of the Office communication was sent electronically on above-indicated "Notification Date" to the following e-mail address(es):

mailroom@bskb.com

UNITED STATES PATENT AND TRADEMARK OFFICE

Commissioner for Patents
United States Patent and Trademark Office
P.O. Box 1450
Alexandria, VA 22313-1450
www.uspto.gov

BIRCH STEWART KOLASCH & BIRCH
PO BOX 747
FALLS CHURCH VA 22040-0747

MAY 26 2011

In re Application of :
Jang et al. :
Application No. 13/095,466 :
Filed: 4/27/2011 :
Attorney Docket No. **1630-0869PUS1** :

DECISION ON PETITION
TO MAKE SPECIAL UNDER
THE GREEN TECHNOLOGY
PILOT PROGRAM

This is a decision on the petition under 37 CFR 1.102, filed 5/6/2011, to make the above-identified application special under the pilot program for applications pertaining to Green Technologies as set forth in 74 Federal Register Notice 64666 (December 8, 2009) and amended by 75 Federal Register Notice 28554 (May 21, 2010) and 75 Federal Register Notice 69049 (November 10, 2010).

The petition is **GRANTED**.

A grantable petition to make an application special under 37 CFR 1.102 and the pilot program as set forth in 74 FR 64666 must be directed to a nonprovisional application filed under 35 USC 111(a) or be a national stage entry under 35 USC 371, exclusive of any reissue applications.

In order to qualify for special status, the following requirements must be met. 1) The application must have no more than 3 independent claims and no more than 20 total claims. 2) The application must not contain any multiple dependent claims. 3) The petition must state the basis for seeking special status, i.e., the claimed invention either: A) materially enhances the quality of the environment or B) materially contributes to: i) the discovery or development of renewable energy resources, ii) the more efficient utilization and conservation of energy resources, or iii) greenhouse gas emission reduction. 4) If the disclosure is not clear on its face that the claimed invention materially contributes under category (A) or (B), the petition must be accompanied by a statement by the applicant, assignee, or an attorney/agent registered to practice before the Office explaining how the materiality standard is met. 5) A statement that applicant will agree to make an election without traverse in a telephonic interview if a restriction requirement is made by the examiner. 6) The petition to make special must be filed electronically. 7) The petition must be filed at least one day prior to the date that a first Office Action appears in the Patent Application Information Retrieval (PAIR) system. 8) The petition must be accompanied by a request for early publication in compliance with 37 CFR 1.219 and include the publication fee as set forth in 37 CFR 1.18(d).

The requirement for a fee for consideration of the petition to make special for applications pertaining to Green Technologies has been waived.

The instant petition complies with items 1 – 8 above. Accordingly, the above-identified application has been accorded "special" status.

Telephone inquires concerning this decision should be directed to Tom Dunn at 571-272-1171.

The application is being forwarded to the Technology Center Art Unit 1725 for action on the merits commensurate with this decision.

/Tom Dunn/

Tom Dunn
Quality Assurance Specialist
Technology Center 1700

HPATENT
05144-P0038A WWW/SFB

IN THE UNITED STATES PATENT AND TRADEMARK OFFICE

Applicants	Paal Kristian Skryten, *et al.*
Application No. 13/095,478	Filing Date: April 27, 2011
Title of Application:	Electric Power Distribution Arrangement And A Switchgear Provided Therewith
Confirmation No. 2702	Art Unit: 2833

Mail Stop Amendment
Commissioner for Patents
Post Office Box 1450
Alexandria, VA 22313-1450

Request To Participate In Patent Prosecution Highway (PPH)

Filed herewith is form PTO/SB/20PCT-EP requesting participation in the PPH program and petitioning to make special U.S. Patent Application 13/095,478.

U.S. Pat. App. 13/095,478 is a continuation of, and claims priority from, PCT application PCT/EP2009/063683, filed on October 19, 2009. Applicant seeks accelerated examination under the PPH Program because corresponding claims in the PCT application have been found patentable in an International Preliminary Report on Patentability (IPRP) issued by the European Patent Office.

Filed herewith is a copy of the IPRP dated March 15, 2011, including copies of claims 1-6, and indicating that claims 1-6 were found to have novelty, inventive step and industrial applicability.

The references cited in the IPRP were submitted to the Office in an IDS on April 27, 2011.

Also filed herewith is a Supplemental Preliminary Amendment amending the claims in U.S. Pat. App. 13/095,478 to conform with claims 1-6 from the IPRP.

The claims of U.S. Pat. App. 13/095,478 have been amended to conform with U.S. claim format requirements. All claims correspond to claims found patentable in the IPRP and are believed to have similar or more limited scope, as shown in the claims correspondence table in form PTO/SB/20PCT-EP.

Applicant's request to participate in the Patent Prosecution Highway and petition to make special is believed to be in condition for granting and a favorable decision is hereby requested.

Applicant believes that no fee is due in connection with the filing of this request. However, if any fee is due, please charge Deposit Account No. 19-4516.

Respectfully submitted,

/Wesley W. Whitmyer, Jr./

June 3, 2011

Wesley W. Whitmyer, Jr., Registration No. 33,558
Stephen Ball, Registration No. 59,169
Attorney for Applicants
ST.ONGE STEWARD JOHNSTON & REENS LLC
986 Bedford Street
Stamford, CT 06905-5619
Tel. 203 324-6155

PATENT COOPERATION TREATY

PCT

INTERNATIONAL PRELIMINARY REPORT ON PATENTABILITY

(Chapter II of the Patent Cooperation Treaty)

(PCT Article 36 and Rule 70)

Applicant's or agent's file reference 10398WO/HK/J	**FOR FURTHER ACTION**	See Form PCT/IPEA/416
International application No. PCT/EP2009/063683	International filing date *(day/month/year)* 19.10.2009	Priority date *(day/month/year)* 27.10.2008
International Patent Classification (IPC) or national classification and IPC INV. H02G5/02		
Applicant ABB Technology AG		

1. This report is the international preliminary examination report, established by this International Preliminary Examining Authority under Article 35 and transmitted to the applicant according to Article 36.
2. This REPORT consists of a total of 4 sheets, including this cover sheet.
3. This report is also accompanied by ANNEXES, comprising:
   a. ☒ *sent to the applicant and to the International Bureau)* a total of 3 sheets, as follows:
      ☒ sheets of the description, claims and/or drawings which have been amended and are the basis of this report and/or sheets containing rectifications authorized by this Authority (see Rule 70.16 and Section 607 of the Administrative Instructions).
      ☐ sheets which supersede earlier sheets, but which this Authority considers contain an amendment that goes beyond the disclosure in the international application as filed, as indicated in item 4 of Box No. I and the Supplemental Box.
   b. ☐ *(sent to the International Bureau only)* a total of (indicate type and number of electronic carrier(s)) , containing a sequence listing, in electronic form only, as indicated in the Supplemental Box Relating to Sequence Listing (see paragraph 3*bis* of Annex C of the Administrative Instructions).

4. This report contains indications relating to the following items:

☒	Box No. I	Basis of the report
☐	Box No. II	Priority
☐	Box No. III	Non-establishment of opinion with regard to novelty, inventive step and industrial applicability
☐	Box No. IV	Lack of unity of invention
☒	Box No. V	Reasoned statement under Article 35(2) with regard to novelty, inventive step or industrial applicability; citations and explanations supporting such statement
☐	Box No. VI	Certain documents cited
☐	Box No. VII	Certain defects in the international application
☐	Box No. VIII	Certain observations on the international application

Date of submission of the demand	Date of completion of this report
2010-08-18	15.03.2011
Name and mailing address of the international preliminary examining authority: European Patent Office P.B. 5818 Patentlaan 2 NL-2280 HV Rijswijk - Pays Bas Tel. +31 70 340 - 2040 Fax: +31 70 340 - 3016	Authorized officer Castanheira Nunes, F Telephone No. +31 70 340-4297

INTERNATIONAL PRELIMINARY REPORT ON PATENTABILITY

International application No.
PCT/EP2009/063683

Box No. I Basis of the report

1. With regard to the **language**, this report is based on

   ☒ the international application in the language in which it was filed

   ☐ a translation of the international application into , which is the language of a translation furnished for the purposes of:
   - ☐ international search (under Rules 12.3(a) and 23.1(b))
   - ☐ publication of the international application (under Rule 12.4(a))
   - ☐ international preliminary examination (under Rules 55.2(a) and/or 55.3(a))

2. With regard to the **elements*** of the international application, this report is based on *(replacement sheets which have been furnished to the receiving Office in response to an invitation under Article 14 are referred to in this report as "originally filed" and are not annexed to this report)*:

Description, Pages

1-10	as originally filed	

Claims, Numbers

1-6	filed with telefax on	18-08-2010

Drawings, Sheets

2/2	as originally filed	
1/2	filed with telefax on	18-08-2010

☐ a sequence listing - see Supplemental Box Relating to Sequence Listing.

3. ☒ The amendments have resulted in the cancellation of:
   - ☐ the description, pages
   - ☒ the claims, Nos. 7, 8
   - ☐ the drawings, sheets/figs
   - ☐ the sequence listing *(specify)*:
   - ☐ any table(s) related to sequence listing *(specify)*:

4. ☐ This report has been established as if (some of) the amendments annexed to this report and listed below had not been made, since either they are considered to go beyond the disclosure as filed, or they were not accompanied by a letter indicating the basis for the amendments in the application as filed, as indicated in the Supplemental Box (Rules 70.2(c) and (c-bis)):
   - ☐ the description, pages
   - ☐ the claims, Nos.
   - ☐ the drawings, sheets/figs
   - ☐ the sequence listing *(specify)*:

5. ☐ This opinion has been established taking into account the **rectification of an obvious mistake** authorized by or notified to this Authority under Rule 91 (Rule 70.2 (e)).

6. ☐ Supplementary international search report(s) from Authority(ies) have been received and taken into account in drawing up this report (Rule 45bis.8(b) and (c)).

Box No. V Reasoned statement under Article 35(2) with regard to novelty, inventive step or industrial applicability; citations and explanations supporting such statement

1. Statement

Novelty (N)	Yes:	Claims	1-6
	No:	Claims	
Inventive step (IS)	Yes:	Claims	1-6
	No:	Claims	
Industrial applicability (IA)	Yes:	Claims	1-6
	No:	Claims	

2. Citations and explanations (Rule 70.7):

see separate sheet

Reference is made to the following documents:

D1 US 2007/145822 A1 (LOPEZ ALBERTO A [US] ET AL) 28 June 2007 (2007-06-28)

D2 US 3 088 994 A (CATALDO JOHN B) 7 May 1963 (1963-05-07)

D3 US 4 536 659 A (SEITZ JAMES P [US] ET AL) 20 August 1985 (1985-08-20)

D4 FR 2 232 112 A (BBC BROWN BOVERI & CIE [CH]) 27 December 1974 (1974-12-27)

D5 AU 460 912 B2 (VINCENT BROS. PTY. LIMITED) 8 May 1975 (1975-05-08)

Prior art documents show oval shaped conductors in different electrical environments. D1 discloses a power distribution wire that for space consideration purposes has an oval shape. The conductors of D1 are to be used in a vehicle.

Amended claim 1 incorporates technical features that define the setting where the current conductors are considered, i.e., a switchgear for power distribution having parallel conductors, an earthed encapsulation and a switching device.

Having oval shaped conductors as in the characterizing part of the claim in a switchgear as described above is neither known nor rendered obvious by the available prior art.

ation: 18.08.2010 10:48:10 - 18.08.2010 10:49:58 This page 7 of 16 was completed at 18.08.2010 10:48:59

CLAIMS

1. A switchgear comprising an electric power distribution arrangement comprising
- a grounded encapsulation (2),
- a plurality of at least partly parallel adjacent electric conductors (4) arranged inside the grounded encapsulation (2) and arranged to carry a high voltage,
- a first pair of bodies (6, 13) provided on opposite sides of a first conductor (4) of the plurality of electric conductors (4) as seen in a first direction cross-wise to a longitudinal axis of the first conductor (4),
- a second pair of bodies (4, 14: 4, 15: 4, 4) provided on opposite sides of the first conductor (4) as seen in a second direction cross-wise to a longitudinal axis of the first conductor (4),
- where the bodies (4, 6, 13, 14, 15) of said first and second pair of bodies are arranged so as to be electrically disconnected from the first conductor (4), and where the spacing between the bodies of said first pair (6, 13) is larger than the spacing between the bodies of said second pair (4, 14: 4, 15: 4, 4),
-at least one of said bodies (4, 6, 13, 14, 15) of at least one of said first and second pair comprising a second current conductor (4) of the plurality of electric conductors (4),
-at least one of said bodies of at least one of said first and second pair comprising a wall element (13, 14, 15) of the encapsulation (2), and
-at least one of said bodies comprising a switching device (3) to which the first conductor or an adjacent conductor is electrically connectable, **characterised in** that, in a region in which the first conductor (4) is surrounded by said first pair (6, 13) and second pair (4, 14: 4, 15: 4, 4),
- the first conductor (4) has a substantially oval or substantially elliptical shaped outer periphery, and where
- the cross section of the first conductor (4) has a larger dimension in the first direction than in the second direction.

2. A switchgear according to claim 1, **characterised in** that the first conductor (4) has a tubular cross section.

18-08-10 10:16 FRAN-ABB AB GFLC/IP +46 21 181386 +46211181386 T-602 P.007/016 F-764

PCT/EP 2009/063 683 - 18-08-2010 Page 8 of 16
18.08.2010 10:49:03 This page 8 of 16 was completed at 18.08.2010 10:49:58 - 18.08.2010 10:48:10

3. A switchgear according to claim 1, **characterised in** that the first conductor (4) comprises a tubular part (16) and a main current-conducting part (17, 18) located inside and in electric contact with said tubular part (16).

4. A switchgear according to claim 3, **characterised in** that the main current-conducting part (17) presents a circular cross section.

5. A switchgear according to claim 2 or 3, **characterised in** that the main current-conducting part (18) presents a tubular cross-section.

6. A switchgear according to any one of claims 1-5, **characterised in** that it comprises an encapsulation (2), a bushing (4) and a switching device (3), wherein the first current conductor (4) is connected to the bushing (4) in one end and to the switching device (3) in another end.

18-08-10 10:16 FRAN-ABB AB GFLC/IP +46 21 181386 +46211813 86 T-602 P.008/016 F-764

Doc Code: PPH.PCT.652
Document Description: Petition to make special under PCT-Patent Pros Hwy

PTO/SB/20PCT-EP (05-10)
Approved for use through 01/31/2012. OMB 0651-0058
U.S. Patent and Trademark Office; U. S. DEPARTMENT OF COMMERCE
Under the Paperwork Reduction Act of 1995, no persons are required to respond to a collection of information unless it displays a valid OMB control number.

REQUEST FOR PARTICIPATION IN THE PATENT COOPERATION TREATY - PATENT PROSECUTION HIGHWAY (PCT-PPH) PILOT PROGRAM BETWEEN THE EUROPEAN PATENT OFFICE (EPO) AND THE USPTO

Application No:	13/095,478	Filing date:	April 27, 2011
First Named Inventor:	Paal Kristian Skryten		
Title of the Invention:	Electric Power Distribution Arrangement And A Switchgear Provided Therewith		

THIS REQUEST FOR PARTICIPATION IN THE PCT-PPH PILOT PROGRAM ALONG WITH THE REQUIRED DOCUMENTS MUST BE SUBMITTED VIA EFS-WEB. INFORMATION REGARDING EFS-WEB IS AVAILABLE AT HTTP://WWW.USPTO.GOV/EBC/EFS_HELP.HTML

APPLICANT HEREBY REQUESTS PARTICIPATION IN THE PCT-PPH PROGRAM AND PETITIONS TO MAKE THE ABOVE-IDENTIFIED APPLICATION SPECIAL UNDER THE PCT-PPH PROGRAM.

The above-identified application is (1) a national stage entry of the corresponding PCT application, or (2) a national stage entry of another PCT application which claims priority to the corresponding PCT application, or (3) a national application that claims domestic/ foreign priority to the corresponding PCT application, or (4) a national application which forms the basis for the priority claim in the corresponding PCT application, or (5) a continuing application of a U.S. application that satisfies one of (1) to (4) above, or (6) a U.S. application that claims domestic benefit to a U.S. provisional application which forms the basis for the priority claim in the corresponding PCT application.

The corresponding PCT application number(s) is/are: PCT/EP2009/063683

The international filing date of the corresponding PCT application(s) is/are: October 19, 2009

I. List of Required Documents:

a. **A copy of the latest international work product (WO/ISA, WO/IPEA, or IPER) in the above–identified corresponding PCT application(s)**

☒ Is attached

☐ Is not attached because the document is already in the U.S. application.

b. **A copy of all claims which were indicated as having novelty, inventive step and industrial applicability in the above-identified corresponding PCT application(s).**

☒ Is attached.

☐ Is not attached because the document is already in the U.S. application.

c. **English translations of the documents in a. and b. above are attached (if the documents are not in the English language). A statement that the English translation is accurate is attached for the document in b. above.**

This collection of information is required by 35 U.S.C. 119, 37 CFR 1.55, and 37 CFR 1.102(d). The information is required to obtain or retain a benefit by the public, which is to file (and by the USPTO to process) an application. Confidentiality is governed by 35 U.S.C. 122 and 37 CFR 1.11 and 1.14. This collection is estimated to take 2 hours to complete, including gathering, preparing, and submitting the completed application form to the USPTO. Time will vary depending upon the individual case. Any comments on the amount of time you require to complete this form and/or suggestions for reducing this burden should be sent to the Chief Information Officer, U.S. Patent and Trademark Office, U.S. Department of Commerce, P.O. Box 1450, Alexandria, VA 22313-1450. DO NOT SEND FEES OR COMPLETED FORMS TO THIS ADDRESS.

PTO/SB/20PCT-EP (05-10)
Approved for use through 01/31/2012. OMB 0651-0058
U.S.Patent and Trademark Office; U.S. DEPARTMENT OF COMMERCE
Under the Paperwork Reduction Act of 1995, no persons are required to respond to a collection of information unless it displays a valid OMB control number.

REQUEST FOR PARTICIPATION IN THE PCT-PPH PILOT PROGRAM BETWEEN THE EPO AND THE USPTO

(continued)

Application No.:	13/095,478
First Named Inventor:	Paal Kristian Skryten

d. **(1) An information disclosure statement listing the documents cited in the international work products (ISR, WO/ISA, WO/IPEA, IPER) of the corresponding PCT application.**

☐ Is attached

☒ Has already been filed in the above-identified U.S. application on April 27, 2011

(2) Copies of all documents (except) for U.S. patents or U.S. patent application publications)

☐ Are attached.

☒ Have already been filed in the above-identified U.S. application on April 27, 2011

II. Claims Correspondence Table:

Claims in US Application	Patentable Claims in the corresponding PCT Application	Explanation regarding the correspondence
1	1	Corresponding claim (same)
2	2	Corresponding claim (same)
3	3	Corresponding claim (same)
4	4	Corresponding claim (same)
5	5	Corresponding claim (single dependency)
6	6	N/A (Cancelled)
7	7	Corresponding claim (single dependency)
8	8	N/A (Cancelled)

III. All the claims in the US application sufficiently correspond to the patentable claims in the corresponding PCT application.

Signature /Wesley W. Whitmyer, Jr./	Date June 3, 2011
Name (Print/Typed) Wesley W. Whitmyer, Jr.	Registration Number 33,558

Privacy Act Statement

The **Privacy Act of 1974 (P.L. 93-579)** requires that you be given certain information in connection with your submission of the attached form related to a patent application or patent. Accordingly, pursuant to the requirements of the Act, please be advised that: (1) the general authority for the collection of this information is 35 U.S.C. 2(b)(2); (2) furnishing of the information solicited is voluntary; and (3) the principal purpose for which the information is used by the U.S. Patent and Trademark Office is to process and/or examine your submission related to a patent application or patent. If you do not furnish the requested information, the U.S. Patent and Trademark Office may not be able to process and/or examine your submission, which may result in termination of proceedings or abandonment of the application or expiration of the patent.

The information provided by you in this form will be subject to the following routine uses:

1. The information on this form will be treated confidentially to the extent allowed under the Freedom of Information Act (5 U.S.C. 552) and the Privacy Act (5 U.S.C 552a). Records from this system of records may be disclosed to the Department of Justice to determine whether disclosure of these records is required by the Freedom of Information Act.
2. A record from this system of records may be disclosed, as a routine use, in the course of presenting evidence to a court, magistrate, or administrative tribunal, including disclosures to opposing counsel in the course of settlement negotiations.
3. A record in this system of records may be disclosed, as a routine use, to a Member of Congress submitting a request involving an individual, to whom the record pertains, when the individual has requested assistance from the Member with respect to the subject matter of the record.
4. A record in this system of records may be disclosed, as a routine use, to a contractor of the Agency having need for the information in order to perform a contract. Recipients of information shall be required to comply with the requirements of the Privacy Act of 1974, as amended, pursuant to 5 U.S.C. 552a(m).
5. A record related to an International Application filed under the Patent Cooperation Treaty in this system of records may be disclosed, as a routine use, to the International Bureau of the World Intellectual Property Organization, pursuant to the Patent Cooperation Treaty.
6. A record in this system of records may be disclosed, as a routine use, to another federal agency for purposes of National Security review (35 U.S.C. 181) and for review pursuant to the Atomic Energy Act (42 U.S.C. 218(c)).
7. A record from this system of records may be disclosed, as a routine use, to the Administrator, General Services, or his/her designee, during an inspection of records conducted by GSA as part of that agency's responsibility to recommend improvements in records management practices and programs, under authority of 44 U.S.C. 2904 and 2906. Such disclosure shall be made in accordance with the GSA regulations governing inspection of records for this purpose, and any other relevant (*i.e.*, GSA or Commerce) directive. Such disclosure shall not be used to make determinations about individuals.
8. A record from this system of records may be disclosed, as a routine use, to the public after either publication of the application pursuant to 35 U.S.C. 122(b) or issuance of a patent pursuant to 35 U.S.C. 151. Further, a record may be disclosed, subject to the limitations of 37 CFR 1.14, as a routine use, to the public if the record was filed in an application which became abandoned or in which the proceedings were terminated and which application is referenced by either a published application, an application open to public inspection or an issued patent.
9. A record from this system of records may be disclosed, as a routine use, to a Federal, State, or local law enforcement agency, if the USPTO becomes aware of a violation or potential violation of law or regulation.

UNITED STATES PATENT AND TRADEMARK OFFICE

UNITED STATES DEPARTMENT OF COMMERCE
United States Patent and Trademark Office
Address: COMMISSIONER FOR PATENTS
P.O. Box 1450
Alexandria, Virginia 22313-1450
www.uspto.gov

APPLICATION NO.	FILING DATE	FIRST NAMED INVENTOR	ATTORNEY DOCKET NO.	CONFIRMATION NO.
13/095,478	04/27/2011	Paal Kristian Skryten	05144-P0038A	2702

24126 7590 06/13/2011

ST. ONGE STEWARD JOHNSTON & REENS, LLC
986 BEDFORD STREET
STAMFORD, CT 06905-5619

EXAMINER	
ART UNIT	PAPER NUMBER
2835	

MAIL DATE	DELIVERY MODE
06/13/2011	PAPER

Please find below and/or attached an Office communication concerning this application or proceeding.

The time period for reply, if any, is set in the attached communication.

UNITED STATES PATENT AND TRADEMARK OFFICE

Commissioner for Patents
United States Patent and Trademark Office
P.O. Box 1450
Alexandria, VA 22313-1450
www.uspto.gov

ST. ONGE STEWARD JOHNSTON & REENS, LLC
986 BEDFORD STREET
STAMFORD CT 06905-5619

In re Application of
SKRYTEN et al.
Application No.: 13/095,478
Filed: 27 April 2011
Attorney Docket No.: 05144-P0038A
For: ELECTRIC POWER DISTRIBUTION ARRANGEMENT AND A SWITCHGEAR PROVIDED THEREWITH

: DECISION ON REQUEST TO
: PARTICIPATE IN THE PATENT
: PROSECUTION HIGHWAY
: PROGRAM AND PETITION
: TO MAKE SPECIAL UNDER
: 37 CFR 1.102(a)

This is a decision on the request to participate in the PCT Patent Prosecution Highway (PCT-PPH) pilot program and the petition under 37 CFR 1.102(a), filed 03 June 2011, to make the above-identified application special.

The request and petition are **GRANTED**.

Discussion

A grantable request to participate in the PCT-PPH pilot program and petition to make special require:

(1) The U.S. application must have an eligible relationship to one or more PCT applications where the ISA or IPEA are the JPO, EPO, KIPO, or USPTO;

(2) At least one claim in the PCT application has novelty, inventive step, and industrial applicability and must be free of any observations in Box VIII in the latest work product in the international stage or applicant must identify and explain why the claim(s) is/are not subject to the observation in Box VIII;

(3) Applicant must submit a copy of the claim(s) from the PCT application(s) that have novelty, inventive step, and industrial applicability along with an English translation thereof and a statement that the English translation is accurate, if the claims are not in the English language;

(4) All the claims in the U.S. application must sufficiently correspond or be amended to sufficiently correspond to the claim(s) that have novelty, inventive step, and industrial applicability in the PCT application(s);

(5) Examination of the U.S. application has not begun;

(6) Applicant must submit a copy of the latest international work product from the PCT application indicating that the claim(s) have novelty, inventive step, and industrial applicability along with an English translation thereof and a statement that the English translation is accurate if the latest international work product is not in the English language;

(7) Applicant must submit an IDS listing the documents cited by the PCT examiner in the international work product along with copies of documents except U.S. patents or U.S. patent application publications.

The request to participate in the PCT-PPH pilot program and petition comply with the above requirements. Accordingly, the above-identified application has been accorded "special" status.

Telephone inquiries concerning this decision should be directed to Lee W. Young at 571-272-4549.

All other inquiries concerning the examination or status of the application is accessible in the PAIR system at http://www.uspto.gov/ebc.index.html.

This application will be forwarded to the examiner for action on the merits commensurate with this decision once this application's formality reviews have been completed.

Lee W. Young
TQAS Technology Center 2800 - Semiconductors,
Electrical & Optical Systems & Components

Doc Code: PET.GREEN
Document Description: Petition for Green Tech Pilot

PTO/SB/420 (03-11)

PETITION TO MAKE SPECIAL UNDER THE GREEN TECHNOLOGY PILOT PROGRAM

Attorney Docket Number: 3449-1664PUS1	Application Number (if known): NEW	Filing date: April 27, 2011

First Named Inventor: Bum Chul CHO

Title: LIGHT EMITTING DEVICE PACKAGE AND LIGHTING SYSTEM HAVING THE SAME

APPLICANT HEREBY REQUESTS TO PARTICIPATE IN THE GREEN TECHNOLOGY PILOT PROGRAM FOR THE ABOVE-IDENTIFIED APPLICATION. See Instruction Sheet on page 2.

This petition must be timely filed electronically using the USPTO electronic filing system, EFS-Web.

1. By filing this petition:

   Applicant is requesting early publication: Applicant hereby requests early publication under 37 CFR 1.219 and the publication fee set forth in 37 CFR 1.18(d) accompanies this request.

2. By filing this petition: applicant is agreeing to make an election without traverse in a telephonic interview and elect an invention that meets the eligibility requirements for the Green Technology Pilot Program, if the Office determines that the claims are not obviously directed to a single invention. See Instruction Sheet.

3. This request is accompanied by statements of special status for the eligibility requirement.

4. The application contains no more than three (3) independent claims and twenty (20) total claims.

5. The application does not contain any multiple dependent claims.

6. Other attachments: _____

Signature	Date April 27, 2011
Name (Print/Typed) James T. Eller, Jr.	Registration Number 39,538

Note: *Signatures of all the inventors or assignees of record of the entire interest or their representative(s) are required in accordance with 37 CFR 1.33 and 11.18. Please see 37 CFR 1.4(d) for the form of the signature. If necessary, submit multiple forms for more than one signature, see below*.*

■ *Total of 1 forms are submitted.

If you need assistance in completing the form, call 1-800-PTO-9199 and select option 2.

Instruction Sheet for
Petition to Make Special Under the Green Technology Pilot Program

(Not to be Submitted to the USPTO)

The following is a summary of the requirements (for more information see the notices (i) "Pilot Program for Green Technologies Including Greenhouse Gas Reduction," (ii) "Elimination of Classification Requirement in the Green Technology Pilot Program," and (iii) "Expansion and Extension of the Green Technology Pilot Program," available on the USPTO web site at http://www.uspto.gov/patents/init_events/green_tech.jsp):

(1) The application must be a non-reissue, non-provisional utility application filed under 35 U.S.C. 111(a), or an international application that has entered the national stage in compliance with 35 U.S.C. 371, irrespective of the filing date of the application. Reexamination proceedings are excluded from this pilot program.

(2) The application must contain three or fewer independent claims and twenty or fewer total claims. The application must not contain any multiple dependent claims. For an application that contains more than three independent claims or twenty total claims, or multiple dependent claims, applicant must file a preliminary amendment in compliance with 37 CFR 1.121 to cancel the excess claims and/or the multiple dependent claims at the time the petition to make special is filed.

(3) The claims must be directed to a single invention that materially enhances the quality of the environment, or that materially contributes to: (1) the discovery or development of renewable energy resources; (2) the more efficient utilization and conservation of energy resources; or (3) green house gas emission reduction (see the eligibility requirements of sections II and III of the notice (i) cited above). The petition must include a statement that, if the USPTO determines that the claims are directed to multiple inventions (e.g., in a restriction requirement), applicant will agree to make an election without traverse in a telephonic interview, and elect an invention that meets the eligibility requirements in section II or III of the notice (i) cited above.

(4) The petition to make special must be timely filed electronically using the USPTO electronic filing system, EFS-Web, and selecting the document description of "Petition for Green Tech Pilot" on the EFS-Web screen. Applicant should use form PTO/SB/420, which is available as a Portable Document Format (PDF) fillable form in EFS-Web and on the USPTO Web site.

(5) The petition to make special must be filed at least one day prior to the date that a first Office action (which may be an Office action containing only a restriction requirement) appears in the Patent Application Information Retrieval (PAIR) system. Applicant may check the status of the application using PAIR.

(6) The petition to make special must be accompanied by a request for early publication in compliance with 37 CFR 1.219 and the publication fee set forth in 37 CFR 1.18(d).

Privacy Act Statement

The **Privacy Act of 1974 (P.L. 93-579)** requires that you be given certain information in connection with your submission of the attached form related to a patent application or patent. Accordingly, pursuant to the requirements of the Act, please be advised that: (1) the general authority for the collection of this information is 35 U.S.C. 2(b)(2); (2) furnishing of the information solicited is voluntary; and (3) the principal purpose for which the information is used by the U.S. Patent and Trademark Office is to process and/or examine your submission related to a patent application or patent. If you do not furnish the requested information, the U.S. Patent and Trademark Office may not be able to process and/or examine your submission, which may result in termination of proceedings or abandonment of the application or expiration of the patent.

The information provided by you in this form will be subject to the following routine uses:

1. The information on this form will be treated confidentially to the extent allowed under the Freedom of Information Act (5 U.S.C. 552) and the Privacy Act (5 U.S.C 552a). Records from this system of records may be disclosed to the Department of Justice to determine whether disclosure of these records is required by the Freedom of Information Act.
2. A record from this system of records may be disclosed, as a routine use, in the course of presenting evidence to a court, magistrate, or administrative tribunal, including disclosures to opposing counsel in the course of settlement negotiations.
3. A record in this system of records may be disclosed, as a routine use, to a Member of Congress submitting a request involving an individual, to whom the record pertains, when the individual has requested assistance from the Member with respect to the subject matter of the record.
4. A record in this system of records may be disclosed, as a routine use, to a contractor of the Agency having need for the information in order to perform a contract. Recipients of information shall be required to comply with the requirements of the Privacy Act of 1974, as amended, pursuant to 5 U.S.C. 552a(m).
5. A record related to an International Application filed under the Patent Cooperation Treaty in this system of records may be disclosed, as a routine use, to the International Bureau of the World Intellectual Property Organization, pursuant to the Patent Cooperation Treaty.
6. A record in this system of records may be disclosed, as a routine use, to another federal agency for purposes of National Security review (35 U.S.C. 181) and for review pursuant to the Atomic Energy Act (42 U.S.C. 218(c)).
7. A record from this system of records may be disclosed, as a routine use, to the Administrator, General Services, or his/her designee, during an inspection of records conducted by GSA as part of that agency's responsibility to recommend improvements in records management practices and programs, under authority of 44 U.S.C. 2904 and 2906. Such disclosure shall be made in accordance with the GSA regulations governing inspection of records for this purpose, and any other relevant (*i.e.*, GSA or Commerce) directive. Such disclosure shall not be used to make determinations about individuals.
8. A record from this system of records may be disclosed, as a routine use, to the public after either publication of the application pursuant to 35 U.S.C. 122(b) or issuance of a patent pursuant to 35 U.S.C. 151. Further, a record may be disclosed, subject to the limitations of 37 CFR 1.14, as a routine use, to the public if the record was filed in an application which became abandoned or in which the proceedings were terminated and which application is referenced by either a published application, an application open to public inspection or an issued patent.
9. A record from this system of records may be disclosed, as a routine use, to a Federal, State, or local law enforcement agency, if the USPTO becomes aware of a violation or potential violation of law or regulation.

Docket No.: 3449-1664PUS1
(Patent)

IN THE UNITED STATES PATENT AND TRADEMARK OFFICE

Patent Application of:	Bum Chul CHO		
Application No.:	NEW	Confirmation No.:	To be assigned
Filed:	April 27, 2011	Art Unit:	To be assigned
For:	LIGHT EMITTING DEVICE PACKAGE AND LIGHTING SYSTEM HAVING THE SAME	Examiner:	To be assigned

STATEMENT OF SPECIAL STATUS FOR THE ELIGIBILITY REQUIREMENT UNDER THE GREEN TECHNOLOGY PILOT PROGRAM

Commissioner for Patents
P.O. Box 1450
Alexandria, VA 22313-1450

Sir:

In support of the Petition to Make Special Under the Green Technology Pilot Program, it is respectfully submitted that the basis for the requested special status is that the invention claimed in the above-identified patent application materially contributes to the development of environmental quality and energy conservation. Specifically, the invention relates to a semiconductor light emitting device as disclosed in the specification.

For example, semiconductor light emitting devices have a much longer life-span than conventional light sources such as fluorescent tubes or other traditional light sources. Semiconductor light emitting devices also use less energy or power to operate than other traditional light sources. Thus, the environmental quality is significantly improved and energy is conserved.

Additionally, by filing this petition, Applicants agree to make an election without traverse in a telephone interview and elect an invention that meets the eligibility requirements set forth in the notice titled "Pilot Program for Green Technologies Including Greenhouse Gas Reduction,"

as modified by the notice titled "Elimination of Classification Requirement in the Green Technology Pilot Program," each of which was published in the Federal Register, if the Office determines that the claims are not obviously directed to a single invention.

It is also submitted that this application meets the eligibility requirements to participate in the Green Technology Pilot Program, as listed in the attached Petition to Make Special Under the Green Technology Pilot Program.

Accordingly, it is respectfully requested the Petition be granted.

Should there be any outstanding matters that need to be resolved in the present application, the Examiner is respectfully requested to contact the undersigned below to conduct an interview in an effort to expedite prosecution in connection with the present application.

If necessary, the Director is hereby authorized in this, concurrent, and future replies to charge any fees required during the pendency of the above-identified application or credit any overpayment to Deposit Account No. 02-2448.

Dated: April 27, 2011

Respectfully submitted,

By _____

James T. Eller, Jr.
Registration No.: 39538
BIRCH, STEWART, KOLASCH & BIRCH, LLP
8110 Gatehouse Road, Suite 100 East
P.O. Box 747
Falls Church, VA 22040-0747
703-205-8000

UNITED STATES PATENT AND TRADEMARK OFFICE

UNITED STATES DEPARTMENT OF COMMERCE
United States Patent and Trademark Office
Address: COMMISSIONER FOR PATENTS
P.O. Box 1450
Alexandria, Virginia 22313-1450
www.uspto.gov

APPLICATION NO.	FILING DATE	FIRST NAMED INVENTOR	ATTORNEY DOCKET NO.	CONFIRMATION NO.
13/095,595	04/27/2011	Bum Chul CHO	3449-1664PUS1	2937

2292 7590 06/15/2011
BIRCH STEWART KOLASCH & BIRCH
PO BOX 747
FALLS CHURCH, VA 22040-0747

EXAMINER	
ART UNIT	PAPER NUMBER
2811	

NOTIFICATION DATE	DELIVERY MODE
06/15/2011	ELECTRONIC

Please find below and/or attached an Office communication concerning this application or proceeding.

The time period for reply, if any, is set in the attached communication.

Notice of the Office communication was sent electronically on above-indicated "Notification Date" to the following e-mail address(es):

mailroom@bskb.com

UNITED STATES PATENT AND TRADEMARK OFFICE

Commissioner for Patents
United States Patent and Trademark Office
P.O. Box 1450
Alexandria, VA 22313-1450
www.uspto.gov

BIRCH STEWART KOLASCH & BIRCH
PO BOX 747
FALLS CHURCH VA 22040-0747

In re Application of	:	
Bum Chul CHO	:	DECISION ON PETITION
Application No. 13/095,595	:	TO MAKE SPECIAL UNDER
Filed: April 27, 2011	:	THE GREEN TECHNOLOGY
Attorney Docket No. 3449-1664PUS1	:	PILOT PROGRAM

This is a decision on the petition under 37 CFR 1.102, filed on April 27, 2011, to make the above-identified application special under the pilot program for applications pertaining to Green Technologies as set forth 74 Federal Register Notice 64666 (December 8, 2009) and amended by 75 Federal Register Notice 28554 (May 21, 2010) and 75 Federal Register Notice 69049 (November 10, 2010).

The petition is **DISMISSED**.

If reconsideration of this decision is desired, a petition for reconsideration must be filed within ONE (1) MONTH OR THIRTY (30) DAYS from the mail date of this decision, whichever is longer. No extension of this time limit can be granted under 37 CFR 1.136(a) or (b). The petition for reconsideration should include an exhaustive attempt to provide the lacking item(s) noted below, since, after a decision on the petition for reconsideration, no further reconsideration or review of the matter will be undertaken by the Director.

A grantable petition to make an application special under 37 CFR 1.102 and the pilot program as set forth in 74 FR 64666 must be directed to a nonprovisional application filed under 35 USC 111(a) or be a national stage entry under 35 USC 371, exclusive of any reissue applications and be filed prior to the date of the notice, December 8, 2009.

In order to qualify for special status, the following requirements must be met. 1) The application must have no more than 3 independent claims and no more than 20 total claims. 2) The application must not contain any multiple dependent claims. 3) The petition must state the basis for seeking special status, i.e., the claimed invention either: A) materially enhances the quality of the environment or B) materially contributes to: i) the discovery or development of renewable energy resources, ii) the more efficient utilization and conservation of energy resources, or iii) greenhouse gas emission reduction. 4) If the disclosure is not clear on its face that the claimed invention materially contributes under category (A) or (B), the petition must be accompanied by a statement by the applicant, assignee, or an attorney/agent registered to practice before the Office explaining how the materiality standard is met. 5) A statement that applicant will agree to

make an election without traverse in a telephonic interview if a restriction requirement is made by the examiner. 6) The petition to make special must be filed electronically. 7) The petition must be filed at least one day prior to the date that a first Office Action appears in the Patent Application Information Retrieval (PAIR) system. 8) The petition must be accompanied by a request for early publication in compliance with 37 CFR 1.219 and include the publication fee as set forth in 37 CFR 1.18(d).

The requirement for a fee for consideration of the petition to make special for applications pertaining to Green Technologies has been waived.

The petition lacks item 4.

In regard to item 4, applicant's statement pertaining to how the materiality standard is met does not satisfy the requirements for this pilot. The petition alleges that the claimed invention contributes to more efficient utilization and conservation of energy. The claims do not limited the light emitting device to an LED or semiconductor based light emitting device. The materiality standard does not permit an applicant to speculate as to how a hypothetical end-user might specially apply the invention in a manner that could contribute to more efficient utilization and conservation of energy. Any argument that the claimed invention can be used with LEDs is considered speculate as to how a hypothetical end-user might specially apply the claimed invention. Favorable consideration would be given if the claims were amended to specifically require the light emitting device to be an LED or semiconductor based light emitting device.

Any reconsideration of this decision should be submitted through the USPTO electronic filing system, EFS-Web, and selecting the document description of "Petition for Green Tech Pilot" on the EFS-Web screen.

Telephone inquiries concerning this decision should be directed to Lee W. Young at 571-272-4549.

The application is being forwarded to the Technology Center Art Unit 2811 for action in its regular turn.

Lee W. Young
Quality Assurance Specialist
Technology Center 2800

REMARKS

Claim Amendments

Claims 1, 10-13 and 20 have been amended to the term "light emitting device" to read as "light emitting diode". No new matter has been entered as support for this change can be found throughout . Claims 1-20 are pending.

Request for Reconsideration to Make Special Under the Green Technology Pilot Program

Applicant respectfully requests reconsideration of the petition filed April 27, 2011. In support of Applicant request, Applicant has amended claims 1, 10, 11, 12, 13 and 20 to recite a light emitting diode (LED) as suggested in the Petition on Decision. For example, semiconductor light emitting devices made with LEDs have a much longer life-span than conventional light sources such as fluorescent tubes or other traditional light sources. Semiconductor light emitting devices made with LEDs also use less energy or power to operate than other traditional light sources. Thus, the environmental quality is significantly improved and energy is conserved.

Applicant respectfully submit that this application now meets the eligibility requirements to participate in the Green Technology Pilot Program. Applicant respectfully requests that the petition now be granted.

Conclusion

In view of the above remarks, it is believed that the claims clearly distinguish over the patents relied on by the Examiner, either alone or in combination. In view of this, reconsideration of the rejections and allowance of all the claims are respectfully requested.

Should there be any outstanding matters that need to be resolved in the present application, the Examiner is respectfully requested to contact the undersigned to conduct an interview in an effort to expedite prosecution in connection with the present application.

UNITED STATES PATENT AND TRADEMARK OFFICE

UNITED STATES DEPARTMENT OF COMMERCE
United States Patent and Trademark Office
Address: COMMISSIONER FOR PATENTS
P.O. Box 1450
Alexandria, Virginia 22313-1450
www.uspto.gov

APPLICATION NO.	FILING DATE	FIRST NAMED INVENTOR	ATTORNEY DOCKET NO.	CONFIRMATION NO.
13/095,595	04/27/2011	Bum Chul CHO	3449-1664PUS1	2937

2292 7590 08/04/2011
BIRCH STEWART KOLASCH & BIRCH
PO BOX 747
FALLS CHURCH, VA 22040-0747

EXAMINER	
ART UNIT	PAPER NUMBER
2811	

NOTIFICATION DATE	DELIVERY MODE
08/04/2011	ELECTRONIC

Please find below and/or attached an Office communication concerning this application or proceeding.

The time period for reply, if any, is set in the attached communication.

Notice of the Office communication was sent electronically on above-indicated "Notification Date" to the following e-mail address(es):

mailroom@bskb.com

UNITED STATES PATENT AND TRADEMARK OFFICE

Commissioner for Patents
United States Patent and Trademark Office
P.O. Box 1450
Alexandria, VA 22313-1450
www.uspto.gov

BIRCH STEWART KOLASCH & BIRCH
PO BOX 747
FALLS CHURCH VA 22040-0747

AUG 0 4 2011

In re Application of	:	
Cho	:	DECISION ON PETITION
Application No. 13/095,595	:	TO MAKE SPECIAL UNDER
Filed: 4/27/2011	:	THE GREEN TECHNOLOGY
Attorney Docket No. **3449-1664PUS1**	:	PILOT PROGRAM

This is a decision on the request for reconsideration, filed 7/15/2011, to make the above-identified application special under the pilot program for applications pertaining to Green Technologies as set forth in 74 Federal Register Notice 64666 (December 8, 2009) and amended by 75 Federal Register Notice 28554 (May 21, 2010) and 75 Federal Register Notice 69049 (November 10, 2010).

The petition is **GRANTED**.

A grantable petition to make an application special under 37 CFR 1.102 and the pilot program as set forth in 74 FR 64666 must be directed to a nonprovisional application filed under 35 USC 111(a) or be a national stage entry under 35 USC 371, exclusive of any reissue applications.

In order to qualify for special status, the following requirements must be met. 1) The application must have no more than 3 independent claims and no more than 20 total claims. 2) The application must not contain any multiple dependent claims. 3) The petition must state the basis for seeking special status, i.e., the claimed invention either: A) materially enhances the quality of the environment or B) materially contributes to: i) the discovery or development of renewable energy resources, ii) the more efficient utilization and conservation of energy resources, or iii) greenhouse gas emission reduction. 4) If the disclosure is not clear on its face that the claimed invention materially contributes under category (A) or (B), the petition must be accompanied by a statement by the applicant, assignee, or an attorney/agent registered to practice before the Office explaining how the materiality standard is met. 5) A statement that applicant will agree to make an election without traverse in a telephonic interview if a restriction requirement is made by the examiner. 6) The petition to make special must be filed electronically. 7) The petition must be filed at least one day prior to the date that a first Office Action appears in the Patent Application Information Retrieval (PAIR) system. 8) The petition must be accompanied by a request for early publication in compliance with 37 CFR 1.219 and include the publication fee as set forth in 37 CFR 1.18(d).

The requirement for a fee for consideration of the petition to make special for applications pertaining to Green Technologies has been waived.

The instant petition complies with items 1 – 8 above. Accordingly, the above-identified application has been accorded "special" status.

Telephone inquires concerning this decision should be directed to Tom Dunn at 571-272-1171.

The application is being forwarded to the Technology Center Art Unit 2811 for action on the merits commensurate with this decision.

/Tom Dunn/

Tom Dunn
Quality Assurance Specialist
Technology Center 1700

UNITED STATES PATENT AND TRADEMARK OFFICE

UNITED STATES DEPARTMENT OF COMMERCE
United States Patent and Trademark Office
Address: COMMISSIONER FOR PATENTS
P.O. Box 1450
Alexandria, Virginia 22313-1450
www.uspto.gov

APPLICATION NO.	FILING DATE	FIRST NAMED INVENTOR	ATTORNEY DOCKET NO.	CONFIRMATION NO.
13/095,609	04/27/2011	Damir R. Shiyafetdinov	031185-00036	2962

38485 7590 05/11/2011

ARENT FOX LLP
1675 BROADWAY
NEW YORK, NY 10019

EXAMINER	
HWANG, JOON H	

ART UNIT	PAPER NUMBER
2447	

NOTIFICATION DATE	DELIVERY MODE
05/11/2011	ELECTRONIC

Please find below and/or attached an Office communication concerning this application or proceeding.

The time period for reply, if any, is set in the attached communication.

Notice of the Office communication was sent electronically on above-indicated "Notification Date" to the following e-mail address(es):

NYIPDocket@arentfox.com
Patent_Mail@arentfox.com

UNITED STATES PATENT AND TRADEMARK OFFICE

Commissioner for Patents
United States Patent and Trademark Office
P.O. Box 1450
Alexandria, VA 22313-1450
www.uspto.gov

MAILED

MAY 11 2011

DIRECTOR OFFICE
TECHNOLOGY CENTER

Michael Fainberg
ARENT FOX LLP
1675 BROADWAY
NEW YORK NY 10019

In re Application of: SHIYAFETDINOV et. al.
Serial No.: **13/095,609**
Filed: April 27, 2011
Docket: 031185-00036
Title: SYSTEM AND METHOD FOR REMOTE ADMINISTRATION OF COMPUTER NETWORK

DECISION ON PETITION TO MAKE SPECIAL FOR NEW APPLICATION UNDER 37 C.F.R. § 1.102 & M.P.E.P. § 708.02

This is a decision on the petition filed on April 27, 2011 to make the above-identified application special for accelerated examination procedure under 37 C.F.R. § 1.102(d).

The petition to make the application special is **GRANTED**.

The application is eligible for accelerated examination and the petition complies with the conditions for granting the application special status pursuant to the "Change to Practice for Petitions in Patent Applications to Make Special and for Accelerated Examination" published June 26, 2006, in the Federal Register. (71 Fed. Reg. 36323).

The prosecution of the instant application will be conducted expeditiously according to the following guidelines.

1. The application will be docketed to an examiner and taken up for action within two weeks of the date of this decision.

2. Restriction Practice:
If the examiner determines that the claims are not directed to a single invention, a telephone request to elect one single invention will be made pursuant to MPEP 812.01. As a prerequisite to the grant of this petition, the applicant has agreed to make an oral election, by telephone, without traverse. If the applicant refuses to make an election without traverse, or the examiner cannot reach the applicant after a reasonable effort, the examiner will treat the first claimed invention (invention defined by claim 1) as having being constructively elected without traverse for examination.

3. Office action:

If it is determined that, after appropriate consultation, there is a potential rejection or any other issue to be addressed, the examiner will telephone the applicant and arrange an interview to discuss and resolve the issue. An Office action, other than a Notice of Allowance and Fee(s) Due (Notice of Allowance), will not be issued unless either: 1) an interview was conducted but did not result in agreed to action that places the application in condition for allowance, or, 2) a determination is made that an interview would be unlikely to result in the application being placed in condition for allowance, and 3) an internal conference has been held to review any rejection of any claim.

4. Time for Reply:
An Office action other than a Notice of Allowance or a final Office action will set a shortened statutory period of one month or thirty days, whichever is longer, for reply with no extension of time available under 37 CFR 1.136(a). Failure to timely file a reply within this non-extendible period for reply will result in the abandonment of the application.

5. Reply by Applicant:
A timely reply to an Office action other than the Notice of Allowance must be submitted electronically via EFS or EFS-web and limited to addressing the rejections, objections and requirement made. Any amendment that attempts to: 1) add claims which would result in more than three pending independent claims or more than twenty pending total claims; 2) present claims not encompassed by the pre-examination search or an updated accelerated examination support document; or 3) present claims that are directed a non-elected invention or an invention other than that previously claimed and examined in the application, will be treated as not fully responsive and will not be entered.

For any amendment to the claims (including any new claim) that is not encompassed by the accelerated examination support document, applicant must provide an updated accelerated examination support document that encompasses the amended or new claims at the time of filing of the amendment.

To proceed expeditiously with the examination, it is recommended that a reply with amendments made to any claim or with any new claim being added be accompanied by an updated accelerated examination support document or a statement explaining how the amended or new claim is supported by the original accelerated examination support document.

6. Information Disclosure Statement (IDS):
Any IDS filed during prosecution must be submitted electronically via EFS or EFS-web, accompanied by an updated accelerated examination support document, and be in compliance with 37 CFR 1.97 and 1.98.

7. Post-Allowance Processing:

To expedite processing of the allowed application into a patent, the applicant must: 1) pay the required fees within one month of the date of the Notice of Allowance, and 2) not file any post allowance papers not required by the Office. In no event may the issue fee be paid and accepted later than three months from the date of the Notice of Allowance.

8. After-Final and Appeal Procedures:
To expedite prosecution, after receiving the final Office action, applicant must: 1) promptly file a notice of appeal, an appeal brief and appeal fees; and 2) not request a pre-appeal brief conference.

   Any amendment, affidavit or other evidence filed after final Office action must comply with applicable rules and the requirements outlined in numbered paragraphs 5 and 6 above.

   On appeal, the application will proceed according to normal appeal procedures. After appeal, the application will again be treated special.

9. Proceedings Outside the Normal Examination Process:
If the application becomes involved in a proceeding that is outside the normal examination process (e.g., a secrecy order, national security review, interference proceeding, petitions under 37 CFR 1.181, 182 or 183), the application will be treated special before and after such proceeding.

10. Final Disposition:
The twelve-month goal of this accelerated examination procedure ends with a final disposition. The mailing of a final Office action, a Notice of Allowance, the filing of a Notice of Appeal, or the filing of a Request for Continued Examination (RCE) is the final disposition.

If, during prosecution, a paper is not filed electronically using EFS-web, a reply is filed but is not fully responsive, the application is involved in an appeal, or a proceeding outside normal examination process, the application will still be examined expeditiously, however, the final disposition may occur more than twelve months from the filing of the application. In addition, Applicant is reminded that due to the dismissal of the previous petition submission, examination may not be completed within twelve months of the filing date of the application.

Any inquiry regarding this decision should be directed to Beatriz Prieto, Quality Assurance Specialist, at (571) 272-3902. A second point of Contact is Kim Huynh at (571)-272-4147.

/Beatriz Prieto/

Beatriz Prieto, Quality Assurance Specialist
Technology Center 2400
Networking, Multiplexing, Cable and Security

UNITED STATES PATENT AND TRADEMARK OFFICE

UNITED STATES DEPARTMENT OF COMMERCE
United States Patent and Trademark Office
Address: COMMISSIONER FOR PATENTS
P.O. Box 1450
Alexandria, Virginia 22313-1450
www.uspto.gov

APPLICATION NO.	FILING DATE	FIRST NAMED INVENTOR	ATTORNEY DOCKET NO.	CONFIRMATION NO.
13/095,775	04/27/2011	Chiu Ngo	SAM2B-P.e159	3286

97001 7590 10/18/2011

Myers Andras Sherman & Zarrabian LLP
(Samsung R&D Center)
1411 5th Street, Suite 306
Santa Monica, CA 90401

EXAMINER	
DASTOURI, MEHRDAD	

ART UNIT	PAPER NUMBER
2486	

MAIL DATE	DELIVERY MODE
10/18/2011	PAPER

Please find below and/or attached an Office communication concerning this application or proceeding.

The time period for reply, if any, is set in the attached communication.

UNITED STATES PATENT AND TRADEMARK OFFICE

COMMISSIONER FOR PATENTS
UNITED STATES PATENT AND TRADEMARK OFFICE
P.O. BOX 1450
ALEXANDRIA, VA 22313-1450
www.uspto.gov

MAILED

OCT 18 2011

DIRECTOR OFFICE
TECHNOLOGY CENTER 2400

Myers Andras Sherman & Zarrabian LLP
(Samsung R&D Center)
1411 5th Street, Suite 306
Santa Monica CA 90401

In re Application of: Chiu Ngo et al.
Application No. 13/095775
Filed: April 27, 2011
Docket No. **SAM2B.P.e159**
Title: **METHOD AND SYSTEM FOR COMMUNICATION OF STEREOSCOPIC THREE DIMENSIONAL VIDEO INFORMATION**

DECISION ON PETITION FOR EXPUNGING INFORMATION UNDER UNDER 37 CFR § 1.59

This is a decision on the petition under 37 CFR § 1.59(b), filed on August 09, 2011, to expunge information from the above identified application.

The petition is **DISMISSED**.

Petitioner requests that a document entitled "High-Definition Multimedia Interface Specification Version 1.4", HDMI Licensing, LLC, 5 June 2009, pp. i-ii, 137, 143-145, and 184-197, United States, filed August 9, 2011, be expunged from the record.

Petitioner states either: (A) that the information contains trade secret material, proprietary material and/or material that is subject to a protective order which has not been made public; or (B) that the information submitted was unintentionally submitted and the failure to obtain its return would cause irreparable harm to the party who submitted the information or to the party in interest on whose behalf the information was submitted, and the information has not otherwise been made public. The petition fee set forth in 37 CFR 1.17(g) has been paid.

During prosecution on the merits, the examiner will determine whether or not the identified document is considered to be "material." If the information is not considered by the examiner to be material, the information will be removed from the official file.

The petition is premature because the application has not been allowed or abandoned. Accordingly, it is not appropriate to make a final determination of whether or not the

material requested to be expunged is "material," with "materiality" being defined as any information which the examiner considers as being important to a determination of patentability of the claims. Thus, the petition to expunge must be dismissed at this time.

During prosecution on the merits, the examiner will determine whether or not the information submitted on August 9, 2011 is considered to be "material." Once prosecution on the merits is closed, applicant may re-submit a petition to expunge the information. No further fee is required for such a second submission of a petition under 37 CFR § 1.59 to expunge information. If the information is not considered by the examiner to be material, the information will be removed from the official file.

Any inquiry regarding this decision should be directed to the undersigned whose telephone number is (571) 272-7294.

/Christopher Grant/

Christopher Grant
Quality Assurance Specialist
Technology Center 2400
Network, Multiplexing, Cable and Security

UNITED STATES PATENT AND TRADEMARK OFFICE

UNITED STATES DEPARTMENT OF COMMERCE
United States Patent and Trademark Office
Address: COMMISSIONER FOR PATENTS
P.O. Box 1450
Alexandria, Virginia 22313-1450
www.uspto.gov

APPLICATION NO.	FILING DATE	FIRST NAMED INVENTOR	ATTORNEY DOCKET NO.	CONFIRMATION NO.
13/095,919		Shigeru KIMURA	P1950US01	3530

89453 7590 05/11/2011
Ditthavong Mori & Steiner, P.C.
918 Prince Street
Alexandria, VA 22314

EXAMINER	
ART UNIT	PAPER NUMBER
2611	

NOTIFICATION DATE	DELIVERY MODE
05/11/2011	ELECTRONIC

Please find below and/or attached an Office communication concerning this application or proceeding.

The time period for reply, if any, is set in the attached communication.

Notice of the Office communication was sent electronically on above-indicated "Notification Date" to the following e-mail address(es):

osakadocket@dcpatent.com

UNITED STATES PATENT AND TRADEMARK OFFICE

Commissioner for Patents
United States Patent and Trademark Office
P.O. Box 1450
Alexandria, VA 22313-1450
www.uspto.gov

Ditthavong Mori & Steiner, P.C.
918 Prince Street
Alexandria VA 22314

In re Application of	:	
KIMURA, SHIGERU	:	DECISION ON REQUEST TO
Application No. 13/095,919	:	PARTICIPATE IN PATENT
Filed: April 28, 2001	:	PROSECUTION HIGHWAY
Attorney Docket No. **P1950US01**	:	PROGRAM AND PETITION
	:	TO MAKE SPECIAL UNDER
	:	37 CFR 1.102(a)

This is a decision on the request to participate in the Patent Prosecution Highway (PPH) program and the petition under 37 CFR 1.102(a), filed April 28, 2011 to make the above-identified application special.

The request and petition are **GRANTED**.

A grantable request to participate in the PPH program and petition to make special require:

(1) The U.S. application must validly claim priority under 35 U.S.C. 119(a) to one or more applications filed in the JPO;
(2) Applicant must submit a copy of the allowable/patentable claim(s) from the JPO application(s) along with an English translation thereof and a statement that the English translation is accurate;
(3) All the claims in the U.S. application must sufficiently correspond or be amended to sufficiently correspond to the allowable/patentable claim(s) in the JPO application(s);
(4) Examination of the U.S. application has not begun;
(5) Applicant must submit a copy of all the office actions from each of the JPO application(s) containing the allowable/patentable claim(s) along with an English translation thereof and a statement that the English translation is accurate; and
(6) Applicant must submit an IDS listing the documents cited by the JPO examiner in the JPO office action along with copies of documents except U.S. patents or U.S. patent application publications.

The request to participate in the PPH program and petition comply with the above requirements. Accordingly, the above-identified application has been accorded "special" status.

Telephone inquiries concerning this decision should be directed to Kenneth Wieder at 571-272-2986.

All other inquiries concerning the examination or status of the application should be directed to Patent Application Information Retrieval (PAIR) system.

The application is undergoing pre-examination processing. Once it is released for examination, the application will be forwarded to the examiner for action on the merits commensurate with this decision.

/Kenneth A. Wieder/

Kenneth Wieder
Quality Assurance Specialist
Technology Center 2600
Communications

IN THE UNITED STATES PATENT AND TRADEMARK OFFICE

First Named Inventor: Ravisekhar Nadimpalli RAJU)
Confirmation No.: 3692)
)
Serial No.: 13/096,005)
)
Filing Date: 04-28-2011)
)
Atty Docket No.: 248404-1)

Commissioner for Patents
P.O. Box 1450
Alexandria, VA 22313-1450

Statement Concerning the Basis for the Special Status

SIR:

Applicant respectfully submits that Special Status is sought on the basis that the present invention materially contributes to the development of renewable energy resources or energy conservation.

The undersigned attorney may be contacted at the number below to facilitate the resolution of any matters. Please charge any fees that are incurred in connection with this Statement to deposit account no. 09-0470.

Respectfully submitted,

General Electric Company

By : /Allison W Mages/
Allison Weiner Mages
Reg. No. 57,275

Dated: July 22, 2011

GE Global Patent Operation
2 Corporate Drive, Suite 648
Shelton, CT 06484
203-944-6755

Doc Code: PET.GREEN
Document Description: Petition for Green Tech Pilot

PTO/SB/420 (03-11)

PETITION TO MAKE SPECIAL UNDER THE GREEN TECHNOLOGY PILOT PROGRAM

Attorney Docket Number: 248404-1	Application Number (if known): 13/096,005	Filing date: 04-28-2011

First Named Inventor: Ravisekhar Nadimpalli RAJU

Title: ALTERNATING CURENT TO DIRECT CURRENT POWER CONVERSION

APPLICANT HEREBY REQUESTS TO PARTICIPATE IN THE GREEN TECHNOLOGY PILOT PROGRAM FOR THE ABOVE-IDENTIFIED APPLICATION. See Instruction Sheet on page 2.

This petition must be timely filed electronically using the USPTO electronic filing system, EFS-Web.

1. By filing this petition:

   Applicant is requesting early publication: Applicant hereby requests early publication under 37 CFR 1.219 and the publication fee set forth in 37 CFR 1.18(d) accompanies this request.

2. By filing this petition: applicant is agreeing to make an election without traverse in a telephonic interview and elect an invention that meets the eligibility requirements for the Green Technology Pilot Program, if the Office determines that the claims are not obviously directed to a single invention. See Instruction Sheet.

3. This request is accompanied by statements of special status for the eligibility requirement.

4. The application contains no more than three (3) independent claims and twenty (20) total claims.

5. The application does not contain any multiple dependent claims.

6. Other attachments: Statement Concerning the Basis for the Special Status

Signature /Allison W. Mages/	Date July 22, 2011
Name (Print/Typed) Allison W. Mages	Registration Number 57,275

Note: Signatures of all the inventors or assignees of record of the entire interest or their representative(s) are required in accordance with 37 CFR 1.33 and 11.18. Please see 37 CFR 1.4(d) for the form of the signature. If necessary, submit multiple forms for more than one signature, see below.*

☐ *Total of _____ forms are submitted.

If you need assistance in completing the form, call 1-800-PTO-9199 and select option 2.

UNITED STATES PATENT AND TRADEMARK OFFICE

UNITED STATES DEPARTMENT OF COMMERCE
United States Patent and Trademark Office
Address: COMMISSIONER FOR PATENTS
P.O. Box 1450
Alexandria, Virginia 22313-1450
www.uspto.gov

APPLICATION NO.	FILING DATE	FIRST NAMED INVENTOR	ATTORNEY DOCKET NO.	CONFIRMATION NO.
13/096,005	04/28/2011	Ravisekhar Nadimpalli Raju	248404-1	3692

6147 7590 09/30/2011

GENERAL ELECTRIC COMPANY
GLOBAL RESEARCH
ONE RESEARCH CIRCLE
BLDG. K1-3A59
NISKAYUNA, NY 12309

EXAMINER	
ART UNIT	PAPER NUMBER
2838	

NOTIFICATION DATE	DELIVERY MODE
09/30/2011	ELECTRONIC

Please find below and/or attached an Office communication concerning this application or proceeding.

The time period for reply, if any, is set in the attached communication.

Notice of the Office communication was sent electronically on above-indicated "Notification Date" to the following e-mail address(es):

ldocket@crd.ge.com
wahld@ge.com
haeckl@ge.com

UNITED STATES PATENT AND TRADEMARK OFFICE

Commissioner for Patents
United States Patent and Trademark Office
P.O. Box 1450
Alexandria, VA 22313-1450
www.uspto.gov

GENERAL ELECTRIC COMPANY
GLOBAL RESEARCH
ONE RESEARCH CIRCLE
BLDG. K1-3A59
NISKAYUNA NY 12309

In re Application of	:	
RAJU et al.	:	DECISION ON PETITION
Application No. 13/096005	:	TO MAKE SPECIAL UNDER
Filed: April 28, 2011	:	THE GREEN TECHNOLOGY
Attorney Docket No. 248404-1	:	PILOT PROGRAM

This is a decision on the petition under 37 CFR 1.102, filed on July 22, 2011, to make the above-identified application special under the pilot program for applications pertaining to Green Technologies as set forth 74 Federal Register Notice 64666 (December 8, 2009) and amended by 75 Federal Register Notice 28554 (May 21, 2010) and 75 Federal Register Notice 69049 (November 10, 2010).

The petition is **DISMISSED**.

If reconsideration of this decision is desired, a petition for reconsideration must be filed within ONE (1) MONTH OR THIRTY (30) DAYS from the mail date of this decision, whichever is longer. No extension of this time limit can be granted under 37 CFR 1.136(a) or (b). The petition for reconsideration should include an exhaustive attempt to provide the lacking item(s) noted below, since, after a decision on the petition for reconsideration, no further reconsideration or review of the matter will be undertaken by the Director.

A grantable petition to make an application special under 37 CFR 1.102 and the pilot program as set forth in 74 FR 64666 must be directed to a nonprovisional application filed under 35 USC 111(a) or be a national stage entry under 35 USC 371, exclusive of any reissue applications and be filed prior to the date of the notice, December 8, 2009.

In order to qualify for special status, the following requirements must be met. 1) The application must have no more than 3 independent claims and no more than 20 total claims. 2) The application must not contain any multiple dependent claims. 3) The petition must state the basis for seeking special status, i.e., the claimed invention either: A) materially enhances the quality of the environment or B) materially contributes to: i) the discovery or development of renewable energy resources, ii) the more efficient utilization and conservation of energy resources, or iii) greenhouse gas emission reduction. 4) If the disclosure is not clear on its face that the claimed invention materially contributes under category (A) or (B), the petition must be accompanied by a statement by the applicant, assignee, or an attorney/agent registered to practice before the

Office explaining how the materiality standard is met. 5) A statement that applicant will agree to make an election without traverse in a telephonic interview if a restriction requirement is made by the examiner. 6) The petition to make special must be filed electronically. 7) The petition must be filed at least one day prior to the date that a first Office Action appears in the Patent Application Information Retrieval (PAIR) system. 8) The petition must be accompanied by a request for early publication in compliance with 37 CFR 1.219 and include the publication fee as set forth in 37 CFR 1.18(d).

The requirement for a fee for consideration of the petition to make special for applications pertaining to Green Technologies has been waived.

The petition lacks item 4.

In regard to item 4, applicant's statement pertaining to how the materiality standard is met does not satisfy the requirements for this pilot. The instant petition includes a statement identifying the basis for the special status as having claims which materially contributes to the development of renewable energy resources or energy conservation. The materiality standard does not permit an applicant to speculate as to how a hypothetical end-user might specially apply the claimed invention in a manner that could contribute to the development of renewable energy resources or energy conservation. Any argument that the claimed invention can be used for energy conservation or development of renewable energy would be considered speculative as to how a hypothetical end-user might specially apply to the claimed power conversion system. The claims are not directed to the energy conservation or renewable energy.

Any reconsideration of this decision should be submitted through the USPTO electronic filing system, EFS-Web, and selecting the document description of "Petition for Green Tech Pilot" on the EFS-Web screen.

Telephone inquiries concerning this decision should be directed to Colleen Dunn at 571-272-1170.

The application is being forwarded to the appropriate Technology Center Art Unit for action in its regular turn.

/Colleen Dunn/

Colleen Dunn
Quality Assurance Specialist
Technology Center 2800

IN THE UNITED STATES PATENT AND TRADEMARK OFFICE

First Named Inventor: Ravisekhar Nadimpalli RAJU	)
Confirmation No.: 3692	)
	)
Serial No.: 13/096,005	)
	)
Filing Date: 04-28-2011	)
	)
Atty Docket No.: 248404-1	)

Commissioner for Patents
P.O. Box 1450
Alexandria, VA 22313-1450

Request for Reconsideration

SIR:

This is responsive to the Decision on Petition, dated as mailed 30 September 2011, in the above-referenced application.

Applicant respectfully requests reconsideration of Applicant's Petition to Make Special on the basis that the present invention materially contributes to the development of renewable energy resources or the more efficient utilization and conservation of energy resources.

The Decision to Make Special Under the Green Technology Pilot Program (hereinafter "the Decision") alleges that any argument that the claimed invention can be used for energy conservation or development of renewable energy would be considered to be speculative as to how a hypothetical end-user might specially apply to the claimed power conversion system. The Decision further alleges that the claims are not directed to energy conservation or renewable energy. Applicant does not agree with the comments made in the Decision.

Applicant respectfully submits that embodiments of the present invention relate generally to alternating current to direct current (AC to DC) power conversion. (see at least paragraph [0002]).

AC to DC power conversion has wide ranging applications, but is often found serving as components of DC power supplies, such as wind and solar power supplies, and high-voltage direct current power transmission systems. The generation of energy by such power supplies depends heavily on cost effective, reliable, and efficient means of generating and converting energy to electrical energy that is suitable for delivery to, and use by, one or more electric loads.

AC to DC converters convert input AC power to output DC power. In one conventional approach to AC to DC power conversion, an AC to DC converter includes a diode rectifier with a pulse-width-modulated boost stage for converting the input AC voltage to an intermediate stiff DC voltage and for shaping the input AC current to have unity power factor. The intermediate stiff DC voltage is further processed by a transformer-isolated DC-DC converter with suitable gain to provide a DC output voltage to the load. This conventional approach often requires large filters and has poor efficiency due to multiple stages of power conversion and hard-switching of the semiconductor switches. (see at least paragraph [0003]).

In one embodiment, an alternating current to direct current (AC to DC) power conversion system is provided. The system includes a rectifier configured to convert an input AC voltage to an initial pulsating DC voltage. The system also includes an inverter configured to convert the initial pulsating DC voltage to a

converted AC voltage. The system further includes a plurality of transformers, each transformer comprising a primary winding paired to a secondary winding, wherein each of the primary windings is coupled in series with the other primary windings, wherein the series coupled primary windings are coupled to the inverter to receive respective portions of the converted AC voltage. The system also includes a plurality of bridges, each bridge electrically coupled to a respective secondary winding configured to receive a respective portion of a transformed AC voltage from the respective secondary winding, and coupled in parallel to the other bridges to provide a combined DC output voltage. (see at least paragraph [0005]). In an exemplary embodiment, the inverter operates at least partially in a duty cycle mode to provide the converted high frequency AC voltage. In a more specific embodiment, the inverter operates in a square wave mode. (see at least paragraph [0014]).

In specific embodiments, all or all except for one of the transformers decreases the voltage level of its respective portion of the converted high frequency AC voltage and are coupled with a resonant circuit to provide low switching losses in the inverter and to allow switching of the inverter and bridges under substantially zero voltage or zero current conditions. (see at least paragraph [0015]). The various embodiments of the AC-DC converter described herein provide a more efficient and less expensive AC-DC converter. When the AC-DC converter primarily employs a square wave mode of operation with resonant circuits for soft switching, reduced losses and increased efficiency result. Also, large and costly filters are not needed. (see at least paragraph

[0020]). The embodiments of the present invention promote cost effective, reliable, and efficient means of generating and converting energy to electrical energy that is suitable for delivery to, and use by, one or more electric loads. As such, embodiments of the present invention contribute to the development of renewable energy resources and/or the more efficient utilization and conservation of energy resources.

The undersigned attorney may be contacted at the number below to facilitate the resolution of any matters. Please charge any fees that are incurred in connection with this Statement to deposit account no. 09-0470.

Respectfully submitted,

General Electric Company

By : /Allison W Mages/
Allison Weiner Mages
Reg. No. 57,275

Dated: October 26, 2011

GE Global Patent Operation
2 Corporate Drive, Suite 648
Shelton, CT 06484
203-944-6730

UNITED STATES PATENT AND TRADEMARK OFFICE

UNITED STATES DEPARTMENT OF COMMERCE
United States Patent and Trademark Office
Address: COMMISSIONER FOR PATENTS
P.O. Box 1450
Alexandria, Virginia 22313-1450
www.uspto.gov

APPLICATION NO.	FILING DATE	FIRST NAMED INVENTOR	ATTORNEY DOCKET NO.	CONFIRMATION NO.
13/096,005	04/28/2011	Ravisekhar Nadimpalli Raju	248404-1	3692

6147 7590 11/17/2011

GENERAL ELECTRIC COMPANY
GLOBAL RESEARCH
ONE RESEARCH CIRCLE
BLDG. K1-3A59
NISKAYUNA, NY 12309

EXAMINER	
ART UNIT	PAPER NUMBER
2838	

NOTIFICATION DATE	DELIVERY MODE
11/17/2011	ELECTRONIC

Please find below and/or attached an Office communication concerning this application or proceeding.

The time period for reply, if any, is set in the attached communication.

Notice of the Office communication was sent electronically on above-indicated "Notification Date" to the following e-mail address(es):

ldocket@crd.ge.com
wahld@ge.com
haeckl@ge.com

UNITED STATES PATENT AND TRADEMARK OFFICE

Commissioner for Patents
United States Patent and Trademark Office
P.O. Box 1450
Alexandria, VA 22313-1450
www.uspto.gov

GENERAL ELECTRIC COMPANY
GLOBAL RESEARCH
ONE RESEARCH CIRCLE
BLDG. K1-3A59
NISKAYUNA NY 12309

NOV 17 2011

In re Application of	:	
Raju et al.	:	DECISION ON PETITION
Application No. 13/096,005	:	TO MAKE SPECIAL UNDER
Filed: 4/28/2011	:	THE GREEN TECHNOLOGY
Attorney Docket No. **248404-1**	:	PILOT PROGRAM

This is a decision on the request for reconsideration filed 10/25/2011, to make the above-identified application special under the pilot program for applications pertaining to Green Technologies as set forth in 74 Federal Register Notice 64666 (December 8, 2009) and amended by 75 Federal Register Notice 28554 (May 21, 2010) and 75 Federal Register Notice 69049 (November 10, 2010).

The petition is **GRANTED**.

A grantable petition to make an application special under 37 CFR 1.102 and the pilot program as set forth in 74 FR 64666 must be directed to a nonprovisional application filed under 35 USC 111(a) or be a national stage entry under 35 USC 371, exclusive of any reissue applications.

In order to qualify for special status, the following requirements must be met. 1) The application must have no more than 3 independent claims and no more than 20 total claims. 2) The application must not contain any multiple dependent claims. 3) The petition must state the basis for seeking special status, i.e., the claimed invention either: A) materially enhances the quality of the environment or B) materially contributes to: i) the discovery or development of renewable energy resources, ii) the more efficient utilization and conservation of energy resources, or iii) greenhouse gas emission reduction. 4) If the disclosure is not clear on its face that the claimed invention materially contributes under category (A) or (B), the petition must be accompanied by a statement by the applicant, assignee, or an attorney/agent registered to practice before the Office explaining how the materiality standard is met. 5) A statement that applicant will agree to make an election without traverse in a telephonic interview if a restriction requirement is made by the examiner. 6) The petition to make special must be filed electronically. 7) The petition must be filed at least one day prior to the date that a first Office Action appears in the Patent

Application Information Retrieval (PAIR) system. 8) The petition must be accompanied by a request for early publication in compliance with 37 CFR 1.219 and include the publication fee as set forth in 37 CFR 1.18(d).

The requirement for a fee for consideration of the petition to make special for applications pertaining to Green Technologies has been waived.

The instant petition complies with items 1 – 8 above. Accordingly, the above-identified application has been accorded "special" status.

Telephone inquires concerning this decision should be directed to Tom Dunn at 571-272-1171.

The application is being forwarded to the Technology Center Art Unit 2838 for action on the merits commensurate with this decision.

/Tom Dunn/

Tom Dunn
Quality Assurance Specialist
Technology Center 1700

Doc Code: PET.AUTO Document Description: Petition automatically granted by EFS-Web	PTO/SB/64a U.S. Patent and Trademark Office Department of Commerce

Electronic Petition Request	**PETITION FOR REVIVAL OF AN APPLICATION FOR PATENT ABANDONED FOR FAILURE TO NOTIFY THE OFFICE OF A FOREIGN OR INTERNATIONAL FILING UNDER 37 CFR 1.137(f)**
Application Number	13096162
Filing Date	28-Apr-2011
First Named Inventor	Michael Schuster
Art Unit	3751
Examiner Name	
Attorney Docket Number	171901-1210
Title	OFFSETTING DUAL FLUSH ADAPTER

The above-identified application became abandoned pursuant to 35 U.S.C. 122(b)(2)(B)(iii) for failure to timely notify the Office of the filing of an application in a foreign country or under a multinational treaty that requires publication of applications eighteen months after filing. The date of abandonment is the day after the expiration date of the forty-five (45) day period set in 35 U.S.C. 122(b)(2)(B)(iii).

PURSUANT TO 37 CFR 1.137(f), APPLICANT HEREBY PETITIONS FOR REVIVAL OF THIS APPLICATION UNDER 37 CFR 1.137(b).

A grantable petition requires the following items:
(1) Petition fee;
(2) Reply;
(3) Statement that the entire delay was unintentional.

Petition fee
The petition fee under 37CFR 1.17(m) is attached.

☐ Applicant claims SMALL ENTITY status. See 37 CFR 1.27.

☐ Applicant is no longer claiming SMALL ENTITY status. See 37 CFR 1.27(g)(2).

☒ Applicant(s) status remains as SMALL ENTITY.

☐ Applicant(s) status remains as other than SMALL ENTITY.

Notice of Foreign or International Filing (35 U.S.C. 122(b)(2)(B)(iii) and 37 CFR 1.213(c))

☒ Subsequent to the filing of the above-identified application, an application was filed in another country, or under a multinational international treaty (e.g., filed under the Patent Cooperation Treaty), that requries publication of applications eighteen months after the filing. The filing date of the subsequently filed foreign or international application is 04-28-2011

☒ The non-publication request has been filed on 28-Apr-2011

☒ STATEMENT: The entire delay in filing the required notice of a foreign or international filing from the due date for the required notice until the filing of a grantable petition under 37 CFR 1.137(b) was unintentional.

THIS PORTION MUST BE COMPLETED BY THE SIGNATORY OR SIGNATORIES

I certify, in accordance with 37 CFR 1.4(d)(4) that I am:

◉ An attorney or agent registered to practice before the Patent and Trademark Office who has been given power of attorney in this application.

○ An attorney or agent registered to practice before the Patent and Trademark Office, acting in a representative capacity.

○ A sole inventor

○ A joint inventor; I certify that I am authorized to sign this submission on behalf of all of the inventors.

○ A joint inventor; all of whom are signing this e-petition.

○ The assignee of record of the entire interest that has properly made itself of record pursuant to 37 CFR 3.71.

Signature	/Michael J. D'Aurelio/
Name	Michael J. D'Aurelio
Registration Number	40977

UNITED STATES PATENT AND TRADEMARK OFFICE

UNITED STATES DEPARTMENT OF COMMERCE
United States Patent and Trademark Office
Address: COMMISSIONER FOR PATENTS
P.O. Box 1450
Alexandria, Virginia 22313-1450
www.uspto.gov

APPLICATION NO.	FILING DATE	FIRST NAMED INVENTOR	ATTORNEY DOCKET NO.	CONFIRMATION NO.
13/096,227	04/28/2011	Alexey A. Polyakov	031185-00033	4106

38485 7590 05/26/2011

ARENT FOX LLP
1675 BROADWAY
NEW YORK, NY 10019

EXAMINER	
ART UNIT	PAPER NUMBER
2431	

NOTIFICATION DATE	DELIVERY MODE
05/26/2011	ELECTRONIC

Please find below and/or attached an Office communication concerning this application or proceeding.

The time period for reply, if any, is set in the attached communication.

Notice of the Office communication was sent electronically on above-indicated "Notification Date" to the following e-mail address(es):

NYIPDocket@arentfox.com
Patent_Mail@arentfox.com

UNITED STATES PATENT AND TRADEMARK OFFICE

COMMISSIONER FOR PATENTS
UNITED STATES PATENT AND TRADEMARK OFFICE
WASHINGTON, DC 20231
www.uspto.gov

Michael Fainberg
Arent Fox LLP
1675 Broadway
New York, NY 10019

In re Application of:
Zaitsev
Serial No.: 13/096227
Filed: April 28, 2011
Docket: 031185-00033
For: **Systems and Method for Detection of Complex Malware**

DECISION ON PETITION TO MAKE SPECIAL FOR NEW APPLICATION UNDER 37 C.F.R. § 1.102 & M.P.E.P. § 708.02

This is a decision on the petition filed on April 28, 2011 to make the above-identified application special for accelerated examination procedure under 37 C.F.R. § 1.102(d).

The petition to make the application special is **DISMISSED**.

REGULATION AND PRACTICE

A grantable petition to make special under 37 C.F.R. § 1.102(d) and pursuant to the "Change to Practice for Petitions in Patent Applications to Make Special and for Accelerated Examination" published in the Federal Register on June 26, 2006 (71 Fed. Reg. 36323), must satisfy the following conditions:

I. Conditions Regarding the Application:

1. the application must be a non-reissue utility or design application filed under 37 CFR 1.111(a);

2. the application, the petition and the required fees must be filed electronically using the USPTO's electronic filing system (EFS), or EFS-web; if not filed electronically, a statement asserting that EFS and EFS-web were not available during the normal business hours.

3. at the time of filing, the application must be complete under 37 CFR 1.51 and in condition for examination;

4. the application must contain three or fewer independent claims and twenty or fewer total claims and the claims must be directed to a single invention.

II. Conditions Regarding the Petition:

The petition must:

1. be filed with the application;

2. include a statement that applicant agrees not to separately argue the patentability of any independent claim during any appeal in the application;

3. include a statement that applicant agrees to make an election without traverse in a telephone interview.

4. include a statement that applicant agrees to conduct such an interview when requested by the examiner.

5. include a statement, made based on a good faith belief, that a preexamination search in compliance with the following requirements, was conducted, including an identification of the filed of search by United States class and subclass, where applicable, and for database searches, the search logic or chemical structure or sequence used as a query, the name of the file(s) searched and the database service, and the date of the search.

The preexamination search must:

5.1 involve U.S. patents and patent application publications, foreign patent documents, and non-patent literature, unless the applicant can justify with reasonable certainty that no references more pertinent than those already identified are likely to be found in the eliminated sources and includes such a justification with this statement;

5.2. be directed to the claimed invention and encompass all of the features of the claims, giving the claims the broadest reasonable interpretation;

5.3. encompass the disclosed features that may be claimed.

6. must provide in support of the petition an accelerated examination support document.

An accelerated examination support document must include:

6.1. an information disclosure statement (IDS) in compliance with 37 CFR 1.98 citing each reference deemed most closely related to the subject matter of each of the claims;

6.2. an identification of all the limitations in the claims that are disclosed by the reference specifying where the limitation is disclosed in the cited reference;

6.3. a detailed explanation of how each of the claims are patentable over the references cited with particularity required by 37 CFR 1.111(b) and (c);

6.4. a concise statement of the utility of the invention as defined in each of the independent claims (unless the application is a design application);

6.5. a showing of where each limitation of the claims finds support under 35 USC 112, first paragraph, in the written description of the specification. If applicable, the showing must also identify: (1) each means- (or step) plus-function claim element that invokes consideration under 35 UDC 112, sixth paragraph; and (2) the structure, material, or acts in the specification that corresponds to each means- (or step) plus-function claim element that invokes consideration under 35 UDC 112, sixth paragraph; if the application claims the benefit of one or more applications under title 35, United States Code, the showing must also include where each limitation of the claims finds support under 35 USC 112, first paragraph, in each such application in which such supports exists;

6.6. an identification of any cited references that may be disqualified under 35 USC 103(c).

REVIEW OF FACTS

The conditions I 1-4, II 1-4 and II 5.1, 5.3, II 6.1-6.6 above are considered to have been met. However, the petition fails to comply with condition II 5.2 above. Therefore, the petition fails to meet the required conditions to be accorded special status under the accelerated examination procedure.

Regarding the requirement of MPEP § 708.02(a)(I.)(H)[1] and items II.5.2 above, the preexamination search does not encompass all of the features of the claims, and does not appear to have given the claims the broadest reasonable interpretation.

Specifically, the text search strategy should be modified to include a reasonable number of synonyms for process or thread and should be modified to covered the claimed merging of events. See below for popular synonyms.

process thread program code software macro script applet executable application logic object

merg$3 group$3 combin$ associat$4 correspond$ correlat$ collect$4

Finally, based upon the claimed subject matter of the instant application, a search in the following class and subclasses is recommended in order to provide full coverage of where the most pertinent references are most likely to be found: **Class 707 Data Processing:Database and File Management or Data Structures Subclass 794** (Malicious software) for subject matter related to malware detection using merged and individual event data.

This additional search area was confirmed with an examiner in the pertinent art area.

Petitioner should review all claim limitations, especially those asserted as patentable distinctions from the cited references to ensure that the search covers these concepts, and update the search and/or provide any clarifications if deemed necessary.

DECISION

For the above-stated reasons, the petition is **dismissed**. The application will therefore be taken up by the examiner for action in its regular turn.

Petitioner is given a single opportunity to perfect the petition. Any request for reconsideration of this decision must be submitted within 1 (one) month or 30 (thirty) days, whichever is longer, (no extension of time under 37 CFR 1.136(a)) from the date of this decision in order to be considered timely. Any request for reconsideration must address the deficiencies indicated above.

Petitioner is reminded that, upon granting of the special status of the application on request for reconsideration, the application will be processed expeditiously. However, due to the dismissal of the instant petition, examination may not be completed within twelve months of the filing date of the application.

Any inquiry regarding this decision should be directed to Tod Swann, Quality Assurance Specialist, at (571) 272-3612. A second point of Contact is Kim Huynh at (571)-272-4147.

Tod R Swann, WQAS 2430
Technology Center 2400
Networking, Multiplex, Cable and Information Security

UNITED STATES PATENT AND TRADEMARK OFFICE

UNITED STATES DEPARTMENT OF COMMERCE
United States Patent and Trademark Office
Address: COMMISSIONER FOR PATENTS
P.O. Box 1450
Alexandria, Virginia 22313-1450
www.uspto.gov

APPLICATION NO.	FILING DATE	FIRST NAMED INVENTOR	ATTORNEY DOCKET NO.	CONFIRMATION NO.
13/096,227	04/28/2011	Alexey A. Polyakov	031185-00033	4106

38485 7590 07/01/2011

ARENT FOX LLP
1675 BROADWAY
NEW YORK, NY 10019

EXAMINER	
CERVETTI, DAVID GARCIA	
ART UNIT	**PAPER NUMBER**
2436	

NOTIFICATION DATE	DELIVERY MODE
07/01/2011	ELECTRONIC

Please find below and/or attached an Office communication concerning this application or proceeding.

The time period for reply, if any, is set in the attached communication.

Notice of the Office communication was sent electronically on above-indicated "Notification Date" to the following e-mail address(es):

NYIPDocket@arentfox.com
Patent_Mail@arentfox.com

UNITED STATES PATENT AND TRADEMARK OFFICE

COMMISSIONER FOR PATENTS
UNITED STATES PATENT AND TRADEMARK OFFICE
WASHINGTON, DC 20231
www.uspto.gov

Michael Fainberg
Arent Fox LLP
1675 Broadway
New York, NY 10019

In re Application of:
Zaitsev
Serial No.: 13/096227
Filed: April 28, 2011
Docket: 031185-00033
For: **Systems and Method for Detection of Complex Malware**

DECISION ON PETITION TO MAKE SPECIAL FOR NEW APPLICATION UNDER 37 C.F.R. § 1.102 & M.P.E.P. § 708.02

This is a decision on the petition re-filed on June 24, 2011 to make the above-identified application special for accelerated examination procedure under 37 C.F.R. § 1.102(d). The original petition was filed on April 28, 2011 and dismissed on May 25, 2011.

The petition to make the application special is **GRANTED** as the papers filed on June 24, 2011 including the Pre-Examination Search Document now meet the requirements of 37 C.F.R. § 1.102(d) and MPEP 708.02(a)(I) as the search is now encompasses all claim scope.

The prosecution of the instant application will be conducted expeditiously according to the following guidelines.

The application will be docketed to an examiner and taken up for action within two weeks of the date of this decision.

1. Restriction Practice:
If the examiner determines that the claims are not directed to a single invention, a telephone request to elect one single invention will be made pursuant to MPEP 812.01. As a prerequisite to the grant of this petition, the applicant has agreed to make an oral election, by telephone, without traverse. If the applicant refuses to make an election without traverse, or the examiner cannot reach the applicant after a reasonable effort, the examiner will treat the first claimed invention (invention defined by claim 1) as having being constructively elected without traverse for examination.

2. Office action:
If it is determined that, after appropriate consultation, there is a potential rejection or any other issue to be addressed, the examiner will telephone the

applicant and arrange an interview to discuss and resolve the issue. An Office action, other than a Notice of Allowance and Fee(s) Due (Notice of Allowance), will not be issued unless either: 1) an interview was conducted but did not result in agreed to action that places the application in condition for allowance, or, 2) a determination is made that an interview would be unlikely to result in the application being placed in condition for allowance, and 3) an internal conference has been held to review any rejection of any claim.

3. Time for Reply:
An Office action other than a Notice of Allowance or a final Office action will set a shortened statutory period of one month or thirty days, whichever is longer, for reply with no extension of time available under 37 CFR 1.136(a). Failure to timely file a reply within this non-extendible period for reply will result in the abandonment of the application.

4. Reply by Applicant:
A timely reply to an Office action other than the Notice of Allowance must be submitted electronically via EFS or EFS-web and limited to addressing the rejections, objections and requirement made. Any amendment that attempts to: 1) add claims which would result in more than three pending independent claims or more than twenty pending total claims; 2) present claims not encompassed by the pre-examination search or an updated accelerated examination support document; or 3) present claims that are directed a non-elected invention or an invention other than that previously claimed and examined in the application, will be treated as not fully responsive and will not be entered.

For any amendment to the claims (including any new claim) that is not encompassed by the accelerated examination support document, applicant must provide an updated accelerated examination support document that encompasses the amended or new claims at the time of filing of the amendment.

To proceed expeditiously with the examination, it is recommended that a reply with amendments made to any claim or with any new claim being added be accompanied by an updated accelerated examination support document or a statement explaining how the amended or new claim is supported by the original accelerated examination support document.

5. Information Disclosure Statement (IDS):
Any IDS filed during prosecution must be submitted electronically via EFS or EFS-web, accompanied by an updated accelerated examination support document, and be in compliance with 37 CFR 1.97 and 1.98.

6. Post-Allowance Processing:
To expedite processing of the allowed application into a patent, the applicant must: 1) pay the required fees within one month of the date of the Notice of Allowance, and 2) not file any post allowance papers not required by the Office. In no event may the issue fee be paid and accepted later than three months from the date of the Notice of Allowance.

7. After-Final and Appeal Procedures:
To expedite prosecution, after receiving the final Office action, applicant must: 1) promptly file a notice of appeal, an appeal brief and appeal fees; and 2) not request a pre-appeal brief conference.

Any amendment, affidavit or other evidence filed after final Office action must comply with applicable rules and the requirements outlined in numbered paragraphs 5 and 6 above.

On appeal, the application will proceed according to normal appeal procedures. After appeal, the application will again be treated special.

8. Proceedings Outside the Normal Examination Process:
If the application becomes involved in a proceeding that is outside the normal examination process (e.g., a secrecy order, national security review, interference proceeding, petitions under 37 CFR 1.181, 182 or 183), the application will be treated special before and after such proceeding.

9. Final Disposition:
The twelve month goal of this accelerated examination procedure ends with a final disposition. The mailing of a final Office action, a Notice of Allowance, the filing of a Notice of Appeal, or the filing of a Request for Continued Examination (RCE) is the final disposition.

If, during prosecution, a paper is not filed electronically using EFS-web, a reply is filed but is not fully responsive, the application is involved in an appeal, or a proceeding outside normal examination process, the application will still be examined expeditiously, however, the final disposition may occur more than twelve months from the filing of the application.

Any inquiry regarding this decision should be directed to Tod Swann, Quality Assurance Specialist, at (571) 272-3612. A second point of Contact is Kim Huynh at (571)-272-4147.

Tod R Swann, WQAS 2430
Technology Center 2400

UNITED STATES PATENT AND TRADEMARK OFFICE

Commissioner for Patents
United States Patent and Trademark Office
P.O. Box 1450
Alexandria, VA 22313-1450
www.uspto.gov

HAYNES AND BOONE, LLP
IP SECTION
2323 VICTORY AVENUE
SUITE 700
DALLAS, TX 75219

MAILED

SEP 20 2011

OFFICE OF PETITIONS

In re Application of :
Dejan Radosavljevic et al. :
Application No. 13/096,469 : DECISION ACCORDING STATUS
Filed: April 28, 2011 : UNDER 37 CFR 1.47(a)
Attorney Docket No. 70052.404 (previously FLIR-051) :

This is in response to the petition filed September 14, 2011 under 37 CFR 1.47(a).

The petition under 37 CFR 1.47(a) is **GRANTED**.

The above-identified application was filed on April 28, 2011 without an executed declaration. Accordingly, a Notice to File Missing Parts was mailed May 16, 2011 requiring, *inter alia*, an executed oath or declaration and a surcharge for its late filing.

In response, an oath or declaration executed only by joint inventor Radosavljevic, a two month extension of time request and the instant petition, seeking status under 37 CFR 1.47, was filed. Petitioners claim that joint inventor Mavrides refuses to execute the declaration.

A grantable petition under 37 CFR 1.47(a) requires: (1) proof that the non-signing inventor cannot be reached or refuses to sign the oath or declaration after having been presented with the application papers (specification, claims and drawings); (2) an acceptable oath or declaration in compliance with 35 U.S.C. §§ 115 and 116; (3) the petition fee; and (4) a statement of the last known address of the non-signing inventor.

The petition bears proof that the application papers were forwarded to and received by joint inventor Mavrides, he has not returned an executed copy of the oath or declaration and has expressly refused to cooperate with the filing of the instant application.

The above-identified application and papers have been reviewed and found in compliance with 37 CFR 1.47(a). In view thereof, this application is hereby accorded Rule 1.47(a) status.

Thus, as provided in Rule 1.47c, this Office will forward notice of this application's filing to the non-signing inventor at the address given in the petition. Notice of the filing of this application will also be published in the Official Gazette.

The late filing surcharge, petition fee and the extension of time fee have been charged to the credit card provided and have been applied to the finance records.

This matter is being referred to the Office of Patent Application Processing for further pre-examination processing.

Telephone inquiries concerning this matter may be directed to the undersigned Petitions Attorney at (571) 272-3212.

Patricia Faison-Ball

Patricia Faison-Ball
Senior Petitions Attorney
Office of Petitions

Doc Code: PPH.PCT.652
Document Description: Petition to make special under PCT-Patent Pros Hwy

PTO/SB/20PCT-KR (06-10)
Approved for use through 01/31/2012. OMB 0651-0058
U.S. Patent and Trademark Office; U. S. DEPARTMENT OF COMMERCE
Under the Paperwork Reduction Act of 1995, no persons are required to respond to a collection of information unless it displays a valid OMB control number.

REQUEST FOR PARTICIPATION IN THE PATENT COOPERATION TREATY - PATENT PROSECUTION HIGHWAY (PCT-PPH) PILOT PROGRAM BETWEEN THE KOREAN INTELLECTUAL PROPERTY OFFICE (KIPO) AND THE USPTO

Application No:	13/096,519	Filing date:	April 28, 2011
First Named Inventor:	Steven Lane		
Title of the Invention:	Case Configured to Removably Couple to a Portable Electrical Device and Method of Providing and Use Thereof		

THIS REQUEST FOR PARTICIPATION IN THE PCT-PPH PILOT PROGRAM ALONG WITH THE REQUIRED DOCUMENTS MUST BE SUBMITTED VIA EFS-WEB. INFORMATION REGARDING EFS-WEB IS AVAILABLE AT HTTP://WWW.USPTO.GOV/EBC/EFS_HELP.HTML

APPLICANT HEREBY REQUESTS PARTICIPATION IN THE PCT-PPH PROGRAM AND PETITIONS TO MAKE THE ABOVE-IDENTIFIED APPLICATION SPECIAL UNDER THE PCT-PPH PROGRAM.

The above-identified application is (1) a national stage entry of the corresponding PCT application, or (2) a national stage entry of another PCT application which claims priority to the corresponding PCT application, or (3) a national application that claims domestic/ foreign priority to the corresponding PCT application, or (4) a national application which forms the basis for the priority claim in the corresponding PCT application, or (5) a continuing application of a U.S. application that satisfies one of (1) to (4) above, or (6) a U.S. application that claims domestic benefit to a U.S. provisional application which forms the basis for the priority claim in the corresponding PCT application.

The corresponding PCT application number(s) is/are: PCT/US2011/034293

The international filing date of the corresponding PCT application(s) is/are: April 28, 2011

I. List of Required Documents:

a. **A copy of the latest international work product (WO/ISA, WO/IPEA, or IPER) in the above–identified corresponding PCT application(s)**

☐ Is attached.

☑ Is not attached because the document is already in the U.S. application.

b. **A copy of all claims which were indicated as having novelty, inventive step and industrial applicability in the above-identified corresponding PCT application(s).**

☑ Is attached.

☐ Is not attached because the document is already in the U.S. application.

c. **English translations of the documents in a. and b. above are attached (if the documents are not in the English language). A statement that the English translation is accurate is attached for the document in b. above.**

This collection of information is required by 35 U.S.C. 119, 37 CFR 1.55, and 37 CFR 1.102(d). The information is required to obtain or retain a benefit by the public, which is to file (and by the USPTO to process) an application. Confidentiality is governed by 35 U.S.C. 122 and 37 CFR 1.11 and 1.14. This collection is estimated to take 2 hours to complete, including gathering, preparing, and submitting the completed application form to the USPTO. Time will vary depending upon the individual case. Any comments on the amount of time you require to complete this form and/or suggestions for reducing this burden should be sent to the Chief Information Officer, U.S. Patent and Trademark Office, U.S. Department of Commerce, P.O. Box 1450, Alexandria, VA 22313-1450. DO NOT SEND FEES OR COMPLETED FORMS TO THIS ADDRESS.

PTO/SB/20PCT-KR (06-10)
Approved for use through 01/31/2012. OMB 0651-0058
U.S.Patent and Trademark Office; U.S. DEPARTMENT OF COMMERCE
Under the Paperwork Reduction Act of 1995, no persons are required to respond to a collection of information unless it displays a valid OMB control number.

REQUEST FOR PARTICIPATION IN THE PCT-PPH PILOT PROGRAM BETWEEN THE KIPO AND THE USPTO

(continued)

Application No.:	13/096,519
First Named Inventor:	Steven Lane

d. **(1) An information disclosure statement listing the documents cited in the international work products (ISR, WO/ISA, WO/IPEA, IPER) of the corresponding PCT application.**

☐ Is attached

☑ Has already been filed in the above-identified U.S. application on December 16, 2011

(2) Copies of all documents (except) for U.S. patents or U.S. patent application publications)

☐ Are attached.

☑ Have already been filed in the above-identified U.S. application on December 16, 2011

II. Claims Correspondence Table:

Claims in US Application	Patentable Claims in the corresponding PCT Application	Explanation regarding the correspondence
1-20	1-20	Identical.

III. All the claims in the US application sufficiently correspond to the patentable claims in the corresponding PCT application.

Signature /Walter P. Opaska/	Date December 16, 2011
Name (Print/Typed) Walter P. Opaska	Registration Number 54,349

Privacy Act Statement

The **Privacy Act of 1974 (P.L. 93-579)** requires that you be given certain information in connection with your submission of the attached form related to a patent application or patent. Accordingly, pursuant to the requirements of the Act, please be advised that: (1) the general authority for the collection of this information is 35 U.S.C. 2(b)(2); (2) furnishing of the information solicited is voluntary; and (3) the principal purpose for which the information is used by the U.S. Patent and Trademark Office is to process and/or examine your submission related to a patent application or patent. If you do not furnish the requested information, the U.S. Patent and Trademark Office may not be able to process and/or examine your submission, which may result in termination of proceedings or abandonment of the application or expiration of the patent.

The information provided by you in this form will be subject to the following routine uses:

1. The information on this form will be treated confidentially to the extent allowed under the Freedom of Information Act (5 U.S.C. 552) and the Privacy Act (5 U.S.C 552a). Records from this system of records may be disclosed to the Department of Justice to determine whether disclosure of these records is required by the Freedom of Information Act.
2. A record from this system of records may be disclosed, as a routine use, in the course of presenting evidence to a court, magistrate, or administrative tribunal, including disclosures to opposing counsel in the course of settlement negotiations.
3. A record in this system of records may be disclosed, as a routine use, to a Member of Congress submitting a request involving an individual, to whom the record pertains, when the individual has requested assistance from the Member with respect to the subject matter of the record.
4. A record in this system of records may be disclosed, as a routine use, to a contractor of the Agency having need for the information in order to perform a contract. Recipients of information shall be required to comply with the requirements of the Privacy Act of 1974, as amended, pursuant to 5 U.S.C. 552a(m).
5. A record related to an International Application filed under the Patent Cooperation Treaty in this system of records may be disclosed, as a routine use, to the International Bureau of the World Intellectual Property Organization, pursuant to the Patent Cooperation Treaty.
6. A record in this system of records may be disclosed, as a routine use, to another federal agency for purposes of National Security review (35 U.S.C. 181) and for review pursuant to the Atomic Energy Act (42 U.S.C. 218(c)).
7. A record from this system of records may be disclosed, as a routine use, to the Administrator, General Services, or his/her designee, during an inspection of records conducted by GSA as part of that agency's responsibility to recommend improvements in records management practices and programs, under authority of 44 U.S.C. 2904 and 2906. Such disclosure shall be made in accordance with the GSA regulations governing inspection of records for this purpose, and any other relevant (*i.e.*, GSA or Commerce) directive. Such disclosure shall not be used to make determinations about individuals.
8. A record from this system of records may be disclosed, as a routine use, to the public after either publication of the application pursuant to 35 U.S.C. 122(b) or issuance of a patent pursuant to 35 U.S.C. 151. Further, a record may be disclosed, subject to the limitations of 37 CFR 1.14, as a routine use, to the public if the record was filed in an application which became abandoned or in which the proceedings were terminated and which application is referenced by either a published application, an application open to public inspection or an issued patent.
9. A record from this system of records may be disclosed, as a routine use, to a Federal, State, or local law enforcement agency, if the USPTO becomes aware of a violation or potential violation of law or regulation.

PCT-PATENT PROSECUTION HIGHWAY REQUEST FOR U.S. PAT. APP. NO. 13/096,519 CLAIMS INDICATED AS HAVING NOVELTY, INVENTIVE STEP, AND INDUSTRIAL APPLICABILITY IN CORRESPONDING INTERNATIONAL PCT PATENT APPLICATION PCT/US2011/034293

1. A holder for an electrical device, the electrical device comprising a front with a screen, one or more sides with one or more side controls, and a back opposite the front, the holder comprising:

a cover configured to couple to the electrical device, the cover comprising:

a front portion;

a back portion opposite the front portion;

one or more side portions; and

a holding mechanism coupled to the back portion of the cover such that the holding mechanism is rotatable at least ninety degrees relative to the back portion of the cover, the holding mechanism comprising:

a strap assembly configured to couple to the back portion of the cover; and

a strap configured to couple to the strap assembly,

wherein:

the back portion has a substantially circular aperture;

at least a first portion of the strap assembly has a substantially circular shape;

the at least the first portion of the strap assembly is configured to couple to the cover at the substantially circular aperture of the back portion;

the holding mechanism is configured to rotate relative to the back portion of the cover such that the at least the first portion of the strap assembly is rotatable at least approximately ninety degrees around the substantially circular aperture of the back portion;

the holding mechanism is further configured such that at least a part of a hand of a user of the electrical device can slide between the strap assembly and the strap to removably couple the holding mechanism to the at least the part of the hand of the user of the electrical device;

the one or more side portions are configured such that the one or more side controls of the electrical device are accessible to the user when the cover is coupled to the electrical device;

the cover is configured such that the screen of the electrical device is accessible to the user when the cover is coupled to the electrical device; and

the cover is configured such that the front portion of the cover is adjacent to the back of the electrical device when the cover is coupled to the electrical device.

2. The holder of claim 1, wherein:

the holding mechanism is coupled to the back portion of the cover such that the holding mechanism is rotatable at least three hundred and sixty degrees relative to the back portion of the cover.

3. The holder of claim 1, wherein:

the holding mechanism is removably coupleable to at least one of:

one or more fingers of the hand of the user of the electrical device, the at least the part of the hand of the user of the electrical device comprises the one or more fingers of the hand of the user of the electrical device;

one or more knuckles and one or more fingers of the hand of the user of the electrical device, the at least the part of the hand of the user of the electrical device comprises the one or more knuckles and the one or more fingers of the hand of the user of the electrical device; or

a palm of the hand of the user of the electrical device, the at least the part of the hand of the user of the electrical device comprises the palm of the hand of the user of the electrical device.

4. The holder of claim 1, further comprising:

a hook mechanism removably coupleable to the back portion of the cover such that the hook mechanism is rotatable at least ninety degrees relative to the back portion of the cover, the hook mechanism comprises:

a hook assembly configured to removably couple to the back portion of the cover at the substantially circular aperture; and

a hook coupled to the hook assembly, the hook has a substantially J-shape, wherein:

the hook mechanism is configured to couple to the at least the part of the hand of the user of the electrical device;

the hook assembly is removably coupleable to the back portion of the cover when the holding mechanism is not coupled to the back portion of the cover; and

the strap assembly is removably coupleable to the back portion of the cover when the hook assembly is not coupled to the back portion of the cover.

5. The holder of claim 4, wherein:

the hook mechanism is configured such that the hook can be placed in a first position relative to the hook assembly such that the at least the part of the hand of the user of the electrical device is removably coupleable to the hook; and

the hook mechanism is further configured such that the hook can be placed in one or more second positions relative to the hook assembly such that the hook can rest on a surface to at least partially support the holder in an upright position.

6. The holder of claim 1, further comprising:

at least one first ring assembly coupled to the cover, the at least one first ring assembly comprises:

a base portion coupled to the cover; and

one or more rotatable portions coupled to the base portion such that the one or more rotatable portions and the holding mechanism are rotatable at least ninety degrees relative to the cover and the base portion.

7. The holder of claim 6, further comprising:

at least one second ring assembly coupled to the cover and the base portion such that the at least one second ring assembly is substantially immobile relative to the cover.

8. A case configured to removably couple to a portable electrical device, the portable electrical device having a front side with a screen, a left side coupled to the front side, a right side coupled to the front side and a back side opposite the front side and coupled to the left side and the right side, the case is configured to coupled to at least part of a hand of a user of the portable electrical device, the case comprising:

a body configured to removably couple to the portable electrical device;

a holding assembly coupled to the body, the holding assembly comprises:

a first coupling assembly configured to couple to the body; and

a hand coupling assembly coupled to the first coupling assembly and configured to removably couple to the at least the part of the hand of the user of the portable electrical device,

wherein:

at least a portion of the first coupling assembly is substantially circular-shaped;

the body comprises:

a back side with a first substantially circular aperture; and

a front side opposite the back side;

the at least the portion of the first coupling assembly that is substantially circular-shaped is removably coupled to the body at the first substantially circular aperture of the back side of the body;

the holding assembly is coupled to the body such that the holding assembly is rotatable at least ninety degrees relative to the body and the portable electrical device when the body is coupled to the portable electrical device and when the body is coupled to the holding assembly;

the holding assembly is further configured such that the at least the part of the hand of the user of the portable electrical device can slide into the holding assembly to removably couple the holding assembly to the at least the part of the hand of the user of the portable electrical device; and

the body is configured to couple to the portable electrical device such that the screen of the portable electrical device is useable when the body is coupled to the portable electrical device and when the back side of the portable electrical device is adjacent to the front side of the body.

9. The case of claim 8, wherein:

the holding assembly is configured such that the hand coupling assembly can be placed in a first position relative to the body such that the at least the part of the hand of the user of the portable electrical device is removably coupleable to the holding assembly; and

the holding assembly is further configured such that the holding assembly can be placed in one or more second positions relative to the body such that at least a portion of the holding assembly can rest on a surface to at least partially support the case in an upright position.

10. The case of claim 8, wherein:

the first coupling assembly comprises at least one of:

a stand assembly, the hand coupling assembly comprises a stand, and the holding assembly is configured such that the stand can be extended away from the stand assembly into one or more extended positions; or

a strap assembly configured to couple to the back side of the body, the hand coupling assembly comprises a strap configured to couple to the strap assembly.

11. The holder of claim 8, wherein:

the holding assembly is coupled to the body such that the holding assembly is rotatable at least three hundred and sixty degrees relative to the body and the portable electrical device when the body is coupled to the portable electrical device.

12. The case of claim 8, wherein:

the holding assembly is removably coupled to the body.

13. The case of claim 8, wherein:

the body further comprises:

one or more rotatable elements coupled to the back side of the body, the one or more rotatable elements comprise:

a base portion; and

one or more rotatable portions configured to couple to the holding assembly,

wherein:

the holding assembly is removably coupleable to the one or more rotatable portions of the one or more rotatable elements of the body such that the holding assembly and the one or more rotatable portion of the one or more rotatable elements of the body are rotatable at least three hundred and sixty degrees relative to the body and the portable electrical device when the body is coupled to the portable electrical device and when the body is coupled to the holding assembly; and

the base portion of the one or more rotatable elements of the body is configured to be substantially immobile when the one or more rotatable portions of the one or more rotatable elements of the body are rotated.

14. A method of providing a case for a portable electrical device, the portable electrical device having a front side with a screen, a left side coupled to the front side, a right side coupled to the front side and a back side opposite the front side and coupled to the left side and the right side, the case is configured to removably couple to at least part of a hand of a user of the portable electrical device, the method comprising:

providing a body configured to removably couple to the portable electrical device, the body comprising:

a front side;

a back side opposite the front side and having a first substantially circular aperture, wherein the body is configured to couple to the portable electrical device such that the screen of the portable electrical device is useable when the body is coupled to the portable electrical device and the back side of the portable electrical device is adjacent to the front side of the body;

providing a holding assembly configured such that the at least the part of the hand of the user of the portable electrical device can slide into the holding assembly to removably couple the holding assembly to the at least the part of the hand of the user of the portable electrical device, the holding assembly comprises:

a first coupling assembly coupled to the body wherein the first coupling assembly comprises at least a substantially circular-shaped portion; and

a hand coupling assembly coupled to the first coupling assembly and configured to removably couple to the at least the part of the hand of the user of the portable electrical device; and

coupling the holding assembly to the body by coupling the at least the substantially circular-shaped portion of the first coupling assembly of the holding assembly to the body at the first substantially circular aperture of the back side of the body and such that the holding assembly is rotatable at least ninety degrees relative to the body.

15. The method of claim 14, further comprising:

providing a filler cap configured to couple to the body when the holding assembly is not coupled to the body,

wherein:

coupling the holding assembly to the body comprises:

removably coupling the holding assembly to the body by coupling the at least the substantially circular-shaped portion of the first coupling assembly of the holding assembly to the body at the first substantially circular aperture of the back side of the body.

16. The method of claim 14, wherein:

coupling the holding assembly to the body comprises:

coupling the holding assembly to the body by coupling the at least the substantially circular-shaped portion of the first coupling assembly of the holding assembly to the body at the first substantially circular aperture of the back side of the body and such that the holding assembly is rotatable at least three hundred and sixty degrees relative to the body.

17. The method of claim 14, wherein:

providing the holding assembly comprises at least one of:

providing a first holding assembly comprising: a strap assembly configured to removably couple to the body; and a strap configured to removably couple to the strap assembly, the hand coupling assembly comprising the strap and the first coupling assembly comprising the strap assembly; or

providing a second holding assembly comprising: a hook assembly configured to removably couple to the body; and a hook configured to removably couple to the hook assembly, the hand coupling assembly comprising the hook and the first coupling assembly comprising the hook assembly.

18. A method of using a case with a portable electrical device, the case comprising a body and a first holding assembly, the first holding assembly configured to couple to at least a part of a hand of a user, the method comprising:

coupling the body of the case to the portable electrical device;

coupling the body to the first holding assembly;

coupling at least part of the hand of the user to the first holding assembly; and

rotating the body and the portable electrical device at least ninety degrees relative to the first holding assembly.

19. The method of claim 18, further comprising:

uncoupling the at least the part of the hand of the user from the first holding assembly;

extending a stand of the first holding assembly away from a stand assembly of the first holding assembly; and

resting the stand of the first holding assembly on a surface such that the body of the case is in an upright position.

20. The method of claim 18, further comprising:

uncoupling the at least the part of the hand of the user from the first holding assembly;

uncoupling the body from the first holding assembly;

coupling the body to a second holding assembly;

coupling the at least the part of the hand of the user to the second holding assembly; and

rotating the body and the portable electrical device at least ninety degrees relative to the second holding assembly,

wherein:

the first holding assembly comprises:

a strap assembly; and

a strap configured to couple to the strap assembly; and

the second holding assembly comprises:

a stand assembly; and

a substantially J-shaped stand coupled to the stand assembly.

UNITED STATES PATENT AND TRADEMARK OFFICE

Commissioner for Patents
United States Patent and Trademark Office
P.O. Box 1450
Alexandria, VA 22313-1450
www.uspto.gov

MAILED

MAR 14 2012

OFFICE OF PETITIONS

BRYAN CAVE LLP (BELKIN)
TWO NORTH CENTRAL AVENUE
SUITE 2200
PHOENIX AZ 85004

In re Application of:
Lane et al.
Application No. 13/096,519
Filed: April 28, 2011
Attorney Docket No. 0318430

: DECISION ON REQUEST TO
: PARTICIPATE IN THE PATENT
: PROSECUTION HIGHWAY
: PROGRAM AND PETITION
: TO MAKE SPECIAL UNDER
: 37 CFR 1.102(a)

This is a decision on the request to participate in the PCT Patent Prosecution Highway (PCT-PPH) pilot program and the petition under 37 CFR 1.102(a), filed December 16, 2011, to make the above-identified application special.

The request and petition are **DISMISSED**.

Discussion

A grantable request to participate in the PCT-PPH pilot program and petition to make special require:

(1) The U.S. application must have an eligible relationship to one or more PCT applications where the ISA or IPEA are the JPO, EPO, KIPO, IPAU, NPI, Australia, Austria, China, Finland, Russia, Spain, Sweden, or USPTO;

(2) At least one claim in the PCT application has novelty, inventive step, and industrial applicability and must be free of any observations in Box VIII in the latest work product in the international stage or applicant must identify and explain why the claim(s) is/are not subject to the observation in Box VIII;

(3) Applicant must submit a copy of the claim(s) from the PCT application(s) that have novelty, inventive step, and industrial applicability along with an English translation thereof and a statement that the English translation is accurate, if the claims are not in the English language;

(4) All the claims in the U.S. application must sufficiently correspond or be amended to sufficiently correspond to the claim(s) that have novelty, inventive step, and industrial applicability in the PCT application(s);

(5) Examination of the U.S. application has not begun;

(6) Applicant must submit a copy of the latest international work product from the PCT application indicating that the claim(s) have novelty, inventive step, and industrial applicability along with an English translation thereof and a statement that the English translation is accurate if the latest international work product is not in the English language;

(7) Applicant must submit an IDS listing the documents cited by the PCT examiner in the international work product along with copies of documents except U.S. patents or U.S. patent application publications.

(8) Applicant is required to submit a claims correspondence table in English which indicates how all the claims in the U.S. application correspond to the claims indicated as having novelty, inventive step and industrial applicability in the latest international work product.

Currently, requirements (1) – (6) and (8) are considered to have been met. However, the request to participate in the PPH pilot program and petition fail to meet requirement (7).

Regarding the requirement of condition (7), applicant has failed to submit a copy of the JP 4687821 reference listed on the December 16, 2011 IDS.

Applicant is given **ONE** opportunity within a time period of **ONE MONTH or THIRTY DAYS**, whichever is longer, from the mailing date of this decision to correct the deficiencies. **NO EXTENSION OF TIME UNDER 37 CFR 1.136 IS PERMITTED.** If the deficiencies are not corrected with the time period given, the application will await action in its regular turn.

Response must be filed via the Electronic Filing System (EFS) using the document description: Petition to make special under PCT – Patent Pros Hwy. Any preliminary amendments and IDS submitted with the PPH documents must be separately indexed as a preliminary amendment and IDS, respectively.

Telephone inquiries concerning this decision should be directed to Petitions Examiner Joan Olszewski at (571)-272-7751.

All other inquiries concerning the examination or status of the application is accessible in the PAIR system at http://www.uspto.gov/ebc/index.html.

/dab/
David Bucci
Petitions Examiner
Office of Petitions

Attorney Docket No. 0318430

IN THE UNITED STATES PATENT AND TRADEMARK OFFICE

In re Application of:	:	
	:	
Lane et al.	:	Confirmation No. 4727
	:	
Application No. 13/096,519	:	Filed: April 28, 2011

Title: Case Configured to Removably Couple to a Portable Electrical Device and Method of Providing and Use Thereof

RENEWED PETITION TO PARTICIPATE IN PCT PATENT PROSECUTION HIGHWAY (PCT-PPH) PILOT PROGRAM BETWEEN THE KOREAN INTELLECTUAL PROPERTY OFFICE (KIPO) AND THE USPTO

Mail Stop: Petition
Commissioner for Patents
P.O. Box 1450
Alexandria, VA 22313-1450

On December 16, 2011, a Request for Participation in the Patent Cooperation Treaty – Patent Prosecution Highway (PCT-PPH) Pilot Program Between the Korean Intellectual Property Office (KIPO) and the USPTO was filed along with the appropriate corresponding information. That Request referred to an Information Disclosure Statement which was filed on December 16, 2011 for the above-referenced application. On March 14, 2012, the Decision on Request to Participate in the Patent Prosecution Highway Program and Petition to Make Special Under 37 C.F.R. §1.102(a) was received dismissing Applicants' Request because Applicant failed to submit a copy of JP 4687821 in the Information Disclosure Statement filed on December 16, 2011. Applicant submits that reference JP 4687821 was not available for submission but that this reference is the equivalent of US Publication No. 20100296235 which was also listed on the December 16, 2011 Information Disclosure Statement. As such, Applicant hereby requests that the Request for Participation in the Patent Cooperation Treaty- Patent Prosecution Highway (PCT-PPH) Pilot Program Between the Korean Intellectual Property Office (KIPO) and the USPTO be reconsidered and granted as all requirements to participate in the program have been met.

Applicant believes that no fees should be required for the consideration of this renewed petition however, the Commissioner for Patents is hereby authorized to charge any additional required fees necessitated by this Petition or credit any overpayment, to Account No. 02-4467.

If matters can be discussed by telephone to further the issuance of this application, Applicant invites USPTO to call the undersigned attorney at the USPTO's convenience.

Respectfully submitted,

BRYAN CAVE LLP
Two North Central Avenue
Suite 2200
Phoenix, AZ 85004-4406

Walter P Opaska
Attorney for Applicant
Reg. No. 54,349
Tel. (602) 364-7000

UNITED STATES PATENT AND TRADEMARK OFFICE

UNITED STATES DEPARTMENT OF COMMERCE
United States Patent and Trademark Office
Address: COMMISSIONER FOR PATENTS
P.O. Box 1450
Alexandria, Virginia 22313-1450
www.uspto.gov

APPLICATION NO.	FILING DATE	FIRST NAMED INVENTOR	ATTORNEY DOCKET NO.	CONFIRMATION NO.
13/096,521	04/28/2011	Seiji Tsukada	102238.63559US	4734

7590 12/08/2011

CROWELL & MORING LLP
INTELLECTUAL PROPERTY GROUP
P.O. BOX 14300
WASHINGTON, DC 20044-4300

EXAMINER	
KOENIG, ANDREW Y	
ART UNIT	PAPER NUMBER
2423	
MAIL DATE	DELIVERY MODE
12/08/2011	PAPER

DECISION GRANTING PETITION UNDER 37 CFR 1.138(d)

The declaration of express abandonment is recognized

This is in response to the petition under 37 CFR 1.138(d), requesting for a refund of any previously paid search fee and excess claims fee in the above-identified application.

The petition is granted.

The express abandonment is recognized. Any previously paid search fee and excess claims fee are hereby refunded.

Telephone inquiries should be directed to the Office of Data Management at (571) 272-4200.

Patent Publication Branch
Office of Data Management

UNITED STATES PATENT AND TRADEMARK OFFICE

Commissioner for Patents
United States Patent and Trademark Office
P.O. Box 1450
Alexandria, VA 22313-1450
www.uspto.gov

PPG Industries, Inc.
Law Department - Intellectual Property
39th Floor
One PPG Place
Pittsburgh PA 15272-0001

MAILED
NOV 04 2011
OFFICE OF PETITIONS

In re Application of :
Chopra et al. :
Application No. 13/096,592 : ON PETITION
Deposit date: April 28, 2011 :
Attorney Docket No. 08005892A1 :
For: PHOTOCHROMIC MATERIALS THAT INCLUDE 6-AMINO SUBSTITUTED INDENO-FUSED NAPHTHOPYRANS

This is a decision on the petition, filed October 14, 2011 under 37 CFR 1.57(a) to accord a filing date of April 28, 2011 to the above-identified application. The petition will be treated under 37 CFR 1.53(e).

The petition under 37 CFR 1.53(e) is **GRANTED**.

The application was deposited on April 28, 2011. However, on October 7, 2011, the Office of Patent Application Processing mailed a "Notice of Incomplete Nonprovisional Application" requiring drawings of applicants' invention and stating that the filing date would be the date of receipt of the omitted drawings. It is noted that the specification filed on April 28, 2011 references Figures 1 and 2, but no drawing figures labeled as such were filed on April 28, 2011.

As stated in MPEP 601.01(f), it has been USPTO practice to treat an application that contains at least one process or method claim as an application for which a drawing is not necessary for an understanding of the invention under 35 U.S.C. 113 (first sentence). The same practice has been followed in composition applications.

MPEP 601.01(f) also states that:

> A nonprovisional application having at least one claim, or a provisional application having at least some disclosure, directed to the subject matter discussed above for which a drawing is usually not considered essential for a filing date, describing drawing figures in the specification, but filed without drawings will be treated as an application filed without all of the drawings figures

referred to in the specification as discussed in MPEP 601.01(g), so long as the application contains something that can be construed as a written description.

This application contains composition claims. Therefore, the application should have been treated as an application filed without all of the drawing figures referred to in the specification as discussed in MPEP 601.01(g).

MPEP 601.01(g) states that if an application is filed without all of the drawing figures referred to in the specification, a "Notice of Omitted Items" is mailed indicating that the application has been accorded a filing date, but is lacking some of the figures of drawings described in the specification.

In view of the above, the "Notice" mailed October 7, 2011 was mailed in error and is hereby withdrawn. The application is entitled to a filing date of April 28, 2011. The petition under 37 CFR 1.53(e) is **granted**.

Given the basis for granting this petition, the $400.00 petition fee filed with the instant petition is being refunded to deposit account no. 16-2025.

Pursuant to this decision, the application will be referred to Office of Patent Application Processing for:

X correction of the filing date to April 28, 2011;
X for indication in Office records, as appropriate, that "0" sheets of drawings were present on filing; and
X for issuance of a filing receipt.

Thereafter, the application will be referred to Technology Center 1624 for the examiner of record's consideration of the preliminary amendment filed October 14, 2011.

Telephone inquiries specific to this matter should be directed to the undersigned at (571) 272-3230.

Shirene Willis Brantley
Senior Petitions Attorney
Office of Petitions

Doc Code: PET.GREEN
Document Description: Petition for Green Tech Pilot

PTO/SB/420 (03-11)

PETITION TO MAKE SPECIAL UNDER THE GREEN TECHNOLOGY PILOT PROGRAM

Attorney Docket Number: 02-0796	Application Number (if known):	Filing date:

First Named Inventor: Sheng Tai LEE

Title: CIRCUITS AND METHODS FOR DRIVING LIGHT SOURCES

APPLICANT HEREBY REQUESTS TO PARTICIPATE IN THE GREEN TECHNOLOGY PILOT PROGRAM FOR THE ABOVE-IDENTIFIED APPLICATION. See Instruction Sheet on page 2.

This petition must be timely filed electronically using the USPTO electronic filing system, EFS-Web.

1. By filing this petition:

   Applicant is requesting early publication: Applicant hereby requests early publication under 37 CFR 1.219 and the publication fee set forth in 37 CFR 1.18(d) accompanies this request.

2. By filing this petition: applicant is agreeing to make an election without traverse in a telephonic interview and elect an invention that meets the eligibility requirements for the Green Technology Pilot Program, if the Office determines that the claims are not obviously directed to a single invention. See Instruction Sheet.

3. This request is accompanied by statements of special status for the eligibility requirement.

4. The application contains no more than three (3) independent claims and twenty (20) total claims.

5. The application does not contain any multiple dependent claims.

6. Other attachments: _____

Signature /Yue Li/	Date 2011-04-28
Name (Print/Typed) Yue LI	Registration Number L0346

Note: *Signatures of all the inventors or assignees of record of the entire interest or their representative(s) are required in accordance with 37 CFR 1.33 and 11.18. Please see 37 CFR 1.4(d) for the form of the signature. If necessary, submit multiple forms for more than one signature, see below*.*

☐ *Total of _____ forms are submitted.

If you need assistance in completing the form, call 1-800-PTO-9199 and select option 2.

Instruction Sheet for
Petition to Make Special Under the Green Technology Pilot Program

(Not to be Submitted to the USPTO)

The following is a summary of the requirements (for more information see the notices (i) "Pilot Program for Green Technologies Including Greenhouse Gas Reduction," (ii) "Elimination of Classification Requirement in the Green Technology Pilot Program," and (iii) "Expansion and Extension of the Green Technology Pilot Program," available on the USPTO web site at http://www.uspto.gov/patents/init_events/green_tech.jsp):

(1) The application must be a non-reissue, non-provisional utility application filed under 35 U.S.C. 111(a), or an international application that has entered the national stage in compliance with 35 U.S.C. 371, irrespective of the filing date of the application. Reexamination proceedings are excluded from this pilot program.

(2) The application must contain three or fewer independent claims and twenty or fewer total claims. The application must not contain any multiple dependent claims. For an application that contains more than three independent claims or twenty total claims, or multiple dependent claims, applicant must file a preliminary amendment in compliance with 37 CFR 1.121 to cancel the excess claims and/or the multiple dependent claims at the time the petition to make special is filed.

(3) The claims must be directed to a single invention that materially enhances the quality of the environment, or that materially contributes to: (1) the discovery or development of renewable energy resources; (2) the more efficient utilization and conservation of energy resources; or (3) green house gas emission reduction (see the eligibility requirements of sections II and III of the notice (i) cited above). The petition must include a statement that, if the USPTO determines that the claims are directed to multiple inventions (e.g., in a restriction requirement), applicant will agree to make an election without traverse in a telephonic interview, and elect an invention that meets the eligibility requirements in section II or III of the notice (i) cited above.

(4) The petition to make special must be timely filed electronically using the USPTO electronic filing system, EFS-Web, and selecting the document description of "Petition for Green Tech Pilot" on the EFS-Web screen. Applicant should use form PTO/SB/420, which is available as a Portable Document Format (PDF) fillable form in EFS-Web and on the USPTO Web site.

(5) The petition to make special must be filed at least one day prior to the date that a first Office action (which may be an Office action containing only a restriction requirement) appears in the Patent Application Information Retrieval (PAIR) system. Applicant may check the status of the application using PAIR.

(6) The petition to make special must be accompanied by a request for early publication in compliance with 37 CFR 1.219 and the publication fee set forth in 37 CFR 1.18(d).

Privacy Act Statement

The **Privacy Act of 1974 (P.L. 93-579)** requires that you be given certain information in connection with your submission of the attached form related to a patent application or patent. Accordingly, pursuant to the requirements of the Act, please be advised that: (1) the general authority for the collection of this information is 35 U.S.C. 2(b)(2); (2) furnishing of the information solicited is voluntary; and (3) the principal purpose for which the information is used by the U.S. Patent and Trademark Office is to process and/or examine your submission related to a patent application or patent. If you do not furnish the requested information, the U.S. Patent and Trademark Office may not be able to process and/or examine your submission, which may result in termination of proceedings or abandonment of the application or expiration of the patent.

The information provided by you in this form will be subject to the following routine uses:

1. The information on this form will be treated confidentially to the extent allowed under the Freedom of Information Act (5 U.S.C. 552) and the Privacy Act (5 U.S.C 552a). Records from this system of records may be disclosed to the Department of Justice to determine whether disclosure of these records is required by the Freedom of Information Act.
2. A record from this system of records may be disclosed, as a routine use, in the course of presenting evidence to a court, magistrate, or administrative tribunal, including disclosures to opposing counsel in the course of settlement negotiations.
3. A record in this system of records may be disclosed, as a routine use, to a Member of Congress submitting a request involving an individual, to whom the record pertains, when the individual has requested assistance from the Member with respect to the subject matter of the record.
4. A record in this system of records may be disclosed, as a routine use, to a contractor of the Agency having need for the information in order to perform a contract. Recipients of information shall be required to comply with the requirements of the Privacy Act of 1974, as amended, pursuant to 5 U.S.C. 552a(m).
5. A record related to an International Application filed under the Patent Cooperation Treaty in this system of records may be disclosed, as a routine use, to the International Bureau of the World Intellectual Property Organization, pursuant to the Patent Cooperation Treaty.
6. A record in this system of records may be disclosed, as a routine use, to another federal agency for purposes of National Security review (35 U.S.C. 181) and for review pursuant to the Atomic Energy Act (42 U.S.C. 218(c)).
7. A record from this system of records may be disclosed, as a routine use, to the Administrator, General Services, or his/her designee, during an inspection of records conducted by GSA as part of that agency's responsibility to recommend improvements in records management practices and programs, under authority of 44 U.S.C. 2904 and 2906. Such disclosure shall be made in accordance with the GSA regulations governing inspection of records for this purpose, and any other relevant (*i.e.*, GSA or Commerce) directive. Such disclosure shall not be used to make determinations about individuals.
8. A record from this system of records may be disclosed, as a routine use, to the public after either publication of the application pursuant to 35 U.S.C. 122(b) or issuance of a patent pursuant to 35 U.S.C. 151. Further, a record may be disclosed, subject to the limitations of 37 CFR 1.14, as a routine use, to the public if the record was filed in an application which became abandoned or in which the proceedings were terminated and which application is referenced by either a published application, an application open to public inspection or an issued patent.
9. A record from this system of records may be disclosed, as a routine use, to a Federal, State, or local law enforcement agency, if the USPTO becomes aware of a violation or potential violation of law or regulation.

O2-0796

IN THE UNITED STATES PATENT AND TRADEMARK OFFICE

Applicant:	Sheng Tai Lee et al.	Examiner:	
Serial No.:		Group Art Unit:	
Filed:	xx/xx/2011	Docket:	O2-0792

Confirmation No.:

Title: CIRCUITS AND METHODS FOR DRIVING LIGHT SOURCES

STATEMENT OF SPECIAL STATUS FOR PETITION TO MAKE SPECIAL UNDER THE GREEN TECHNOLOGY PILOT PROGRAM

Commissioner for Patents
P.O. Box 1450
Alexandria, VA 22313-1450

Dear Sir:

BASIS FOR SPECIAL STATUS

Special status under the Green Technology Pilot program is sought because the claimed subject matter of this Application materially contributes to the more efficient utilization and conservation of energy resources. Further, the claimed subject matter of this Application materially enhances the quality of the environment through energy conservation.

HOW THE MATERIALITY STANDARD IS MET

The claimed subject matter of this Application is directed to driving circuit and controller for controlling power to light sources, such as light emitting diode (LED) light source. The claimed subject matter employs an AC/DC linear converter to regulate a current through the LED light source. The AC/DC linear converter in the claimed subject matter does not generated electromagnetic interference (EMI) noise, and thus does not require EMI filter. Furthermore, the driving circuits employing the AC/DC linear converter can achieve relatively high power efficiency and power factor. According present invention, the AC/DC linear converter and the LED light source can be integrated on a single PCB. Due to the relatively small size, the claimed subject matter can be used in industrial equipment, commercial equipment, and household appliances including, but are not limited to E12, E14, E17 light bulbs or T-5 and T-8 tubes, to materially contribute to the more efficient utilization and conservation of energy resources.

An example of a household appliance is an LED lamp. In an LED lamp, one or more LEDs are driven by a driving circuit to generate light output. The claimed subject matter may be employed herein to regulate power to the lamp, thereby controlling the brightness.

LEDs have a multitude of environmental advantages. Unlike incandescent and fluorescent bulbs, an LED light source does not utilize a filament or any type of luminary gas. LEDs contain no harmful chemicals such as mercury which is found in

fluorescent lights. LEDs are manufactured from materials that can be fully recycled. Most energy used by the LED is converted into light, not heat. Traditional lighting is relatively inefficient due to the large amounts of heat generated in the production of light. Moreover, LEDs have a longer lifespan.

The Commissioner is hereby authorized to charge fees associated with this communication or credit any overpayment to Deposit Account No.: 50-4245.

Please direct all correspondence concerning the above-identified application to the following address:

O2MICRO INC.
3118 Patrick Henry Dr.
Santa Clara, California 95054
(408) 987-5920
71271

Respectfully submitted,

Date: April 28, 2011

By: /Yue Li/
Yue Li
Reg. No. L0346

UNITED STATES PATENT AND TRADEMARK OFFICE

UNITED STATES DEPARTMENT OF COMMERCE
United States Patent and Trademark Office
Address: COMMISSIONER FOR PATENTS
P.O. Box 1450
Alexandria, Virginia 22313-1450
www.uspto.gov

APPLICATION NO.	FILING DATE	FIRST NAMED INVENTOR	ATTORNEY DOCKET NO.	CONFIRMATION NO.
13/096,646	04/28/2011	Sheng Tai LEE	0796	4984

71271 7590 06/14/2011

PATENT PROSECUTION
O2MIRCO , INC.
3118 PATRICK HENRY DRIVE
SANTA CLARA, CA 95054

EXAMINER	
ART UNIT	PAPER NUMBER
2821	

MAIL DATE	DELIVERY MODE
06/14/2011	PAPER

Please find below and/or attached an Office communication concerning this application or proceeding.

The time period for reply, if any, is set in the attached communication.

UNITED STATES PATENT AND TRADEMARK OFFICE

Commissioner for Patents
United States Patent and Trademark Office
P.O. Box 1450
Alexandria, VA 22313-1450
www.uspto.gov

PATENT PROSECUTION
O2MIRCO , INC.
3118 PATRICK HENRY DRIVE
SANTA CLARA CA 95054

In re Application of	:	
LEE et al.	:	DECISION ON PETITION
Application No. 13/096,646	:	TO MAKE SPECIAL UNDER
Filed: April 28, 2011	:	THE GREEN TECHNOLOGY
Attorney Docket No. 0796	:	PILOT PROGRAM

This is a decision on the petition under 37 CFR 1.102, filed on April 28, , to make the above-identified application special under the pilot program for applications pertaining to Green Technologies as set forth 74 Federal Register Notice 64666 (December 8, 2009) and amended by 75 Federal Register Notice 28554 (May 21, 2010) and 75 Federal Register Notice 69049 (November 10, 2010).

The petition is **GRANTED**.

A grantable petition to make an application special under 37 CFR 1.102 and the pilot program as set forth in 74 FR 64666 must be directed to a nonprovisional application filed under 35 USC 111(a) or be a national stage entry under 35 USC 371, exclusive of any reissue applications.

In order to qualify for special status, the following requirements must be met. 1) The application must have no more than 3 independent claims and no more than 20 total claims. 2) The application must not contain any multiple dependent claims. 3) The petition must state the basis for seeking special status, i.e., the claimed invention either: A) materially enhances the quality of the environment or B) materially contributes to: i) the discovery or development of renewable energy resources, ii) the more efficient utilization and conservation of energy resources, or iii) greenhouse gas emission reduction. 4) If the disclosure is not clear on its face that the claimed invention materially contributes under category (A) or (B), the petition must be accompanied by a statement by the applicant, assignee, or an attorney/agent registered to practice before the Office explaining how the materiality standard is met. 5) A statement that applicant will agree to make an election without traverse in a telephonic interview if a restriction requirement is made by the examiner. 6) The petition to make special must be filed electronically. 7) The petition must be filed at least one day prior to the date that a first Office Action appears in the Patent Application Information Retrieval (PAIR) system. 8) The petition must be accompanied by a request for early publication in compliance with 37 CFR 1.219 and include the publication fee as set forth in 37 CFR 1.18(d).

The requirement for a fee for consideration of the petition to make special for applications pertaining to Green Technologies has been waived.

The instant petition complies with items 1 – 8 above. Accordingly, the above-identified application has been accorded "special" status.

Telephone inquires concerning this decision should be directed to Lee W. Young at 571-272-4549.

The application is being forwarded to the Technology Center Art Unit 2821 for action on the merits commensurate with this decision.

Lee W. Young
Quality Assurance Specialist
Technology Center 2800

Doc Code: PPH.PCT.652
Document Description: Petition to make special under PCT-Patent Pros Hwy

PTO/SB/20PCT-KR (06-10)
Approved for use through 01/31/2015. OMB 0651-0058
U.S. Patent and Trademark Office; U.S DEPARTMENT OF COMMERCE
Under the Paperwork Reduction Act of 1995, no persons are required to respond to a collection of information unless it displays a valid OMB control number.

REQUEST FOR PARTICIPATION IN THE PATENT COOPERATION TREATY – PATENT PROSECUTION HIGHWAY (PCT-PPH) PILOT PROGRAM BETWEEN THE KOREAN INTELLECTUAL PROPERTY OFFICE (KIPO) AND THE USPTO

Application No.:	13/096,648	First Named Inventor:	Paslaski
Filing Date:	04/28/2011	Attorney Docket No.:	XPNT66NP
Title of the Invention:	Cross-talk reduction in a bidirectional optoelectronic device		

THIS REQUEST FOR PARTICIPATION IN THE PCT-PPH PILOT PROGRAM ALONG WITH THE REQUIRED DOCUMENTS MUST BE SUBMITTED VIA EFS-WEB. INFORMATION REGARDING EFS-WEB IS AVAILABLE AT HTTP://WWW.USPTO.GOV/EBC/EFS_HELP.HTML.

APPLICANT HEREBY REQUESTS PARTICIPATION IN THE PCT-PPH PILOT PROGRAM AND PETITIONS TO MAKE THE ABOVE-IDENTIFIED APPLICATION SPECIAL UNDER THE PCT-PPH PILOT PROGRAM.

The above-identified application is (1) a national stage entry of the corresponding PCT application, or (2) a national stage entry of another PCT application which claims priority to the corresponding PCT application, or (3) a national application that claims domestic/ foreign priority to the corresponding PCT application, or (4) a national application which forms the basis for the priority claim in the corresponding PCT application, or (5) a continuing application of a U.S. application that satisfies one of (1) to (4) above, or (6) a U.S. application that claims domestic benefit to a U.S. provisional application which forms the basis for the priority claim in the corresponding PCT application.

The corresponding PCT application number(s) is/are: PCT/2011/034356

The international filing date of the corresponding PCT application(s) is/are: 28 APRIL 2011

I. List of Required Documents:

a. **A copy of the latest international work product (WO/ISA, WO/IPEA, or IPER) in the above-identified corresponding PCT application(s)**

☑ is attached.

☐ is not attached because the document is already in the U.S. application.

b. **A copy of all claims which were indicated as having novelty, inventive step and industrial applicability in the above-identified corresponding PCT application(s)**

☑ is attached.

☐ is not attached because the document is already in the U.S. application.

c. **English translations of the documents in a. and b. above are attached (if the documents are not in the English language). A statement that the English translation is accurate is attached for the document in b. above.**

d. **(1) An information disclosure statement listing the documents cited in the international work products (ISR, WO/ISA, WO/IPEA, IPER) of the corresponding PCT application.**

☑ is attached.

☐ has already been filed in the above-identified U.S. application on _____

(2) Copies of all documents (except for U.S. patents or U.S. patent application publications)

☑ are attached.

☐ have already been filed in the above-identified U.S. application on _____

This collection of information is required by 35 U.S.C. 119, 37 CFR 1.55, and 37 CFR 1.102(d). The information is required to obtain or retain a benefit by the public, which is to file (and by the USPTO to process) an application. Confidentiality is governed by 35 U.S.C. 122 and 37 CFR 1.11 and 1.14. This collection is estimated to take 2 hours to complete, including gathering, preparing, and submitting the completed application form to the USPTO. Time will vary depending upon the individual case. Any comments on the amount of time you require to complete this form and/or suggestions for reducing this burden should be sent to the Chief Information Officer, U.S. Patent and Trademark Office, U.S. Department of Commerce, P.O. Box 1450, Alexandria, VA 22313-1450. DO NOT SEND FEES OR COMPLETED FORMS TO THIS ADDRESS.

PTO/SB/20PCT-KR (06-10)
Approved for use through 01/31/2015. OMB 0651-0058
U.S. Patent and Trademark Office; U.S DEPARTMENT OF COMMERCE
Under the Paperwork Reduction Act of 1995, no persons are required to respond to a collection of information unless it displays a valid OMB control number.

REQUEST FOR PARTICIPATION IN THE PCT-PPH PILOT PROGRAM BETWEEN THE KIPO AND THE USPTO

(continued)

Application No.:	13/096,648	First Named Inventor:	Paslaski

II. Claims Correspondence Table:

Claims in US Application	Patentable Claims in the corresponding PCT application	Explanation regarding the correspondence
1-13, 15	1-13, 15	identical
21, 22, 24-28	21, 22, 24-28	identical except for deleted multiple dependency
29, 31, 32, 36, 38, 39	29, 31, 32, 36, 38, 39	identical
46-59, 61	46-59, 61	identical
67, 68, 70-74	67, 68, 70-74	identical except for deleted multiple dependency
75, 77, 78, 82, 84, 85	75, 77, 78, 82, 84, 85	identical
170	28	identical except for deleted multiple dependency
171	74	identical except for deleted multiple dependency

III. All the claims in the US application sufficiently correspond to the patentable claims in the corresponding PCT application.

Signature /David S Alavi - 40310/	Date 03/29/2012
Name (Print/Typed) David S Alavi	Registration Number 40310

PATENT COOPERATION TREATY

From the INTERNATIONAL SEARCHING AUTHORITY

To:

ALAVI DAVID S.

2852 WILLAMETTE STREET #402 EUGENE OR 97405 USA

PCT

NOTIFICATION OF TRANSMITTAL OF THE INTERNATIONAL SEARCH REPORT AND THE WRITTEN OPINION OF THE INTERNATIONAL SEARCHING AUTHORITY, OR THE DECLARATION

(PCT Rule 44.1)

Date of mailing *(day/month/year)*	22 DECEMBER 2011 (22.12.2011)
Applicant's or agent's file reference: XPNT66PCT	**FOR FURTHER ACTION** See paragraphs 1 and 4 below
International application No.: **PCT/US2011/034356**	International filing date *(day/month/year)*: **28 APRIL 2011 (28.04.2011)**
Applicant: **HOYA CORPORATION USA**	

1. ☒ The applicant is hereby notified that the international search report and the written opinion of the International Searching Authority have been established and are transmitted herewith.

Filing of amendments and statement under Article 19:

The applicant is entitled, if he so wishes, to amend the claims of the international application (see Rule 46):

When? The time limit for filing such amendments is normally two months from the date of transmittal of the international search report.

Where? Directly to the International Bureau of WIPO, 34 chemin des Colombettes 1211 Geneva 20, Switzerland, Facsimile No.: +41 22 338 82 70

For more detailed instructions, see *PCT Applicant's Guide*, International Phase, paragraphs 9.004 . 9.011.

2. ☐ The applicant is hereby notified that no international search report will be established and that the declaration under Article 17(2)(a) to that effect and the written opinion of the International Searching Authority are transmitted herewith.

3. ☐ **With regard to any protest** against payment of (an) additional fee(s) under Rule 40.2, the applicant is notified that:

☐ the protest together with the decision thereon has been transmitted to the International Bureau together with any request to forward the texts of both the protest and the decision thereon to the designated Offices.

☐ no decision has been made yet on the protest; the applicant will be notified as soon as a decision is made.

4. **Reminders**

The applicant may submit comments on an informal basis on the written opinion of the International Searching Authority to the International Bureau. The International Bureau will send a copy of such comments to all designated Offices unless an international preliminary examination report has been or is to be established. Following the expiration of 30 months from the priority date, these comments will also be made available to the public.

Shortly after the expiration of **18 months** from the priority date, the international application will be published by the International Bureau. If the applicant wishes to avoid or postpone publication, a notice of withdrawal of the international application, or of the priority claim, must reach the International Bureau before the completion of the technical preparations for international publication (Rules 90bis.1 and 90bis.3).

Within **19 months** from the priority date, but only in respect of some designated Offices, a demand for international preliminary examination must be filed if the applicant wishes to postpone the entry into the national phase **until 30 months** from the priority date (in some Offices even later); otherwise, the applicant must, **within 20 months** from the priority date, perform the prescribed acts for entry into the national phase before those designated Offices.

In respect of other designated Offices, the time limit of **30 months** (or later) will apply even if no demand is filed within 19months.

For details about the applicable time limits, Office by Office, see www.wipo.int/pct/en/texts/time_limits.html and the PCT Applicant's Guide, National Chapters.

Name and mailing address of the ISA/KR Korean Intellectual Property Office Government Complex-Daejeon, 189 Cheongsa-ro, Seo-gu, Daejeon 302-701, Republic of Korea Facsimile No. 82-42-472-7140	Authorized officer COMMISSIONER Telephone No. 82-42-481-8755

PATENT COOPERATION TREATY

PCT

INTERNATIONAL SEARCH REPORT

(PCT Article 18 and Rules 43 and 44)

Applicant's or agent's file reference	**FOR FURTHER ACTION**	see Form PCT/ISA/220 as well as, where applicable, item 5 below.
XPNT66PCT		
International application No.	International filing date *(day/month/year)*	(Earliest) Priority Date *(day/month/year)*
PCT/US2011/034356	**28 APRIL 2011 (28.04.2011)**	28 APRIL 2010 (28.04.2010)
Applicant		
HOYA CORPORATION USA		

This International search report has been prepared by this International Searching Authority and is transmitted to the applicant according to Article 18. A copy is being transmitted to the International Bureau.

This international search report consists of a total of 4 sheets.

☐ It is also accompanied by a copy of each prior art document cited in this report.

1. **Basis of the report**
   a. With regard to the **language**, the international search was carried out on the basis of:
      ☒ the international application in the language in which it was filed
      ☐ a translation of the international application into _____, which is the language of a translation furnished for the purposes of international search (Rules 12.3(a) and 23.1(b))
   b. ☐ This international search report has been established taking into account the **rectification of an obvious mistake** authorized by or notified to this Authority under Rule 91 (Rule 43.6*bis*(a)).
   c. ☐ With regard to any **nucleotide and/or amino acid sequence** disclosed in the international application, see Box No. I.
2. ☐ **Certain claims were found unsearchable** (See Box No. II)
3. ☒ **Unity of invention is lacking** (See Box No. III)
4. With regard to the **title,**
   ☒ the text is approved as submitted by the applicant.
   ☐ the text has been established by this Authority to read as follows:
5. With regard to the **abstract,**
   ☒ the text is approved as submitted by the applicant.
   ☐ the text has been established, according to Rule 38.2, by this Authority as it appears in Box No. IV. The applicant may, within one month from the date of mailing of this international search report, submit comments to this Authority.
6. With regard to the drawings,
   a. the figure of the **drawings** to be published with the abstract is Figure No. 7
      ☒ as suggested by the applicant.
      ☐ as selected by this Authority, because the applicant failed to suggest a figure.
      ☐ as selected by this Authority, because this figure better characterizes the invention.
   b. ☐ none of the figure is to be published with the abstract.

INTERNATIONAL SEARCH REPORT

International application No.
PCT/US2011/034356

Box No. II Observations where certain claims were found unsearchable (Continuation of item 2 of first sheet)

This international search report has not been established in respect of certain claims under Article 17(2)(a) for the following reasons:

1. ☐ Claims Nos.:
because they relate to subject matter not required to be searched by this Authority, namely:

2. ☐ Claims Nos.:
because they relate to parts of the international application that do not comply with the prescribed requirements to such an extent that no meaningful international search can be carried out, specifically:

3. ☐ Claims Nos.:
because they are dependent claims and are not drafted in accordance with the second and third sentences of Rule 6.4(a).

Box No. III Observations where unity of invention is lacking (Continuation of item 3 of first sheet)

This International Searching Authority found multiple inventions in this international application, as follows:

Group I:
Claims 1-45, drawn to a bidirectional optoelectronic device comprising a photodetector, a light source and a driver circuit.
Claims 46-91, drawn to a method using the bidirectional optoelectronic device.
Group II:
Claim 92, drawn to a multi-channel optoelectronic device comprising optoelectronic components and a protective encapsulant.
Claims 93-131, drawn to a bidirectional optoelectronic device comprising optoelectronic components and a protective encapsulant.
Group III:
Claims 132-151, drawn to an optical apparatus comprising waveguides, light collectors and light traps.
Claims 152-169, drawn to a method using the optical apparatus.

1. ☐ As all required addtional search fees were timely paid by the applicant, this international search report covers all searchable claims.

2. ☐ As all searchable claims could be searched without effort justifying an additional fee, this Authority did not invite payment of any additional fee.

3. ☐ As only some of the required additional search fees were timely paid by the applicant, this international search report covers only those claims for which fees were paid, specifically claims Nos.:

4. ☒ No required additional search fees were timely paid by the applicant. Consequently, this international search report is restricted to the invention first mentioned in the claims; it is covered by claims Nos.: 1-91

Remark on Protest

☐ The additional search fees were accompanied by the applicant's protest and, where applicable, the payment of a protest fee.
☐ The additional search fees were accompanied by the applicant's protest but the applicable protest fee was not paid within the time limit specified in the invitation.
☐ No protest accompanied the payment of additional search fees.

INTERNATIONAL SEARCH REPORT

International application No.
PCT/US2011/034356

A. CLASSIFICATION OF SUBJECT MATTER

H04B 10/18(2006.01)i, H04B 10/02(2006.01)i, G02B 6/42(2006.01)i

According to International Patent Classification (IPC) or to both national classification and IPC

B. FIELDS SEARCHED

Minimum documentation searched (classification system followed by classification symbols)

H04B 10/18; H04J 14/02; H04J 14/08; H04B 10/00; G02B 6/36; H04B 10/04; H01L 29/22

Documentation searched other than minimum documentation to the extent that such documents are included in the fields searched

Korean utility models and applications for utility models
Japanese utility models and applications for utility models

Electronic data base consulted during the international search (name of data base and, where practicable, search terms used)

eKOMPASS(KIPO internal) & Keywords: transceiver, photo detector, laser diode, drive circuit, balanced

C. DOCUMENTS CONSIDERED TO BE RELEVANT

Category*	Citation of document, with indication, where appropriate, of the relevant passages	Relevant to claim No.
A	US 2005-0078916 A1 (LUCY, G. HOSKING) 14 April 2005 See abstract, Figs. 2B,2C,4, paragraphs [32]-[34]	1-91
A	US 2001-0009469 A1 (KATSUHIRO SHIMIZU et al.) 26 July 2001 See abstract, Fig. 6	1,46
A	US 05677779A A (ODA; GAN et al.) 14 October 1997 See abstract, Figs. 12,13,15	1,46
A	US 2007-0131955 A1 (JEONG PARK et al.) 14 June 2007 See abstract, Figs. 4,5	1,46
A	US 2005-0117904 A1 (YOUNGWAN CHOI et al.) 02 June 2005 See abstract, Fig. 2	1,46
E	US 2011-0217045 A1 (WATSON CHRISTOPHER et al.) 08 September 2011 See abstract, Fig. 1	1,46

☐ Further documents are listed in the continuation of Box C.

☒ See patent family annex.

* Special categories of cited documents:

"A" document defining the general state of the art which is not considered to be of particular relevance

"E" earlier application or patent but published on or after the international filing date

"L" document which may throw doubts on priority claim(s) or which is cited to establish the publication date of citation or other special reason (as specified)

"O" document referring to an oral disclosure, use, exhibition or other means

"P" document published prior to the international filing date but later than the priority date claimed

"T" later document published after the international filing date or priority date and not in conflict with the application but cited to understand the principle or theory underlying the invention

"X" document of particular relevance; the claimed invention cannot be considered novel or cannot be considered to involve an inventive step when the document is taken alone

"Y" document of particular relevance; the claimed invention cannot be considered to involve an inventive step when the document is combined with one or more other such documents,such combination being obvious to a person skilled in the art

"&" document member of the same patent family

Date of the actual completion of the international search	Date of mailing of the international search report
22 DECEMBER 2011 (22.12.2011)	**22 DECEMBER 2011 (22.12.2011)**

Name and mailing address of the ISA/KR

Korean Intellectual Property Office
Government Complex-Daejeon, 189 Cheongsa-ro,
Seo-gu, Daejeon 302-701, Republic of Korea

Facsimile No. 82-42-472-7140

Authorized officer

LEE, Jin Ick

Telephone No. 82-42-481-5770

INTERNATIONAL SEARCH REPORT

Information on patent family members

International application No.
PCT/US2011/034356

Patent document cited in search report	Publication date	Patent family member(s)	Publication date
US 2005-0078916 A1	14.04.2005	US 7440647 B2	21.10.2008
US 2001-0009469 A1	26.07.2001	JP 03-681865 B2	10.08.2005
		JP 10-336154 A	18.12.1998
		JP 2005-222083 A	18.08.2005
		US 6236488 B1	22.05.2001
		US 6445478 B2	03.09.2002
US 05677779A A	14.10.1997	JP 08-018510 A	19.01.1996
US 2007-0131955 A1	14.06.2007	KR 10-0734868 B1	02.07.2007
		KR 10-0734868 B1	03.07.2007
		KR20070061621A	14.06.2007
		US 7373032 B2	13.05.2008
US 2005-0117904 A1	02.06.2005	KR 10-0618428 B1	31.08.2006
		WO 03-026165 A1	27.03.2003
US 2011-0217045 A1	08.09.2011	WO 2011-106871 A1	09.09.2011

PATENT COOPERATION TREATY

From the
INTERNATIONAL SEARCHING AUTHORITY

To:
ALAVI DAVID S.

2852 WILLAMETTE STREET #402 EUGENE OR 97405
USA

PCT

WRITTEN OPINION OF THE INTERNATIONAL SEARCHING AUTHORITY

(PCT Rule 43bis.1)

Date of mailing *(day/month/year)*	**22 DECEMBER 2011 (22.12.2011)**
Applicant's or agent's file reference XPNT66PCT	**FOR FURTHER ACTION** See paragraph 2 below

International application No.	International filing date *(day/month/year)*	Priority date *(day/month/year)*
PCT/US2011/034356	**28 APRIL 2011 (28.04.2011)**	28 APRIL 2010 (28.04.2010)

International Patent Classification (IPC) or both national classification and IPC

H04B 10/18(2006.01)i, H04B 10/02(2006.01)i, G02B 6/42(2006.01)i

Applicant

HOYA CORPORATION USA

1. This opinion contains indications relating to the following items:

- [x] Box No. I Basis of the opinion
- [ ] Box No. II Priority
- [ ] Box No. III Non-establishment of opinion with regard to novelty, inventive step and industrial applicability
- [x] Box No. IV Lack of unity of invention
- [x] Box No. V Reasoned statement under Rule 43bis.1(a)(i) with regard to novelty, inventive step or industrial applicability; citations and explanations supporting such statement
- [x] Box No. VI Certain documents cited
- [ ] Box No. VII Certain defects in the international application
- [ ] Box No. VIII Certain observations on the international application

2. **FURTHER ACTION**

If a demand for international preliminary examination is made, this opinion will be considered to be a written opinion of the International Preliminary Examining Authority ("IPEA") except that this does not apply where the applicant chooses an Authority other than this one to be the IPEA and the chosen IPEA has notified the International Bureau under Rule 66.1bis(b) that written opinions of this International Searching Authority will not be so considered.

If this opinion is, as provided above, considered to be a written opinion of the IPEA, the applicant is invited to submit to the IPEA a written reply together, where appropriate, with amendments, before the expiration of 3 months from the date of mailing of Form PCT/ISA/220 or before the expiration of 22 months from the priority date, whichever expires later.
For further options, see Form PCT/ISA/220.

Name and mailing address of the ISA/KR	Date of completion of this opinion	Authorized officer
Korean Intellectual Property Office Government Complex-Daejeon, 189 Cheongsa-ro, Seo-gu, Daejeon 302-701, Republic of Korea Facsimile No. 82-42-472-7140	22 DECEMBER 2011 (22.12.2011)	LEE, Jin Ick Telephone No.82-42-481-5770

WRITTEN OPINION OF THE INTERNATIONAL SEARCHING AUTHORITY

International application No.
PCT/US2011/034356

Box No. I Basis of this opinion

1. With regard to the **language**, this opinion has been established on the basis of :

   ☒ the international application in the language in which it was filed

   ☐ a translation of the international application into _____ , which is the language of a translation furnished for the purposes of international search (Rules 12.3(a) and 23.1(b))

2. ☐ This opinion has been established taking into account the **rectification of an obvious mistake** authorized by or notified to this Authority under Rule 91 (Rule 43*bis*.1(a))

3. With regard to any **nucleotide and/or amino acid sequence** disclosed in the international application, this opinion has been established on the basis of:

   a. a sequence listing filed or furnished
      ☐ on paper
      ☐ in electronic form

   b. time of filing or furnishing
      ☐ contained in the international application as filed.
      ☐ filed together with the international application in electronic form.
      ☐ furnished subsequently to this Authority for the purposes of search.

4. ☐ In addition, in the case that more than one version or copy of a sequence listing has been filed or furnished, the required statements that the information in the subsequent or additioanl copies is identical to that in the application as filed or does not go beyond the application as filed, as appropriate, were furnished.

5. Additional comments:

WRITTEN OPINION OF THE INTERNATIONAL SEARCHING AUTHORITY

International application No.
PCT/US2011/034356

Box No. IV Lack of unity of invention

1. ☒ In response to the invitation (Form PCT/ISA/206) to pay additional fees the applicant has, within the applicable time limit:

   ☐ paid additional fees

   ☐ paid additional fees under protest and, where applicable, the protest fee

   ☐ paid additional fees under protest but the applicable protest fee was not paid

   ☒ not paid additional fees

2. ☐ This Authority found that the requirement of unity of invention is not complied with and chose not to invite the applicant to pay additional fees.

3. This Authority considers that the requirement of unity of invention in accordance with Rule 13.1, 13.2 and 13.3 is

   ☐ complied with

   ☒ not complied with for the following reasons:

The inventions listed as Groups I, II and III do not relate to a single general inventive concept under PCT Rule 13.1 because, under PCT Rule 13.2 they have common technical features that fall under the general knowledge of a person skilled in the art.

Thus there is no technical relationship left over the prior art among the claimed inventions, leaving the claims without a single general inventive concept.
Hence there is lack of unity "a posteriori"(PCT Rules 13.1 and 13.2)

Group I:
Claims 1-45, drawn to a bidirectional optoelectronic device comprising a photodetector, a light source and a driver circuit.
Claims 46-91, drawn to a method using the bidirectional optoelectronic device.

Group II:
Claim 92, drawn to a multi-channel optoelectronic device comprising optoelectronic components and a protective encapsulant.
Claims 93-131, drawn to a bidirectional optoelectronic device comprising optoelectronic components and a protective encapsulant.

Group III:
Claims 132-151, drawn to an optical apparatus comprising waveguides, light collectors and light traps.
Claims 152-169, drawn to a method using the optical apparatus.

4. Consequently, this opinion has been established in respect of the following parts of the international application :

   ☐ all parts.

   ☒ the parts relating to claims Nos. 1-91

WRITTEN OPINION OF THE INTERNATIONAL SEARCHING AUTHORITY

International application No.
PCT/US2011/034356

Box No. V Reasoned statement under Rule 43bis.1(a)(i) with regard to novelty, inventive step or industrial applicability; citations and explanations supporting such statement

1. Statement

Novelty (N)	Claims	1-91	YES
	Claims	NONE	NO
Inventive step (IS)	Claims	1-91	YES
	Claims	NONE	NO
Industrial applicability (IA)	Claims	1-91	YES
	Claims	NONE	NO

2. Citations and explanations :

Reference is made to the following documents:

D1: US 2005-0078916 A1 (LUCY, G. HOSKING) 14 April 2005
D2: US 2001-0009469 A1 (KATSUHIRO SHIMIZU et al.) 26 July 2001
D3: US 05677779A A (ODA; GAN et al.) 14 October 1997
D4: US 2007-0131955 A1 (JEONG PARK et al.) 14 June 2007
D5: US 2005-0117904 A1 (YOUNGWAN CHOI et al.) 02 June 2005
D6: US 2011-0217045 A1 (WATSON CHRISTOPHER et al.) 08 September 2011

1) Novelty and Inventive step

(1) Independent claim 1

The features of claim 1, such as abidirectional optoelectronic device, comprise a photodetector, a light source and a drive circuit arranged to apply a first portion of the input electrical signal to the first electrical lead of the light source and to apply a second portion of the input electrical signal to the second lead of the light source, wherein the second portion of the input electrical signal is a scaled, inverted substantial replica of the first portion of the input electrical signal. The features of claim 1 are not disclosed in any of the documents D1 to D5 nor are they obvious to a person skilled in the art. Accordingly, claim 1 is considered to be novel and to involve an inventive step under PCT Articles 33(2)-(3).

(2) Dependent claims 2-45

The additional features of dependent claims 2-45 are not disclosed in any of the documents D1 to D5 nor are they obvious to a person skilled in the art. Accordingly, claims 2-45 are considered to be novel and to involve an inventive step under PCT Articles 33(2)-(3).

(4) claim 46

Claim 46 describes the same technical concept as claim 1 except in the category. The features of claim 46 are not disclosed in any of the documents D1 to D5, nor are they obvious to a person skilled in the art. Accordingly, claim 46 is considered to be novel and to involve an inventive step under PCT Articles 33(2)-(3).

(4) claims 47-91

The additional features of dependent claims 47-91 are not disclosed in any of the documents D1 to D5 nor are they obvious to a person skilled in the art. Accordingly,
Continued on Supplemental Box

WRITTEN OPINION OF THE INTERNATIONAL SEARCHING AUTHORITY

International application No.
PCT/US2011/034356

Box No. VI Certain documents cited

1. Certain published documents (Rule 43bis.1 and 70.10)

	Application No. Patent No.	Publication date *(day/month/year)*	Filing date *(day/month/year)*	Priority date (valid claim) *(day/month/year)*
E	US 12/715653	08/09/2011	02/03/2010	None

Application No. US 12/715653 (publication No. US 2011-0217045 A) does not conttitute prior art within the meaning of PCT Rule 64.3, but appears to disclose the features of claims 1 and 46.

2. Non-written disclosures (Rule 43bis.1 and 70.9)

Kind of non-written disclosure	Date of non-written disclosure *(day/month/year)*	Date of written disclosure referring to non-written disclosure *(day/month/year)*

WRITTEN OPINION OF THE
INTERNATIONAL SEARCHING AUTHORITY

International application No.
PCT/US2011/034356

Supplemental Box

In case **the space in any of the preceding boxes is not sufficient.**
Continuation of:

Box V

claims 47-91 are considered to be novel and to involve an inventive step under PCT Articles 33(2)-(3).

2) Industrial applicability

Claims 1-91 are industrially applicable under PCT Article 33(4).

CLAIMS

What is claimed is:

1. A bidirectional optoelectronic device comprising:
   (a) a photodetector arranged (i) to receive an input optical signal modulated to encode first transmitted information and (ii) to generate in response to the input optical signal an output electrical signal modulated to encode the first transmitted information;
   (b) a light source arranged (i) to receive an input electrical signal modulated to encode second transmitted information and (ii) to generate in response to the input electrical signal an output optical signal modulated to encode the second transmitted information, which light source has first and second electrical leads for receiving the input electrical signal; and
   (c) a drive circuit arranged to apply a first portion of the input electrical signal to the first electrical lead of the light source and to apply a second portion of the input electrical signal to the second lead of the light source, wherein the second portion of the input electrical signal is a scaled, inverted substantial replica of the first portion of the input electrical signal.

2. The device of Claim 1 wherein the light source comprises a laser diode, the first electrical lead comprises a cathode of the laser diode, and the second electrical lead comprises an anode of the laser diode.

3. The device of Claim 1 wherein the input electrical signal comprises one or more amplitude-modulated RF carrier signals or one or more baseband digital amplitude-modulated signals.

4. The device of Claim 1 wherein the output electrical signal comprises one or more amplitude-modulated RF carrier signals or one or more baseband digital amplitude-modulated signals.

5. The device of Claim 1 wherein the photodetector is coupled to a transimpedance amplifier.

6. The device of Claim 1 wherein the photodetector comprises a p-i-n photodiode or an avalanche photodiode.

7. The device of Claim 1 wherein a selected scale factor of the second portion of the input electrical signal relative to the first portion of the electrical signal results in a minimal cross-talk penalty exhibited by the photodetector.

8. The device of Claim 1 wherein a scale factor of the second portion of the input electrical signal relative to the first portion of the electrical signal is about unity.

9. The device of Claim 1 wherein the first and second portions of the input electrical signal differ from one another by an input electrical signal offset.

10. The device of Claim 1 wherein the input electrical signal is AC-coupled to the light source.

11. The device of Claim 1 wherein the input electrical signal is DC-coupled to the light source.

12. The device of Claim 1 further comprising a protective encapsulant arranged to encapsulate the photodetector and the light source, which encapsulant includes hollow dielectric microspheres dispersed within its volume so as to reduce a cross-talk penalty arising from unwanted electrical signals present in the encapsulant to a level below that exhibited by the bidirectional device without the microspheres in the encapsulant.

13. The device of Claim 12 wherein the encapsulant further includes an optical absorber dispersed within its volume so as to reduce a cross-talk penalty arising from unwanted optical signals present in the encapsulant to a level below that exhibited by the optoelectronic device without the optical absorber in the encapsulant.

14. The device of Claim 13 wherein the optical absorber is present in an amount so that an extinction coefficient κ of the encapsulant is between about 1 cm^{-1} and about 200 cm^{-1} over an operational wavelength range of the optoelectronic device.

15. The device of Claim 13 wherein the optical absorber comprises carbon particles dispersed in the encapsulant.

16. The device of Claim 15 wherein the encapsulant comprises between about 0.1% and about 2% by weight of carbon particles.

17. The device of Claim 12 or 13 wherein the dielectric microspheres are present in an amount so that a dielectric constant of the encapsulant is between about 1.7 and about 2.5.

18. The device of Claim 12 or 13 wherein the dielectric microspheres are present in an amount so that an average dielectric constant of the encapsulant with the microspheres is between about 25% and about 50% less than a dielectric constant of the encapsulant without the microspheres.

19. The device of Claim 12 or 13 wherein the encapsulant comprises between about 25% and about 50% by volume of the dielectric microspheres.

20. The device of Claim 12 or 13 wherein the dielectric microspheres have a median diameter between about 40 μm and about 70 μm.

21. The device of Claim 12 or 13 wherein the hollow dielectric microspheres comprise hollow silica microspheres.

22. The device of Claim 12 or 13 wherein the encapsulant comprises a silicone, epoxy, or polyurethane polymer.

23. The device of Claim 12 or 13 further comprising an optical encapsulant arranged to fill one or more segments of a free optical path within the optoelectronic device and to encapsulate a portion of the optoelectronic device beneath the protective encapsulant.

24. The device of Claim 1, 12, or 13 wherein the light source and the photodetector are positioned on a common substrate within about 2 mm of one another.

25. The device of Claim 1, 12, or 13 wherein the light source and the photodetector are positioned on a common substrate with edge dimensions less than about 10 mm.

26. The device of Claim 1, 12, or 13 wherein sensitivity of the photodetector, with the input electrical signal applied to the light source or the output optical signal emanating from the light source, is within about 3 dB of the sensitivity of the photodetector with no input electrical signal applied to the light source and no output optical signal emanating from the light source.

27. The device of Claim 1, 12, or 13 wherein the photodetector exhibits a cross-talk penalty less than about 3 dB.

28. The device of Claim 1, 12, or 13 further comprising:
a waveguide substrate;
a set of one or more optical waveguide layers on the substrate;
one or more optical waveguides formed in one or more of the optical waveguide layers, each of the optical waveguides being arranged to substantially confine in two transverse dimensions a corresponding guided optical mode, wherein the light source is positioned on the substrate or on one or more of the waveguide layers and is arranged to launch a first fraction of the output optical signal to propagate along one of the optical waveguides in the corresponding guided optical mode;
one or more light collectors formed in the optical waveguide layers, each light collector comprising one or more lateral surfaces of the optical waveguide layers and a substantially opaque coating on the lateral surfaces; and
one or more light traps formed in the optical waveguide layers, each light trap comprising one or more lateral surfaces of the optical waveguide layers and a substantially opaque coating on the lateral surfaces,
wherein:
the lateral surfaces of each light trap are arranged to define a corresponding spiral region of the optical waveguide layers, which region includes an open mouth and closed end of the light trap; and
the lateral surfaces of each light collector are arranged to redirect a corresponding portion of a second fraction of the output optical signal to propagate into the open mouth of one of the light traps, which second fraction of the optical signal propagates from the light source in one or

more of the optical waveguide layers without confinement by any of the optical waveguides in the corresponding guided optical modes.

29. The device of Claim 28 wherein the substrate comprises silicon or doped silicon, and each optical waveguide layer comprises silica, doped silica, silicon nitride, or silicon oxynitride.

30. The device of Claim 28 wherein the light source comprises a laser diode or a light emitting diode.

31. The device of Claim 28 wherein the lateral surfaces of the light collectors and light traps comprise etched edges of one or more of the optical waveguide layers.

32. The device of Claim 28 wherein the substantially opaque coatings of the lateral surfaces of the light collectors and light traps include a metal layer.

33. The device of Claim 32 wherein the metal layer is absorptive.

34. The device of Claim 32 wherein the metal layer is reflective.

35. The device of Claim 32 wherein the metal layer is absorptive, and the substantially opaque coating includes a reflection suppressing layer between the lateral surface and the metal layer.

36. The device of Claim 28 wherein the lateral surfaces of one or more of the light collectors is curved so as to redirect the corresponding portion of the second fraction of the optical signal that diverges from the light source to converge toward one of the light traps.

37. The device of Claim 36 wherein the curved lateral surface of the light collector approximates a portion of an ellipse, with one focus of the ellipse located at the light source and another focus of the ellipse located at the mouth of the corresponding light trap.

38. The device of Claim 28 wherein one or more of the light collectors comprise one or more substantially flat lateral surfaces and are arranged to redirect the

corresponding portion of the second fraction of the optical signal by two or more successive reflections from the flat lateral surfaces.

39. The device of Claim 28 wherein the optical waveguide that guides the first fraction of the optical signal includes a curved segment and is arranged before the curved segment to pass between a first one and a second one of the light collectors and is arranged after the curved segment to pass between the first light collector and the open mouth of the light trap, and the second light collector is arranged so as to substantially block substantially all straight-line propagation paths through the optical waveguide layers from the light source that lie between the first light collector and the mouth of the light trap.

40. The device of Claim 28 wherein the spiral region subtends an arc greater than about 180°.

41. The device of Claim 28 wherein at least a portion of the spiral region is a cornuate spiral region.

42. The device of Claim 28 wherein the light source and the photodetector are positioned on a common substrate within about 2 mm of one another.

43. The device of Claim 28 wherein the light source and the photodetector are positioned on a common substrate with edge dimensions less than about 10 mm.

44. The device of Claim 28 wherein sensitivity of the photodetector, with the input electrical signal applied to the light source or the output optical signal emanating from the light source, is within about 3 dB of the sensitivity of the photodetector with no input electrical signal applied to the light source and no output optical signal emanating from the light source.

45. The device of Claim 28 wherein the photodetector exhibits a cross-talk penalty less than about 3 dB.

46. A method comprising:
    (a) receiving at a photodetector an input optical signal modulated to encode first transmitted information and generating with the photodetector, in

response to the input optical signal, an output electrical signal modulated to encode the first transmitted information;

(b) receiving at a light source an input electrical signal modulated to encode second transmitted information and generating with the light source, in response to the input electrical signal, an output optical signal modulated to encode the second transmitted information, which light source has first and second electrical leads for receiving the input electrical signal; and

(c) applying with a drive circuit a first portion of the input electrical signal to the first electrical lead of the light source and applying with the drive circuit a second portion of the input electrical signal to the second lead of the light source, wherein the second portion of the input electrical signal is a scaled, inverted substantial replica of the first portion of the input electrical signal.

47. The method of Claim 46 wherein the light source comprises a laser diode, the first electrical lead comprises a cathode of the laser diode, and the second electrical lead comprises an anode of the laser diode.

48. The method of Claim 46 wherein the input electrical signal comprises one or more amplitude-modulated RF carrier signals or one or more baseband digital amplitude-modulated signals.

49. The method of Claim 46 wherein the output electrical signal comprises one or more amplitude-modulated RF carrier signals or one or more baseband digital amplitude-modulated signals.

50. The method of Claim 46 wherein the photodetector is coupled to a transimpedance amplifier.

51. The method of Claim 46 wherein the photodetector comprises a p-i-n photodiode or an avalanche photodiode.

52. The method of Claim 46 wherein a selected scale factor of the second portion of the input electrical signal relative to the first portion of the electrical signal results in a minimal cross-talk penalty exhibited by the photodetector.

53. The method of Claim 52 further comprising performing an optimization procedure to determine the selected scale factor.

54. The method of Claim 46 wherein a scale factor of the second portion of the input electrical signal relative to the first portion of the electrical signal is about unity.

55. The method of Claim 46 wherein the first and second portions of the input electrical signal differ from one another by an input electrical signal offset.

56. The method of Claim 46 wherein the input electrical signal is AC-coupled to the light source.

57. The method of Claim 46 wherein the input electrical signal is DC-coupled to the light source.

58. The method of 46 wherein a protective encapsulant is arranged to encapsulate the photodetector and the light source, which encapsulant includes hollow dielectric microspheres dispersed within its volume so as to reduce a cross-talk penalty arising from unwanted electrical signals present in the encapsulant to a level below that exhibited by the bidirectional device without the microspheres in the encapsulant.

59. The method of Claim 58 wherein the encapsulant further includes an optical absorber dispersed within its volume so as to reduce a cross-talk penalty arising from unwanted optical signals present in the encapsulant to a level below that exhibited by the optoelectronic device without the optical absorber in the encapsulant.

60. The method of Claim 59 wherein the optical absorber is present in an amount so that an extinction coefficient κ of the encapsulant is between about 1 cm^{-1} and about 200 cm^{-1} over an operational wavelength range of the optoelectronic device.

61. The method of Claim 59 wherein the optical absorber comprises carbon particles dispersed in the encapsulant.

62. The method of Claim 61 wherein the encapsulant comprises between about 0.1% and about 2% by weight of carbon particles.

63. The method of Claim 58 or 59 wherein the dielectric microspheres are present in an amount so that a dielectric constant of the encapsulant is between about 1.7 and about 2.5.

64. The method of Claim 58 or 59 wherein the dielectric microspheres are present in an amount so that an average dielectric constant of the encapsulant with the microspheres is between about 25% and about 50% less than a dielectric constant of the encapsulant without the microspheres.

65. The method of Claim 58 or 59 wherein the encapsulant comprises between about 25% and about 50% by volume of the dielectric microspheres.

66. The method of Claim 58 or 59 wherein the dielectric microspheres have a median diameter between about 40 μm and about 70 μm.

67. The method of Claim 58 or 59 wherein the hollow dielectric microspheres comprise hollow silica microspheres.

68. The method of Claim 58 or 59 wherein the encapsulant comprises a silicone, epoxy, or polyurethane polymer.

69. The method of Claim 58 or 59 further comprising an optical encapsulant arranged to fill one or more segments of a free optical path within the optoelectronic device and to encapsulate a portion of the optoelectronic device beneath the protective encapsulant.

70. The method of Claim 46, 58, or 59 wherein the light source and the photodetector are positioned on a common substrate within about 2 mm of one another.

71. The method of Claim 46, 58, or 59 wherein the light source and the photodetector are positioned on a common substrate with edge dimensions less than about 10 mm.

72. The method of Claim 46, 58, or 59 wherein sensitivity of the photodetector, with the input electrical signal applied to the light source or the output optical signal emanating from the light source, is within about 3 dB of the sensitivity of the photodetector with no input electrical signal applied to the light source and no output optical signal emanating from the light source.

73. The method of Claim 46, 58, or 59 wherein the photodetector exhibits a cross-talk penalty less than about 3 dB.

74. The method of Claim 46, 58, or 59 wherein:

one or more optical waveguides are formed in one or more optical waveguide layers on a waveguide substrate, each of the optical waveguides being arranged to substantially confine in two transverse dimensions a corresponding guided optical mode;

the light source is positioned on the substrate or on one or more of the waveguide layers and is arranged to launch a first fraction of the output optical signal to propagate along one of the optical waveguides in the corresponding guided optical mode;

one or more light collectors are formed in the optical waveguide layers, each light collector comprising one or more lateral surfaces of the optical waveguide layers and a substantially opaque coating on the lateral surfaces;

one or more light traps are formed in the optical waveguide layers, each light trap comprising one or more lateral surfaces of the optical waveguide layers and a substantially opaque coating on the lateral surfaces;

the lateral surfaces of each light trap are arranged to define a corresponding spiral region of the optical waveguide layers, which region includes an open mouth and closed end of the light trap; and

the lateral surfaces of each light collector are arranged to redirect a corresponding portion of a second fraction of the optical signal to propagate into the open mouth of one of the light traps, which second fraction of the optical signal propagates from the light source in one or more of the optical waveguide layers without confinement by any of the optical waveguides in the corresponding guided optical modes.

75. The method of Claim 74 wherein the substrate comprises silicon or doped silicon, and each optical waveguide layer comprises silica, doped silica, silicon nitride, or silicon oxynitride.

76. The method of Claim 74 wherein the light source comprises a laser diode or a light emitting diode.

77. The method of Claim 74 wherein the lateral surfaces of the light collectors and light traps comprise etched edges of one or more of the optical waveguide layers.

78. The method of Claim 74 wherein the substantially opaque coatings of the lateral surfaces of the light collectors and light traps include a metal layer.

79. The apparatus of Claim 78 wherein the metal layer is absorptive.

80. The apparatus of Claim 78 wherein the metal layer is reflective.

81. The apparatus of Claim 78 wherein the metal layer is absorptive, and the substantially opaque coating includes a reflection suppressing layer between the lateral surface and the metal layer.

82. The method of Claim 74 wherein the lateral surfaces of one or more of the light collectors is curved so as to redirect the corresponding portion of the second fraction of the optical signal that diverges from the light source to converge toward one of the light traps.

83. The apparatus of Claim 82 wherein the curved lateral surface of the light collector approximates a portion of an ellipse, with one focus of the ellipse located at the light source and another focus of the ellipse located at the mouth of the corresponding light trap.

84. The method of Claim 74 wherein one or more of the light collectors comprise one or more substantially flat lateral surfaces and are arranged to redirect the corresponding portion of the second fraction of the optical signal by two or more successive reflections from the flat lateral surfaces.

85. The method of Claim 74 wherein the optical waveguide that guides the first fraction of the optical signal includes a curved segment and is arranged before the curved segment to pass between a first one and a second one of the light collectors and is arranged after the curved segment to pass between the first light collector and the open mouth of the light trap, and the second light collector is arranged so as to substantially block substantially all straight-line propagation paths through the optical waveguide layers from the light source that lie between the first light collector and the mouth of the light trap.

86. The method of Claim 74 wherein the spiral region subtends an arc greater than about 180°.

87. The method of Claim 74 wherein at least a portion of the spiral region is a cornuate spiral region.

88. The method of Claim 74 wherein the light source and the photodetector are positioned on a common substrate within about 2 mm of one another.

89. The method of Claim 74 wherein the light source and the photodetector are positioned on a common substrate with edge dimensions less than about 10 mm.

90. The method of Claim 74 wherein sensitivity of the photodetector, with the input electrical signal applied to the light source or the output optical signal emanating from the light source, is within about 3 dB of the sensitivity of the photodetector with no input electrical signal applied to the light source and no output optical signal emanating from the light source.

91. The method of Claim 74 wherein the photodetector exhibits a cross-talk penalty less than about 3 dB.

92. A multi-channel optoelectronic device comprising:
two or more optoelectronic components; and
a protective encapsulant arranged to encapsulate the optoelectronic components,
wherein:

UNITED STATES PATENT AND TRADEMARK OFFICE

Commissioner for Patents
United States Patent and Trademark Office
P.O. Box 1450
Alexandria, VA 22313-1450
www.uspto.gov

Decision Date : February 13, 2012

In re Application of :

Wei Kao

Application No : 13096750

Filed : 28-Apr-2011

Attorney Docket No : TRUC-023/01US 309245-2103

DECISION ON REQUEST TO WITHDRAW AS ATTORNEY/AGENTOF RECORD

This is an electronic decision on the Request to Withdraw as attorney or agent of record under 37 CFR § 1.36(b), filed February 13, 2012

The request is **APPROVED.**

The request was signed by William S. Galliani (registration no. 33885) on behalf of all attorneys/agents associated with Customer Number 58249 . All attorneys/agents associated with Cusotmer Number 58249 have been withdrawn.

Since there are no remaining attorneys of record, all future communications from the Office will be directed to the first named inventor or assignee that has properly made itself of record pursuant to 37 CFR 3.71, with correspondence address:

Name	The Regents of the University of California
Name2	
Address 1	1111 Franklin Street
Address 2	
City	Oakland
State	CA
Postal Code	94607-5200
Country	US

As a reminder, requester is required to inform the first named inventor or assignee that has properly made itself of record pursuant to 37 CFR 3.71 of the electronically processed petition.

Telephone inquiries concerning this decision should be directed to the Patent Electronic Business Center (EBC) at 866-217-9197.

Office of Petitions

Doc Code: PET.AUTO **Document Description: Petition automatically granted by EFS-Web**	PTO/SB/83 U.S. Patent and Trademark Office Department of Commerce

Electronic Petition Request	**REQUEST FOR WITHDRAWAL AS ATTORNEY OR AGENT AND CHANGE OF CORRESPONDENCE ADDRESS**
Application Number	13096750
Filing Date	28-Apr-2011
First Named Inventor	Wei Kao
Art Unit	1787
Examiner Name	KENNETH STACHEL
Attorney Docket Number	TRUC-023/01US 309245-2103
Title	APPLICATION OF HIGH TOUGHNESS, LOW VISCOSITY NANO-MOLECULAR RESIN FOR REINFORCING POTHOLE PATCHING MATERIALS IN ASPHALT AND CONCRETE BASE PAVEMENT

◉ Please withdraw me as attorney or agent for the above identified patent application and the practitioners of record associated with Customer Number: 58249

The reason(s) for this request are those described in 37 CFR:

10.40(b)(4)

Certifications

☒ I/We have given reasonable notice to the client, prior to the expiration of the response period, that the practitioner(s) intend to withdraw from employment

☒ I/We have delivered to the client or a duly authorized representative of the client all papers and property (including funds) to which the client is entitled

☒ I/We have notified the client of any responses that may be due and the time frame within which the client must respond

Change the correspondence address and direct all future correspondence to the first named inventor or assignee that has properly made itself of record pursuant to 37 CFR 3.71:

Name	The Regents of the University of California
Address	1111 Franklin Street
City	Oakland
State	CA
Postal Code	94607-5200
Country	US

I am authorized to sign on behalf of myself and all withdrawing practitioners.	
Signature	/William S. Galliani/
Name	William S. Galliani
Registration Number	33885

UNITED STATES PATENT AND TRADEMARK OFFICE

Commissioner for Patents
United States Patent and Trademark Office
P.O. Box 1450
Alexandria, VA 22313-1450
www.uspto.gov

Beyer Law Group LLP
P.O. BOX 1687
Cupertino CA 95015-1687

MAILED
DEC 06 2011
OFFICE OF PETITIONS

In re Application of :
Donald H. Graham III et al. :
Application No. 13/096,764 : DECISION ON PETITION
Filed: April 28, 2011 : TO MAKE SPECIAL UNDER
Attorney Docket No. **TOBSP001A** : 37 CFR 1.102(c)(1)
:

This is a decision on the petition under 37 CFR 1.102(c)(1), filed November 23, 2011, to make the above-identified application special based on applicant's age as set forth in MPEP § 708.02, Section IV.

The petition is **GRANTED**.

A grantable petition to make an application special under 37 CFR 1.102(c)(1) and MPEP § 708.02, Section IV: Applicant's Age must be accompanied by evidence showing that at least one of the applicants is 65 years of age, or more, such as a birth certificate or a statement by applicant. No fee is required

The instant petition includes a statement by a registered attorney. Accordingly, the above-identified application has been accorded "special" status.

Telephone inquiries concerning this decision should be directed to JoAnne Burke at 571-272-4584.

All other inquiries concerning either the examination or status of the application should be directed to the Technology Center.

The application is being forwarded to Technology Center AU 3621 for action on the merits commensurate with this decision.

/JoAnne Burke/
JoAnne Burke
Petitions Examiner
Office of Petitions

IN THE UNITED STATES PATENT AND TRADEMARK OFFICE

Applicants:	Louis Lerman, Allan Brent York, Michael David Henry, Robert Steele, Brian D. Ogonowsky		
Assignee:	Quarkstar, LLC		
Title:	Solid State Light Sheet or Strip Having Cavities Formed in Bottom Substrate		
Serial No.:	Filed herewith	Filing Date:	April 27, 2011
Examiner:	Not yet assigned	Group Art Unit:	Not yet assigned
Docket No.:	PTE-P-101-3P-4C	Confirmation No.:	

San Jose, California
April 28, 2011

Mail Stop Petition
Commissioner for Patents
P.O. Box 1450
Alexandria, VA 23313-1450

PETITION TO MAKE SPECIAL UNDER GREEN TECHNOLOGY PILOT PROGRAM

Dear Commissioner:

A completed form PTO/SB/420 is enclosed herewith requesting that the above-identified application be accepted for the Green Technology Pilot Program for accelerated examination. The below statement provides the additional information requested to qualify for the Program.

The application is a regular utility application filed under 35 USC 111(a).

The application contains three or fewer independent claims and 20 or fewer total claims. The application contains no multiple dependent claims.

Applicants request early publication under 37 CFR 1.219, and the publication fee accompanies this request.

PATENT LAW GROUP LLP
2635 N. FIRST ST.
SUITE 223
SAN JOSE, CA 95134
(408) 382-0480
FAX (408) 382-0481

The patent application relates to a solid state light sheet or strip, containing many LEDs in series, that may be used to replace the standard 2x4 foot fluorescent fixtures found

in almost every office building or replace incandescent bulbs. The yearly market for such conventional lamps in the United States is billions of units. The inventors have invented the first practical light sheet or strip that is cost-effective enough to be a viable replacement for the standard 2x4 foot fluorescent fixtures or incandescent bulbs. The increased energy efficiency of the light sheets/strips is part of the cost-effectiveness calculation. Furthermore, fluorescent lamps contain mercury, which requires special disposal procedures that add to the energy costs. As described below, the total energy savings by companies in America using the light sheet are extremely high.

LED lighting has the potential to dramatically reduce energy consumption in the United States due to its much higher efficiency with respect to conventional light sources such as incandescent, halogen and fluorescent lamps. A study commissioned by DOE in 2009 (Navigant Consulting, February 2010) estimated that demand for fluorescent lighting in commercial applications in 2010 is approximately 22,000 teralumen-hours (2.2×10^{16} lumen-hours), with projected growth to approximately 25,000 teralumen-hours in 2020. Average fluorescent lamp efficacy is estimated by the study at 71 lm/W in 2010, increasing to 75 lm/W in 2020. Assuming an average troffer efficiency of 75% (ranges from 65% in the DOE CALiPER test noted above to 85% for high-efficiency T5 troffers), the average efficacy for fluorescent troffers would be 53 lm/W in 2010 and 56 lm/W in 2020. Based on DOE estimates of efficacy improvements in white LEDs between 2010 and 2020, the luminous efficacy of the LED lightsheet should reach113 lm/W by 2015, and 153 lm/W by 2020.

Assuming a projected demand for commercial fluorescent-type lighting of 25,000 teralumen-hours in 2020, a market penetration of 20% of the installed base of fluorescent troffers by LED light sheets in that year would result in a reduction of electricity demand of 52 terawatt-hours per year. This is the amount of electricity produced annually by eight 1,000-MW power plants. The reduction in primary energy (coal, oil, gas, etc.) consumption would be 0.56 quads (0.56×10^{15} Btu) in 2020.

The claims, all directed to LED lighting devices, are broader than a solid light sheet that can be used to replace a 2x4 troffer, and the claimed structures/methods can be used to replace virtually any non-solid state light while being more efficient.

PATENT LAW
GROUP LLP
2635 N. FIRST ST.
SUITE 223
SAN JOSE, CA 95134
(408) 382-0480
FAX (408) 382-0481

If there are any questions, please call the undersigned at (408) 382-0480 ex202.

Certificate of Electronic Transmission	
I hereby certify that this correspondence is being submitted electronically to the United States Patent and Trademark Office on the date shown below.	
/Brian D Ogonowsky/	April 28, 2011
Attorney for Applicant(s)	Date

Respectfully submitted,

/Brian D Ogonowsky/

Brian D Ogonowsky
Attorney for Applicant(s)
Reg. No. 31,988

PATENT LAW GROUP LLP
2635 N. FIRST ST.
SUITE 223
SAN JOSE, CA 95134
(408) 382-0480
FAX (408) 382-0481

Doc Code: PET.GREEN
Document Description: Petition for Green Tech Pilot

PTO/SB/420 (11-10)
Approved for use through 01/31/2011. OMB 0651-0062
U.S. Patent and Trademark Office; U. S. DEPARTMENT OF COMMERCE
Under the Paperwork Reduction Act of 1995, no persons are required to respond to a collection of information unless it displays a valid OMB control number.

PETITION TO MAKE SPECIAL UNDER THE GREEN TECHNOLOGY PILOT PROGRAM

Attorney Docket Number: PTE-P-101-3P-4C	Application Number (if known):	Filing date: April 28, 2011
First Named Inventor: Louis Lerman		
Title: Solid State Light Sheet or Strip Having Cavities Formed in Bottom Substrate		

APPLICANT HEREBY REQUESTS TO PARTICIPATE IN THE GREEN TECHNOLOGY PILOT PROGRAM FOR THE ABOVE-IDENTIFIED APPLICATION. See Instruction Sheet on page 2.

This petition must be timely filed electronically using the USPTO electronic filing system, EFS-Web.

1. By filing this petition:

   Applicant is requesting early publication: Applicant hereby requests early publication under 37 CFR 1.219 and the publication fee set forth in 37 CFR 1.18(d) accompanies this request.

2. By filing this petition: applicant is agreeing to make an election without traverse in a telephonic interview and elect an invention that meets the eligibility requirements for the Green Technology Pilot Program, if the Office determines that the claims are not obviously directed to a single invention. See Instruction Sheet.

3. This request is accompanied by statements of special status for the eligibility requirement.

4. The application contains no more than three (3) independent claims and twenty (20) total claims.

5. The application does not contain any multiple dependent claims.

6. Other attachments: Description of why invention qualifies under program by conserving energy

Signature /Brian D Ogonowsky/	Date April 28, 2011
Name (Print/Typed) Brian D. Ogonowsky	Registration Number 31,988

Note: *Signatures of all the inventors or assignees of record of the entire interest or their representative(s) are required in accordance with 37 CFR 1.33 and 11.18. Please see 37 CFR 1.4(d) for the form of the signature. If necessary, submit multiple forms for more than one signature see below*.*

☒ *Total of 1 forms are submitted.

The information is required to obtain or retain a benefit by the public which is to file (and by the USPTO to process) an application. Confidentiality is governed by 35 U.S.C. 122 and 37 CFR 1.11 and 1.14. This collection is estimated to take 12 hours to complete, including gathering, preparing, and submitting the completed application form to the USPTO. Time will vary depending upon the individual case. Any comments on the amount of time you require to complete this form and/or suggestions for reducing this burden, should be sent to the Chief Information Officer, U.S. Patent and Trademark Office, U.S. Department of Commerce, P.O. Box 1450, Alexandria, VA 22313-1450. DO NOT SEND FEES OR COMPLETED FORMS TO THIS ADDRESS. **SEND TO: Commissioner for Patents, P.O. Box 1450, Alexandria, VA 22313-1450.**

If you need assistance in completing the form, call 1-800-PTO-9199 and select option 2.

UNITED STATES PATENT AND TRADEMARK OFFICE

UNITED STATES DEPARTMENT OF COMMERCE
United States Patent and Trademark Office
Address: COMMISSIONER FOR PATENTS
P.O. Box 1450
Alexandria, Virginia 22313-1450
www.uspto.gov

APPLICATION NO.	FILING DATE	FIRST NAMED INVENTOR	ATTORNEY DOCKET NO.	CONFIRMATION NO.
13/096,814	04/28/2011	Louis Lerman	PTE-P-101-3P-4C	5331

32566 7590 05/25/2011

PATENT LAW GROUP LLP
2635 NORTH FIRST STREET
SUITE 223
SAN JOSE, CA 95134

EXAMINER	
ART UNIT	PAPER NUMBER
2811	

MAIL DATE	DELIVERY MODE
05/25/2011	PAPER

Please find below and/or attached an Office communication concerning this application or proceeding.

The time period for reply, if any, is set in the attached communication.

UNITED STATES PATENT AND TRADEMARK OFFICE

Commissioner for Patents
United States Patent and Trademark Office
P.O. Box 1450
Alexandria, VA 22313-1450
www.uspto.gov

PATENT LAW GROUP LLP
2635 NORTH FIRST STREET
SUITE 223
SAN JOSE CA 95134

In re Application of	:	
LERMAN et al.	:	DECISION ON PETITION
Application No. 13/096,814	:	TO MAKE SPECIAL UNDER
Filed: April 28, 2011	:	THE GREEN TECHNOLOGY
Attorney Docket No. PTE-P-101-3P-4C	:	PILOT PROGRAM

This is a decision on the petition under 37 CFR 1.102, filed on April 28, 2011, to make the above-identified application special under the pilot program for applications pertaining to Green Technologies as set forth 74 Federal Register Notice 64666 (December 8, 2009) and amended by 75 Federal Register Notice 28554 (May 21, 2010) and 75 Federal Register Notice 69049 (November 10, 2010).

The petition is **GRANTED**.

A grantable petition to make an application special under 37 CFR 1.102 and the pilot program as set forth in 74 FR 64666 must be directed to a nonprovisional application filed under 35 USC 111(a) or be a national stage entry under 35 USC 371, exclusive of any reissue applications.

In order to qualify for special status, the following requirements must be met. 1) The application must have no more than 3 independent claims and no more than 20 total claims. 2) The application must not contain any multiple dependent claims. 3) The petition must state the basis for seeking special status, i.e., the claimed invention either: A) materially enhances the quality of the environment or B) materially contributes to: i) the discovery or development of renewable energy resources, ii) the more efficient utilization and conservation of energy resources, or iii) greenhouse gas emission reduction. 4) If the disclosure is not clear on its face that the claimed invention materially contributes under category (A) or (B), the petition must be accompanied by a statement by the applicant, assignee, or an attorney/agent registered to practice before the Office explaining how the materiality standard is met. 5) A statement that applicant will agree to make an election without traverse in a telephonic interview if a restriction requirement is made by the examiner. 6) The petition to make special must be filed electronically. 7) The petition must be filed at least one day prior to the date that a first Office Action appears in the Patent Application Information Retrieval (PAIR) system. 8) The petition must be accompanied by a request for early publication in compliance with 37 CFR 1.219 and include the publication fee as set forth in 37 CFR 1.18(d).

The requirement for a fee for consideration of the petition to make special for applications pertaining to Green Technologies has been waived.

The instant petition complies with items 1 – 8 above. Accordingly, the above-identified application has been accorded "special" status.

Telephone inquires concerning this decision should be directed to Lee W. Young at 571-272-4549.

The application is being forwarded to the Technology Center Art Unit 2811 for action on the merits commensurate with this decision.

Lee W. Young
Quality Assurance Specialist
Technology Center 2800

UNITED STATES PATENT AND TRADEMARK OFFICE

UNITED STATES DEPARTMENT OF COMMERCE
United States Patent and Trademark Office
Address: COMMISSIONER FOR PATENTS
P.O. Box 1450
Alexandria, Virginia 22313-1450
www.uspto.gov

APPLICATION NO.	FILING DATE	FIRST NAMED INVENTOR	ATTORNEY DOCKET NO.	CONFIRMATION NO.
13/096,829	04/28/2011	Kazuhiko Tsuji	SUTOSH.848AUS	5352

7590 12/21/2011

KNOBBE MARTENS OLSON & BEAR LLP
2040 MAIN STREET
FOURTEENTH FLOOR
IRVINE, CA 92614

EXAMINER	
FUREMAN, JARED	

ART UNIT	PAPER NUMBER
2836	

NOTIFICATION DATE	DELIVERY MODE
12/21/2011	ELECTRONIC

DECISION GRANTING PETITION UNDER 37 CFR 1.138(d)

The declaration of express abandonment is recognized

This is in response to the petition under 37 CFR 1.138(d), requesting for a refund of any previously paid search fee and excess claims fee in the above-identified application.

The petition is granted.

The express abandonment is recognized. Any previously paid search fee and excess claims fee are hereby refunded.

Telephone inquiries should be directed to the Office of Data Management at (571) 272-4200.

Betty Powell

Patent Publication Branch
Office of Data Management

UNITED STATES PATENT AND TRADEMARK OFFICE

Commissioner for Patents
United States Patent and Trademark Office
P.O. Box 1450
Alexandria, VA 22313-1450
www.uspto.gov

TOLER LAW GROUP
TOLER LAW GROUP
8500 BLUFFSTONE COVE
SUITE A201
AUSTIN TX 78759

MAILED

JUN 02 2011

OFFICE OF PETITIONS

In re Application of :
Zalenski, Papp, Cooney, Milota, and Mostowfi :
Application No. 13/096,834 : ON PETITION
Filed: April 28, 2011 :
Attorney Docket No. **1970-0005-C1** :
For: **MULTIPLE PROTOCOL COMMUNICATIONS**

This is in response to the petition under 37 CFR 1.47(b), filed April 28, 2011.

In accordance with 37 CFR 1.63(d)(3), applicants have submitted a copy of the executed declaration submitted in Application No. 10/613,656, filed July 3, 2003, of which the present filing is a continuation application. Applicants have provided a copy of the decision granting the petition under 37 CFR 1.47(a) in the prior application.

As Rule 1.47(a) status was granted in the prior application, this application is hereby accorded Rule 1.47(a) status. As no petition is necessary to accord Rule 1.47(a) status in this application, the petition is **dismissed as moot.** No petition fee is necessary.

Pursuant to 37 CFR 1.47(c), the Office is dispensing with the notice provision in the present application because notice was provided after the grant of Rule 1.47(a) status in the prior application.

The matter is being referred to the Office of Patent Application Processing for further review.

Telephone inquiries regarding this decision should be directed to the undersigned at (571) 272-3222.

/Kenya A. McLaughlin/

Kenya McLaughlin
Petitions Attorney
Office of Petitions

Doc Code: PET.GREEN
Document Description: Petition for Green Tech Pilot

PTO/SB/420 (11-10)
Approved for use through 01/31/2011. OMB 0651-0062
U.S. Patent and Trademark Office; U. S. DEPARTMENT OF COMMERCE
Under the Paperwork Reduction Act of 1995, no persons are required to respond to a collection of information unless it displays a valid OMB control number.

PETITION TO MAKE SPECIAL UNDER THE GREEN TECHNOLOGY PILOT PROGRAM

Attorney Docket Number: PTE-P-101-3P-11C	Application Number (if known):	Filing date: April 28, 2011
First Named Inventor: Louis Lerman		
Title: Solid State Light Strips Containing LED Dies in Series		

APPLICANT HEREBY REQUESTS TO PARTICIPATE IN THE GREEN TECHNOLOGY PILOT PROGRAM FOR THE ABOVE-IDENTIFIED APPLICATION. See Instruction Sheet on page 2.

This petition must be timely filed electronically using the USPTO electronic filing system, EFS-Web.

1. By filing this petition:

   Applicant is requesting early publication: Applicant hereby requests early publication under 37 CFR 1.219 and the publication fee set forth in 37 CFR 1.18(d) accompanies this request.

2. By filing this petition: applicant is agreeing to make an election without traverse in a telephonic interview and elect an invention that meets the eligibility requirements for the Green Technology Pilot Program, if the Office determines that the claims are not obviously directed to a single invention. See Instruction Sheet.

3. This request is accompanied by statements of special status for the eligibility requirement.

4. The application contains no more than three (3) independent claims and twenty (20) total claims.

5. The application does not contain any multiple dependent claims.

6. Other attachments: Description of why invention qualifies under program by conserving energy

Signature /Brian D Ogonowsky/	Date April 28, 2011
Name (Print/Typed) Brian D. Ogonowsky	Registration Number 31,988

Note: *Signatures of all the inventors or assignees of record of the entire interest or their representative(s) are required in accordance with 37 CFR 1.33 and 11.18. Please see 37 CFR 1.4(d) for the form of the signature. If necessary, submit multiple forms for more than one signature see below*.*

☒ *Total of 1 forms are submitted.

The information is required to obtain or retain a benefit by the public which is to file (and by the USPTO to process) an application. Confidentiality is governed by 35 U.S.C. 122 and 37 CFR 1.11 and 1.14. This collection is estimated to take 12 hours to complete, including gathering, preparing, and submitting the completed application form to the USPTO. Time will vary depending upon the individual case. Any comments on the amount of time you require to complete this form and/or suggestions for reducing this burden, should be sent to the Chief Information Officer, U.S. Patent and Trademark Office, U.S. Department of Commerce, P.O. Box 1450, Alexandria, VA 22313-1450. DO NOT SEND FEES OR COMPLETED FORMS TO THIS ADDRESS. **SEND TO: Commissioner for Patents, P.O. Box 1450, Alexandria, VA 22313-1450.**

If you need assistance in completing the form, call 1-800-PTO-9199 and select option 2.

IN THE UNITED STATES PATENT AND TRADEMARK OFFICE

Applicants:	Louis Lerman, Allan Brent York, Michael David Henry, Robert Steele, Brian D. Ogonowsky		
Assignee:	Quarkstar, LLC		
Title:	Solid State Light Strips Containing LED Dies in Series		
Serial No.:	Filed herewith	Filing Date:	April 27, 2011
Examiner:	Not yet assigned	Group Art Unit:	Not yet assigned
Docket No.:	PTE-P-101-3P-11C	Confirmation No.:	

San Jose, California
April 28, 2011

Mail Stop Petition
Commissioner for Patents
P.O. Box 1450
Alexandria, VA 23313-1450

PETITION TO MAKE SPECIAL UNDER GREEN TECHNOLOGY PILOT PROGRAM

Dear Commissioner:

A completed form PTO/SB/420 is enclosed herewith requesting that the above-identified application be accepted for the Green Technology Pilot Program for accelerated examination. The below statement provides the additional information requested to qualify for the Program.

The application is a regular utility application filed under 35 USC 111(a).

The application contains three or fewer independent claims and 20 or fewer total claims. The application contains no multiple dependent claims.

Applicants request early publication under 37 CFR 1.219, and the publication fee accompanies this request.

PATENT LAW GROUP LLP
2635 N. FIRST ST.
SUITE 223
SAN JOSE, CA 95134
(408) 382-0480
FAX (408) 382-0481

The patent application relates to a solid state light sheet or strip, containing many LEDs in series, that may be used to replace the standard 2x4 foot fluorescent fixtures found

in almost every office building or replace incandescent bulbs. The yearly market for such conventional lamps in the United States is billions of units. The inventors have invented the first practical light sheet or strip that is cost-effective enough to be a viable replacement for the standard 2x4 foot fluorescent fixtures or incandescent bulbs. The increased energy efficiency of the light sheets/strips is part of the cost-effectiveness calculation. Furthermore, fluorescent lamps contain mercury, which requires special disposal procedures that add to the energy costs. As described below, the total energy savings by companies in America using the light sheet are extremely high.

LED lighting has the potential to dramatically reduce energy consumption in the United States due to its much higher efficiency with respect to conventional light sources such as incandescent, halogen and fluorescent lamps. A study commissioned by DOE in 2009 (Navigant Consulting, February 2010) estimated that demand for fluorescent lighting in commercial applications in 2010 is approximately 22,000 teralumen-hours (2.2×10^{16} lumen-hours), with projected growth to approximately 25,000 teralumen-hours in 2020. Average fluorescent lamp efficacy is estimated by the study at 71 lm/W in 2010, increasing to 75 lm/W in 2020. Assuming an average troffer efficiency of 75% (ranges from 65% in the DOE CALiPER test noted above to 85% for high-efficiency T5 troffers), the average efficacy for fluorescent troffers would be 53 lm/W in 2010 and 56 lm/W in 2020. Based on DOE estimates of efficacy improvements in white LEDs between 2010 and 2020, the luminous efficacy of the LED lightsheet should reach113 lm/W by 2015, and 153 lm/W by 2020.

Assuming a projected demand for commercial fluorescent-type lighting of 25,000 teralumen-hours in 2020, a market penetration of 20% of the installed base of fluorescent troffers by LED light sheets in that year would result in a reduction of electricity demand of 52 terawatt-hours per year. This is the amount of electricity produced annually by eight 1,000-MW power plants. The reduction in primary energy (coal, oil, gas, etc.) consumption would be 0.56 quads (0.56×10^{15} Btu) in 2020.

The claims, all directed to LED lighting devices, are broader than a solid light sheet that can be used to replace a 2x4 troffer, and the claimed structures/methods can be used to replace virtually any non-solid state light while being more efficient.

PATENT LAW
GROUP LLP
2635 N. FIRST ST.
SUITE 223
SAN JOSE, CA 95134
(408) 382-0480
FAX (408) 382-0481

If there are any questions, please call the undersigned at (408) 382-0480 ex202.

Certificate of Electronic Transmission	
I hereby certify that this correspondence is being submitted electronically to the United States Patent and Trademark Office on the date shown below.	
/Brian D Ogonowsky/	April 28, 2011
Attorney for Applicant(s)	Date

Respectfully submitted,

/Brian D Ogonowsky/

Brian D Ogonowsky
Attorney for Applicant(s)
Reg. No. 31,988

PATENT LAW GROUP LLP
2635 N. FIRST ST.
SUITE 223
SAN JOSE, CA 95134
(408) 382-0480
FAX (408) 382-0481

UNITED STATES PATENT AND TRADEMARK OFFICE

UNITED STATES DEPARTMENT OF COMMERCE
United States Patent and Trademark Office
Address: COMMISSIONER FOR PATENTS
P.O. Box 1450
Alexandria, Virginia 22313-1450
www.uspto.gov

APPLICATION NO.	FILING DATE	FIRST NAMED INVENTOR	ATTORNEY DOCKET NO.	CONFIRMATION NO.
13/096,846	04/28/2011	Louis Lerman	PTE-P-101-3P-11C	5384

32566 7590 05/25/2011

PATENT LAW GROUP LLP
2635 NORTH FIRST STREET
SUITE 223
SAN JOSE, CA 95134

EXAMINER	
ART UNIT	PAPER NUMBER
2811	

MAIL DATE	DELIVERY MODE
05/25/2011	PAPER

Please find below and/or attached an Office communication concerning this application or proceeding.

The time period for reply, if any, is set in the attached communication.

UNITED STATES PATENT AND TRADEMARK OFFICE

Commissioner for Patents
United States Patent and Trademark Office
P.O. Box 1450
Alexandria, VA 22313-1450
www.uspto.gov

PATENT LAW GROUP LLP
2635 NORTH FIRST STREET
SUITE 223
SAN JOSE CA 95134

In re Application of	:	
LERMAN et al.	:	DECISION ON PETITION
Application No. 13/096,846	:	TO MAKE SPECIAL UNDER
Filed: April 28, 2011	:	THE GREEN TECHNOLOGY
Attorney Docket No. PTE-P-101-3P-11C	:	PILOT PROGRAM

This is a decision on the petition under 37 CFR 1.102, filed on April 28, 2011, to make the above-identified application special under the pilot program for applications pertaining to Green Technologies as set forth 74 Federal Register Notice 64666 (December 8, 2009) and amended by 75 Federal Register Notice 28554 (May 21, 2010) and 75 Federal Register Notice 69049 (November 10, 2010).

The petition is **GRANTED**.

A grantable petition to make an application special under 37 CFR 1.102 and the pilot program as set forth in 74 FR 64666 must be directed to a nonprovisional application filed under 35 USC 111(a) or be a national stage entry under 35 USC 371, exclusive of any reissue applications.

In order to qualify for special status, the following requirements must be met. 1) The application must have no more than 3 independent claims and no more than 20 total claims. 2) The application must not contain any multiple dependent claims. 3) The petition must state the basis for seeking special status, i.e., the claimed invention either: A) materially enhances the quality of the environment or B) materially contributes to: i) the discovery or development of renewable energy resources, ii) the more efficient utilization and conservation of energy resources, or iii) greenhouse gas emission reduction. 4) If the disclosure is not clear on its face that the claimed invention materially contributes under category (A) or (B), the petition must be accompanied by a statement by the applicant, assignee, or an attorney/agent registered to practice before the Office explaining how the materiality standard is met. 5) A statement that applicant will agree to make an election without traverse in a telephonic interview if a restriction requirement is made by the examiner. 6) The petition to make special must be filed electronically. 7) The petition must be filed at least one day prior to the date that a first Office Action appears in the Patent Application Information Retrieval (PAIR) system. 8) The petition must be accompanied by a request for early publication in compliance with 37 CFR 1.219 and include the publication fee as set forth in 37 CFR 1.18(d).

The requirement for a fee for consideration of the petition to make special for applications pertaining to Green Technologies has been waived.

The instant petition complies with items 1 – 8 above. Accordingly, the above-identified application has been accorded "special" status.

Telephone inquires concerning this decision should be directed to Lee W. Young at 571-272-4549.

The application is being forwarded to the Technology Center Art Unit 2811 for action on the merits commensurate with this decision.

Lee W. Young
Quality Assurance Specialist
Technology Center 2800

UNITED STATES PATENT AND TRADEMARK OFFICE

Commissioner for Patents
United States Patent and Trademark Office
P.O. Box 1450
Alexandria, VA 22313-1450
www.uspto.gov

BEYER LAW GROUP LLP
P.O. BOX 1687
CUPERTINO, CA 95015-1687

MAILED
DEC 15 2011
OFFICE OF PETITIONS

In re Application of :
Donald H. GRAHAM, III et al. :
Application No. 13/096,858 : DECISION ON PETITION
Filed : April 28, 2011 :
Attorney Docket No.: TOBSP001B :

This is in response to the petition under 37 CFR 1.102(c)(1) filed November 23, 2011, to make the above-identified application special based on applicant's age as set forth in M.P.E.P. § 708.02, Section IV.

The petition is **GRANTED.**

A grantable petition to make an application special under 37 CFR 1.102(c)(1) and MPEP § 708.02, Section IV: Applicant's Age must be accompanied by evidence showing that at least one of the applicants is 65 years of age, or more, such as a birth certificate or a statement by applicant. Applicant may also submit a statement from a registered practitioner that he or she has evidence that the applicant is 65 years of age or older. No fee is required.

The instant petition includes a statement from David P. Olynick an attorney or agent registered to practice before the Patent and Trademark Office certifying that he is in possession of and will retain evidence that applicant Donald H. Graham, III is 65 years of age or older as required under MPEP § 708.02. Accordingly, the above-identified application has been accorded "special" status.

Telephone inquiries concerning this decision should be directed to Joanne Hama at 571-272-2911 or in her absence the undersigned at 571-272-7099.

All other inquiries concerning either the examination or status of the application should be directed to the Technology Center.

David Bucci
Petitions Examiner
Office of Petitions

UNITED STATES PATENT AND TRADEMARK OFFICE

Commissioner for Patents
United States Patent and Trademark Office
P.O. Box 1450
Alexandria, VA 22313-1450
www.uspto.gov

Beyer Law Group LLP
P.O. BOX 1687
Cupertino CA 95015-1687

MAILED

DEC 0 6 2011

OFFICE OF PETITIONS

In re Application of :
Donald H. Graham III et al. :
Application No. 13/096,884 : DECISION ON PETITION
Filed: April 28, 2011 : TO MAKE SPECIAL UNDER
Attorney Docket No. **TOBSP001C** : 37 CFR 1.102(c)(1)
:

This is a decision on the petition under 37 CFR 1.102(c)(1), filed November 23, 2011, to make the above-identified application special based on applicant's age as set forth in MPEP § 708.02, Section IV.

The petition is **GRANTED**.

A grantable petition to make an application special under 37 CFR 1.102(c)(1) and MPEP § 708.02, Section IV: Applicant's Age must be accompanied by evidence showing that at least one of the applicants is 65 years of age, or more, such as a birth certificate or a statement by applicant. No fee is required

The instant petition includes a statement by a registered attorney. Accordingly, the above-identified application has been accorded "special" status.

Telephone inquiries concerning this decision should be directed to JoAnne Burke at 571-272-4584.

All other inquiries concerning either the examination or status of the application should be directed to the Technology Center.

The application is being forwarded to Technology Center AU 3693 for action on the merits commensurate with this decision.

/JoAnne Burke/
JoAnne Burke
Petitions Examiner
Office of Petitions

UNITED STATES PATENT AND TRADEMARK OFFICE

Commissioner for Patents
United States Patent and Trademark Office
P.O. Box 1450
Alexandria, VA 22313-1450
www.uspto.gov

Sheppard, Mullin, Richter & Hampton, LLP
390 Lytton Avenue
Palo Alto, CA 94301

MAILED

NOV 07 2011

OFFICE OF PETITIONS

In re Application of
Sam Heidari et al.
Application No. 13/096,885
Filed: April 28, 2011
Attorney Docket No. 25DX-159245

DECISION ON PETITION
TO WITHDRAW
FROM RECORD

This is a decision on the Request to Withdraw as attorney or agent of record under 37 C.F.R. § 1.36(b), filed October 21, 2011.

The request is **moot because a revocation of power of attorney has been filed**.

A review of the file record indicates that the power of attorney to Sheppard, Mullin, Richter & Hampton, LLP and all attorneys/agents of record has been revoked by the assignee of the patent application on October 23, 2011. Accordingly, the request to withdraw under 37 C.F.R. § 1.36(b) is moot.

All future communications from the Office will continue to be directed to the below-listed address until otherwise notified by applicant.

Telephone inquires concerning this decision should be directed to Kimberly Inabinet at 571-272-4618.

/Kimberly Inabinet/

Kimberly Inabinet
Petitions Examiner
Office of Petitions

cc: IP Creators
P.O. Box 2789
Cupertino, CA 95015

UNITED STATES PATENT AND TRADEMARK OFFICE

Commissioner for Patents
United States Patent and Trademark Office
P.O. Box 1450
Alexandria, VA 22313-1450
www.uspto.gov

BEYER LAW GROUP LLP
P.O. BOX 1687
CUPTERTINO, CA 95015-1687

MAILED
DEC 15 2011
OFFICE OF PETITIONS

In re Application of :
Donald H. GRAHAM III et al. :
Application No. 13/096,941 : DECISION ON PETITION
Filed : April 28, 2011 :
Attorney Docket No.: TOBSP001D :

This is in response to the petition under 37 CFR 1.102(c)(1) filed November 23, 2011, to make the above-identified application special based on applicant's age as set forth in M.P.E.P. § 708.02, Section IV.

The petition is **GRANTED.**

A grantable petition to make an application special under 37 CFR 1.102(c)(1) and MPEP § 708.02, Section IV: Applicant's Age must be accompanied by evidence showing that at least one of the applicants is 65 years of age, or more, such as a birth certificate or a statement by applicant. Applicant may also submit a statement from a registered practitioner that he or she has evidence that the applicant is 65 years of age or older. No fee is required.

The instant petition includes a statement from David P. Olynick, an attorney or agent registered to practice before the Patent and Trademark Office, indicating that David Olynick is in possession of evidence showing that Donald Graham is 65 years of age or more as required under MPEP § 708.02. Accordingly, the above-identified application has been accorded "special" status.

Telephone inquiries concerning this decision should be directed to Joanne Hama at 571-272-2911 or in her absence the undersigned at 571-272-7099.

All other inquiries concerning either the examination or status of the application should be directed to the Technology Center.

David Bucci
Petitions Examiner
Office of Petitions

IN THE UNITED STATES PATENT AND TRADEMARK OFFICE

In re application of: FINOT et al.	Attorney Docket No.: SKY1P013
Application No.: Unassigned	Examiner: Unassigned
Filed: Herewith	Group: Unassigned
Title: THIN FILM REFLECTIVE COATING PINNING ARRANGEMENT	Confirmation No.: Unassigned

CERTIFICATE OF EFS-WEB TRANSMISSION

I hereby certify that this correspondence is being transmitted electronically through EFS-WEB to the Commissioner for Patents, P.O. Box 1450 Alexandria, VA 22313-1450 on April 28, 2011.

Signed: _____/Dawn Wold/_____
Dawn Wold

Commissioner for Patents
P.O. Box 1450
Alexandria, VA 22313-1450

Dear Sir:

Applicant hereby requests to participate in the Green Technology Pilot Program for the above-identified application.

Applicant hereby requests early publication under 37 CFR 1.219. The Commissioner is hereby authorized to Charge Deposit Account No. 50-4481 (Order No.: SKY1P013) for the amount of $300 in payment of the publication fee.

By filing this petition, Applicant is agreeing to make an election without traverse in a telephonic interview and elect an invention that meets the eligibility requirement and classification requirement set forth in the notice entitled "Pilot Program for Green Technologies Including Greenhouse Gas Reduction" that was published in the Federal Register if the Office determines that the claims are not obviously directed to a single invention.

The application contains no more than three (3) independent claims and twenty (20) total claims.

The application does not contain any multiple dependent claims.

Respectfully Submitted,
BEYER LAW GROUP LLP

/Eric Yoon/
Eric Yoon
Registration No.: 60,611

Date: April 28, 2011

P.O. Box 1687
Cupertino, CA 95015-1687
(408) 255-8001

UNITED STATES PATENT AND TRADEMARK OFFICE

UNITED STATES DEPARTMENT OF COMMERCE
United States Patent and Trademark Office
Address: COMMISSIONER FOR PATENTS
P.O. Box 1450
Alexandria, Virginia 22313-1450
www.uspto.gov

APPLICATION NO.	FILING DATE	FIRST NAMED INVENTOR	ATTORNEY DOCKET NO.	CONFIRMATION NO.
13/096,951	04/28/2011	Marc A. Finot	SKY1P013	5566

58766 7590 08/29/2011

Beyer Law Group LLP
P.O. BOX 1687
Cupertino, CA 95015-1687

EXAMINER	
ART UNIT	PAPER NUMBER
1725	

NOTIFICATION DATE	DELIVERY MODE
08/29/2011	ELECTRONIC

Please find below and/or attached an Office communication concerning this application or proceeding.

The time period for reply, if any, is set in the attached communication.

Notice of the Office communication was sent electronically on above-indicated "Notification Date" to the following e-mail address(es):

USPTOmail@beyerlaw.com

UNITED STATES PATENT AND TRADEMARK OFFICE

Commissioner for Patents
United States Patent and Trademark Office
P.O. Box 1450
Alexandria, VA 22313-1450
www.uspto.gov

8/29/11

Beyer Law Group LLP
P.O. BOX 1687
Cupertino CA 95015-1687

In re Application of	:	
Finot et al.	:	DECISION ON PETITION
Application No. 13/096,951	:	TO MAKE SPECIAL UNDER
Filed: 4/28/2011	:	THE GREEN TECHNOLOGY
Attorney Docket No. **SKY1P013**	:	PILOT PROGRAM

This is a decision on the petition under 37 CFR 1.102, filed 4/28/2011, to make the above-identified application special under the pilot program for applications pertaining to Green Technologies as set forth in 74 Federal Register Notice 64666 (December 8, 2009) and amended by 75 Federal Register Notice 28554 (May 21, 2010) and 75 Federal Register Notice 69049 (November 10, 2010).

The petition is **GRANTED**.

A grantable petition to make an application special under 37 CFR 1.102 and the pilot program as set forth in 74 FR 64666 must be directed to a nonprovisional application filed under 35 USC 111(a) or be a national stage entry under 35 USC 371, exclusive of any reissue applications.

In order to qualify for special status, the following requirements must be met. 1) The application must have no more than 3 independent claims and no more than 20 total claims. 2) The application must not contain any multiple dependent claims. 3) The petition must state the basis for seeking special status, i.e., the claimed invention either: A) materially enhances the quality of the environment or B) materially contributes to: i) the discovery or development of renewable energy resources, ii) the more efficient utilization and conservation of energy resources, or iii) greenhouse gas emission reduction. 4) If the disclosure is not clear on its face that the claimed invention materially contributes under category (A) or (B), the petition must be accompanied by a statement by the applicant, assignee, or an attorney/agent registered to practice before the Office explaining how the materiality standard is met. 5) A statement that applicant will agree to make an election without traverse in a telephonic interview if a restriction requirement is made by the examiner. 6) The petition to make special must be filed electronically. 7) The petition must be filed at least one day prior to the date that a first Office Action appears in the Patent Application Information Retrieval (PAIR) system. 8) The petition must be accompanied by a request for early publication in compliance with 37 CFR 1.219 and include the publication fee as set forth in 37 CFR 1.18(d).

The requirement for a fee for consideration of the petition to make special for applications pertaining to Green Technologies has been waived.

The instant petition complies with items 1 – 8 above. Accordingly, the above-identified application has been accorded "special" status.

Telephone inquires concerning this decision should be directed to Tom Dunn at 571-272-1171.

The application is being forwarded to the Technology Center Art Unit 1725 for action on the merits commensurate with this decision.

/Tom Dunn/

Tom Dunn
Quality Assurance Specialist
Technology Center 1700

UNITED STATES PATENT AND TRADEMARK OFFICE

Commissioner for Patents
United States Patent and Trademark Office
P.O. Box 1450
Alexandria, VA 22313-1450
www.uspto.gov

Beyer Law Group LLP
P.O. BOX 1687
Cupertino CA 95015-1687

MAILED
DEC 06 2011
OFFICE OF PETITIONS

In re Application of :
Donald H. Graham III et al. :
Application No. 13/096,955 : DECISION ON PETITION
Filed: April 28, 2011 : TO MAKE SPECIAL UNDER
Attorney Docket No. **TOBSP001E** : 37 CFR 1.102(c)(1)
:

This is a decision on the petition under 37 CFR 1.102(c)(1), filed November 23, 2011, to make the above-identified application special based on applicant's age as set forth in MPEP § 708.02, Section IV.

The petition is **GRANTED**.

A grantable petition to make an application special under 37 CFR 1.102(c)(1) and MPEP § 708.02, Section IV: Applicant's Age must be accompanied by evidence showing that at least one of the applicants is 65 years of age, or more, such as a birth certificate or a statement by applicant. No fee is required

The instant petition includes a statement by a registered attorney. Accordingly, the above-identified application has been accorded "special" status.

Telephone inquiries concerning this decision should be directed to JoAnne Burke at 571-272-4584.

All other inquiries concerning either the examination or status of the application should be directed to the Technology Center.

The application is being forwarded to Technology Center AU 3621 for action on the merits commensurate with this decision.

/JoAnne Burke/
JoAnne Burke
Petitions Examiner
Office of Petitions

UNITED STATES PATENT AND TRADEMARK OFFICE

Commissioner for Patents
United States Patent and Trademark Office
P.O. Box 1450
Alexandria, VA 22313-1450
www.uspto.gov

DONN K. HARMS
PATENT & TRADEMARK LAW CENTER
SUITE 100
12702 VIA CORTINA
DEL MAR CA 92014

MAILED
MAY 20 2011
OFFICE OF PETITIONS

In re Application of :
Harry L. Guzelimian :
Application No. 13/097,025 : DECISION ON PETITION
Filed: April 28, 2011 : TO MAKE SPECIAL UNDER
Attorney Docket No. **4597-PAT** : 37 CFR 1.102(c)(1)
:

This is a decision on the petition under 37 CFR 1.102(c)(1), filed May 9, 2011, to make the above-identified application special based on applicant's age as set forth in MPEP § 708.02, Section IV.

The petition is **GRANTED**.

A grantable petition to make an application special under 37 CFR 1.102(c)(1) and MPEP § 708.02, Section IV: Applicant's Age must be accompanied by evidence showing that at least one of the applicants is 65 years of age, or more, such as a birth certificate or a statement by applicant. No fee is required

The instant petition includes a statement by a registered attorney. Accordingly, the above-identified application has been accorded "special" status.

Telephone inquiries concerning this decision should be directed to JoAnne Burke at 571-272-4584.

All other inquiries concerning either the examination or status of the application should be directed to the Technology Center.

The application is being forwarded to the Technology Center Art Unit 3618 for action on the merits commensurate with this decision.

JoAnne Burke
Petitions Examiner
Office of Petitions

Doc Code: PPH.PCT.652
Document Description: Petition to make special under PCT-Patent Pros Hwy

PTO/SB/20PCT-KR (06-10)
Approved for use through 01/31/2012. OMB 0651-0058
U.S. Patent and Trademark Office; U. S. DEPARTMENT OF COMMERCE
Under the Paperwork Reduction Act of 1995, no persons are required to respond to a collection of information unless it displays a valid OMB control number.

REQUEST FOR PARTICIPATION IN THE PATENT COOPERATION TREATY - PATENT PROSECUTION HIGHWAY (PCT-PPH) PILOT PROGRAM BETWEEN THE KOREAN INTELLECTUAL PROPERTY OFFICE (KIPO) AND THE USPTO

Application No:	13/097147	Filing date:	29 APR 2011
First Named Inventor:	HODGSON et al.		
Title of the Invention:	BLENDING SYSTEM AND METHOD FOR PREPARING EMULSIONS		

THIS REQUEST FOR PARTICIPATION IN THE PCT-PPH PILOT PROGRAM ALONG WITH THE REQUIRED DOCUMENTS MUST BE SUBMITTED VIA EFS-WEB. INFORMATION REGARDING EFS-WEB IS AVAILABLE AT HTTP://WWW.USPTO.GOV/EBC/EFS_HELP.HTML

APPLICANT HEREBY REQUESTS PARTICIPATION IN THE PCT-PPH PROGRAM AND PETITIONS TO MAKE THE ABOVE-IDENTIFIED APPLICATION SPECIAL UNDER THE PCT-PPH PROGRAM.

The above-identified application is (1) a national stage entry of the corresponding PCT application, or (2) a national stage entry of another PCT application which claims priority to the corresponding PCT application, or (3) a national application that claims domestic/ foreign priority to the corresponding PCT application, or (4) a national application which forms the basis for the priority claim in the corresponding PCT application, or (5) a continuing application of a U.S. application that satisfies one of (1) to (4) above, or (6) a U.S. application that claims domestic benefit to a U.S. provisional application which forms the basis for the priority claim in the corresponding PCT application.

The corresponding PCT application number(s) is/are: PCT/IB2011/051930

The international filing date of the corresponding PCT application(s) is/are: 02 MAY 2011

I. List of Required Documents:

a. **A copy of the latest international work product (WO/ISA, WO/IPEA, or IPER) in the above–identified corresponding PCT application(s)**

☑ Is attached.

☐ Is not attached because the document is already in the U.S. application.

b. **A copy of all claims which were indicated as having novelty, inventive step and industrial applicability in the above-identified corresponding PCT application(s).**

☑ Is attached.

☐ Is not attached because the document is already in the U.S. application.

c. **English translations of the documents in a. and b. above are attached (if the documents are not in the English language). A statement that the English translation is accurate is attached for the document in b. above.**

This collection of information is required by 35 U.S.C. 119, 37 CFR 1.55, and 37 CFR 1.102(d). The information is required to obtain or retain a benefit by the public, which is to file (and by the USPTO to process) an application. Confidentiality is governed by 35 U.S.C. 122 and 37 CFR 1.11 and 1.14. This collection is estimated to take 2 hours to complete, including gathering, preparing, and submitting the completed application form to the USPTO. Time will vary depending upon the individual case. Any comments on the amount of time you require to complete this form and/or suggestions for reducing this burden should be sent to the Chief Information Officer, U.S. Patent and Trademark Office, U.S. Department of Commerce, P.O. Box 1450, Alexandria, VA 22313-1450. DO NOT SEND FEES OR COMPLETED FORMS TO THIS ADDRESS.

PTO/SB/20PCT-KR (06-10)
Approved for use through 01/31/2012. OMB 0651-0058
U.S.Patent and Trademark Office; U.S. DEPARTMENT OF COMMERCE
Under the Paperwork Reduction Act of 1995, no persons are required to respond to a collection of information unless it displays a valid OMB control number.

REQUEST FOR PARTICIPATION IN THE PCT-PPH PILOT PROGRAM BETWEEN THE KIPO AND THE USPTO

(continued)

Application No.:	13/097147
First Named Inventor:	HODGSON et al.

d. **(1) An information disclosure statement listing the documents cited in the international work products (ISR, WO/ISA, WO/IPEA, IPER) of the corresponding PCT application.**

☑ Is attached

☐ Has already been filed in the above-identified U.S. application on _____

(2) Copies of all documents (except) for U.S. patents or U.S. patent application publications)

☑ Are attached.

☐ Have already been filed in the above-identified U.S. application on _____

II. Claims Correspondence Table:

Claims in US Application	Patentable Claims in the corresponding PCT Application	Explanation regarding the correspondence
1-21	1-21	All the claims in the US application sufficiently correspond to the patentable claims in the corresponding PCT application.

III. All the claims in the US application sufficiently correspond to the patentable claims in the corresponding PCT application.

Signature /Myron K. Stout/	Date January 24, 2012
Name (Print/Typed) Myron K. Stout	Registration Number 59,852

Privacy Act Statement

The **Privacy Act of 1974 (P.L. 93-579)** requires that you be given certain information in connection with your submission of the attached form related to a patent application or patent. Accordingly, pursuant to the requirements of the Act, please be advised that: (1) the general authority for the collection of this information is 35 U.S.C. 2(b)(2); (2) furnishing of the information solicited is voluntary; and (3) the principal purpose for which the information is used by the U.S. Patent and Trademark Office is to process and/or examine your submission related to a patent application or patent. If you do not furnish the requested information, the U.S. Patent and Trademark Office may not be able to process and/or examine your submission, which may result in termination of proceedings or abandonment of the application or expiration of the patent.

The information provided by you in this form will be subject to the following routine uses:

1. The information on this form will be treated confidentially to the extent allowed under the Freedom of Information Act (5 U.S.C. 552) and the Privacy Act (5 U.S.C 552a). Records from this system of records may be disclosed to the Department of Justice to determine whether disclosure of these records is required by the Freedom of Information Act.
2. A record from this system of records may be disclosed, as a routine use, in the course of presenting evidence to a court, magistrate, or administrative tribunal, including disclosures to opposing counsel in the course of settlement negotiations.
3. A record in this system of records may be disclosed, as a routine use, to a Member of Congress submitting a request involving an individual, to whom the record pertains, when the individual has requested assistance from the Member with respect to the subject matter of the record.
4. A record in this system of records may be disclosed, as a routine use, to a contractor of the Agency having need for the information in order to perform a contract. Recipients of information shall be required to comply with the requirements of the Privacy Act of 1974, as amended, pursuant to 5 U.S.C. 552a(m).
5. A record related to an International Application filed under the Patent Cooperation Treaty in this system of records may be disclosed, as a routine use, to the International Bureau of the World Intellectual Property Organization, pursuant to the Patent Cooperation Treaty.
6. A record in this system of records may be disclosed, as a routine use, to another federal agency for purposes of National Security review (35 U.S.C. 181) and for review pursuant to the Atomic Energy Act (42 U.S.C. 218(c)).
7. A record from this system of records may be disclosed, as a routine use, to the Administrator, General Services, or his/her designee, during an inspection of records conducted by GSA as part of that agency's responsibility to recommend improvements in records management practices and programs, under authority of 44 U.S.C. 2904 and 2906. Such disclosure shall be made in accordance with the GSA regulations governing inspection of records for this purpose, and any other relevant (*i.e.*, GSA or Commerce) directive. Such disclosure shall not be used to make determinations about individuals.
8. A record from this system of records may be disclosed, as a routine use, to the public after either publication of the application pursuant to 35 U.S.C. 122(b) or issuance of a patent pursuant to 35 U.S.C. 151. Further, a record may be disclosed, subject to the limitations of 37 CFR 1.14, as a routine use, to the public if the record was filed in an application which became abandoned or in which the proceedings were terminated and which application is referenced by either a published application, an application open to public inspection or an issued patent.
9. A record from this system of records may be disclosed, as a routine use, to a Federal, State, or local law enforcement agency, if the USPTO becomes aware of a violation or potential violation of law or regulation.

UNITED STATES PATENT AND TRADEMARK OFFICE

Commissioner for Patents
United States Patent and Trademark Office
P.O. Box 1450

MAILED
MAR 27 2012
OFFICE OF PETITIONS

SCHLUMBERGER TECHNOLOGY CORPORATION
10001 Richmond Avenue
IP Administration Center of Excellence
Houston TX 77042

In re Application of : DECISION ON REQUEST TO
Kim A. HODGSON et al. : PARTICIPATE IN PCT-PPH PROGRAM
Application No. 13/097,147 : AND PETITION TO MAKE SPECIAL
Filed: April 29, 2011 : UNDER 37 CFR 1.102(a)
Atty. Docket No.: 56.1307
For: BLENDING SYSTEM AND METHOD FOR PREPARING EMULSIONS

This is a decision on the request to participate in the PCT Patent Prosecution Highway (PCT-PPH) program and the petition under 37 CFR 1.102(a), filed January 24, 2012, to make the above-identified application special.

The request and petition are **DISMISSED.**

A grantable request to participate in the PCT –PPH program and petition to make special under 37 CFR 1.102(a) require:

(1) the U.S. application must have an eligible relationship to one or more PCT application where the ISA or IPEA are the JPO, EPO, KIPO, IPAU, Russia, Spain, Finland, Austria, or USPTO;

(2) at least one claim in the PCT application has novelty, inventive step, and industrial applicability and must be free of any observations in Box VIII in the latest work product in the international stage or applicant must identify and explain why the claim(s) is/are not subject to the observation in Box VIII;

(3) applicant must submit a copy of the claim(s) from the PCT application(s) that have novelty, inventive step, and industrial applicability along with an English translation thereof and a statement that the English translation is accurate, if the claims are not in the English language;

(4) all the claims in the U.S. application must sufficiently correspond or be amended to sufficiently correspond to the claim(s) that have novelty, inventive step, and industrial applicability in the PCT application(s);

(5) examination of the U.S. application has not begun;

(6) applicant must submit a copy of the latest international work product from the PCT application indicating that the claim(s) have novelty, inventive step, and industrial applicability along with an English translation thereof;

(7) applicant must submit an IDS listing the documents cited by the PCT examiner in the international work product along with copies of documents except U.S. patents or U.S. patent application publications; and

(8) applicant is required to submit a claims correspondence table in English which indicates how all the claims in the U.S. application correspond to the claims indicated as having novelty, inventive step, and industrial applicability in the latest international work product.

Requirements (2) to (8) are considered to have been met. However, the request to participate in the PPH program and petition fail to meet requirement (1).

Regarding requirement (1), there is no evidence of the U.S. application having an eligible relationship to the PCT application listed in the request.

Applicant is given **ONE** opportunity with a time period of **ONE MONTH** or **THIRTY DAYS**, whichever is longer, from the mailing date of this decision to correct the deficiencies. **NO EXTENSION OF TIME UNDER 37 CFR 1.136 IS PERMITTED.** If the deficiencies are not corrected within the time period given, the application will await action in its regular turn.

Response must be filed via the Electronic Filing System (EFS) using the document description: Petition to make special under Patent Pros. Hwy. Any preliminary amendments and IDS submitted with the PPH documents must be separately indexed as a preliminary amendment and IDS, respectively.

Telephone inquiries concerning this decision should be directed to Robert DeWitty, Petition Attorney, Office of Petitions at 571-272-8427.

All other inquiries concerning the examination or status of the application is accessible in the PAIR system at http://www.uspto.gov/ebc/index.html.

Thurman K Page

David Bucci
Petitions Examiner
Office of Petitions

Doc Code: PET.GREEN
Document Description: Petition for Green Tech Pilot

PTO/SB/420 (03-11)

PETITION TO MAKE SPECIAL UNDER THE GREEN TECHNOLOGY PILOT PROGRAM

Attorney Docket Number: 248311	Application Number (if known): 13/097,367	Filing date: 04/29/2011

First Named Inventor: Asha Vasudevarao

Title: METHOD, SYSTEM AND COMPUTER PROGRAM PRODUCT FOR DYNAMIC RULE ENGINE FOR A WIND TURBINE FARM

APPLICANT HEREBY REQUESTS TO PARTICIPATE IN THE GREEN TECHNOLOGY PILOT PROGRAM FOR THE ABOVE-IDENTIFIED APPLICATION. See Instruction Sheet on page 2.

This petition must be timely filed electronically using the USPTO electronic filing system, EFS-Web.

1. By filing this petition:

   Applicant is requesting early publication: Applicant hereby requests early publication under 37 CFR 1.219 and the publication fee set forth in 37 CFR 1.18(d) accompanies this request.

2. By filing this petition: applicant is agreeing to make an election without traverse in a telephonic interview and elect an invention that meets the eligibility requirements for the Green Technology Pilot Program, if the Office determines that the claims are not obviously directed to a single invention. See Instruction Sheet.

3. This request is accompanied by statements of special status for the eligibility requirement.

4. The application contains no more than three (3) independent claims and twenty (20) total claims.

5. The application does not contain any multiple dependent claims.

6. Other attachments: Statement Concerning the Basis for the Special Status

Signature /Allison W. Mages/	Date 11/18/11
Name (Print/Typed) Allison W. Mages	Registration Number 57,275

Note: Signatures of all the inventors or assignees of record of the entire interest or their representative(s) are required in accordance with 37 CFR 1.33 and 11.18. Please see 37 CFR 1.4(d) for the form of the signature. If necessary, submit multiple forms for more than one signature, see below.*

☐ *Total of _____ forms are submitted.

If you need assistance in completing the form, call 1-800-PTO-9199 and select option 2.

IN THE UNITED STATES PATENT AND TRADEMARK OFFICE

First Named Inventor: Asha Vasudevarao	)
Confirmation No.: 6382	)
	)
Serial No.: 13/097,367	)
	)
Filing Date: 04/29/2011	)
	)
Atty Docket No.: 248311	)

VIA EFS
Commissioner for Patents
P.O. Box 1450
Alexandria, VA 22313-1450

Statement Concerning the Basis for the Special Status

SIR:

Embodiments of the present invention are directed to a methods, systems and computer program products for method for monitoring and controlling the operation of a wind turbine or wind turbines, and specifically to a method, system or computer program product for dynamically configuring at least a portion of SCADA data for a selected group of the wind farm parameters using a graphical user interface (GUI) that interfaces with a rules engine. (See [0001]).

In recent years, reliance upon wind as a source of energy has grown. As reliance upon wind as a source of energy continues to grows, increased efficiency of wind turbines and wind turbine farms increases in importance. (See [0002]).

Generally, a wind turbine converts wind energy into rotational energy, and more specifically, converts kinetic energy of wind into mechanical energy. The mechanical energy is used for producing electrical power. Wind turbines may

include a rotor having multiple blades that rotate in response to force provided by the wind. Upon rotating the multiple blades, a drive shaft rotates, which in turn drives an electrical generator to generate the electrical power. (See [0003]).

A wind farm is a group of interconnected wind turbines at a location. The location of the wind farm may consist of two wind turbines to hundreds of wind turbines. The location of the wind farm may cover a small area of hundreds of square yards (square meters) to an extended area of hundreds of square miles (square kilometers). The location of the wind farm may be located off-shore or near-shore, typically selected to increase the energy of the wind. The location may be selected to increase the energy generated by the wind. (See [0004]).

Wind turbines and wind farms can be monitored by a computer system, for example, a Supervisory Control and Data Acquisition system ("SCADA" system). The SCADA system can monitor and control a plant or equipment in industries such as telecommunications, water and waste control, energy, oil and gas refining, transportation. The SCADA system can gather information, such as where a leak on a pipeline has occurred, transfer the information back to a central site, alert a home station that the leak has occurred, carry out necessary analysis and control, such as determining if the leak is critical, and display the information in a logical and organized manner. The SCADA system can be simple, such as a system that monitors environmental conditions of a small office building, or complex, such as a system that monitors all activity in a nuclear power plant or a municipal water system. (See [0005]).

As wind turbines and wind farms become more interconnected, larger, and/or more remote, providing performance-related information to an operator about one or more wind turbines or wind farms becomes more important. If the operator receives too little information, then the operator will not be aware of performance-related issues. If the operator receives too much information, then the operator will not be capable of adequately responding to performance-related issues. Furthermore, if the information presented to the operator is not in a format that is useful or comfortable to the operator, then the efficient use of the information can be reduced. (See [0006]).

Therefore, what are desired are methods, systems and computer program products that overcome challenges in the art, some of which are described above. (See [0007]).

In one aspect, embodiments of a method of configuring rules for SCADA data of a wind farm are described. One embodiment comprises receiving supervisory control and data acquisition (SCADA) data for a wind farm comprised of one or more wind turbines. The SCADA data includes parameters for the wind farm. At least a portion of the SCADA data for a selected group of the wind farm parameters is dynamically configured using a graphical user interface (GUI) that interfaces with a rules engine. The SCADA data is configured using one or more operators. At least a portion of the dynamically configured data is output. (See [0009]).

In another aspect, embodiments of systems of configuring rules for SCADA data of a wind farm are described. One embodiment comprises a

memory; a display; and a processor, wherein the processor is operably connected with the memory and the display. The processor is configured to receive supervisory control and data acquisition (SCADA) data for a wind farm comprised of one or more wind turbines. The SCADA data includes parameters for the wind farm. The processor is configured to dynamically configure at least a portion of the SCADA data for a selected group of the wind farm parameters using a graphical user interface (GUI) that interfaces with a rules engine. The SCADA data is configured using one or more operators. At least a portion of the dynamically configured data is output using the display. (See [0010]).

In yet another aspect, embodiments of a computer program product of configuring rules for SCADA data of a wind farm are described. One embodiment comprises computer-executable code sections stored on a non-transitory computer readable medium. The computer-executable code sections comprise a first section for receiving supervisory control and data acquisition (SCADA) data for a wind farm comprised of one or more wind turbines. The SCADA data includes parameters for the wind farm. The embodiment of a computer program product is further comprised of a second section for dynamically configuring at least a portion of the SCADA data for a selected group of the wind farm parameters using a graphical user interface (GUI) that interfaces with a rules engine. The SCADA data is configured using one or more operators. Further comprising the embodiment of a computer program product is a third section for outputting at least a portion of the dynamically configured data. (See [0011]).

Accordingly, Applicant respectfully submits that Special Status is sought on the basis that the present invention materially contributes to the discovery or development of renewable energy resources.

The undersigned representative may be contacted at the number below to facilitate the resolution of any matters. Please charge any fees that are incurred in connection with this Statement to deposit account no. 09-0470.

Respectfully submitted,

General Electric Company

By : /Allison W. Mages/
Allison W. Mages
Reg. No. 57,275

Dated: November 18, 2011

GE Global Patent Operation
2 Corporate Drive, Suite 648
Shelton, CT 06484
203-944-6730

UNITED STATES PATENT AND TRADEMARK OFFICE

UNITED STATES DEPARTMENT OF COMMERCE
United States Patent and Trademark Office
Address: COMMISSIONER FOR PATENTS
P.O. Box 1450
Alexandria, Virginia 22313-1450
www.uspto.gov

APPLICATION NO.	FILING DATE	FIRST NAMED INVENTOR	ATTORNEY DOCKET NO.	CONFIRMATION NO.
13/097,367	04/29/2011	Asha Vasudevarao	248311	6382

7788 7590 12/05/2011

GE ENERGY GENERAL ELECTRIC
C/O ERNEST G. CUSICK
ONE RIVER ROAD, BLD. 43, ROOM 225
SCHENECTADY, NY 12345

EXAMINER	
VU, KIEU D	
ART UNIT	**PAPER NUMBER**
2173	
MAIL DATE	**DELIVERY MODE**
12/05/2011	PAPER

Please find below and/or attached an Office communication concerning this application or proceeding.

The time period for reply, if any, is set in the attached communication.

UNITED STATES PATENT AND TRADEMARK OFFICE

Commissioner for Patents
United States Patent and Trademark Office
P.O. Box 1450
Alexandria, VA 22313-1450
www.uspto.gov

GE ENERGY GENERAL ELECTRIC
C/O ERNEST G. CUSICK
ONE RIVER ROAD, BLD. 43, ROOM 225
SCHENECTADY NY 12345

In re Application of:	:	
VASUDEVARAO, Asha et al.	:	DECISION ON PETITION
Application No.: 13/097,367	:	TO MAKE SPECIAL UNDER
Filed: April 29, 2011	:	THE GREEN TECHNOLOGY
For: **METHOD, SYSTEM AND COMPUTER PROGRAM PRODUCT FOR DYNAMIC RULE ENGINE FOR A WIND TURBINE FARM**	:	PILOT PROGRAM

This is a decision on the petition under 37 CFR 1.102, filed November 18, 2011, to make the above-identified application special under the pilot program for applications pertaining to Green Technologies as set forth in 74 Federal Register Notice 64666 (December 8, 2009) and amended by 75 Federal Register Notice 28554 (May 21, 2010).

The petition is **GRANTED**.

A grantable petition to make an application special under 37 CFR 1.102 and the pilot program as set forth in 74 FR 64666 must be directed to a nonprovisional application filed under 35 USC 111(a) or be a national stage entry under 35 USC 371, exclusive of any reissue applications and be filed prior to the date of the notice, December 8, 2009.

In order to qualify for special status, the following requirements must be met. 1) The application must have no more than 3 independent claims and no more than 20 total claims. 2) The application must not contain any multiple dependent claims. 3) The petition must state the basis for seeking special status, i.e., the claimed invention either: A) materially enhances the quality of the environment or B) materially contributes to: i) the discovery or development of renewable energy resources, ii) the more efficient utilization and conservation of energy resources, or iii) greenhouse gas emission reduction. 4) If the disclosure is not clear on its face that the claimed invention materially contributes under category (A) or (B), the petition must be accompanied by a statement by the applicant, assignee, or an attorney/agent registered to practice before the Office explaining how the materiality standard is met. 5) A statement that applicant will agree to make an election without traverse in a telephonic interview if a restriction requirement is made

by the examiner. 6) The petition to make special must be filed electronically. 7) The petition must be filed at least one day prior to the date that a first Office Action appears in the Patent Application Information Retrieval (PAIR) system. 8) The petition must be accompanied by a request for early publication in compliance with 37 CFR 1.219 and include the publication fee as set forth in 37 CFR 1.18(d).

The requirement for a fee for consideration of the petition to make special for applications pertaining to Green Technologies has been waived.

The instant petition complies with items 1 – 8 above. Accordingly, the above-identified application has been accorded "special" status.

The application is being forwarded to the Technology Center Art Unit 2173 for action on the merits commensurate with this decision.

Telephone inquires concerning this decision should be directed to Eddie C. Lee at 571-272-1732.

/Eddie C. Lee/

Quality Assurance Specialist
Technology Center 2100

Doc Code: PET.GREEN
Document Description: Petition for Green Tech Pilot

PTO/SB/420 (11-10)
Approved for use through 01/31/2011. OMB 0651-0062
U.S. Patent and Trademark Office; U. S. DEPARTMENT OF COMMERCE
Under the Paperwork Reduction Act of 1995, no persons are required to respond to a collection of information unless it displays a valid OMB control number.

PETITION TO MAKE SPECIAL UNDER THE GREEN TECHNOLOGY PILOT PROGRAM

Attorney Docket Number: 83179395	Application Number (if known): 13/097,408	Filing date: April 29, 2011
First Named Inventor: James Michael Kerns		
Title: METHOD AND SYSTEM FOR FUEL VAPOR CONTROL		

APPLICANT HEREBY REQUESTS TO PARTICIPATE IN THE GREEN TECHNOLOGY PILOT PROGRAM FOR THE ABOVE-IDENTIFIED APPLICATION. See Instruction Sheet on page 2.

This petition must be timely filed electronically using the USPTO electronic filing system, EFS-Web.

1. By filing this petition:

   Applicant is requesting early publication: Applicant hereby requests early publication under 37 CFR 1.219 and the publication fee set forth in 37 CFR 1.18(d) accompanies this request.

2. By filing this petition: applicant is agreeing to make an election without traverse in a telephonic interview and elect an invention that meets the eligibility requirements for the Green Technology Pilot Program, if the Office determines that the claims are not obviously directed to a single invention. See Instruction Sheet.

3. This request is accompanied by statements of special status for the eligibility requirement.

4. The application contains no more than three (3) independent claims and twenty (20) total claims.

5. The application does not contain any multiple dependent claims.

6. Other attachments: _____

Signature /John D. Russell/	Date July 6, 2011
Name (Print/Typed) John D. Russell	Registration Number 47,048

Note: *Signatures of all the inventors or assignees of record of the entire interest or their representative(s) are required in accordance with 37 CFR 1.33 and 11.18. Please see 37 CFR 1.4(d) for the form of the signature. If necessary, submit multiple forms for more than one signature see below*.*

[X] *Total of 1 forms are submitted.

The information is required to obtain or retain a benefit by the public which is to file (and by the USPTO to process) an application. Confidentiality is governed by 35 U.S.C. 122 and 37 CFR 1.11 and 1.14. This collection is estimated to take 12 hours to complete, including gathering, preparing, and submitting the completed application form to the USPTO. Time will vary depending upon the individual case. Any comments on the amount of time you require to complete this form and/or suggestions for reducing this burden, should be sent to the Chief Information Officer, U.S. Patent and Trademark Office, U.S. Department of Commerce, P.O. Box 1450, Alexandria, VA 22313-1450. DO NOT SEND FEES OR COMPLETED FORMS TO THIS ADDRESS. **SEND TO: Commissioner for Patents, P.O. Box 1450, Alexandria, VA 22313-1450.**

If you need assistance in completing the form, call 1-800-PTO-9199 and select option 2.

IN THE UNITED STATES PATENT AND TRADEMARK OFFICE

Applicants	:	James Michael Kerns, et al.
Application No.	:	13/097,408
Filed	:	April 29, 2011
Title	:	METHODS AND SYSTEMS FOR FUEL VAPOR CONTROL
Group Art Unit	:	3747
Confirmation No.	:	6463
Docket No.	:	83179395

Commissioner for Patents
P.O. Box 1450
Alexandria, VA 22313-1450

CERTIFICATE OF TRANSMISSION

I hereby certify that this correspondence is being transmitted via the U.S. Patent and Trademark Office electronic filing system (EFS-Web) to the USPTO on:

July 6, 2011	/Angie C. Farr/
Date	Angie C. Farr

STATEMENTS OF SPECIAL STATUS

Applicants respectfully request consideration of the following statement concerning the basis for the special status as well as the following statement pertaining to the materiality standard.

I. Statement concerning the basis for special status.

Applicants submit that special status is sought on the following basis: the claimed invention materially enhances the quality of the environment.

II. Statement pertaining to the materiality standard.

As a preliminary matter, Applicants note that the following statement refers explicitly to the elements of independent claim 1, which is the broadest claim in many respects.

Applicants submit that the claimed invention materially enhances the quality of the environment by reducing engine emissions, which negatively impact the quality of the environment. Specifically, the claimed invention improves control over fuel tank vapor release to a canister, and improves control over canister purging, to minimize air-

fuel ratio disturbances that can lead to increased emissions. As explained in the Background and Summary of the subject application, reduced engine operation times in hybrid vehicles, such as plug-in hybrid vehicles, enable fuel economy and reduced fuel emissions benefits. However, the shorter engine operation times can lead to insufficient purging of fuel vapors from the vehicle's emission control system. To address this issue, hybrid vehicles may include a fuel tank isolation valve (FTIV) between a fuel tank and a hydrocarbon canister of the emission system to limit the amount of fuel vapors absorbed in the canister. Engine control systems may coordinate fuel tank pressure relief with refueling and canister purging operations to enable emissions control.

In traditional approaches, the FTIV is opened if a fuel tank pressure exceeds a limit and if the canister purge rate is higher than a threshold, to return the tank pressure near atmospheric pressure values. However, air-to-fuel ratio disturbances may arise since canister loading may be more variable (and less predictable) than canister unloading. The disturbances may be exacerbated during lower canister purge rate conditions. Specifically, since the FTIV is kept open until the desired fuel tank pressure is reached, the amount of fuel vapors bled from the fuel tank to the canister may vary unpredictably. For example, there may be sudden fuel vapor spikes during the unloading of fuel vapors from the canister. The fuel vapor spikes from the fuel tank may overload the canister, leading to higher air-to-fuel ratio disturbances and degraded exhaust emissions.

The claimed invention addresses this issue by providing a method for coordinating the loading and unloading of fuel vapors in a canister. For example, claim 1 recites:

> A method of operating a fuel vapor recovery system, comprising,
>
> purging fuel vapors from a canister to an engine intake to reduce a stored fuel vapor amount in the canister; and
>
> intermittently purging fuel vapors from a fuel tank to the canister to increase a stored fuel vapor amount in a canister buffer, a duration and interval of the intermittent purging based on the stored fuel vapor amount in the buffer.

By adjusting the purging from the fuel tank based on a buffer capacity, loading of fuel vapors from the fuel tank to the buffer may be better controlled. In particular, by delivering fuel vapors as multiple purge pulses, rather than as a single purge, with each pulse adjusted based on the buffer capacity, buffer loading may be better controlled and

air-to-fuel ratio disturbances may be reduced. By cyclically unloading a canister buffer before loading the buffer with fuel vapors from the fuel tank, purging of fuel vapors from the fuel tank may be better coordinated with purging of fuel vapors from the canister. In this way, air-to-fuel ratio disturbances may be reduced, thus reducing engine emissions.

Please charge any cost incurred in this filing, along with any other costs, to Deposit Account No. 06-1510.

Respectfully submitted,

ALLEMAN HALL MCCOY RUSSELL & TUTTLE LLP

/John D. Russell/
John D. Russell
Registration No. 47,048
Customer No. 36865
Attorney/Agent for Applicants/Assignee
806 S.W. Broadway, Suite 600
Portland, Oregon 97205
Telephone: (503) 459-4141
Facsimile: (503) 459-4142

UNITED STATES PATENT AND TRADEMARK OFFICE

UNITED STATES DEPARTMENT OF COMMERCE
United States Patent and Trademark Office
Address: COMMISSIONER FOR PATENTS
P.O. Box 1450
Alexandria, Virginia 22313-1450
www.uspto.gov

APPLICATION NO.	FILING DATE	FIRST NAMED INVENTOR	ATTORNEY DOCKET NO.	CONFIRMATION NO.
13/097,408	04/29/2011	James Michael Kerns	83179395	6463

36865 7590 07/15/2011

ALLEMAN HALL MCCOY RUSSELL & TUTTLE, LLP
806 S.W. BROADWAY, SUITE 600
PORTLAND, OR 97205

EXAMINER	
ART UNIT	PAPER NUMBER
3747	

MAIL DATE	DELIVERY MODE
07/15/2011	PAPER

Please find below and/or attached an Office communication concerning this application or proceeding.

The time period for reply, if any, is set in the attached communication.

UNITED STATES PATENT AND TRADEMARK OFFICE

Commissioner for Patents
United States Patent and Trademark Office
P.O. Box 1450
Alexandria, VA 22313-1450
www.uspto.gov

ALLEMAN HALL MCCOY RUSSELL & TUTTLE, LLP
806 S.W. BROADWAY, SUITE 600
PORTLAND OR 97205

In re Application of
KERNS, JAMES MICHAEL
Application No. 13/097408
Filed: April 29, 2011
Attorney Docket No. 83179395

DECISION ON PETITION
TO MAKE SPECIAL UNDER
THE GREEN TECHNOLOGY
PILOT PROGRAM

This is a decision on the petition under 37 CFR 1.102, filed July 6, 2011, to make the above-identified application special under the pilot program for applications pertaining to Green Technologies as set forth in 74 Federal Register Notice 64666 (December 8, 2009) and amended by 75 Federal Register Notice 28554 (May 21, 2010) and 75 Federal Register Notice 69049 (November 10, 2010).

The petition is **granted**.

A grantable petition to make an application special under 37 CFR 1.102 and the pilot program as set forth in 74 FR 64666 must be directed to a nonprovisional application filed under 35 USC 111(a) or be a national stage entry under 35 USC 371, exclusive of any reissue applications.

If reconsideration of this decision is desired, a petition for reconsideration must be filed within ONE (1) MONTH OR THIRTY (30) DAYS from the mail date of this decision, whichever is longer. No extension of this time limit can be granted under 37 CFR 1.136(a) or (b). The petition for reconsideration should include an exhaustive attempt to provide the lacking item(s) noted below, since, after a decision on the petition for reconsideration, no further reconsideration or review of the matter will be undertaken by the Director.

In order to qualify for special status, the following requirements must be met. 1) The application must have no more than 3 independent claims and no more than 20 total claims. 2) The application must not contain any multiple dependent claims. 3) The petition must state the basis for seeking special status, i.e., the claimed invention either: A) materially enhances the quality of the environment or B) materially contributes to: i) the discovery or development of renewable energy resources, ii) the more efficient utilization and conservation of energy resources, or iii) greenhouse gas emission reduction. 4) If the disclosure is not clear on its face that the claimed invention materially contributes under category (A) or (B), the petition must be accompanied by

a statement by the applicant, assignee, or an attorney/agent registered to practice before the Office explaining how the materiality standard is met. 5) A statement that applicant will agree to make an election without traverse in a telephonic interview if a restriction requirement is made by the examiner. 6) The petition to make special must be filed electronically. 7) The petition must be filed at least one day prior to the date that a first Office Action appears in the Patent Application Information Retrieval (PAIR) system. 8) The petition must be accompanied by a request for early publication in compliance with 37 CFR 1.219 and include the publication fee as set forth in 37 CFR 1.18(d).

The requirement for a fee for consideration of the petition to make special for applications pertaining to Green Technologies has been waived.

The instant petition complies with items 1 – 8 above. Accordingly, the above-identified application has been accorded "special" status.

Telephone inquires concerning this decision should be directed to Henry C. Yuen at 571-272-4856.

This application will be forwarded to the Technology Center Art Unit 3747 for action on the merits commensurate with this decision.

/Henry C. Yuen/

Henry C. Yuen
Quality Assurance Specialist
Technology Center TC 3700

UNITED STATES PATENT AND TRADEMARK OFFICE

Commissioner for Patents
United States Patent and Trademark Office
P.O. Box 1450
Alexandria, VA 22313-1450
www.uspto.gov

SIEMENS CORPORATION
INTELLECTUAL PROPERTY DEPARTMENT
170 WOOD AVENUE SOUTH
ISELIN NJ 08830

MAILED

SEP 02 2011

OFFICE OF PETITIONS

In re Application of :
Renbin Peng et al. : DECISION ON PETITION
Application No. 13/097,497 :
Received: April 29, 2011 :
Attorney Docket No. **2010P08511 US01** :

This is a decision on the petition filed June 29, 2011, under 37 CFR 1.57(a), which is being treated as a petition requesting that the above-identified application, without drawings, be accorded a filing date of April 29, 2011.

Applicant is encouraged to note **37 CFR 1.4(c)** when submitting papers to the USPTO.

Application papers in the above-identified application were deposited on April 29, 2011. However, on May 13, 2011, the Office of Patent Application Processing mailed applicants a "Notice of Incomplete Nonprovisional Application," notifying applicants that the application papers had not been accorded a filing date because the application was deposited without drawings. In response, applicants timely filed this petition. Applicants request that the application be amended to include the inadvertently omitted drawings on the basis that the application as filed contained a prior benefit claim under 37 CFR 1.55 or 1.78.

Petitioner's arguments and evidence have been considered. However, a review of the application confirms that, as filed, the application contained at least one method claim. MPEP 601.01(f) provides that:

> It has been USPTO practice to treat an application that contains at least one process or method claim as an application for which a drawing is not necessary for an understanding of the invention under 35 U.S.C. 113 (first sentence).

Thus, pursuant to § 601.01(f), where the application includes at least one method claim, a drawing is not considered essential for a filing date. The instant application includes a method claim. Therefore, the instant application is entitled to a filing date without drawings present in the application.

Accordingly, the Office should have granted the application a filing date and mailed a Notice of Omitted Items instead of a Notice of Incomplete Nonprovisional Application. As stated in MPEP 601.01(g) under the section entitled, "Application Entitled to a Filing Date," applicant may submit an amendment to include the inadvertently omitted portion of the drawing(s) pursuant to 37 CFR 1.57(a):

> [i]f an application was filed on or after September 21, 2004, and contains a claim under 37 CFR 1.55 for priority of a prior-filed foreign application, or a claim under 37 CFR 1.78 for the benefit of a prior-filed provisional, nonprovisional, or international application that was present on the filing date of the application, and the omitted portion of the drawing(s) was inadvertently omitted from the application and is completely contained in the prior-filed application[.]

Please note that no petition is required and that the amendment must comply with 37 CFR 1.57(a) and 37 CFR 1.121. See MPEP § 201.17. Any amendment to include the inadvertently omitted drawing(s) will be considered by the examiner.

To the extent the instant petition requests a filing date of April 29, 2011, with no drawings present in the application, the petition is **GRANTED**.

Given the basis for granting this petition, no petition fee is necessary. Therefore, applicants may request a refund of the petition fee by writing to the Office of Finance, Refund Section. A copy of this request should accompany the request.

Pursuant to this decision, the application will be referred to Office of Patent Application Processing for:

- **correction of the filing date to April 29, 2011**;
- **for indication in Office records, as appropriate, that "0" sheets of drawings were present on filing** and
- **for issuance of a filing receipt.**

Entry of the amendment embedded in the petition filed June 29, 2011, will be determined by the examiner.

Telephone inquiries concerning this matter may be directed to Karen Creasy at (571) 272-3208.

Anthony Knight
Director
Office of Petitions

UNITED STATES PATENT AND TRADEMARK OFFICE

UNITED STATES DEPARTMENT OF COMMERCE
United States Patent and Trademark Office
Address: COMMISSIONER FOR PATENTS
P.O. Box 1450
Alexandria, Virginia 22313-1450
www.uspto.gov

APPLICATION NO.	FILING DATE	FIRST NAMED INVENTOR	ATTORNEY DOCKET NO.	CONFIRMATION NO.
13/097,542	04/29/2011	Zhaojie Zhou	4202-12100	6734

97698 7590 05/26/2011

Huawei Technologies Co., Ltd.
c/o Conley Rose, P.C.
5601 Granite Parkway
Plano, TX 75024

EXAMINER	
TRINH, TAN H	

ART UNIT	PAPER NUMBER
2618	

MAIL DATE	DELIVERY MODE
05/26/2011	PAPER

Please find below and/or attached an Office communication concerning this application or proceeding.

The time period for reply, if any, is set in the attached communication.

UNITED STATES PATENT AND TRADEMARK OFFICE

Commissioner for Patents
United States Patent and Trademark Office
P.O. Box 1450
Alexandria, VA 22313-1450
www.uspto.gov

Huawei Technologies Co., Ltd.
c/o Conley Rose, P.C.
5601 Granite Parkway
Plano TX 75024

In re Application of:
ZHOU, ZHAOJIE
Serial No.: 13/097,542
Filed: April 29, 2011

Title: **DATA TRANSMISSION METHOD AND CORRESPONDING DEVICES**

DECISION ON PETITION TO MAKE SPECIAL FOR NEW APPLICATION UNDER 37 C.F.R. § 1.102 & M.P.E.P. § 708.02

This is a decision on the petition filed on on April 29, 2011 to make the above-identified application special for accelerated examination procedure under 37 C.F.R. § 1.102(d).

The petition to make the application special is **DISMISSED**.

REGULATION AND PRACTICE

A grantable petition to make special under 37 C.F.R. § 1.102(d) and pursuant to the "Change to Practice for Petitions in Patent Applications to Make Special and for Accelerated Examination" published in the Federal Register on June 26, 2006 (71 Fed. Reg. 36323), must satisfy the following conditions:

I. Conditions Regarding the Application:

1. the application must be a non-reissue utility or design application filed under 37 CFR 1.111(a);

2. the application, the petition and the required fees must be filed electronically using the USPTO's electronic filing system (EFS), or EFS-web; if not filed electronically, a statement asserting that EFS and EFS-web were not available during the normal business hours.

3. at the time of filing, the application must be complete under 37 CFR 1.51 and in condition for examination;

4. the application must contain three or fewer independent claims and twenty or fewer total claims and the claims must be directed to a single invention.

II. Conditions Regarding the Petition:

The petition must:

1. be filed with the application;

2. include a statement that applicant agrees not to separately argue the patentability of any independent claim during any appeal in the application;

3. include a statement that applicant agrees to make an election without traverse in a telephone interview.

4. include a statement that applicant agrees to conduct such an interview when requested by the examiner.

5. include a statement, made based on a good faith belief, that a preexamination search in compliance with the following requirements, was conducted, including an identification of the filed of search by United States class and subclass, where applicable, and for database searches, the search logic or chemical structure or sequence used as a query, the name of the file(s) searched and the database service, and the date of the search.

The preexamination search must:

5.1 involve U.S. patents and patent application publications, foreign patent documents, and non-patent literature, unless the applicant can justify with reasonable certainty that no references more pertinent than those already identified are likely to be found in the eliminated sources and includes such a justification with this statement;

5.2. be directed to the claimed invention and encompass all of the features of the claims, giving the claims the broadest reasonable interpretation;

5.3. encompass the disclosed features that may be claimed.

6. must provide in support of the petition an accelerated examination support document. An accelerated examination support document must include:

6.1. an information disclosure statement (IDS) in compliance with 37 CFR 1.98 citing each reference deemed most closely related to the subject matter of each of the claims;

6.2. an identification of all the limitations in the claims that are disclosed by the reference specifying where the limitation is disclosed in the cited reference;

6.3. a detailed explanation of how each of the claims are patentable over the references cited with particularity required by 37 CFR 1.111(b) and (c);

6.4. a concise statement of the utility of the invention as defined in each of the independent claims (unless the application is a design application);

6.5. a showing of where each limitation of the claims finds support under 35 USC 112, first paragraph, in the written description of the specification. If applicable, the showing must also identify: (1) each means- (or step) plus-function claim element that invokes consideration under 35 USC 112, sixth paragraph; and (2) the structure, material, or acts in the specification that corresponds to each means- (or step) plus-function claim element that invokes consideration under 35 USC 112, sixth paragraph; if the application claims the benefit of one or more applications under title 35, United States Code, the showing must also include where each limitation of the claims finds support under 35 USC 112, first paragraph, in each such application in which such supports exists;

6.6. an identification of any cited references that may be disqualified under 35 USC 103(c).

REVIEW OF FACTS

The conditions set forth under section I. above are considered to have been met. However, the petition fails to comply with conditions set forth under section II. Items 5.2 and 5.3.

Regarding the requirement in item 5.2 and 5.3 above, the preexamination search document provided with the instant petition is deficient as follows: The US field of search and database searches which are to be provided under section 8(A) are not sufficient. In addition to the search areas provided, applicant would also need to search in the following class/ subclasses: 455/509 and 455/560.

If any request for reconsideration is filed, an updated preexamination search must be conducted as per items 5.2 and 5.3 above, and the Preexamination Search Document must be amended to indicate such; a new Information Disclosure Statement should be filed to cite any newly found prior art, and the Accelerated Examination Support Document must also be amended to include the necessary reference and discussion of any newly found and cited prior art in accordance with all of items 6 through 6.6 above; as well as the necessary updated discussion of patentability for each of the dependent claims (or a statement that claims stand or fall together) as set forth above.

DECISION

For the above-stated reasons, the petition is **dismissed**. The application will therefore be taken up by the examiner for action in its regular turn.

Petitioner is given a single opportunity to perfect the petition. Any request for reconsideration of this decision must be submitted within 1 (one) month or 30 (thirty) days, whichever is longer, (no extension of time under 37 CFR 1.136(a)) from the date of this decision in order to be considered timely. Any request for reconsideration must address the deficiencies indicated above.

Petitioner is reminded that, upon granting of the special status of the application on request for reconsideration, the application will be processed expeditiously. However, due to the dismissal of the instant petition, examination may not be completed within twelve months of the filing date of the application.

Any inquiry regarding this decision should be directed to Doris To, Quality Assurance Specialist, at (571) 272-7629.

/ Doris To /

Doris To
Quality Assurance Specialist
Technology Center 2600
Communications

UNITED STATES PATENT AND TRADEMARK OFFICE

UNITED STATES DEPARTMENT OF COMMERCE
United States Patent and Trademark Office
Address: COMMISSIONER FOR PATENTS
P.O. Box 1450
Alexandria, Virginia 22313-1450
www.uspto.gov

APPLICATION NO.	FILING DATE	FIRST NAMED INVENTOR	ATTORNEY DOCKET NO.	CONFIRMATION NO.
13/097,542	04/29/2011	Zhaojie Zhou	4202-12100	6734

97698 7590 06/22/2011

Huawei Technologies Co., Ltd.
c/o Conley Rose, P.C.
5601 Granite Parkway
Plano, TX 75024

EXAMINER	
YAO, KWANG BIN	
ART UNIT	PAPER NUMBER
2473	

MAIL DATE	DELIVERY MODE
06/22/2011	PAPER

Please find below and/or attached an Office communication concerning this application or proceeding.

The time period for reply, if any, is set in the attached communication.

United States Patent and Trademark Office

Commissioner for Patents
United States Patent and Trademark Office
P.O. Box 1450
Alexandria, VA 22313-1450
www.uspto.gov

Huawei Technologies Co., Ltd.
c/o Conley Rose, P.C.
5601 Granite Parkway
Plano TX 75024

In re Application of:
ZHOU, ZHAOJIE
Serial No.: 13/097,542
Filed: April 29, 2011
Attorney Docket No: **4202-12100**
Title: **DATA TRANSMISSION METHOD AND CORRESPONDING DEVICES**

DECISION ON PETITION TO MAKE SPECIAL FOR NEW APPLICATION UNDER 37 C.F.R. § 1.102 & M.P.E.P. § 708.02

This is a decision on the petition filed on June 15, 2011 requesting reconsideration to make the above-identified application special for accelerated examination procedure under 37 C.F.R. § 1.102(d).

All of the requirements to correct the deficiencies outlined in the petition decision mailed May 26, 2011 have been met.

The petition to make the application special is **GRANTED**.

The application is eligible for accelerated examination and the petition complies with the conditions for granting the application special status pursuant to the "Change to Practice for Petitions in Patent Applications to Make Special and for Accelerated Examination" published June 26, 2006, in the Federal Register. (71 Fed. Reg. 36323).

The prosecution of the instant application will be conducted expeditiously according to the following guidelines.

1. The application will be docketed to an examiner and taken up for action within two weeks of the date of this decision.

2. Restriction Practice:
   If the examiner determines that the claims are not directed to a single invention, a telephone request to elect one single invention will be made pursuant to MPEP 812.01. As a prerequisite to the grant of this petition, the applicant has agreed to make an oral election, by telephone, without traverse. If the applicant refuses to make an election without traverse, or the examiner cannot reach the applicant after a reasonable effort, the

examiner will treat the first claimed invention (invention defined by claim 1) as having being constructively elected without traverse for examination.

3. Office action:
If it is determined that, after appropriate consultation, there is a potential rejection or any other issue to be addressed, the examiner will telephone the applicant and arrange an interview to discuss and resolve the issue. An Office action, other than a Notice of Allowance and Fee(s) Due (Notice of Allowance), will not be issued unless either: 1) an interview was conducted but did not result in agreed to action that places the application in condition for allowance, or, 2) a determination is made that an interview would be unlikely to result in the application being placed in condition for allowance, and 3) an internal conference has been held to review any rejection of any claim.

4. Time for Reply:
An Office action other than a Notice of Allowance or a final Office action will set a shortened statutory period of one month or thirty days, whichever is longer, for reply with no extension of time available under 37 CFR 1.136(a). Failure to timely file a reply within this non-extendible period for reply will result in the abandonment of the application.

5. Reply by Applicant:
A timely reply to an Office action other than the Notice of Allowance must be submitted electronically via EFS or EFS-web and limited to addressing the rejections, objections and requirement made. Any amendment that attempts to: 1) add claims which would result in more than three pending independent claims or more than twenty pending total claims; 2) present claims not encompassed by the pre-examination search or an updated accelerated examination support document; or 3) present claims that are directed a non-elected invention or an invention other than that previously claimed and examined in the application, will be treated as not fully responsive and will not be entered.

   For any amendment to the claims (including any new claim) that is not encompassed by the accelerated examination support document, applicant must provide an updated accelerated examination support document that encompasses the amended or new claims at the time of filing of the amendment.

   To proceed expeditiously with the examination, it is recommended that a reply with amendments made to any claim or with any new claim being added be accompanied by an updated accelerated examination support document or a statement explaining how the amended or new claim is supported by the original accelerated examination support document.

6. Information Disclosure Statement (IDS):
Any IDS filed during prosecution must be submitted electronically via EFS or EFS-web, accompanied by an updated accelerated examination support document, and be in compliance with 37 CFR 1.97 and 1.98.

7. Post-Allowance Processing:
To expedite processing of the allowed application into a patent, the applicant must: 1) pay the required fees within one month of the date of the Notice of Allowance, and 2) not

file any post allowance papers not required by the Office. In no event may the issue fee be paid and accepted later than three months from the date of the Notice of Allowance.

8. After-Final and Appeal Procedures:
To expedite prosecution, after receiving the final Office action, applicant must: 1) promptly file a notice of appeal, an appeal brief and appeal fees; and 2) not request a pre-appeal brief conference.

   Any amendment, affidavit or other evidence filed after final Office action must comply with applicable rules and the requirements outlined in numbered paragraphs 5 and 6 above.

   On appeal, the application will proceed according to normal appeal procedures. After appeal, the application will again be treated special.

9. Proceedings Outside the Normal Examination Process:
If the application becomes involved in a proceeding that is outside the normal examination process (e.g., a secrecy order, national security review, interference proceeding, petitions under 37 CFR 1.181, 182 or 183), the application will be treated special before and after such proceeding.

10. Final Disposition:
The twelve month goal of this accelerated examination procedure ends with a final disposition. The mailing of a final Office action, a Notice of Allowance, the filing of a Notice of Appeal, or the filing of a Request for Continued Examination (RCE) is the final disposition.

If, during prosecution, a paper is not filed electronically using EFS-web, a reply is filed but is not fully responsive, the application is involved in an appeal or a proceeding outside normal examination process, the application will still be examined expeditiously, however, the final disposition may occur more than twelve months from the filing of the application.

Any inquiry regarding this decision should be directed to Doris To, Quality Assurance Specialist, at (571) 272-7629.

/Doris To/

Doris To
Quality Assurance Specialist
Technology Center 2600
Communications

Doc Code: PET.GREEN
Document Description: Petition for Green Tech Pilot

PTO/SB/420 (03-11)

PETITION TO MAKE SPECIAL UNDER THE GREEN TECHNOLOGY PILOT PROGRAM

Attorney Docket Number: 245602	Application Number (if known): 13/097616	Filing date: April 29, 2011

First Named Inventor: Wang, Wei-Wen

Title: HEAT EXCHANGER FOR A HEAT PUMP LAUNDRY DRYER

APPLICANT HEREBY REQUESTS TO PARTICIPATE IN THE GREEN TECHNOLOGY PILOT PROGRAM FOR THE ABOVE-IDENTIFIED APPLICATION. See Instruction Sheet on page 2.

This petition must be timely filed electronically using the USPTO electronic filing system, EFS-Web.

1. By filing this petition:

   Applicant is requesting early publication: Applicant hereby requests early publication under 37 CFR 1.219 and the publication fee set forth in 37 CFR 1.18(d) accompanies this request.

2. By filing this petition: applicant is agreeing to make an election without traverse in a telephonic interview and elect an invention that meets the eligibility requirements for the Green Technology Pilot Program, if the Office determines that the claims are not obviously directed to a single invention. See Instruction Sheet.

3. This request is accompanied by statements of special status for the eligibility requirement.

4. The application contains no more than three (3) independent claims and twenty (20) total claims.

5. The application does not contain any multiple dependent claims.

6. Other attachments: _____

Signature /Allison W. Mages/	Date November 16, 2011
Name (Print/Typed) Allison W. Mages	Registration Number 57275

Note: *Signatures of all the inventors or assignees of record of the entire interest or their representative(s) are required in accordance with 37 CFR 1.33 and 11.18. Please see 37 CFR 1.4(d) for the form of the signature. If necessary, submit multiple forms for more than one signature, see below*.*

☐ *Total of _____ forms are submitted.

If you need assistance in completing the form, call 1-800-PTO-9199 and select option 2.

Instruction Sheet for
Petition to Make Special Under the Green Technology Pilot Program

(Not to be Submitted to the USPTO)

The following is a summary of the requirements (for more information see the notices (i) "Pilot Program for Green Technologies Including Greenhouse Gas Reduction," (ii) "Elimination of Classification Requirement in the Green Technology Pilot Program," and (iii) "Expansion and Extension of the Green Technology Pilot Program," available on the USPTO web site at http://www.uspto.gov/patents/init_events/green_tech.jsp):

(1) The application must be a non-reissue, non-provisional utility application filed under 35 U.S.C. 111(a), or an international application that has entered the national stage in compliance with 35 U.S.C. 371, irrespective of the filing date of the application. Reexamination proceedings are excluded from this pilot program.

(2) The application must contain three or fewer independent claims and twenty or fewer total claims. The application must not contain any multiple dependent claims. For an application that contains more than three independent claims or twenty total claims, or multiple dependent claims, applicant must file a preliminary amendment in compliance with 37 CFR 1.121 to cancel the excess claims and/or the multiple dependent claims at the time the petition to make special is filed.

(3) The claims must be directed to a single invention that materially enhances the quality of the environment, or that materially contributes to: (1) the discovery or development of renewable energy resources; (2) the more efficient utilization and conservation of energy resources; or (3) green house gas emission reduction (see the eligibility requirements of sections II and III of the notice (i) cited above). The petition must include a statement that, if the USPTO determines that the claims are directed to multiple inventions (e.g., in a restriction requirement), applicant will agree to make an election without traverse in a telephonic interview, and elect an invention that meets the eligibility requirements in section II or III of the notice (i) cited above.

(4) The petition to make special must be timely filed electronically using the USPTO electronic filing system, EFS-Web, and selecting the document description of "Petition for Green Tech Pilot" on the EFS-Web screen. Applicant should use form PTO/SB/420, which is available as a Portable Document Format (PDF) fillable form in EFS-Web and on the USPTO Web site.

(5) The petition to make special must be filed at least one day prior to the date that a first Office action (which may be an Office action containing only a restriction requirement) appears in the Patent Application Information Retrieval (PAIR) system. Applicant may check the status of the application using PAIR.

(6) The petition to make special must be accompanied by a request for early publication in compliance with 37 CFR 1.219 and the publication fee set forth in 37 CFR 1.18(d).

Privacy Act Statement

The **Privacy Act of 1974 (P.L. 93-579)** requires that you be given certain information in connection with your submission of the attached form related to a patent application or patent. Accordingly, pursuant to the requirements of the Act, please be advised that: (1) the general authority for the collection of this information is 35 U.S.C. 2(b)(2); (2) furnishing of the information solicited is voluntary; and (3) the principal purpose for which the information is used by the U.S. Patent and Trademark Office is to process and/or examine your submission related to a patent application or patent. If you do not furnish the requested information, the U.S. Patent and Trademark Office may not be able to process and/or examine your submission, which may result in termination of proceedings or abandonment of the application or expiration of the patent.

The information provided by you in this form will be subject to the following routine uses:

1. The information on this form will be treated confidentially to the extent allowed under the Freedom of Information Act (5 U.S.C. 552) and the Privacy Act (5 U.S.C 552a). Records from this system of records may be disclosed to the Department of Justice to determine whether disclosure of these records is required by the Freedom of Information Act.
2. A record from this system of records may be disclosed, as a routine use, in the course of presenting evidence to a court, magistrate, or administrative tribunal, including disclosures to opposing counsel in the course of settlement negotiations.
3. A record in this system of records may be disclosed, as a routine use, to a Member of Congress submitting a request involving an individual, to whom the record pertains, when the individual has requested assistance from the Member with respect to the subject matter of the record.
4. A record in this system of records may be disclosed, as a routine use, to a contractor of the Agency having need for the information in order to perform a contract. Recipients of information shall be required to comply with the requirements of the Privacy Act of 1974, as amended, pursuant to 5 U.S.C. 552a(m).
5. A record related to an International Application filed under the Patent Cooperation Treaty in this system of records may be disclosed, as a routine use, to the International Bureau of the World Intellectual Property Organization, pursuant to the Patent Cooperation Treaty.
6. A record in this system of records may be disclosed, as a routine use, to another federal agency for purposes of National Security review (35 U.S.C. 181) and for review pursuant to the Atomic Energy Act (42 U.S.C. 218(c)).
7. A record from this system of records may be disclosed, as a routine use, to the Administrator, General Services, or his/her designee, during an inspection of records conducted by GSA as part of that agency's responsibility to recommend improvements in records management practices and programs, under authority of 44 U.S.C. 2904 and 2906. Such disclosure shall be made in accordance with the GSA regulations governing inspection of records for this purpose, and any other relevant (*i.e.*, GSA or Commerce) directive. Such disclosure shall not be used to make determinations about individuals.
8. A record from this system of records may be disclosed, as a routine use, to the public after either publication of the application pursuant to 35 U.S.C. 122(b) or issuance of a patent pursuant to 35 U.S.C. 151. Further, a record may be disclosed, subject to the limitations of 37 CFR 1.14, as a routine use, to the public if the record was filed in an application which became abandoned or in which the proceedings were terminated and which application is referenced by either a published application, an application open to public inspection or an issued patent.
9. A record from this system of records may be disclosed, as a routine use, to a Federal, State, or local law enforcement agency, if the USPTO becomes aware of a violation or potential violation of law or regulation.

UNITED STATES PATENT AND TRADEMARK OFFICE

UNITED STATES DEPARTMENT OF COMMERCE
United States Patent and Trademark Office
Address: COMMISSIONER FOR PATENTS
P.O. Box 1450
Alexandria, Virginia 22313-1450
www.uspto.gov

APPLICATION NO.	FILING DATE	FIRST NAMED INVENTOR	ATTORNEY DOCKET NO.	CONFIRMATION NO.
13/097,616	04/29/2011	Wei-Wen Wang	245602/GECA-82	6892

99491 7590 12/07/2011

Dority and Manning, P.A and General
Electric-Appliance and Lighting
PO Box 1449
greenville, SC 29602

EXAMINER	
ART UNIT	PAPER NUMBER
3743	

MAIL DATE	DELIVERY MODE
12/07/2011	PAPER

Please find below and/or attached an Office communication concerning this application or proceeding.

The time period for reply, if any, is set in the attached communication.

UNITED STATES PATENT AND TRADEMARK OFFICE

Commissioner for Patents
United States Patent and Trademark Office
P.O. Box 1450
Alexandria, VA 22313-1450
www.uspto.gov

Dority and Manning, P.A and General
Electric-Appliance and Lighting
PO Box 1449
Greenville SC 29602

In re Application of		
WANG, WEI-WEN	:	DECISION ON PETITION
Application No. 13/097,616	:	TO MAKE SPECIAL UNDER
Filed: April 29, 2011	:	THE GREEN TECHNOLOGY
Attorney Docket No. 245602/GECA-82	:	PILOT PROGRAM

This is a decision on the petition under 37 CFR 1.102, filed November 16, 2011, to make the above-identified application special under the pilot program for applications pertaining to Green Technologies as set forth in 74 Federal Register Notice 64666 (December 8, 2009) and amended by 75 Federal Register Notice 28554 (May 21, 2010) and 75 Federal Register Notice 69049 (November 10, 2010).

The petition is **granted**.

A grantable petition to make an application special under 37 CFR 1.102 and the pilot program as set forth in 74 FR 64666 must be directed to a nonprovisional application filed under 35 USC 111(a) or be a national stage entry under 35 USC 371, exclusive of any reissue applications.

If reconsideration of this decision is desired, a petition for reconsideration must be filed within ONE (1) MONTH OR THIRTY (30) DAYS from the mail date of this decision, whichever is longer. No extension of this time limit can be granted under 37 CFR 1.136(a) or (b). The petition for reconsideration should include an exhaustive attempt to provide the lacking item(s) noted below, since, after a decision on the petition for reconsideration, no further reconsideration or review of the matter will be undertaken by the Director.

In order to qualify for special status, the following requirements must be met. 1) The application must have no more than 3 independent claims and no more than 20 total claims. 2) The application must not contain any multiple dependent claims. 3) The petition must state the basis for seeking special status, i.e., the claimed invention either: A) materially enhances the quality of the environment or B) materially contributes to: i) the discovery or development of renewable energy resources, ii) the more efficient utilization and conservation of energy resources, or iii) greenhouse gas emission reduction. 4) If the disclosure is not clear on its face that the claimed invention materially contributes under category (A) or (B), the petition must be accompanied by

a statement by the applicant, assignee, or an attorney/agent registered to practice before the Office explaining how the materiality standard is met. 5) A statement that applicant will agree to make an election without traverse in a telephonic interview if a restriction requirement is made by the examiner. 6) The petition to make special must be filed electronically. 7) The petition must be filed at least one day prior to the date that a first Office Action appears in the Patent Application Information Retrieval (PAIR) system. 8) The petition must be accompanied by a request for early publication in compliance with 37 CFR 1.219 and include the publication fee as set forth in 37 CFR 1.18(d).

The requirement for a fee for consideration of the petition to make special for applications pertaining to Green Technologies has been waived.

The instant petition complies with items 1 – 8 above. Accordingly, the above-identified application has been accorded "special" status.

Telephone inquires concerning this decision should be directed to Henry C. Yuen at 571-272-4856.

This application will be forwarded to the Technology Center Art Unit 3743 for action on the merits commensurate with this decision.

/Henry C. Yuen/

Henry C. Yuen
Quality Assurance Specialist
Technology Center TC 3700

UNITED STATES PATENT AND TRADEMARK OFFICE

UNITED STATES DEPARTMENT OF COMMERCE
United States Patent and Trademark Office
Address: COMMISSIONER FOR PATENTS
P.O. Box 1450
Alexandria, Virginia 22313-1450
www.uspto.gov

APPLICATION NO.	FILING DATE	FIRST NAMED INVENTOR	ATTORNEY DOCKET NO.	CONFIRMATION NO.
13/097,662	04/29/2011	Larry CROCHET	3557-109	6977

6449 7590 08/18/2011

ROTHWELL, FIGG, ERNST & MANBECK, P.C.
1425 K STREET, N.W.
SUITE 800
WASHINGTON, DC 20005

EXAMINER
VU, KIEU D

ART UNIT	PAPER NUMBER
2173	

NOTIFICATION DATE	DELIVERY MODE
08/18/2011	ELECTRONIC

Please find below and/or attached an Office communication concerning this application or proceeding.

The time period for reply, if any, is set in the attached communication.

Notice of the Office communication was sent electronically on above-indicated "Notification Date" to the following e-mail address(es):

PTO-PAT-Email@rfem.com

UNITED STATES PATENT AND TRADEMARK OFFICE

Commissioner for Patents
United States Patent and Trademark Office
P.O. Box 1450
Alexandria, VA 22313-1450
www.uspto.gov

ROTHWELL, FIGG, ERNST & MANBECK, P.C.
1425 K STREET, N.W.
SUITE 800
WASHINGTON DC 20005

In re Application of:
CROCHET, Larry et al.
Application No. 13/097,662
Filed: April 29, 2011
For: **SYSTEMS AND METHODS FOR SEMANTIC SEARCH, CONTENT CORRELATION AND VISUALIZATION**

DECISION ON PETITION UNDER 37 C.F.R. § 1.84(a)(2) TO ACCEPT COLOR DRAWINGS

This is a decision on the petition under 37 C.F.R. § 1.84(a)(2), filed on Aril 29, 2011, requesting acceptance of color drawings.

The petition requests that the color drawings of Figures 2A-2E and 4-10 be accepted in lieu of black and white drawings.

A grantable petition under 37 C.F.R. § 1.84(a)(2) must be accompanied by a fee set forth under 37 C.F.R. § 1.17(h), 3 (three) sets of the color drawings in question, and the specification must contain, or be amended to contain, the following language as the first paragraph in that portion of the specification relating to the brief description of the drawings:

"The patent or application file contains at least one drawing executed in color. Copies of this patent or patent application publication with color drawings will be provided by the U.S. Patent and Trademark Office upon request and payment of the necessary fee."

The petition was filed with the required fee and was filed with one set of color drawing Figures 2A-2E and 4-10, filed EFS-Web, which is acceptable. Paragraph [0059] of the specification contains the required notification described above.

Accordingly, the petition is **GRANTED**.

Any inquiry regarding this decision should be directed to Eddie C. Lee at (571) 272-1732.

/Eddie C. Lee/

Eddie C. Lee
Quality Assurance Specialist, TC 2100

UNITED STATES PATENT AND TRADEMARK OFFICE

Commissioner for Patents
United States Patent and Trademark Office
P.O. Box 1450
Alexandria, VA 22313-1450
www.uspto.gov

DRINKER BIDDLE & REATH (DC)
1500 K STREET, N.W.
SUITE 1100
WASHINGTON DC 20005-1209

MAILED
APR 03 2012
OFFICE OF PETITIONS

In re Application of:
Nagatsuka et al.
Application No. 13/097,717
Filed: April 29, 2011
Attorney Docket No. 047260-5140 (468256)

: DECISION ON REQUEST TO
: PARTICIPATE IN THE PATENT
: PROSECUTION HIGHWAY
: PROGRAM AND PETITION
: TO MAKE SPECIAL UNDER
: 37 CFR 1.102(a)

This is a decision on the request to participate in the Patent Prosecution Highway (PPH) program and the petition under 37 CFR 1.102(a), filed January 13, 2012, to make the above-identified application special.

The request and petition are **GRANTED**.

Discussion

A grantable request to participate in the PPH pilot program and petition to make special require:

1. The U.S. application is

   a. a Paris Convention application which either
      i. validly claims priority under 35 U.S.C. 119(a) and 37 CFR 1.55 to one or more applications filed in the JPO, or
      ii. validly claims priority to a PCT application that contains no priority claims, or
   b. a national stage application under the PCT (an application which entered the national stage in the U.S. from a PCT international application after compliance with 35 U.S.C. 371), which PCT application
      i. validly claims priority to an application filed in the JPO, or
      ii. validly claims priority to a PCT application that contains no priority claims, or
      iii. contains no priority claim, or
   c. a so-called bypass application filed under 35 U.S.C. 111(a) which validly claims benefit under 35 U.S.C. 120 to a PCT application, which PCT application
      i. validly claims priority to an application filed in the JPO, or
      ii. validly claims priority to a PCT application that contains no priority claims, or

iii. contains no priority claim;

2. Applicant must submit a copy of:
   a. The allowable/patentable claim(s) from the JPO application(s);
   b. An English translation of the allowable/patentable claim(s) and
   c. A statement that the English translation is accurate; (if the claims were published in a language other than English);
3. Applicant must:
   a. Ensure all the claims in the U.S. application must sufficiently correspond or be amended to sufficiently correspond to the allowable/patentable claim(s) in the JPO application(s) and
   b. Submit a claims correspondence table in English;
4. Examination of the U.S. application has not begun;
5. Applicant must submit:
   a. A copy of all the office actions (which are relevant to patentability), excluding "Decision to Grant a Patent" from each of the JPO application(s) containing the allowable/patentable claim(s);
   b. An English language translation of the JPO office action; and
   c. A statement that the English translation is accurate (if the office actions are not in the English language);
6. Applicant must submit:
   d. An IDS listing the documents cited by the JPO examiner in the JPO office action (unless already submitted in this application)
   e. Copies of the documents cited in the JPO office action, except U.S. patents or U.S. patent application publications (unless already submitted in this application);

The request to participate in the PPH pilot program and petition comply with the above requirements. Accordingly, the above-identified application has been accorded "special" status.

Inquiries concerning this decision should be directed to Joan Olszewski at 571-272-7751.

All other inquiries concerning the examination or status of the application is accessible in the PAIR system at http://www.uspto.gov/ebc.index.html.

This application will be forwarded to the examiner for action on the merits commensurate with this decision once this application's formality reviews have been completed.

/dab/
David Bucci
Petitions Examiner
Office of Petitions

UNITED STATES PATENT AND TRADEMARK OFFICE

UNITED STATES DEPARTMENT OF COMMERCE
United States Patent and Trademark Office
Address: COMMISSIONER FOR PATENTS
P.O. Box 1450
Alexandria, Virginia 22313-1450
www.uspto.gov

APPLICATION NO.	FILING DATE	FIRST NAMED INVENTOR	ATTORNEY DOCKET NO.	CONFIRMATION NO.
13/097,746	04/29/2011	Larry CROCHET	3557-110	7146

6449 7590 06/24/2011

ROTHWELL, FIGG, ERNST & MANBECK, P.C.
1425 K STREET, N.W.
SUITE 800
WASHINGTON, DC 20005

EXAMINER	
ART UNIT	PAPER NUMBER
2178	

NOTIFICATION DATE	DELIVERY MODE
06/24/2011	ELECTRONIC

Please find below and/or attached an Office communication concerning this application or proceeding.

The time period for reply, if any, is set in the attached communication.

Notice of the Office communication was sent electronically on above-indicated "Notification Date" to the following e-mail address(es):

PTO-PAT-Email@rfem.com

UNITED STATES PATENT AND TRADEMARK OFFICE

Commissioner for Patents
United States Patent and Trademark Office
P.O. Box 1450
Alexandria, VA 22313-1450
www.uspto.gov

ROTHWELL, FIGG, ERNST & MANBECK, P.C.
1425 K STREET, N.W.
SUITE 800
WASHINGTON DC 20005

In re Application of:
CROCHET, Larry et al.
Application No. 13/097,746
Filed: April 29, 2011
For: **SYSTEMS AND METHODS FOR SEMANTIC SEARCH, CONTENT CORRELATION AND VISUALIZATION**

DECISION ON PETITION UNDER 37 C.F.R. § 1.84(a)(2) TO ACCEPT COLOR DRAWINGS

This is a decision on the petition under 37 C.F.R. § 1.84(a)(2), filed on April 29, 2011, requesting acceptance of color drawings.

The petition requests that the color drawings of Figures 1-2E and 4-10 be accepted in lieu of black and white drawings.

A grantable petition under 37 C.F.R. § 1.84(a)(2) must be accompanied by a fee set forth under 37 C.F.R. § 1.17(h), 3 (three) sets of the color drawings in question, and the specification must contain, or be amended to contain, the following language as the first paragraph in that portion of the specification relating to the brief description of the drawings:

"The patent or application file contains at least one drawing executed in color. Copies of this patent or patent application publication with color drawings will be provided by the U.S. Patent and Trademark Office upon request and payment of the necessary fee."

The petition was filed with the required fee and was filed with three (3) sets of color drawing Figures 1-2E and 4-10. Paragraph [0059] of the specification contains the required notification described above.

Accordingly, the petition is **GRANTED**.

Any inquiry regarding this decision should be directed to Eddie C. Lee at (571) 272-1732.

/Eddie C. Lee/

Eddie C. Lee
Quality Assurance Specialist, TC 2100

Doc Code: PET.GREEN
Document Description: Petition for Green Tech Pilot

PTO/SB/420 (03-11)

PETITION TO MAKE SPECIAL UNDER THE GREEN TECHNOLOGY PILOT PROGRAM

Attorney Docket Number: 249749-1	Application Number (if known): 13/097,808	Filing date: April 29, 2011

First Named Inventor: Fulton Jose Lopez

Title: LOAD EQUALIZED GEAR SYSTEM AND METHOD FOR USING SAME

APPLICANT HEREBY REQUESTS TO PARTICIPATE IN THE GREEN TECHNOLOGY PILOT PROGRAM FOR THE ABOVE-IDENTIFIED APPLICATION. See Instruction Sheet on page 2.

This petition must be timely filed electronically using the USPTO electronic filing system, EFS-Web.

1. By filing this petition:

   Applicant is requesting early publication: Applicant hereby requests early publication under 37 CFR 1.219 and the publication fee set forth in 37 CFR 1.18(d) accompanies this request.

2. By filing this petition: applicant is agreeing to make an election without traverse in a telephonic interview and elect an invention that meets the eligibility requirements for the Green Technology Pilot Program, if the Office determines that the claims are not obviously directed to a single invention. See Instruction Sheet.

3. This request is accompanied by statements of special status for the eligibility requirement.

4. The application contains no more than three (3) independent claims and twenty (20) total claims.

5. The application does not contain any multiple dependent claims.

6. Other attachments: Statement Concerning the Basis for the Special Status

Signature /Allison W. Mages/	Date October 19, 2011
Name (Print/Typed) Allison W. Mages	Registration Number 57,275

Note: Signatures of all the inventors or assignees of record of the entire interest or their representative(s) are required in accordance with 37 CFR 1.33 and 11.18. Please see 37 CFR 1.4(d) for the form of the signature. If necessary, submit multiple forms for more than one signature, see below.*

☐ *Total of _____ forms are submitted.

If you need assistance in completing the form, call 1-800-PTO-9199 and select option 2.

IN THE UNITED STATES PATENT AND TRADEMARK OFFICE

First Named Inventor: Fulton Jose Lopez	)
Confirmation No.: 7285	)
	)
Serial No.: 13/097,808	)
	)
Filing Date: April 29, 2011	)
	)
Atty Docket No.: 249749-1	)

VIA EFS
Commissioner for Patents
P.O. Box 1450
Alexandria, VA 22313-1450

Statement Concerning the Basis for the Special Status

SIR:

The present application relates to a gear system that incorporates planet and sun gears, and more particularly, to a gear system with a balanced load between the planet gears. Planetary gear systems, such as system 10, find use in applications such as wind turbines (See [0001], [0003]).

Applicant respectfully submits that Special Status is sought on the basis that the present invention materially contributes to the discovery or development of renewable energy resources.

The undersigned representative may be contacted at the number below to facilitate the resolution of any matters. Please charge any fees that are incurred in connection with this Statement to deposit account no. 09-0470.

Respectfully submitted,

General Electric Company

By : /Allison W. Mages/
Allison W. Mages
Reg. No. 57,275

Dated: October 19, 2011

GE Global Patent Operation
2 Corporate Drive, Suite 648
Shelton, CT 06484
203-944-6730

UNITED STATES PATENT AND TRADEMARK OFFICE

UNITED STATES DEPARTMENT OF COMMERCE
United States Patent and Trademark Office
Address: COMMISSIONER FOR PATENTS
P.O. Box 1450
Alexandria, Virginia 22313-1450
www.uspto.gov

APPLICATION NO.	FILING DATE	FIRST NAMED INVENTOR	ATTORNEY DOCKET NO.	CONFIRMATION NO.
13/097,808	04/29/2011	Fulton Jose Lopez	249749-1	7285

6147 7590 11/07/2011

GENERAL ELECTRIC COMPANY
GLOBAL RESEARCH
ONE RESEARCH CIRCLE
BLDG. K1-3A59
NISKAYUNA, NY 12309

EXAMINER	
LE, DAVID D	
ART UNIT	**PAPER NUMBER**
3655	

NOTIFICATION DATE	DELIVERY MODE
11/07/2011	ELECTRONIC

Please find below and/or attached an Office communication concerning this application or proceeding.

The time period for reply, if any, is set in the attached communication.

Notice of the Office communication was sent electronically on above-indicated "Notification Date" to the following e-mail address(es):

ldocket@crd.ge.com
wahld@ge.com
haeckl@ge.com

UNITED STATES PATENT AND TRADEMARK OFFICE

Commissioner for Patents
United States Patent and Trademark Office
P.O. Box 1450
Alexandria, VA 22313-1450
www.uspto.gov

NOV 04 2011

GENERAL ELECTRIC COMPANY
GLOBAL RESEARCH
ONE RESEARCH CIRCLE
BLDG. K1-3A59
NISKAYUNA NY 12309

In re Application of	:	
FULTON LOPEZ et al.	:	DECISION ON PETITION
Application No. 13/097,808	:	TO MAKE SPECIAL UNDER
Filed: April 29, 2011	:	THE GREEN TECHNOLOGY
Attorney Docket No. 249749-1	:	PILOT PROGRAM

This is a decision on the petition under 37 CFR 1.102, filed October 19, 2011 to make the above-identified application special under the pilot program for applications pertaining to Green Technologies as set forth in 74 Federal Register Notice 64666 (December 8, 2009) and amended by 75 Federal Register Notice 28554 (May 21, 2010) and 75 Federal Register Notice 69049 (November 10, 2010).

The petition is **DISMISSED**.

If reconsideration of this decision is desired, a petition for reconsideration must be filed within ONE (1) MONTH OR THIRTY (30) DAYS from the mail date of this decision, whichever is longer. No extension of this time limit can be granted under 37 CFR 1.136(a) or (b). The petition for reconsideration should include an exhaustive attempt to provide the lacking item(s) noted below, since, after a decision on the petition for reconsideration, no further reconsideration or review of the matter will be undertaken by the Director.

A grantable petition to make an application special under 37 CFR 1.102 and the pilot program as set forth in 74 FR 64666 must be directed to a nonprovisional application filed under 35 USC 111(a) or be a national stage entry under 35 USC 371, exclusive of any reissue applications.

In order to qualify for special status, the following requirements must be met. 1) The application must have no more than 3 independent claims and no more than 20 total claims. 2) The application must not contain any multiple dependent claims. 3) The petition must state the basis for seeking special status, i.e., the claimed invention either: A) materially enhances the quality of the environment or B) materially contributes to: i) the discovery or development of renewable energy resources, ii) the more efficient utilization and conservation of energy resources, or iii) greenhouse gas emission reduction. 4) If the disclosure is not clear on its face that the claimed invention materially contributes under category (A) or (B), the petition must be accompanied by a statement by the applicant, assignee, or an

attorney/agent registered to practice before the Office explaining how the materiality standard is met. 5) A statement that applicant will agree to make an election without traverse in a telephonic interview if a restriction requirement is made by the examiner. 6) The petition to make special must be filed electronically. 7) The petition must be filed at least one day prior to the date that a first Office Action appears in the Patent Application Information Retrieval (PAIR) system. 8) The petition must be accompanied by a request for early publication in compliance with 37 CFR 1.219 and include the publication fee as set forth in 37 CFR 1.18(d).

The requirement for a fee for consideration of the petition to make special for applications pertaining to Green Technologies has been waived.

The petition lacks item 4.

In regard to item 4, there is no disclosure on how the claimed carrier/planetary gear system and method for balancing a load on a planetary gear system fits in a wind turbine so it is unclear in what manner the claimed carrier/planetary gear system and method materially contribute to the discovery or development of renewable energy resources. As a wind turbine is not claimed and application of the claimed carrier/planetary gear system and method in a wind turbine is merely an intended use, petitioner's assertion of the claimed invention's contribution to the discovery or development of renewable energy resources is entirely speculative. As stated in the notice, the materiality standard does not permit an applicant to speculate as to how a hypothetical end-user might specially apply the invention in a manner than could materially contribute to category (A) or (B). *Also see MPEP § 708.02 (VI).* Accordingly, it is not agreed that the application on its face meets that materiality standard.

Any reconsideration of this decision should be submitted through the USPTO electronic filing system, EFS-Web, and selecting the document description of "Petition for Green Tech Pilot" on the EFS-Web screen.

Telephone inquiries concerning this decision should be directed to Lanna Mai at 571-272-6867.

The application is being forwarded to the Technology Center Art Unit 3655 for action in its regular turn.

/Lanna Mai/

Lanna Mai
Quality Assurance Specialist
Technology Center 3600

IN THE UNITED STATES PATENT AND TRADEMARK OFFICE

First Named Inventor: Fulton Jose LOPEZ	)
Confirmation No.: 7285	)
	)
Serial No.: 13/097,808	)
	)
Filing Date: 04-29-2011	)
	)
Atty Docket No.: 249749-1	)

Commissioner for Patents
P.O. Box 1450
Alexandria, VA 22313-1450

Request for Reconsideration

SIR:

This is responsive to the Decision on Petition, dated as mailed 7 November 2011, in the above-referenced application.

Applicant respectfully requests reconsideration of Applicant's Petition to Make Special on the basis that the present invention materially contributes to the development of renewable energy resources or energy conservation.

The Decision to Make Special Under the Green Technology Pilot Program (hereinafter "the Decision") alleges there is no disclosure on how the claimed carrier/planetary gear system and method for balancing a load on a planetary gear system fits in a wind turbine, so it is unclear in what manner the claimed carrier/planetary gear system and method materially contribute to the discovery or development of renewable energy resources. The Decision further alleges that, as a wind turbine is not claimed and application of the claimed carrier/planetary gear system and method in a wind turbine is merely an intended use, Applicant's assertion of the claimed invention's contribution to the discovery or development of renewable energy resources is entirely speculative. Applicant does not agree with the comments made in the Decision.

Applicant respectfully submits that the use of the claimed invention with a wind turbine, and thus the present invention's material contribution to the development of renewable energy resources or energy conservation, is not merely speculative. As noted in the present application, planetary gear systems find use in applications such as wind turbines. (see at least paragraph [0003]). As such, Applicant respectfully submits that use of the claimed invention with a wind turbine is not a speculative use.

Applicant respectfully submits that the present invention relates generally to a gear system that incorporates planet and sun gears, and more particularly, to a gear system with a balanced load between the planet gears. (see at least paragraph [0001]). While wind power is considered one of the cleanest, most environmentally friendly energy sources presently available, the availability of wind energy as a viable power generating option heavily depends on the cost/benefit economics of wind energy. As such, it is important that the cost of producing the energy, including the costs of installation and maintenance of the wind turbines, cannot outweigh the benefits.

For planetary gear systems utilizing multiple planet gears, a problem that has developed is the creation of an unbalanced load between the planet gears. For a variety of reasons planetary gear systems often suffer from unbalanced loads. (see at least paragraph [0004]).

One reason is that the gear teeth of the planetary gears are manufactured with a normal variance for such teeth. For example, the thickness of the gear teeth G_W may vary to an extent expected of tolerances for gear teeth. Additionally, the pitch – the distance between adjacent gear teeth – also may

vary. (see at least paragraph [0005]). Another reason is due to an inherent difficulty in properly position openings in the carrier that become the anchoring points for the planet gears. This difficulty is especially true for large carriers, such as those used in wind turbine gear systems. The equipment used to form openings, or planet pin bore holes, within large carriers does not have the accuracy to form and locate the openings with the amount of precision and cost desired. (see at least paragraph [0006]). An offset of the true positions of the planet gears from the desired positions of the planet gears can also lead to a load imbalance between the planet gears. (see at least paragraph [0007]).

Known attempts at creating a planetary gear system with a balanced load between individual planet gears have focused on reducing the stiffness of the carrier, thereby reducing the stiffness of the planetary gear system as a whole. Under normal manufacturing practices, the carrier bore hole when drilled will end up away from its centric true position. This is due to manufacturing tolerance limitations, complexity of the machined part, measuring capability, and human error. This scenario causes each planet gear to carry a load different from what they are designed for. Also, under normal loading conditions, the carrier may twist slightly. This twist may contribute to the misalignment between the planet gears and the ring gear/sun gear assembly. Depending on the number of planets and their respective tolerances, loads experienced by any single planet can increase dramatically, as much as 2X or more. (see at least paragraphs [0011]-[0012]).

Embodiments of the present invention include a carrier for use in a planetary gear system and having a plurality of openings or slots offset from a midline thereof. The carrier includes alignment mechanisms positioned in each of the plurality of openings or slots to substantially align each planet gear about the midline of the carrier. The embodiments of the invention enable an increase in torque capacity, as well as an improved load distribution, for a planetary gearbox. Further, these enhancements are enabled with a minimum of overall mass impact on the gearbox. (see at least paragraph [0015]).

By providing an increase in torque capacity and a more balanced load distribution, embodiments of the present invention allow for planetary gear system components to bear greater loads. This results in an increase in the operational life of the planetary gear system and improves the overall reliability of the system. As related to wind turbines, this also improves the operational reliability of the entire turbine. Embodiments of the present invention also provide reduced costs of manufacturing planetary gear systems by allowing for the provision of smaller system components. By reducing costs associated with the planetary gear systems, embodiments of the present invention reduce the overall manufacturing costs of a wind turbine, which in turn increases the availability of wind energy as a viable power generating option. Based on the above, it is respectfully submitted that embodiments of the present invention promote increased production of renewable energy resources and renewable energy.

The undersigned attorney may be contacted at the number below to facilitate the resolution of any matters. Please charge any fees that are incurred in connection with this Statement to deposit account no. 09-0470.

Respectfully submitted,

General Electric Company

By : /Allison W Mages/
Allison Weiner Mages
Reg. No. 57,275

Dated: December 6, 2011

GE Global Patent Operation
2 Corporate Drive, Suite 648
Shelton, CT 06484
203-944-6730

UNITED STATES PATENT AND TRADEMARK OFFICE

UNITED STATES DEPARTMENT OF COMMERCE
United States Patent and Trademark Office
Address: COMMISSIONER FOR PATENTS
P.O. Box 1450
Alexandria, Virginia 22313-1450
www.uspto.gov

APPLICATION NO.	FILING DATE	FIRST NAMED INVENTOR	ATTORNEY DOCKET NO.	CONFIRMATION NO.
13/097,808	04/29/2011	Fulton Jose Lopez	249749-1	7285

6147 7590 12/15/2011

GENERAL ELECTRIC COMPANY
GLOBAL RESEARCH
ONE RESEARCH CIRCLE
BLDG. K1-3A59
NISKAYUNA, NY 12309

EXAMINER	
LE, DAVID D	
ART UNIT	**PAPER NUMBER**
3655	

NOTIFICATION DATE	DELIVERY MODE
12/15/2011	ELECTRONIC

Please find below and/or attached an Office communication concerning this application or proceeding.

The time period for reply, if any, is set in the attached communication.

Notice of the Office communication was sent electronically on above-indicated "Notification Date" to the following e-mail address(es):

ldocket@crd.ge.com
wahld@ge.com
haeckl@ge.com

UNITED STATES PATENT AND TRADEMARK OFFICE

Commissioner for Patents
United States Patent and Trademark Office
P.O. Box 1450
Alexandria, VA 22313-1450
www.uspto.gov

GENERAL ELECTRIC COMPANY
GLOBAL RESEARCH
ONE RESEARCH CIRCLE
BLDG. K1-3A59
NISKAYUNA NY 12309

12/15/2011

In re Application of	:	
Lopez et al.	:	DECISION ON PETITION
Application No. 13/097,808	:	TO MAKE SPECIAL UNDER
Filed: 4/29/2011	:	THE GREEN TECHNOLOGY
Attorney Docket No. **249749-1**	:	PILOT PROGRAM

This is a decision on the request for reconsideration filed 12/6/2011, to make the above-identified application special under the pilot program for applications pertaining to Green Technologies as set forth in 74 Federal Register Notice 64666 (December 8, 2009) and amended by 75 Federal Register Notice 28554 (May 21, 2010) and 75 Federal Register Notice 69049 (November 10, 2010).

The petition is **GRANTED**.

A grantable petition to make an application special under 37 CFR 1.102 and the pilot program as set forth in 74 FR 64666 must be directed to a nonprovisional application filed under 35 USC 111(a) or be a national stage entry under 35 USC 371, exclusive of any reissue applications.

In order to qualify for special status, the following requirements must be met. 1) The application must have no more than 3 independent claims and no more than 20 total claims. 2) The application must not contain any multiple dependent claims. 3) The petition must state the basis for seeking special status, i.e., the claimed invention either: A) materially enhances the quality of the environment or B) materially contributes to: i) the discovery or development of renewable energy resources, ii) the more efficient utilization and conservation of energy resources, or iii) greenhouse gas emission reduction. 4) If the disclosure is not clear on its face that the claimed invention materially contributes under category (A) or (B), the petition must be accompanied by a statement by the applicant, assignee, or an attorney/agent registered to practice before the Office explaining how the materiality standard is met. 5) A statement that applicant will agree to make an election without traverse in a telephonic interview if a restriction requirement is made by the examiner. 6) The petition to make special must be filed electronically. 7) The petition must be filed at least one day prior to the date that a first Office Action appears in the Patent Application Information Retrieval (PAIR) system. 8) The petition must be accompanied by a

request for early publication in compliance with 37 CFR 1.219 and include the publication fee as set forth in 37 CFR 1.18(d).

The requirement for a fee for consideration of the petition to make special for applications pertaining to Green Technologies has been waived.

The instant petition complies with items 1 – 8 above. Accordingly, the above-identified application has been accorded "special" status.

Telephone inquires concerning this decision should be directed to Tom Dunn at 571-272-1171.

The application is being forwarded to the Technology Center Art Unit 3655 for action on the merits commensurate with this decision.

/Tom Dunn/

Tom Dunn
Quality Assurance Specialist
Technology Center 1700

UNITED STATES PATENT AND TRADEMARK OFFICE

UNITED STATES DEPARTMENT OF COMMERCE
United States Patent and Trademark Office
Address: COMMISSIONER FOR PATENTS
P.O. Box 1450
Alexandria, Virginia 22313-1450
www.uspto.gov

APPLICATION NO.	FILING DATE	FIRST NAMED INVENTOR	ATTORNEY DOCKET NO.	CONFIRMATION NO.
13/097,837	04/29/2011	Kemal Schankereli	SCHANK-THIN-PROCESS	7353

50438 7590 07/25/2011

JUNEAU PARTNERS
333 N Fairfax St.
Suite 305
ALEXANDRIA, VA 22314

EXAMINER	
ART UNIT	PAPER NUMBER
1742	

MAIL DATE	DELIVERY MODE
07/25/2011	PAPER

Please find below and/or attached an Office communication concerning this application or proceeding.

The time period for reply, if any, is set in the attached communication.

UNITED STATES PATENT AND TRADEMARK OFFICE

Commissioner for Patents
United States Patent and Trademark Office
P.O. Box 1450
Alexandria, VA 22313-1450
www.uspto.gov

7/25/11 CST

In re application of Kemal Schankereli Serial No. 13/097,837 Filed: April 29, 2011 For: THIN COLLAGEN TISSUE FOR MEDICAL DEVICE APPLICATIONS	:	DECISION ON PETITION TO MAKE SPECIAL

This is a decision on the petition filed on April 29, 2011 to make the above-identified application special under the accelerated examination program.

The petition to make the application special is **DISMISSED.**

REGULATION AND PRACTICE

A grantable petition to make special under 37 C.F.R. § 1.102(d) and pursuant to the "Change to Practice for Petitions in Patent Applications to Make Special and for Accelerated Examination" published in the Federal Register on June 26, 2006 (71 Fed. Reg. 36323), must satisfy the following conditions:

I. Conditions Regarding the Application:

1. the application must be a non-reissue utility or design application filed under 37 CFR 1.111(a);

2. the application, the petition and the required fees must be filed electronically using the USPTO's electronic filing system (EFS), or EFS-web; if not filed electronically, a statement asserting that EFS and EFS-web were not available during the normal business hours;

3. at the time of filing, the application must be complete under 37 CFR 1.51 and in condition for examination;

4. the application must contain three or fewer independent claims and twenty or fewer total claims and the claims must be directed to a single invention.

II. Conditions Regarding the Petition:

The petition must:

1. be filed with the application;

2. include a statement that applicant agrees not to separately argue the patentability of any dependent claim during any appeal in the application;

3. include a statement that applicant agrees to make an election without traverse in a telephone interview;

4. include a statement that applicant agrees to conduct such an interview when requested by the examiner;

5. include a statement, made based on a good faith belief, that a preexamination search in compliance with the following requirements, was conducted, including an identification of the field of search by United States class and subclass, where applicable, and for database searches, the search logic or chemical structure or sequence used as a query, the name of the file(s) searched and the database service, and the date of the search.

The preexamination search must:

5.1 involve U.S. patents and patent application publications, foreign patent documents, and non-patent literature, unless the applicant can justify with reasonable certainty that no references more pertinent than those already identified are likely to be found in the eliminated sources and includes such a justification with this statement;

5.2. be directed to the claimed invention and encompass all of the features of the claims, giving the claims the broadest reasonable interpretation;

5.3. encompass the disclosed features that may be claimed.

6. must provide in support of the petition an accelerated examination support document.

An accelerated examination support document must include:

6.1. an information disclosure statement (IDS) in compliance with 37 CFR 1.98 citing each reference deemed most closely related to the subject matter of each of the claims;

6.2. an identification of all the limitations in the claims that are disclosed by the reference specifying where the limitation is disclosed in the cited reference;

6.3. a detailed explanation of how each of the claims are patentable over the references cited with particularity required by 37 CFR 1.111(b) and (c);

6.4. a concise statement of the utility of the invention as defined in each of the independent claims (unless the application is a design application);

6.5. a showing of where each limitation of the claims finds support under 35 USC 112, first paragraph, in the written description of the specification. If applicable, the showing must also identify: (1) each means- (or step) plus-function claim element that invokes consideration under 35 USC 112, sixth paragraph; and (2) the structure, material, or acts in the specification that corresponds to each means- (or step) plus-function claim element that invokes consideration under 35 USC 112, sixth paragraph; if the application claims the benefit of one or more applications under title 35, United States Code, the showing must also include where each limitation of the claims finds support under 35 USC 112, first paragraph, in each such application in which such supports exists;

6.6. an identification of any cited references that may be disqualified under 35 USC 103(c).

REVIEW OF FACTS

The conditions regarding the application (section I, subsections 1-4) discussed above are considered to have been met. Additionally, the conditions regarding the petition, section II, subsections 1-4 are considered to have been met. However, the petition fails to comply with condition II, subsections 5 and 6.

It appears that the search is incomplete. Note that a search in Class 8, subclass 94.11 is required.

Only ten of the references listed on the 2 page Information Disclosure Statement (IDS) have been discussed. However, there is a presumption that each of the cited references is considered most relevant to the claimed invention and that an identification of where all of the limitations in the claims that are disclosed in the references is required.

Applicant is encouraged to review the Frequently Asked Questions concerning the Accelerated Examination Program posted on www.uspto.gov. Specifically, note the question and answer reproduced below:

IDS 3. Will the Office accept an accelerated examination support document (AESD) that contains a list of references in the information disclosure statement (IDS) of the AESD, but does not include any identification and explanation for those references that are not required to be submitted in the IDS of the AESD (*i.e.*, references that are not most closely related to the subject matter of each of the claims)?

No, the AESD will be deemed insufficient for lack of identification and explanation. The applicant will be notified of the defects and the application will remain in the status of a new application awaiting action in its regular turn. The applicant will be given a time period of one month, without any extension of time under 37 CFR §1.136(a), to perfect the petition.

If applicant wishes to cite references that are not required in an AESD for the examiner to consider, applicant may submit such references in a separate IDS in compliance with 37 CFR §1.97 and §1.98. Applicant should clearly identify the IDS of the AESD that is in support of the petition to make special and, similarly, applicant should clearly identify the separate IDS that is not in support of the petition. Consistent with 37 CFR §10.18, any reference submitted in a separate IDS that is not part of an AESD will be treated as a representation by applicant to the USPTO that no reference submitted in the separate IDS is deemed closer to the subject matter of at least one claim than the references provided in the AESD.

It is required that petitioner provide a showing of where each limitation of the claims finds support under 35 USC 112, first paragraph, in the written description of parent application 12/724,311, and PCT/US10/27341, as applicant has claimed priority to these applications.

It is further noted that the tables provided on pages 4, 19 and 34 of the AESD are unreadable. As these appear to summarize the differences between the present claims and the prior art discussed in the AESD, it is suggested that these tables be resubmitted in a format that can be viewed.

Therefore, the petition fails to meet the required conditions to be accorded special status under the accelerated examination procedure.

DECISION

For the above-stated reasons, the petition is dismissed. The application will therefore be taken up by the examiner in its regular turn.

Petitioner is given a single opportunity to perfect the petition. Any request for reconsideration of this decision must be submitted within 1 (one) month or 30 (thirty) days, whichever is longer, (no extension of time under 37 CFR 1.136(a)) from the date of this decision in order to be considered timely. Any request for reconsideration must address the deficiencies indicated above.

Petitioner is reminded that, upon granting of the special status of the application on request for reconsideration, the application will be processed expeditiously. However, due to the dismissal of the instant petition, examination may not be completed within twelve months of the filing date of the application.

Any inquiry regarding this decision should be directed to Christine Tierney, Quality Assurance Specialist, at (571) 272-1055.

/Christine Tierney/

Christine Tierney
Quality Assurance Specialist
Technology Center 1700

UNITED STATES PATENT AND TRADEMARK OFFICE

UNITED STATES DEPARTMENT OF COMMERCE
United States Patent and Trademark Office
Address: COMMISSIONER FOR PATENTS
P.O. Box 1450
Alexandria, Virginia 22313-1450
www.uspto.gov

APPLICATION NO.	FILING DATE	FIRST NAMED INVENTOR	ATTORNEY DOCKET NO.	CONFIRMATION NO.
13/097,837	04/29/2011	Kemal Schankereli	SCHANK-THIN-PROCESS	7353

50438 7590 09/02/2011

JUNEAU PARTNERS
333 N Fairfax St.
Suite 305
ALEXANDRIA, VA 22314

EXAMINER	
ART UNIT	PAPER NUMBER
1742	

MAIL DATE	DELIVERY MODE
09/02/2011	PAPER

Please find below and/or attached an Office communication concerning this application or proceeding.

The time period for reply, if any, is set in the attached communication.

UNITED STATES PATENT AND TRADEMARK OFFICE

Commissioner for Patents
United States Patent and Trademark Office
P.O. Box 1450
Alexandria, VA 22313-1450
www.uspto.gov

CST

SEP 0 2 2011

In re application of
Kemal Schankereli
Serial No. 13/097,837
Filed: April 29, 2011
For: THIN COLLAGEN TISSUE FOR MEDICAL DEVICE APPLICATIONS

DECISION ON PETITION TO MAKE SPECIAL

This is a decision on the Request for Reconsideration of Petition to Make Special under the Accelerated Examination Program filed on August 24, 2011 to make the above-identified application special.

The petition to make the application special is **GRANTED.**

The application is eligible for accelerated examination and the petition complies with the conditions for granting the application special status pursuant to the "Change to Practice for Petitions in Patent Applications to Make Special and for Accelerated Examination" published June 26, 2006, in the Federal Register. (71 Fed. Reg. 36323).

The prosecution of the instant application will be conducted expeditiously according to the following guidelines.

1. The application will be docketed to an examiner and taken up for action within two weeks of the date of this decision.

2. Restriction Practice:
If the examiner determines that the claims are not directed to a single invention, a telephone request to elect one single invention will be made pursuant to MPEP 812.01. As a prerequisite to the grant of this petition, the applicant has agreed to make an oral election, by telephone, without traverse. If the applicant refuses to make an election without traverse, or the examiner cannot reach the applicant after a reasonable effort, the examiner will treat the first claimed invention (invention defined by claim 1) as having being constructively elected without traverse for examination.

3. Office action:
If it is determined that, after appropriate consultation, there is a potential rejection or any other issue to be addressed, the examiner will telephone the applicant and arrange an interview to discuss and resolve the issue. An Office action, other than a Notice of Allowance and Fee(s) Due (Notice of Allowance), will not be issued unless either: 1) an interview was conducted but did not result in agreed to action that places the application in condition for allowance, or, 2) a determination is made that an interview would be unlikely to result in the application being placed in condition for allowance, and 3) an internal conference has been held to review any rejection of any claim.

4. Time for Reply:
An Office action other than a Notice of Allowance or a final Office action will set a shortened statutory period of one month or thirty days, whichever is longer, for reply with no extension of time available under 37 CFR 1.136(a). Failure to timely file a reply within this non-extendible period for reply will result in the abandonment of the application.

5. Reply by Applicant:
A timely reply to an Office action other than the Notice of Allowance must be submitted electronically via EFS or EFS-web and limited to addressing the rejections, objections and requirement made. Any amendment that attempts to: 1) add claims which would result in more than three pending independent claims or more than twenty pending total claims; 2) present claims not encompassed by the pre-examination search or an updated accelerated examination support document; or 3) present claims that are directed a non-elected invention or an invention other than that previously claimed and examined in the application, will be treated as not fully responsive and will not be entered.

For any amendment to the claims (including any new claim) that is not encompassed by the accelerated examination support document, applicant must provide an updated accelerated examination support document that encompasses the amended or new claims at the time of filing of the amendment.

To proceed expeditiously with the examination, it is recommended that a reply with amendments made to any claim or with any new claim being added be accompanied by an updated accelerated examination support document or a statement explaining how the amended or new claim is supported by the original accelerated examination support document.

6. Information Disclosure Statement (IDS):
Any IDS filed during prosecution must be submitted electronically via EFS or EFS-web, accompanied by an updated accelerated examination support document, and be in compliance with 37 CFR 1.97 and 1.98.

7. Post-Allowance Processing:
To expedite processing of the allowed application into a patent, the applicant must: 1) pay the required fees within one month of the date of the Notice of Allowance, and 2) not file any post allowance papers not required by the Office. In no event may the issue fee be paid and accepted later than three months from the date of the Notice of Allowance.

8. After-Final and Appeal Procedures:
To expedite prosecution, after receiving the final Office action, applicant must: 1) promptly file a notice of appeal, an appeal brief and appeal fees; and 2) not request a pre-appeal brief conference.

Any amendment, affidavit or other evidence filed after final Office action must comply with applicable rules and the requirements outlined in numbered paragraphs 5 and 6 above.

On appeal, the application will proceed according to normal appeal procedures. After appeal, the application will again be treated special.

9. Proceedings Outside the Normal Examination Process:
If the application becomes involved in a proceeding that is outside the normal examination process (e.g., a secrecy order, national security review, interference proceeding, petitions under 37 CFR 1.181, 182 or 183), the application will be treated special before and after such proceeding.

10. Final Disposition:
The twelve month goal of this accelerated examination procedure ends with a final disposition. The mailing of a final Office action, a Notice of Allowance, the filing of a Notice of Appeal, or the filing of a Request for Continued Examination (RCE) is the final disposition.

If, during prosecution, a paper is not filed electronically using EFS-web, a reply is filed but is not fully responsive, the application is involved in an appeal, or a proceeding outside normal examination process, the application will still be examined expeditiously, however, the final disposition may occur more than twelve months from the filing of the application.

Any inquiry regarding this decision should be directed to Christine Tierney, Quality Assurance Specialist, at (571) 272-1055.

/Christine Tierney/

Christine Tierney
Quality Assurance Specialist
Technology Center 1700

UNITED STATES PATENT AND TRADEMARK OFFICE

UNITED STATES DEPARTMENT OF COMMERCE
United States Patent and Trademark Office
Address: COMMISSIONER FOR PATENTS
P.O. Box 1450
Alexandria, Virginia 22313-1450
www.uspto.gov

APPLICATION NO.	FILING DATE	FIRST NAMED INVENTOR	ATTORNEY DOCKET NO.	CONFIRMATION NO.
13/097,837	04/29/2011	Kemal Schankereli	SCHANK-THIN-PROCESS	7353

50438 7590 09/30/2011

JUNEAU PARTNERS
333 N Fairfax St.
Suite 305
ALEXANDRIA, VA 22314

EXAMINER	
KHAN, AMINA S	

ART UNIT	PAPER NUMBER
1764	

MAIL DATE	DELIVERY MODE
09/30/2011	PAPER

Please find below and/or attached an Office communication concerning this application or proceeding.

The time period for reply, if any, is set in the attached communication.

UNITED STATES PATENT AND TRADEMARK OFFICE

Commissioner for Patents
United States Patent and Trademark Office
P.O. Box 1450
Alexandria, VA 22313-1450
www.uspto.gov

9/30/11

CST

In re application of	:	
Kemal Schankereli	:	
Serial No. 13/097,837	:	DECISION ON PETITION
Filed: April 29, 2011	:	TO MAKE SPECIAL
For: THIN COLLAGEN TISSUE FOR MEDICAL DEVICE APPLICATIONS	:	

This is a decision on the Request for Reconsideration of Petition to Make Special under the Accelerated Examination Program filed on August 24, 2011 to make the above-identified application special.

The petition to make the application special is **GRANTED.**

The application is eligible for accelerated examination and the petition complies with the conditions for granting the application special status pursuant to the "Change to Practice for Petitions in Patent Applications to Make Special and for Accelerated Examination" published June 26, 2006, in the Federal Register. (71 Fed. Reg. 36323).

The prosecution of the instant application will be conducted expeditiously according to the following guidelines.

1. The application will be docketed to an examiner and taken up for action within two weeks of the date of this decision.

2. Restriction Practice:
   If the examiner determines that the claims are not directed to a single invention, a telephone request to elect one single invention will be made pursuant to MPEP 812.01. As a prerequisite to the grant of this petition, the applicant has agreed to make an oral election, by telephone, without traverse. If the applicant refuses to make an election without traverse, or the examiner cannot reach the applicant after a reasonable effort, the examiner will treat the first claimed invention (invention defined by claim 1) as having being constructively elected without traverse for examination.

3. Office action:
   If it is determined that, after appropriate consultation, there is a potential rejection or any other issue to be addressed, the examiner will telephone the applicant and arrange an interview to discuss and resolve the issue. An Office action, other than a Notice of Allowance and Fee(s) Due (Notice of Allowance), will not be issued unless either: 1) an interview was conducted but did not result in agreed to action that places the application in condition for allowance, or, 2) a determination is made that an interview would be unlikely to result in the application being placed in condition for allowance, and 3) an internal conference has been held to review any rejection of any claim.

4. Time for Reply:
   An Office action other than a Notice of Allowance or a final Office action will set a shortened statutory period of one month or thirty days, whichever is longer, for reply with no extension of time available under 37 CFR 1.136(a). Failure to timely file a reply within this non-extendible period for reply will result in the abandonment of the application.

5. Reply by Applicant:
   A timely reply to an Office action other than the Notice of Allowance must be submitted electronically via EFS or EFS-web and limited to addressing the rejections, objections and requirement made. Any amendment that attempts to: 1) add claims which would result in more than three pending independent claims or more than twenty pending total claims; 2) present claims not encompassed by the pre-examination search or an updated accelerated examination support document; or 3) present claims that are directed a non-elected invention or an invention other than that previously claimed and examined in the application, will be treated as not fully responsive and will not be entered.

   For any amendment to the claims (including any new claim) that is not encompassed by the accelerated examination support document, applicant must provide an updated accelerated examination support document that encompasses the amended or new claims at the time of filing of the amendment.

   To proceed expeditiously with the examination, it is recommended that a reply with amendments made to any claim or with any new claim being added be accompanied by an updated accelerated examination support document or a statement explaining how the amended or new claim is supported by the original accelerated examination support document.

6. Information Disclosure Statement (IDS):
   Any IDS filed during prosecution must be submitted electronically via EFS or EFS-web, accompanied by an updated accelerated examination support document, and be in compliance with 37 CFR 1.97 and 1.98.

7. Post-Allowance Processing:
   To expedite processing of the allowed application into a patent, the applicant must: 1) pay the required fees within one month of the date of the Notice of Allowance, and 2) not file any post allowance papers not required by the Office. In no event may the issue fee be paid and accepted later than three months from the date of the Notice of Allowance.

8. After-Final and Appeal Procedures:
   To expedite prosecution, after receiving the final Office action, applicant must: 1) promptly file a notice of appeal, an appeal brief and appeal fees; and 2) not request a pre-appeal brief conference.

   Any amendment, affidavit or other evidence filed after final Office action must comply with applicable rules and the requirements outlined in numbered paragraphs 5 and 6 above.

   On appeal, the application will proceed according to normal appeal procedures. After appeal, the application will again be treated special.

9. Proceedings Outside the Normal Examination Process:
   If the application becomes involved in a proceeding that is outside the normal examination process (e.g., a secrecy order, national security review, interference proceeding, petitions under 37 CFR 1.181, 182 or 183), the application will be treated special before and after such proceeding.

10. Final Disposition:
    The twelve month goal of this accelerated examination procedure ends with a final disposition. The mailing of a final Office action, a Notice of Allowance, the filing of a Notice of Appeal, or the filing of a Request for Continued Examination (RCE) is the final disposition.

If, during prosecution, a paper is not filed electronically using EFS-web, a reply is filed but is not fully responsive, the application is involved in an appeal, or a proceeding outside normal examination process, the application will still be examined expeditiously, however, the final disposition may occur more than twelve months from the filing of the application.

Any inquiry regarding this decision should be directed to Christine Tierney, Quality Assurance Specialist, at (571) 272-1055.

/Christine Tierney/

Christine Tierney
Quality Assurance Specialist
Technology Center 1700

UNITED STATES PATENT AND TRADEMARK OFFICE

UNITED STATES DEPARTMENT OF COMMERCE
United States Patent and Trademark Office
Address: COMMISSIONER FOR PATENTS
P.O. Box 1450
Alexandria, Virginia 22313-1450
www.uspto.gov

APPLICATION NO.	FILING DATE	FIRST NAMED INVENTOR	ATTORNEY DOCKET NO.	CONFIRMATION NO.
13/097,858	04/29/2011	Soichiro IDE	201252-0049 (468127)	7396

55694 7590 11/14/2011

DRINKER BIDDLE & REATH (DC)
1500 K STREET, N.W.
SUITE 1100
WASHINGTON, DC 20005-1209

EXAMINER	
DECADY, ALBERT	

ART UNIT	PAPER NUMBER
2121	

NOTIFICATION DATE	DELIVERY MODE
11/14/2011	ELECTRONIC

Please find below and/or attached an Office communication concerning this application or proceeding.

The time period for reply, if any, is set in the attached communication.

Notice of the Office communication was sent electronically on above-indicated "Notification Date" to the following e-mail address(es):

DBRIPDocket@dbr.com
penelope.mongelluzzo@dbr.com

UNITED STATES PATENT AND TRADEMARK OFFICE

Commissioner for Patents
United States Patent and Trademark Office
P.O. Box 1450
Alexandria, VA 22313-1450
www.uspto.gov

DRINKER BIDDLE & REATH (DC)
1500 K STREET, N.W.
SUITE 1100
WASHINGTON DC 20005-1209

In re Application of: IDE et al.
Application No. 13/097,858
Attorney Docket #: **201252-0049 (468127)**
Filed: April 29, 2011
For: **NUMERICAL CONTROLLER FOR MACHINE TOOL WITH FUNCTION OF CONTROLLING SPEED OF ARC OPERATION**

DECISION ON REQUEST TO PARTICIPATE IN PATENT PROSECUTION HIGHWAY PROGRAM AND PETITION TO MAKE SPECIAL UNDER 37 CFR 1.102(a)

This is a decision on the request to participate in the Patent Prosecution Highway (PPH) program and the petition under 37 CFR 1.102(a), filed September 8, 2011, to make the above-identified application special.

The petition is **GRANTED.**

A grantable request to participate in the PPH program and petition to make special require:

(1) The U.S. application for which participation in the PPH program is requested and the corresponding JPO application must have the same priority/filing date. In particular, the U.S. application (including national stage entry of a PCT application and a so-called bypass application filed under 35 U.S.C. § 111(a) which validly claims benefit under 35 U.S.C. § 120 to a PCT application):

(a) is an application that validly claims priority under 35 U.S.C. § 119(a) and 37 CFR 1.55 to one or more applications filed with JPO,

Or

(b) is an application which is the basis of a valid priority claim under the Paris Convention for the application filed in JPO

Or

(c) is an application which shares a common priority document with the application filed in JPO

Or

(d) and the JPO application are derived from/related to a PCT application having no priority claim

(2) Applicant must submit a copy of:
a. The allowable/patentable claim(s) from the JPO application(s)
b. An English translation of the allowable/patentable claim(s) and
c. A statement that the English translation is accurate;

If the JPO office action does not explicitly state that a particular claim is allowable, the applicant must include a statement in the request for participation in the PPH program or in the transmittal letter accompanying the request for participation that no rejection has been made in the JPO office action regarding that claim, and therefore, the claim is deemed allowable by JPO.

(3) Applicant must:
a. Ensure all the claims in the U.S. application must sufficiently correspond or be amended to sufficiently correspond to the allowable/patentable claim(s) in the JPO application(s). Claims are considered to "sufficiently correspond" where, accounting for differences due to translations and claim format, the claims in the USPTO are of the same or similar scope as the claims in the JPO, or the claims in the USPTO are narrower in scope than the claims in the JPO. In this regard, a claim that is narrower in scope occurs when a JPO claim is amended to be further limited by an additional feature that is supported in the specification (description and/or claims). A claim in the USPTO which introduces a new/different category of claims to those claims indicated as allowable in the JPO is not considered to sufficiently correspond.

b. Submit a claims correspondence table in English;

(4) Examination of the U.S. application has not begun;

(5) Applicant must submit:
a. Documentation of prior office action:
i. a copy of the office action(s)just prior to the "Decision to Grant a Patent" from each of the JPO application(s) containing the allowable/patentable claim(s) or
ii. if the allowable/patentable claims(s) are from a "Notification of Reasons for Refusal" then the Notification of Reasons for Refusal or
iii. if the JPO application is a first action allowance then no office action from the JPO is necessary should be indicated on the request/petition form;
b. An English language translation of the JPO Office action from (5)(a)(i)-(ii) above
c. A statement that the English translation is accurate;

(6) Applicant must submit:
a. An IDS listing the documents cited by the JPO examiner in the JPO office action (unless already submitted in this application)
b. Copies of the documents except U.S. patents or U.S. patent application publications (unless already submitted in this application);

The petition is **GRANTED.**

The request to participate in the PPH pilot program and petition are found to comply with the above requirements. Accordingly, the above-identified application has been accorded "special" status.

Telephone inquiries concerning this decision should be directed to Mano Padmanabhan at 571-272-4210.

All other inquiries concerning the examination or status of the application is accessible in the PAIR system at http://www.uspto.gov/ebc/index.html.

The application is being forwarded to the examiner for action on the merits commensurate with this decision.

/Mano Padmanabhan/

Mano Padmanabhan
Quality Assurance Specialist, Technology Center 2100, Workgroup 2180
571-272-4210

UNITED STATES PATENT AND TRADEMARK OFFICE

UNITED STATES DEPARTMENT OF COMMERCE
United States Patent and Trademark Office
Address: COMMISSIONER FOR PATENTS
P.O. Box 1450
Alexandria, Virginia 22313-1450
www.uspto.gov

APPLICATION NO.	FILING DATE	FIRST NAMED INVENTOR	ATTORNEY DOCKET NO.	CONFIRMATION NO.
13/097,860	04/29/2011	Nobuaki NAGAO	074782-0083	7401

53080 7590 06/08/2011

MCDERMOTT WILL & EMERY LLP
600 13TH STREET, NW
WASHINGTON, DC 20005-3096

EXAMINER	
ART UNIT	PAPER NUMBER
2812	

NOTIFICATION DATE	DELIVERY MODE
06/08/2011	ELECTRONIC

Please find below and/or attached an Office communication concerning this application or proceeding.

The time period for reply, if any, is set in the attached communication.

Notice of the Office communication was sent electronically on above-indicated "Notification Date" to the following e-mail address(es):

mweipdocket@mwe.com

UNITED STATES PATENT AND TRADEMARK OFFICE

Commissioner for Patents
United States Patent and Trademark Office
P.O. Box 1450
Alexandria, VA 22313-1450
www.uspto.gov

MCDERMOTT WILL & EMERY LLP
600 13TH STREET, NW
WASHINGTON DC 20005-3096

In re Application of
NAGAO et al.
Application No.: 13/097,860
Filed: 29 April 2011
Attorney Docket No.: 074782-0083
For: SOLAR CELL AND METHOD FOR FABRICATING THE SAME

: DECISION ON REQUEST TO
: PARTICIPATE IN THE PATENT
: PROSECUTION HIGHWAY
: PROGRAM AND PETITION
: TO MAKE SPECIAL UNDER
: 37 CFR 1.102(a)

This is a decision on the request to participate in the Patent Prosecution Highway (PPH) program and the petition under 37 CFR 1.102(a), filed 19 May 2011, to make the above-identified application special.

The request and petition are **GRANTED**.

Discussion

A grantable request to participate in the PPH pilot program and petition to make special require:

1. The U.S. application is
    a. a Paris Convention application which either
        i. validly claims priority under 35 U.S.C. 119(a) and 37 CFR 1.55 to one or more applications filed in the JPO, or
        ii. validly claims priority to a PCT application that contains no priority claims, or
    b. a national stage application under the PCT (an application which entered the national stage in the U.S. from a PCT international application after compliance with 35 U.S.C. 371), which PCT application
        i. validly claims priority to an application filed in the JPO, or
        ii. validly claims priority to a PCT application that contains no priority claims, or
        iii. contains no priority claim, or
    c. a so-called bypass application filed under 35 U.S.C. 111(a) which validly claims benefit under 35 U.S.C. 120 to a PCT application, which PCT application
        i. validly claims priority to an application filed in the JPO, or
        ii. validly claims priority to a PCT application that contains no priority claims, or
        iii. contains no priority claim;
2. Applicant must submit a copy of:

a. The allowable/patentable claim(s) from the JPO application(s);
b. An English translation of the allowable/patentable claim(s) and
c. A statement that the English translation is accurate;

3. Applicant must:
   a. Ensure all the claims in the U.S. application must sufficiently correspond or be amended to sufficiently correspond to the allowable/patentable claim(s) in the JPO application(s) and
   b. Submit a claims correspondence table in English;
4. Examination of the U.S. application has not begun;
5. Applicant must submit:
   a. Documentation of prior office action:
      i. a copy of the office action(s) just prior to the "Decision to Grant a Patent" from each of the JPO application(s) containing the allowable/patentable claim(s) or
      ii. if the allowable/patentable claims(s) are from a "Notification of Reasons for Refusal" then the Notification of Reasons for Refusal or
      iii. if the JPO application is a first action allowance then no office action from the JPO is necessary should be indicated on the request/petition form;
   b. An English language translation of the JPO Office action from (5)(a)(i)-(ii) above
   c. A statement that the English translation is accurate;
6. Applicant must submit:
   a. An IDS listing the documents cited by the JPO examiner in the JPO office action (unless already submitted in this application)
   b. Copies of the documents except U.S. patents or U.S. patent application publications (unless already submitted in this application);

The request to participate in the PPH pilot program and petition comply with the above requirements. Accordingly, the above-identified application has been accorded "special" status.

Inquiries concerning this decision should be directed to Lee W. Young at 571-272-4549.

All other inquiries concerning the examination or status of the application is accessible in the PAIR system at http://www.uspto.gov/ebc.index.html.

This application will be forwarded to the examiner for action on the merits commensurate with this decision once this application's formality reviews have been completed.

Lee W. Young
TQAS, Technology Center 2800 – Semiconductors
Electrical & Optical Systems & Components

UNITED STATES PATENT AND TRADEMARK OFFICE

Commissioner for Patents
United States Patent and Trademark Office
P.O. Box 1450
Alexandria, VA 22313-1450
www.uspto.gov

KRAMER LEVIN NAFTALIS & FRANKEL LLP
1177 AVENUE OF THE AMERICAS
NEW YORK NY 10036

MAILED

MAY 23 2011

OFFICE OF PETITIONS

In re Application of :
TERLIZZI, Jeffrey J. et al. :
Application No. 13/097,877 : DECISION ON PETITION
Filed: April 29, 2011 : TO MAKE SPECIAL UNDER
Attorney Docket No. **P6167USC1** : 37 CFR 1.102(c)(1)
:

This is a decision on the petition under 37 CFR 1.102(c)(1), filed April 29, 2011, to make the above-identified application special based on applicant's age as set forth in M.P.E.P. § 708.02, Section IV.

The petition is **GRANTED.**

A grantable petition to make an application special under 37 CFR 1.102(c)(1) and MPEP § 708.02, Section IV: Applicant's Age must be accompanied by evidence showing that at least one of the applicants is 65 years of age, or more, such as a birth certificate or a statement by applicant. No fee is required

The instant petition includes a statement attesting that Wendell Sander is over 65 years of age. Accordingly, the above-identified application has been accorded "special" status.

Telephone inquiries concerning this decision should be directed to Michelle R. Eason at 571-272-4231.

All other inquiries concerning either the examination or status of the application should be directed to the Technology Center.

This application is being referred to the Office of Patent Application Processing to await a reply to the Notice to File Corrected Application Papers mailed May 16, 2011. This application will be accorded "special" status when pre-examination processing is done

Michelle R. Eason
Paralegal Specialist
Office of Petitions

UNITED STATES PATENT AND TRADEMARK OFFICE

Commissioner for Patents
United States Patent and Trademark Office
P.O. Box 1450
Alexandria, VA 22313-1450
www.uspto.gov

KAMILO FEHER
44685 COUNTRY CLUB DRIVE
EL MACERO CA 95618

MAILED

MAY 20 2011

OFFICE OF PETITIONS

In re Application of :
FEHER, Kamilo :
Application No. 13/097,878 : DECISION ON PETITION
Filed: April 29, 2011 : TO MAKE SPECIAL UNDER
Attorney Docket No. **WEBMOB 05set** : 37 CFR 1.102(c)(1)
:

This is a decision on the petition under 37 CFR 1.102(c)(1), filed April 29, 2011, to make the above-identified application special based on applicant's age as set forth in M.P.E.P. § 708.02, Section IV.

The petition is **GRANTED**.

A grantable petition to make an application special under 37 CFR 1.102(c)(1) and MPEP § 708.02, Section IV: Applicant's Age must be accompanied by evidence showing that at least one of the applicants is 65 years of age, or more, such as a birth certificate or a statement by applicant. No fee is required

The instant petition includes a statement by Kamilo Feher attesting that he is over 65 years of age. Accordingly, the above-identified application has been accorded "special" status.

Telephone inquiries concerning this decision should be directed to Michelle R. Eason at 571-272-4231.

All other inquiries concerning either the examination or status of the application should be directed to the Technology Center.

The application is being forwarded to the Technology Center Art Unit 2618 for action on the merits commensurate with this decision.

Michelle R. Eason
Paralegal Specialist
Office of Petitions

UNITED STATES PATENT AND TRADEMARK OFFICE

Commissioner for Patents
United States Patent and Trademark Office
P.O. Box 1450
Alexandria, VA 22313-1450
www.uspto.gov

ROBERT IP LAW
4155 W REECE LN
COLUMBUS IN 47201-5723

MAILED

JAN 30 2012

OFFICE OF PETITIONS

In re Application of :
Darin Kinser :
Application No. 13/097,919 : DECISION ON PETITION
Filed: April 29, 2011 : TO WITHDRAW
Attorney Docket No. Kinser-001 : FROM RECORD
:

This is a decision on the Request to Withdraw as attorney or agent of record under 37 C.F.R. § 1.36(b), filed December 28, 2011.

The request is **APPROVED**.

The request was signed by John Roberts on behalf of the practitioners of record associated with Customer Number 73523.

Applicant is reminded that there is no attorney of record at this time.

All future correspondence will be directed to inventor Darin Kinser at the address indicated below.

Telephone inquiries concerning this decision should be directed to Irvin Dingle at (571) 272-3210.

Irvin Dingle
Petitions Examiner
Office of Petitions

cc: Darin Scott Kinser
389 Trinton Circle
Bedford, IN 47421

UNITED STATES PATENT AND TRADEMARK OFFICE

UNITED STATES DEPARTMENT OF COMMERCE
United States Patent and Trademark Office
Address: COMMISSIONER FOR PATENTS
P.O. Box 1450
Alexandria, Virginia 22313-1450
www.uspto.gov

APPLICATION NUMBER	FILING OR 371(C) DATE	FIRST NAMED APPLICANT	ATTY. DOCKET NO./TITLE
13/097,919	04/29/2011	Darin Kinser	Kinser-001

CONFIRMATION NO. 7522

POWER OF ATTORNEY NOTICE

73523
Robert IP LAW
4155 W Reece LN
Columbus, IN 47201-5723

Date Mailed: 01/30/2012

NOTICE REGARDING CHANGE OF POWER OF ATTORNEY

This is in response to the Power of Attorney filed 12/28/2011.

- The withdrawal as attorney in this application has been accepted. Future correspondence will be mailed to the new address of record. 37 CFR 1.33.

/idingle/

Office of Data Management, Application Assistance Unit (571) 272-4000, or (571) 272-4200, or 1-888-786-0101

UNITED STATES PATENT AND TRADEMARK OFFICE

UNITED STATES DEPARTMENT OF COMMERCE
United States Patent and Trademark Office
Address: COMMISSIONER FOR PATENTS
P.O. Box 1450
Alexandria, Virginia 22313-1450
www.uspto.gov

APPLICATION NUMBER	FILING OR 371(C) DATE	FIRST NAMED APPLICANT	ATTY. DOCKET NO./TITLE
13/097,919	04/29/2011	Darin Kinser	Kinser-001

CONFIRMATION NO. 7522

Darin Scott Kinser
389 Trinton Circle
Bedford, IN 47421

POA ACCEPTANCE LETTER

OC00000005227061 3

Date Mailed: 01/30/2012

NOTICE OF ACCEPTANCE OF POWER OF ATTORNEY

This is in response to the Power of Attorney filed 12/28/2011.

The Power of Attorney in this application is accepted. Correspondence in this application will be mailed to the above address as provided by 37 CFR 1.33.

/idingle/

Office of Data Management, Application Assistance Unit (571) 272-4000, or (571) 272-4200, or 1-888-786-0101

UNITED STATES PATENT AND TRADEMARK OFFICE

UNITED STATES DEPARTMENT OF COMMERCE
United States Patent and Trademark Office
Address: COMMISSIONER FOR PATENTS
P.O. Box 1450
Alexandria, Virginia 22313-1450
www.uspto.gov

APPLICATION NO.	FILING DATE	FIRST NAMED INVENTOR	ATTORNEY DOCKET NO.	CONFIRMATION NO.
13/097,999	04/29/2011	Shujun DANG	HW708036	7688

77399 7590 06/01/2011

Leydig, Voit & Mayer, Ltd
(for Huawei Technologies Co., Ltd)
Two Prudential Plaza Suite 4900
180 North Stetson Avenue
Chicago, IL 60601

EXAMINER	
YAO, KWANG BIN	
ART UNIT	**PAPER NUMBER**
2473	

NOTIFICATION DATE	DELIVERY MODE
06/01/2011	ELECTRONIC

Please find below and/or attached an Office communication concerning this application or proceeding.

The time period for reply, if any, is set in the attached communication.

Notice of the Office communication was sent electronically on above-indicated "Notification Date" to the following e-mail address(es):

Chgpatent@leydig.com
uspatent@huawei.com

UNITED STATES PATENT AND TRADEMARK OFFICE

Commissioner for Patents
United States Patent and Trademark Office
P.O. Box 1450
Alexandria, VA 22313-1450
www.uspto.gov

LEYDIG, VOIT & MAYER, LTD.
(for Huawei Technologies Co., Ltd)
Two Prudential Plaza Suite 4900
180 North Stetson Avenue
Chicago IL 60601

MAILED

MAY 31 2011

DIRECTOR OFFICE
TECHNOLOGY CENTER 2400

In re Application of: DAN, Shujun et al.
Serial No.: **13/097,999**
Filed: April 29, 2011
Attorney Docket No: HW708036
Title: METHOD FOR ALLOCATING TIME AND FREQUENCY RESOURCE FOR RESOURCE REQUEST INDICATOR, MEHTOD FOR TRANSMITTING RESOURCE REQUEST INDICATOR AND DEVICE THEREOF

DECISION ON PETITION TO MAKE SPECIAL FOR NEW APPLICATION UNDER 37 C.F.R. § 1.102 & M.P.E.P. § 708.02

This is a decision on the petition filed on **April 29, 2011** to make the above-identified application special for accelerated examination procedure under 37 C.F.R. § 1.102(d).

The petition to make the application special is **DISMISSED**.

REGULATION AND PRACTICE

A grantable petition to make special under 37 C.F.R. § 1.102(d) and pursuant to the "Change to Practice for Petitions in Patent Applications to Make Special and for Accelerated Examination" published in the Federal Register on June 26, 2006 (71 Fed. Reg. 36323), must satisfy the following conditions:

I. Conditions Regarding the Application:

1. the application must be a non-reissue utility or design application filed under 37 CFR 1.111(a);

2. the application, the petition and the required fees must be filed electronically using the USPTO's electronic filing system (EFS), or EFS-web; if not filed electronically, a statement asserting that EFS and EFS-web were not available during the normal business hours.

3. at the time of filing, the application must be complete under 37 CFR 1.51 and in condition for examination;

4. the application must contain three or fewer independent claims and twenty or fewer total claims and the claims must be directed to a single invention.

II. Conditions Regarding the Petition:

The petition must:

1. be filed with the application;

2. include a statement that applicant agrees not to separately argue the patentability of any independent claim during any appeal in the application;

3. include a statement that applicant agrees to make an election without traverse in a telephone interview.

4. include a statement that applicant agrees to conduct such an interview when requested by the examiner.

5. include a statement, made based on a good faith belief, that a preexamination search in compliance with the following requirements, was conducted, including an identification of the filed of search by United States class and subclass, where applicable, and for database searches, the search logic or chemical structure or sequence used as a query, the name of the file(s) searched and the database service, and the date of the search.

The preexamination search must:

5.1 involve U.S. patents and patent application publications, foreign patent documents, and non-patent literature, unless the applicant can justify with reasonable certainty that no references more pertinent than those already identified are likely to be found in the eliminated sources and includes such a justification with this statement;

5.2. be directed to the claimed invention and encompass all of the features of the claims, giving the claims the broadest reasonable interpretation;

5.3. encompass the disclosed features that may be claimed.

6. must provide in support of the petition an accelerated examination support document. An accelerated examination support document must include:

6.1. an information disclosure statement (IDS) in compliance with 37 CFR 1.98 citing each reference deemed most closely related to the subject matter of each of the claims;

6.2. an identification of all the limitations in the claims that are disclosed by the reference specifying where the limitation is disclosed in the cited reference;

6.3. a detailed explanation of how each of the claims is patentable over the references cited with particularity required by 37 CFR 1.111(b) and (c);

6.4. a concise statement of the utility of the invention as defined in each of the independent claims (unless the application is a design application);

6.5. a showing of where each limitation of the claims finds support under 35 USC 112, first paragraph, in the written description of the specification. If applicable, the showing must also identify: (1) each means- (or step) plus-function claim element that invokes consideration under 35 USC 112, sixth paragraph; and (2) the structure, material, or acts in the specification that corresponds to each means- (or step) plus-function claim element that invokes consideration under 35 USC 112, sixth paragraph; if the application claims the benefit of one or more applications under title 35, United States Code, the showing must also include where each limitation of the claims finds support under 35 USC 112, first paragraph, in each such application in which such supports exists;

6.6. an identification of any cited references that may be disqualified under 35 USC 103(c).

REVIEW OF FACTS

The conditions I.1 to II.4 above are considered to have been met. However, the petition fails to comply with conditions II.5 and II.6 above. Therefore, the petition fails to meet the required conditions to be accorded special status under the accelerated examination procedure.

Regarding the requirement of MPEP §708.02(a)(I)(H)(1) and item II. 5.1 above, Petitioner's Accelerated Examination Support Document (AESD) provides a classification search, which indicates the following classes and subclasses were searched on April 12-14, 2011:

370/203, 370/208, 370/307, 370/329, 370/330, 370/436, 307/479;
375/260, 375/299, 375/316;
178/69G, 178/71.7; and
455/70, 455/72, 455/517, 455/451, 455/500.

Based upon the claimed subject matter of instant application, a search in the following additional class and/or subclasses should be included in order to provide full coverage of where the most pertinent references are most likely to be found:

U.S. Field of Search:

370/319 COMMUNICATION OVER FREE SPACE,
. Repeater:
..Airborne or space satellite repeater:
...Multiple access (e.g. FDMA)

370/320 COMMUNICATION OVER FREE SPACE,
. Repeater:
..Airborne or space satellite repeater:
...Multiple access (e.g. FDMA)
.... Code division (CDMA)

370/321 COMMUNICATION OVER FREE SPACE,
. Repeater:
..Airborne or space satellite repeater:
...Multiple access (e.g. FDMA)
.... Time division (TDMA)

370/335 COMMUNICATION OVER FREE SPACE:
...Combining or distributing information via code word channels using multiple access techniques (e.g. CDMA)

Due to the deficiencies identified above, Petitioner should review the search document and update the search to rectify the deficiencies and/or provide any clarification if deemed necessary.

DECISION

For the above-stated reasons, the petition is **DISMISSED**. The application will therefore be taken up by the examiner for action in its regular turn.

Petitioner is given a single opportunity to perfect the petition. Any request for reconsideration of this decision must be submitted within 1 (one) month or 30 (thirty) days, whichever is longer, (no extension of time under 37 CFR 1.136(a)) from the date of this decision in order to be considered timely. Any request for reconsideration must address the deficiencies indicated above.

Petitioner is reminded that, upon granting of the special status of the application on request for reconsideration, the application will be processed expeditiously. However, due to the dismissal of the instant petition, examination may not be completed within twelve months of the filing date of the application.

Any inquiry regarding this decision should be directed the undersigned whose telephone number is (571) 272-3126.

If attempts to reach the undersigned by telephone are unsuccessful, Beatriz Prieto, Quality Assurance Specialist, can be reached at (571) 272-3902.

/Beatriz Prieto/ for

Chau T. Nguyen,
Quality Assurance Specialist
Technology Center 2400
Computer Architecture, Software and Information Security

UNITED STATES PATENT AND TRADEMARK OFFICE

UNITED STATES DEPARTMENT OF COMMERCE
United States Patent and Trademark Office
Address: COMMISSIONER FOR PATENTS
P.O. Box 1450
Alexandria, Virginia 22313-1450
www.uspto.gov

APPLICATION NO.	FILING DATE	FIRST NAMED INVENTOR	ATTORNEY DOCKET NO.	CONFIRMATION NO.
13/097,999	04/29/2011	Shujun DANG	HW708036	7688

77399 7590 07/14/2011

Leydig, Voit & Mayer, Ltd
(for Huawei Technologies Co., Ltd)
Two Prudential Plaza Suite 4900
180 North Stetson Avenue
Chicago, IL 60601

EXAMINER	
YAO, KWANG BIN	
ART UNIT	**PAPER NUMBER**
2473	

NOTIFICATION DATE	DELIVERY MODE
07/14/2011	ELECTRONIC

Please find below and/or attached an Office communication concerning this application or proceeding.

The time period for reply, if any, is set in the attached communication.

Notice of the Office communication was sent electronically on above-indicated "Notification Date" to the following e-mail address(es):

Chgpatent@leydig.com
uspatent@huawei.com

UNITED STATES PATENT AND TRADEMARK OFFICE

Commissioner for Patents
United States Patent and Trademark Office
P.O. Box 1450
Alexandria, VA 22313-1450
www.uspto.gov

MAILED

JUN 13 2011

DIRECTOR OFFICE
TECHNOLOGY CENTER 2400

LEYDIG, VOIT & MAYER, LTD.
(for Huawei Technologies Co., Ltd)
Two Prudential Plaza Suite 4900
180 North Stetson Avenue
Chicago IL 60601

In re Application of: DAN, Shujun et al.
Serial No.: **13/097,999**
Filed: April 29, 2011
Attorney Docket No: HW708036
Title: METHOD FOR ALLOCATING TIME AND FREQUENCY RESOURCE FOR RESOURCE REQUEST INDICATOR, MEHTOD FOR TRANSMITTING RESOURCE REQUEST INDICATOR AND DEVICE THEREOF

DECISION ON PETITION TO MAKE SPECIAL FOR NEW APPLICATION UNDER 37 C.F.R. § 1.102 & M.P.E.P. § 708.02

This is a decision on the renewed petition filed on **June 30, 2011** to make the above-identified application special for accelerated examination procedure under 37 C.F.R. § 1.102(d). The original petition, submitted upon filing of the application on April 29, 2011, was dismissed in the decision mailed on May 31, 2011.

The petition to make the application special is **GRANTED** as the revised Preexamination Search Statement now meets the requirements of condition II.5.2.

The application is eligible for accelerated examination and the renewed petition complies with the conditions for granting the application special status pursuant to the "Change to Practice for Petitions in Patent Applications to Make Special and for Accelerated Examination" published June 26, 2006, in the Federal Register. (71 Fed. Reg. 36323).

The prosecution of the instant application will be conducted expeditiously according to the following guidelines.

1. The application will be docketed to an examiner and taken up for action within two weeks of the date of this decision.

2. Restriction Practice:

If the examiner determines that the claims are not directed to a single invention, a telephone request to elect one single invention will be made pursuant to MPEP 812.01. As a prerequisite to the grant of this petition, the applicant has agreed to make an oral election, by telephone, without traverse. If the applicant refuses to make an election without traverse, or the examiner cannot reach the applicant after a reasonable effort, the examiner will treat the first claimed invention (invention defined by claim 1) as having being constructively elected without traverse for examination.

3. Office action:
If it is determined that, after appropriate consultation, there is a potential rejection or any other issue to be addressed, the examiner will telephone the applicant and arrange an interview to discuss and resolve the issue. An Office action, other than a Notice of Allowance and Fee(s) Due (Notice of Allowance), will not be issued unless either: 1) an interview was conducted but did not result in agreed to action that places the application in condition for allowance, or, 2) a determination is made that an interview would be unlikely to result in the application being placed in condition for allowance, and 3) an internal conference has been held to review any rejection of any claim.

4. Time for Reply:
An Office action other than a Notice of Allowance or a final Office action will set a shortened statutory period of one month or thirty days, whichever is longer, for reply with no extension of time available under 37 CFR 1.136(a). Failure to timely file a reply within this non-extendible period for reply will result in the abandonment of the application.

5. Reply by Applicant:
A timely reply to an Office action other than the Notice of Allowance must be submitted electronically via EFS or EFS-web and limited to addressing the rejections, objections and requirement made. Any amendment that attempts to: 1) add claims which would result in more than three pending independent claims or more than twenty pending total claims; 2) present claims not encompassed by the pre-examination search or an updated accelerated examination support document; or 3) present claims that are directed a non-elected invention or an invention other than that previously claimed and examined in the application, will be treated as not fully responsive and will not be entered.

For any amendment to the claims (including any new claim) that is not encompassed by the accelerated examination support document, applicant must provide an updated accelerated examination support document that encompasses the amended or new claims at the time of filing of the amendment.

To proceed expeditiously with the examination, it is recommended that a reply with amendments made to any claim or with any new claim being added be accompanied by an updated accelerated examination support document or a statement explaining how the amended or new claim is supported by the original accelerated examination support document.

6. Information Disclosure Statement (IDS):

Any IDS filed during prosecution must be submitted electronically via EFS or EFS-web, accompanied by an updated accelerated examination support document, and be in compliance with 37 CFR 1.97 and 1.98.

7. Post-Allowance Processing:
To expedite processing of the allowed application into a patent, the applicant must: 1) pay the required fees within one month of the date of the Notice of Allowance, and 2) not file any post allowance papers not required by the Office. In no event may the issue fee be paid and accepted later than three months from the date of the Notice of Allowance.

8. After-Final and Appeal Procedures:
To expedite prosecution, after receiving the final Office action, applicant must: 1) promptly file a notice of appeal, an appeal brief and appeal fees; and 2) not request a pre-appeal brief conference. Any amendment, affidavit or other evidence filed after final Office action must comply with applicable rules and the requirements outlined in numbered paragraphs 5 and 6 above. On appeal, the application will proceed according to normal appeal procedures. After appeal, the application will again be treated special.

9. Proceedings Outside the Normal Examination Process:
If the application becomes involved in a proceeding that is outside the normal examination process (e.g., a secrecy order, national security review, interference proceeding, petitions under 37 CFR 1.181, 182 or 183), the application will be treated special before and after such proceeding.

10. Final Disposition:
The twelve month goal of this accelerated examination procedure ends with a final disposition. The mailing of a final Office action, a Notice of Allowance, the filing of a Notice of Appeal, or the filing of a Request for Continued Examination (RCE) is the final disposition. If, during prosecution, a paper is not filed electronically using EFS-web, a reply is filed but is not fully responsive, the application is involved in an appeal, or a proceeding outside normal examination process, the application will still be examined expeditiously, however, the final disposition may occur more than twelve months from the filing of the application.

Any inquiry regarding this decision should be directed to Chau T. Nguyen, Quality Assurance Specialist, at (571) 272-3126. Beatriz Prieto may also be reached at (571) 272-3902.

/Beatriz Prieto/ for

Chau T. Nguyen,
Quality Assurance Specialist
Technology Center 2400
Computer Architecture, Software and Information Security

UNITED STATES PATENT AND TRADEMARK OFFICE

Commissioner for Patents
United States Patent and Trademark Office
P.O. Box 1450
Alexandria, VA 22313-1450
www.uspto.gov

MAILED

MAR 29 2012

OFFICE OF PETITIONS

PATTERSON & SHERIDAN, L.L.P.
3040 POST OAK BOULEVARD
SUITE 1500
HOUSTON, TX 77056

In re Application of	:	DECISION ON REQUEST TO
Kiyotaka Fukawa, et al.	:	PARTICIPATE IN THE PATENT
Application No.: 13/098,009	:	PROSECUTION HIGHWAY
Filed: 29 April 2011	:	PROGRAM AND PETITION
Attorney Docket No.: TOSH/0271US	:	TO MAKE SPECIAL UNDER
For: STORAGE DEVICE, PROTECTION	:	37 CFR 1.102(a)
METHOD, AND ELECTRONIC DEVICE	:	

This is a decision on the request to participate in the Patent Prosecution Highway (PPH) program and the petition under 37 CFR 1.102(a), filed 30 January 2012, to make the above-identified application special.

The request and petition are **GRANTED**.

Discussion

A grantable request to participate in the PPH pilot program and petition to make special require:

1. The U.S. application is

    a. a Paris Convention application which either
        i. validly claims priority under 35 U.S.C. 119(a) and 37 CFR 1.55 to one or more applications filed in the JPO, or
        ii. validly claims priority to a PCT application that contains no priority claims, or
    b. a national stage application under the PCT (an application which entered the national stage in the U.S. from a PCT international application after compliance with 35 U.S.C. 371), which PCT application
        i. validly claims priority to an application filed in the JPO, or
        ii. validly claims priority to a PCT application that contains no priority claims, or
        iii. contains no priority claim, or
    c. a so-called bypass application filed under 35 U.S.C. 111(a) which validly claims benefit under 35 U.S.C. 120 to a PCT application, which PCT application
        i. validly claims priority to an application filed in the JPO, or

ii. validly claims priority to a PCT application that contains no priority claims, or
iii. contains no priority claim;

2. Applicant must:
   a. Ensure all the claims in the U.S. application must sufficiently correspond or be amended to sufficiently correspond to the allowable/patentable claim(s) in the JPO application(s) and
   b. Submit a claims correspondence table in English;
3. Examination of the U.S. application has not begun;
4. Applicant must submit:
   a. Documentation of prior office action:
      i. a copy of the office action(s) just prior to the "Decision to Grant a Patent" from each of the JPO application(s) containing the allowable/patentable claim(s) or
      ii. if the allowable/patentable claims(s) are from a "Notification of Reasons for Refusal" then the Notification of Reasons for Refusal or
      iii. if the JPO application is a first action allowance then no office action from the JPO is necessary should be indicated on the request/petition form;
   b. An English language translation of the JPO Office action from (5)(a)(i)-(ii) above
5. Applicant must submit:
   a. An IDS listing the documents cited by the JPO examiner in the JPO office action (unless already submitted in this application)
   b. Copies of the documents except U.S. patents or U.S. patent application publications (unless already submitted in this application);

The request to participate in the PPH pilot program and petition comply with the above requirements. Accordingly, the above-identified application has been accorded "special" status.

Telephone inquiries concerning this decision should be directed to the undersigned at (571) 272-3204.

All other inquiries concerning the examination or status of the application is accessible in the PAIR system at http://www.uspto.gov/ebc.index.html.

This application will be forwarded to the examiner for action on the merits commensurate with this decision.

/SDB/

Sherry D. Brinkley
Petitions Examiner
Office of Petitions

UNITED STATES PATENT AND TRADEMARK OFFICE

UNITED STATES DEPARTMENT OF COMMERCE
United States Patent and Trademark Office
Address: COMMISSIONER FOR PATENTS
P.O. Box 1450
Alexandria, Virginia 22313-1450
www.uspto.gov

APPLICATION NO.	FILING DATE	FIRST NAMED INVENTOR	ATTORNEY DOCKET NO.	CONFIRMATION NO.
13/098,034	04/29/2011	Hidekazu ARASE	071025-0047	7761

7590 05/31/2011

McDERMOTT WILL & EMERY LLP
600 13th Street, N.W.
Washington, DC 20005-3096

EXAMINER	
ART UNIT	PAPER NUMBER
1722	

MAIL DATE	DELIVERY MODE
05/31/2011	PAPER

Please find below and/or attached an Office communication concerning this application or proceeding.

The time period for reply, if any, is set in the attached communication.

UNITED STATES PATENT AND TRADEMARK OFFICE

Commissioner for Patents
United States Patent and Trademark Office
P.O. Box 1450
Alexandria, VA 22313-1450
www.uspto.gov

EL

May 31, 2011

In re application of	:	DECISION ON REQUEST TO
Arase, Hidekazu	:	PARTICIPATE IN PATENT
Serial No. 13/098034	:	PROSECUTION HIGHWAY
Filed: April 29, 2011	:	PROGRAM AND
For: **METHOD FOR MOUNTING A COMPONENT**	:	PETITION TO MAKE SPECIAL UNDER 37 CFR 1.102(a)

This is a decision on the request to participate in the Patent Prosecution Highway (PPH) program and the petition under 37 CFR 1.102(a) to make the above-identified application special filed May 03, 2011.

The request and petition are **GRANTED**.

A grantable request to participate in the PPH program and petition to make special require:

(1) The U.S. application must validly claim priority under 35 U.S.C. 119(a) to one or more applications filed in the JPO, note where the JPO application with similar claims is not the same application from which the U.S. application claims priority that the applicant must identify the relationship between the JPO application with similar claims and the JPO priority application;

(2) Applicant must submit a copy of:

a. The allowable/patentable claim(s) from the JPO application(s) or if a copy of the allowable/patentable claims is available via the Dossier Access System (DAS) applicant may request the USPTO to obtain a copy from DAS; however, if the USPTO is unable to obtain a copy from the DAS, the applicant will be required to submit a copy;
b. An English translation of the allowable/ patentable claim(s), if applicable; and
c. A statement that the English translation is accurate, if applicable;

(3) Applicant must:

a. Ensure all the independent claims in the U.S. application must sufficiently correspond or be amended to sufficiently correspond to the allowable/patentable claim(s) in the JPO application(s); and
b. Submit a claims correspondence table in English;

(4) Examination of the U.S. application has not begun;

(5) Applicant must submit:

a. Documentation of prior office action:
   i. a copy of the office action(s) just prior to the "Decision to Grant a Patent" from each of the JPO application(s) containing the allowable/patentable claims(s) or
   ii. if the allowable/patentable claim(s) are from "Notification of Reasons for Refusal" then the Notification of Reasons for Refusal or
   iii. if the JPO application is a first action allowance then no office action from the JPO is necessary should be indicated on the request/petition form;
   Further, if a copy of the documents from (i) or (ii) is available via the Dossier Access System (DAS), applicant may request the USPO obtain a copy from the DAS; however, if the USPTO is unable to obtain a copy of the DAS, the applicant will be required to submit a copy; and
b. An English language translation of the JPO Office action from (5)(a)(i)-(ii) above if applicable; and

(6) Applicant must submit:

a. An IDS listing the documents cited by the JPO examiner in the JPO office action (unless already submitted in this application)
b. Copies of documents except U.S. patents or U.S. patent application publications (unless already submitted in this application).

The request to participate in the PPH program and petition comply with the above requirements. Accordingly, the above-identified application has been accorded "special" status.

The application is currently undergoing pre-examination processing, and will be forwarded to the examiner for action on the merits upon completion of the processing.

Any inquiry regarding this decision should be directed to Emily M. Le, Supervisory Patent Examiner, at (571) 272-0903.

All other inquiries concerning the examination or status of the application is accessible in the PAIR system at http://www.uspto.gov/ebc/index.html.

/ Emily M. Le/

Emily M. Le
Supervisory Patent Examiner,
Technology Center 1700

UNITED STATES PATENT AND TRADEMARK OFFICE

Commissioner for Patents
United States Patent and Trademark Office
P.O. Box 1450
Alexandria, VA 22313-1450
www.uspto.gov

MAILED
JAN 03 2012
OFFICE OF PETITIONS

MCGUIREWOODS LLP
1750 TYSONS BLVD
SUITE 1800
MCLEAN VA 22102

In re Application of :
Gately, et al. : DECISION ON PETITION
Application No. 13/098,077 :
Filed: April 29, 2011 :
Attorney Docket No. 44433.5002 :

This is a decision on the petition to revive pursuant to 37 CFR 1.137(b), filed December 19, 2011.

The petition is **GRANTED.**

The above-identified application became abandoned for failure to timely file a reply to the Notice to File Missing Parts, mailed May 16, 2011. This Notice set an extendable period for reply of two (2) months for applicants to submit an oath or declaration, together with the surcharge for its late filing. No reply having been received, the application became abandoned on July 17, 2011. The mailing of this decision precedes the mailing of a courtesy Notice of Abandonment.

With the instant petition, petitioner has made the proper statement of unintentional delay, paid the petition fee, and submitted the required reply in the form of a declaration and surcharge.

Pursuant to 37 CFR 1.136, an extension of time must be filed prior to the expiration of the maximum period obtainable for reply to avoid abandonment. Accordingly, since the $1345 extension of time fee submitted with the petition on December 19, 2011 was subsequent to the maximum period obtainable for reply (December 16, 2011), this fee is being refunded to petitioner.

The application is being forwarded to the Office of Patent Application Processing for pre-examination processing.

Telephone inquiries related to this decision should be directed to the undersigned at (571)272-3207.

Cliff Congo
Petitions Attorney
Office of Petitions

PATENT
Customer No. 22,852
Attorney Docket No. 06720.0334-00
Client No. P55990092

IN THE UNITED STATES PATENT AND TRADEMARK OFFICE

In re Application of:	Group Art Unit: [UNKNOWN]
Shiqah-Ping Jung et al.	Examiner: Not yet assigned
Application No.: 13/098,114	Confirmation No.: 8032
Filed: April 29, 2011	
For: FLUID FLOW PLATE ASSEMBLY FOR FUEL CELLS	

Mail Stop Petition
Commissioner for Patents
P.O. Box 1450
Alexandria, VA 22313-1450

Sir:

STATEMENT IN SUPPORT OF PETITION TO MAKE SPECIAL UNDER THE GREEN TECHNOLOGY PILOT PROGRAM

Applicants hereby petition to make the above-identified application special under the Green Technology Pilot Program. Applicants assert that this application is eligible for special status under the Green Technology Pilot Program, the requirements for which are set forth in the Federal Register. See Pilot Program for Green Technologies Including Greenhouse Gas Reduction, 74 Fed. Reg. 64,666-69 (December 8,2009) and 75 Fed. 28554-55 (May 21, 2010) ("the Federal Register Notices"). This application satisfies the requirements of Section I and the eligibility requirements of Section II or III

of the December 8, 2009, Federal Register Notice, as modified or further explained in the May 21, 2010, Federal Register Notice, as set forth below.

I. Requirements Under Section I of the Federal Register Notices

(1) This application is a non-reissue, non-provisional utility application filed under 35 U.S.C. § 111 (a). This application has a U.S. filing date after December 8, 2009, but is eligible for participation pursuant to 75 Fed. Rep. 69049-50 (November 10, 2010) which expanded the Pilot Program to include applications filed on or after December 8, 2009.

(2) This application relates to fuel cell devices, which enable efficient generation of energy, thereby facilitating energy conservation. This application is directed to a single invention that materially enhances the quality of the environment or materially contributes to the more efficient utilization and conservation of energy resources. For example, the current independent claims recite "a fuel cell" and "a fluid flow plate for fuel cells," which, as discussed below, provide or may be incorporated into "green," low/zero emission, efficient, and/or renewable energy sources. Accordingly, this application is eligible for the Green Technology Pilot Program. Further, the requirement that an application be classified in one of the specific U.S. classifications identified in section VI of the Program Notice has been eliminated by the notice entitled "Elimination of Classification Requirement in the Green Technology Pilot Program," 75 Fed. Reg. 28554-55 (May 21,2010).

(3) This application currently contains three independent claims, nineteen total claims, and no multiple dependent claims.

(4) If the Office determines that the claims are directed to multiple inventions (e.g., in a restriction requirement), Applicants agree to make an election without traverse in a telephonic interview, and to elect an invention that meets the eligibility requirements set forth in the Federal Register Notices.

(5) This Petition is being electronically filed with a Form PTO/SB/420.

(6) To the undersigned's knowledge, this Petition is being filed at least one day prior to the date that a first Office Action appears in the Patent Application Information Retrieval (PAIR) system.

(7) As stated on the Form PTO/SB/420, Applicants request early publication under 37 C.F.R. § 1.219. The $300.00 publication fee set forth in 37 C.F.R. § 1.18(d) accompanies this Petition.

II. Requirements Under Section III of the Federal Register Notice

Applicants assert that the basis for the special status is that the invention materially contributes to the development of renewable energy resources, and/or more efficient utilization and conservation of energy resources. The application's disclosure shows that the claimed invention materially contributes to the development of renewable energy resources, and/or more efficient utilization and conservation of energy resources. For example, the application provides the following descriptions:

> [002] As an illustrative example, **one of the many uses for fluid flow plates is fuel cell applications**, in which fluid flow plates may be used to transport, guide, and/or distribute one or more kinds of "fuel", which may be in a liquid or gaseous for, **for generating electric power**. . . .
>
> . . .

[003] To facilitate the efficiency or ease of fluid distribution or that of an accompanying components, such as a fuel cell device, **it may be desirable to provide fluid flow plates that may increase the ease of flow movement or distribution, decrease flow resistance, simplify system or component design, or provide different fluid flow characteristics.**

. . .

[018] A fuel cell is an electrochemical energy conversion device which converts chemical energy to electrical energy. **A fuel cell may be more efficient than a conventional internal combustion engine in converting fuel to power.** As an example, a fuel cell may use hydrogen as fuel and oxygen as an oxidant to generate electricity, with the byproducts of water and heat. **The fuel (hydrogen), oxidant (oxygen), and byproducts (water and heat) of the fuel cell produce little, if any, pollution,** when compared with most other power sources. **If electric, hybrid, or other vehicles are powered by this kind of fuel cells, greenhouse gases emission and gas consumption may be greatly reduced. Therefore, fuel cells are considered as a type of "green power,"** i.e., a source of power that is greener than many other traditional sources of power or electricity, and **the fuel cell technology is a type of "green technology."**

. . .

[027] **The fuel cell devices are known as sources of green power or clean energy sources, because those devices generate electric power by consuming clean energy resources** such as hydrogen and/or oxygen with little, if any, pollution. Moreover, **the by-product of the power generation reaction as well as the coolant used by the fuel cell devices are water, another resource providing no or little pollution.**

. . .

[048] In the above embodiments, both the coolant channels and fluid channels of **the fluid flow plate** may be linearly extended such that the coolants and the fluids may have less resistance when they respectively flow through the coolant channels and the fluid channels. In this manner, **less power may be required by the fuel cell for transporting the first and second coolants, the first and the second fluids, and the by-product of the**

> **reaction between the first and the second fluids in the disclosed embodiments.**

(Applicants' specification, paragraph [002] - [048]) (emphasis added)

The current independent claims recite "a fuel cell" and "a fluid flow plate for fuel cells," which, provides or may be incorporated into "green," low/zero emission, efficient, and/or renewable energy sources. Consistent with the claims and according to the specification disclosures reproduced above, the application reflects that one important application of the claimed fluid flow plate is "fuel cell applications ...for generating electric power." (Applicants' specification, paragraph [002]). It is known in the art at the time of application that the "**fuel cells are considered as a type of 'green power'**...and **the fuel cell technology is a type of 'green technology**" (Id., paragraph [018], emphasis added). Because "the fuel (hydrogen), oxidant (oxygen), and byproducts (water and heat) of the fuel cell produce little, if any, pollution[,] ...if electric, hybrid, or other vehicles are powered by this kind of fuel cells, **greenhouse gases emission and gas consumption may be greatly reduced**." (Id., emphasis added). Further, at the time of the application, it is desirable for a fuel cell device to include a fluid flow plate "that may increase the ease of flow movement or distribution, decrease flow resistance, simplify system or component design, or provide different fluid flow characteristics." (Id., paragraph [003]). By incorporating the claimed fluid flow plate into the fuel cell, "**less power may be required by the fuel cell** for transporting the first and second coolants, the first and the second fluids, and the by-product of the reaction between the first and the second fluids in the disclosed embodiments." (Id., paragraph [048]; emphasis added).

Therefore, Applicants submit that the Petition states sufficient basis for seeing special status because the application disclosure is clear on its face that the claimed invention materially contributes at least to "the more efficient utilization and conservation of energy resources," as required by Section III (B)(ii) of the Federal Register Notice..

III. Conclusion

This Petition complies with the pertinent statutes and regulations. However, if the Office, for any reason, finds otherwise, the Office is invited to call Applicants' undersigned representative to discuss any potential deficiency.

If any additional fee is necessary, please charge the fee to Deposit Account No. 06-0916.

Respectfully submitted,

FINNEGAN, HENDERSON, FARABOW,
GARRETT & DUNNER, L.L.P.

Dated: May 25, 2011

By: **/Ming-Tao Yang/**
Ming-Tao Yang
Reg. No. 62,019
Tel: 650.849.6783

Doc Code: PET.GREEN
Document Description: Petition for Green Tech Pilot

PTO/SB/420 (11-10)
Approved for use through 01/31/2011. OMB 0651-0062
U.S. Patent and Trademark Office; U. S. DEPARTMENT OF COMMERCE
Under the Paperwork Reduction Act of 1995, no persons are required to respond to a collection of information unless it displays a valid OMB control number.

PETITION TO MAKE SPECIAL UNDER THE GREEN TECHNOLOGY PILOT PROGRAM

Attorney Docket Number: 06720.0334-00000	Application Number (if known): 13/098,114	Filing date: April 29, 2011
First Named Inventor: Shiqah-Ping JUNG		
Title: FLUID FLOW PLATE ASSEMBLY FOR FUEL CELLS		

APPLICANT HEREBY REQUESTS TO PARTICIPATE IN THE GREEN TECHNOLOGY PILOT PROGRAM FOR THE ABOVE-IDENTIFIED APPLICATION. See Instruction Sheet on page 2.

This petition must be timely filed electronically using the USPTO electronic filing system, EFS-Web.

1. By filing this petition:

   Applicant is requesting early publication: Applicant hereby requests early publication under 37 CFR 1.219 and the publication fee set forth in 37 CFR 1.18(d) accompanies this request.

2. By filing this petition: applicant is agreeing to make an election without traverse in a telephonic interview and elect an invention that meets the eligibility requirements for the Green Technology Pilot Program, if the Office determines that the claims are not obviously directed to a single invention. See Instruction Sheet.

3. This request is accompanied by statements of special status for the eligibility requirement.

4. The application contains no more than three (3) independent claims and twenty (20) total claims.

5. The application does not contain any multiple dependent claims.

6. Other attachments: _____

Signature /Ming-Tao Yang/	Date May 25, 2011
Name (Print/Typed) Ming-Tao Yang	Registration Number 62,019

Note: *Signatures of all the inventors or assignees of record of the entire interest or their representative(s) are required in accordance with 37 CFR 1.33 and 11.18. Please see 37 CFR 1.4(d) for the form of the signature. If necessary, submit multiple forms for more than one signature see below*.*

× *Total of 1 forms are submitted.

The information is required to obtain or retain a benefit by the public which is to file (and by the USPTO to process) an application. Confidentiality is governed by 35 U.S.C. 122 and 37 CFR 1.11 and 1.14. This collection is estimated to take 12 hours to complete, including gathering, preparing, and submitting the completed application form to the USPTO. Time will vary depending upon the individual case. Any comments on the amount of time you require to complete this form and/or suggestions for reducing this burden, should be sent to the Chief Information Officer, U.S. Patent and Trademark Office, U.S. Department of Commerce, P.O. Box 1450, Alexandria, VA 22313-1450. DO NOT SEND FEES OR COMPLETED FORMS TO THIS ADDRESS. **SEND TO: Commissioner for Patents, P.O. Box 1450, Alexandria, VA 22313-1450.**

If you need assistance in completing the form, call 1-800-PTO-9199 and select option 2.

UNITED STATES PATENT AND TRADEMARK OFFICE

UNITED STATES DEPARTMENT OF COMMERCE
United States Patent and Trademark Office
Address: COMMISSIONER FOR PATENTS
P.O. Box 1450
Alexandria, Virginia 22313-1450
www.uspto.gov

APPLICATION NO.	FILING DATE	FIRST NAMED INVENTOR	ATTORNEY DOCKET NO.	CONFIRMATION NO.
13/098,144	04/29/2011	Shiqah-Ping Jung	06720.0334-00000	8032

22852 7590 07/29/2011

FINNEGAN, HENDERSON, FARABOW, GARRETT & DUNNER LLP
901 NEW YORK AVENUE, NW
WASHINGTON, DC 20001-4413

EXAMINER	
ART UNIT	PAPER NUMBER
2855	

MAIL DATE	DELIVERY MODE
07/29/2011	PAPER

Please find below and/or attached an Office communication concerning this application or proceeding.

The time period for reply, if any, is set in the attached communication.

UNITED STATES PATENT AND TRADEMARK OFFICE

Commissioner for Patents
United States Patent and Trademark Office
P.O. Box 1450
Alexandria, VA 22313-1450
www.uspto.gov

FINNEGAN, HENDERSON, FARABOW, GARRETT & DUNNER
LLP
901 NEW YORK AVENUE, NW
WASHINGTON DC 20001-4413

In re Application of	:	
JUNG et al.	:	DECISION ON PETITION
Application No. 13/098144	:	TO MAKE SPECIAL UNDER
Filed: April 29, 2011	:	THE GREEN TECHNOLOGY
Attorney Docket No. 06720.0334-00000	:	PILOT PROGRAM

This is a decision on the petition under 37 CFR 1.102, filed on May 25, 2011, to make the above-identified application special under the pilot program for applications pertaining to Green Technologies as set forth 74 Federal Register Notice 64666 (December 8, 2009) and amended by 75 Federal Register Notice 28554 (May 21, 2010) and 75 Federal Register Notice 69049 (November 10, 2010).

The petition is **GRANTED**.

A grantable petition to make an application special under 37 CFR 1.102 and the pilot program as set forth in 74 FR 64666 must be directed to a nonprovisional application filed under 35 USC 111(a) or be a national stage entry under 35 USC 371, exclusive of any reissue applications.

In order to qualify for special status, the following requirements must be met. 1) The application must have no more than 3 independent claims and no more than 20 total claims. 2) The application must not contain any multiple dependent claims. 3) The petition must state the basis for seeking special status, i.e., the claimed invention either: A) materially enhances the quality of the environment or B) materially contributes to: i) the discovery or development of renewable energy resources, ii) the more efficient utilization and conservation of energy resources, or iii) greenhouse gas emission reduction. 4) If the disclosure is not clear on its face that the claimed invention materially contributes under category (A) or (B), the petition must be accompanied by a statement by the applicant, assignee, or an attorney/agent registered to practice before the Office explaining how the materiality standard is met. 5) A statement that applicant will agree to make an election without traverse in a telephonic interview if a restriction requirement is made by the examiner. 6) The petition to make special must be filed electronically. 7) The petition must be filed at least one day prior to the date that a first Office Action appears in the Patent Application Information Retrieval (PAIR) system. 8) The petition must be accompanied by a request for early publication in compliance with 37 CFR 1.219 and include the publication fee as set forth in 37 CFR 1.18(d).

The requirement for a fee for consideration of the petition to make special for applications pertaining to Green Technologies has been waived.

The instant petition complies with items 1 – 8 above. Accordingly, the above-identified application has been accorded "special" status.

Telephone inquires concerning this decision should be directed to Colleen Dunn at 571-272-1170.

The application is being forwarded to the appropriate Technology Center Art Unit for action on the merits commensurate with this decision.

/Colleen Dunn/

Colleen Dunn
Quality Assurance Specialist
Technology Center 2800

UNITED STATES PATENT AND TRADEMARK OFFICE

UNITED STATES DEPARTMENT OF COMMERCE
United States Patent and Trademark Office
Address: COMMISSIONER FOR PATENTS
P.O. Box 1450
Alexandria, Virginia 22313-1450
www.uspto.gov

APPLICATION NO.	FILING DATE	FIRST NAMED INVENTOR	ATTORNEY DOCKET NO.	CONFIRMATION NO.
13/098,161	04/29/2011	Wooyong KANG	216SA-000100US	8078

83220 7590 06/10/2011

AMPACC Law Group, PLLC
6100 219th Street SW, Suite 580
Mountlake Terrace, WA 98043

EXAMINER	
BUKOWCZYK, JEREMY	
ART UNIT	**PAPER NUMBER**
3661	

NOTIFICATION DATE	DELIVERY MODE
06/10/2011	ELECTRONIC

Please find below and/or attached an Office communication concerning this application or proceeding.

The time period for reply, if any, is set in the attached communication.

Notice of the Office communication was sent electronically on above-indicated "Notification Date" to the following e-mail address(es):

docketing@ampacc.com
scho@ampacc.com
rome@ampacc.com

UNITED STATES PATENT AND TRADEMARK OFFICE

JUN 0 9 2011

Commissioner for Patents
United States Patent and Trademark Office
P.O. Box 1450
Alexandria, VA 22313-1450
www.uspto.gov

AMPACC Law Group, PLLC
6100 219th Street SW, Suite 580
Mountlake Terrace WA 98043

In re application of	:	**DECISION ON REQUEST TO**
Kang et al.	:	**PARTICIPATE IN PATENT**
Application No. 13/098,161	:	**PROSECUTION HIGHWAY**
Filed: April 29, 2011	:	**PROGRAM AND PETITION**
For: NAVIGATION DEVICE AND ROAD LANE RECOGNITION METHOD THEREOF	:	**TO MAKE SPECIAL UNDER 37 CFR 1.102(a)**

This is a decision on the renewed request to participate in the Patent Prosecution Highway (PPH) program and the petition under 37 CFR 1.102(a), filed May 03, 2011, to make the above-identified application special.

The request and petition are **GRANTED**.

A grantable request to participate in the PPH program and petition to make special require:

(1) The U.S. application must validly claim priority under 35 U.S.C. 119(a) to one or more applications filed in the KIPO;
(2) Applicant must submit a copy of the allowable/patentable claim(s) from the KIPO application(s) along with an English translation thereof and a statement that the English translation is accurate;
(3) All the claims in the U.S. application must sufficiently correspond or be amended to sufficiently correspond to the allowable/patentable claim(s) in the KIPO application(s);
(4) Examination of the U.S. application has not begun;
(5) Applicant must submit a copy of the latest Office action from each of the KIPO application(s) containing the allowable/patentable claim(s) along with an English translation thereof and a statement that the English translation is accurate;
(6) Applicant must submit an IDS listing the documents cited by the KIPO examiner in the KIPO Office action along with copies of documents except U.S. patents or U.S. patent application publications.

In light of the petition being properly submitted via EFS-Web as is required, the request to participate in the PPH pilot program complies with the above requirements. Therefore, the above-identified application has been accorded "special" status.

All other inquiries concerning the examination or status of the application should be directed to the Patent Application Information Retrieval (PAIR) system.

The application is being forwarded to the examiner for action on the merits commensurate with this decision.

Any inquiry regarding this decision should be directed to Mikado Buiz, Quality Assurance Specialist, at (571) 272-6578.

/ Mikado Buiz /

Mikado Buiz,
Quality Assurance Specialist
Technology Center 3600

MB/MB: 06/09/11

UNITED STATES PATENT AND TRADEMARK OFFICE

UNITED STATES DEPARTMENT OF COMMERCE
United States Patent and Trademark Office
Address: COMMISSIONER FOR PATENTS
P.O. Box 1450
Alexandria, Virginia 22313-1450
www.uspto.gov

APPLICATION NO.	FILING DATE	FIRST NAMED INVENTOR	ATTORNEY DOCKET NO.	CONFIRMATION NO.
13/098,163	04/29/2011	ERIK KOSAR	MPCS-30,497	8082

25883 7590 05/20/2011
HOWISON & ARNOTT, L.L.P
P.O. BOX 741715
DALLAS, TX 75374-1715

EXAMINER	
ART UNIT	PAPER NUMBER
2617	

NOTIFICATION DATE	DELIVERY MODE
05/20/2011	ELECTRONIC

Please find below and/or attached an Office communication concerning this application or proceeding.

The time period for reply, if any, is set in the attached communication.

Notice of the Office communication was sent electronically on above-indicated "Notification Date" to the following e-mail address(es):

patents@dalpat.com

UNITED STATES PATENT AND TRADEMARK OFFICE

Commissioner for Patents
United States Patent and Trademark Office
P.O. Box 1450
Alexandria, VA 22313-1450
www.uspto.gov

HOWISON & ARNOTT, L.L.P
P.O. BOX 741715
DALLAS TX 75374-1715

In re Application of:
KOSAR, ERIK
Serial No.: 13/098,163
Filed: April 29, 2011
Docket: **CT-003**
Title: **HLR-DUAL CIRCUIT SWITCHED AND PACKET SWITCHED REGISTRATION SUPPORT**

DECISION ON PETITION TO MAKE SPECIAL FOR NEW APPLICATION UNDER 37 C.F.R. § 1.102 & M.P.E.P. § 708.02

This is a decision on the petition filed on April 29, 2011 requesting to make the above-identified application special for accelerated examination procedure under 37 C.F.R. § 1.102(d).

The petition to make the application special is GRANTED.

The application is eligible for accelerated examination and the petition complies with the conditions for granting the application special status pursuant to the "Change to Practice for Petitions in Patent Applications to Make Special and for Accelerated Examination" published June 26, 2006, in the Federal Register. (71 Fed. Reg. 36323).

The prosecution of the instant application will be conducted expeditiously according to the following guidelines.

1. The application will be docketed to an examiner and taken up for action within two weeks of the date of this decision.

2. Restriction Practice:
   If the examiner determines that the claims are not directed to a single invention, a telephone request to elect one single invention will be made pursuant to MPEP 812.01. As a prerequisite to the grant of this petition, the applicant has agreed to make an oral election, by telephone, without traverse. If the applicant refuses to make an election without traverse, or the examiner cannot reach the applicant after a reasonable effort, the examiner will treat the first claimed invention (invention defined by claim 1) as having being constructively elected without traverse for examination.

3. Office action:

If it is determined that, after appropriate consultation, there is a potential rejection or any other issue to be addressed, the examiner will telephone the applicant and arrange an interview to discuss and resolve the issue. An Office action, other than a Notice of Allowance and Fee(s) Due (Notice of Allowance), will not be issued unless either: 1) an interview was conducted but did not result in agreed to action that places the application in condition for allowance, or, 2) a determination is made that an interview would be unlikely to result in the application being placed in condition for allowance, and 3) an internal conference has been held to review any rejection of any claim.

4. Time for Reply:
An Office action other than a Notice of Allowance or a final Office action will set a shortened statutory period of one month or thirty days, whichever is longer, for reply with no extension of time available under 37 CFR 1.136(a). Failure to timely file a reply within this non-extendible period for reply will result in the abandonment of the application.

5. Reply by Applicant:
A timely reply to an Office action other than the Notice of Allowance must be submitted electronically via EFS or EFS-web and limited to addressing the rejections, objections and requirement made. Any amendment that attempts to: 1) add claims which would result in more than three pending independent claims or more than twenty pending total claims; 2) present claims not encompassed by the pre-examination search or an updated accelerated examination support document; or 3) present claims that are directed a non-elected invention or an invention other than that previously claimed and examined in the application, will be treated as not fully responsive and will not be entered.

For any amendment to the claims (including any new claim) that is not encompassed by the accelerated examination support document, applicant must provide an updated accelerated examination support document that encompasses the amended or new claims at the time of filing of the amendment.

To proceed expeditiously with the examination, it is recommended that a reply with amendments made to any claim or with any new claim being added be accompanied by an updated accelerated examination support document or a statement explaining how the amended or new claim is supported by the original accelerated examination support document.

6. Information Disclosure Statement (IDS):
Any IDS filed during prosecution must be submitted electronically via EFS or EFS-web, accompanied by an updated accelerated examination support document, and be in compliance with 37 CFR 1.97 and 1.98.

7. Post-Allowance Processing:
To expedite processing of the allowed application into a patent, the applicant must: 1) pay the required fees within one month of the date of the Notice of Allowance, and 2) not

file any post allowance papers not required by the Office. In no event may the issue fee be paid and accepted later than three months from the date of the Notice of Allowance.

8. After-Final and Appeal Procedures:
To expedite prosecution, after receiving the final Office action, applicant must: 1) promptly file a notice of appeal, an appeal brief and appeal fees; and 2) not request a pre-appeal brief conference.

   Any amendment, affidavit or other evidence filed after final Office action must comply with applicable rules and the requirements outlined in numbered paragraphs 5 and 6 above.

   On appeal, the application will proceed according to normal appeal procedures. After appeal, the application will again be treated special.

9. Proceedings Outside the Normal Examination Process:
If the application becomes involved in a proceeding that is outside the normal examination process (e.g., a secrecy order, national security review, interference proceeding, petitions under 37 CFR 1.181, 182 or 183), the application will be treated special before and after such proceeding.

10. Final Disposition:
The twelve month goal of this accelerated examination procedure ends with a final disposition. The mailing of a final Office action, a Notice of Allowance, the filing of a Notice of Appeal, or the filing of a Request for Continued Examination (RCE) is the final disposition.

If, during prosecution, a paper is not filed electronically using EFS-web, a reply is filed but is not fully responsive, the application is involved in an appeal, or a proceeding outside normal examination process, the application will still be examined expeditiously, however, the final disposition may occur more than twelve months from the filing of the application.

Any inquiry regarding this decision should be directed to Wellington Chin, Quality Assurance Specialist, at (571) 272-3134.

/ Wellington Chin /

Wellington Chin
Quality Assurance Specialist
Technology Center 2600

UNITED STATES PATENT AND TRADEMARK OFFICE

UNITED STATES DEPARTMENT OF COMMERCE
United States Patent and Trademark Office
Address: COMMISSIONER FOR PATENTS
P.O. Box 1450
Alexandria, Virginia 22313-1450
www.uspto.gov

APPLICATION NO.	FILING DATE	FIRST NAMED INVENTOR	ATTORNEY DOCKET NO.	CONFIRMATION NO.
13/098,171	04/29/2011	Fukio Handa	U 018379-3	8101

140 7590 06/16/2011

LADAS & PARRY LLP
1040 Avenue of the Americas
NEW YORK, NY 10018-3738

EXAMINER	
ART UNIT	PAPER NUMBER
2437	

NOTIFICATION DATE	DELIVERY MODE
06/16/2011	ELECTRONIC

Please find below and/or attached an Office communication concerning this application or proceeding.

The time period for reply, if any, is set in the attached communication.

Notice of the Office communication was sent electronically on above-indicated "Notification Date" to the following e-mail address(es):

nyuspatactions@ladas.com
nymail@ladas.com

UNITED STATES PATENT AND TRADEMARK OFFICE

Commissioner for Patents
United States Patent and Trademark Office
P.O. Box 1450
Alexandria, VA 22313-1450
www.uspto.gov

Ladas & Parry LLP
1040 Avenue of the Americas
New York NY 10018-3738

In re Application of: Handa et al.
Application No. 13/098171
Filed: April 29, 2011
For: IC Card for Encryption or Decryption Process and Encrypted.. Using the Same

DECISION ON REQUEST TO PARTICIPATE IN PATENT PROSECUTION HIGHWAY PROGRAM AND PETITION TO MAKE SPECIAL UNDER 37 CFR 1.102(d)

This is a decision on the request to participate in the Patent Prosecution Highway (PPH) program and the petition under 37 CFR 1.102(d), filed May 5, 2011, to make the above-identified application special.

The petition is **GRANTED.**

A grantable request to participate in the PPH program and petition to make special require:

(1) The U.S. application is
  (a) a Paris Convention application which either (i) validly claims priority under 35 U.S.C. 119(a) and 37 CFR 1.55 to one or more applications filed in the JPO, or (ii) validly claims priority to a PCT application that contains no priority claims, or
  (b) a national stage application under the PCT (an application which entered the national stage in the U.S. from a PCT international application after compliance with 35 U.S.C. 371), which PCT application (i) validly claims priority to an application filed in the JPO, or (ii) validly claims priority to a PCT application that contains no priority claims, or (iii) contains no priority claim, or
  (c) a so-called bypass application filed under 35 U.S.C. 111 (a) which validly claims benefit under 35 U.S.C. 120 to a PCT application, which PCT application (i) validly claims priority to an application filed in the JPO, or (ii) validly claims priority to a PCT application that contains no priority claims, or (iii) contains no priority claim.

Where the JPO application that contains the allowable/patentable claims is not the same application for which priority is claimed in the U.S. application, applicant must identify the relationship between the JPO application that contains the allowable/patentable claims and the JPO priority application claimed in the U.S. application.

(2) Applicant must submit a copy of: (a) the allowable/patentable claim(s) from the Japanese application(s), (b) an English translation of the allowable/patentable claim(s), if the claims were published in a language other than English); and (c) a statement that the English translation is accurate.

(3) All the claims in the U.S. application must sufficiently correspond to the allowable/patentable claim(s) in the JPO application(s) and Applicant must submit a claim correspondence table in English.

(4) Examination of the U.S. application has not begun.

(5) Applicant must submit: (a) a copy of all the office action(s) (which are relevant to patentability), excluding "Decision to Grant a Patent" from each of the Japanese application(s) containing the allowable/patentable claim(s), (b) an English language translation of the JPO office action(s) (if the office action(s) are not in the English language) and (c) a statement that the English translation is accurate.

(6) Applicant must submit: (a) an IDS listing the documents cited by the JPO examiner in the JPO office action (unless already filed in this application) and (b) copies of all the documents cited in the JPO office action, except U.S. patents or U.S. patent application publications (unless already filed in this application).

(7) The required petition fee under 37 CFR 1.17(h) if filed before May 25, 2010.

The request to participate in the PPH program and petition are found to comply with all the above requirements. Accordingly, the above-identified application has been accorded "special" status.

Telephone inquiries concerning this decision should be directed to Tod Swann at 571-272-3612.

All other inquiries concerning the examination or status of the application is accessible in the PAIR system at http://www.uspto.gov/ebc/index.html.

The application is being forwarded to the examiner for action on the merits commensurate with this decision.

/Tod Swann/

Tod Swann
Quality Assurance Specialist
Technology Center 2400

Doc Code: PPH.PCT.652
Document Description: Petition to make special under PCT-Patent Pros Hwy

PTO/SB/20PCT-US (09-10)
Approved for use through 01/31/2012. OMB 0651-0058
U.S. Patent and Trademark Office; U. S. DEPARTMENT OF COMMERCE
Under the Paperwork Reduction Act of 1995, no persons are required to respond to a collection of information unless it displays a valid OMB control number.

REQUEST FOR PARTICIPATION IN THE PATENT COOPERATION TREATY - PATENT PROSECUTION HIGHWAY (PCT-PPH) PILOT PROGRAM IN A U.S. APPLICATION WHERE THE USPTO WAS THE ISA OR IPEA

Application No:	13/098,213	Filing date:	04/29/2011
First Named Inventor:	Mark J. Miller		
Title of the Invention:	Flexible Capacity Satellite Communications System With Dynamic Distribution And Coverage Areas		

THIS REQUEST FOR PARTICIPATION IN THE PCT-PPH PILOT PROGRAM ALONG WITH THE REQUIRED DOCUMENTS MUST BE SUBMITTED VIA EFS-WEB. INFORMATION REGARDING EFS-WEB IS AVAILABLE AT HTTP://WWW.USPTO.GOV/EBC/EFS_HELP.HTML

APPLICANT HEREBY REQUESTS PARTICIPATION IN THE PCT-PPH PROGRAM AND PETITIONS TO MAKE THE ABOVE-IDENTIFIED APPLICATION SPECIAL UNDER THE PCT-PPH PROGRAM.

The above-identified application is (1) a national stage entry of the corresponding PCT application, or (2) a national stage entry of another PCT application which claims priority to the corresponding PCT application, or (3) a national application that claims domestic/ foreign priority to the corresponding PCT application, or (4) a national application which forms the basis for the priority claim in the corresponding PCT application, or (5) a continuing application of a U.S. application that satisfies one of (1) to (4) above, or (6) a U.S. application that claims domestic benefit to a U.S. provisional application which forms the basis for the priority claim in the corresponding PCT application.

PCT/US11/34845

The corresponding PCT application number(s) is/are:

The international date of the corresponding PCT application(s) is/are:

05/02/11

I. List of Required Documents:

a. **A copy of the latest international work product (WO/ISA, WO/IPEA, or IPER) in the above–identified corresponding PCT application(s)**

☒ Is attached

☐ Is not attached because the document is already in the U.S. application.

b. **A copy of all claims which were indicated as having novelty, inventive step and industrial applicability in the above-identified corresponding PCT application(s).**

☒ Is attached.

☐ Is not attached because the document is already in the U.S. application.

c. **English translations of the documents in a. and b. above are attached (if the documents are not in the English language). A statement that the English translation is accurate is attached for the document in b. above.**

This collection of information is required by 35 U.S.C. 119, 37 CFR 1.55, and 37 CFR 1.102(d). The information is required to obtain or retain a benefit by the public, which is to file (and by the USPTO to process) an application. Confidentiality is governed by 35 U.S.C. 122 and 37 CFR 1.11 and 1.14. This collection is estimated to take 2 hours to complete, including gathering, preparing, and submitting the completed application form to the USPTO. Time will vary depending upon the individual case. Any comments on the amount of time you require to complete this form and/or suggestions for reducing this burden should be sent to the Chief Information Officer, U.S. Patent and Trademark Office, U.S. Department of Commerce, P.O. Box 1450, Alexandria, VA 22313-1450. DO NOT SEND FEES OR COMPLETED FORMS TO THIS ADDRESS.

PTO/SB/20PCT-US (09-10)
Approved for use through 01/31/2012. OMB 0651-0058
U.S.Patent and Trademark Office; U.S. DEPARTMENT OF COMMERCE
Under the Paperwork Reduction Act of 1995, no persons are required to respond to a collection of information unless it displays a valid OMB control number.

REQUEST FOR PARTICIPATION IN THE PCT-PPH PILOT PROGRAM IN A U.S. APPLICATION WHERE THE USPTO WAS THE ISA OR IPEA (continued)

Application No.:	13/098,213
First Named Inventor:	Mark J. Miller

d. **(1) An information disclosure statement listing the documents cited in the international work products (ISR, WO/ISA, WO/IPEA, IPER) of the corresponding PCT application.**

☒ Is attached

☐ Has already been filed in the above-identified U.S. application on _____

(2) Copies of all documents (except) for U.S. patents or U.S. patent application publications)

☒ Are attached.

☐ Have already been filed in the above-identified U.S. application on _____

II. Claims Correspondence Table:

Claims in US Application	Patentable Claims in the corresponding PCT Application	Explanation regarding the correspondence
1-8	30-37	Claims are exactly the same

III. All the claims in the US application sufficiently correspond to the patentable claims in the corresponding PCT application.

Signature /Dr. William T. Ralston #55,561/	Date 10/13/2011
Name (Print/Typed) William Ralston	Registration Number 55561

Privacy Act Statement

The **Privacy Act of 1974 (P.L. 93-579)** requires that you be given certain information in connection with your submission of the attached form related to a patent application or patent. Accordingly, pursuant to the requirements of the Act, please be advised that: (1) the general authority for the collection of this information is 35 U.S.C. 2(b)(2); (2) furnishing of the information solicited is voluntary; and (3) the principal purpose for which the information is used by the U.S. Patent and Trademark Office is to process and/or examine your submission related to a patent application or patent. If you do not furnish the requested information, the U.S. Patent and Trademark Office may not be able to process and/or examine your submission, which may result in termination of proceedings or abandonment of the application or expiration of the patent.

The information provided by you in this form will be subject to the following routine uses:

1. The information on this form will be treated confidentially to the extent allowed under the Freedom of Information Act (5 U.S.C. 552) and the Privacy Act (5 U.S.C 552a). Records from this system of records may be disclosed to the Department of Justice to determine whether disclosure of these records is required by the Freedom of Information Act.
2. A record from this system of records may be disclosed, as a routine use, in the course of presenting evidence to a court, magistrate, or administrative tribunal, including disclosures to opposing counsel in the course of settlement negotiations.
3. A record in this system of records may be disclosed, as a routine use, to a Member of Congress submitting a request involving an individual, to whom the record pertains, when the individual has requested assistance from the Member with respect to the subject matter of the record.
4. A record in this system of records may be disclosed, as a routine use, to a contractor of the Agency having need for the information in order to perform a contract. Recipients of information shall be required to comply with the requirements of the Privacy Act of 1974, as amended, pursuant to 5 U.S.C. 552a(m).
5. A record related to an International Application filed under the Patent Cooperation Treaty in this system of records may be disclosed, as a routine use, to the International Bureau of the World Intellectual Property Organization, pursuant to the Patent Cooperation Treaty.
6. A record in this system of records may be disclosed, as a routine use, to another federal agency for purposes of National Security review (35 U.S.C. 181) and for review pursuant to the Atomic Energy Act (42 U.S.C. 218(c)).
7. A record from this system of records may be disclosed, as a routine use, to the Administrator, General Services, or his/her designee, during an inspection of records conducted by GSA as part of that agency's responsibility to recommend improvements in records management practices and programs, under authority of 44 U.S.C. 2904 and 2906. Such disclosure shall be made in accordance with the GSA regulations governing inspection of records for this purpose, and any other relevant (*i.e.*, GSA or Commerce) directive. Such disclosure shall not be used to make determinations about individuals.
8. A record from this system of records may be disclosed, as a routine use, to the public after either publication of the application pursuant to 35 U.S.C. 122(b) or issuance of a patent pursuant to 35 U.S.C. 151. Further, a record may be disclosed, subject to the limitations of 37 CFR 1.14, as a routine use, to the public if the record was filed in an application which became abandoned or in which the proceedings were terminated and which application is referenced by either a published application, an application open to public inspection or an issued patent.
9. A record from this system of records may be disclosed, as a routine use, to a Federal, State, or local law enforcement agency, if the USPTO becomes aware of a violation or potential violation of law or regulation.

PATENT COOPERATION TREATY

From the INTERNATIONAL SEARCHING AUTHORITY

To: MYMY HENDERSON
KILPATRICK TOWNSEND & STOCKTON LLP
TWO EMBARCADERO CENTER, 8TH FLOOR
SAN FRANCISCO, CA 94111-3834

PCT

NOTIFICATION OF TRANSMITTAL OF THE INTERNATIONAL SEARCH REPORT AND THE WRITTEN OPINION OF THE INTERNATIONAL SEARCHING AUTHORITY, OR THE DECLARATION

(PCT Rule 44.1)

	Date of mailing *(day/month/year)* 26 AUG 2011
Applicant's or agent's file reference 81094-805718	**FOR FURTHER ACTION** See paragraphs 1 and 4 below
International application No. PCT/US2011/034845	International filing date *(day/month/year)* 02 May 2011
Applicant VIASAT, INC	

1. ☒ The applicant is hereby notified that the international search report and the written opinion of the International Searching Authority have been established and are transmitted herewith.

   Filing of amendments and statement under Article 19:
   The applicant is entitled, if he so wishes, to amend the claims of the international application (see Rule 46):

   When? The time limit for filing such amendments is normally two months from the date of transmittal of the international search report.

   Where? Directly to the International Bureau of WIPO, 34 chemin des Colombettes 1211 Geneva 20, Switzerland, Facsimile No.: +41 22 338 82 70

   For more detailed instructions, see *PCT Applicant's Guide*, International Phase, paragraphs 9.004 – 9.011.

2. ☐ The applicant is hereby notified that no international search report will be established and that the declaration under Article 17(2)(a) to that effect and the written opinion of the International Searching Authority are transmitted herewith.

3. ☐ **With regard to any protest** against payment of (an) additional fee(s) under Rule 40.2, the applicant is notified that:

   ☐ the protest together with the decision thereon has been transmitted to the International Bureau together with any request to forward the texts of both the protest and the decision thereon to the designated Offices.

   ☐ no decision has been made yet on the protest; the applicant will be notified as soon as a decision is made.

4. **Reminders**

   The applicant may submit comments on an informal basis on the written opinion of the International Searching Authority to the International Bureau. The International Bureau will send a copy of such comments to all designated Offices unless an international preliminary examination report has been or is to be established. Following the expiration of 30 months from the priority date, these comments will also be made available to the public.

   Shortly after the expiration of **18 months** from the priority date, the international application will be published by the International Bureau. If the applicant wishes to avoid or postpone publication, a notice of withdrawal of the international application, or of the priority claim, must reach the International Bureau before the completion of the technical preparations for international publication (Rules 90*bis*.1 and 90*bis*.3).

   Within **19 months** from the priority date, but only in respect of some designated Offices, a demand for international preliminary examination must be filed if the applicant wishes to postpone the entry into the national phase **until 30 months** from the priority date (in some Offices even later); otherwise, the applicant must, **within 20 months** from the priority date, perform the prescribed acts for entry into the national phase before those designated Offices.

   In respect of other designated Offices, the time limit of **30 months** (or later) will apply even if no demand is filed within 19 months.

   For details about the applicable time limits, Office by Office, see www.wipo.int/pct/en/texts/time_limits.html and the *PCT Applicant's Guide*, National Chapters.

Name and mailing address of the ISA/ Mail Stop PCT, Attn: ISA/US Commissioner for Patents P.O. Box 1450, Alexandria, Virginia 22313-1450 Facsimile No. 571-273-3201	Authorized officer Blaine R. Copenheaver PCT Helpdesk: 571-272-4300 Telephone No. PCT OSP: 571-272-7774

Form PCT/ISA/220 (July 2010)

PATENT COOPERATION TREATY

From the INTERNATIONAL SEARCHING AUTHORITY

To: MYMY HENDERSON
KILPATRICK TOWNSEND & STOCKTON LLP
TWO EMBARCADERO CENTER, 8TH FLOOR
SAN FRANCISCO, CA 94111-3834

PCT

NOTIFICATION OF TRANSMITTAL OF THE INTERNATIONAL SEARCH REPORT AND THE WRITTEN OPINION OF THE INTERNATIONAL SEARCHING AUTHORITY, OR THE DECLARATION

(PCT Rule 44.1)

	Date of mailing *(day/month/year)* 26 AUG 2011
Applicant's or agent's file reference 81094-805718	**FOR FURTHER ACTION** See paragraphs 1 and 4 below
International application No. PCT/US2011/034845	International filing date *(day/month/year)* 02 May 2011
Applicant VIASAT, INC	

1. ☒ The applicant is hereby notified that the international search report and the written opinion of the International Searching Authority have been established and are transmitted herewith.

   Filing of amendments and statement under Article 19:
   The applicant is entitled, if he so wishes, to amend the claims of the international application (see Rule 46):

   When? The time limit for filing such amendments is normally two months from the date of transmittal of the international search report.

   Where? Directly to the International Bureau of WIPO, 34 chemin des Colombettes 1211 Geneva 20, Switzerland, Facsimile No.: +41 22 338 82 70

   For more detailed instructions, see *PCT Applicant's Guide*, International Phase, paragraphs 9.004 – 9.011.

2. ☐ The applicant is hereby notified that no international search report will be established and that the declaration under Article 17(2)(a) to that effect and the written opinion of the International Searching Authority are transmitted herewith.

3. ☐ **With regard to any protest** against payment of (an) additional fee(s) under Rule 40.2, the applicant is notified that:

   ☐ the protest together with the decision thereon has been transmitted to the International Bureau together with any request to forward the texts of both the protest and the decision thereon to the designated Offices.

   ☐ no decision has been made yet on the protest; the applicant will be notified as soon as a decision is made.

4. **Reminders**

   The applicant may submit comments on an informal basis on the written opinion of the International Searching Authority to the International Bureau. The International Bureau will send a copy of such comments to all designated Offices unless an international preliminary examination report has been or is to be established. Following the expiration of 30 months from the priority date, these comments will also be made available to the public.

   Shortly after the expiration of **18 months** from the priority date, the international application will be published by the International Bureau. If the applicant wishes to avoid or postpone publication, a notice of withdrawal of the international application, or of the priority claim, must reach the International Bureau before the completion of the technical preparations for international publication (Rules 90*bis*.1 and 90*bis*.3).

   Within **19 months** from the priority date, but only in respect of some designated Offices, a demand for international preliminary examination must be filed if the applicant wishes to postpone the entry into the national phase **until 30 months** from the priority date (in some Offices even later); otherwise, the applicant must, **within 20 months** from the priority date, perform the prescribed acts for entry into the national phase before those designated Offices.

   In respect of other designated Offices, the time limit of **30 months** (or later) will apply even if no demand is filed within 19 months.

   For details about the applicable time limits, Office by Office, see www.wipo.int/pct/en/texts/time_limits.html and the *PCT Applicant's Guide*, National Chapters.

Name and mailing address of the ISA/ Mail Stop PCT, Attn: ISA/US Commissioner for Patents P.O. Box 1450, Alexandria, Virginia 22313-1450 Facsimile No. 571-273-3201	Authorized officer Blaine R. Copenheaver PCT Helpdesk: 571-272-4300 Telephone No. PCT OSP: 571-272-7774

Form PCT/ISA/220 (July 2010)

PATENT COOPERATION TREATY

PCT

INTERNATIONAL SEARCH REPORT

(PCT Article 18 and Rules 43 and 44)

Applicant's or agent's file reference 81094-805718	**FOR FURTHER ACTION**	see Form PCT/ISA/220 as well as, where applicable, item 5 below.
International application No. PCT/US2011/034845	International filing date *(day/month/year)* 02 May 2011	(Earliest) Priority Date *(day/month/year)* 02 May 2010
Applicant VIASAT, INC		

This international search report has been prepared by this International Searching Authority and is transmitted to the applicant according to Article 18. A copy is being transmitted to the International Bureau.

This international search report consists of a total of 9 sheets.

☐ It is also accompanied by a copy of each prior art document cited in this report.

1. **Basis of the report**

   a. With regard to the **language**, the international search was carried out on the basis of:

   ☒ the international application in the language in which it was filed.

   ☐ a translation of the international application into _____ which is the language of a translation furnished for the purposes of international search (Rules 12.3(a) and 23.1(b)).

   b. ☐ This international search report has been established taking into account the **rectification of an obvious mistake** authorized by or notified to this Authority under Rule 91 (Rule 43.6*bis*(a)).

   c. ☐ With regard to any **nucleotide and/or amino acid sequence** disclosed in the international application, see Box No. I.

2. ☐ **Certain claims were found unsearchable** (see Box No. II).

3. ☐ **Unity of invention is lacking** (see Box No. III).

4. With regard to the **title**,

   ☒ the text is approved as submitted by the applicant.

   ☐ the text has been established by this Authority to read as follows:

5. With regard to the **abstract**,

   ☒ the text is approved as submitted by the applicant.

   ☐ the text has been established, according to Rule 38.2, by this Authority as it appears in Box No. IV. The applicant may, within one month from the date of mailing of this international search report, submit comments to this Authority.

6. With regard to the **drawings**,

   a. the figure of the **drawings** to be published with the abstract is Figure No. 4

   ☒ as suggested by the applicant.

   ☐ as selected by this Authority, because the applicant failed to suggest a figure.

   ☐ as selected by this Authority, because this figure better characterizes the invention.

   b. ☐ none of the figures is to be published with the abstract.

INTERNATIONAL SEARCH REPORT

International application No.
PCT/US2011/034845

A. CLASSIFICATION OF SUBJECT MATTER
IPC(8) - H04B 7/185 (2011.01)
USPC - 455/12.1
According to International Patent Classification (IPC) or to both national classification and IPC

B. FIELDS SEARCHED

Minimum documentation searched (classification system followed by classification symbols)
IPC(8) - H04B 7/14, 185, 19, 195; 10/00, 105; H04L 5/00; H04Q 7/00; H04W 16/00, 40/00 (2011.01)
USPC - 342/352, 358; 370/230, 316, 328, 330, 347; 375/132, 138; 455/12.1, 13.1, 73, 427, 428, 429

Documentation searched other than minimum documentation to the extent that such documents are included in the fields searched

Electronic data base consulted during the international search (name of data base and, where practicable, search terms used)
PatBase, Google Patent, Google Scholar, EBSCO

C. DOCUMENTS CONSIDERED TO BE RELEVANT

Category*	Citation of document, with indication, where appropriate, of the relevant passages	Relevant to claim No.
A	US 6,522,643 B1 (JACOMB-HOOD et al) 18 February 2003 (18.02.2003) entire document	1-37
A	US 2002/0159403 A1 (REDDY) 31 October 2002 (31.10.2002) entire document	1-37
A	US 2007/0135051 A1 (ZHENG et al) 14 June 2007 (14.06.2007) entire document	1-37
A	TORLAK et al. Fast Estimation of Weight Vectors to Optimize Multi-Transmitter Broadcast Channel Capacity. IEEE Transactions on Signal Processing, Volume 46, No. 1 January 1998 retrieved from the internet on [15 August 2011] entire document <URL: http://danube.ee.washington.edu/downloadable/hliu/00651228.pdf>	1-37
A	WO 98/32245 (TUCK) 23 July 1998 (23.07.1998) entire document	1-37

☐ Further documents are listed in the continuation of Box C. ☐

* Special categories of cited documents:
"A" document defining the general state of the art which is not considered to be of particular relevance
"E" earlier application or patent but published on or after the international filing date
"L" document which may throw doubts on priority claim(s) or which is cited to establish the publication date of another citation or other special reason (as specified)
"O" document referring to an oral disclosure, use, exhibition or other means
"P" document published prior to the international filing date but later than the priority date claimed
"T" later document published after the international filing date or priority date and not in conflict with the application but cited to understand the principle or theory underlying the invention
"X" document of particular relevance; the claimed invention cannot be considered novel or cannot be considered to involve an inventive step when the document is taken alone
"Y" document of particular relevance; the claimed invention cannot be considered to involve an inventive step when the document is combined with one or more other such documents, such combination being obvious to a person skilled in the art
"&" document member of the same patent family

Date of the actual completion of the international search	Date of mailing of the international search report
16 August 2011	26 AUG 2011
Name and mailing address of the ISA/US Mail Stop PCT, Attn: ISA/US, Commissioner for Patents P.O. Box 1450, Alexandria, Virginia 22313-1450 Facsimile No. 571-273-3201	Authorized officer: Blaine R. Copenheaver PCT Helpdesk: 571-272-4300 PCT OSP: 571-272-7774

Form PCT/ISA/210 (second sheet) (July 2009)

PATENT COOPERATION TREATY

From the
INTERNATIONAL SEARCHING AUTHORITY

To: MYMY HENDERSON
KILPATRICK TOWNSEND & STOCKTON LLP
TWO EMBARCADERO CENTER, 8TH FLOOR
SAN FRANCISCO, CA 94111-3834

PCT

WRITTEN OPINION OF THE
INTERNATIONAL SEARCHING AUTHORITY

(PCT Rule 43*bis*.1)

Date of mailing *(day/month/year)*	26 AUG 2011

Applicant's or agent's file reference	FOR FURTHER ACTION
81094-805718	See paragraph 2 below

International application No.	International filing date *(day/month/year)*	Priority date *(day/month/year)*
PCT/US2011/034845	02 May 2011	02 May 2010

International Patent Classification (IPC) or both national classification and IPC
IPC(8) - H04B 7/185 (2011.01)
USPC - 455/12.1

Applicant VIASAT, INC

1. This opinion contains indications relating to the following items:

- ☒ Box No. I Basis of the opinion
- ☐ Box No. II Priority
- ☐ Box No. III Non-establishment of opinion with regard to novelty, inventive step and industrial applicability
- ☐ Box No. IV Lack of unity of invention
- ☒ Box No. V Reasoned statement under Rule 43*bis*.1(a)(i) with regard to novelty, inventive step or industrial applicability; citations and explanations supporting such statement
- ☐ Box No. VI Certain documents cited
- ☐ Box No. VII Certain defects in the international application
- ☐ Box No. VIII Certain observations on the international application

2. **FURTHER ACTION**

If a demand for international preliminary examination is made, this opinion will be considered to be a written opinion of the International Preliminary Examining Authority ("IPEA") except that this does not apply where the applicant chooses an Authority other than this one to be the IPEA and the chosen IPEA has notified the International Bureau under Rule 66.1*bis*(b) that written opinions of this International Searching Authority will not be so considered.

If this opinion is, as provided above, considered to be a written opinion of the IPEA, the applicant is invited to submit to the IPEA a written reply together, where appropriate, with amendments, before the expiration of 3 months from the date of mailing of Form PCT/ISA/220 or before the expiration of 22 months from the priority date, whichever expires later.

For further options, see Form PCT/ISA/220.

Name and mailing address of the ISA/US	Date of completion of this opinion	Authorized officer:
Mail Stop PCT, Attn: ISA/US Commissioner for Patents P.O. Box 1450, Alexandria, Virginia 22313-1450 Facsimile No. 571-273-3201	16 August 2011	Blaine R. Copenheaver PCT Helpdesk: 571-272-4300 PCT OSP: 571-272-7774

Form PCT/ISA/237 (cover sheet) (July 2011)

WRITTEN OPINION OF THE INTERNATIONAL SEARCHING AUTHORITY

International application No.
PCT/US2011/034845

Box No. I Basis of this opinion

1. With regard to the **language**, this opinion has been established on the basis of:

   ☒ the international application in the language in which it was filed.

   ☐ a translation of the international application into _____ which is the language of a translation furnished for the purposes of international search (Rules 12.3(a) and 23.1(b)).

2. ☐ This opinion has been established taking into account the **rectification of an obvious mistake** authorized by or notified to this Authority under Rule 91 (Rule 43*bis*.1(a))

3. With regard to any **nucleotide and/or amino acid sequence** disclosed in the international application, this opinion has been established on the basis of a sequence listing filed or furnished:

   a. (means)

      ☐ on paper

      ☐ in electronic form

   b. (time)

      ☐ in the international application as filed

      ☐ together with the international application in electronic form

      ☐ subsequently to this Authority for the purposes of search

4. ☐ In addition, in the case that more than one version or copy of a sequence listing has been filed or furnished, the required statements that the information in the subsequent or additional copies is identical to that in the application as filed or does not go beyond the application as filed, as appropriate, were furnished.

5. Additional comments:

WRITTEN OPINION OF THE INTERNATIONAL SEARCHING AUTHORITY

International application No.
PCT/US2011/034845

Box No. V **Reasoned statement under Rule 43*bis*.1(a)(i) with regard to novelty, inventive step or industrial applicability; citations and explanations supporting such statement**

1. Statement

Novelty (N)	Claims	1-37	YES
	Claims	None	NO
Inventive step (IS)	Claims	1-37	YES
	Claims	None	NO
Industrial applicability (IA)	Claims	1-37	YES
	Claims	None	NO

2. Citations and explanations:

Claims 1-37 meet the criteria set out in PCT Article 33(2)-(3), because the prior art does not teach or fairly suggest:

Regarding claims 1, 8, 15 and 23 the features of specifying a weight set and a beam hop frame definition for a beam hopping frame, the beam hopping frame comprising a plurality of timeslots, the specified weight set comprising a plurality of receive weight vectors and a plurality of transmit weight vectors for generating uplink beam signals and downlink beam signals in timeslots of the beam hopping frame, the specified beam hop frame definition defining a plurality of sequential dwell times and a plurality of pathway gains, each timeslot associated with a dwell time; and operating the satellite to generate the uplink beam signals and downlink beam signals for pathways in accordance with the specified weight set and the specified beam hop frame definition, wherein the specified weight set and the specified beam hop frame definition support an allocation of capacity between forward traffic, from at least one gateway to a plurality of terminals, and return traffic, from a plurality of terminals to at least one gateway.

Regarding claims 30, 32, 34 and 36 the features of specifying a first weight set and a first beam hop frame definition for a beam hopping frame, the beam hopping frame comprising a plurality of timeslots, the specified first weight set comprising a first plurality of receive weight vectors and a first plurality of transmit weight vectors for generating uplink beam signals and downlink beam signals in timeslots of the beam hopping frame, the specified first beam hop frame definition defining a first plurality of sequential dwell times and a first plurality of pathway gains, each timeslot associated with a dwell time; operating the satellite to generate the uplink beam signals and downlink beam signals for pathways in accordance with the specified first weight set and the specified first beam hop frame definition; specifying a second weight set and a second beam hop frame definition for a beam hopping frame, the specified second weight set comprising a second plurality of receive weight vectors and a second plurality of transmit weight vectors for generating uplink beam signals and downlink beam signals in timeslots of the beam hopping frame, the specified second beam hop frame definition defining a second plurality of sequential dwell times and a second plurality of pathway gains; and switching from operation of the satellite in accordance with the specified first weight set and the specified first beam hop frame definition to operation of the satellite to generate the uplink beam signals and downlink beam signals for pathways in accordance with the specified second weight set and the specified second beam hop frame definition, wherein the specified first weight set and the specified first beam hop frame definition support first targets of coverage area and capacity allocation based on a first time based traffic estimate, and the specified second weight set and the specified second beam hop frame definition support second targets of coverage area and capacity allocation based on a second time-based traffic estimate.

The prior art teaches some of the concepts and/or aspects of the claim limitations as shown below, but does not teach the claim limitations in their entirety and as specifically recited in the each claim:

Jacomb-Hood et al. (US 6,522,643 B1) is in the field of beam-hopping satellite communications (title, abstract) and further teaches allocating time slots for cells based on dwell times (paragraphs 9-13), a multiple beam satellite system (figure 1 and paragraph 32), and the use of steering vectors (paragraph 34).
Reddy (US 2002/0159403 A1) is in the field of spot beam hopping packet scheduling (title) and further teaches using statistical weighting and prioritization capabilities (paragraph 13) and a satellite spot beam hopping packet scheduling system (paragraph 22).
Zheng et al. (US 2007/0135051 A1) is in the field of satellite communications (title, abstract) and further teaches the use of complex weights to define spot beams (paragraph 130), using complex weights to process received signals at the antennas of the satellite (paragraph 131), paragraph 135 discusses weight vectors used in the beam forming.
Torlak et al. are in the field of optimizing channel capacity in broadcasting (title, abstract) and further teaches finding weight vectors for each signal to maximize overall channel capacity (paragraph 1 under I. Introduction, page 243) in a system comprising multiple transmitters and antenna arrays (paragraph 2 under I. Introduction, page 243).

Regarding claims 2-7, 9-14, 16-22, 24-29, 31, 33, 35, 37, each claim depends from base claims 1, 8, 15, 23, 30, 32, 34, 36 respectively and therefore meet the criteria set out in PCT Article 33(2)-(3), for at least the same reasons as base claims 1, 8, 15, 23, 30, 32, 34, 36.

Claims 1-37 meet the criteria set out in PCT Article 33(4), and thus have industrial applicability because the subject matter claimed can be made or used in industry.

PCT Application No.: PCT-US2011-34845
Date of Search: 16 August 2011

Search History:

Limited Classification Search

The Patent Analyst performed a limited classification search within the following US, IPC, ECLA, or F-Term classification areas:

U.S. Class/Subclass(es): 342/352, 358
343
370/230, 316, 328, 330, 347
375/132, 138
455/12.1, 13.1, 73, 427, 428, 429

IPC (8) Class/Subclass(es): H04B 7/14, 185, 19, 195; 10/00, 105 (2011.01)
H04L 5/00 (2011.01)
H04Q 7/00 (2011.01)
H04W 16/00, 40/00 (2011.01)

See Global Search Results.

Global Patent Literature Text Search

The Patent Analyst performed the following global text search, which was not limited by classification but may or may not have been limited by other criteria:

PATBASE

Search history	
Search 1:	pd<20100502 (Results 100000)
Search 2:	(INV=("MILLER_MARK_J" OR "MILLER_MARK_J_S" OR "MILLER_MARK_JAMES" OR "PATEROS_CHARLES" OR "PATEROS_CHARLES_N")) (Results 52)
Search 3:	2 and satel* (Results 28)
Search 4:	2 and weigh* (Results 6)
Search 5:	2 and beam hop* (Results 0)
Search 6:	(PA=("VIASAT_CORP" OR "VIASAT_CORPORATION" OR "VIASAT_GEO_TECHNOLOGIE_INC" OR "VIASAT_INC" OR "VIASAT_INC_A_DELAWARE_CORP" OR "VIASAT_INC_A_DELAWARE_CORPORATION" OR "VIASAT_INC_CARLSBAD" OR "VIASAT_INC_US" OR "VIASAT_INCORPORATED" OR "VIASAT_MULTI_MEDIA_GMBH" OR "VIASAT_MULTI_MEDIA_GMBH_49808_LINGEN_DE" OR "VIASAT_MULTI_MEDIA_GMBH_LINGEN" OR "VIASAT_S_P_A" OR "VIASAT_SPA")) (Results 250)

Search 7:	6 and hub%spoke (Results 10)
Search 8:	6 and weigh* (Results 59)
Search 9:	8 and satel* (Results 52)
Search 10:	9 and (frame* or timesl* or slot*) (Results 36)
Search 11:	ft=hub%spoke* and bent%pip* (Results 2)
Search 12:	ft=satellite* and communicat* and path* and frame* and (time%slot* or slot*) (Results 7600)
Search 13:	12 and weigh* (Results 3214)
Search 14:	13 and dwell* (Results 279)
Search 15:	14 and capacit* (Results 234)
Search 16:	15 and allocat* near capac* (Results 14)
Search 17:	12 and beam hop* (Results 9)
Search 18:	pn=(WO2008/109860 or WO2004/073229 or EP1089459 or wo99/49590) (Results 4)
Search 19:	ft= beam hop* (Results 58)
Search 20:	uc=342/352 (Results 452)
Search 21:	uc=342/358 (Results 201)
Search 22:	uc=370/230 (Results 3378)
Search 23:	uc=370/316 (Results 635)
Search 24:	uc=370/328 (Results 6602)
Search 25:	uc=370/330 (Results 981)
Search 26:	uc=370/347 (Results 1722)
Search 27:	uc=375/132 (Results 566)

Search 28:	uc=375/138 (Results 120)
Search 29:	uc=455/12.1 (Results 1483)
Search 30:	uc=455/13.1 (Results 630)
Search 31:	uc=455/73 (Results 1453)
Search 32:	uc=455/427 (Results 913)
Search 33:	uc=455/428 (Results 745)
Search 34:	uc=455/429 (Results 177)
Search 35:	uc=343* (Results 31628)
Search 36:	(20 or 21 or 22 or 23 or 24 or 25 or 26 or 27 or 28 or 29 or 30 or 31 or 32 or 33 or 34 or 35) (Results 48844)
Search 37:	36 and vector* near (trans* or rece*) (Results 1150)
Search 38:	37 and dwell* (Results 55)
Search 39:	37 and weigh* (Results 527)
Search 40:	39 and frame* and (time%slot* or slot*) (Results 188)
Search 41:	36 and beam* (Results 11582)
Search 42:	41 and estimat* (Results 1811)
Search 43:	41 and path* near (gain* or amplif*) (Results 274)
Search 44:	43 and frame* and (time%slot* or slot*) (Results 68)
Search 45:	ic=H04B7/14 (Results 5369)
Search 46:	ic=H04B7/185 (Results 7870)
Search 47:	ic=H04B7/19 (Results 475)
Search 48:	ic=H04B7/195 (Results 363)

Search 49:	ic=H04B10/00 (Results 17484)
Search 50:	ic=H04B10/105 (Results 5214)
Search 51:	ic=H04L5/00 (Results 5900)
Search 52:	ic=H04Q7/00 (Results 11857)
Search 53:	ic=H04W16/00 (Results 5664)
Search 54:	ic=H04W40/00 (Results 2259)
Search 55:	(45 or 46 or 47 or 48 or 49 or 50 or 51 or 52 or 53 or 54) (Results 58568)
Search 56:	55 and vector* near (trans* or rece*) (Results 1331)
Search 57:	56 and dwell* (Results 35)
Search 58:	56 and weigh* (Results 662)
Search 59:	58 and frame* and (time%slot* or slot*) (Results 214)
Search 60:	55 and beam* (Results 8638)
Search 61:	60 and estimat* (Results 2393)
Search 62:	61 and path* near (gain* or amplif*) (Results 139)
Search 63:	61 and frame* and (time%slot* or slot*) (Results 767)
Search 64:	63 and hop* (Results 289)
Search 65:	64 and weigh* (Results 168)
Search 66:	55 and flex* near capacit* (Results 212)

GOOGLE PATENT http://www.google.com/patents

No. of Hits	Text String
31	flexible bent pipe satellite communication
3	weight set and weight vectors and beam hopping frame

100+	satellite communication and weight vectors
78	beam hopping and satellite communication and increased capacity
100+	increased capacity satellite communications
29	weight sets and traffic estimates and satellite communication
100+	capacity allocation and weight vectors
66	pathways and weight vectors and satellite
3	transmit weights and frame definition and beam hopping
54	beam hopping and traffic estimate
19	hopping frame and weight vector

Computer Accessed Text Databases Searched

The Patent Analyst searched the following computer accessed text databases:

Google Scholar: http://scholar.google.com/

No. of Hits	Text String
100+	flexible satellite weighted vector communication
100+	flexible capacity satellite communications
1	flexible allocation and satellite communications
12	IC "517410" and weight vector

EBSCO: http://web.ebscohost.com/

No. of Hits	Text String
100+	weight vectors and beam hopping and satellite communications
100+	flexible capacity satellite communications
100+	capacity allocation and bent pipe satellite
100+	satellite communications and dwell times and weight vectors

Date search was completed: 16 August 2011

JM/JG

of image complexity. In addition, *ModLVQ* generates better quality visual results in areas of images that contain plenty of detail whether or not the entire image is generally busy or smooth.

REFERENCES

[1] J. H. Conway and N. J. A. Sloane, *Sphere Packings, Lattices and Groups*. New York: Springer-Verlag, 1988.

[2] J. Knipe, "Improved spatial and transform domain compression schemes," Master's thesis, Univ. Alberta, Edmonton, Alta, Canada, 1996.

[3] Y. Linde, A. Buzo, and R. M. Gray, "An algorithm for vector quantizer design," *IEEE Trans. Commun.*, vol. COMM-28, pp. 84–95, 1980.

[4] F. J. MacWilliams and N. J. A. Sloane, *The Theory of Error Correcting Codes*. Amsterdam, The Netherlands: North-Holland, 1978.

[5] A. Said and W. A. Pearlman, "A new fast and efficient image codec based on set partitioning in hierarchical trees," *IEEE Trans. Circuits Syst. Video Technol.*, vol. 6, pp. 243–250, Sept. 1996.

[6] D. G. Sampson, E. A. B. da Silva, and M. Ghanbari, "Wavelet transform image coding using lattic vector quatnization," *Electron. Lett.*, vol. 30, no. 18, pp. 1477–1478, 1994.

[7] J. M. Shapiro, "Embedded image coding using zerotrees of wavelet coefficients," *IEEE Trans. Signal Processing*, vol. 41, pp. 3445–3462, Dec. 1993.

Fast Estimation of Weight Vectors to Optimize Multi-Transmitter Broadcast Channel Capacity

Murat Torlak, Guanghan Xu, Brian L. Evans, and Hui Liu

***Abstract*—We improve capacity of broadcast channels by employing multiple transmitters and exploiting the spatial diversity among the users. We derive fast algorithms to compute *orthogonal*, *near-optimal*, and *optimal* weight vectors for broadcasting message signals to two and three users. The key innovation is that we decouple the weight vectors in the measure of channel capacity to 1) simplify the optimization problem to a search for the maxima of a smooth multidimensional function and 2) derive closed-form expressions for the orthogonal and near-optimal algorithms.**

***Index Terms*— Antenna array, broadcast channel, channel capacity, SDMA.**

I. INTRODUCTION

During the 1990's, the demand for wireless communications and mobile cellular communications has dramatically increased. One way to increase the capacity and improve the performance of existing wireless communications systems is to incorporate the use of spatial diversity. Since Cover's novel work in single-transmitter broadcast channels [1], researchers have been exploring the use of both multitransmitter and multireceiver systems [2], [3]. In a multitransmitter broadcast channel, an antenna array transmits to two or more receiving users. To optimize the performance of the communications system, we must find the weight vector for each message signal that maximizes the overall channel capacity. In this correspondence, we assume independent decoding since it is more feasible to implement in practical systems than joint decoding.

Recently, wireless communication systems using antenna arrays, called spatial diversity multiple access (SDMA) systems [4]–[7], have been exploiting spatial diversity among the users. The design of the weight vectors that maximize the overall channel capacity of the broadcast channels, however, is still an open problem. The primary reason is that under certain power constraints, the channel capacity R is a highly nonlinear function of the M-dimensional weight vectors $\{\mathbf{w}_i\}$, where M is the number of transmitters [8].

In this correspondence, we decouple the weight vectors in R to reduce the optimization problem to a search for the maxima of a smooth multidimensional function, which has $P(P-1)$ dimensions for P users. Based on this decoupling, we derive two algorithms

Manuscript received May 28, 1997; revised July 10, 1997. This work was supported in part by an NSF CAREER Award under Grant MIP-9502695, ONR Grant N00014-95-1-0638, JSEP Contract F49620-95-C-0045, Motorola, Inc., Southwestern Bell Technology Resources, Inc., Texas Instruments, Nortel, NSF CAREER Award under Grant MIP-9702707, a University of Texas Austin Summer Research Assignment Grant, a Shell Oil Foundation Grant, AFOSR Grant F49620-97-1-0318, ONR Grant N00014-97-1-0475. The United States Government is authorized to reproduce and distribute reprints for governmental purposes notwithstanding any copyright restrictions hereon.

M. Torlak, G. Xu, and B. L. Evans are with the Department of Electrical and Computer Engineering, The University of Texas at Austin, Austin, TX 78712-1084 USA (e-mail: torlak@ece.utexas.edu; xu@ece.utexas.edu; bevans@ece.utexas.edu).

H. Liu is with the Department of Electrical Engineering, University of Virginia, Charlottesville, VA 22903-2442 USA (e-mail: hl3r@shamu.ee.virginia.edu).

Publisher Item Identifier S 1053-587X(98)00524-8.

1053–587X/98$10.00 © 1998 IEEE

for computing orthogonal and optimal weight vectors for the two-user and three-user cases: orthogonal and optimal. We also present a near-optimum algorithm for two-user case. The optimal algorithm requires an iterative search, whereas the orthogonal and near-optimal algorithms rely on closed-form solutions.

II. Background

In [8], we consider maximizing the channel capacity in a two-user broadcast system with multiple transmitters. Now, we consider more general problem formulation. We let $\{s_i(t)\}$ be the message signals. The base station weights each message signal with a *weight* vector and then transmits the superimposed signal from an array with M elements

$$\mathbf{y}(t) = \sum_{i=1}^{d} \beta_i \mathbf{w}_i s_1(t).$$

The signals $\{s_i(t)\}$ are assumed to be i.i.d. with Gaussian distribution; $\{\mathbf{w}_i\}$ are normalized weight vectors, i.e., $\|\mathbf{w}_i\| = 1$, $i = 1, \cdots, d$; and $\{\beta_i\}$ are the transmitting magnitudes that are subject to certain power constraints. For simplicity, we assume

$$\beta_1^2 + \cdots + \beta_d^2 = 1.$$

If the user receivers employ independent decoding, then the achievable channel capacity for each user can be expressed as $\log(1 + \text{SINR})$, where SINR is the signal-to-interference noise ratio

$$R_i = \frac{1}{2} \log \left(1 + \frac{\alpha_i^2 \beta_i^2 \mathbf{w}_i^H \mathbf{a}_i \mathbf{a}_i^H \mathbf{w}_i}{1 + \sum_{j=1, j \neq i}^{d} \alpha_i^2 \beta_j^2 \mathbf{w}_j^H \mathbf{a}_i \mathbf{a}_i^H \mathbf{w}_j} \right) \tag{1}$$

where $\mathbf{a}_i = (a_{i,1} a_{i,2} \cdots a_{i,M})^T$ is a unit vector representing the direction of the spatial signature vector of the ith user, and α_i is the magnitude of the spatial signature vector of the ith user. The spatial signature vector, which is also known as the steering vector, of the ith user represents the propagation pattern of the ith user and is equal to $\alpha_i \mathbf{a}_i$. The noise power has been normalized to unity.

The goal is to select the weight vectors $[\mathbf{w}_1 \cdots \mathbf{w}_d]$ that maximize the total channel capacity $R_1 + \cdots + R_d$. Maximizing the total channel capacity is different from maximizing the SINR for each user. Maximizing the SINR is a first-order approximation to the total channel capacity in (1) as it is the first term in the Taylor series for $\log(1 + \text{SINR})$. To a first-order approximation, (1) is equal to $\text{SINR}_1 + \cdots + \text{SINR}_d$, which is the total SINR.

III. Decoupling Weight Vectors

Theorem 1: The optimal weight vectors that maximize the channel capacity are in the range space (signal subspace) of $\mathbf{A}$ and can be written as a linear combination of spatial signature vectors.

Proof:

$$\mathbf{w}_i = \lambda_{ai} \mathbf{A} + \lambda_{bi} \mathbf{B} \tag{2}$$

where $\mathbf{A} = [\mathbf{a}_1 \cdots \mathbf{a}_d]$ is the spatial signature matrix; $\mathbf{B} = [\mathbf{b}_{d+1} \cdots \mathbf{b}_M]$, which denotes the orthogonal subspace of $\mathbf{A}$, i.e., $\mathbf{A} \perp \mathbf{B}$; $\lambda_{ai} = [\lambda_{ai,1} \cdots \lambda_{ai,d}]$, and $\lambda_{bi} = [\lambda_{bi,d+1} \cdots \lambda_{bi,M}]$. Clearly, we must show that $\|\lambda_{bi}\|^2 = 0$. Based on (1), $\{\lambda_{bi}\}$ does not directly contribute to $\kappa_{ij} = \mathbf{w}_j^H \mathbf{a}_i \mathbf{a}_i^H \mathbf{w}_j$, as described in the next section; however, $\{\lambda_{bi}\}$ is in the power constraint

$$\|\mathbf{w}_i\| = \|\lambda_{ai}\|^2 + \|\lambda_{bi}\|^2 = 1. \tag{3}$$

It is obvious that $\|\lambda_{bi}\|^2 = 0$ should be true not to waste any energy in the orthogonal subspace. A similar theorem is also applicable to the case in which the average SINR is maximized [9]. □

IV. Two-User Case

For a given (β_1, β_2) pair and a given $(\mathbf{a}_1, \mathbf{a}_2)$ pair, our goal is to find the weight vectors $\mathbf{w}_1$ and $\mathbf{w}_2$ that optimize the total channel capacity $R = R_1 + R_2$. Denote

$$\begin{aligned} \kappa_{11} &= \mathbf{w}_1^H \mathbf{a}_1 \mathbf{a}_1^H \mathbf{w}_1 \quad \kappa_{12} = \mathbf{w}_2^H \mathbf{a}_1 \mathbf{a}_1^H \mathbf{w}_2 \\ \kappa_{21} &= \mathbf{w}_1^H \mathbf{a}_2 \mathbf{a}_2^H \mathbf{w}_1 \quad \kappa_{22} = \mathbf{w}_2^H \mathbf{a}_2 \mathbf{a}_2^H \mathbf{w}_2 \end{aligned} \tag{4}$$

where $\kappa_{ij} = \cos^2 \angle(\mathbf{w}_i, \mathbf{a}_j)$ is a measure of the angle between the ith weight vector and the jth spatial signature vector. Thus, each κ_{ij} term is confined to [0, 1].

It is seen from (1) that for certain κ_{11} and κ_{22}, R is optimal if the relationship between $\kappa_{21} = \mathbf{w}_1^H \mathbf{a}_2 \mathbf{a}_2^H \mathbf{w}_1 = \cos^2 \angle(\mathbf{w}_1, \mathbf{a}_2)$ and $\kappa_{12} = \mathbf{w}_2^H \mathbf{a}_1 \mathbf{a}_1^H \mathbf{w}_2 = \cos^2 \angle(\mathbf{w}_2, \mathbf{a}_1)$ are determined. The focus of the problem is to find the maximum values of κ_{11} and κ_{22} in terms of κ_{21} and κ_{12} or to find the minimum values of κ_{21} and κ_{12} in terms of κ_{11} and κ_{22}, respectively. The relationship between can be found by substituting (3) into the first two equations in (4) and $\mathbf{w}_1^H \mathbf{w}_1 = 1$

$$\begin{aligned} \lambda_{11}^2 + \lambda_{12}^2 + 2\lambda_{11}\lambda_{12}\sqrt{\zeta} &= 1 \\ \lambda_{11}^2 + \lambda_{12}^2 \zeta + 2\lambda_{11}\lambda_{12}\sqrt{\zeta} &= \kappa_{11} \\ \lambda_{11}^2 \zeta + \lambda_{12}^2 \zeta + 2\lambda_{11}\lambda_{12}\sqrt{\zeta} &= \kappa_{21} \end{aligned} \tag{5}$$

where

$$\zeta = \mathbf{a}_1^H \mathbf{a}_2 \mathbf{a}_2^H \mathbf{a}_1 = \cos^2 \angle(\mathbf{a}_1, \mathbf{a}_2) \tag{6}$$

so that $0 \leq \zeta \leq 1$. Although $\{\lambda_{ij}\} = r_{\lambda_{ij}} e^{j\theta_{\lambda_{ij}}}$ and $\mathbf{a}_1^H \mathbf{a}_2 = \sqrt{\zeta} e^{\theta\zeta}$ are usually complex numbers, we can always adjust the phases to cancel out each other without affecting the values of κ_{ij} and the norm of weight vectors and spatial signature vectors. Therefore, we can solve the equations in (5) for absolute values of λ_{11}, λ_{12}, and κ_{11}. We find the relation between κ_{11} and κ_{21} as

$$\kappa_{11} = \left[\sqrt{\zeta \kappa_{21}} + \sqrt{(1-\zeta)(1-\kappa_{21})} \right]^2. \tag{7}$$

We obtained these results using Lagrange multipliers [8]. By following the same procedure for $\mathbf{w}_2$, we find a similar function for $\mathbf{w}_2$. We rewrite the channel capacity in terms of κ_{12} and κ_{21}.

The optimization problem is to maximize

$$\begin{aligned} &\frac{1}{2} \log \left\{ 1 + \frac{\gamma_{11} \left[\sqrt{\zeta \kappa_{21}} + \sqrt{(1-\zeta)(1-\kappa_{21})} \right]^2}{1 + \gamma_{12} \kappa_{12}} \right\} \\ &+ \frac{1}{2} \log \left\{ 1 + \frac{\gamma_{22} \left[\sqrt{\zeta \kappa_{12}} + \sqrt{(1-\zeta)(1-\kappa_{12})} \right]^2}{1 + \gamma_{21} \kappa_{21}} \right\} \end{aligned} \tag{8}$$

with respect to κ_{12} and κ_{21} subject to the constraints

$$\begin{aligned} 0 \leq \kappa_{12} \leq \zeta \leq 1 \\ 0 \leq \kappa_{21} \leq \zeta \leq 1 \end{aligned} \tag{9}$$

where

$$\begin{aligned} \zeta &= \mathbf{a}_1^H \mathbf{a}_2 \mathbf{a}_2^H \mathbf{a}_1 = \cos^2 \angle(\mathbf{a}_1, \mathbf{a}_2) \\ \gamma_{ij} &= \alpha_i^2 \beta_j^2 \qquad \text{for } i, j = 1, 2. \end{aligned} \tag{10}$$

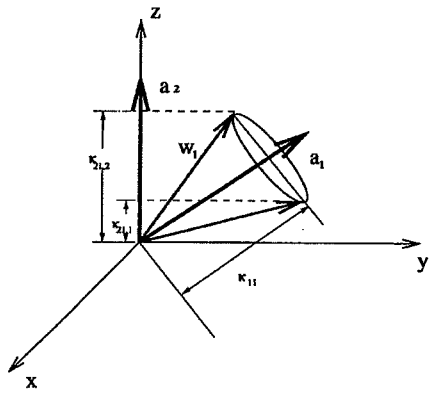

Fig. 1. Illustration of search for a optimal weight vector.

A. Orthogonal Weight Vector Algorithm

Due to the additional degrees of freedom introduced by multiple transmitters, one can manipulate the complex weight vectors to enhance the desired signal and, at the same time, suppress the interference. There exists $\mathbf{w}_i$ such that $\mathbf{w}_i^H \mathbf{a}_i = \delta_{ij}$, which can completely eliminate the interference from one to the other. When $\mathbf{w}_i^H \mathbf{a}_j = \delta(i, j)$, the channels are orthogonal, and each message can be transmitted without interference. As shown in Fig. 1, $\mathbf{w}_1$ should be in the direction of $\mathbf{P}_{\mathbf{a}_2}^{\perp} \mathbf{a}_1$, where $\mathbf{P}_{\mathbf{a}_2}^{\perp}$ denotes the projection operator to the orthogonal space of $\mathbf{a}_2$. Orthogonal weight vectors correspond to the following parameter values.

$$\kappa_{11} = 1 - \zeta \quad \kappa_{12} = 0$$
$$\kappa_{21} = 0 \quad \kappa_{22} = 1 - \zeta \tag{11}$$

However, this selection is generally not optimal in channel capacity since the desired signal power at the receiver may be reduced as well.

B. Optimal Weight Vector Algorithm

To find the optimal weight vectors, we maximize the nonlinear objective function (8) with respect to variables κ_{11} and κ_{22} subject to (10). The objective function and constraints are real-valued, continuous, and twice differentiable, and the solution space is convex. As a consequence, the optimization problem has a global maximum. Although a closed-form solution for the global maximum may not exist, numerical methods can be used to search for the global maximum. For example, the global optimum solution will always be found by the iterative sequential quadratic programming method [10]. An alternative iterative search algorithm is proposed here:

1) Choose values for κ_{12} and κ_{21}.
2) For the given $(\kappa_{12}, \kappa_{21})$ pair, find the legitimate $\mathbf{w}_1$, which maximizes $\cos^2 \angle(\mathbf{w}_1, \mathbf{a}_1)$, and $\mathbf{w}_2$, which maximizes $\cos^2 \angle(\mathbf{w}_2, \mathbf{a}_2)$. Evaluate R using (8).
3) Repeat Steps 1 and 2 for a finite number of times, and identify the optimal pair $(\kappa_{12,opt}, \kappa_{21,opt})$, which maximize R in (8).
4) The weight vectors that correspond to $\kappa_{12,opt}$ and $\kappa_{21,opt}$ in Step 2 are the solutions.

Step 3 involves only a 2-D search, which is tractable in general but computationally expensive. Next, we derive a near-optimum closed-form solution that is simple to compute.

C. Near-Optimal Weight Vector Algorithm

After substituting $\kappa_{21} = \cos^2(\theta_2)$, $\kappa_{12} = \cos^2(\theta_1)$, and $\zeta = \cos^2(\phi)$ into (8) and performing logarithmic manipulations, the

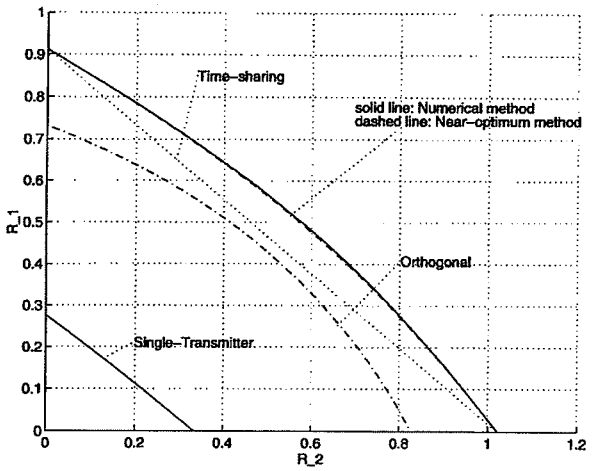

Fig. 2. Channel capacities using different weight vectors.

channel capacity can be rewritten as

$$\frac{1}{2}\log[\mathbf{J}(\theta_1, \theta_2)] = \frac{1}{2}\log\left\{\left[1 + \frac{\gamma_{11}\cos(\theta_2 - \phi)^2}{1 + \gamma_{12}\cos(\theta_1)^2}\right] \times \left[1 + \frac{\gamma_{22}\cos(\theta_1 - \phi)^2}{1 + \gamma_{21}\cos(\theta_2)^2}\right]\right\}. \tag{12}$$

The maximum total capacity of a two-user broadcasting system depends on the angles θ_1 and θ_2 between the weight vectors and the spatial signature vectors, as seen in (4). Since the logarithm is a monotonically increasing one-to-one function over the positive numbers, maximizing the total channel capacity in (12) is equivalent to maximizing $\mathbf{J}(\theta_1, \theta_2)$. A good initial guess at the optimum value is $\theta_1 = \phi$ and $\theta_2 = \phi$, which are the left endpoints of κ_{12} and κ_{21}, respectively, because they bring the cosine terms in the numerators in (12) to 1. We refine this approximation using perturbation (sensitivity) analysis to find the local optimal value [8]. The near-optimum angle between the ith weight vector and the jth spatial signature vector is

$$\theta_i = \phi + 2\cos^2(\phi)\Delta\theta_i \tag{13}$$

where

$$\Delta\theta_i = \frac{\gamma_{ji}\gamma_{jj}\cos(\phi)\sin(\phi)[1 + \gamma_{ii} + \gamma_{ij}\cos^2(\phi)]}{\gamma_{ii}[1 + \gamma_{ji}\cos^2(\phi)][1 + \gamma_{jj} + \gamma_{ji}\cos^2(\phi)]} \tag{14}$$

where $i, j = 1, 2$ and $i \neq j$. Since the perturbation analysis returns an approximation of the local optimum angles, the boundary conditions must be explicitly checked to ensure that the local optimum value is a local maximum. For each angle, two boundary conditions on k_{ij} (i.e., $\theta_i = \phi$ and $\theta_i = \pi$) and one local optimum value [i.e., θ_i in (13)] exist. With two angles, a total of nine angle pairs (three times three) must be substituted into $\mathbf{J}(\theta_1, \theta_2)$, and the pair that produces the largest $\mathbf{J}(\theta_1, \theta_2)$ value is the local maximum.

Using the closed-form solutions in (13), the near-optimum weight vectors can be found in the following steps.

1) Compute $\zeta = \cos^2(\phi)$ in (6) using the given $(\mathbf{a}_1, \mathbf{a}_2)$ spatial signature pair.
2) For $i = 1, 2$ and $j = 1, 2$, compute γ_{ij} in (10) using the given (α_i, β_j) values.
3) Compute near-optimum θ_1 and θ_2 angles in (13) and (14).
4) Check boundary conditions and near-optimum angle values by substituting all nine possible angle pairs for $\mathbf{J}(\theta_1, \theta_2)$ in (12), and keep the angle pair (θ_1', θ_2') that maximizes $\mathbf{J}(\theta_1, \theta_2)$.
5) The weight vectors corresponding to (θ_1', θ_2') are the solutions.

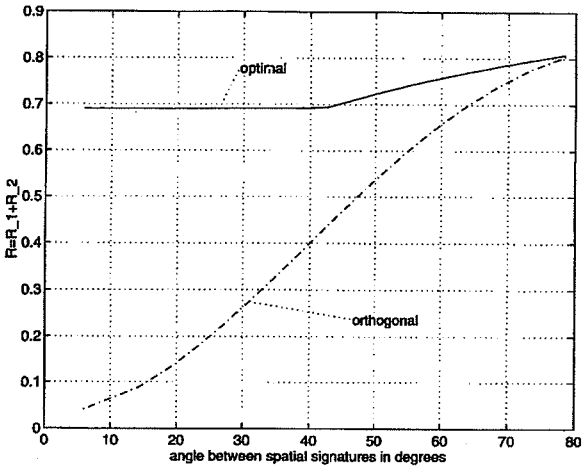

Fig. 3. Maximum channel capacities versus ϕ.

V. Three-User Case

For the three-user case, our goal again is to maximize the total channel capacity $R = R_1 + R_2 + R_3$. As in the two-user case, denote

$$\kappa_{ji} = \cos^2 \angle(\mathbf{w}_i, \mathbf{a}_j). \tag{15}$$

Now, the focus of the problem is to find the relationship between κ_{ii} and $\{\kappa_{ji}, j \neq i\}$. Applying Theorem 1, we derive the relation between κ_{11} and $(\kappa_{21}, \kappa_{31})$ as

$$\begin{aligned}\kappa_{11} = \Big[&\sqrt{\zeta_{12}\kappa_{21}} - \sqrt{\zeta_{13}\zeta_{23}\kappa_{21}} + \sqrt{\zeta_{13}\kappa_{31}} - \sqrt{\zeta_{12}\zeta_{23}\kappa_{31}} \\ &+ \sqrt{(1-\zeta_{12}-\zeta_{13}+2\zeta_{12}\zeta_{13}\zeta_{23}-\zeta_{23})} \\ &\times\sqrt{(1-\zeta_{23}-\kappa_{21}+2\zeta_{23}\kappa_{21}\kappa_{31}-\kappa_{31})}\Big]^2/(1-\zeta_{23})^2\end{aligned} \tag{16}$$

where $\zeta_{ij} = \cos^2 \angle(\mathbf{a}_i, \mathbf{a}_j)$. Similar derivations can be carried out to find the relations between κ_{22} and $(\kappa_{12}, \kappa_{32})$ and between κ_{33} and $(\kappa_{13}, \kappa_{23})$. Using the relations, channel capacity can be expressed in terms of $(\kappa_{21}, \kappa_{31}, \kappa_{12}, \kappa_{32}, \kappa_{13}, \kappa_{23})$. For each k_{ii}, the solution amounts to solving a set of linear equations and substituting the result into $\mathbf{w}^H\mathbf{w} = 1$. The parameter values for orthogonal weight vectors are $\kappa_{ij} = 0, i \neq j$ and $\kappa_{11} = (1 - \zeta_{12} - \zeta_{13} + 2\zeta_{12}\zeta_{13}\zeta_{23} - \zeta_{23})/(1-\zeta_{23})$, and $(\kappa_{22}, \kappa_{33})$ can be found similar to κ_{11}. However, as in the two-user case, this selection is generally not optimal in channel capacity. To find optimal weight vectors for the three-user case, we have to maximize the channel capacity with respect to variables $(\kappa_{21}, \kappa_{31}, \kappa_{12}, \kappa_{32}, \kappa_{13}, \kappa_{23})$. A similar iterative algorithm in Section IV-B can be used to search for the maximum.

VI. Numerical Examples

First, we consider the case in which a linear uniform array with eight antenna elements is transmitting to two users. Fig. 2 compares the channel capacity of the orthogonal, near-optimal, and optimal weight vector algorithms with the single antenna and naive time-sharing approaches. In Fig. 2, the angle between spatial signature vectors and the gains of spatial signature vectors, respectively, are $\phi = 54$, $\alpha_1 = 1.22$, and $\alpha_2 = 1.333$. Second, we compare the maximum total capacity with the orthogonal and optimal weight vector algorithms with respect to the angle between the spatial signatures. As shown in Fig. 3, the difference becomes very significant when the angle between the spatial signature vectors is small.

VII. Conclusion

We use the weight vectors in multitransmitter broadcast systems to optimize the channel capacity R subject to power constraints. We prove that the optimal weight vectors lie in the signal subspace of the spatial signature matrix (i.e., the steering matrix). Instead of computing the signal subspace using eigendecomposition techniques, we decouple the weight vectors in R to reduce the optimization problem to a search for the maxima of a smooth multidimensional function. Based on this decoupling, we derive fast algorithms to compute *orthogonal*, *near-optimal*, and *optimal* weight vectors for two and three users.

References

[1] T. Cover and J. Thomas, *Elements of Information Theory*. New York: Wiley, 1991.
[2] P. Balaban and J. Salz, "Optimum diversity combining and equalization in digital data transmission with applications to cellular mobile radio—Part I: Theoretical considerations," *IEEE Trans. Commun.*, vol. 40, pp. 885–894, May 1992.
[3] S. Pillai, *Array Signal Processing*. New York: Springer-Verlag, 1989.
[4] P. Balaban and J. Salz, "Optimum diversity combining and equalization in data transmission with application to cellular mobile radio—Part II: Numerical results," *IEEE Trans. Commun.*, vol. 40, pp. 895–907, May 1992.
[5] G. Xu, H. Liu, W. Vogel, H. Lin, S. S. Jeng, and G. Torrence, "Experimental studies of space-division-multiple-access schemes for spectral efficient wireless communications," in *Proc. IEEE Int. Conf. Commun.*, May 1994, pp. 800–804.
[6] B. Suard, G. Xu, H. Liu, and T. Kailath, "Channel capacity of space-division-multiple-access schemes," in *Proc. IEEE Asilomar Conf. Signals, Syst., Comput.*, Pacific Grove, CA, Nov. 1994, pp. 1159–1163.
[7] ——, "Uplink channel capacity of space-division-multiple-access schemes," to be published.
[8] M. Torlak, G. Xu, B. Evans, and H. Liu, "Optimal weight vectors for broadcast channel," in *Proc. IEEE Asilomar Conf. Signals, Syst., Comput.*, Pacific Grove, CA, Nov. 1996.
[9] W. Yang and G. Xu, "A new method for designing smart antenna downlink weighting vectors with filter banks," in *SPIE Conf. Adv. Signal Process. Algorithms, Arch., Implement.*, San Diego, CA, July 1997.
[10] S. Wright, "Convergence of SQP-like methods for constrained optimization," *SIAM J. Contr. Optimiz.*, vol. 27, no. 1, pp. 13–26, Jan. 1989.

PCT WORLD INTELLECTUAL PROPERTY ORGANIZATION
International Bureau

INTERNATIONAL APPLICATION PUBLISHED UNDER THE PATENT COOPERATION TREATY (PCT)

(51) International Patent Classification 6 : H04B 7/204	A1	(11) International Publication Number: WO 98/32245
		(43) International Publication Date: 23 July 1998 (23.07.98)

(21) International Application Number: PCT/US97/00204

(22) International Filing Date: 17 January 1997 (17.01.97)

(71) Applicant: TELEDESIC LLC [US/US]; 2300 Carillon Point, Kirkland, WA 98033 (US).

(72) Inventor: TUCK, Edward, F.; 2412 East Crescent View Drive, West Covina, CA 91790 (US).

(74) Agent: BROWN, Ward; Christensen O'Connor Johnson & Kindness PLLC, Suite 2800, 1420 Fifth Avenue, Seattle, WA 98101 (US).

(81) Designated States: AL, AM, AT, AU, AZ, BA, BB, BG, BR, BY, CA, CH, CN, CU, CZ, DE, DK, EE, ES, FI, GB, GE, HU, IL, IS, JP, KE, KG, KP, KR, KZ, LC, LK, LR, LS, LT, LU, LV, MD, MG, MK, MN, MW, MX, NO, NZ, PL, PT, RO, RU, SD, SE, SG, SI, SK, TJ, TM, TR, TT, UA, UG, UZ, VN, ARIPO patent (KE, LS, MW, SD, SZ, UG), Eurasian patent (AM, AZ, BY, KG, KZ, MD, RU, TJ, TM), European patent (AT, BE, CH, DE, DK, ES, FI, FR, GB, GR, IE, IT, LU, MC, NL, PT, SE), OAPI patent (BF, BJ, CF, CG, CI, CM, GA, GN, ML, MR, NE, SN, TD, TG).

Published
With international search report.

(54) Title: METHOD FOR CONTROLLING THE TRANSMISSION OF A BEAM OF RADIATED ENERGY IN A CELLULAR SATELLITE SYSTEM

(57) Abstract

Satellite footprints (16a, 16b, 16c) are partitioned into elongate spanning cells (18) and multiple elongate segments (22). The elongate spanning cells (18) resemble long strips that extend along an entire footprint (16a, 16b, 16c). The alignment of the elongate spanning cells (18) along a footprint (16a, 16b, 16c) is determined by a correction angle Φ, which compensates for the changing relative motion of the Earth's surface at various latitudes.

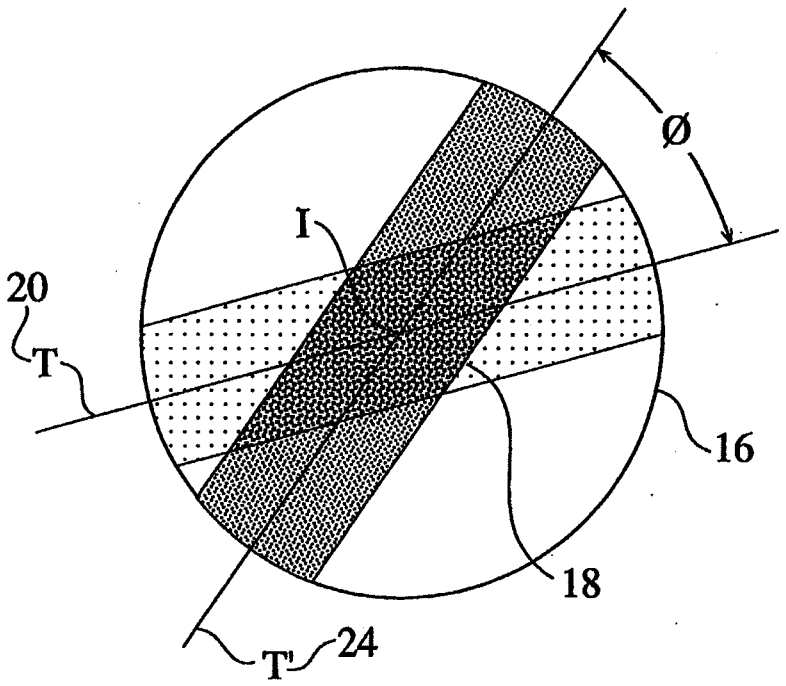

FOR THE PURPOSES OF INFORMATION ONLY

Codes used to identify States party to the PCT on the front pages of pamphlets publishing international applications under the PCT.

AL	Albania	ES	Spain	LS	Lesotho	SI	Slovenia
AM	Armenia	FI	Finland	LT	Lithuania	SK	Slovakia
AT	Austria	FR	France	LU	Luxembourg	SN	Senegal
AU	Australia	GA	Gabon	LV	Latvia	SZ	Swaziland
AZ	Azerbaijan	GB	United Kingdom	MC	Monaco	TD	Chad
BA	Bosnia and Herzegovina	GE	Georgia	MD	Republic of Moldova	TG	Togo
BB	Barbados	GH	Ghana	MG	Madagascar	TJ	Tajikistan
BE	Belgium	GN	Guinea	MK	The former Yugoslav Republic of Macedonia	TM	Turkmenistan
BF	Burkina Faso	GR	Greece			TR	Turkey
BG	Bulgaria	HU	Hungary	ML	Mali	TT	Trinidad and Tobago
BJ	Benin	IE	Ireland	MN	Mongolia	UA	Ukraine
BR	Brazil	IL	Israel	MR	Mauritania	UG	Uganda
BY	Belarus	IS	Iceland	MW	Malawi	US	United States of America
CA	Canada	IT	Italy	MX	Mexico	UZ	Uzbekistan
CF	Central African Republic	JP	Japan	NE	Niger	VN	Viet Nam
CG	Congo	KE	Kenya	NL	Netherlands	YU	Yugoslavia
CH	Switzerland	KG	Kyrgyzstan	NO	Norway	ZW	Zimbabwe
CI	Côte d'Ivoire	KP	Democratic People's Republic of Korea	NZ	New Zealand		
CM	Cameroon			PL	Poland		
CN	China	KR	Republic of Korea	PT	Portugal		
CU	Cuba	KZ	Kazakstan	RO	Romania		
CZ	Czech Republic	LC	Saint Lucia	RU	Russian Federation		
DE	Germany	LI	Liechtenstein	SD	Sudan		
DK	Denmark	LK	Sri Lanka	SE	Sweden		
EE	Estonia	LR	Liberia	SG	Singapore		

METHOD FOR CONTROLLING THE TRANSMISSION OF A BEAM OF RADIATED ENERGY IN A CELLULAR SATELLITE SYSTEM

TECHNICAL FIELD

The present invention relates to the field of satellites. More particularly, this invention provides methods of conveying and controlling a beam of radiated energy to or from a satellite orbiting the Earth in an orbit which is not an Equatorial orbit at geosynchronous altitude. The present invention offers optimized frequency utilization and enhanced availability, capacity and reliability of remote sensing and communication services.

BACKGROUND ART

Over the past few years, several satellite communication systems have been proposed. These systems are generally designed to enhance existing terrestrial cellular networks. Cellular telephone networks utilize fixed transmitting and receiving stations located in adjacent cells. Some of the satellite communication systems that will be launched later in this decade will rely on satellites operating in low Earth orbits. In cellular networks, the central transmitting and receiving antennas are stationary, and subscribers may communicate with one another while moving from cell to cell. A low Earth orbit network also allows subscribers to move, but the transmitting and receiving antennas aboard each satellite in the network are constantly in motion. Unlike some earlier communications systems which employed satellites in geosynchronous orbits, the spacecraft in low Earth orbit will move rapidly across the sky over any given place on the ground. Since the position of a low Earth orbit (LEO) satellite is not fixed with respect to a location on the ground, some LEO networks require complicated schemes for steering radio beams to users on the ground. Since each LEO satellite is only visible for a few minutes from the user's point of view, any communication through the network that lasts more than a few minutes must be handled by more than one satellite. The complex switching that is required to "hand-off" continuous communications service from one satellite to another imposes severe processing and power burdens on the LEO satellites.

In previous satellite communication schemes, spacecraft which are not held stationary over one particular location on the Earth in geosynchronous orbits fly over large regions of the Earth very rapidly. The radio beams generated by these fast moving spacecraft sweep across vast regions of the Earth's surface at the same rate of speed. If these beams were visible to the eye, they would paint bright circular and elliptical patches of light on the ground beneath the satellite which emitted them. In a system that employs satellite-fixed cells, the "footprint" of the radio beams propagated by the spacecraft defines the zone on the ground called a "cell" which is illuminated by the spacecraft. This satellite-fixed cell moves constantly as the spacecraft orbits around the globe.

United States Patent No. 5,268,694 by Jan et al. discloses a communication system employing low Earth orbiting satellites which project footprints on the Earth by means of antennas radiating and receiving energy. Each

footprint is divided into cells. The cell shape is shown as hexagonal and described as being more circular or elliptical dependent upon the beam control. In U.S. Patent No. 5,422,647, Hirshfield et al. describe a communications satellite payload providing for communication between user devices, such as hand-held cellular telephones and terrestrial gateways. The payload supports a plurality of independent antenna beams. Jan et al. show many discrete cells of small diameter which are organized in the footprint according to the best fit. In this manner they are not aligned with the satellite's track. Hirshfield et al. show somewhat larger and more elliptical cells than Jan et al. Hirshfield cells are organized into a best-fit pattern and are not maintained in any particular reference to the changing relative velocity of the satellite over the Earth as it travels through its orbit.

In International Publication WO 93/07683, Rouffet et al. teach a system for communication with terminals via low-orbiting satellites, in which elongated elliptical beams of each coverage area are illuminated in accordance with a beam-hopping procedure. A corresponding English language version of this Patent Application may be found in Australian Patent Application AU9226029. The content of this earlier disclosure corresponds to the preamble of the independent claims.

Rouffet et al. specifically call for beams aligned with the direction of a satellites travel in orbit (direction 15) a vector in space. However, Rouffet et al. do not suggest that the antenna beams be continuously maintained aligned with a vector which is the satellite's track on the Earth's surface. The system described by Rouffet et al. is also constrained by the use of a single frequency band for communication. It is therefore necessary for the system to operate the beams alternatively to prevent interference. Rouffet et al. disclose sub-division of the beams to implement a time division multiple access technique for preventing interference between signals and for no other purpose. However, their elongated cell is not disclosed as being divided into a plurality of linear segments.

One recent attempt to overcome the problem of providing a high capacity LEO communications system which ameliorates the burdens of complex switching due to frequent hand-offs between satellites is described in U.S. Patent No. 5,408,237 entitled *Earth-Fixed Cell Beam Management for Satellite Communication System.* This Patent describes methods and apparatus which pertain to the allocation of radio beams which are generated by a constellation of satellites orbiting below geosynchronous altitude. These beams are precisely controlled so that they illuminate "Earth-fixed cells," as opposed to "satellite-fixed cells."

In sharp contrast to satellite fixed cells, an "Earth-fixed cell" is a stationary region mapped to an "Earth-fixed grid" that has permanent fixed boundaries, just like a city or a state. Although the rapidly moving satellites still shine their radio beams over the ground in rapidly moving footprints, the locations of the footprints at any given time do not determine the location of the unchanging Earth-fixed cells. The great advantage provided by using cells having boundaries that are fixed with respect to an Earth-fixed grid is realized when a subscriber being served by one satellite must switch to another beam in the same satellite or to a second satellite because the first is moving out of range below the local horizon. With satellite-fixed cells, this "hand-off" involves the assignment to the terminal of a new communication channel within the new beam or new satellite.

This assignment process takes time and consumes processing capacity at both the terminal and the satellite. It is also subject to blocking, call interruption, and call dropping if there is not an idle communication channel in the next serving beam or satellite. The Earth-fixed cell method avoids these problems by allocating communication channels (frequency, code and/or time slot) on an Earth-fixed cell basis rather than on a satellite-

fixed cell basis. Regardless of which satellite/beam is currently serving a particular cell, the terminal maintains the same channel assignment, thus substantially eliminating the "hand-off" problem.

The Earth-fixed cell method uses software that provides position and attitude information about each satellite in the constellation. Position data from this software enables each satellite to map or bound the surface into areas representing an unchanging "Earth-fixed grid." Each satellite is capable of steering, transmitting and receiving beams conveying packets of information to the Earth-fixed grid. The beams are continually adjusted to compensate the effects of satellite motion, attitude changes, and the rotation of the Earth. These goals are accomplished by partitioning satellite footprints into elongate, preferably linear, spanning cells and optionally also into multiple elongate, preferably linear, segments.

Unfortunately, many satellite communication and remote sensing systems that will be launched in the near future will rely on the more conventional method of utilizing satellite-fixed cells. Without the great benefits of an Earth-fixed cell method, a large portion of the microprocessor capabilities and power capacities of these systems will be diverted to internal switching tasks.

This problem of designing satellite systems which employ satellite-fixed cells but which avoid the deleterious effects of complex switching due to frequent hand-offs has presented a major challenge to the satellite business. The development of a high capacity satellite system which is capable of using satellite-fixed cells but which also minimizes hand-off overhead would constitute a major technological advance and would satisfy a long felt need within the communications and remote sensing industries.

DISCLOSURE OF THE INVENTION

The preferred embodiment of the *Cellular Satellite System* pertains to the management and allocation of radio beams which are generated by a satellite which moves with respect to the Earth's surface. The invention pertains to any satellite which is not in an Equatorial orbit at geosynchronous altitude. The present invention reduces hand-off overhead in systems that utilize satellite-fixed cells, augments frequency re-use, and enhances the communications and sensing capacity of the satellite.

These goals are accomplished by partitioning satellite footprints into elongate spanning cells and multiple elongate segments. The elongate spanning cells are areas that contain the satellite's track along the ground. They resemble long strips that extend along the entire footprint. Multiple elongate segments are smaller contiguous areas that lie within the elongate spanning cells. While the elongate spanning cells are generally located so that their longest axis is collinear with the apparent direction of travel of the satellite over the Earth's surface at the nadir, the longitudinal axis of the elongate spanning cells is actually slightly offset from the projection of apparent direction of travel of the satellite by a correction angle ϕ. This correction angle compensates for the changing relative motion of the Earth's surface at various latitudes.

As a result of creating elongate spanning cells and continually maintaining the cells in alignment with the satellite's track over the Earth's surface, terminals in the satellite's track remain within the spanning cells for approximately the entire time the satellite footprint passes over the terminal. This feature reduces the number of

hand-offs as the satellite-fixed cells sweep over the terminal, augments frequency re-use and enhances the communications and sensing capacity of the satellite.

An appreciation of other aims and objectives of the present invention and a more complete and comprehensive understanding of this invention may be achieved by studying the following description of a preferred embodiment and by referring to the accompanying drawings.

BRIEF DESCRIPTION OF THE DRAWINGS

Figures 1 and 2 are schematic illustrations of the Earth and of satellites operating in orbits which are not Equatorial orbits at geosynchronous altitude.

Figure 3 reveals satellites in Earth orbit and the footprints they produce on the Earth's surface.

Figure 4 is a schematic diagram that shows a single footprint and a single elongate spanning cell. The alignment of the elongate spanning cell has been corrected by an angle ϕ which compensates for the changing relative motion of the Earth's surface at various latitudes.

Figure 5 is a schematic diagram that reveals a single footprint and several elongate spanning cells.

Figure 6 presents another schematic diagram showing a single footprint, several elongate spanning cells and a number of multiple elongate segments within each elongate spanning cell.

Figures 7, 8 and 9 supply graphs which illustrate the functional relationships of the correction angle versus argument of perigee for a near-polar orbit, surface velocity versus latitude and latitude of nadir versus argument of perigee for an inclined orbit.

Figure 10 is a schematic illustration of a satellite in Earth orbit. This figure also portrays the satellite's track on the Earth, which resembles a spiral.

Figure 11 is a perspective view of a satellite which is designed for use with the preferred embodiment of the invention.

Figures 12, 13, 14, 15 and 16 are schematic block diagrams of components aboard the satellite shown in Figure 11 which are employed to practice the present invention.

BEST MODE FOR CARRYING OUT THE INVENTION

Satellites & Geometry

Figures 1 and 2 show a constellation 10 of satellites 12 circling the Earth E as they travel along polar, equatorial, or inclined orbits 11. Figures 1 and 2 also depict the Equator and several Great Circles. The present invention may be practiced using only one or many satellites 12. The present invention pertains only to satellites that use satellite-fixed cells, *i.e.*, satellites that are constantly in motion with respect to the Earth. As a consequence, the orbits 11 shown in Figures 1 and 2 may be any orbit which is not an Equatorial orbit or an orbit at geosynchronous altitude. When used in this Specification and the Claims that follow, the term "orbit" refers to any trajectory of movement above the atmosphere of a celestial body, including circular and elliptical trajectories.

Figure 3 exhibits three satellites 12 moving along an orbital pathway 11 above the Earth E in a direction of travel T. When the line defining the direction of travel T in orbit is projected down onto the Earth's surface, which is rotating west to east, a continuous line is formed on the surface at the satellite's nadir N. This line is called the satellite's track T'.

Each satellite 12 includes a radiation interface 14 which is capable of transmitting and/or receiving radiated energy 15a, 15b and 15c. The term "radiated energy" pertains to any form of energy, including a signal, which is transported from one position to another. Radiated energy includes all forms of waves and particles irrespective of wavelength, including electromagnetic and optical radiation.

If the satellite 12 is a communications satellite, the radiation interface 14 comprises transmit and receive antennas. If the satellite employed to practice the present invention performs remote sensing tasks, the radiation interface 14 comprises sensors or detectors. The spacecraft may also be used to direct some beneficial transmission toward the Earth E. Examples of such transmissions may include messages from a store-and-forward telecommunication system, compressed musical works for transfer to compact disks or illuminating radiation for a resource-mapping radar.

In one of the embodiments of the invention, the satellites 12 communicate with personal, mobile and fixed terminals P, M, F and gateways G on or near the surface. The word "terminal" is intended to encompass any device capable of sending or receiving radiated energy. Terminals include gateways. While most terminals are located on the Earth, they may be near the Earth, *e.g.*, they may reside on an aircraft.

The area on the surface of the Earth that is illuminated by the radiated energy 15 emitted by a communications satellite 12 is known as the satellite's footprint 16. In the case of a remote sensing satellite, the interface 14 collects some form of radiation from an elliptical region on the surface of the Earth known as a "reception zone." A reception zone 17 defines the area at a given time which is "viewed" by a sensor aboard a satellite 12. A reception zone is substantially the same as a footprint 16, but a footprint 16 is defined by radiated energy 15 directed toward and impinging upon the Earth, while a reception zone 17 is defined by a surface on the Earth from which energy is radiated that may also be detected by a satellite at a particular instant. The footprint and reception zone boundaries are set by the radiation pattern of the radiation interface 14. The boundaries are selected by a selected roll-off of signal from a maximum value at or near the center of the footprint 16 or zone 17.

The three elliptical regions depicted in Figure 3 may be either footprints 16a, 16b and 16c or reception zones 17a, 17b and 17c.

Figure 4 exhibits a single footprint 16 containing a single elongate spanning cell 18. In accordance with the present invention, the spatial points in each footprint 16 or reception zone 17 are mapped into long strips referred to as linear spanning cells 18 by electronic transformation of the spatial points by the radiation interface. The elongate spanning cells extend across along an entire footprint 16 or reception zone 17. Each cell 18 has two parallel sides along its longest dimension and a longitudinal axis 20 halfway between its two longest sides and parallel to them. The two relatively short sides of the cell 18 are collinear with an ellipse, because the boundary of the footprint 16 or the reception zone 17 which each cell 18 spans is always an ellipse itself. The edges of the elongate spanning cells are shaped by beam shaping and steering electronics aboard the satellite 12.

A footprint 16 and any elongate spanning cells 18 within it are constantly moving across the Earth's surface as the satellite 12 which creates the footprint 16 flies across the sky overhead. The instantaneous position of an elongate spanning cell 18 relative to its footprint 16 is determined by the track T′ of the satellite 12 over the ground and by a correction angle ϕ. The correction angle is chosen to align the satellite radiation interface 14 longitudinal axis 20 with the satellite's motion over the Earth's surface. If the Earth were not turning, no correction would be needed.

Figure 4 shows the instantaneous positions of both an uncorrected and a corrected elongate spanning cell extending along a footprint 16. The uncorrected elongate spanning cell 18 is lightly shaded, and is centered along the projected line of the satellite's direction in orbit marked by reference character T. The elongate spanning cell which has been aligned by altering its position by correction angle ϕ is heavily shaded, and is centered along the line T', marked by reference character 24. The correction angle ϕ is measured at the intersection I of the satellite's track T' and the line T, the projection of the satellite's direction in orbit. For the sake of clarity, the magnitude of the correction angle ϕ has been exaggerated in Figure 4.

Figure 5 portrays a footprint 16 containing a number of linear spanning cells 18, while Figure 6 portrays both linear spanning cells 18 and multiple linear segments 22 within a footprint 16 (or reception zone 17). The multiple linear segments 22 are provided by dividing the cell 16 with additional shaped and steered beams 15. Multiple linear segments 22 add additional "space division multiple access" to the communication system. This provides more reuse of allocated frequencies, hence a larger number of users can be accommodated simultaneously.

Calculating the Correction Angle ϕ

The following discussion concerns the derivation of the appropriate correction angle ϕ based on the satellite's latitude. The derivation applies to the special case of a near-polar orbit.

If the longitudinal axis of the cell is parallel to the orbital plane of the satellite (which is fixed in space, and does not rotate with the Earth), and the Earth is turning under the satellite 12 as it proceeds in its orbit 11, from the point of view of an observer on Earth the satellite's track T' is not parallel to the lines of longitude, but lies at a small angle to them. This small angle, called the "correction angle" and represented by the variable ϕ, varies from about four degrees at the Equator to zero at the poles. A graph 200 of the correction angle ϕ 202

versus latitude 206 is presented in Figure 7. The angle ϕ reverses when the satellite 12 passes over a pole. As a result of Earth's rotation, the terminal appears to move across the cell. If the linear spanning cells 18 are one degree of latitude (about 115 km) wide, and the satellite is in a near-polar orbit with an altitude of about 700 km, the terminal will seem to move about 3/4 of the way across the cell 18 in the cell's three minute dwell time at the Equator, decreasing toward the poles. The dwell time is the period of time the satellite footprint spends on a given point on the Earth's surface.

This phenomenon will increase handoff activity, since about half of the terminals will have to change cells from this cause in their three minute dwell time. As described above, this problem can be substantially eliminated by swinging the cell pattern a few degrees in each direction during the satellite's orbit. This compensation may be accomplished using a slow mechanical movement of the antenna or an electrical means, depending on the antenna design, and is described in complete detail below.

In the equations that follow, the frame of reference is the "fixed stars", *i.e.*, a reference frame based on inertial space. The Earth is turning on its axis and satellites are moving in their orbits with respect to this frame of reference. Since the orbits of satellites of Earth move through space with the Earth's center of mass, we have assumed for convenience that the frame of reference moves with the Earth in its orbit.

The surface of the Earth E as seen from this frame of reference moves from West to East. The velocity is highest at the Equator, and decreases in proportion to the cosine of the latitude to zero at the poles. Because one nautical mile (about 6076.1 feet) is defined as one minute of longitude at the Equator, it is very convenient in the following analysis to work in nautical miles and in nautical miles per hour (knots).

The surface velocity of the Earth at a latitude L, $V_s(L)$, in knots, as seen by a distant observer in the reference frame is always from West to East, and is given by Equation One:

$$V_s(L)=\frac{360x60}{24}\cos(L) \qquad \textit{(Equation One)}$$

Where L is the latitude in degrees of the point on the Earth's surface at which the velocity is being measured.

A graph 214 of the Earth's surface velocity 216 as a function of North or South latitude 218 as shown in Figure 8.

In the simple case of a circular polar orbit, an orbit of constant altitude which passes over both the North Pole and the South Pole, the motion of the satellite is always at right angles to the motion of the Earth's surface, and, assuming a spherical Earth, the orbital period is the time it takes for the satellite to travel completely around the Earth, may be found using Equation Two:

$$\tau = \frac{2\pi}{60}\sqrt{\frac{(r_e + h)^3}{GM}} \qquad \textit{(Equation Two)}$$

Where τ is the period of orbit;

r_e is the radius of the Earth, *i.e.*, 6378.165 km;

h is the orbital altitude in km; and

GM is the Earth's mass times the gravitational constant, $G=Km^3s^{-2}$; GM=398,603.2.

For a satellite 12 in low Earth orbit at 700 km, τ=98.773 minutes. (This is the orbital period, *i.e.*, the times it takes for the satellite to travel completely around the Earth.)

The orbital velocity of a satellite in a circular orbit is given by Equation Three:

$$V_o = 360\frac{60x60}{\tau} \qquad \textit{(Equation Three)}$$

For a satellite in a 700 km orbit, the orbital velocity is then $V_o=1.312x10^4$ knots.

The motion of the satellite's nadir across the surface of the Earth is the vector sum of the satellite's velocity and the Earth's surface velocity. At any given latitude, the angle at which the Earth's surface is moving with respect to the direction of the satellite's motion in the inertial reference frame is the angle portion of that vector sum. If the satellite 12 is moving Northward in its orbit, and the orbit is at a small angle to the Earth's axis, the Earth's surface will move from left to right below the satellite, and to fit that motion, the satellite's radiation pattern must be aligned in a Northwest-Southeast direction. As the satellite approaches the North Pole, the necessary angle of the correction decreases, and is zero when directly over the North Pole NP. As the satellite proceeds Southward, the correction angle must swing to the satellite's right, to a Southwest-Northeast alignment, since West is now on the satellite's right. The correction angle reaches a maximum as the satellite crosses the Equator. The angle then decreases to zero as the satellite crosses the South Pole SP, reversing to a Northwest-Southeast alignment after the South Pole SP is crossed.

The discussion presented below utilizes the navigator's convention that True North is zero degrees, with the direction angle increasing as direction changes toward the East. In other words, the angle of direction changes from zero degrees through 360 degrees as the compass needle moves clockwise from the starting point of True North.

The correction angle, $\phi(L)$, which is the angle of the motion of the Earth's surface with respect to the satellite at latitude L, may be determined using Equation Four:

$$\phi(L)=90-i-\arctan\frac{V_s L(\omega)}{V_o} \qquad \textit{(Equation Four)}$$

Where V_o is the orbital velocity of the satellite;

i is the orbital inclination, *i.e.*, the angle measured between the plane containing the satellite's orbit and the plane containing the Earth's Equator;

ω is the argument of perigee, *i.e.*, the satellite's orbital position as given by the number of degrees of a 360-degree orbit it has traveled since crossing the Equator in a Northbound direction; and

$L(\omega)$ is the latitude of the satellite at argument of perigee ω. $L(\omega)$ is equal to ω for satellites in polar orbits, for a value of ω of ninety degrees or less.

The graph 200 presented in Figure 7 was generated using a value of i of ninety degrees, which corresponds to a "pure" polar orbit. In the case of a polar orbit, the latitude of the satellite's nadir is the same as its orbital position. Consequently, for the special case of a satellite in polar orbit, $L(\omega)=\omega$ from the Equator to the North Pole.

For this polar orbit, the correction angle varies as the satellite 12 makes one complete orbit as shown in Figure 7. This figure presents data for a Northbound satellite in a circular polar orbit starting at the Equator (latitude= 0 degrees, ω= 0 degrees), proceeding Northward to the North Pole (latitude= 90 degrees, ω= 90 degrees), then Southward to the Equator (latitude again 0 degrees, ω= 180 degrees), continuing Southward to the South Pole (latitude= -90 degrees, ω= 270 degrees), and finally Northward again to the Equator (latitude= 0 degrees, ω= 0 degrees). Negative angles indicate motion to the left of the satellite as it proceeds in its orbit, while positive angles indicate motion to the right.

For a satellite in an inclined orbit, the satellite's nadir never reaches the pole, so that the maximum latitude is less than ninety degrees. The latitude of the nadir can be found at any moment from Equation Five:

$$\sin(L)=\sin(i)*\sin(f+\omega) \qquad \textit{(Equation Five)}$$

where L is the latitude of the nadir;

i is the inclination of the orbit;

f is a very small anomaly which may be ignored for the purposes of this calculation; and

ω is the argument of perigee of the satellite.

The graph 208 depicted in Figure 9 is based on Equation Five and plots the latitude of nadir 210 versus the argument of perigee 212 for a satellite in an inclined orbit.

Using the Correction Angle ϕ to Point the Satellite Antenna:

A Preferred Method Employing a GPS Receiver

Once the correction angle ϕ has been determined, the correct angle of the radiation interface 14, which may be an antenna 34, with respect to the body of the satellite 12 must be ascertained. Other information that is required includes the relative speed and direction of the satellite, and the direction of the Earth's surface at the nadir.

The preferred method of acquiring the needed information employs a navigation receiver on the satellite 12 which receives and interprets the signals of the Global Positioning System (GPS). Such receivers are readily available from a number of manufacturers. Thousands of personal versions of GPS receivers are produced each month by companies such as Magellan™ and Garmin™. Space-qualified versions are produced by companies such as Interstate Electronics™, Motorola™ and Rockwell International™. These receivers provide continuous information on their position with respect to the Earth's surface, already corrected for the Earth's motion, and all such receivers either provide, or can readily be adapted to provide, an output signal which gives a continuous value of the receiver's speed and direction with respect to the Earth's surface. The satellite 12 which is used to implement the present invention will include attitude sensing and stabilization mechanisms that supply an output signal which give a continuous value of the receiver's speed and direction with respect to the Earth's surface. Other systems on board the satellite 12 will contain attitude sensing and stabilization mechanisms which furnish an output signal proportional to the orientation of the satellite's structure with respect to its direction of motion. These two signals can be added or subtracted to give a signal directly proportional to the relative angle of the satellite's body to the satellite's direction of motion over the Earth's surface T'. The antenna can then easily be rotated by a conventional servo-mechanism to place its long axis in line with that direction of motion.

Figure 10 is a schematic depiction of a satellite 12 in a ten day polar orbit. The track of the satellite on the ground appears as a spiral T'.

Figure 11 reveals one of many satellite designs that may be utilized to realize the benefits of the present invention. The satellite 12 comprises a body 30, a solar array 32 and an antenna 34 which includes a narrow reflector with a parabolic cross-section. The internal components of the satellite 12 include an inertia wheel 36, an antenna positioning servo 38 and a radio-frequency feed to antenna 39.

Figures 12 and 13 are schematic block diagrams 39 and 45 depicting generalized groups of electronic circuits aboard the satellite 12. Figure 12 shows a GPS receiver 100 which produces an output that includes an altitude and latitude signal 40. This signal is fed to a converter 42 which, in turn, produces a control signal 44 that governs the action of an antenna positioning servo 38. The GPS receiver 100 is described in great detail in the text which follows and in Figure 16.

Figure 13 shows an alternative circuit that includes a radio receiver 46 which produces a synchronizing pulse 48 that is fed to timers 50. The timers 50 generate an elapsed time code 52 which is supplied to a converter 54. The converter emits a control signal 56 which directs the action of an antenna positioning servo 38.

Figure 14 is a schematic block diagram 57 that portrays the GPS receiver 100 and accompanying electronic components in greater detail. The GPS receiver 100 generates two digital signals. The first signal comprises a number which is the speed of the satellite over the Earth's surface, and an angle which is the angle between the satellite's velocity and the underlying meridian of longitude. These quantities are components of the satellite's velocity vector, represented as box 62 in Figure 14. The second digital signal is the latitude of the satellite's nadir, shown as box 64 in Figure 14.

A microprocessor 66 receives these two signals 62 and 64 from receiver 100, in addition to the angle of the satellite's longitudinal axis with respect to the Earth's axis 60 which is supplied by an attitude sensor 58. The microprocessor 66 multiplies the vector constant equal to the surface velocity of the Earth's Equator by the cosine of the latitude. This product yields the vector of the surface velocity at the satellite's nadir, V_n. The microprocessor 66 also calculates the resultant of the satellite velocity vector and the surface vector V_n. The angle portion of this resultant, corrected by the angle of the satellite's longitudinal axis with the Earth's axis, is the beam offset angle 68. This beam offset angle 68 is fed to a servo-mechanism 38, which rotates the antenna array 34 so that its long dimension makes the beam offset angle 68 with the direction of the satellite's motion.

Figure 15 offers another schematic block diagram 71 that is specifically designed for use with satellites 12 that travel in circular orbits at a constant altitude. A radio receiver 46, a star tracker 72 or a GPS receiver 100 may be utilized to generate an Equator-crossing pulse 74 which resets a timer 76. The timer 76 sends a "time since crossing" (τ_c) signal 78 to a function generator 80. The τ_c signal 78 is proportional to the time that has elapsed since the satellite 12 crossed the Equator. The function generator 80 includes a memory which stores a quantity $\tau_{½}$, which is the time it takes the satellite to complete one half of its orbit around the globe, and also stores the satellite's velocity vector. The function generator output is equal to the angle of the satellite's apparent motion over the Earth's surface, taking into account the surface velocity of the Earth at the satellite's nadir. The surface velocity, V', is the velocity at the Equator, V, in Equation Six:

$$V' = V\cos L \qquad \textit{(Equation Six)}$$

where L is the latitude at the satellite's nadir.

The latitude in this case can be set equal to:

$$180\frac{\tau_c}{\tau_{½}}\phi \qquad \textit{(Equation Seven)}$$

since the cosine function interprets angles over ninety degrees. An adder 84 algebraically sums the correction angle from the function generator's output with the actual offset of the satellite's longitudinal axis with respect to

the Earth's axis 82 and its direction of motion with respect to the Earth's axis. The result is the beam offset angle 86, which is used to a control servo-mechanism 38 that points the satellite antenna 34.

Figure 16 is a schematic block diagram 100 of the internal components and functions of a GPS receiver. In general, the GPS receiver is a superheterodyne with a voltage-controlled local oscillator. The existing constellation of GPS satellites use a code-division modulation scheme (like CDMA), which allows all of the GPS satellites to use the same bandwidth segment. Signals from different GPS satellites are detected by matching them with a code that is peculiar to each satellite. This function is performed by an active detector 112, which receives an input from an antenna 102 through a low-noise amplifier 104, a mixer 106, a band-pass filter 108 and an intermediate frequency amplifier 110.

A satellite selector 118 uses an algorithm to pick a set of GPS satellites, usually four, which are in view and whose positions are widely-enough spaced to provide a good navigation solution. The satellites chosen by the selector 118 are indicated by arrow 120 in Figure 16. The satellite selector 118 bases its selection on satellite position information from the almanac memory 132 and a present-time signal 126 from the local clock 124. The local clock 124 is connected to a temperature-compensated crystal oscillator ("TXCO") 125. All the internal timing signals used in the GPS satellite are derived from the TXCO 125. The selector 118 then passes the satellite's identity to the code generator 122, which generates the appropriate code for the desired satellite. This code is shifted in phase with respect to the local clock 124 until it matches the received signal code as determined by the active detector 112. This condition is maintained by a code tracking control loop 123.

Since the GPS satellites are moving rapidly, the satellite selector 118 also calculates the frequency offset 116 of each satellite due to Doppler shift, and adjusts a local oscillator 114 to place the satellite's signal in the receiver's passband.

The detected signal from the satellite is a bitstream which contains a fragment of the almanac 132, the satellite's ephemerides 134, a health bit 128 and another administrative information, and very precise time marks. This bitstream is separated into its components by a signal decoder 130.

A GPS satellite orbit calculator 136 uses the almanac 132 and ephemeride 134 information and Kepler's equations to calculate the position 138 of each chosen GPS satellite in its orbit with a precision of a few meters. This information is transmitted to the satellite selector 118 and to the navigation microprocessor 140.

The navigation microprocessor 140 receives a timing signal from the local clock 124 and a timing signal from each satellite for each chosen satellite. Since the speed of radio signals is a known constant, the navigation computer 140 can calculate the distance to each chosen satellite. Because the local clock 124 is not highly accurate, these ranges are in error, and are called "pseudo-ranges." These pseudo-ranges are measured utilizing the code phase shift 127 provided by the code generator 122 over loop 123.

If four satellites were chosen by the selector 118, the navigation computer 140 has four pseudo-ranges. If, however, the ranges were accurate, three would be sufficient to find an exact position. To find an exact solution, the computer solves a system of four equations in four unknowns: latitude 142, longitude 146, altitude 144 and the local clock error. The result is a position 142, 144 & 146 and precise time 148 output. The algorithms used in these calculations make allowance for the Earth's rotation, so that the position found is a point on the Earth's surface.

In a commercial GPS receiver, positions are generated frequently, usually at intervals of a second or less. The receiver utilizes the most recent two or three positions and their associated times to calculate speed and direction of motion with respect to the Earth's surface. This task is accomplished in the speed and course computer 150.

The speed and course output 152 can be combined with knowledge of the orientation of the body of the satellite to its direction of motion, which is derived from an attitude computer 154, to determine the appropriate pointing angle 156 of the antenna 34.

Alternatively, two GPS receivers 100 and 158 can be employed, separated by several feet on the satellite's structure. The satellite's attitude and any rotation of its structure can be then be determined by comparing the positions of the two receivers 100 and 158.

Alternative Methods of Pointing the Satellite Antenna

In an alternative embodiment of the invention, the satellite 12 is furnished with information describing its velocity with respect to the Earth's surface from an Earth-based radar system. This information can be combined with information from the satellite's attitude-sensing equipment to generate an antenna pointing signal.

Another alternative utilizes circuits aboard the satellite 12 that generate a continuous relative-velocity signal. An on-board computer is used to continuously solve Kepler's equations for the satellite's orbit and adds the Earth's motion, derived from the latitude of the nadir as calculated above. The computer is updated periodically by an Earth-based signal which provides the ephemerides of the satellite's orbit from radar or visual observations.

Yet another alternative incorporates a method that is useful for a satellite in a stabilized circular orbit. A device onboard the satellite is programmed with the equation of its fixed orbit. The output signal of the device is the relative velocity and angle of the satellite's course over the Earth's surface. The device receives synchronizing pulses periodically (as a practical matter, as infrequently as monthly for some orbits) from radar or visual sightings. The resulting information, which for such an orbit repeats itself each orbit and which in principle can be generated by a mechanism as simple as a cam, can be used to point the satellite antenna.

Comparison with Prior Inventions

The dwell time of a terminal in an elongate spanning cell is on the order of two to eight times longer for the present invention than the time a terminal would reside in a cell of Jan et al. as shown in U.S. Patent No. 5,268,694. This comparison was calculated with reference to Jan's description in Column 3, Lines 55-60 and to Figure 2 for a footprint diameter = 4,075 km, a satellite velocity = 25,000 km/hr, approximately eight Jan cells along the footprint diameter, and a cell diameter of approximately 4,075/8 = 500 km. The time of dwell of a Jan et al. cell on a terminal is 500 x 60/25,000 = 1.2 minutes. Using the same orbital parameters, the time of dwell of cell of the present invention on a terminal is 4,075 x 60/25,000 = 10 minutes. The cells of the present invention when divided into four elongate segments, have a dwell time of 10/4 = 2.5 minutes. A comparison of time of dwell with the cell of the present invention and Rouffet is not meaningful, since Rouffet's beams are made to hop around within the footprint to prevent interference between user terminals operating on the same frequency.

CONCLUSION

Although the present invention has been described in detail with reference to particular preferred and alternative embodiments, persons possessing ordinary skill in the art to which this invention pertains will appreciate that various modifications and enhancements may be made without departing from the spirit and scope of the Claims that follow. The various orbital parameters and satellite designs that have been disclosed above are intended to educate the reader about particular embodiments, and are not intended to constrain the limits of the invention or the scope of the claims. The *List of Reference Characters* which follows is intended to provide the reader with a convenient means of identifying elements of the invention in the Specification and Drawings. This list is not intended to delineate or narrow the scope of the Claims.

INDUSTRIAL APPLICABILITY

The *Cellular Satellite System* described above will enhance the ability of satellite communication systems, particularly those availing satellite fixed cell techniques, to carry higher message traffic volumes from a greater number of users. It can be seen that by pointing the satellite radiation interface 14 to maintain the elongate spanning cells 18 in alignment with the satellite's track T' over the Earth's surface, a terminal P,M,G in the satellite's track T' remains (dwells) within an elongate spanning cell 18 for approximately the entire time the satellite footprint 16 passes over the terminal P,M,G. The dwell time of a terminal P,M,G within the track-aligned, elongate spanning cell 18 is many times longer than the dwell time of a terminal P,M,G in a hexagonal, circular or elliptical shaped satellite-fixed cell created by known satellites in comparable orbits. Even when the elongate spanning cell 18 is subdivided into multiple linear segments 22, a terminal P,M,G dwells for more than two times longer than in a satellite-fixed cell created by known satellites in comparable orbits. This feature saves time to access a satellite by reducing the number of hand-offs as the satellite-fixed cells 16 sweep over a terminal P,M,G. Saving time augments frequency re-use, and thereby enhances the communications and sensing capacity of the satellite 12 resulting in economic benefit to the users and proprietors of the system.

LIST OF REFERENCE CHARACTERS

10	Constellation
11	Orbit
12	Satellite
14	Radiation interface
15a, 15b, 15c	Radiated energy
16a, 16b, 16c	Footprint formed on Earth
17a, 17b, 17c	Reception zone
18	Elongate spanning cells
20	Longitudinal axis of elongate spanning cell
22	Multiple elongate segments
24	Corrected position of longitudinal axis
30	Satellite body
32	Solar array
34	Parabolic reflector
36	Inertia wheel
38	Antenna positioning servo
39	Radio-frequency feed to antenna
40	Altitude and latitude signal
42	Converter
44	Control signal
46	Radio receiver
48	Synchronizing pulse
50	Timers
52	Elapsed time code
54	Converter
56	Control signal
58	Attitude sensor
60	Angle of satellite longitudinal axis with Earth's axis
62	Satellite velocity vector
64	Latitude
66	Microprocessor
68	Beam offset angle
72	Star tracker
74	Equator-crossing pulse
76	Timer

78	Time since crossing
80	Function generator
82	Angle of satellite longitudinal axis with Earth's axis
84	Adder
86	Beam offset angle
100	Global Positioning Satellite receiver
102	Receiver antenna
104	Low noise amplifier
106	Mixer
108	Bandpass filter
110	Intermediate frequency amplifier
112	Active detector
114	Local oscillator
116	Doppler offset
118	Satellite selector
120	Chosen satellite number
122	Code generator
123	Code tracking control loop
124	Local clock
125	Temperature-compensated crystal oscillator
126	Time signal
127	Code phase shift
128	Health information
130	Signal decoder
132	Almanac memory
134	Ephemeride memory
136	GPS satellite orbit calculator
138	Positions of all GPS satellites
140	Navigation microprocessor
142	Latitude
144	Altitude
146	Longitude
148	Precise time
150	Speed and course computer
152	Speed and course
154	Attitude computer
156	Antenna angle

158	Second receiver
200	Graph of correction angle versus latitude
202	Correction angle
204	Argument of perigee
206	Latitude
108	Graph of latitude of nadir versus argument of perigee
210	Latitude of nadir
212	Argument of perigee
214	Graph of surface velocity of Earth versus North or South latitude
216	Surface velocity of the Earth
218	North or South latitude
E	Earth
F	Fixed terminal
G	Gateway
GC	Great circle
M	Mobile terminal
N	Nadir
NP	North Pole
P	Portable terminal
SP	South Pole
T	Direction of travel of satellite
T'	Track of satellite on ground
ϕ	Compensation angle

CLAIMS

What is claimed is:

1. A method for controlling at least the transmission of a beam of radiated energy (15a, 15b, 15c) to a terminal (P,M,F,G) from a position above the Earth (E) comprising the steps of:

operating a satellite (12) in an Earth orbit (11);

said satellite (12) flying in a direction (T) having a track (T') with respect to a point on the Earth's surface while flying in a direction (T) at an altitude above the Earth (E) which is not an Equatorial geosynchronous altitude;

said satellite (12) having a radiation interface (14);

said radiation interface (14) being capable of transmitting said beam of radiated energy (15a, 15b, 15c) to said terminal (P,M,F,G);

forming a footprint (16a, 16b, 16c) using said radiation interface (14) which is capable of transmitting said beam of radiated energy (15a, 15b, 15c) to said terminal (P,M,F,G);

partitioning said footprint (16a, 16b, 16c) into at least one elongate spanning cell (18);

said elongate spanning cell (18) extending along entire said footprint (16a, 16b, 16c); and having a longitudinal axis (20); and

directing said beam of radiated energy (15a, 15b, 15c) to said elongate spanning cell (18) in said footprint (16a, 16b, 16c);

characterised in that the method comprises aligning said longitudinal axis (20) of said elongate spanning cell (18) continually generally parallel to said track (T') of said satellite (12) on the Earth's surface.

2. A method for controlling at least the reception of radiated energy (15a, 15b, 15c) at a position above the Earth (E) comprising the steps of:

operating a satellite (12) in an Earth orbit (11);

said satellite (12) having a track (T') with respect to a point on the Earth's surface while flying in a direction (T) at an altitude above the Earth (E) which is not an Equatorial geosynchronous altitude;

said satellite (12) having a radiation interface (14);

said radiation interface (14) being capable of receiving radiated energy (15a, 15b, 15c);

mapping a reception zone (17a, 17b, 17c) on the Earth's surface using said radiation interface (14);

said reception zone (17a, 17b, 17c) containing all positions from which radiated energy (15a, 15b, 15c) may be received by said radiation interface (14) aboard said satellite (12) at a particular instant of time;

partitioning said reception zone (17a, 17b, 17c) into at least one elongate spanning cell (18);

said elongate spanning cell (18) extending along entire said reception zone (17) and having a longitudinal axis (20); and

directing said beam of radiated energy (15a, 15b, 15c) to said elongate spanning cell (18) in said reception zone (17a, 17b, 17c);

characterised in that the method comprises aligning said longitudinal axis (20) of said elongate spanning cell (18) continually generally parallel to said track (T') of said satellite (12).

3. A method in accordance with claim 1 or 2, wherein each elongate spanning cell (18) has two long sides substantially parallel to said longitudinal axis (20) whereby to constitute a linear spanning cell.

4. A method in accordance with any preceding claim, further comprising the step of:

dividing said spanning cell (18) into multiple segments (22) mutually located along the direction of said longitudinal axis (20); and

directing said beam of radiated energy (15a, 15b, 15c) to each of said multiple segments (22) in said spanning cell (18).

5. A method in accordance with any preceding claim, in which the step of continually aligning said longitudinal axis (20) of said spanning cell (18) includes:

correcting the alignment of said spanning cell (18) by shifting the position of said longitudinal axis (20) to a corrected position (24) by an angle having a value ϕ:

said value ϕ being measured between the projection of the track (T') of said satellite (12) on the Earth's surface and a Great Circle (GC) on the Earth's surface;

said Great Circle (GC) containing a projection of the direction (T) of the satellite orbit (11) and the nadir (N) of the position of said satellite (12);

such that the alignment of said spanning cell (18) is compensated for the changing relative motion of the Earth's surface at various latitudes.

6. A method in accordance with claim 1 or 2, further comprising the step of:

configuring the position of said radiation interface (14) to be continually generally aligned parallel to the relative motion of the Earth's surface, the track (T') of said radiation interface (14) over the surface of the Earth being generally a spiral.

7. A system for controlling at least the transmission of a beam of radiated energy (15a, 15b, 15c) from a satellite to a terminal (P,M,F,G) from a position above the Earth (E) comprising:

a satellite (12) in an Earth orbit (11);

said satellite (12) flying in a direction (T) having a track (T') with respect to a point on the Earth's surface while flying in a direction (T) at an altitude above the Earth (E) which is not an Equatorial geosynchronous altitude;

said satellite (12) having a radiation interface (14);

said radiation interface (14) being capable of transmitting said beam of radiated energy (15a, 15b, 15c) to said terminal (P, M, F, G); said radiation interface (14) having a footprint (16a, 16b, 16c) on the Earth's surface;

said terminal (P, M, F, G) lying within said footprint (16a, 16b,16c);

said satellite (12) also having beam control means for partitioning said footprint (16a, 16b, 16c) into at least one elongate spanning cell (18);

said elongate spanning cell (18) extending along entire said footprint (16a, 16b, 16c) and having a longitudinal axis (20);

means for directing said beam of radiated energy (15a, 15b, 15c) to said elongate spanning cell (18) in said footprint (16a, 16b, 16c); and

characterised in that the system comprises means for aligning said longitudinal axis (20) of said elongate spanning cell (18) continually generally parallel to said track (T') of said satellite (12) on the Earth's surface.

8. A system according to claim 7, wherein said beam control means operates such that each elongate spanning cell (18) has two long sides substantially parallel to said longitudinal axis (20) whereby to constitute a linear spanning cell.

9. The satellite system in accordance with claim 7 or 8, comprising means for further dividing said elongate spanning cell (18) into multiple segments (22) mutually located along the direction of said longitudinal axis (20);

and means for directing said beam of radiated energy (15a, 15b, 15c) to said terminals (P, M, F, G) within each of said multiple segments (22) in said spanning cell (18).

10. The satellite system in accordance with any of claims 7 to 9, in which:

said means for aligning operates by shifting the position of said longitudinal axis (20) to a corrected position (24) by an angle having a value ϕ;

said value ϕ being measured between the projection of the track (T') of said satellite (12) on the Earth's surface and a Great Circle (GC) on the Earth's surface;

said Great Circle (GC) containing a projection of the direction (T) of the satellite orbit (11) and the nadir (N) of the position of said satellite (12);

such that the alignment of said spanning cell (18) is compensated for the changing relative motion of the Earth's surface at various latitudes.

11. The satellite system in accordance with claim 10, in which the angle ϕ is the angle of which the value is 90 degrees minus orbital inclination angle (i) minus arctangent surface velocity (V_s) at a given latitude ($L(\omega)$) divided by orbital velocity (V_o).

12. The satellite system in accordance with claim 7, in which means are provided for continually generally aligning the position of said radiation interface (14) parallel to the relative motion of the Earth's surface, the track (T') of said radiation interface (14) on the surface of the Earth generally forming a spiral thereon.

13. A system for controlling at least the reception of a beam of radiated energy (15a, 15b, 15c) to a satellite from a terminal (P,M,F,G) from a position above the Earth (E) comprising:

a satellite (12) in an Earth orbit (11);

said satellite (12) flying in a direction (T) having a track (T') with respect to a point on the Earth's surface while flying in a direction (T) at an altitude above the Earth (E) which is not an Equatorial geosynchronous altitude;

said satellite (12) having a radiation interface (14);

said radiation interface (14) being capable of receiving said beam of radiated energy (15a, 15b, 15c) from said terminal (P,M F,G); said radiation interface (14) having a footprint (16a, 16b, 16c) on the Earth's surface;

said terminal (P,M,F,G) lying within said footprint (16a, 16b,16c);

said satellite (12) also having beam control means for partitioning said footprint (16a, 16b, 16c) into at least one elongate spanning cell (18);

said elongate spanning cell (18) extending along entire said footprint (16a, 16b, 16c) and having a longitudinal axis (20);

means for pointing toward said beam of radiated energy (15a, 15b, 15c) received from said terminal (P,M,F,G) in said elongate spanning cell (18) in said footprint (16a, 16b, 16c); and

characterised in that the system comprises means for aligning said longitudinal axis (20) of said elongate spanning cell (18) continually generally parallel to said track (T') of said satellite (12) on the Earth's surface.

14. A system according to claim 13, wherein said beam control means operates such that each elongate spanning cell (18) has two long sides substantially parallel to said longitudinal axis (20) whereby to constitute a linear spanning cell.

15. The satellite system in accordance with claim 13 or 14, comprising means for further dividing said elongate spanning cell (18) into multiple segments (22) mutually located along the direction of said longitudinal axis (20);

and means for pointing toward said beam of radiated energy (15a, 15b, 15c) received from said terminals (P,M,F,G) within each of said multiple segments (22) in said spanning cell (18).

16. The satellite system in accordance with any of claims 13 to 15, in which:

said means for aligning operates by shifting the position of said longitudinal axis (20) to a corrected position (24) by an angle having a value ϕ;

said value ϕ being measured between the projection of the track (T') of said satellite (12) on the Earth's surface and a Great Circle (GC) on the Earth's surface;

said Great Circle (GC) containing a projection of the direction (T) of the satellite orbit (11) and the nadir (N) of the position of said satellite (12);

such that the alignment of said spanning cell (18) is compensated for the changing relative motion of the Earth's surface at various latitudes.

17. The satellite system in accordance with claim 16, in which the angle ϕ is the angle of which the value is 90 degrees minus orbital inclination angle (i) minus arctangent surface velocity (V_s) at a given latitude ($L(\omega)$) divided by orbital velocity (V_o).

18. The satellite system in accordance with claim 13, in which means are provided for continually generally aligning the position of said radiation interface (14) parallel to the relative motion of the Earth's surface, the track (T') of said radiation interface (14) on the surface of the Earth generally forming a spiral thereon.

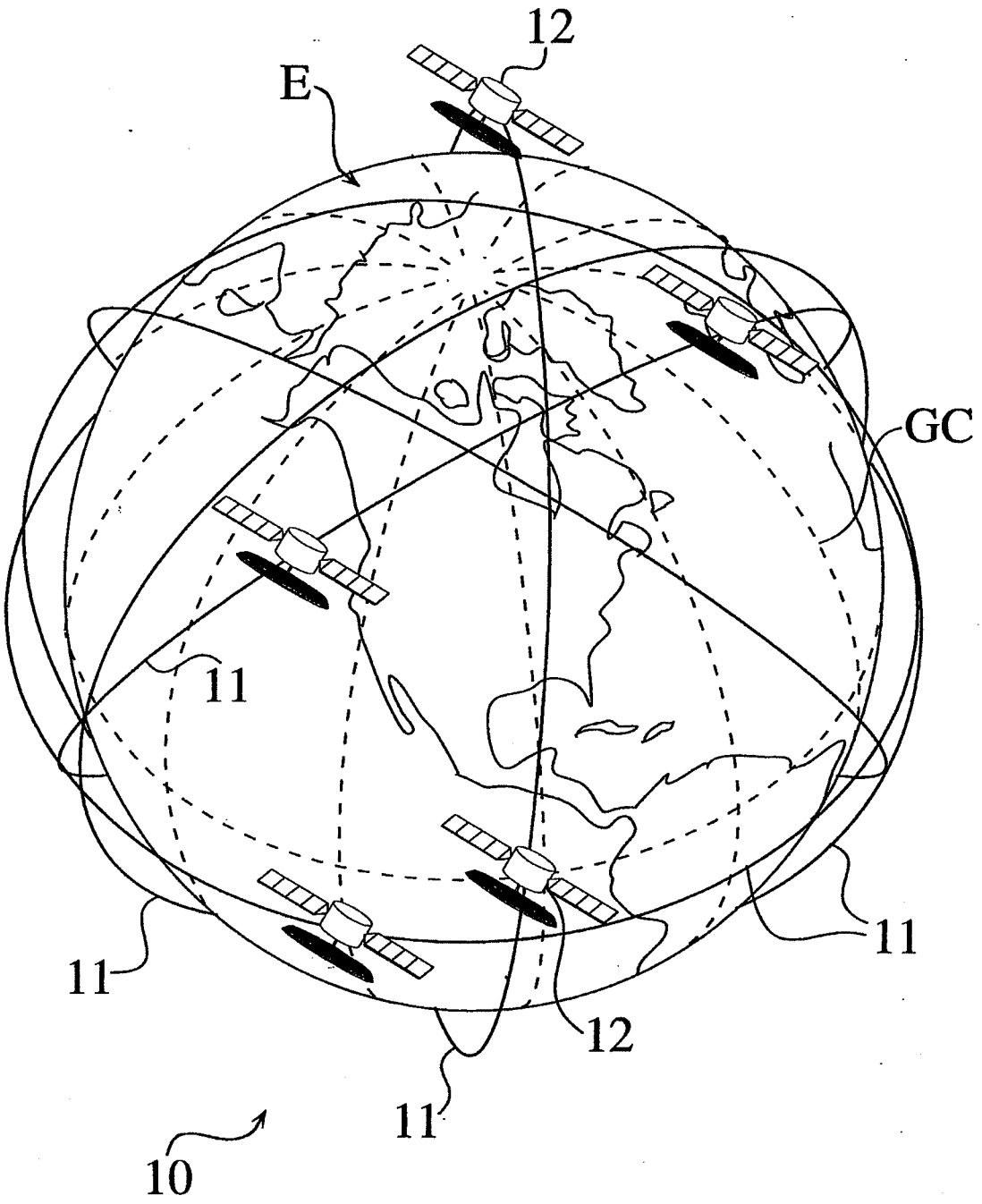

Fig. 1

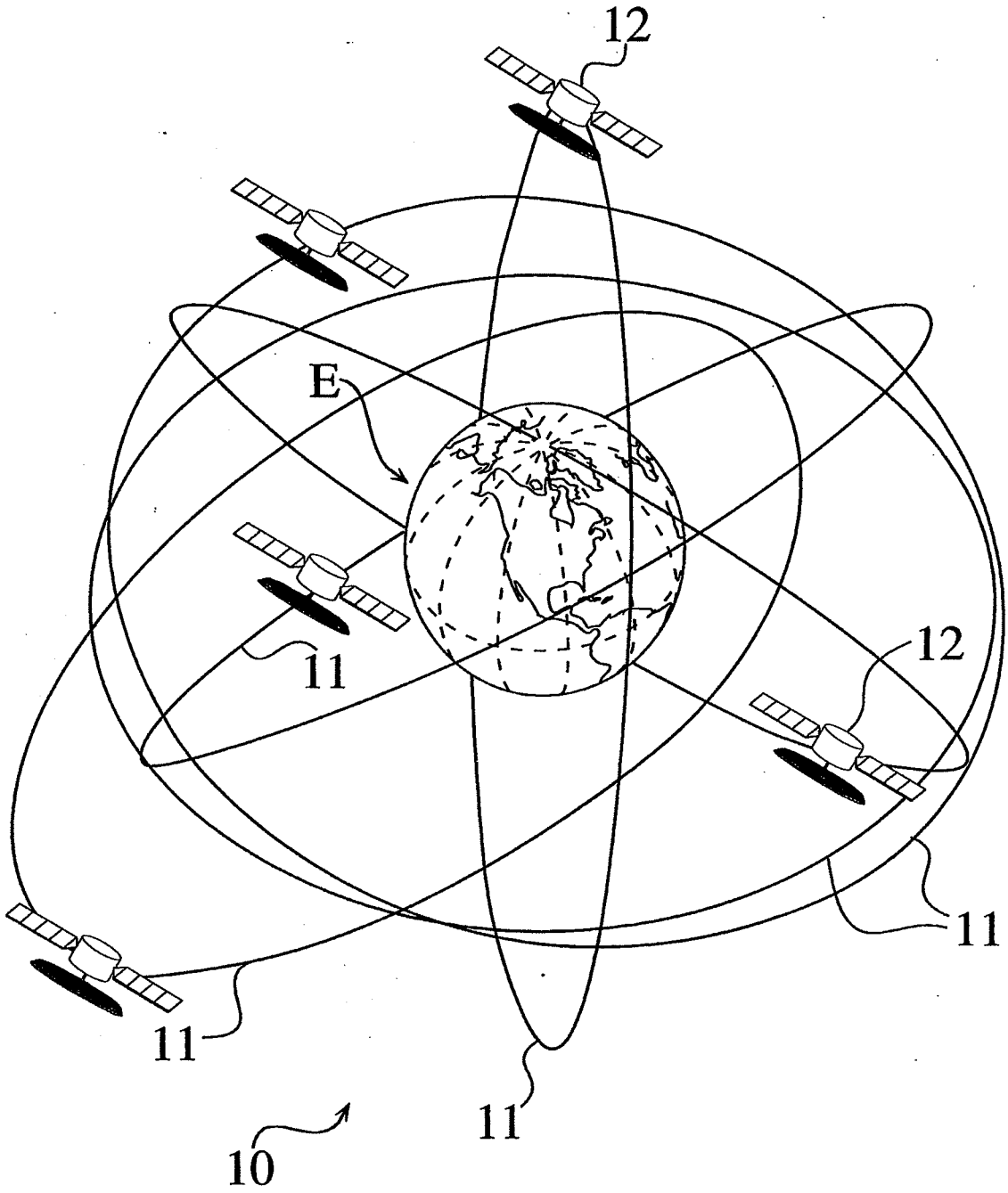

Fig. 2

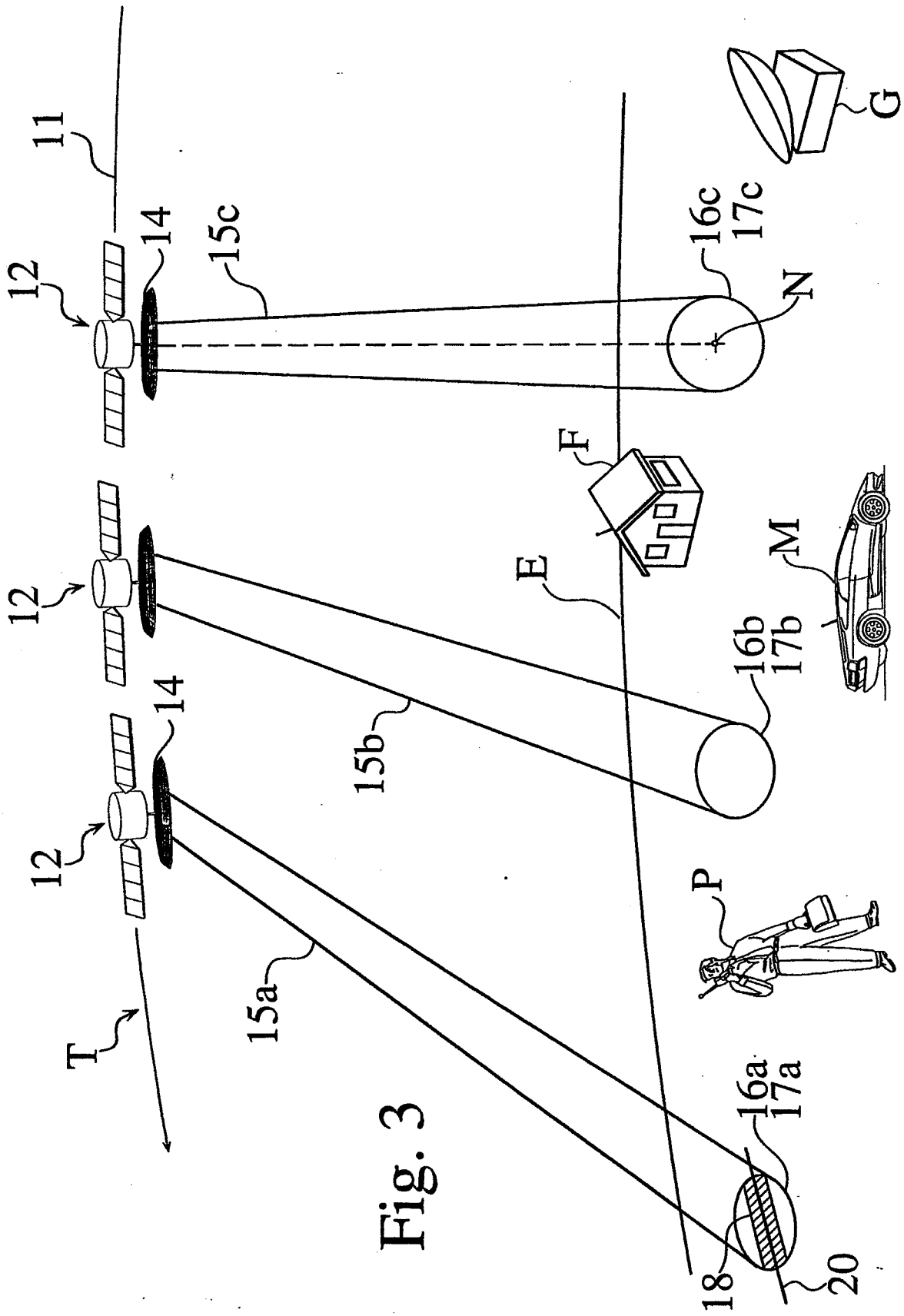

Fig. 3

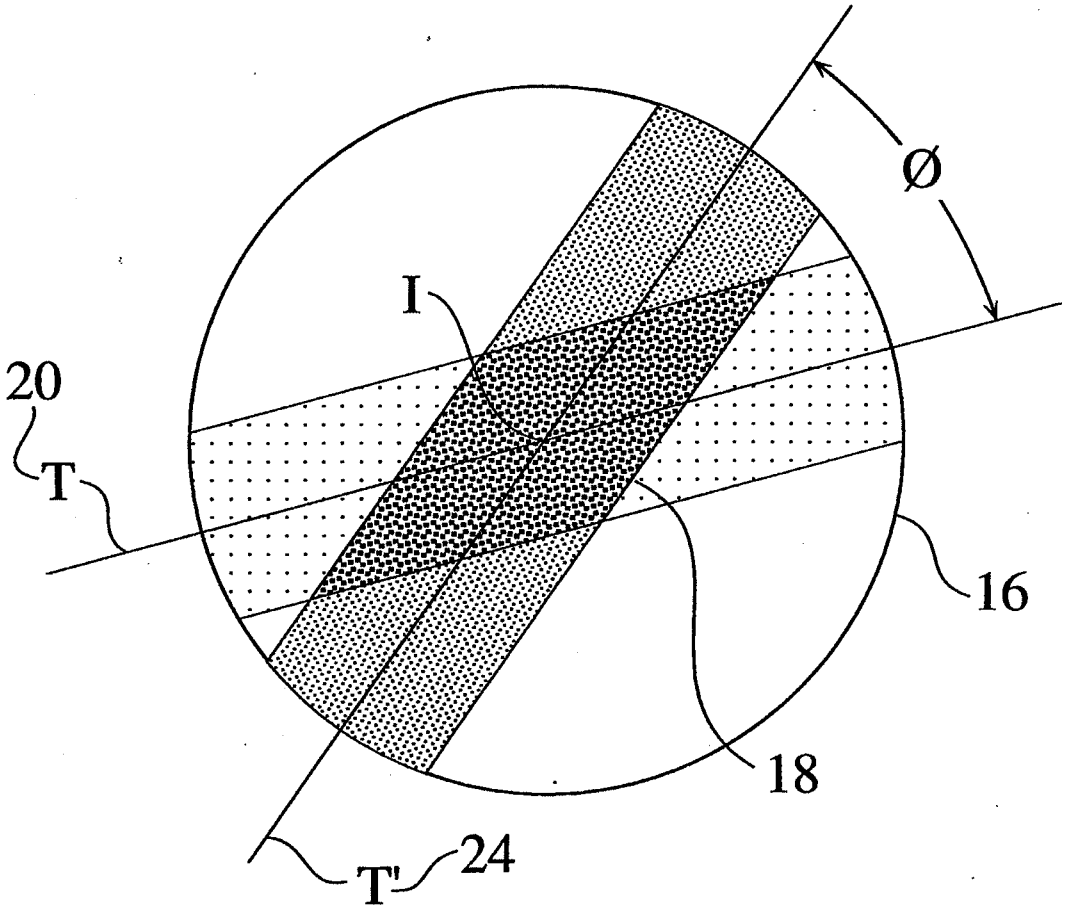

Fig. 4

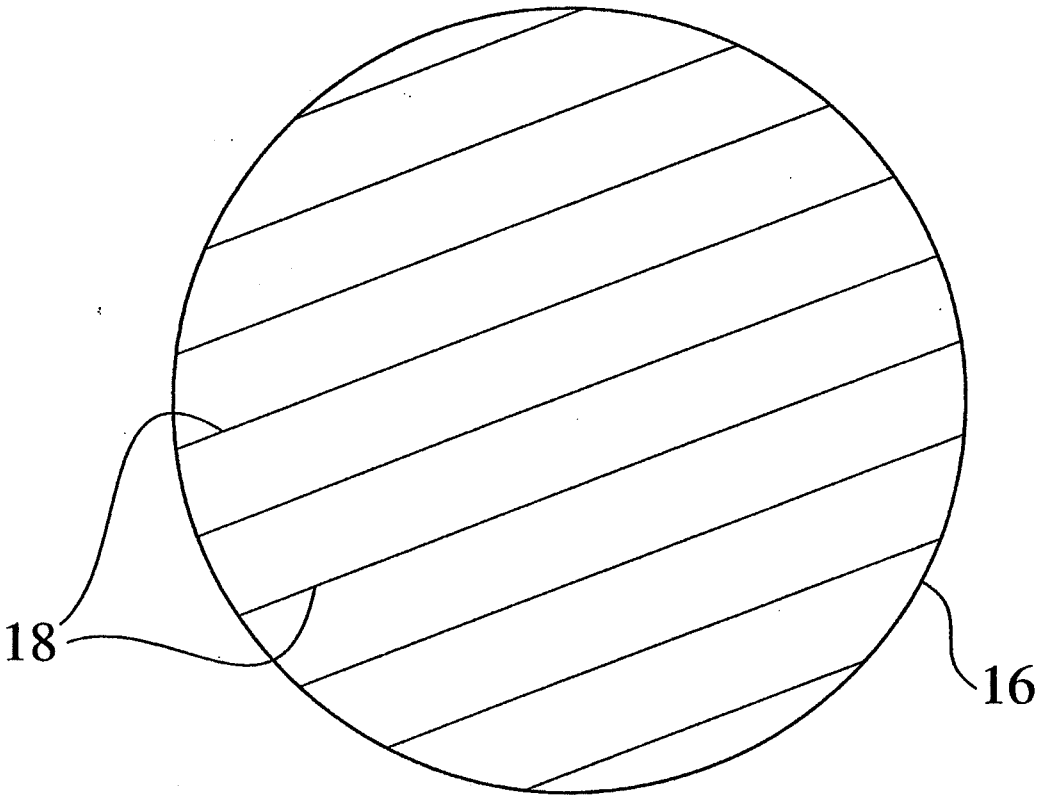

Fig. 5

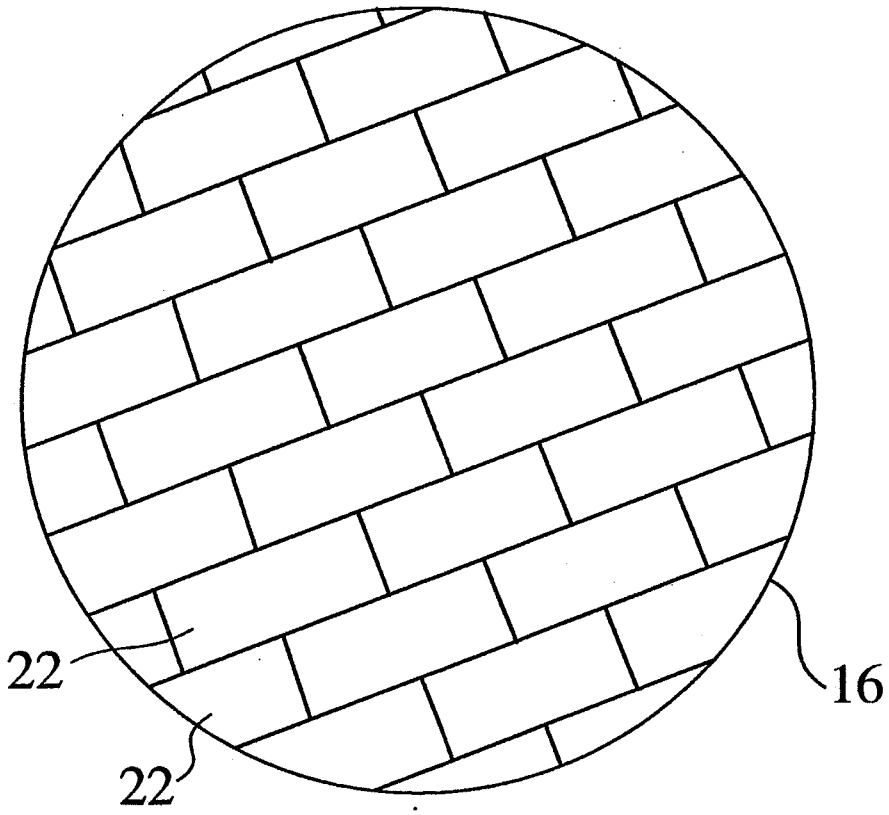

Fig. 6

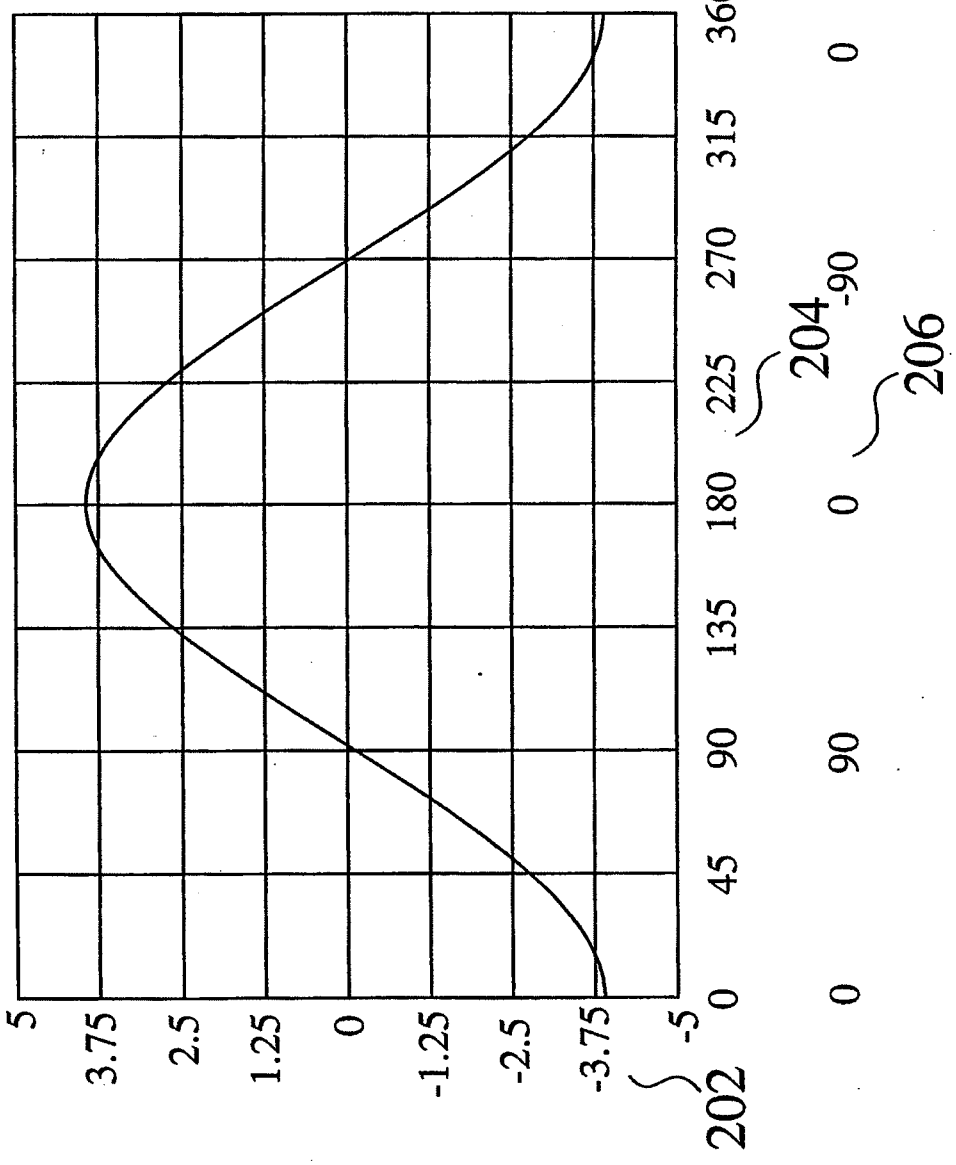
200
5
3.75
2.5
1.25
0
-1.25
-2.5
-3.75
-5
202
0
45
90
135
180
225
270
315
360
0
90
0
-90
0
204
206

Fig. 7

Fig. 8

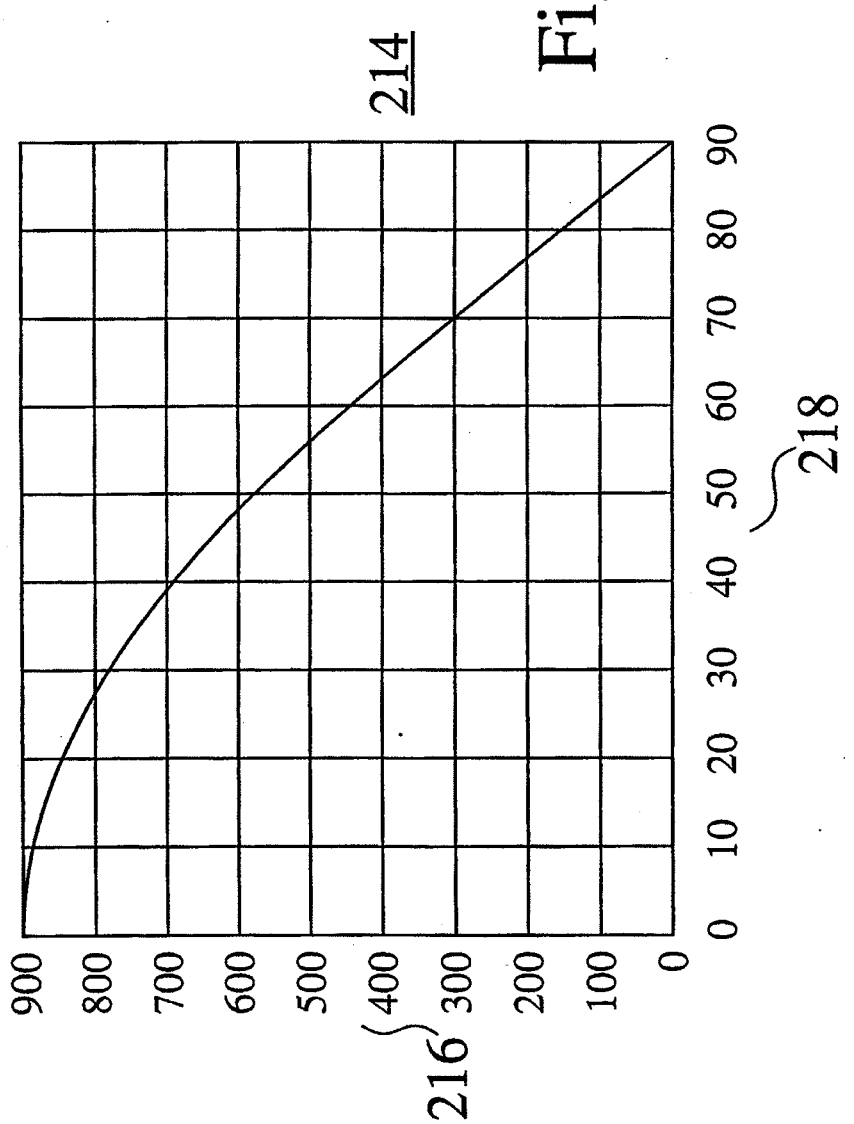
214
900
800
700
600
500
400
300
200
100
0
216
0
10
20
30
40
50
60
70
80
90
218

Fig. 9

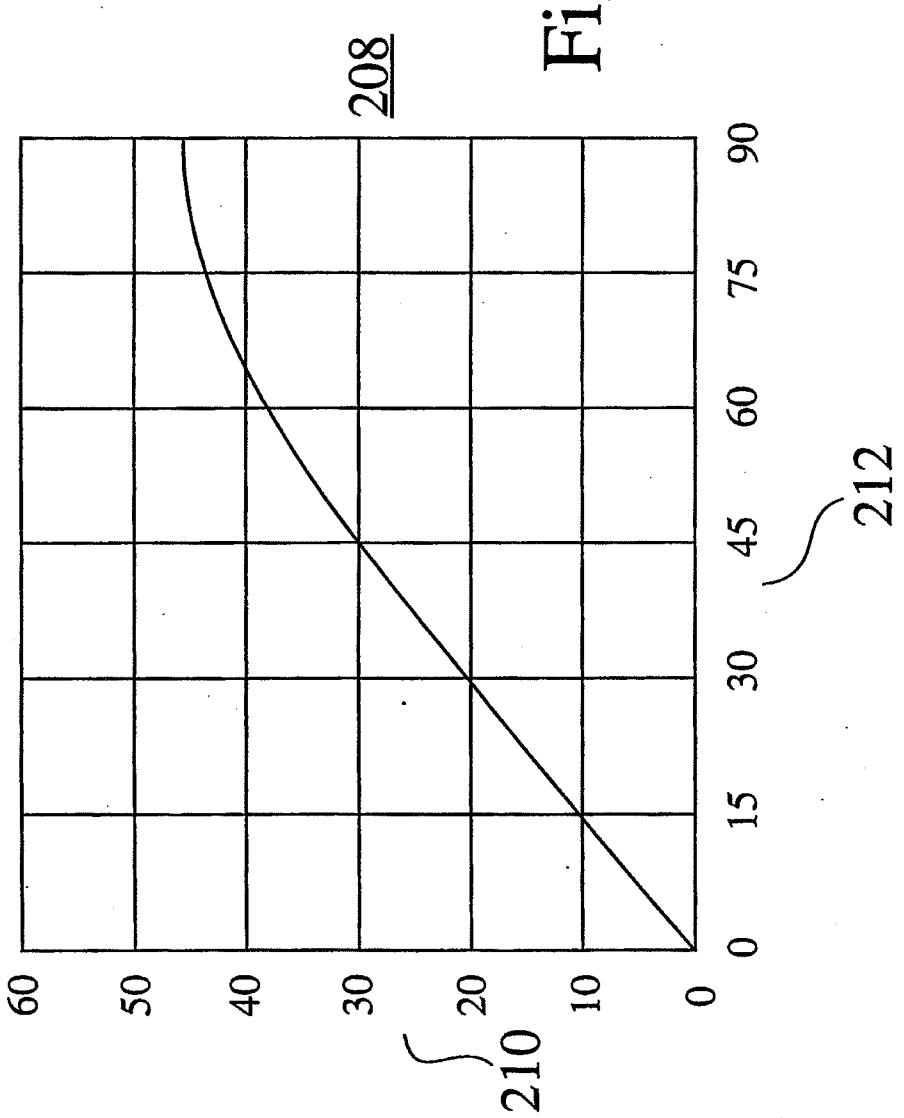

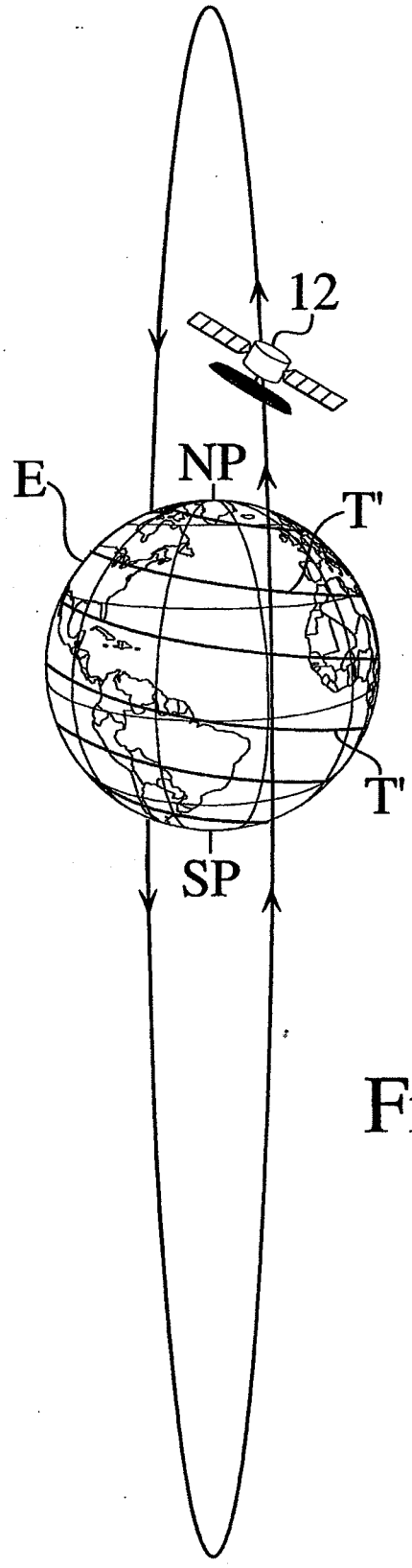

Fig. 10

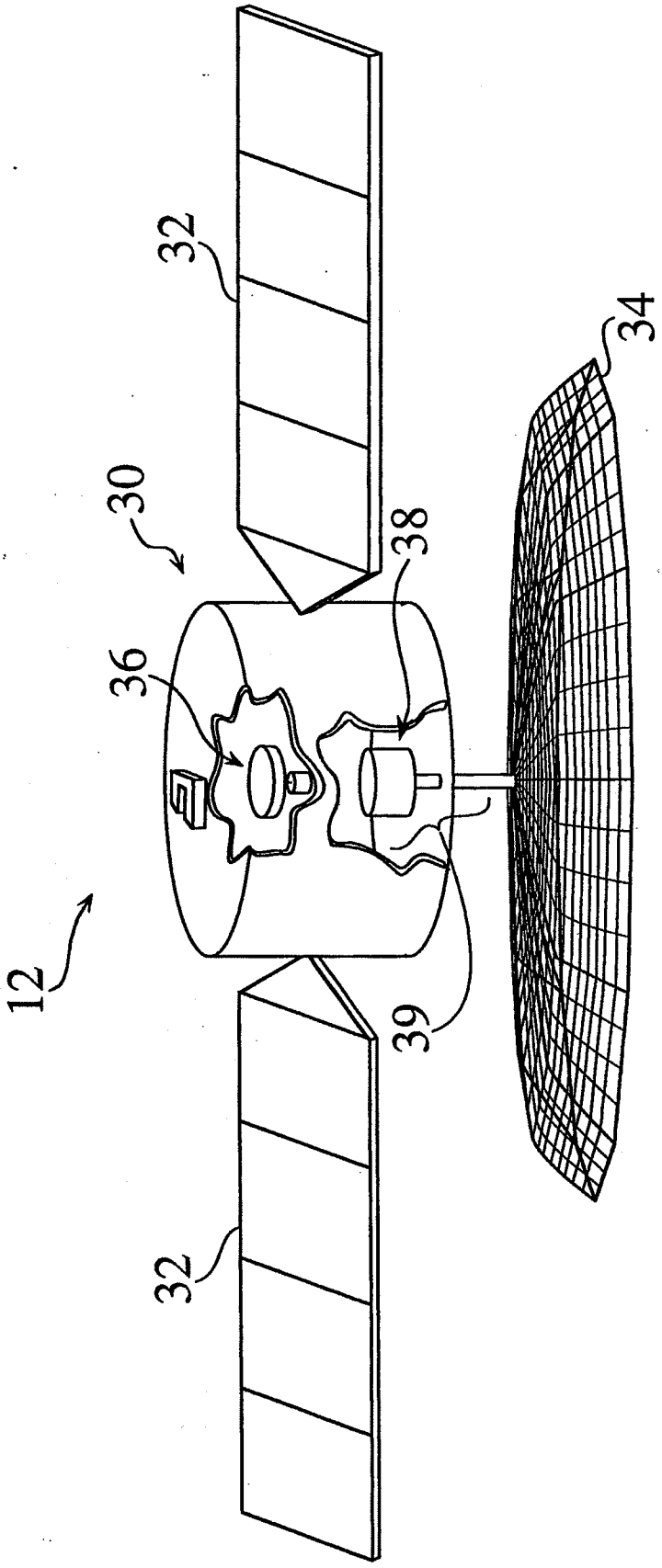

Fig. 11

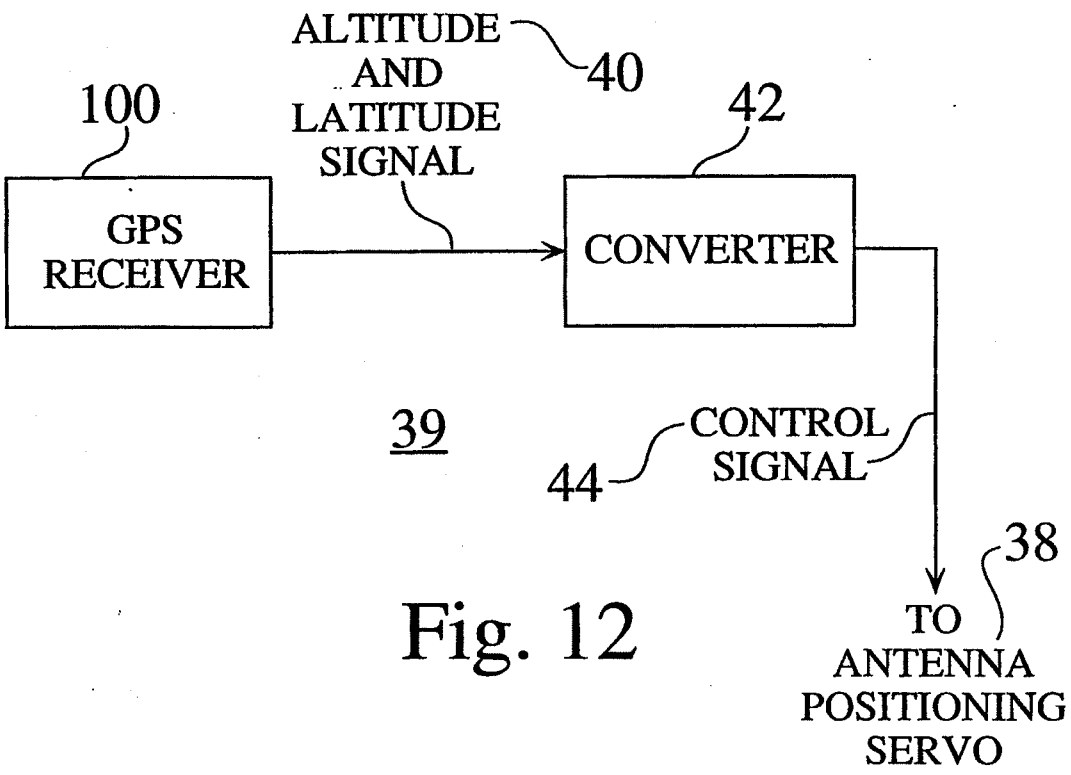
ALTITUDE AND LATITUDE SIGNAL
40
100
42
GPS RECEIVER
CONVERTER
39
44
CONTROL SIGNAL
38
TO ANTENNA POSITIONING SERVO

Fig. 12

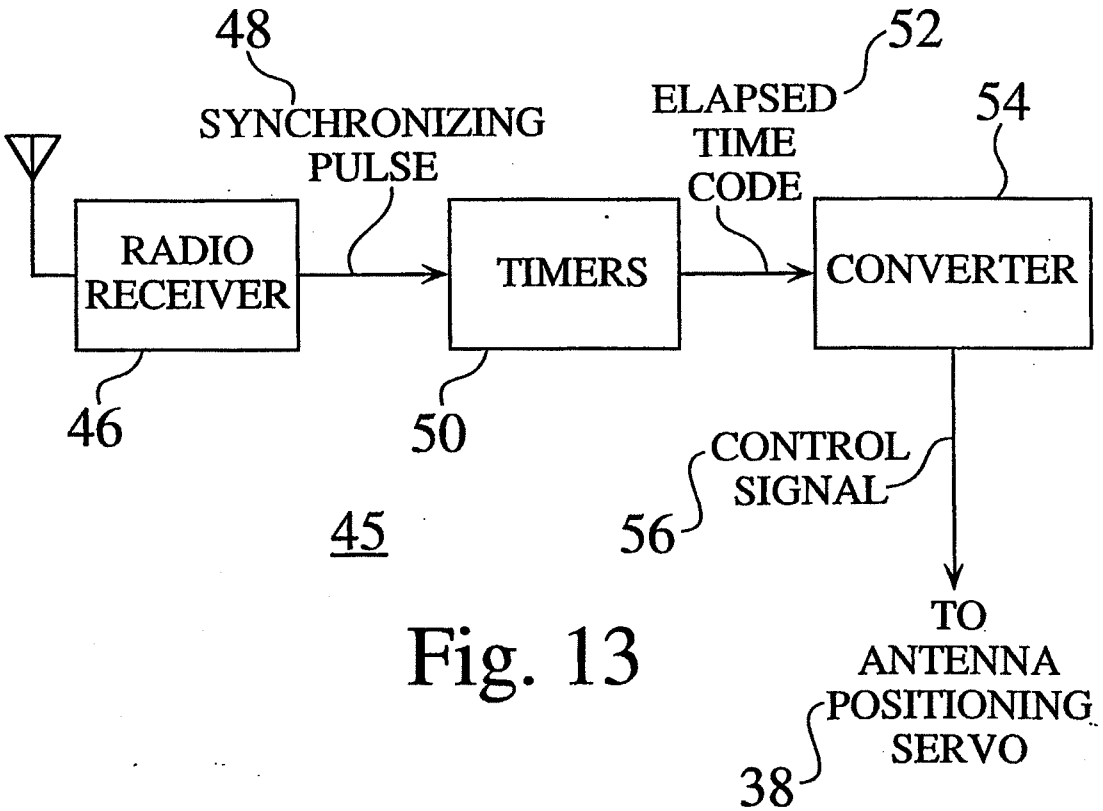
48
SYNCHRONIZING PULSE
52
ELAPSED TIME CODE
54
RADIO RECEIVER
TIMERS
CONVERTER
46
50
45
56
CONTROL SIGNAL
TO ANTENNA POSITIONING SERVO
38

Fig. 13

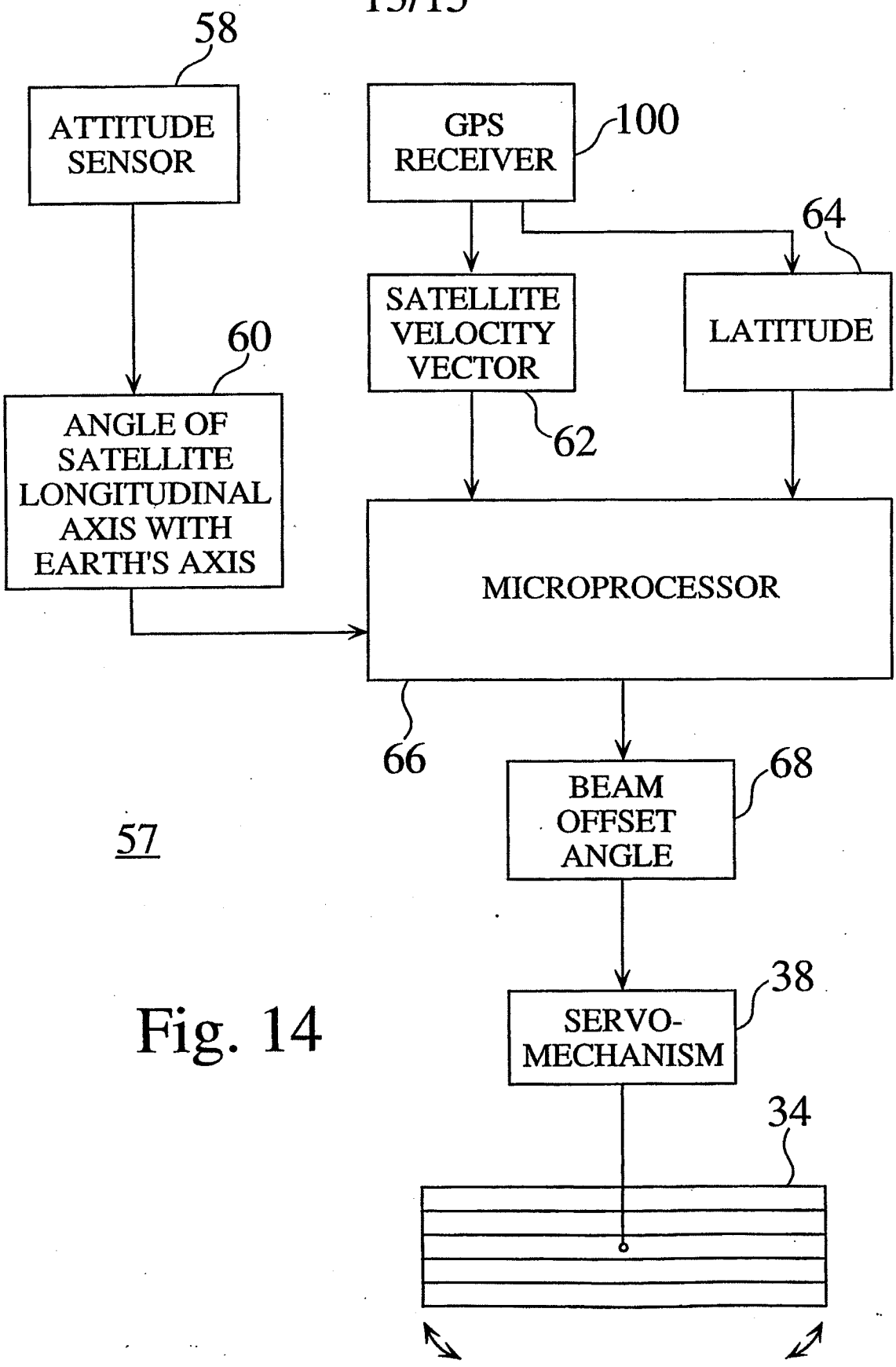
58
ATTITUDE SENSOR
GPS RECEIVER
100
64
SATELLITE VELOCITY VECTOR
LATITUDE
60
ANGLE OF SATELLITE LONGITUDINAL AXIS WITH EARTH'S AXIS
62
MICROPROCESSOR
66
BEAM OFFSET ANGLE
68
57
SERVO-MECHANISM
38
34

Fig. 14

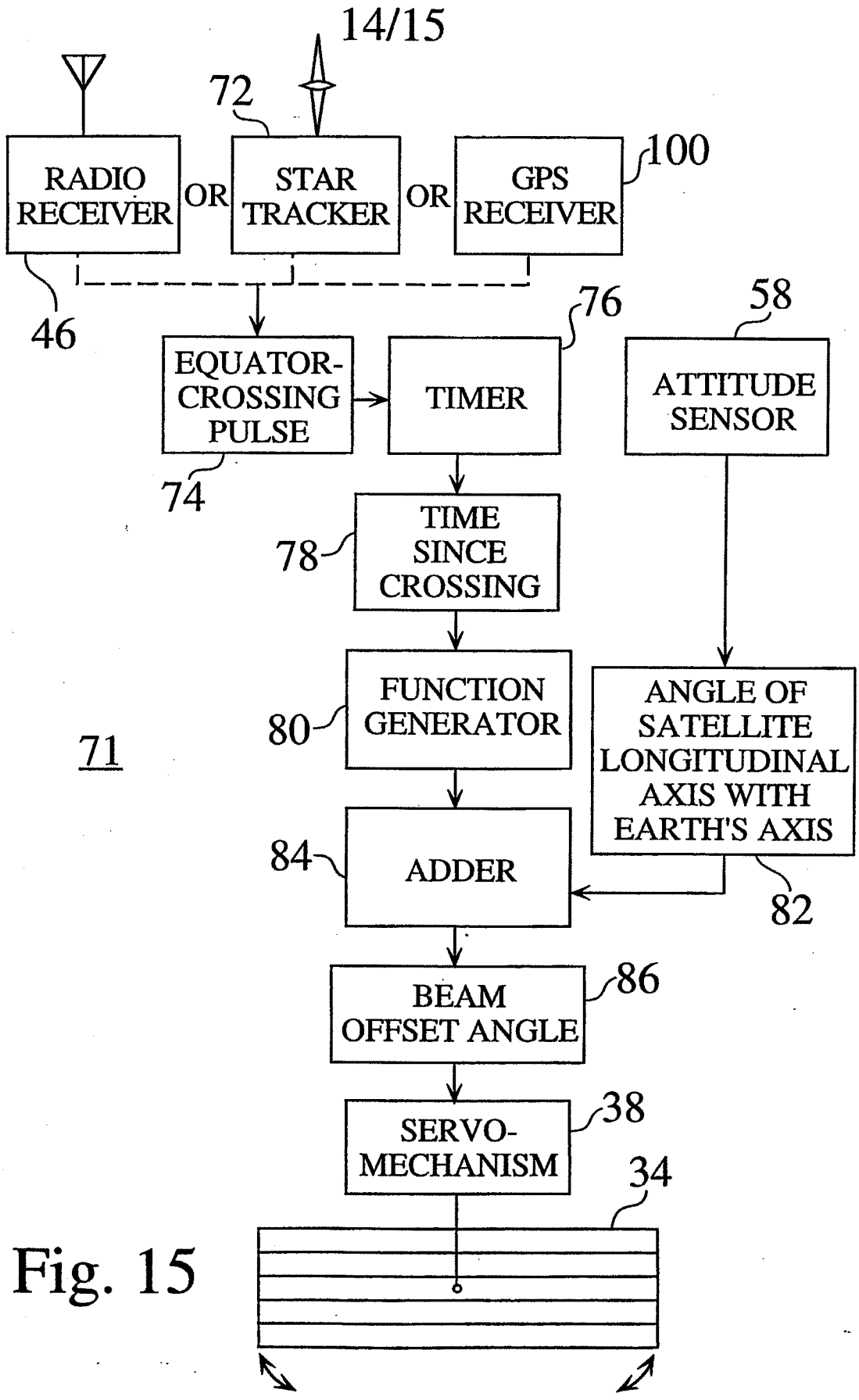
14/15
72
RADIO RECEIVER
OR
STAR TRACKER
OR
GPS RECEIVER
100
46
EQUATOR-CROSSING PULSE
74
TIMER
76
58
ATTITUDE SENSOR
78
TIME SINCE CROSSING
80
FUNCTION GENERATOR
71
ANGLE OF SATELLITE LONGITUDINAL AXIS WITH EARTH'S AXIS
82
84
ADDER
86
BEAM OFFSET ANGLE
38
SERVO-MECHANISM
34

Fig. 15

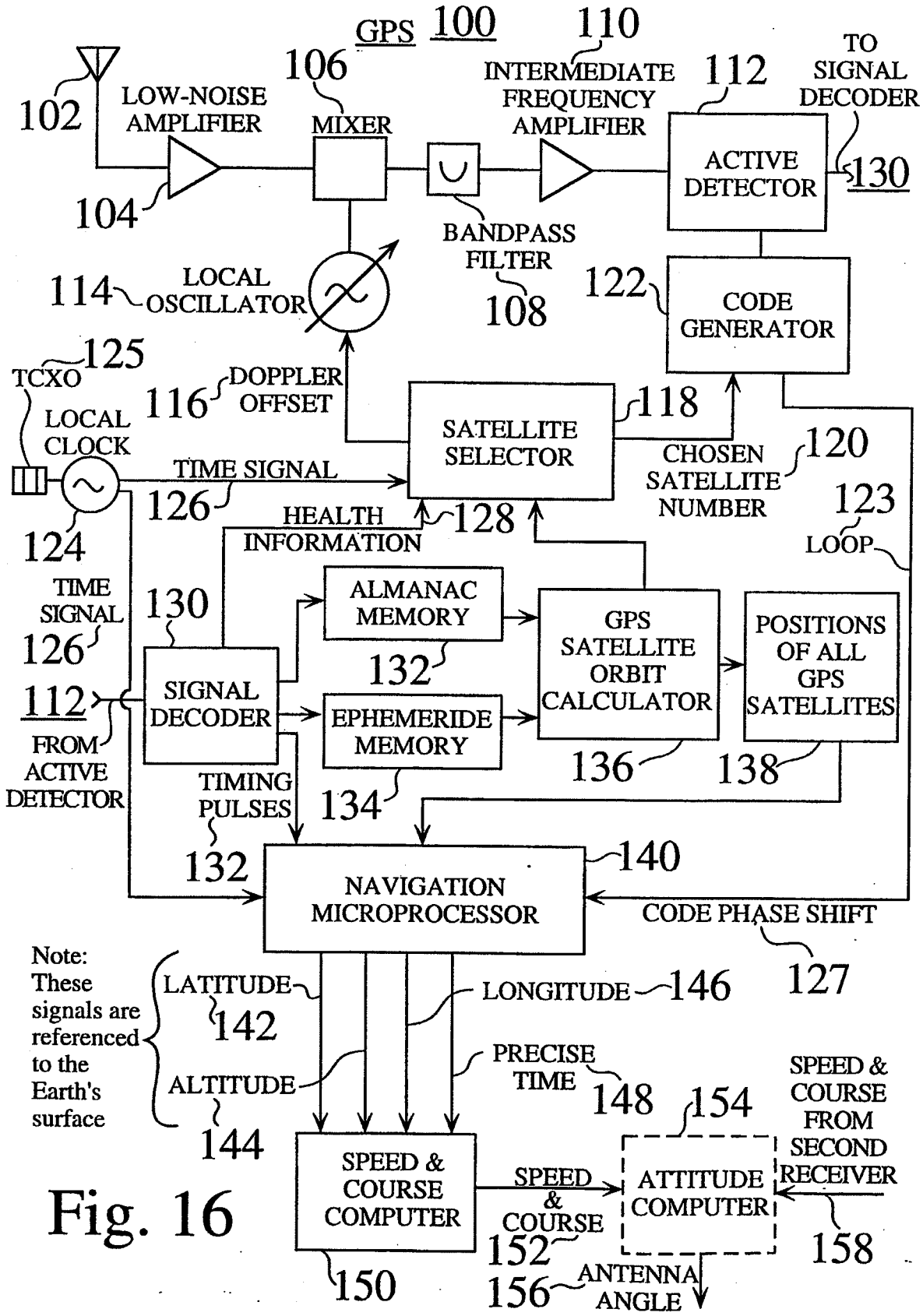
GPS 100
102
LOW-NOISE AMPLIFIER
104
106
MIXER
110
INTERMEDIATE FREQUENCY AMPLIFIER
112
TO SIGNAL DECODER
ACTIVE DETECTOR
130
BANDPASS FILTER
108
114
LOCAL OSCILLATOR
122
CODE GENERATOR
125
TCXO
LOCAL CLOCK
124
116
DOPPLER OFFSET
SATELLITE SELECTOR
118
120
CHOSEN SATELLITE NUMBER
123
LOOP
TIME SIGNAL
126
HEALTH INFORMATION
128
TIME SIGNAL
126
130
SIGNAL DECODER
ALMANAC MEMORY
132
EPHEMERIDE MEMORY
134
GPS SATELLITE ORBIT CALCULATOR
136
POSITIONS OF ALL GPS SATELLITES
138
112
FROM ACTIVE DETECTOR
TIMING PULSES
132
NAVIGATION MICROPROCESSOR
140
CODE PHASE SHIFT
127
Note: These signals are referenced to the Earth's surface
LATITUDE
142
LONGITUDE
146
ALTITUDE
144
PRECISE TIME
148
154
SPEED & COURSE FROM SECOND RECEIVER
158
SPEED & COURSE COMPUTER
150
SPEED & COURSE
152
ATTITUDE COMPUTER
156
ANTENNA ANGLE

Fig. 16

INTERNATIONAL SEARCH REPORT

Interna. .al Application No
PCT/US 97/00204

A. CLASSIFICATION OF SUBJECT MATTER
IPC 6 H04B7/204

According to International Patent Classification (IPC) or to both national classification and IPC

B. FIELDS SEARCHED

Minimum documentation searched (classification system followed by classification symbols)
IPC 6 H04B

Documentation searched other than minimum documentation to the extent that such documents are included in the fields searched

Electronic data base consulted during the international search (name of data base and, where practical, search terms used)

C. DOCUMENTS CONSIDERED TO BE RELEVANT

Category °	Citation of document, with indication, where appropriate, of the relevant passages	Relevant to claim No.
A	FINEAN R J: "MOBILE SATELLITE COMMUNICATIONS PROPOSALS" BT TECHNOLOGY JOURNAL, vol. 14, no. 3, July 1996, pages 74-80, XP000598157 see page 75, left-hand column, line 36 - page 79, left-hand column, line 10; figures 1,2,4 ---	1,2,7,13
A	US 5 548 294 A (STURZA) 20 August 1996 see column 5, line 50 - column 6, line 65; figures 1,2 ---	1,2,7,13
A	EP 0 549 220 A (MOTOROLA) 30 June 1993 see claims 1-10; figures 1-5 ---	1,2,7,13

-/--

[X] Further documents are listed in the continuation of box C.

[X] Patent family members are listed in annex.

° Special categories of cited documents :

"A" document defining the general state of the art which is not considered to be of particular relevance

"E" earlier document but published on or after the international filing date

"L" document which may throw doubts on priority claim(s) or which is cited to establish the publication date of another citation or other special reason (as specified)

"O" document referring to an oral disclosure, use, exhibition or other means

"P" document published prior to the international filing date but later than the priority date claimed

"T" later document published after the international filing date or priority date and not in conflict with the application but cited to understand the principle or theory underlying the invention

"X" document of particular relevance; the claimed invention cannot be considered novel or cannot be considered to involve an inventive step when the document is taken alone

"Y" document of particular relevance; the claimed invention cannot be considered to involve an inventive step when the document is combined with one or more other such documents, such combination being obvious to a person skilled in the art.

"&" document member of the same patent family

2

Date of the actual completion of the international search	Date of mailing of the international search report
6 October 1997	16. 10. 97
Name and mailing address of the ISA European Patent Office, P.B. 5818 Patentlaan 2 NL - 2280 HV Rijswijk Tel. (+31-70) 340-2040, Tx. 31 651 epo nl, Fax: (+31-70) 340-3016	Authorized officer Bischof, J-L

Form PCT/ISA/210 (second sheet) (July 1992)

INTERNATIONAL SEARCH REPORT

Interna. .al Application No
PCT/US 97/00204

C.(Continuation) DOCUMENTS CONSIDERED TO BE RELEVANT

Category °	Citation of document, with indication, where appropriate, of the relevant passages	Relevant to claim No.
A	EP 0 516 039 A (ALCATEL ESPACE) 2 December 1992 see claims 1-10; figures 1-8	1,2,7,13

Form PCT/ISA/210 (continuation of second sheet) (July 1992)

INTERNATIONAL SEARCH REPORT

Information on patent family members

Interna[illegible]al Application No
PCT/US 97/00204

Patent document cited in search report	Publication date	Patent family member(s)	Publication date
US 5548294 A	20-08-96	NONE	
EP 549220 A	30-06-93	US 5227802 A	13-07-93
		CA 2086081 A	24-06-93
		JP 5284072 A	29-10-93
EP 516039 A	02-12-92	FR 2677197 A	04-12-92
		AU 645905 B	27-01-94
		AU 1713792 A	03-12-92
		CA 2070082 A	01-12-92
		JP 5167487 A	02-07-93
		NZ 242764 A	25-11-94

WHAT IS CLAIMED IS:

1. A method for hub-spoke, bent-pipe satellite communication utilizing a satellite containing a plurality of pathways, comprising:

specifying a weight set and a beam hop frame definition for a beam hopping frame, the beam hopping frame comprising a plurality of timeslots, the specified weight set comprising a plurality of receive weight vectors and a plurality of transmit weight vectors for generating uplink beam signals and downlink beam signals in timeslots of the beam hopping frame, the specified beam hop frame definition defining a plurality of sequential dwell times and a plurality of pathway gains, each timeslot associated with a dwell time; and

operating the satellite to generate the uplink beam signals and downlink beam signals for pathways in accordance with the specified weight set and the specified beam hop frame definition,

wherein the specified weight set and the specified beam hop frame definition support an allocation of capacity between forward traffic, from at least one gateway to a plurality of terminals, and return traffic, from a plurality of terminals to at least one gateway.

2. The method of claim 1, wherein the specified weight set and the specified beam hop frame definition are a first weight set and a first beam hop frame definition supporting a first allocation of capacity between forward traffic and return traffic, and the method further comprises:

specifying a second weight set and a second beam hop frame definition for a beam hopping frame; and

switching from operation of the satellite in accordance with the first weight set and the first beam hop frame definition to operation of the satellite to generate the uplink beam signals and downlink beam signals for pathways in accordance with the specified second weight set and the specified second beam hop frame definition,

wherein the specified second weight set and the specified second beam hop frame definition support a second allocation of capacity between forward traffic and return traffic.

3. The method of claim 1, wherein specifying the weight set and the beam hop frame definition for the beam hopping frame comprises configuring a first fraction of the plurality of pathways as dedicated forward pathways for all timeslots in the beam hopping frame and configuring a second fraction of the plurality of pathways as dedicated return pathways for all timeslots in the beam hopping frame.

4. The method of claim 1, wherein specifying the weight set and the beam hop frame definition for the beam hopping frame comprises, for at least one pathway of the plurality of pathways, configuring the pathway as a forward pathway for a first fraction of time in the beam hopping frame and configuring the pathway as a return pathway for a second fraction of time in the beam hopping frame.

5. The method of claim 1, wherein specifying the weight set and the beam hop frame definition for the beam hopping frame comprises:

configuring at least one pathway of the plurality of pathways as a forward pathway for at least one timeslot in the beam hopping frame; and

configuring at least one pathway of the plurality of pathways as a return pathway for at least one timeslot in the beam hopping frame,

wherein

configuring a pathway as a forward pathway comprises configuring the pathway for reception of a multiplexed signal from a gateway destined for a plurality of terminals, the plurality of terminals located in a respective forward link coverage area;

configuring a pathway as a return pathway comprises configuring the pathway for reception of a composite signal derived from a plurality of terminals and destined for a gateway, the plurality of terminals located in a respective return link coverage area;

a union of the forward link coverage areas of all the forward pathways during the beam hopping frame defines a total forward link coverage area;

a union of the return link coverage areas of all the return pathways during the beam hopping frame defines a total return link coverage area; and

the total forward link coverage area differs from the total return link coverage area.

6. The method of claim 1, wherein specifying the weight set and the beam hop frame definition for the beam hopping frame comprises configuring the pathways of the plurality of pathways such that each gateway transmits forward traffic on at least one forward pathway to a plurality of terminals and receives return traffic on at least one return pathway from the same plurality of terminals, implementing a one-to-one mapping between gateways and the pluralities of terminals the gateways service.

7. The method of claim 1, wherein specifying the weight set and the beam hop frame definition for the beam hopping frame comprises configuring the pathways of the plurality of pathways such that each gateway of a plurality of gateways operates half-duplex by transmitting forward traffic on at least one forward pathway to a respective plurality of terminals, and all pluralities of terminals transmit return traffic on return pathways to a same shared receive gateway.

8. A method for hub-spoke, bent-pipe satellite communication utilizing a satellite containing a plurality of pathways, the method performed at the satellite and comprising:

obtaining a specified weight set and a specified beam hop frame definition for a beam hopping frame, the beam hopping frame comprising a plurality of timeslots, the specified weight set comprising a plurality of receive weight vectors and a plurality of transmit weight vectors for generating uplink beam signals and downlink beam signals in timeslots of the beam hopping frame, the specified beam hop frame definition defining a plurality of sequential dwell times and a plurality of pathway gains, each timeslot associated with a dwell time;

generating a plurality of receive weights and a plurality of transmit weights in accordance with the specified weight set;

setting the plurality of pathway gains in accordance with the specified beam hop frame definition; and

generating the uplink beam signals and downlink beam signals for pathways using the plurality of receive weights, the plurality of pathway gains, and the plurality of transmit weights in accordance with the plurality of sequential dwell times defined by the specified beam hop frame definition,

wherein the specified weight set and the specified beam hop frame definition support an allocation of capacity between forward traffic, from at least one gateway to a plurality of terminals, and return traffic, from a plurality of terminals to at least one gateway.

9. The method of claim 8, wherein the specified weight set and the specified beam hop frame definition are a first weight set and a first beam hop frame definition supporting a first allocation of capacity between forward traffic and return traffic, the first weight set comprising a first plurality of receive weight vectors and a first plurality of transmit weight vectors, the specified first beam hop frame definition defining a first

plurality of sequential dwell times and a first plurality of pathway gains, and the method further comprises:

obtaining a specified second weight set and a specified second beam hop frame definition for a beam hopping frame, the specified second weight set comprising a second plurality of receive weight vectors and a second plurality of transmit weight vectors for generating uplink beam signals and downlink beam signals in timeslots of the beam hopping frame, the specified second beam hop frame definition defining a second plurality of sequential dwell times and a second plurality of pathway gains;

generating a second plurality of receive weights and a second plurality of transmit weights in accordance with the specified second weight set;

setting the second plurality of pathway gains in accordance with the specified second beam hop frame definition; and

switching generation of the uplink beam signals and downlink beam signals for pathways using the first plurality of receive weights, the first plurality of pathway gains, and the first plurality of transmit weights in accordance with the first plurality of sequential dwell times to generation of the uplink beam signals and downlink beam signals for pathways using the second plurality of receive weights, the second plurality of pathway gains, and the second plurality of transmit weights in accordance with the second plurality of sequential dwell times defined by the specified second beam hop frame definition,

wherein the specified second weight set and the specified second beam hop frame definition support a second allocation of capacity between forward traffic and return traffic.

10. The method of claim 8, wherein the specified weight set and the specified beam hop frame definition specifies configuration of a first fraction of the plurality of pathways as dedicated forward pathways for all timeslots in the beam hopping frame and configuration of a second fraction of the plurality of pathways as dedicated return pathways for all timeslots in the beam hopping frame.

11. The method of claim 8, wherein the specified weight set and the specified beam hop frame definition specifies, for at least one pathway of the plurality of pathways, configuration of the pathway as a forward pathway for a first fraction of time in the beam hopping frame and configuration of the pathway as a return pathway for a second fraction of time in the beam hopping frame.

12. The method of claim 8, wherein the specified weight set and the specified beam hop frame definition specifies configuration of at least one pathway of the plurality of pathways as a forward pathway for at least one timeslot in the beam hopping frame, and configuration of at least one pathway of the plurality of pathways as a return pathway for at least one timeslot in the beam hopping frame,

wherein

configuring a pathway as a forward pathway comprises configuring the pathway for reception of a multiplexed signal from a gateway destined for a plurality of terminals, the plurality of terminals located in a respective forward link coverage area;

configuring a pathway as a return pathway comprises configuring the pathway for reception of a composite signal derived from a plurality of terminals and destined for a gateway, the plurality of terminals located in a respective return link coverage area;

a union of the forward link coverage areas of all the forward pathways during the beam hopping frame defines a total forward link coverage area;

a union of the return link coverage areas of all the return pathways during the beam hopping frame defines a total return link coverage area; and

the total forward link coverage area differs from the total return link coverage area.

13. The method of claim 8, wherein the specified weight set and the specified beam hop frame definition specifies configuration of the pathways of the plurality of pathways such that each gateway transmits forward traffic on at least one forward pathway to a plurality of terminals and receives return traffic on at least one return pathway from the same plurality of terminals, implementing a one-to-one mapping between gateways and the pluralities of terminals the gateways service.

14. The method of claim 8, wherein the specified weight set and the specified beam hop frame definition specifies configuration of the pathways of the plurality of pathways such that each gateway of a plurality of gateways operates half-duplex by transmitting forward traffic on at least one forward pathway to a respective plurality of terminals, and all pluralities of terminals transmit return traffic on return pathways to a same shared receive gateway.

15. A hub-spoke, bent-pipe satellite communications system comprising:

a plurality of terminals;

a plurality of gateways configured to communicate with the plurality of terminals;

a controller configured to:

specify a weight set and a beam hop frame definition for a beam hopping frame, the beam hopping frame comprising a plurality of timeslots, the specified weight set comprising a plurality of receive weight vectors and a plurality of transmit weight vectors for generating uplink beam signals and downlink beam signals in timeslots of the beam hopping frame, the specified beam hop frame definition defining a plurality of sequential dwell times and a plurality of pathway gains, each timeslot associated with a dwell time; and

a satellite containing a plurality of pathways, the satellite configured to:

obtain the specified weight set and the specified beam hop frame definition for a beam hopping frame;

generate a plurality of receive weights and a plurality of transmit weights in accordance with the specified weight set;

set the plurality of pathway gains in accordance with the specified beam hop frame definition; and

generate the uplink beam signals and downlink beam signals for pathways using the plurality of receive weights, the plurality of pathway gains, and the plurality of transmit weights in accordance with the plurality of sequential dwell times defined by the specified beam hop frame definition,

wherein the specified weight set and the specified beam hop frame definition support an allocation of capacity between forward traffic, from at least one gateway to a plurality of terminals, and return traffic, from a plurality of terminals to at least one gateway.

16. The system of claim 15, wherein

the specified weight set and the specified beam hop frame definition are a first weight set and a first beam hop frame definition supporting a first allocation of capacity between forward traffic and return traffic, the first weight set comprising a first plurality of receive weight vectors and a first plurality of transmit weight vectors, the specified first beam hop frame definition defining a first plurality of sequential dwell times and a first plurality of pathway gains;

the controller is further configured to:

specify a second weight set and a second beam hop frame definition for a beam hopping frame, the specified second weight set comprising a second plurality of receive weight vectors and a second plurality of transmit weight vectors for generating uplink beam signals and downlink beam signals in timeslots of the beam hopping frame, the specified second beam hop frame definition defining a second plurality of sequential dwell times and a second plurality of pathway gains;

the satellite is further configured to:

obtain the specified second weight set and the specified second beam hop frame definition for a beam hopping frame;

generate a second plurality of receive weights and a second plurality of transmit weights in accordance with the specified second weight set;

set the second plurality of pathway gains in accordance with the specified second beam hop frame definition; and

switch generation of the uplink beam signals and downlink beam signals for pathways using the first plurality of receive weights, the first plurality of pathway gains, and the first plurality of transmit weights in accordance with the first plurality of sequential dwell times to generation of the uplink beam signals and downlink beam signals for pathways using the second plurality of receive weights, the second plurality of pathway gains, and the second plurality of transmit weights in accordance with the second plurality of sequential dwell times defined by the specified second beam hop frame definition; and

the specified second weight set and the specified second beam hop frame definition support a second allocation of capacity between forward traffic and return traffic.

17. The system of claim 15, wherein specifying the weight set and the beam hop frame definition for the beam hopping frame comprises configuring a first fraction of the plurality of pathways as dedicated forward pathways for all timeslots in the beam hopping frame and configuring a second fraction of the plurality of pathways as dedicated return pathways for all timeslots in the beam hopping frame.

18. The system of claim 15, wherein specifying the weight set and the beam hop frame definition for the beam hopping frame comprises, for at least one pathway of the plurality of pathways, configuring the pathway as a forward pathway for a first fraction of time in the beam hopping frame and configuring the pathway as a return pathway for a second fraction of time in the beam hopping frame.

19. The system of claim 15, wherein specifying the weight set and the beam hop frame definition for the beam hopping frame comprises:

configuring at least one pathway of the plurality of pathways as a forward pathway for at least one timeslot in the beam hopping frame; and

configuring at least one pathway of the plurality of pathways as a return pathway for at least one timeslot in the beam hopping frame,

wherein

configuring a pathway as a forward pathway comprises configuring the pathway for reception of a multiplexed signal from a gateway destined for a plurality of terminals, the plurality of terminals located in a respective forward link coverage area;

configuring a pathway as a return pathway comprises configuring the pathway for reception of a composite signal derived from a plurality of terminals and destined for a gateway, the plurality of terminals located in a respective return link coverage area;

a union of the forward link coverage areas of all the forward pathways during the beam hopping frame defines a total forward link coverage area;

a union of the return link coverage areas of all the return pathways during the beam hopping frame defines a total return link coverage area; and

the total forward link coverage area differs from the total return link coverage area.

20. The system of claim 15, wherein specifying the weight set and the beam hop frame definition for the beam hopping frame comprises configuring the pathways of the plurality of pathways such that each gateway transmits forward traffic on at least one forward pathway to a plurality of terminals and receives return traffic on at least one return pathway from the same plurality of terminals, implementing a one-to-one mapping between gateways and the pluralities of terminals the gateways service.

21. The system of claim 15, wherein specifying the weight set and the beam hop frame definition for the beam hopping frame comprises configuring the pathways of the plurality of pathways such that each gateway of a plurality of gateways operates half-duplex by transmitting forward traffic on at least one forward pathway to a respective plurality of terminals, and all pluralities of terminals transmit return traffic on return pathways to a same shared receive gateway.

22. The system of claim 15, wherein the controller is a ground terminal of the hub-spoke, bent-pipe satellite communications system.

23. A satellite for hub-spoke, bent-pipe satellite communication, the satellite containing a plurality of pathways and comprising:

one or more processors configured to:

obtain a specified weight set and a specified beam hop frame definition for a beam hopping frame, the beam hopping frame comprising a plurality of timeslots, the specified weight set comprising a plurality of receive weight vectors and a plurality of transmit weight vectors for generating uplink beam signals and downlink beam signals in timeslots of the beam hopping frame, the specified beam hop frame definition defining a plurality of sequential dwell times and a plurality of pathway gains, each timeslot associated with a dwell time;

generate a plurality of receive weights and a plurality of transmit weights in accordance with the specified weight set; and

set the plurality of pathway gains in accordance with the specified beam hop frame definition; and

one or more beam forming networks configured to:

generate the uplink beam signals and downlink beam signals for pathways using the plurality of receive weights, the plurality of pathway gains, and the plurality of transmit weights in accordance with the plurality of sequential dwell times defined by the specified beam hop frame definition,

wherein the specified weight set and the specified beam hop frame definition support an allocation of capacity between forward traffic, from at least one gateway to a plurality of terminals, and return traffic, from a plurality of terminals to at least one gateway.

24. The satellite of claim 23, wherein

the specified weight set and the specified beam hop frame definition are a first weight set and a first beam hop frame definition supporting a first allocation of capacity between forward traffic and return traffic, the first weight set comprising a first plurality of receive weight vectors and a first plurality of transmit weight vectors, the specified first beam hop frame definition defining a first plurality of sequential dwell times and a first plurality of pathway gains;

the one or more processors are further configured to:

obtain a specified second weight set and a specified second beam hop frame definition for a beam hopping frame, the specified second weight set comprising a second plurality of receive weight vectors and a second plurality of transmit weight vectors for generating uplink beam signals and downlink beam signals in timeslots of the beam hopping frame, the specified second beam hop frame definition defining a second plurality of sequential dwell times and a second plurality of pathway gains;

generate a second plurality of receive weights and a second plurality of transmit weights in accordance with the specified second weight set; and

set the second plurality of pathway gains in accordance with the specified second beam hop frame definition; and

the one or more beam forming networks are further configured to:

switch generation of the uplink beam signals and downlink beam signals for pathways using the first plurality of receive weights, the first plurality of pathway gains, and the first plurality of transmit weights in accordance with the first plurality of sequential dwell times to generation of the uplink beam signals and downlink beam signals for pathways using the second plurality of receive weights, the second plurality of pathway gains, and the second plurality of transmit weights in accordance with the second plurality of sequential dwell times defined by the specified second beam hop frame definition,

wherein the specified second weight set and the specified second beam hop frame definition support a second allocation of capacity between forward traffic and return traffic.

25. The satellite of claim 23, wherein the specified weight set and the specified beam hop frame definition specifies configuration of a first fraction of the plurality of pathways as dedicated forward pathways for all timeslots in the beam hopping frame and configuration of a second fraction of the plurality of pathways as dedicated return pathways for all timeslots in the beam hopping frame.

26. The satellite of claim 23, wherein the specified weight set and the specified beam hop frame definition specifies, for at least one pathway of the plurality of pathways, configuration of the pathway as a forward pathway for a first fraction of time in the beam hopping frame and configuration of the pathway as a return pathway for a second fraction of time in the beam hopping frame.

27. The satellite of claim 23, wherein the specified weight set and the specified beam hop frame definition specifies configuration of at least one pathway of the

plurality of pathways as a forward pathway for at least one timeslot in the beam hopping frame, and configuration of at least one pathway of the plurality of pathways as a return pathway for at least one timeslot in the beam hopping frame,

wherein

configuring a pathway as a forward pathway comprises configuring the pathway for reception of a multiplexed signal from a gateway destined for a plurality of terminals, the plurality of terminals located in a respective forward link coverage area;

configuring a pathway as a return pathway comprises configuring the pathway for reception of a composite signal derived from a plurality of terminals and destined for a gateway, the plurality of terminals located in a respective return link coverage area;

a union of the forward link coverage areas of all the forward pathways during the beam hopping frame defines a total forward link coverage area;

a union of the return link coverage areas of all the return pathways during the beam hopping frame defines a total return link coverage area; and

the total forward link coverage area differs from the total return link coverage area.

28. The satellite of claim 23, wherein the specified weight set and the specified beam hop frame definition specifies configuration of the pathways of the plurality of pathways such that each gateway transmits forward traffic on at least one forward pathway to a plurality of terminals and receives return traffic on at least one return pathway from the same plurality of terminals, implementing a one-to-one mapping between gateways and the pluralities of terminals the gateways service.

29. The satellite of claim 23, wherein the specified weight set and the specified beam hop frame definition specifies configuration of the pathways of the plurality of pathways such that each gateway of a plurality of gateways operates half-duplex by transmitting forward traffic on at least one forward pathway to a respective plurality of terminals, and all pluralities of terminals transmit return traffic on return pathways to a same shared receive gateway.

30. A method for hub-spoke, bent-pipe satellite communication utilizing a satellite containing a plurality of pathways, comprising:

specifying a first weight set and a first beam hop frame definition for a beam hopping frame, the beam hopping frame comprising a plurality of timeslots, the specified first

weight set comprising a first plurality of receive weight vectors and a first plurality of transmit weight vectors for generating uplink beam signals and downlink beam signals in timeslots of the beam hopping frame, the specified first beam hop frame definition defining a first plurality of sequential dwell times and a first plurality of pathway gains, each timeslot associated with a dwell time;

operating the satellite to generate the uplink beam signals and downlink beam signals for pathways in accordance with the specified first weight set and the specified first beam hop frame definition;

specifying a second weight set and a second beam hop frame definition for a beam hopping frame, the specified second weight set comprising a second plurality of receive weight vectors and a second plurality of transmit weight vectors for generating uplink beam signals and downlink beam signals in timeslots of the beam hopping frame, the specified second beam hop frame definition defining a second plurality of sequential dwell times and a second plurality of pathway gains; and

switching from operation of the satellite in accordance with the specified first weight set and the specified first beam hop frame definition to operation of the satellite to generate the uplink beam signals and downlink beam signals for pathways in accordance with the specified second weight set and the specified second beam hop frame definition,

wherein the specified first weight set and the specified first beam hop frame definition support first targets of coverage area and capacity allocation based on a first time-based traffic estimate, and the specified second weight set and the specified second beam hop frame definition support second targets of coverage area and capacity allocation based on a second time-based traffic estimate.

31. The method of claim 30, further comprising:

pre-computing and uploading to the satellite for storage a plurality of weight sets, including the first weight set and the second weight set, and a plurality of beam hop frame definitions, including the first beam hop frame definition and the second beam hop frame definition,

wherein switching comprises switching by the satellite in response to receiving a command transmitted from a ground entity.

32. A method for hub-spoke, bent-pipe satellite communication utilizing a satellite containing a plurality of pathways, the method performed at the satellite and comprising:

obtaining a first weight set and a first beam hop frame definition for a beam hopping frame, the beam hopping frame comprising a plurality of timeslots, the specified first weight set comprising a first plurality of receive weight vectors and a first plurality of transmit weight vectors for generating uplink beam signals and downlink beam signals in timeslots of the beam hopping frame, the specified first beam hop frame definition defining a first plurality of sequential dwell times and a first plurality of pathway gains, each timeslot associated with a dwell time;

generating a plurality of receive weights and a plurality of transmit weights in accordance with the specified weight set;

setting the plurality of pathway gains in accordance with the specified beam hop frame definition;

generating the uplink beam signals and downlink beam signals for pathways using the plurality of receive weights, the plurality of pathway gains, and the plurality of transmit weights in accordance with the plurality of sequential dwell times defined by the specified beam hop frame definition;

obtaining a second weight set and a second beam hop frame definition for a beam hopping frame, the specified second weight set comprising a second plurality of receive weight vectors and a second plurality of transmit weight vectors for generating uplink beam signals and downlink beam signals in timeslots of the beam hopping frame, the specified second beam hop frame definition defining a second plurality of sequential dwell times and a second plurality of pathway gains;

generating a second plurality of receive weights and a second plurality of transmit weights in accordance with the specified second weight set;

setting the second plurality of pathway gains in accordance with the specified second beam hop frame definition; and

switching generation of the uplink beam signals and downlink beam signals for pathways using the first plurality of receive weights, the first plurality of pathway gains, and the first plurality of transmit weights in accordance with the first plurality of sequential dwell times to generation of the uplink beam signals and downlink beam signals for pathways using the second plurality of receive weights, the second plurality of pathway gains, and the second plurality of transmit weights in accordance with the second plurality of sequential dwell times defined by the specified second beam hop frame definition,

wherein the specified first weight set and the specified first beam hop frame definition support first targets of coverage area and capacity allocation based on a first time-based traffic estimate, and the specified second weight set and the specified second beam hop

frame definition support second targets of coverage area and capacity allocation based on a second time-based traffic estimate.

33. The method of claim 32, further comprising:

receiving and storing a plurality of weight sets, including the first weight set and the second weight set, and a plurality of beam hop frame definitions, including the first beam hop frame definition and the second beam hop frame definition, the plurality of weight sets and the plurality of beam hop frame definitions pre-computed and uploaded to the satellite; and

receiving a command transmitted from a ground entity,

wherein switching is in response to receiving the command.

34. A hub-spoke, bent-pipe satellite communications system comprising:

a plurality of terminals;

a plurality of gateways configured to communicate with the plurality of terminals;

a controller configured to:

specify a first weight set and a first beam hop frame definition for a beam hopping frame, the beam hopping frame comprising a plurality of timeslots, the specified first weight set comprising a first plurality of receive weight vectors and a first plurality of transmit weight vectors for generating uplink beam signals and downlink beam signals in timeslots of the beam hopping frame, the specified first beam hop frame definition defining a first plurality of sequential dwell times and a first plurality of pathway gains, each timeslot associated with a dwell time; and

specify a second weight set and a second beam hop frame definition for a beam hopping frame, the specified second weight set comprising a second plurality of receive weight vectors and a second plurality of transmit weight vectors for generating uplink beam signals and downlink beam signals in timeslots of the beam hopping frame, the specified second beam hop frame definition defining a second plurality of sequential dwell times and a second plurality of pathway gains; and

a satellite containing a plurality of pathways, the satellite configured to:

obtain the specified first weight set and the specified first beam hop frame definition for a beam hopping frame;

generate a first plurality of receive weights and a first plurality of transmit weights in accordance with the specified first weight set;

set the first plurality of pathway gains in accordance with the specified first beam hop frame definition;

generate the uplink beam signals and downlink beam signals for pathways using the first plurality of receive weights, the first plurality of pathway gains, and the first plurality of transmit weights in accordance with the first plurality of sequential dwell times defined by the specified first beam hop frame definition;

obtain the specified second weight set and the specified second beam hop frame definition for a beam hopping frame;

generate a second plurality of receive weights and a second plurality of transmit weights in accordance with the specified second weight set;

set the second plurality of pathway gains in accordance with the specified second beam hop frame definition; and

switch generation of the uplink beam signals and downlink beam signals for pathways using the first plurality of receive weights, the first plurality of pathway gains, and the first plurality of transmit weights in accordance with the first plurality of sequential dwell times to generation of the uplink beam signals and downlink beam signals for pathways using the second plurality of receive weights, the second plurality of pathway gains, and the second plurality of transmit weights in accordance with the second plurality of sequential dwell times defined by the specified second beam hop frame definition,

wherein the specified first weight set and the specified first beam hop frame definition support first targets of coverage area and capacity allocation based on a first time-based traffic estimate, and the specified second weight set and the specified second beam hop frame definition support second targets of coverage area and capacity allocation based on a second time-based traffic estimate.

35. The system of claim 34, wherein

the controller is further configured to pre-compute and upload to the satellite for storage a plurality of weight sets, including the first weight set and the second weight set, and a plurality of beam hop frame definitions, including the first beam hop frame definition and the second beam hop frame definition; and

the satellite is configured to switch in response to receiving a command transmitted from a ground entity.

36. A satellite for hub-spoke, bent-pipe satellite communication, the satellite containing a plurality of pathways and comprising:

one or more processors configured to:

obtain a first weight set and a first beam hop frame definition for a beam hopping frame, the beam hopping frame comprising a plurality of timeslots, the specified first weight set comprising a first plurality of receive weight vectors and a first plurality of transmit weight vectors for generating uplink beam signals and downlink beam signals in timeslots of the beam hopping frame, the specified first beam hop frame definition defining a first plurality of sequential dwell times and a first plurality of pathway gains, each timeslot associated with a dwell time;

generate a plurality of receive weights and a plurality of transmit weights in accordance with the specified weight set;

set the plurality of pathway gains in accordance with the specified beam hop frame definition;

obtain a second weight set and a second beam hop frame definition for a beam hopping frame, the specified second weight set comprising a second plurality of receive weight vectors and a second plurality of transmit weight vectors for generating uplink beam signals and downlink beam signals in timeslots of the beam hopping frame, the specified second beam hop frame definition defining a second plurality of sequential dwell times and a second plurality of pathway gains;

generate a second plurality of receive weights and a second plurality of transmit weights in accordance with the specified second weight set; and

set the second plurality of pathway gains in accordance with the specified second beam hop frame definition; and

one or more beam forming networks configured to:

generate the uplink beam signals and downlink beam signals for pathways using the plurality of receive weights, the plurality of pathway gains, and the plurality of transmit weights in accordance with the plurality of sequential dwell times defined by the specified beam hop frame definition; and

switch generation of the uplink beam signals and downlink beam signals for pathways using the first plurality of receive weights, the first plurality of pathway gains, and the first plurality of transmit weights in accordance with the first plurality of sequential dwell times to generation of the uplink beam signals and downlink beam signals for pathways using the second plurality of receive weights, the second plurality of pathway gains, and the second plurality of transmit weights in accordance with the second plurality of sequential dwell times defined by the specified second beam hop frame definition,

wherein the specified first weight set and the specified first beam hop frame definition support first targets of coverage area and capacity allocation based on a first time-

based traffic estimate, and the specified second weight set and the specified second beam hop frame definition support second targets of coverage area and capacity allocation based on a second time-based traffic estimate.

37. The satellite of claim 36, wherein

the one or more processors are further configured to:

receive and store a plurality of weight sets, including the first weight set and the second weight set, and a plurality of beam hop frame definitions, including the first beam hop frame definition and the second beam hop frame definition, the plurality of weight sets and the plurality of beam hop frame definitions pre-computed and uploaded to the satellite; and

receive a command transmitted from a ground entity,

wherein the one or more beam forming networks are configured to switch in response to receipt of the command.

UNITED STATES PATENT AND TRADEMARK OFFICE

UNITED STATES DEPARTMENT OF COMMERCE
United States Patent and Trademark Office
Address: COMMISSIONER FOR PATENTS
P.O. Box 1450
Alexandria, Virginia 22313-1450
www.uspto.gov

APPLICATION NO.	FILING DATE	FIRST NAMED INVENTOR	ATTORNEY DOCKET NO.	CONFIRMATION NO.
13/098,213	04/29/2011	Mark J. Miller	81094-795066 (025130US)	8187

61668 7590 11/01/2011

KILPATRICK TOWNSEND & STOCKTON, LLP/VIASAT
VIASAT, INC. (CLIENT #017018)
TWO EMBARCADERO CENTER
8TH FLOOR
SAN FRANCISCO, CA 94111

EXAMINER	
ART UNIT	PAPER NUMBER
2473	

MAIL DATE	DELIVERY MODE
11/01/2011	PAPER

Please find below and/or attached an Office communication concerning this application or proceeding.

The time period for reply, if any, is set in the attached communication.

UNITED STATES PATENT AND TRADEMARK OFFICE

Commissioner for Patents
United States Patent and Trademark Office
P.O. Box 1450
Alexandria, VA 22313-1450
www.uspto.gov

William T. Ralston
KILPATRICK TOWNSEND &
STOCKTON, LLP/VIASAT
VIASAT, INC. (CLIENT #017018)
TWO EMBARCADERO CENTER
8TH FLOOR
SAN FRANCISCO CA 94111

In re Application of: MILLER, M. J.
Application No. **13098213**
Filed: June 07, 2011
Title of Invention: FLEXIBLE CAPACITY SATELLITE COMMUNICATIONS WITH DYNAMIC DISTRIBUTION AND COVERAGE AREASS

DECISION ON REQUEST TO PARTICIPATE IN PCT-PATENT PROSECUTION HIGHWAY PROGRAM AND PETITION TO MAKE SPECIAL UNDER 37 CFR 1.102(a)

This is a decision on the request to participate in the PCT- Patent Prosecution Highway (PPH) pilot program and the petition under 37 CFR 1.102(a), filed **October 13, 2011**, to make the above-identified application special.

The petition is **GRANTED.**

A grantable request to participate in the PCT PPH program and petition to make special require:

(1) The relationship between the corresponding U.S. application for which participation in the PCT-PPH pilot program is requested and the PCT application satisfies one of the following:

(a) The U.S. application is a national stage entry of the corresponding PCT application.

(b)The U.S. application is a national application which forms the basis for the priority claim in the corresponding PCT application.

(c) The U.S. application is a national stage entry of another PCT application (which can be filed in any competent receiving office) which claims priority to the corresponding PCT application.

(d) The U.S. application is a national application claiming foreign/domestic priority to the corresponding PCT application.

(e) The U.S. application is a continuing application (continuation, divisional, or continuation-in-part) of the U.S. application which satisfies one of the above (a) to (d) scenarios.

(2) The latest work product in the international phase of the PCT application corresponding to the U.S. application indicates at least one claim in the PCT application has novelty, inventive step and industrial applicability. In case any observation is described in Box VIII of the WO/ISA, or WO/IPEA, or IPER which forms the basis for the PCT-PPH request, applicant must identify and explain why the claim(s) is/are not subject to any observation described in Box VIII irrespective of whether an amendment is submitted to correct the observation described in Box VIII.

(3) All the claims in each U.S. application for which a request for participation in the PCT-PPH pilot program is made must sufficiently correspond to one or more of those claims indicated as having novelty, inventive step and industrial applicability and free of any observation described in Box VIII in the latest work product of the corresponding PCT application.

(4) Substantive examination of the U.S. application for which participation in the PCT-PPH pilot program is requested has not begun.

(5) Applicant must submit a copy of the latest international work product which indicated that the claim(s) has/have novelty, inventive step and industrial applicability along with an English translation thereof if the copy of the latest international work product is not in the English language.

(6) Applicant must submit a copy of the claims from the corresponding PCT application which were indicated as having novelty, inventive step and industrial applicability in the latest work product of the PCT application along with an English translation thereof and a statement that the English translation is accurate if the claims are not in the English language. Applicant is required to submit a claims correspondence table in English. The claims correspondence table must indicate how all the claims in the U.S. application sufficiently correspond to the claims indicated as having novelty, inventive step and industrial applicability in the latest international work product.

If the claims in the U.S. application for which participation in the PCT-PPH pilot program is requested are identical to the claims from the corresponding PCT application, and are in the English language, applicant may just indicate such in the PCT-PPH request and it will not be necessary for applicant to submit a copy of the claims from the corresponding PCT application.

(7) Applicant must submit an information disclosure statement (IDS) listing the documents cited in the international work products (ISR, WOIISA, WOIIPEA, PER) of the PCT.

(8) The request for participation in the PCT-PPH pilot program and all the supporting documents must be submitted to the USPTO via EFS-Web and indexed with the following document description: "Petition to make special under PCT-Patent Pros Hwy. Any preliminary amendments and IDS submitted with the PCT-PPH documents must be separately indexed as a preliminary amendment and IDS, respectively.

The request to participate in the PCT-PPH program and petition comply with all the above requirements. Accordingly, the above-identified application has been accorded **"special"** status.

Any inquiry regarding this decision should be directed the undersigned whose telephone number is (571) 272-3902. If attempts to reach the undersigned by telephone are unsuccessful, Hassan Kizou, Quality Assurance Specialist, can be reached at (571) 272-3088.

All other inquiries concerning the examination or status of the application is accessible in the PAIR system at http://www.uspto.gov/ebc/index.html.

The application is being forwarded to the examiner for action on the merits commensurate with this decision.

/Beatriz Prieto/

Beatriz Prieto
Technology Center 2400

UNITED STATES PATENT AND TRADEMARK OFFICE

Commissioner for Patents
United States Patent and Trademark Office
P.O. Box 1450
Alexandria, VA 22313-1450
www.uspto.gov

MAILED

DEC 14 2011

OFFICE OF PETITIONS

AXINN, VELTROP & HARKRIDER LLP
ATTN. MICHAEL A. DAVITZ
114 WEST 47TH STREET
NEW YORK NY 10036

In re Application of :
Durkin et al. :
Application Number: 13/098,234 : LETTER
Filing or 371(c) Date: 04/29/2011 :
Attorney Docket Number: 4074-001 :
:

This is a letter response to the paper filed on October 27, 2011, entitled "REQUEST TO CORRECT ENTITY STATUS UNDER 37 CFR §1.28(C)."

The Office no longer investigates or rejects original or reissue patents under 37 CFR 1.56. **1098 Off. Gaz. Pat. Office 502 (January 3, 1989)**. Therefore, nothing in this Notice is intended to imply that an investigation was done.

It is noted that the person who signed the letter, registered patent practitioner Clifford A. Schlecht, Reg. No. 63,644, is not listed an authorized user of Deposit Account No. 01-3050. Accordingly, the fee deficiency cannot be charged as requested.

A renewed request under 37 CFR 1.28(c), accompanied by payment of the fee deficiency, should be submitted in response to this letter.

This application is no longer entitled to small entity status. Accordingly, all future fees paid in this application must be paid at the large entity rate.

The address in the petition is different than the correspondence address. A courtesy copy of this decision will be mailed to the address in the petition. All future correspondence, however, will be mailed solely to the address of record. A change of correspondence address should be filed if the correspondence address needs to be updated.

Inquiries related to this communication should be directed to the undersigned at (571) 272-3231.

D Wood

Douglas Wood
Attorney
Office of Petitions

Cc: CLIFFORD A. SCHLECHT, PH.D.
AXINN VELTROP & HARKRIDER LLP
90 STATE HOUSE SQUARE
HARTFORD CT 06103

UNITED STATES PATENT AND TRADEMARK OFFICE

Commissioner for Patents
United States Patent and Trademark Office
P.O. Box 1450
Alexandria, VA 22313-1450
www.uspto.gov

AXINN, VELTROP & HARKRIDER LLP
ATTN. MICHAEL A. DAVITZ
114 WEST 47TH STREET
NEW YORK NY 10036

MAILED
FEB 23 2012
OFFICE OF PETITIONS

In re Application of	:	
Durkin et al.	:	
Application Number: 13/098,234	:	NOTICE
Filing or 371(c) Date: 04/29/2011	:	
Attorney Docket Number: 4074-001	:	

This is a notice regarding your REQUEST TO CORRECT ENTITY STATUS UNDER REQUEST TO CORRECT ENTITY STATUS UNDER 37 CFR § 1.28(c), filed on January 4, 2012.

The Office no longer investigates or rejects original or reissue patents under 37 CFR 1.56. **1098 Off. Gaz. Pat. Office 502 (January 3, 1989)**. Therefore, nothing in this Notice is intended to imply that an investigation was done.

Your fee deficiency submission under 37 CFR 1.28 is hereby **ACCEPTED**.

This application is no longer entitled to small entity status. Accordingly, all future fees paid in this application must be paid at the large entity rate.

The address in the petition is different than the correspondence address. A courtesy copy of this decision will be mailed to the address in the petition. All future correspondence, however, will be mailed solely to the address of record. A change of correspondence address should be filed if the correspondence address needs to be updated.

Inquiries related to this communication should be directed to the undersigned at (571) 272-3231.

Douglas Wood
Attorney
Office of Petitions

Cc: AXINN VELTROP & HARKRIDER LLP
90 STATE HOUSE SQ
HARTFORD CT 06103

UNITED STATES PATENT AND TRADEMARK OFFICE

Commissioner for Patents
United States Patent and Trademark Office
P.O. Box 1450
Alexandria, VA 22313-1450
www.uspto.gov

KLEINBERG & LERNER, LLP
1875 CENTURY PARK EAST
SUITE 1150
LOS ANGELES CA 90067

MAILED

OCT 20 2011

OFFICE OF PETITIONS

In re Application of :
Bryan P. Chapman :
Application No. 13/098,321 : DECISION ON PETITION
Filed: April 29, 2011 : TO MAKE SPECIAL UNDER
Attorney Docket No. 377168.22773 : 37 CFR 1.102(c)(1)
:

This is a decision on the petition under 37 CFR 1.102(c)(1), filed October 4, 2011, to make the above-identified application special based on applicant's age as set forth in M.P.E.P. § 708.02, Section IV.

The petition is **GRANTED**.

A grantable petition to make an application special under 37 CFR 1.102(c)(1) and MPEP § 708.02, Section IV: Applicant's Age must be accompanied by evidence showing that at least one of the applicants is 65 years of age, or more, such as a birth certificate or a statement by applicant. No fee is required

The instant petition includes a statement by an attorney on behalf of inventor Brian P. Chapman attesting to his/her age. The above-identified application has been accorded "special" status.

Telephone inquiries concerning this decision should be directed to Kimberly Inabinet at 571-272-4618.

All other inquiries concerning either the examination or status of the application should be directed to the Technology Center.

The application is being forwarded to the Technology Center Art Unit 2876 for action on the merits commensurate with this decision.

/Kimberly Inabinet/

Kimberly Inabinet
Petitions Examiner
Office of Petitions

Doc Code: PPH.PCT.652
Document Description: Petition to make special under PCT-Patent Pros Hwy

PTO/SB/20PCT-KR (06-10)
Approved for use through 01/31/2012. OMB 0651-0058
U.S. Patent and Trademark Office; U. S. DEPARTMENT OF COMMERCE
Under the Paperwork Reduction Act of 1995, no persons are required to respond to a collection of information unless it displays a valid OMB control number.

REQUEST FOR PARTICIPATION IN THE PATENT COOPERATION TREATY - PATENT PROSECUTION HIGHWAY (PCT-PPH) PILOT PROGRAM BETWEEN THE KOREAN INTELLECTUAL PROPERTY OFFICE (KIPO) AND THE USPTO

Application No:	13/098,325	Filing date:	April 29, 2011
First Named Inventor:	Sherwin Hua		
Title of the Invention:	System and Method for Wire-Guided Pedicle Screw Stabilization of Spinal Vertebrae		

THIS REQUEST FOR PARTICIPATION IN THE PCT-PPH PILOT PROGRAM ALONG WITH THE REQUIRED DOCUMENTS MUST BE SUBMITTED VIA EFS-WEB. INFORMATION REGARDING EFS-WEB IS AVAILABLE AT HTTP://WWW.USPTO.GOV/EBC/EFS_HELP.HTML

APPLICANT HEREBY REQUESTS PARTICIPATION IN THE PCT-PPH PROGRAM AND PETITIONS TO MAKE THE ABOVE-IDENTIFIED APPLICATION SPECIAL UNDER THE PCT-PPH PROGRAM.

The above-identified application is (1) a national stage entry of the corresponding PCT application, or (2) a national stage entry of another PCT application which claims priority to the corresponding PCT application, or (3) a national application that claims domestic/ foreign priority to the corresponding PCT application, or (4) a national application which forms the basis for the priority claim in the corresponding PCT application, or (5) a continuing application of a U.S. application that satisfies one of (1) to (4) above, or (6) a U.S. application that claims domestic benefit to a U.S. provisional application which forms the basis for the priority claim in the corresponding PCT application.

The corresponding PCT application number(s) is/are: PCT/US2009/059004

The international filing date of the corresponding PCT application(s) is/are: September 30, 2009

I. List of Required Documents:

a. **A copy of the latest international work product (WO/ISA, WO/IPEA, or IPER) in the above–identified corresponding PCT application(s)**

☑ Is attached.

☐ Is not attached because the document is already in the U.S. application.

b. **A copy of all claims which were indicated as having novelty, inventive step and industrial applicability in the above-identified corresponding PCT application(s).**

☑ Is attached.

☐ Is not attached because the document is already in the U.S. application.

c. **English translations of the documents in a. and b. above are attached (if the documents are not in the English language). A statement that the English translation is accurate is attached for the document in b. above.**

This collection of information is required by 35 U.S.C. 119, 37 CFR 1.55, and 37 CFR 1.102(d). The information is required to obtain or retain a benefit by the public, which is to file (and by the USPTO to process) an application. Confidentiality is governed by 35 U.S.C. 122 and 37 CFR 1.11 and 1.14. This collection is estimated to take 2 hours to complete, including gathering, preparing, and submitting the completed application form to the USPTO. Time will vary depending upon the individual case. Any comments on the amount of time you require to complete this form and/or suggestions for reducing this burden should be sent to the Chief Information Officer, U.S. Patent and Trademark Office, U.S. Department of Commerce, P.O. Box 1450, Alexandria, VA 22313-1450. DO NOT SEND FEES OR COMPLETED FORMS TO THIS ADDRESS.

PTO/SB/20PCT-KR (06-10)
Approved for use through 01/31/2012. OMB 0651-0058
U.S.Patent and Trademark Office; U.S. DEPARTMENT OF COMMERCE
Under the Paperwork Reduction Act of 1995, no persons are required to respond to a collection of information unless it displays a valid OMB control number.

REQUEST FOR PARTICIPATION IN THE PCT-PPH PILOT PROGRAM BETWEEN THE KIPO AND THE USPTO

(continued)

Application No.:	13/098,325
First Named Inventor:	Sherwin Hua

d. **(1) An information disclosure statement listing the documents cited in the international work products (ISR, WO/ISA, WO/IPEA, IPER) of the corresponding PCT application.**

☑ Is attached

☐ Has already been filed in the above-identified U.S. application on _____

(2) Copies of all documents (except) for U.S. patents or U.S. patent application publications)

☑ Are attached.

☐ Have already been filed in the above-identified U.S. application on _____

II. Claims Correspondence Table:

Claims in US Application	Patentable Claims in the corresponding PCT Application	Explanation regarding the correspondence
2	2	Claim 2 incorporates PCT Claims 1 and 2 except for typographical amendment to Claim 2 herein.
3-34	3-34	Claims 3-34 are identical to PCT Claims 3-34 except for typographical amendment to Claims 6 and 9 herein.
35	44	Claim 35 incorporates PCT Claims 43 and 44
36	45	Claim 36 incorporates PCT Claims 43 and 45
37-38	46-47	Claims 37-38 are identical to PCT Claims 46-47.
39	48	Claim 39 incorporates PCT claims 1 and 48

III. All the claims in the US application sufficiently correspond to the patentable claims in the corresponding PCT application.

Signature	Date 2011-07-18
Name (Print/Typed) Sabing Lee	Registration Number 43745

Privacy Act Statement

The **Privacy Act of 1974 (P.L. 93-579)** requires that you be given certain information in connection with your submission of the attached form related to a patent application or patent. Accordingly, pursuant to the requirements of the Act, please be advised that: (1) the general authority for the collection of this information is 35 U.S.C. 2(b)(2); (2) furnishing of the information solicited is voluntary; and (3) the principal purpose for which the information is used by the U.S. Patent and Trademark Office is to process and/or examine your submission related to a patent application or patent. If you do not furnish the requested information, the U.S. Patent and Trademark Office may not be able to process and/or examine your submission, which may result in termination of proceedings or abandonment of the application or expiration of the patent.

The information provided by you in this form will be subject to the following routine uses:

1. The information on this form will be treated confidentially to the extent allowed under the Freedom of Information Act (5 U.S.C. 552) and the Privacy Act (5 U.S.C 552a). Records from this system of records may be disclosed to the Department of Justice to determine whether disclosure of these records is required by the Freedom of Information Act.
2. A record from this system of records may be disclosed, as a routine use, in the course of presenting evidence to a court, magistrate, or administrative tribunal, including disclosures to opposing counsel in the course of settlement negotiations.
3. A record in this system of records may be disclosed, as a routine use, to a Member of Congress submitting a request involving an individual, to whom the record pertains, when the individual has requested assistance from the Member with respect to the subject matter of the record.
4. A record in this system of records may be disclosed, as a routine use, to a contractor of the Agency having need for the information in order to perform a contract. Recipients of information shall be required to comply with the requirements of the Privacy Act of 1974, as amended, pursuant to 5 U.S.C. 552a(m).
5. A record related to an International Application filed under the Patent Cooperation Treaty in this system of records may be disclosed, as a routine use, to the International Bureau of the World Intellectual Property Organization, pursuant to the Patent Cooperation Treaty.
6. A record in this system of records may be disclosed, as a routine use, to another federal agency for purposes of National Security review (35 U.S.C. 181) and for review pursuant to the Atomic Energy Act (42 U.S.C. 218(c)).
7. A record from this system of records may be disclosed, as a routine use, to the Administrator, General Services, or his/her designee, during an inspection of records conducted by GSA as part of that agency's responsibility to recommend improvements in records management practices and programs, under authority of 44 U.S.C. 2904 and 2906. Such disclosure shall be made in accordance with the GSA regulations governing inspection of records for this purpose, and any other relevant (*i.e.*, GSA or Commerce) directive. Such disclosure shall not be used to make determinations about individuals.
8. A record from this system of records may be disclosed, as a routine use, to the public after either publication of the application pursuant to 35 U.S.C. 122(b) or issuance of a patent pursuant to 35 U.S.C. 151. Further, a record may be disclosed, subject to the limitations of 37 CFR 1.14, as a routine use, to the public if the record was filed in an application which became abandoned or in which the proceedings were terminated and which application is referenced by either a published application, an application open to public inspection or an issued patent.
9. A record from this system of records may be disclosed, as a routine use, to a Federal, State, or local law enforcement agency, if the USPTO becomes aware of a violation or potential violation of law or regulation.

UNITED STATES PATENT AND TRADEMARK OFFICE

UNITED STATES DEPARTMENT OF COMMERCE
United States Patent and Trademark Office
Address: COMMISSIONER FOR PATENTS
P.O. Box 1450
Alexandria, Virginia 22313-1450
www.uspto.gov

APPLICATION NO.	FILING DATE	FIRST NAMED INVENTOR	ATTORNEY DOCKET NO.	CONFIRMATION NO.
13/098,325	04/29/2011	Sherwin Hua	SHUA.001C1	8479

20995 7590 07/26/2011
KNOBBE MARTENS OLSON & BEAR LLP
2040 MAIN STREET
FOURTEENTH FLOOR
IRVINE, CA 92614

EXAMINER	
ART UNIT	PAPER NUMBER
3733	

NOTIFICATION DATE	DELIVERY MODE
07/26/2011	ELECTRONIC

Please find below and/or attached an Office communication concerning this application or proceeding.

The time period for reply, if any, is set in the attached communication.

Notice of the Office communication was sent electronically on above-indicated "Notification Date" to the following e-mail address(es):

jcartee@kmob.com
efiling@kmob.com
eOAPilot@kmob.com

UNITED STATES PATENT AND TRADEMARK OFFICE

Commissioner for Patents
United States Patent and Trademark Office
P.O. Box 1450
Alexandria, VA 22313-1450
www.uspto.gov

KNOBBE MARTENS OLSON & BEAR LLP
2040 MAIN STREET
FOURTEENTH FLOOR
IRVINE CA 92614

In re Application of:
HUA, SHERWIN
Serial No.: 13/098325
Filed: 04/29/2011
Attorney Docket No. : SHUA.001C1
Title: SYSTEM AND METHOD FOR WIRE-GUIDED PEDICLE SCREW STABILIZATION OF SPINAL VERTEBRAE

DECISION ON A REQUEST TO PARTICIPATE IN PATENT PCT/PROSECUTION HIGHWAY PROGRAM AND PETITION TO MAKE SPECIAL UNDER CFR 1.102(a)

This is a decision on the request to participate in the Patent Prosecution Highway (PPH) program and the petition under 37 CFR 1.102(a), filed July 18, 2011 to make the above-identified application special.

The request and petition are **dismissed**.

A grantable request to participate in the PPH pilot program and petition to make special require:

(1) The U.S. application must validly claim priority under 35 U.S.C. 119(a) to one or more PCT applications filed in the IPAU, JPO, EPO, KIPO, or USPTO;
(2) Applicant must submit a copy of the allowable/patentable claim(s) from the PCT application(s) latest international work product (the written opinion or the IPER) along with an English translation thereof and a statement that the English translation is accurate;
(3) All the claims in the U.S. application must sufficiently correspond or be amended to sufficiently correspond to the allowable/patentable claim(s) in the PCT application(s);
(4) Examination of the U.S. application has not begun;
(5) Applicant must submit a copy of the latest international work product from the PCT application containing the allowable/patentable claim(s) along with an English translation thereof and a statement that the English translation is accurate; and
(6) Applicant must submit an IDS listing the documents cited by the PCT examiner in the international work product along with copies of documents except U.S. patents or U.S. patent application publications.

The request to participate in the PPH program and petition met all conditions except Item #2. The request to participate in the PPH program and petition failed to include a copy of the PCT allowed claims. A certified English translation of the allowed claims is not on record. Even assuming the applicant is correct in asserting that the U.S. application claims are identical to the allowable PCT claims (which will satisfy Item #3), the applicant still needs to submit a copy of the allowable claims from the PCT application for review.

The applicant is encouraged to cite and submit all relevant prior art references, if any, to facilitate examination in this application.

Response must be filed via EFS-Web. Telephone inquiries concerning this decision should be directed to Henry C. Yuen, at 571-272-4856.

Petition is **dismissed**.

/Henry C. Yuen/

Henry C. Yuen
Special Programs Examiner
Technology Center 3700
Tel: 571-272-4856

SHUA.001C1 PATENT

IN THE UNITED STATES PATENT AND TRADEMARK OFFICE

Applicant	:	Sherwin Hua
App. No	:	13/098,325
Filed	:	April 29, 2011
For		SYSTEM AND METHOD FOR WIRE-GUIDED PEDICLE SCREW STABILIZATION OF SPINAL VERTEBRAE
Examiner	:	Unknown
Art Unit	:	3733
Conf. No		8479

RESPONSE TO DECISION ON A REQUEST TO PARTICIPATE IN PATENT PCT/PROSECUTION HIGHWAY PROGRAM AND PETITION TO MAKE SPECIAL

Commissioner for Patents
P.O. Box 1450
Alexandria, VA 22313-1450

Dear Sir:

In response to the Decision mailed July 26, 2011, Applicant's representative spoke with Henry C. Yuen on July 28, 2011. Mr. Yuen's further review of the PPH filing on July 18, 2011 confirmed that the allowable/patentable claims from the PCT application were in fact included with the filing. Applicant therefore respectfully requests that the request to participate in the PPH Program be granted.

Respectfully submitted,

KNOBBE, MARTENS, OLSON & BEAR, LLP

Dated: 7-28-2011

By: _____
Sabing ~~H.~~ Lee
Registration No. ~~43,745~~
Attorney of Record
Customer No. 20,995
(949) 760-0404

11657590
072811

UNITED STATES PATENT AND TRADEMARK OFFICE

UNITED STATES DEPARTMENT OF COMMERCE
United States Patent and Trademark Office
Address: COMMISSIONER FOR PATENTS
P.O. Box 1450
Alexandria, Virginia 22313-1450
www.uspto.gov

APPLICATION NO.	FILING DATE	FIRST NAMED INVENTOR	ATTORNEY DOCKET NO.	CONFIRMATION NO.
13/098,325	04/29/2011	Sherwin Hua	SHUA.001C1	8479

20995 7590 09/26/2011

KNOBBE MARTENS OLSON & BEAR LLP
2040 MAIN STREET
FOURTEENTH FLOOR
IRVINE, CA 92614

EXAMINER	
ART UNIT	PAPER NUMBER
3775	

NOTIFICATION DATE	DELIVERY MODE
09/26/2011	ELECTRONIC

Please find below and/or attached an Office communication concerning this application or proceeding.

The time period for reply, if any, is set in the attached communication.

Notice of the Office communication was sent electronically on above-indicated "Notification Date" to the following e-mail address(es):

jcartee@kmob.com
efiling@kmob.com
eOAPilot@kmob.com

UNITED STATES PATENT AND TRADEMARK OFFICE

Commissioner for Patents
United States Patent and Trademark Office
P.O. Box 1450
Alexandria, VA 22313-1450
www.uspto.gov

KNOBBE MARTENS OLSON & BEAR LLP
2040 MAIN STREET
FOURTEENTH FLOOR
IRVINE CA 92614

In re Application of:
HUA, SHERWIN
Serial No.: 13/098325
Filed: April 29, 2011
Attorney Docket No. : SHUA.001C1
Title: SYSTEM AND METHOD FOR WIRE-GUIDED PEDICLE SCREW STABILIZATION OF SPINAL VERTEBRAE

: DECISION ON A REQUEST TO PARTICIPATE IN PCT/PATENT PROSECUTION HIGHWAY PROGRAM AND PETITION TO MAKE SPECIAL UNDER CFR 1.102(a)

This is a decision on the request to participate in the Patent Prosecution Highway (PPH) program and the petition under 37 CFR 1.102(a), filed July 28, 2011 to make the above-identified application special.

The request and petition are **granted.**

A grantable request to participate in the PPH pilot program and petition to make special require:

(1) The U.S. application must validly claim priority under 35 U.S.C. 119(a) to one or more PCT applications filed in the JPO, EPO, KIPO, or USPTO;
(2) Applicant must submit a copy of the allowable/patentable claim(s) from the PCT application(s) latest international work product (the written opinion or the IPER) along with an English translation thereof and a statement that the English translation is accurate;
(3) All the claims in the U.S. application must sufficiently correspond or be amended to sufficiently correspond to the allowable/patentable claim(s) in the PCT application(s);
(4) Examination of the U.S. application has not begun;
(5) Applicant must submit a copy of the latest international work product from the PCT application containing the allowable/patentable claim(s) along with an English translation thereof and a statement that the English translation is accurate; and
(6) Applicant must submit an IDS listing the documents cited by the PCT examiner in the international work product along with copies of documents except U.S. patents or U.S. patent application publications.

In light of the petition being properly submitted, the request to participate in the PPH program and the petition comply with the above requirements. Accordingly, the above-identified application has been accorded "special" status.

The applicant is encouraged to cite and submit all relevant prior art references, if any, to facilitate examination in this application.

Response must be filed via EFS-Web. Telephone inquiries concerning this decision should be directed to Henry C. Yuen, at 571-272-4856.

Petition is **granted**.

/Henry C. Yuen/

Henry C. Yuen
Special Programs Examiner
Technology Center 3700
Tel: 571-272-4856

Doc Code: PPH.PCT.652
Document Description: Petition to make special under PCT-Patent Pros Hwy

PTO/SB/20PCT-US (09-10)
Approved for use through 01/31/2012. OMB 0651-0058
U.S. Patent and Trademark Office; U. S. DEPARTMENT OF COMMERCE
Under the Paperwork Reduction Act of 1995, no persons are required to respond to a collection of information unless it displays a valid OMB control number.

REQUEST FOR PARTICIPATION IN THE PATENT COOPERATION TREATY - PATENT PROSECUTION HIGHWAY (PCT-PPH) PILOT PROGRAM IN A U.S. APPLICATION WHERE THE USPTO WAS THE ISA OR IPEA

Application No:	13/098,334	Filing date:	04/29/2011
First Named Inventor:	Mark J. Miller		
Title of the Invention:	Flexible Capacity Satellite Communications System With Flexible Allocation Between Forward And Return Capacity		

THIS REQUEST FOR PARTICIPATION IN THE PCT-PPH PILOT PROGRAM ALONG WITH THE REQUIRED DOCUMENTS MUST BE SUBMITTED VIA EFS-WEB. INFORMATION REGARDING EFS-WEB IS AVAILABLE AT HTTP://WWW.USPTO.GOV/EBC/EFS_HELP.HTML

APPLICANT HEREBY REQUESTS PARTICIPATION IN THE PCT-PPH PROGRAM AND PETITIONS TO MAKE THE ABOVE-IDENTIFIED APPLICATION SPECIAL UNDER THE PCT-PPH PROGRAM.

The above-identified application is (1) a national stage entry of the corresponding PCT application, or (2) a national stage entry of another PCT application which claims priority to the corresponding PCT application, or (3) a national application that claims domestic/ foreign priority to the corresponding PCT application, or (4) a national application which forms the basis for the priority claim in the corresponding PCT application, or (5) a continuing application of a U.S. application that satisfies one of (1) to (4) above, or (6) a U.S. application that claims domestic benefit to a U.S. provisional application which forms the basis for the priority claim in the corresponding PCT application.

PCT/US11/34845

The corresponding PCT application number(s) is/are:

The international date of the corresponding PCT application(s) is/are:

05/02/2011

I. List of Required Documents:

a. **A copy of the latest international work product (WO/ISA, WO/IPEA, or IPER) in the above–identified corresponding PCT application(s)**

☒ Is attached

☐ Is not attached because the document is already in the U.S. application.

b. **A copy of all claims which were indicated as having novelty, inventive step and industrial applicability in the above-identified corresponding PCT application(s).**

☒ Is attached.

☐ Is not attached because the document is already in the U.S. application.

c. **English translations of the documents in a. and b. above are attached (if the documents are not in the English language). A statement that the English translation is accurate is attached for the document in b. above.**

This collection of information is required by 35 U.S.C. 119, 37 CFR 1.55, and 37 CFR 1.102(d). The information is required to obtain or retain a benefit by the public, which is to file (and by the USPTO to process) an application. Confidentiality is governed by 35 U.S.C. 122 and 37 CFR 1.11 and 1.14. This collection is estimated to take 2 hours to complete, including gathering, preparing, and submitting the completed application form to the USPTO. Time will vary depending upon the individual case. Any comments on the amount of time you require to complete this form and/or suggestions for reducing this burden should be sent to the Chief Information Officer, U.S. Patent and Trademark Office, U.S. Department of Commerce, P.O. Box 1450, Alexandria, VA 22313-1450. DO NOT SEND FEES OR COMPLETED FORMS TO THIS ADDRESS.

PTO/SB/20PCT-US (09-10)
Approved for use through 01/31/2012. OMB 0651-0058
U.S.Patent and Trademark Office; U.S. DEPARTMENT OF COMMERCE
Under the Paperwork Reduction Act of 1995, no persons are required to respond to a collection of information unless it displays a valid OMB control number.

REQUEST FOR PARTICIPATION IN THE PCT-PPH PILOT PROGRAM IN A U.S. APPLICATION WHERE THE USPTO WAS THE ISA OR IPEA (continued)

Application No.:	13/098,334
First Named Inventor:	Mark J. Miller

d. **(1) An information disclosure statement listing the documents cited in the international work products (ISR, WO/ISA, WO/IPEA, IPER) of the corresponding PCT application.**

☒ Is attached

☐ Has already been filed in the above-identified U.S. application on _____

(2) Copies of all documents (except) for U.S. patents or U.S. patent application publications)

☒ Are attached.

☐ Have already been filed in the above-identified U.S. application on _____

II. Claims Correspondence Table:

Claims in US Application	Patentable Claims in the corresponding PCT Application	Explanation regarding the correspondence
1-29	1-29	Claims are exactly the same

III. All the claims in the US application sufficiently correspond to the patentable claims in the corresponding PCT application.

Signature /Dr. William T. Ralston #55,561/	Date 10/13/2011
Name (Print/Typed) William Ralston	Registration Number 55561

Privacy Act Statement

The **Privacy Act of 1974 (P.L. 93-579)** requires that you be given certain information in connection with your submission of the attached form related to a patent application or patent. Accordingly, pursuant to the requirements of the Act, please be advised that: (1) the general authority for the collection of this information is 35 U.S.C. 2(b)(2); (2) furnishing of the information solicited is voluntary; and (3) the principal purpose for which the information is used by the U.S. Patent and Trademark Office is to process and/or examine your submission related to a patent application or patent. If you do not furnish the requested information, the U.S. Patent and Trademark Office may not be able to process and/or examine your submission, which may result in termination of proceedings or abandonment of the application or expiration of the patent.

The information provided by you in this form will be subject to the following routine uses:

1. The information on this form will be treated confidentially to the extent allowed under the Freedom of Information Act (5 U.S.C. 552) and the Privacy Act (5 U.S.C 552a). Records from this system of records may be disclosed to the Department of Justice to determine whether disclosure of these records is required by the Freedom of Information Act.
2. A record from this system of records may be disclosed, as a routine use, in the course of presenting evidence to a court, magistrate, or administrative tribunal, including disclosures to opposing counsel in the course of settlement negotiations.
3. A record in this system of records may be disclosed, as a routine use, to a Member of Congress submitting a request involving an individual, to whom the record pertains, when the individual has requested assistance from the Member with respect to the subject matter of the record.
4. A record in this system of records may be disclosed, as a routine use, to a contractor of the Agency having need for the information in order to perform a contract. Recipients of information shall be required to comply with the requirements of the Privacy Act of 1974, as amended, pursuant to 5 U.S.C. 552a(m).
5. A record related to an International Application filed under the Patent Cooperation Treaty in this system of records may be disclosed, as a routine use, to the International Bureau of the World Intellectual Property Organization, pursuant to the Patent Cooperation Treaty.
6. A record in this system of records may be disclosed, as a routine use, to another federal agency for purposes of National Security review (35 U.S.C. 181) and for review pursuant to the Atomic Energy Act (42 U.S.C. 218(c)).
7. A record from this system of records may be disclosed, as a routine use, to the Administrator, General Services, or his/her designee, during an inspection of records conducted by GSA as part of that agency's responsibility to recommend improvements in records management practices and programs, under authority of 44 U.S.C. 2904 and 2906. Such disclosure shall be made in accordance with the GSA regulations governing inspection of records for this purpose, and any other relevant (*i.e.*, GSA or Commerce) directive. Such disclosure shall not be used to make determinations about individuals.
8. A record from this system of records may be disclosed, as a routine use, to the public after either publication of the application pursuant to 35 U.S.C. 122(b) or issuance of a patent pursuant to 35 U.S.C. 151. Further, a record may be disclosed, subject to the limitations of 37 CFR 1.14, as a routine use, to the public if the record was filed in an application which became abandoned or in which the proceedings were terminated and which application is referenced by either a published application, an application open to public inspection or an issued patent.
9. A record from this system of records may be disclosed, as a routine use, to a Federal, State, or local law enforcement agency, if the USPTO becomes aware of a violation or potential violation of law or regulation.

PATENT COOPERATION TREATY

From the INTERNATIONAL SEARCHING AUTHORITY

To: MYMY HENDERSON
KILPATRICK TOWNSEND & STOCKTON LLP
TWO EMBARCADERO CENTER, 8TH FLOOR
SAN FRANCISCO, CA 94111-3834

PCT

NOTIFICATION OF TRANSMITTAL OF THE INTERNATIONAL SEARCH REPORT AND THE WRITTEN OPINION OF THE INTERNATIONAL SEARCHING AUTHORITY, OR THE DECLARATION

(PCT Rule 44.1)

	Date of mailing *(day/month/year)* 26 AUG 2011
Applicant's or agent's file reference 81094-805718	**FOR FURTHER ACTION** See paragraphs 1 and 4 below
International application No. PCT/US2011/034845	International filing date *(day/month/year)* 02 May 2011
Applicant VIASAT, INC	

1. ☒ The applicant is hereby notified that the international search report and the written opinion of the International Searching Authority have been established and are transmitted herewith.

   Filing of amendments and statement under Article 19:
   The applicant is entitled, if he so wishes, to amend the claims of the international application (see Rule 46):

   When? The time limit for filing such amendments is normally two months from the date of transmittal of the international search report.

   Where? Directly to the International Bureau of WIPO, 34 chemin des Colombettes 1211 Geneva 20, Switzerland, Facsimile No.: +41 22 338 82 70

   For more detailed instructions, see *PCT Applicant's Guide*, International Phase, paragraphs 9.004 – 9.011.

2. ☐ The applicant is hereby notified that no international search report will be established and that the declaration under Article 17(2)(a) to that effect and the written opinion of the International Searching Authority are transmitted herewith.

3. ☐ **With regard to any protest** against payment of (an) additional fee(s) under Rule 40.2, the applicant is notified that:

   ☐ the protest together with the decision thereon has been transmitted to the International Bureau together with any request to forward the texts of both the protest and the decision thereon to the designated Offices.

   ☐ no decision has been made yet on the protest; the applicant will be notified as soon as a decision is made.

4. **Reminders**

   The applicant may submit comments on an informal basis on the written opinion of the International Searching Authority to the International Bureau. The International Bureau will send a copy of such comments to all designated Offices unless an international preliminary examination report has been or is to be established. Following the expiration of 30 months from the priority date, these comments will also be made available to the public.

   Shortly after the expiration of **18 months** from the priority date, the international application will be published by the International Bureau. If the applicant wishes to avoid or postpone publication, a notice of withdrawal of the international application, or of the priority claim, must reach the International Bureau before the completion of the technical preparations for international publication (Rules 90*bis*.1 and 90*bis*.3).

   Within **19 months** from the priority date, but only in respect of some designated Offices, a demand for international preliminary examination must be filed if the applicant wishes to postpone the entry into the national phase **until 30 months** from the priority date (in some Offices even later); otherwise, the applicant must, **within 20 months** from the priority date, perform the prescribed acts for entry into the national phase before those designated Offices.

   In respect of other designated Offices, the time limit of **30 months** (or later) will apply even if no demand is filed within 19 months.

   For details about the applicable time limits, Office by Office, see www.wipo.int/pct/en/texts/time_limits.html and the *PCT Applicant's Guide*, National Chapters.

Name and mailing address of the ISA/ Mail Stop PCT, Attn: ISA/US Commissioner for Patents P.O. Box 1450, Alexandria, Virginia 22313-1450 Facsimile No. 571-273-3201	Authorized officer Blaine R. Copenheaver PCT Helpdesk: 571-272-4300 Telephone No. PCT OSP: 571-272-7774

Form PCT/ISA/220 (July 2010)

PATENT COOPERATION TREATY

From the INTERNATIONAL SEARCHING AUTHORITY

To: MYMY HENDERSON
KILPATRICK TOWNSEND & STOCKTON LLP
TWO EMBARCADERO CENTER, 8TH FLOOR
SAN FRANCISCO, CA 94111-3834

PCT

NOTIFICATION OF TRANSMITTAL OF THE INTERNATIONAL SEARCH REPORT AND THE WRITTEN OPINION OF THE INTERNATIONAL SEARCHING AUTHORITY, OR THE DECLARATION

(PCT Rule 44.1)

	Date of mailing *(day/month/year)* 26 AUG 2011
Applicant's or agent's file reference 81094-805718	**FOR FURTHER ACTION** See paragraphs 1 and 4 below
International application No. PCT/US2011/034845	International filing date *(day/month/year)* 02 May 2011
Applicant VIASAT, INC	

1. ☒ The applicant is hereby notified that the international search report and the written opinion of the International Searching Authority have been established and are transmitted herewith.

   Filing of amendments and statement under Article 19:
   The applicant is entitled, if he so wishes, to amend the claims of the international application (see Rule 46):

   When? The time limit for filing such amendments is normally two months from the date of transmittal of the international search report.

   Where? Directly to the International Bureau of WIPO, 34 chemin des Colombettes 1211 Geneva 20, Switzerland, Facsimile No.: +41 22 338 82 70

   For more detailed instructions, see *PCT Applicant's Guide*, International Phase, paragraphs 9.004 – 9.011.

2. ☐ The applicant is hereby notified that no international search report will be established and that the declaration under Article 17(2)(a) to that effect and the written opinion of the International Searching Authority are transmitted herewith.

3. ☐ **With regard to any protest** against payment of (an) additional fee(s) under Rule 40.2, the applicant is notified that:

   ☐ the protest together with the decision thereon has been transmitted to the International Bureau together with any request to forward the texts of both the protest and the decision thereon to the designated Offices.

   ☐ no decision has been made yet on the protest; the applicant will be notified as soon as a decision is made.

4. **Reminders**

   The applicant may submit comments on an informal basis on the written opinion of the International Searching Authority to the International Bureau. The International Bureau will send a copy of such comments to all designated Offices unless an international preliminary examination report has been or is to be established. Following the expiration of 30 months from the priority date, these comments will also be made available to the public.

   Shortly after the expiration of **18 months** from the priority date, the international application will be published by the International Bureau. If the applicant wishes to avoid or postpone publication, a notice of withdrawal of the international application, or of the priority claim, must reach the International Bureau before the completion of the technical preparations for international publication (Rules 90*bis*.1 and 90*bis*.3).

   Within **19 months** from the priority date, but only in respect of some designated Offices, a demand for international preliminary examination must be filed if the applicant wishes to postpone the entry into the national phase **until 30 months** from the priority date (in some Offices even later); otherwise, the applicant must, **within 20 months** from the priority date, perform the prescribed acts for entry into the national phase before those designated Offices.

   In respect of other designated Offices, the time limit of **30 months** (or later) will apply even if no demand is filed within 19 months.

   For details about the applicable time limits, Office by Office, see www.wipo.int/pct/en/texts/time_limits.html and the *PCT Applicant's Guide*, National Chapters.

Name and mailing address of the ISA/ Mail Stop PCT, Attn: ISA/US Commissioner for Patents P.O. Box 1450, Alexandria, Virginia 22313-1450 Facsimile No. 571-273-3201	Authorized officer Blaine R. Copenheaver PCT Helpdesk: 571-272-4300 Telephone No. PCT OSP: 571-272-7774

Form PCT/ISA/220 (July 2010)

PATENT COOPERATION TREATY

PCT

INTERNATIONAL SEARCH REPORT

(PCT Article 18 and Rules 43 and 44)

Applicant's or agent's file reference 81094-805718	**FOR FURTHER ACTION**	see Form PCT/ISA/220 as well as, where applicable, item 5 below.
International application No. PCT/US2011/034845	International filing date *(day/month/year)* 02 May 2011	(Earliest) Priority Date *(day/month/year)* 02 May 2010
Applicant VIASAT, INC		

This international search report has been prepared by this International Searching Authority and is transmitted to the applicant according to Article 18. A copy is being transmitted to the International Bureau.

This international search report consists of a total of 9 sheets.

☐ It is also accompanied by a copy of each prior art document cited in this report.

1. **Basis of the report**

   a. With regard to the **language**, the international search was carried out on the basis of:

   ☒ the international application in the language in which it was filed.

   ☐ a translation of the international application into _____ which is the language of a translation furnished for the purposes of international search (Rules 12.3(a) and 23.1(b)).

   b. ☐ This international search report has been established taking into account the **rectification of an obvious mistake** authorized by or notified to this Authority under Rule 91 (Rule 43.6*bis*(a)).

   c. ☐ With regard to any **nucleotide and/or amino acid sequence** disclosed in the international application, see Box No. I.

2. ☐ **Certain claims were found unsearchable** (see Box No. II).

3. ☐ **Unity of invention is lacking** (see Box No. III).

4. With regard to the **title**,

   ☒ the text is approved as submitted by the applicant.

   ☐ the text has been established by this Authority to read as follows:

5. With regard to the **abstract**,

   ☒ the text is approved as submitted by the applicant.

   ☐ the text has been established, according to Rule 38.2, by this Authority as it appears in Box No. IV. The applicant may, within one month from the date of mailing of this international search report, submit comments to this Authority.

6. With regard to the **drawings**,

   a. the figure of the **drawings** to be published with the abstract is Figure No. 4

   ☒ as suggested by the applicant.

   ☐ as selected by this Authority, because the applicant failed to suggest a figure.

   ☐ as selected by this Authority, because this figure better characterizes the invention.

   b. ☐ none of the figures is to be published with the abstract.

INTERNATIONAL SEARCH REPORT

International application No.
PCT/US2011/034845

A. CLASSIFICATION OF SUBJECT MATTER
IPC(8) - H04B 7/185 (2011.01)
USPC - 455/12.1
According to International Patent Classification (IPC) or to both national classification and IPC

B. FIELDS SEARCHED

Minimum documentation searched (classification system followed by classification symbols)
IPC(8) - H04B 7/14, 185, 19, 195; 10/00, 105; H04L 5/00; H04Q 7/00; H04W 16/00, 40/00 (2011.01)
USPC - 342/352, 358; 370/230, 316, 328, 330, 347; 375/132, 138; 455/12.1, 13.1, 73, 427, 428, 429

Documentation searched other than minimum documentation to the extent that such documents are included in the fields searched

Electronic data base consulted during the international search (name of data base and, where practicable, search terms used)
PatBase, Google Patent, Google Scholar, EBSCO

C. DOCUMENTS CONSIDERED TO BE RELEVANT

Category*	Citation of document, with indication, where appropriate, of the relevant passages	Relevant to claim No.
A	US 6,522,643 B1 (JACOMB-HOOD et al) 18 February 2003 (18.02.2003) entire document	1-37
A	US 2002/0159403 A1 (REDDY) 31 October 2002 (31.10.2002) entire document	1-37
A	US 2007/0135051 A1 (ZHENG et al) 14 June 2007 (14.06.2007) entire document	1-37
A	TORLAK et al. Fast Estimation of Weight Vectors to Optimize Multi-Transmitter Broadcast Channel Capacity. IEEE Transactions on Signal Processing, Volume 46, No. 1 January 1998 retrieved from the internet on [15 August 2011] entire document <URL: http://danube.ee.washington.edu/downloadable/hliu/00651228.pdf>	1-37
A	WO 98/32245 (TUCK) 23 July 1998 (23.07.1998) entire document	1-37

☐ Further documents are listed in the continuation of Box C. ☐

* Special categories of cited documents:
"A" document defining the general state of the art which is not considered to be of particular relevance
"E" earlier application or patent but published on or after the international filing date
"L" document which may throw doubts on priority claim(s) or which is cited to establish the publication date of another citation or other special reason (as specified)
"O" document referring to an oral disclosure, use, exhibition or other means
"P" document published prior to the international filing date but later than the priority date claimed
"T" later document published after the international filing date or priority date and not in conflict with the application but cited to understand the principle or theory underlying the invention
"X" document of particular relevance; the claimed invention cannot be considered novel or cannot be considered to involve an inventive step when the document is taken alone
"Y" document of particular relevance; the claimed invention cannot be considered to involve an inventive step when the document is combined with one or more other such documents, such combination being obvious to a person skilled in the art
"&" document member of the same patent family

Date of the actual completion of the international search	Date of mailing of the international search report
16 August 2011	26 AUG 2011
Name and mailing address of the ISA/US Mail Stop PCT, Attn: ISA/US, Commissioner for Patents P.O. Box 1450, Alexandria, Virginia 22313-1450 Facsimile No. 571-273-3201	Authorized officer: Blaine R. Copenheaver PCT Helpdesk: 571-272-4300 PCT OSP: 571-272-7774

Form PCT/ISA/210 (second sheet) (July 2009)

PATENT COOPERATION TREATY

From the
INTERNATIONAL SEARCHING AUTHORITY

To: MYMY HENDERSON
KILPATRICK TOWNSEND & STOCKTON LLP
TWO EMBARCADERO CENTER, 8TH FLOOR
SAN FRANCISCO, CA 94111-3834

PCT

WRITTEN OPINION OF THE
INTERNATIONAL SEARCHING AUTHORITY

(PCT Rule 43*bis*.1)

Date of mailing *(day/month/year)*	26 AUG 2011

Applicant's or agent's file reference	FOR FURTHER ACTION
81094-805718	See paragraph 2 below

International application No.	International filing date *(day/month/year)*	Priority date *(day/month/year)*
PCT/US2011/034845	02 May 2011	02 May 2010

International Patent Classification (IPC) or both national classification and IPC
IPC(8) - H04B 7/185 (2011.01)
USPC - 455/12.1

Applicant VIASAT, INC

1. This opinion contains indications relating to the following items:

- ☒ Box No. I Basis of the opinion
- ☐ Box No. II Priority
- ☐ Box No. III Non-establishment of opinion with regard to novelty, inventive step and industrial applicability
- ☐ Box No. IV Lack of unity of invention
- ☒ Box No. V Reasoned statement under Rule 43*bis*.1(a)(i) with regard to novelty, inventive step or industrial applicability; citations and explanations supporting such statement
- ☐ Box No. VI Certain documents cited
- ☐ Box No. VII Certain defects in the international application
- ☐ Box No. VIII Certain observations on the international application

2. **FURTHER ACTION**

If a demand for international preliminary examination is made, this opinion will be considered to be a written opinion of the International Preliminary Examining Authority ("IPEA") except that this does not apply where the applicant chooses an Authority other than this one to be the IPEA and the chosen IPEA has notified the International Bureau under Rule 66.1*bis*(b) that written opinions of this International Searching Authority will not be so considered.

If this opinion is, as provided above, considered to be a written opinion of the IPEA, the applicant is invited to submit to the IPEA a written reply together, where appropriate, with amendments, before the expiration of 3 months from the date of mailing of Form PCT/ISA/220 or before the expiration of 22 months from the priority date, whichever expires later.

For further options, see Form PCT/ISA/220.

Name and mailing address of the ISA/US	Date of completion of this opinion	Authorized officer:
Mail Stop PCT, Attn: ISA/US Commissioner for Patents P.O. Box 1450, Alexandria, Virginia 22313-1450 Facsimile No. 571-273-3201	16 August 2011	Blaine R. Copenheaver PCT Helpdesk: 571-272-4300 PCT OSP: 571-272-7774

Form PCT/ISA/237 (cover sheet) (July 2011)

WRITTEN OPINION OF THE INTERNATIONAL SEARCHING AUTHORITY

International application No.
PCT/US2011/034845

Box No. I Basis of this opinion

1. With regard to the **language**, this opinion has been established on the basis of:

   ☒ the international application in the language in which it was filed.

   ☐ a translation of the international application into _____ which is the language of a translation furnished for the purposes of international search (Rules 12.3(a) and 23.1(b)).

2. ☐ This opinion has been established taking into account the **rectification of an obvious mistake** authorized by or notified to this Authority under Rule 91 (Rule 43*bis*.1(a))

3. With regard to any **nucleotide and/or amino acid sequence** disclosed in the international application, this opinion has been established on the basis of a sequence listing filed or furnished:

   a. (means)

      ☐ on paper

      ☐ in electronic form

   b. (time)

      ☐ in the international application as filed

      ☐ together with the international application in electronic form

      ☐ subsequently to this Authority for the purposes of search

4. ☐ In addition, in the case that more than one version or copy of a sequence listing has been filed or furnished, the required statements that the information in the subsequent or additional copies is identical to that in the application as filed or does not go beyond the application as filed, as appropriate, were furnished.

5. Additional comments:

WRITTEN OPINION OF THE INTERNATIONAL SEARCHING AUTHORITY

International application No.
PCT/US2011/034845

Box No. V **Reasoned statement under Rule 43*bis*.1(a)(i) with regard to novelty, inventive step or industrial applicability; citations and explanations supporting such statement**

1. Statement

Novelty (N)	Claims	1-37	YES
	Claims	None	NO
Inventive step (IS)	Claims	1-37	YES
	Claims	None	NO
Industrial applicability (IA)	Claims	1-37	YES
	Claims	None	NO

2. Citations and explanations:

Claims 1-37 meet the criteria set out in PCT Article 33(2)-(3), because the prior art does not teach or fairly suggest:

Regarding claims 1, 8, 15 and 23 the features of specifying a weight set and a beam hop frame definition for a beam hopping frame, the beam hopping frame comprising a plurality of timeslots, the specified weight set comprising a plurality of receive weight vectors and a plurality of transmit weight vectors for generating uplink beam signals and downlink beam signals in timeslots of the beam hopping frame, the specified beam hop frame definition defining a plurality of sequential dwell times and a plurality of pathway gains, each timeslot associated with a dwell time; and operating the satellite to generate the uplink beam signals and downlink beam signals for pathways in accordance with the specified weight set and the specified beam hop frame definition, wherein the specified weight set and the specified beam hop frame definition support an allocation of capacity between forward traffic, from at least one gateway to a plurality of terminals, and return traffic, from a plurality of terminals to at least one gateway.

Regarding claims 30, 32, 34 and 36 the features of specifying a first weight set and a first beam hop frame definition for a beam hopping frame, the beam hopping frame comprising a plurality of timeslots, the specified first weight set comprising a first plurality of receive weight vectors and a first plurality of transmit weight vectors for generating uplink beam signals and downlink beam signals in timeslots of the beam hopping frame, the specified first beam hop frame definition defining a first plurality of sequential dwell times and a first plurality of pathway gains, each timeslot associated with a dwell time; operating the satellite to generate the uplink beam signals and downlink beam signals for pathways in accordance with the specified first weight set and the specified first beam hop frame definition; specifying a second weight set and a second beam hop frame definition for a beam hopping frame, the specified second weight set comprising a second plurality of receive weight vectors and a second plurality of transmit weight vectors for generating uplink beam signals and downlink beam signals in timeslots of the beam hopping frame, the specified second beam hop frame definition defining a second plurality of sequential dwell times and a second plurality of pathway gains; and switching from operation of the satellite in accordance with the specified first weight set and the specified first beam hop frame definition to operation of the satellite to generate the uplink beam signals and downlink beam signals for pathways in accordance with the specified second weight set and the specified second beam hop frame definition, wherein the specified first weight set and the specified first beam hop frame definition support first targets of coverage area and capacity allocation based on a first time based traffic estimate, and the specified second weight set and the specified second beam hop frame definition support second targets of coverage area and capacity allocation based on a second time-based traffic estimate.

The prior art teaches some of the concepts and/or aspects of the claim limitations as shown below, but does not teach the claim limitations in their entirety and as specifically recited in the each claim:

Jacomb-Hood et al. (US 6,522,643 B1) is in the field of beam-hopping satellite communications (title, abstract) and further teaches allocating time slots for cells based on dwell times (paragraphs 9-13), a multiple beam satellite system (figure 1 and paragraph 32), and the use of steering vectors (paragraph 34).
Reddy (US 2002/0159403 A1) is in the field of spot beam hopping packet scheduling (title) and further teaches using statistical weighting and prioritization capabilities (paragraph 13) and a satellite spot beam hopping packet scheduling system (paragraph 22).
Zheng et al. (US 2007/0135051 A1) is in the field of satellite communications (title, abstract) and further teaches the use of complex weights to define spot beams (paragraph 130), using complex weights to process received signals at the antennas of the satellite (paragraph 131), paragraph 135 discusses weight vectors used in the beam forming.
Torlak et al. are in the field of optimizing channel capacity in broadcasting (title, abstract) and further teaches finding weight vectors for each signal to maximize overall channel capacity (paragraph 1 under I. Introduction, page 243) in a system comprising multiple transmitters and antenna arrays (paragraph 2 under I. Introduction, page 243).

Regarding claims 2-7, 9-14, 16-22, 24-29, 31, 33, 35, 37, each claim depends from base claims 1, 8, 15, 23, 30, 32, 34, 36 respectively and therefore meet the criteria set out in PCT Article 33(2)-(3), for at least the same reasons as base claims 1, 8, 15, 23, 30, 32, 34, 36.

Claims 1-37 meet the criteria set out in PCT Article 33(4), and thus have industrial applicability because the subject matter claimed can be made or used in industry.

PCT Application No.: PCT-US2011-34845
Date of Search: 16 August 2011

Search History:

Limited Classification Search

The Patent Analyst performed a limited classification search within the following US, IPC, ECLA, or F-Term classification areas:

U.S. Class/Subclass(es): 342/352, 358
343
370/230, 316, 328, 330, 347
375/132, 138
455/12.1, 13.1, 73, 427, 428, 429

IPC (8) Class/Subclass(es): H04B 7/14, 185, 19, 195; 10/00, 105 (2011.01)
H04L 5/00 (2011.01)
H04Q 7/00 (2011.01)
H04W 16/00, 40/00 (2011.01)

See Global Search Results.

Global Patent Literature Text Search

The Patent Analyst performed the following global text search, which was not limited by classification but may or may not have been limited by other criteria:

PATBASE

Search history	
Search 1:	pd<20100502 (Results 100000)
Search 2:	(INV=("MILLER_MARK_J" OR "MILLER_MARK_J_S" OR "MILLER_MARK_JAMES" OR "PATEROS_CHARLES" OR "PATEROS_CHARLES_N")) (Results 52)
Search 3:	2 and satel* (Results 28)
Search 4:	2 and weigh* (Results 6)
Search 5:	2 and beam hop* (Results 0)
Search 6:	(PA=("VIASAT_CORP" OR "VIASAT_CORPORATION" OR "VIASAT_GEO_TECHNOLOGIE_INC" OR "VIASAT_INC" OR "VIASAT_INC_A_DELAWARE_CORP" OR "VIASAT_INC_A_DELAWARE_CORPORATION" OR "VIASAT_INC_CARLSBAD" OR "VIASAT_INC_US" OR "VIASAT_INCORPORATED" OR "VIASAT_MULTI_MEDIA_GMBH" OR "VIASAT_MULTI_MEDIA_GMBH_49808_LINGEN_DE" OR "VIASAT_MULTI_MEDIA_GMBH_LINGEN" OR "VIASAT_S_P_A" OR "VIASAT_SPA")) (Results 250)

Search 7:	6 and hub%spoke (Results 10)
Search 8:	6 and weigh* (Results 59)
Search 9:	8 and satel* (Results 52)
Search 10:	9 and (frame* or timesl* or slot*) (Results 36)
Search 11:	ft=hub%spoke* and bent%pip* (Results 2)
Search 12:	ft=satellite* and communicat* and path* and frame* and (time%slot* or slot*) (Results 7600)
Search 13:	12 and weigh* (Results 3214)
Search 14:	13 and dwell* (Results 279)
Search 15:	14 and capacit* (Results 234)
Search 16:	15 and allocat* near capac* (Results 14)
Search 17:	12 and beam hop* (Results 9)
Search 18:	pn=(WO2008/109860 or WO2004/073229 or EP1089459 or wo99/49590) (Results 4)
Search 19:	ft= beam hop* (Results 58)
Search 20:	uc=342/352 (Results 452)
Search 21:	uc=342/358 (Results 201)
Search 22:	uc=370/230 (Results 3378)
Search 23:	uc=370/316 (Results 635)
Search 24:	uc=370/328 (Results 6602)
Search 25:	uc=370/330 (Results 981)
Search 26:	uc=370/347 (Results 1722)
Search 27:	uc=375/132 (Results 566)

Search 28:	uc=375/138 (Results 120)
Search 29:	uc=455/12.1 (Results 1483)
Search 30:	uc=455/13.1 (Results 630)
Search 31:	uc=455/73 (Results 1453)
Search 32:	uc=455/427 (Results 913)
Search 33:	uc=455/428 (Results 745)
Search 34:	uc=455/429 (Results 177)
Search 35:	uc=343* (Results 31628)
Search 36:	(20 or 21 or 22 or 23 or 24 or 25 or 26 or 27 or 28 or 29 or 30 or 31 or 32 or 33 or 34 or 35) (Results 48844)
Search 37:	36 and vector* near (trans* or rece*) (Results 1150)
Search 38:	37 and dwell* (Results 55)
Search 39:	37 and weigh* (Results 527)
Search 40:	39 and frame* and (time%slot* or slot*) (Results 188)
Search 41:	36 and beam* (Results 11582)
Search 42:	41 and estimat* (Results 1811)
Search 43:	41 and path* near (gain* or amplif*) (Results 274)
Search 44:	43 and frame* and (time%slot* or slot*) (Results 68)
Search 45:	ic=H04B7/14 (Results 5369)
Search 46:	ic=H04B7/185 (Results 7870)
Search 47:	ic=H04B7/19 (Results 475)
Search 48:	ic=H04B7/195 (Results 363)

Search 49:	ic=H04B10/00 (Results 17484)
Search 50:	ic=H04B10/105 (Results 5214)
Search 51:	ic=H04L5/00 (Results 5900)
Search 52:	ic=H04Q7/00 (Results 11857)
Search 53:	ic=H04W16/00 (Results 5664)
Search 54:	ic=H04W40/00 (Results 2259)
Search 55:	(45 or 46 or 47 or 48 or 49 or 50 or 51 or 52 or 53 or 54) (Results 58568)
Search 56:	55 and vector* near (trans* or rece*) (Results 1331)
Search 57:	56 and dwell* (Results 35)
Search 58:	56 and weigh* (Results 662)
Search 59:	58 and frame* and (time%slot* or slot*) (Results 214)
Search 60:	55 and beam* (Results 8638)
Search 61:	60 and estimat* (Results 2393)
Search 62:	61 and path* near (gain* or amplif*) (Results 139)
Search 63:	61 and frame* and (time%slot* or slot*) (Results 767)
Search 64:	63 and hop* (Results 289)
Search 65:	64 and weigh* (Results 168)
Search 66:	55 and flex* near capacit* (Results 212)

GOOGLE PATENT http://www.google.com/patents

No. of Hits	Text String
31	flexible bent pipe satellite communication
3	weight set and weight vectors and beam hopping frame

100+	satellite communication and weight vectors
78	beam hopping and satellite communication and increased capacity
100+	increased capacity satellite communications
29	weight sets and traffic estimates and satellite communication
100+	capacity allocation and weight vectors
66	pathways and weight vectors and satellite
3	transmit weights and frame definition and beam hopping
54	beam hopping and traffic estimate
19	hopping frame and weight vector

Computer Accessed Text Databases Searched

The Patent Analyst searched the following computer accessed text databases:

Google Scholar: http://scholar.google.com/

No. of Hits	Text String
100+	flexible satellite weighted vector communication
100+	flexible capacity satellite communications
1	flexible allocation and satellite communications
12	IC "517410" and weight vector

EBSCO: http://web.ebscohost.com/

No. of Hits	Text String
100+	weight vectors and beam hopping and satellite communications
100+	flexible capacity satellite communications
100+	capacity allocation and bent pipe satellite
100+	satellite communications and dwell times and weight vectors

Date search was completed: 16 August 2011

JM/JG

of image complexity. In addition, *ModLVQ* generates better quality visual results in areas of images that contain plenty of detail whether or not the entire image is generally busy or smooth.

REFERENCES

[1] J. H. Conway and N. J. A. Sloane, *Sphere Packings, Lattices and Groups*. New York: Springer-Verlag, 1988.

[2] J. Knipe, "Improved spatial and transform domain compression schemes," Master's thesis, Univ. Alberta, Edmonton, Alta, Canada, 1996.

[3] Y. Linde, A. Buzo, and R. M. Gray, "An algorithm for vector quantizer design," *IEEE Trans. Commun.*, vol. COMM-28, pp. 84–95, 1980.

[4] F. J. MacWilliams and N. J. A. Sloane, *The Theory of Error Correcting Codes*. Amsterdam, The Netherlands: North-Holland, 1978.

[5] A. Said and W. A. Pearlman, "A new fast and efficient image codec based on set partitioning in hierarchical trees," *IEEE Trans. Circuits Syst. Video Technol.*, vol. 6, pp. 243–250, Sept. 1996.

[6] D. G. Sampson, E. A. B. da Silva, and M. Ghanbari, "Wavelet transform image coding using lattic vector quatnization," *Electron. Lett.*, vol. 30, no. 18, pp. 1477–1478, 1994.

[7] J. M. Shapiro, "Embedded image coding using zerotrees of wavelet coefficients," *IEEE Trans. Signal Processing*, vol. 41, pp. 3445–3462, Dec. 1993.

Fast Estimation of Weight Vectors to Optimize Multi-Transmitter Broadcast Channel Capacity

Murat Torlak, Guanghan Xu, Brian L. Evans, and Hui Liu

***Abstract*—We improve capacity of broadcast channels by employing multiple transmitters and exploiting the spatial diversity among the users. We derive fast algorithms to compute *orthogonal*, *near-optimal*, and *optimal* weight vectors for broadcasting message signals to two and three users. The key innovation is that we decouple the weight vectors in the measure of channel capacity to 1) simplify the optimization problem to a search for the maxima of a smooth multidimensional function and 2) derive closed-form expressions for the orthogonal and near-optimal algorithms.**

***Index Terms*— Antenna array, broadcast channel, channel capacity, SDMA.**

I. INTRODUCTION

During the 1990's, the demand for wireless communications and mobile cellular communications has dramatically increased. One way to increase the capacity and improve the performance of existing wireless communications systems is to incorporate the use of spatial diversity. Since Cover's novel work in single-transmitter broadcast channels [1], researchers have been exploring the use of both multitransmitter and multireceiver systems [2], [3]. In a multitransmitter broadcast channel, an antenna array transmits to two or more receiving users. To optimize the performance of the communications system, we must find the weight vector for each message signal that maximizes the overall channel capacity. In this correspondence, we assume independent decoding since it is more feasible to implement in practical systems than joint decoding.

Recently, wireless communication systems using antenna arrays, called spatial diversity multiple access (SDMA) systems [4]–[7], have been exploiting spatial diversity among the users. The design of the weight vectors that maximize the overall channel capacity of the broadcast channels, however, is still an open problem. The primary reason is that under certain power constraints, the channel capacity R is a highly nonlinear function of the M-dimensional weight vectors $\{\mathbf{w}_i\}$, where M is the number of transmitters [8].

In this correspondence, we decouple the weight vectors in R to reduce the optimization problem to a search for the maxima of a smooth multidimensional function, which has $P(P-1)$ dimensions for P users. Based on this decoupling, we derive two algorithms

Manuscript received May 28, 1997; revised July 10, 1997. This work was supported in part by an NSF CAREER Award under Grant MIP-9502695, ONR Grant N00014-95-1-0638, JSEP Contract F49620-95-C-0045, Motorola, Inc., Southwestern Bell Technology Resources, Inc., Texas Instruments, Nortel, NSF CAREER Award under Grant MIP-9702707, a University of Texas Austin Summer Research Assignment Grant, a Shell Oil Foundation Grant, AFOSR Grant F49620-97-1-0318, ONR Grant N00014-97-1-0475. The United States Government is authorized to reproduce and distribute reprints for governmental purposes notwithstanding any copyright restrictions hereon.

M. Torlak, G. Xu, and B. L. Evans are with the Department of Electrical and Computer Engineering, The University of Texas at Austin, Austin, TX 78712-1084 USA (e-mail: torlak@ece.utexas.edu; xu@ece.utexas.edu; bevans@ece.utexas.edu).

H. Liu is with the Department of Electrical Engineering, University of Virginia, Charlottesville, VA 22903-2442 USA (e-mail: hl3r@shamu.ee.virginia.edu).

Publisher Item Identifier S 1053-587X(98)00524-8.

1053–587X/98$10.00 © 1998 IEEE

for computing orthogonal and optimal weight vectors for the two-user and three-user cases: orthogonal and optimal. We also present a near-optimum algorithm for two-user case. The optimal algorithm requires an iterative search, whereas the orthogonal and near-optimal algorithms rely on closed-form solutions.

II. Background

In [8], we consider maximizing the channel capacity in a two-user broadcast system with multiple transmitters. Now, we consider more general problem formulation. We let $\{s_i(t)\}$ be the message signals. The base station weights each message signal with a *weight* vector and then transmits the superimposed signal from an array with M elements

$$\mathbf{y}(t) = \sum_{i=1}^{d} \beta_i \mathbf{w}_i s_1(t).$$

The signals $\{s_i(t)\}$ are assumed to be i.i.d. with Gaussian distribution; $\{\mathbf{w}_i\}$ are normalized weight vectors, i.e., $\|\mathbf{w}_i\| = 1$, $i = 1, \cdots, d$; and $\{\beta_i\}$ are the transmitting magnitudes that are subject to certain power constraints. For simplicity, we assume

$$\beta_1^2 + \cdots + \beta_d^2 = 1.$$

If the user receivers employ independent decoding, then the achievable channel capacity for each user can be expressed as $\log(1 + \text{SINR})$, where SINR is the signal-to-interference noise ratio

$$R_i = \frac{1}{2} \log \left(1 + \frac{\alpha_i^2 \beta_i^2 \mathbf{w}_i^H \mathbf{a}_i \mathbf{a}_i^H \mathbf{w}_i}{1 + \sum_{j=1, j \neq i}^{d} \alpha_i^2 \beta_j^2 \mathbf{w}_j^H \mathbf{a}_i \mathbf{a}_i^H \mathbf{w}_j} \right) \tag{1}$$

where $\mathbf{a}_i = (a_{i,1} a_{i,2} \cdots a_{i,M})^T$ is a unit vector representing the direction of the spatial signature vector of the ith user, and α_i is the magnitude of the spatial signature vector of the ith user. The spatial signature vector, which is also known as the steering vector, of the ith user represents the propagation pattern of the ith user and is equal to $\alpha_i \mathbf{a}_i$. The noise power has been normalized to unity.

The goal is to select the weight vectors $[\mathbf{w}_1 \cdots \mathbf{w}_d]$ that maximize the total channel capacity $R_1 + \cdots + R_d$. Maximizing the total channel capacity is different from maximizing the SINR for each user. Maximizing the SINR is a first-order approximation to the total channel capacity in (1) as it is the first term in the Taylor series for $\log(1 + \text{SINR})$. To a first-order approximation, (1) is equal to $\text{SINR}_1 + \cdots + \text{SINR}_d$, which is the total SINR.

III. Decoupling Weight Vectors

Theorem 1: The optimal weight vectors that maximize the channel capacity are in the range space (signal subspace) of $\mathbf{A}$ and can be written as a linear combination of spatial signature vectors.

Proof:

$$\mathbf{w}_i = \lambda_{ai} \mathbf{A} + \lambda_{bi} \mathbf{B} \tag{2}$$

where $\mathbf{A} = [\mathbf{a}_1 \cdots \mathbf{a}_d]$ is the spatial signature matrix; $\mathbf{B} = [\mathbf{b}_{d+1} \cdots \mathbf{b}_M]$, which denotes the orthogonal subspace of $\mathbf{A}$, i.e., $\mathbf{A} \perp \mathbf{B}$; $\lambda_{ai} = [\lambda_{ai,1} \cdots \lambda_{ai,d}]$, and $\lambda_{bi} = [\lambda_{bi,d+1} \cdots \lambda_{bi,M}]$. Clearly, we must show that $\|\lambda_{bi}\|^2 = 0$. Based on (1), $\{\lambda_{bi}\}$ does not directly contribute to $\kappa_{ij} = \mathbf{w}_j^H \mathbf{a}_i \mathbf{a}_i^H \mathbf{w}_j$, as described in the next section; however, $\{\lambda_{bi}\}$ is in the power constraint

$$\|\mathbf{w}_i\| = \|\lambda_{ai}\|^2 + \|\lambda_{bi}\|^2 = 1. \tag{3}$$

It is obvious that $\|\lambda_{bi}\|^2 = 0$ should be true not to waste any energy in the orthogonal subspace. A similar theorem is also applicable to the case in which the average SINR is maximized [9]. □

IV. Two-User Case

For a given (β_1, β_2) pair and a given $(\mathbf{a}_1, \mathbf{a}_2)$ pair, our goal is to find the weight vectors $\mathbf{w}_1$ and $\mathbf{w}_2$ that optimize the total channel capacity $R = R_1 + R_2$. Denote

$$\begin{aligned} \kappa_{11} &= \mathbf{w}_1^H \mathbf{a}_1 \mathbf{a}_1^H \mathbf{w}_1 \quad \kappa_{12} = \mathbf{w}_2^H \mathbf{a}_1 \mathbf{a}_1^H \mathbf{w}_2 \\ \kappa_{21} &= \mathbf{w}_1^H \mathbf{a}_2 \mathbf{a}_2^H \mathbf{w}_1 \quad \kappa_{22} = \mathbf{w}_2^H \mathbf{a}_2 \mathbf{a}_2^H \mathbf{w}_2 \end{aligned} \tag{4}$$

where $\kappa_{ij} = \cos^2 \angle(\mathbf{w}_i, \mathbf{a}_j)$ is a measure of the angle between the ith weight vector and the jth spatial signature vector. Thus, each κ_{ij} term is confined to [0, 1].

It is seen from (1) that for certain κ_{11} and κ_{22}, R is optimal if the relationship between $\kappa_{21} = \mathbf{w}_1^H \mathbf{a}_2 \mathbf{a}_2^H \mathbf{w}_1 = \cos^2 \angle(\mathbf{w}_1, \mathbf{a}_2)$ and $\kappa_{12} = \mathbf{w}_2^H \mathbf{a}_1 \mathbf{a}_1^H \mathbf{w}_2 = \cos^2 \angle(\mathbf{w}_2, \mathbf{a}_1)$ are determined. The focus of the problem is to find the maximum values of κ_{11} and κ_{22} in terms of κ_{21} and κ_{12} or to find the minimum values of κ_{21} and κ_{12} in terms of κ_{11} and κ_{22}, respectively. The relationship between can be found by substituting (3) into the first two equations in (4) and $\mathbf{w}_1^H \mathbf{w}_1 = 1$

$$\begin{aligned} \lambda_{11}^2 + \lambda_{12}^2 + 2\lambda_{11}\lambda_{12}\sqrt{\zeta} &= 1 \\ \lambda_{11}^2 + \lambda_{12}^2 \zeta + 2\lambda_{11}\lambda_{12}\sqrt{\zeta} &= \kappa_{11} \\ \lambda_{11}^2 \zeta + \lambda_{12}^2 \zeta + 2\lambda_{11}\lambda_{12}\sqrt{\zeta} &= \kappa_{21} \end{aligned} \tag{5}$$

where

$$\zeta = \mathbf{a}_1^H \mathbf{a}_2 \mathbf{a}_2^H \mathbf{a}_1 = \cos^2 \angle(\mathbf{a}_1, \mathbf{a}_2) \tag{6}$$

so that $0 \leq \zeta \leq 1$. Although $\{\lambda_{ij}\} = r_{\lambda_{ij}} e^{j\theta_{\lambda_{ij}}}$ and $\mathbf{a}_1^H \mathbf{a}_2 = \sqrt{\zeta} e^{\theta\zeta}$ are usually complex numbers, we can always adjust the phases to cancel out each other without affecting the values of κ_{ij} and the norm of weight vectors and spatial signature vectors. Therefore, we can solve the equations in (5) for absolute values of λ_{11}, λ_{12}, and κ_{11}. We find the relation between κ_{11} and κ_{21} as

$$\kappa_{11} = \left[\sqrt{\zeta \kappa_{21}} + \sqrt{(1-\zeta)(1-\kappa_{21})} \right]^2. \tag{7}$$

We obtained these results using Lagrange multipliers [8]. By following the same procedure for $\mathbf{w}_2$, we find a similar function for $\mathbf{w}_2$. We rewrite the channel capacity in terms of κ_{12} and κ_{21}.

The optimization problem is to maximize

$$\begin{aligned} &\frac{1}{2} \log \left\{ 1 + \frac{\gamma_{11} \left[\sqrt{\zeta \kappa_{21}} + \sqrt{(1-\zeta)(1-\kappa_{21})} \right]^2}{1 + \gamma_{12} \kappa_{12}} \right\} \\ &+ \frac{1}{2} \log \left\{ 1 + \frac{\gamma_{22} \left[\sqrt{\zeta \kappa_{12}} + \sqrt{(1-\zeta)(1-\kappa_{12})} \right]^2}{1 + \gamma_{21} \kappa_{21}} \right\} \end{aligned} \tag{8}$$

with respect to κ_{12} and κ_{21} subject to the constraints

$$\begin{aligned} 0 \leq \kappa_{12} \leq \zeta \leq 1 \\ 0 \leq \kappa_{21} \leq \zeta \leq 1 \end{aligned} \tag{9}$$

where

$$\begin{aligned} \zeta &= \mathbf{a}_1^H \mathbf{a}_2 \mathbf{a}_2^H \mathbf{a}_1 = \cos^2 \angle(\mathbf{a}_1, \mathbf{a}_2) \\ \gamma_{ij} &= \alpha_i^2 \beta_j^2 \qquad \text{for } i, j = 1, 2. \end{aligned} \tag{10}$$

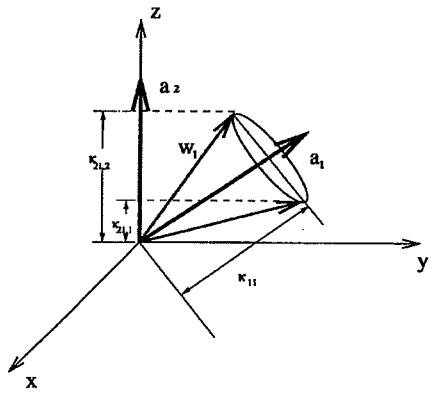

Fig. 1. Illustration of search for a optimal weight vector.

A. Orthogonal Weight Vector Algorithm

Due to the additional degrees of freedom introduced by multiple transmitters, one can manipulate the complex weight vectors to enhance the desired signal and, at the same time, suppress the interference. There exists $\mathbf{w}_i$ such that $\mathbf{w}_i^H \mathbf{a}_i = \delta_{ij}$, which can completely eliminate the interference from one to the other. When $\mathbf{w}_i^H \mathbf{a}_j = \delta(i, j)$, the channels are orthogonal, and each message can be transmitted without interference. As shown in Fig. 1, $\mathbf{w}_1$ should be in the direction of $\mathbf{P}_{\mathbf{a}_2}^{\perp} \mathbf{a}_1$, where $\mathbf{P}_{\mathbf{a}_2}^{\perp}$ denotes the projection operator to the orthogonal space of $\mathbf{a}_2$. Orthogonal weight vectors correspond to the following parameter values.

$$\kappa_{11} = 1 - \zeta \quad \kappa_{12} = 0$$
$$\kappa_{21} = 0 \quad \kappa_{22} = 1 - \zeta \tag{11}$$

However, this selection is generally not optimal in channel capacity since the desired signal power at the receiver may be reduced as well.

B. Optimal Weight Vector Algorithm

To find the optimal weight vectors, we maximize the nonlinear objective function (8) with respect to variables κ_{11} and κ_{22} subject to (10). The objective function and constraints are real-valued, continuous, and twice differentiable, and the solution space is convex. As a consequence, the optimization problem has a global maximum. Although a closed-form solution for the global maximum may not exist, numerical methods can be used to search for the global maximum. For example, the global optimum solution will always be found by the iterative sequential quadratic programming method [10]. An alternative iterative search algorithm is proposed here:

1) Choose values for κ_{12} and κ_{21}.
2) For the given $(\kappa_{12}, \kappa_{21})$ pair, find the legitimate $\mathbf{w}_1$, which maximizes $\cos^2 \angle(\mathbf{w}_1, \mathbf{a}_1)$, and $\mathbf{w}_2$, which maximizes $\cos^2 \angle(\mathbf{w}_2, \mathbf{a}_2)$. Evaluate R using (8).
3) Repeat Steps 1 and 2 for a finite number of times, and identify the optimal pair $(\kappa_{12,opt}, \kappa_{21,opt})$, which maximize R in (8).
4) The weight vectors that correspond to $\kappa_{12,opt}$ and $\kappa_{21,opt}$ in Step 2 are the solutions.

Step 3 involves only a 2-D search, which is tractable in general but computationally expensive. Next, we derive a near-optimum closed-form solution that is simple to compute.

C. Near-Optimal Weight Vector Algorithm

After substituting $\kappa_{21} = \cos^2(\theta_2)$, $\kappa_{12} = \cos^2(\theta_1)$, and $\zeta = \cos^2(\phi)$ into (8) and performing logarithmic manipulations, the

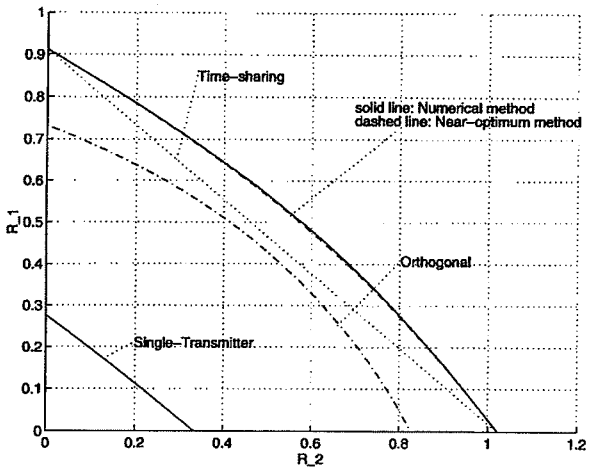

Fig. 2. Channel capacities using different weight vectors.

channel capacity can be rewritten as

$$\frac{1}{2}\log[\mathbf{J}(\theta_1, \theta_2)] = \frac{1}{2}\log\left\{\left[1 + \frac{\gamma_{11}\cos(\theta_2 - \phi)^2}{1 + \gamma_{12}\cos(\theta_1)^2}\right] \times \left[1 + \frac{\gamma_{22}\cos(\theta_1 - \phi)^2}{1 + \gamma_{21}\cos(\theta_2)^2}\right]\right\}. \tag{12}$$

The maximum total capacity of a two-user broadcasting system depends on the angles θ_1 and θ_2 between the weight vectors and the spatial signature vectors, as seen in (4). Since the logarithm is a monotonically increasing one-to-one function over the positive numbers, maximizing the total channel capacity in (12) is equivalent to maximizing $\mathbf{J}(\theta_1, \theta_2)$. A good initial guess at the optimum value is $\theta_1 = \phi$ and $\theta_2 = \phi$, which are the left endpoints of κ_{12} and κ_{21}, respectively, because they bring the cosine terms in the numerators in (12) to 1. We refine this approximation using perturbation (sensitivity) analysis to find the local optimal value [8]. The near-optimum angle between the ith weight vector and the jth spatial signature vector is

$$\theta_i = \phi + 2\cos^2(\phi)\Delta\theta_i \tag{13}$$

where

$$\Delta\theta_i = \frac{\gamma_{ji}\gamma_{jj}\cos(\phi)\sin(\phi)[1 + \gamma_{ii} + \gamma_{ij}\cos^2(\phi)]}{\gamma_{ii}[1 + \gamma_{ji}\cos^2(\phi)][1 + \gamma_{jj} + \gamma_{ji}\cos^2(\phi)]} \tag{14}$$

where $i, j = 1, 2$ and $i \neq j$. Since the perturbation analysis returns an approximation of the local optimum angles, the boundary conditions must be explicitly checked to ensure that the local optimum value is a local maximum. For each angle, two boundary conditions on k_{ij} (i.e., $\theta_i = \phi$ and $\theta_i = \pi$) and one local optimum value [i.e., θ_i in (13)] exist. With two angles, a total of nine angle pairs (three times three) must be substituted into $\mathbf{J}(\theta_1, \theta_2)$, and the pair that produces the largest $\mathbf{J}(\theta_1, \theta_2)$ value is the local maximum.

Using the closed-form solutions in (13), the near-optimum weight vectors can be found in the following steps.

1) Compute $\zeta = \cos^2(\phi)$ in (6) using the given $(\mathbf{a}_1, \mathbf{a}_2)$ spatial signature pair.
2) For $i = 1, 2$ and $j = 1, 2$, compute γ_{ij} in (10) using the given (α_i, β_j) values.
3) Compute near-optimum θ_1 and θ_2 angles in (13) and (14).
4) Check boundary conditions and near-optimum angle values by substituting all nine possible angle pairs for $\mathbf{J}(\theta_1, \theta_2)$ in (12), and keep the angle pair (θ_1', θ_2') that maximizes $\mathbf{J}(\theta_1, \theta_2)$.
5) The weight vectors corresponding to (θ_1', θ_2') are the solutions.

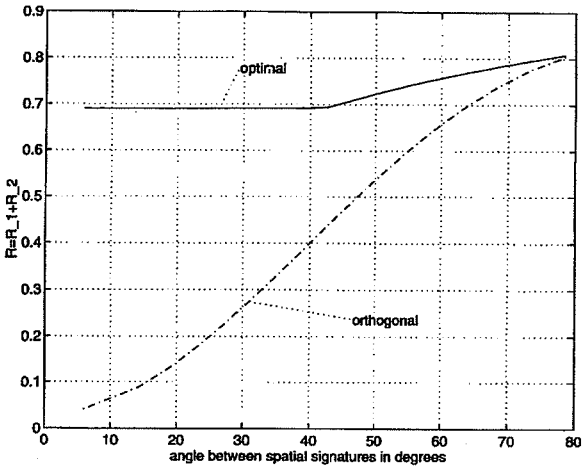

Fig. 3. Maximum channel capacities versus ϕ.

V. Three-User Case

For the three-user case, our goal again is to maximize the total channel capacity $R = R_1 + R_2 + R_3$. As in the two-user case, denote

$$\kappa_{ji} = \cos^2 \angle(\mathbf{w}_i, \mathbf{a}_j). \tag{15}$$

Now, the focus of the problem is to find the relationship between κ_{ii} and $\{\kappa_{ji}, j \neq i\}$. Applying Theorem 1, we derive the relation between κ_{11} and $(\kappa_{21}, \kappa_{31})$ as

$$\begin{aligned}\kappa_{11} = \Big[&\sqrt{\zeta_{12}\kappa_{21}} - \sqrt{\zeta_{13}\zeta_{23}\kappa_{21}} + \sqrt{\zeta_{13}\kappa_{31}} - \sqrt{\zeta_{12}\zeta_{23}\kappa_{31}} \\ &+ \sqrt{(1-\zeta_{12}-\zeta_{13}+2\zeta_{12}\zeta_{13}\zeta_{23}-\zeta_{23})} \\ &\times\sqrt{(1-\zeta_{23}-\kappa_{21}+2\zeta_{23}\kappa_{21}\kappa_{31}-\kappa_{31})}\Big]^2/(1-\zeta_{23})^2\end{aligned} \tag{16}$$

where $\zeta_{ij} = \cos^2 \angle(\mathbf{a}_i, \mathbf{a}_j)$. Similar derivations can be carried out to find the relations between κ_{22} and $(\kappa_{12}, \kappa_{32})$ and between κ_{33} and $(\kappa_{13}, \kappa_{23})$. Using the relations, channel capacity can be expressed in terms of $(\kappa_{21}, \kappa_{31}, \kappa_{12}, \kappa_{32}, \kappa_{13}, \kappa_{23})$. For each k_{ii}, the solution amounts to solving a set of linear equations and substituting the result into $\mathbf{w}^H\mathbf{w} = 1$. The parameter values for orthogonal weight vectors are $\kappa_{ij} = 0, i \neq j$ and $\kappa_{11} = (1 - \zeta_{12} - \zeta_{13} + 2\zeta_{12}\zeta_{13}\zeta_{23} - \zeta_{23})/(1-\zeta_{23})$, and $(\kappa_{22}, \kappa_{33})$ can be found similar to κ_{11}. However, as in the two-user case, this selection is generally not optimal in channel capacity. To find optimal weight vectors for the three-user case, we have to maximize the channel capacity with respect to variables $(\kappa_{21}, \kappa_{31}, \kappa_{12}, \kappa_{32}, \kappa_{13}, \kappa_{23})$. A similar iterative algorithm in Section IV-B can be used to search for the maximum.

VI. Numerical Examples

First, we consider the case in which a linear uniform array with eight antenna elements is transmitting to two users. Fig. 2 compares the channel capacity of the orthogonal, near-optimal, and optimal weight vector algorithms with the single antenna and naive time-sharing approaches. In Fig. 2, the angle between spatial signature vectors and the gains of spatial signature vectors, respectively, are $\phi = 54$, $\alpha_1 = 1.22$, and $\alpha_2 = 1.333$. Second, we compare the maximum total capacity with the orthogonal and optimal weight vector algorithms with respect to the angle between the spatial signatures. As shown in Fig. 3, the difference becomes very significant when the angle between the spatial signature vectors is small.

VII. Conclusion

We use the weight vectors in multitransmitter broadcast systems to optimize the channel capacity R subject to power constraints. We prove that the optimal weight vectors lie in the signal subspace of the spatial signature matrix (i.e., the steering matrix). Instead of computing the signal subspace using eigendecomposition techniques, we decouple the weight vectors in R to reduce the optimization problem to a search for the maxima of a smooth multidimensional function. Based on this decoupling, we derive fast algorithms to compute *orthogonal*, *near-optimal*, and *optimal* weight vectors for two and three users.

References

[1] T. Cover and J. Thomas, *Elements of Information Theory*. New York: Wiley, 1991.
[2] P. Balaban and J. Salz, "Optimum diversity combining and equalization in digital data transmission with applications to cellular mobile radio—Part I: Theoretical considerations," *IEEE Trans. Commun.*, vol. 40, pp. 885–894, May 1992.
[3] S. Pillai, *Array Signal Processing*. New York: Springer-Verlag, 1989.
[4] P. Balaban and J. Salz, "Optimum diversity combining and equalization in data transmission with application to cellular mobile radio—Part II: Numerical results," *IEEE Trans. Commun.*, vol. 40, pp. 895–907, May 1992.
[5] G. Xu, H. Liu, W. Vogel, H. Lin, S. S. Jeng, and G. Torrence, "Experimental studies of space-division-multiple-access schemes for spectral efficient wireless communications," in *Proc. IEEE Int. Conf. Commun.*, May 1994, pp. 800–804.
[6] B. Suard, G. Xu, H. Liu, and T. Kailath, "Channel capacity of space-division-multiple-access schemes," in *Proc. IEEE Asilomar Conf. Signals, Syst., Comput.*, Pacific Grove, CA, Nov. 1994, pp. 1159–1163.
[7] ——, "Uplink channel capacity of space-division-multiple-access schemes," to be published.
[8] M. Torlak, G. Xu, B. Evans, and H. Liu, "Optimal weight vectors for broadcast channel," in *Proc. IEEE Asilomar Conf. Signals, Syst., Comput.*, Pacific Grove, CA, Nov. 1996.
[9] W. Yang and G. Xu, "A new method for designing smart antenna downlink weighting vectors with filter banks," in *SPIE Conf. Adv. Signal Process. Algorithms, Arch., Implement.*, San Diego, CA, July 1997.
[10] S. Wright, "Convergence of SQP-like methods for constrained optimization," *SIAM J. Contr. Optimiz.*, vol. 27, no. 1, pp. 13–26, Jan. 1989.

PCT WORLD INTELLECTUAL PROPERTY ORGANIZATION
International Bureau

INTERNATIONAL APPLICATION PUBLISHED UNDER THE PATENT COOPERATION TREATY (PCT)

(51) International Patent Classification 6 : H04B 7/204	A1	(11) International Publication Number: WO 98/32245
		(43) International Publication Date: 23 July 1998 (23.07.98)

(21) International Application Number: PCT/US97/00204

(22) International Filing Date: 17 January 1997 (17.01.97)

(71) Applicant: TELEDESIC LLC [US/US]; 2300 Carillon Point, Kirkland, WA 98033 (US).

(72) Inventor: TUCK, Edward, F.; 2412 East Crescent View Drive, West Covina, CA 91790 (US).

(74) Agent: BROWN, Ward; Christensen O'Connor Johnson & Kindness PLLC, Suite 2800, 1420 Fifth Avenue, Seattle, WA 98101 (US).

(81) Designated States: AL, AM, AT, AU, AZ, BA, BB, BG, BR, BY, CA, CH, CN, CU, CZ, DE, DK, EE, ES, FI, GB, GE, HU, IL, IS, JP, KE, KG, KP, KR, KZ, LC, LK, LR, LS, LT, LU, LV, MD, MG, MK, MN, MW, MX, NO, NZ, PL, PT, RO, RU, SD, SE, SG, SI, SK, TJ, TM, TR, TT, UA, UG, UZ, VN, ARIPO patent (KE, LS, MW, SD, SZ, UG), Eurasian patent (AM, AZ, BY, KG, KZ, MD, RU, TJ, TM), European patent (AT, BE, CH, DE, DK, ES, FI, FR, GB, GR, IE, IT, LU, MC, NL, PT, SE), OAPI patent (BF, BJ, CF, CG, CI, CM, GA, GN, ML, MR, NE, SN, TD, TG).

Published
With international search report.

(54) Title: METHOD FOR CONTROLLING THE TRANSMISSION OF A BEAM OF RADIATED ENERGY IN A CELLULAR SATELLITE SYSTEM

(57) Abstract

Satellite footprints (16a, 16b, 16c) are partitioned into elongate spanning cells (18) and multiple elongate segments (22). The elongate spanning cells (18) resemble long strips that extend along an entire footprint (16a, 16b, 16c). The alignment of the elongate spanning cells (18) along a footprint (16a, 16b, 16c) is determined by a correction angle Φ, which compensates for the changing relative motion of the Earth's surface at various latitudes.

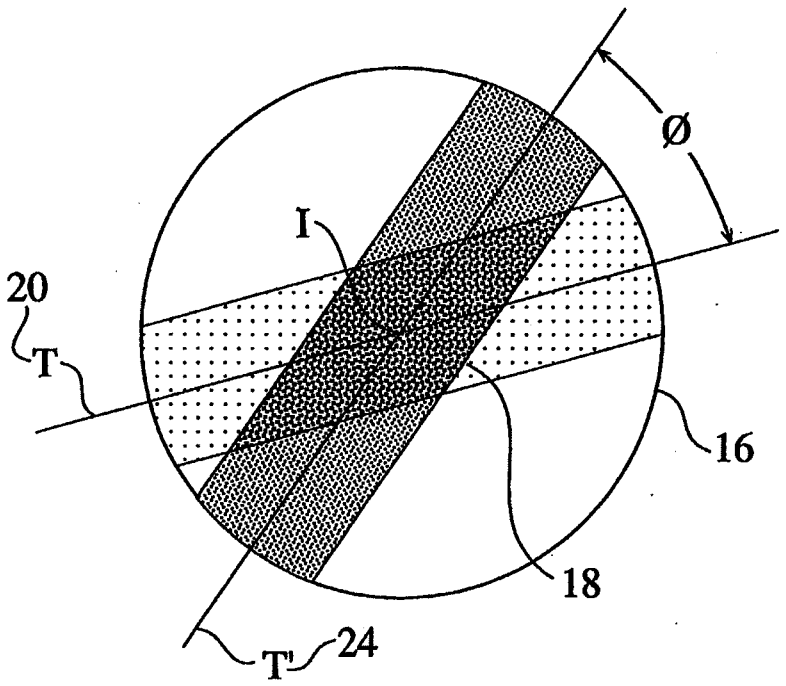

FOR THE PURPOSES OF INFORMATION ONLY

Codes used to identify States party to the PCT on the front pages of pamphlets publishing international applications under the PCT.

AL	Albania	ES	Spain	LS	Lesotho	SI	Slovenia
AM	Armenia	FI	Finland	LT	Lithuania	SK	Slovakia
AT	Austria	FR	France	LU	Luxembourg	SN	Senegal
AU	Australia	GA	Gabon	LV	Latvia	SZ	Swaziland
AZ	Azerbaijan	GB	United Kingdom	MC	Monaco	TD	Chad
BA	Bosnia and Herzegovina	GE	Georgia	MD	Republic of Moldova	TG	Togo
BB	Barbados	GH	Ghana	MG	Madagascar	TJ	Tajikistan
BE	Belgium	GN	Guinea	MK	The former Yugoslav Republic of Macedonia	TM	Turkmenistan
BF	Burkina Faso	GR	Greece			TR	Turkey
BG	Bulgaria	HU	Hungary	ML	Mali	TT	Trinidad and Tobago
BJ	Benin	IE	Ireland	MN	Mongolia	UA	Ukraine
BR	Brazil	IL	Israel	MR	Mauritania	UG	Uganda
BY	Belarus	IS	Iceland	MW	Malawi	US	United States of America
CA	Canada	IT	Italy	MX	Mexico	UZ	Uzbekistan
CF	Central African Republic	JP	Japan	NE	Niger	VN	Viet Nam
CG	Congo	KE	Kenya	NL	Netherlands	YU	Yugoslavia
CH	Switzerland	KG	Kyrgyzstan	NO	Norway	ZW	Zimbabwe
CI	Côte d'Ivoire	KP	Democratic People's Republic of Korea	NZ	New Zealand		
CM	Cameroon			PL	Poland		
CN	China	KR	Republic of Korea	PT	Portugal		
CU	Cuba	KZ	Kazakstan	RO	Romania		
CZ	Czech Republic	LC	Saint Lucia	RU	Russian Federation		
DE	Germany	LI	Liechtenstein	SD	Sudan		
DK	Denmark	LK	Sri Lanka	SE	Sweden		
EE	Estonia	LR	Liberia	SG	Singapore		

METHOD FOR CONTROLLING THE TRANSMISSION OF A BEAM OF RADIATED ENERGY IN A CELLULAR SATELLITE SYSTEM

TECHNICAL FIELD

The present invention relates to the field of satellites. More particularly, this invention provides methods of conveying and controlling a beam of radiated energy to or from a satellite orbiting the Earth in an orbit which is not an Equatorial orbit at geosynchronous altitude. The present invention offers optimized frequency utilization and enhanced availability, capacity and reliability of remote sensing and communication services.

BACKGROUND ART

Over the past few years, several satellite communication systems have been proposed. These systems are generally designed to enhance existing terrestrial cellular networks. Cellular telephone networks utilize fixed transmitting and receiving stations located in adjacent cells. Some of the satellite communication systems that will be launched later in this decade will rely on satellites operating in low Earth orbits. In cellular networks, the central transmitting and receiving antennas are stationary, and subscribers may communicate with one another while moving from cell to cell. A low Earth orbit network also allows subscribers to move, but the transmitting and receiving antennas aboard each satellite in the network are constantly in motion. Unlike some earlier communications systems which employed satellites in geosynchronous orbits, the spacecraft in low Earth orbit will move rapidly across the sky over any given place on the ground. Since the position of a low Earth orbit (LEO) satellite is not fixed with respect to a location on the ground, some LEO networks require complicated schemes for steering radio beams to users on the ground. Since each LEO satellite is only visible for a few minutes from the user's point of view, any communication through the network that lasts more than a few minutes must be handled by more than one satellite. The complex switching that is required to "hand-off" continuous communications service from one satellite to another imposes severe processing and power burdens on the LEO satellites.

In previous satellite communication schemes, spacecraft which are not held stationary over one particular location on the Earth in geosynchronous orbits fly over large regions of the Earth very rapidly. The radio beams generated by these fast moving spacecraft sweep across vast regions of the Earth's surface at the same rate of speed. If these beams were visible to the eye, they would paint bright circular and elliptical patches of light on the ground beneath the satellite which emitted them. In a system that employs satellite-fixed cells, the "footprint" of the radio beams propagated by the spacecraft defines the zone on the ground called a "cell" which is illuminated by the spacecraft. This satellite-fixed cell moves constantly as the spacecraft orbits around the globe.

United States Patent No. 5,268,694 by Jan et al. discloses a communication system employing low Earth orbiting satellites which project footprints on the Earth by means of antennas radiating and receiving energy. Each

footprint is divided into cells. The cell shape is shown as hexagonal and described as being more circular or elliptical dependent upon the beam control. In U.S. Patent No. 5,422,647, Hirshfield et al. describe a communications satellite payload providing for communication between user devices, such as hand-held cellular telephones and terrestrial gateways. The payload supports a plurality of independent antenna beams. Jan et al. show many discrete cells of small diameter which are organized in the footprint according to the best fit. In this manner they are not aligned with the satellite's track. Hirshfield et al. show somewhat larger and more elliptical cells than Jan et al. Hirshfield cells are organized into a best-fit pattern and are not maintained in any particular reference to the changing relative velocity of the satellite over the Earth as it travels through its orbit.

In International Publication WO 93/07683, Rouffet et al. teach a system for communication with terminals via low-orbiting satellites, in which elongated elliptical beams of each coverage area are illuminated in accordance with a beam-hopping procedure. A corresponding English language version of this Patent Application may be found in Australian Patent Application AU9226029. The content of this earlier disclosure corresponds to the preamble of the independent claims.

Rouffet et al. specifically call for beams aligned with the direction of a satellites travel in orbit (direction 15) a vector in space. However, Rouffet et al. do not suggest that the antenna beams be continuously maintained aligned with a vector which is the satellite's track on the Earth's surface. The system described by Rouffet et al. is also constrained by the use of a single frequency band for communication. It is therefore necessary for the system to operate the beams alternatively to prevent interference. Rouffet et al. disclose sub-division of the beams to implement a time division multiple access technique for preventing interference between signals and for no other purpose. However, their elongated cell is not disclosed as being divided into a plurality of linear segments.

One recent attempt to overcome the problem of providing a high capacity LEO communications system which ameliorates the burdens of complex switching due to frequent hand-offs between satellites is described in U.S. Patent No. 5,408,237 entitled *Earth-Fixed Cell Beam Management for Satellite Communication System.* This Patent describes methods and apparatus which pertain to the allocation of radio beams which are generated by a constellation of satellites orbiting below geosynchronous altitude. These beams are precisely controlled so that they illuminate "Earth-fixed cells," as opposed to "satellite-fixed cells."

In sharp contrast to satellite fixed cells, an "Earth-fixed cell" is a stationary region mapped to an "Earth-fixed grid" that has permanent fixed boundaries, just like a city or a state. Although the rapidly moving satellites still shine their radio beams over the ground in rapidly moving footprints, the locations of the footprints at any given time do not determine the location of the unchanging Earth-fixed cells. The great advantage provided by using cells having boundaries that are fixed with respect to an Earth-fixed grid is realized when a subscriber being served by one satellite must switch to another beam in the same satellite or to a second satellite because the first is moving out of range below the local horizon. With satellite-fixed cells, this "hand-off" involves the assignment to the terminal of a new communication channel within the new beam or new satellite.

This assignment process takes time and consumes processing capacity at both the terminal and the satellite. It is also subject to blocking, call interruption, and call dropping if there is not an idle communication channel in the next serving beam or satellite. The Earth-fixed cell method avoids these problems by allocating communication channels (frequency, code and/or time slot) on an Earth-fixed cell basis rather than on a satellite-

fixed cell basis. Regardless of which satellite/beam is currently serving a particular cell, the terminal maintains the same channel assignment, thus substantially eliminating the "hand-off" problem.

The Earth-fixed cell method uses software that provides position and attitude information about each satellite in the constellation. Position data from this software enables each satellite to map or bound the surface into areas representing an unchanging "Earth-fixed grid." Each satellite is capable of steering, transmitting and receiving beams conveying packets of information to the Earth-fixed grid. The beams are continually adjusted to compensate the effects of satellite motion, attitude changes, and the rotation of the Earth. These goals are accomplished by partitioning satellite footprints into elongate, preferably linear, spanning cells and optionally also into multiple elongate, preferably linear, segments.

Unfortunately, many satellite communication and remote sensing systems that will be launched in the near future will rely on the more conventional method of utilizing satellite-fixed cells. Without the great benefits of an Earth-fixed cell method, a large portion of the microprocessor capabilities and power capacities of these systems will be diverted to internal switching tasks.

This problem of designing satellite systems which employ satellite-fixed cells but which avoid the deleterious effects of complex switching due to frequent hand-offs has presented a major challenge to the satellite business. The development of a high capacity satellite system which is capable of using satellite-fixed cells but which also minimizes hand-off overhead would constitute a major technological advance and would satisfy a long felt need within the communications and remote sensing industries.

DISCLOSURE OF THE INVENTION

The preferred embodiment of the *Cellular Satellite System* pertains to the management and allocation of radio beams which are generated by a satellite which moves with respect to the Earth's surface. The invention pertains to any satellite which is not in an Equatorial orbit at geosynchronous altitude. The present invention reduces hand-off overhead in systems that utilize satellite-fixed cells, augments frequency re-use, and enhances the communications and sensing capacity of the satellite.

These goals are accomplished by partitioning satellite footprints into elongate spanning cells and multiple elongate segments. The elongate spanning cells are areas that contain the satellite's track along the ground. They resemble long strips that extend along the entire footprint. Multiple elongate segments are smaller contiguous areas that lie within the elongate spanning cells. While the elongate spanning cells are generally located so that their longest axis is collinear with the apparent direction of travel of the satellite over the Earth's surface at the nadir, the longitudinal axis of the elongate spanning cells is actually slightly offset from the projection of apparent direction of travel of the satellite by a correction angle ϕ. This correction angle compensates for the changing relative motion of the Earth's surface at various latitudes.

As a result of creating elongate spanning cells and continually maintaining the cells in alignment with the satellite's track over the Earth's surface, terminals in the satellite's track remain within the spanning cells for approximately the entire time the satellite footprint passes over the terminal. This feature reduces the number of

hand-offs as the satellite-fixed cells sweep over the terminal, augments frequency re-use and enhances the communications and sensing capacity of the satellite.

An appreciation of other aims and objectives of the present invention and a more complete and comprehensive understanding of this invention may be achieved by studying the following description of a preferred embodiment and by referring to the accompanying drawings.

BRIEF DESCRIPTION OF THE DRAWINGS

Figures 1 and 2 are schematic illustrations of the Earth and of satellites operating in orbits which are not Equatorial orbits at geosynchronous altitude.

Figure 3 reveals satellites in Earth orbit and the footprints they produce on the Earth's surface.

Figure 4 is a schematic diagram that shows a single footprint and a single elongate spanning cell. The alignment of the elongate spanning cell has been corrected by an angle ϕ which compensates for the changing relative motion of the Earth's surface at various latitudes.

Figure 5 is a schematic diagram that reveals a single footprint and several elongate spanning cells.

Figure 6 presents another schematic diagram showing a single footprint, several elongate spanning cells and a number of multiple elongate segments within each elongate spanning cell.

Figures 7, 8 and 9 supply graphs which illustrate the functional relationships of the correction angle versus argument of perigee for a near-polar orbit, surface velocity versus latitude and latitude of nadir versus argument of perigee for an inclined orbit.

Figure 10 is a schematic illustration of a satellite in Earth orbit. This figure also portrays the satellite's track on the Earth, which resembles a spiral.

Figure 11 is a perspective view of a satellite which is designed for use with the preferred embodiment of the invention.

Figures 12, 13, 14, 15 and 16 are schematic block diagrams of components aboard the satellite shown in Figure 11 which are employed to practice the present invention.

BEST MODE FOR CARRYING OUT THE INVENTION

Satellites & Geometry

Figures 1 and 2 show a constellation 10 of satellites 12 circling the Earth E as they travel along polar, equatorial, or inclined orbits 11. Figures 1 and 2 also depict the Equator and several Great Circles. The present invention may be practiced using only one or many satellites 12. The present invention pertains only to satellites that use satellite-fixed cells, *i.e.*, satellites that are constantly in motion with respect to the Earth. As a consequence, the orbits 11 shown in Figures 1 and 2 may be any orbit which is not an Equatorial orbit or an orbit at geosynchronous altitude. When used in this Specification and the Claims that follow, the term "orbit" refers to any trajectory of movement above the atmosphere of a celestial body, including circular and elliptical trajectories.

Figure 3 exhibits three satellites 12 moving along an orbital pathway 11 above the Earth E in a direction of travel T. When the line defining the direction of travel T in orbit is projected down onto the Earth's surface, which is rotating west to east, a continuous line is formed on the surface at the satellite's nadir N. This line is called the satellite's track T'.

Each satellite 12 includes a radiation interface 14 which is capable of transmitting and/or receiving radiated energy 15a, 15b and 15c. The term "radiated energy" pertains to any form of energy, including a signal, which is transported from one position to another. Radiated energy includes all forms of waves and particles irrespective of wavelength, including electromagnetic and optical radiation.

If the satellite 12 is a communications satellite, the radiation interface 14 comprises transmit and receive antennas. If the satellite employed to practice the present invention performs remote sensing tasks, the radiation interface 14 comprises sensors or detectors. The spacecraft may also be used to direct some beneficial transmission toward the Earth E. Examples of such transmissions may include messages from a store-and-forward telecommunication system, compressed musical works for transfer to compact disks or illuminating radiation for a resource-mapping radar.

In one of the embodiments of the invention, the satellites 12 communicate with personal, mobile and fixed terminals P, M, F and gateways G on or near the surface. The word "terminal" is intended to encompass any device capable of sending or receiving radiated energy. Terminals include gateways. While most terminals are located on the Earth, they may be near the Earth, *e.g.*, they may reside on an aircraft.

The area on the surface of the Earth that is illuminated by the radiated energy 15 emitted by a communications satellite 12 is known as the satellite's footprint 16. In the case of a remote sensing satellite, the interface 14 collects some form of radiation from an elliptical region on the surface of the Earth known as a "reception zone." A reception zone 17 defines the area at a given time which is "viewed" by a sensor aboard a satellite 12. A reception zone is substantially the same as a footprint 16, but a footprint 16 is defined by radiated energy 15 directed toward and impinging upon the Earth, while a reception zone 17 is defined by a surface on the Earth from which energy is radiated that may also be detected by a satellite at a particular instant. The footprint and reception zone boundaries are set by the radiation pattern of the radiation interface 14. The boundaries are selected by a selected roll-off of signal from a maximum value at or near the center of the footprint 16 or zone 17.

The three elliptical regions depicted in Figure 3 may be either footprints 16a, 16b and 16c or reception zones 17a, 17b and 17c.

Figure 4 exhibits a single footprint 16 containing a single elongate spanning cell 18. In accordance with the present invention, the spatial points in each footprint 16 or reception zone 17 are mapped into long strips referred to as linear spanning cells 18 by electronic transformation of the spatial points by the radiation interface. The elongate spanning cells extend across along an entire footprint 16 or reception zone 17. Each cell 18 has two parallel sides along its longest dimension and a longitudinal axis 20 halfway between its two longest sides and parallel to them. The two relatively short sides of the cell 18 are collinear with an ellipse, because the boundary of the footprint 16 or the reception zone 17 which each cell 18 spans is always an ellipse itself. The edges of the elongate spanning cells are shaped by beam shaping and steering electronics aboard the satellite 12.

A footprint 16 and any elongate spanning cells 18 within it are constantly moving across the Earth's surface as the satellite 12 which creates the footprint 16 flies across the sky overhead. The instantaneous position of an elongate spanning cell 18 relative to its footprint 16 is determined by the track T′ of the satellite 12 over the ground and by a correction angle ϕ. The correction angle is chosen to align the satellite radiation interface 14 longitudinal axis 20 with the satellite's motion over the Earth's surface. If the Earth were not turning, no correction would be needed.

Figure 4 shows the instantaneous positions of both an uncorrected and a corrected elongate spanning cell extending along a footprint 16. The uncorrected elongate spanning cell 18 is lightly shaded, and is centered along the projected line of the satellite's direction in orbit marked by reference character T. The elongate spanning cell which has been aligned by altering its position by correction angle ϕ is heavily shaded, and is centered along the line T', marked by reference character 24. The correction angle ϕ is measured at the intersection I of the satellite's track T' and the line T, the projection of the satellite's direction in orbit. For the sake of clarity, the magnitude of the correction angle ϕ has been exaggerated in Figure 4.

Figure 5 portrays a footprint 16 containing a number of linear spanning cells 18, while Figure 6 portrays both linear spanning cells 18 and multiple linear segments 22 within a footprint 16 (or reception zone 17). The multiple linear segments 22 are provided by dividing the cell 16 with additional shaped and steered beams 15. Multiple linear segments 22 add additional "space division multiple access" to the communication system. This provides more reuse of allocated frequencies, hence a larger number of users can be accommodated simultaneously.

Calculating the Correction Angle ϕ

The following discussion concerns the derivation of the appropriate correction angle ϕ based on the satellite's latitude. The derivation applies to the special case of a near-polar orbit.

If the longitudinal axis of the cell is parallel to the orbital plane of the satellite (which is fixed in space, and does not rotate with the Earth), and the Earth is turning under the satellite 12 as it proceeds in its orbit 11, from the point of view of an observer on Earth the satellite's track T' is not parallel to the lines of longitude, but lies at a small angle to them. This small angle, called the "correction angle" and represented by the variable ϕ, varies from about four degrees at the Equator to zero at the poles. A graph 200 of the correction angle ϕ 202

versus latitude 206 is presented in Figure 7. The angle ϕ reverses when the satellite 12 passes over a pole. As a result of Earth's rotation, the terminal appears to move across the cell. If the linear spanning cells 18 are one degree of latitude (about 115 km) wide, and the satellite is in a near-polar orbit with an altitude of about 700 km, the terminal will seem to move about 3/4 of the way across the cell 18 in the cell's three minute dwell time at the Equator, decreasing toward the poles. The dwell time is the period of time the satellite footprint spends on a given point on the Earth's surface.

This phenomenon will increase handoff activity, since about half of the terminals will have to change cells from this cause in their three minute dwell time. As described above, this problem can be substantially eliminated by swinging the cell pattern a few degrees in each direction during the satellite's orbit. This compensation may be accomplished using a slow mechanical movement of the antenna or an electrical means, depending on the antenna design, and is described in complete detail below.

In the equations that follow, the frame of reference is the "fixed stars", *i.e.*, a reference frame based on inertial space. The Earth is turning on its axis and satellites are moving in their orbits with respect to this frame of reference. Since the orbits of satellites of Earth move through space with the Earth's center of mass, we have assumed for convenience that the frame of reference moves with the Earth in its orbit.

The surface of the Earth E as seen from this frame of reference moves from West to East. The velocity is highest at the Equator, and decreases in proportion to the cosine of the latitude to zero at the poles. Because one nautical mile (about 6076.1 feet) is defined as one minute of longitude at the Equator, it is very convenient in the following analysis to work in nautical miles and in nautical miles per hour (knots).

The surface velocity of the Earth at a latitude L, $V_s(L)$, in knots, as seen by a distant observer in the reference frame is always from West to East, and is given by Equation One:

$$V_s(L)=\frac{360x60}{24}\cos(L) \qquad \textit{(Equation One)}$$

Where L is the latitude in degrees of the point on the Earth's surface at which the velocity is being measured.

A graph 214 of the Earth's surface velocity 216 as a function of North or South latitude 218 as shown in Figure 8.

In the simple case of a circular polar orbit, an orbit of constant altitude which passes over both the North Pole and the South Pole, the motion of the satellite is always at right angles to the motion of the Earth's surface, and, assuming a spherical Earth, the orbital period is the time it takes for the satellite to travel completely around the Earth, may be found using Equation Two:

$$\tau = \frac{2\pi}{60}\sqrt{\frac{(r_e + h)^3}{GM}} \qquad \textit{(Equation Two)}$$

Where τ is the period of orbit;

r_e is the radius of the Earth, *i.e.*, 6378.165 km;

h is the orbital altitude in km; and

GM is the Earth's mass times the gravitational constant, $G=Km^3s^{-2}$; GM=398,603.2.

For a satellite 12 in low Earth orbit at 700 km, τ=98.773 minutes. (This is the orbital period, *i.e.*, the times it takes for the satellite to travel completely around the Earth.)

The orbital velocity of a satellite in a circular orbit is given by Equation Three:

$$V_o = 360\frac{60x60}{\tau} \qquad \textit{(Equation Three)}$$

For a satellite in a 700 km orbit, the orbital velocity is then $V_o=1.312x10^4$ knots.

The motion of the satellite's nadir across the surface of the Earth is the vector sum of the satellite's velocity and the Earth's surface velocity. At any given latitude, the angle at which the Earth's surface is moving with respect to the direction of the satellite's motion in the inertial reference frame is the angle portion of that vector sum. If the satellite 12 is moving Northward in its orbit, and the orbit is at a small angle to the Earth's axis, the Earth's surface will move from left to right below the satellite, and to fit that motion, the satellite's radiation pattern must be aligned in a Northwest-Southeast direction. As the satellite approaches the North Pole, the necessary angle of the correction decreases, and is zero when directly over the North Pole NP. As the satellite proceeds Southward, the correction angle must swing to the satellite's right, to a Southwest-Northeast alignment, since West is now on the satellite's right. The correction angle reaches a maximum as the satellite crosses the Equator. The angle then decreases to zero as the satellite crosses the South Pole SP, reversing to a Northwest-Southeast alignment after the South Pole SP is crossed.

The discussion presented below utilizes the navigator's convention that True North is zero degrees, with the direction angle increasing as direction changes toward the East. In other words, the angle of direction changes from zero degrees through 360 degrees as the compass needle moves clockwise from the starting point of True North.

The correction angle, $\phi(L)$, which is the angle of the motion of the Earth's surface with respect to the satellite at latitude L, may be determined using Equation Four:

$$\phi(L)=90-i-\arctan\frac{V_s L(\omega)}{V_o} \qquad \textit{(Equation Four)}$$

Where V_o is the orbital velocity of the satellite;

i is the orbital inclination, *i.e.*, the angle measured between the plane containing the satellite's orbit and the plane containing the Earth's Equator;

ω is the argument of perigee, *i.e.*, the satellite's orbital position as given by the number of degrees of a 360-degree orbit it has traveled since crossing the Equator in a Northbound direction; and

$L(\omega)$ is the latitude of the satellite at argument of perigee ω. $L(\omega)$ is equal to ω for satellites in polar orbits, for a value of ω of ninety degrees or less.

The graph 200 presented in Figure 7 was generated using a value of i of ninety degrees, which corresponds to a "pure" polar orbit. In the case of a polar orbit, the latitude of the satellite's nadir is the same as its orbital position. Consequently, for the special case of a satellite in polar orbit, $L(\omega)=\omega$ from the Equator to the North Pole.

For this polar orbit, the correction angle varies as the satellite 12 makes one complete orbit as shown in Figure 7. This figure presents data for a Northbound satellite in a circular polar orbit starting at the Equator (latitude= 0 degrees, ω= 0 degrees), proceeding Northward to the North Pole (latitude= 90 degrees, ω= 90 degrees), then Southward to the Equator (latitude again 0 degrees, ω= 180 degrees), continuing Southward to the South Pole (latitude= -90 degrees, ω= 270 degrees), and finally Northward again to the Equator (latitude= 0 degrees, ω= 0 degrees). Negative angles indicate motion to the left of the satellite as it proceeds in its orbit, while positive angles indicate motion to the right.

For a satellite in an inclined orbit, the satellite's nadir never reaches the pole, so that the maximum latitude is less than ninety degrees. The latitude of the nadir can be found at any moment from Equation Five:

$$\sin(L)=\sin(i)*\sin(f+\omega) \qquad \textit{(Equation Five)}$$

where L is the latitude of the nadir;

i is the inclination of the orbit;

f is a very small anomaly which may be ignored for the purposes of this calculation; and

ω is the argument of perigee of the satellite.

The graph 208 depicted in Figure 9 is based on Equation Five and plots the latitude of nadir 210 versus the argument of perigee 212 for a satellite in an inclined orbit.

Using the Correction Angle ϕ to Point the Satellite Antenna:

A Preferred Method Employing a GPS Receiver

Once the correction angle ϕ has been determined, the correct angle of the radiation interface 14, which may be an antenna 34, with respect to the body of the satellite 12 must be ascertained. Other information that is required includes the relative speed and direction of the satellite, and the direction of the Earth's surface at the nadir.

The preferred method of acquiring the needed information employs a navigation receiver on the satellite 12 which receives and interprets the signals of the Global Positioning System (GPS). Such receivers are readily available from a number of manufacturers. Thousands of personal versions of GPS receivers are produced each month by companies such as Magellan™ and Garmin™. Space-qualified versions are produced by companies such as Interstate Electronics™, Motorola™ and Rockwell International™. These receivers provide continuous information on their position with respect to the Earth's surface, already corrected for the Earth's motion, and all such receivers either provide, or can readily be adapted to provide, an output signal which gives a continuous value of the receiver's speed and direction with respect to the Earth's surface. The satellite 12 which is used to implement the present invention will include attitude sensing and stabilization mechanisms that supply an output signal which give a continuous value of the receiver's speed and direction with respect to the Earth's surface. Other systems on board the satellite 12 will contain attitude sensing and stabilization mechanisms which furnish an output signal proportional to the orientation of the satellite's structure with respect to its direction of motion. These two signals can be added or subtracted to give a signal directly proportional to the relative angle of the satellite's body to the satellite's direction of motion over the Earth's surface T'. The antenna can then easily be rotated by a conventional servo-mechanism to place its long axis in line with that direction of motion.

Figure 10 is a schematic depiction of a satellite 12 in a ten day polar orbit. The track of the satellite on the ground appears as a spiral T'.

Figure 11 reveals one of many satellite designs that may be utilized to realize the benefits of the present invention. The satellite 12 comprises a body 30, a solar array 32 and an antenna 34 which includes a narrow reflector with a parabolic cross-section. The internal components of the satellite 12 include an inertia wheel 36, an antenna positioning servo 38 and a radio-frequency feed to antenna 39.

Figures 12 and 13 are schematic block diagrams 39 and 45 depicting generalized groups of electronic circuits aboard the satellite 12. Figure 12 shows a GPS receiver 100 which produces an output that includes an altitude and latitude signal 40. This signal is fed to a converter 42 which, in turn, produces a control signal 44 that governs the action of an antenna positioning servo 38. The GPS receiver 100 is described in great detail in the text which follows and in Figure 16.

Figure 13 shows an alternative circuit that includes a radio receiver 46 which produces a synchronizing pulse 48 that is fed to timers 50. The timers 50 generate an elapsed time code 52 which is supplied to a converter 54. The converter emits a control signal 56 which directs the action of an antenna positioning servo 38.

Figure 14 is a schematic block diagram 57 that portrays the GPS receiver 100 and accompanying electronic components in greater detail. The GPS receiver 100 generates two digital signals. The first signal comprises a number which is the speed of the satellite over the Earth's surface, and an angle which is the angle between the satellite's velocity and the underlying meridian of longitude. These quantities are components of the satellite's velocity vector, represented as box 62 in Figure 14. The second digital signal is the latitude of the satellite's nadir, shown as box 64 in Figure 14.

A microprocessor 66 receives these two signals 62 and 64 from receiver 100, in addition to the angle of the satellite's longitudinal axis with respect to the Earth's axis 60 which is supplied by an attitude sensor 58. The microprocessor 66 multiplies the vector constant equal to the surface velocity of the Earth's Equator by the cosine of the latitude. This product yields the vector of the surface velocity at the satellite's nadir, V_n. The microprocessor 66 also calculates the resultant of the satellite velocity vector and the surface vector V_n. The angle portion of this resultant, corrected by the angle of the satellite's longitudinal axis with the Earth's axis, is the beam offset angle 68. This beam offset angle 68 is fed to a servo-mechanism 38, which rotates the antenna array 34 so that its long dimension makes the beam offset angle 68 with the direction of the satellite's motion.

Figure 15 offers another schematic block diagram 71 that is specifically designed for use with satellites 12 that travel in circular orbits at a constant altitude. A radio receiver 46, a star tracker 72 or a GPS receiver 100 may be utilized to generate an Equator-crossing pulse 74 which resets a timer 76. The timer 76 sends a "time since crossing" (τ_c) signal 78 to a function generator 80. The τ_c signal 78 is proportional to the time that has elapsed since the satellite 12 crossed the Equator. The function generator 80 includes a memory which stores a quantity $\tau_{½}$, which is the time it takes the satellite to complete one half of its orbit around the globe, and also stores the satellite's velocity vector. The function generator output is equal to the angle of the satellite's apparent motion over the Earth's surface, taking into account the surface velocity of the Earth at the satellite's nadir. The surface velocity, V', is the velocity at the Equator, V, in Equation Six:

$$V' = V\cos L \qquad \textit{(Equation Six)}$$

where L is the latitude at the satellite's nadir.

The latitude in this case can be set equal to:

$$180\frac{\tau_c}{\tau_{½}}\phi \qquad \textit{(Equation Seven)}$$

since the cosine function interprets angles over ninety degrees. An adder 84 algebraically sums the correction angle from the function generator's output with the actual offset of the satellite's longitudinal axis with respect to

the Earth's axis 82 and its direction of motion with respect to the Earth's axis. The result is the beam offset angle 86, which is used to a control servo-mechanism 38 that points the satellite antenna 34.

Figure 16 is a schematic block diagram 100 of the internal components and functions of a GPS receiver. In general, the GPS receiver is a superheterodyne with a voltage-controlled local oscillator. The existing constellation of GPS satellites use a code-division modulation scheme (like CDMA), which allows all of the GPS satellites to use the same bandwidth segment. Signals from different GPS satellites are detected by matching them with a code that is peculiar to each satellite. This function is performed by an active detector 112, which receives an input from an antenna 102 through a low-noise amplifier 104, a mixer 106, a band-pass filter 108 and an intermediate frequency amplifier 110.

A satellite selector 118 uses an algorithm to pick a set of GPS satellites, usually four, which are in view and whose positions are widely-enough spaced to provide a good navigation solution. The satellites chosen by the selector 118 are indicated by arrow 120 in Figure 16. The satellite selector 118 bases its selection on satellite position information from the almanac memory 132 and a present-time signal 126 from the local clock 124. The local clock 124 is connected to a temperature-compensated crystal oscillator ("TXCO") 125. All the internal timing signals used in the GPS satellite are derived from the TXCO 125. The selector 118 then passes the satellite's identity to the code generator 122, which generates the appropriate code for the desired satellite. This code is shifted in phase with respect to the local clock 124 until it matches the received signal code as determined by the active detector 112. This condition is maintained by a code tracking control loop 123.

Since the GPS satellites are moving rapidly, the satellite selector 118 also calculates the frequency offset 116 of each satellite due to Doppler shift, and adjusts a local oscillator 114 to place the satellite's signal in the receiver's passband.

The detected signal from the satellite is a bitstream which contains a fragment of the almanac 132, the satellite's ephemerides 134, a health bit 128 and another administrative information, and very precise time marks. This bitstream is separated into its components by a signal decoder 130.

A GPS satellite orbit calculator 136 uses the almanac 132 and ephemeride 134 information and Kepler's equations to calculate the position 138 of each chosen GPS satellite in its orbit with a precision of a few meters. This information is transmitted to the satellite selector 118 and to the navigation microprocessor 140.

The navigation microprocessor 140 receives a timing signal from the local clock 124 and a timing signal from each satellite for each chosen satellite. Since the speed of radio signals is a known constant, the navigation computer 140 can calculate the distance to each chosen satellite. Because the local clock 124 is not highly accurate, these ranges are in error, and are called "pseudo-ranges." These pseudo-ranges are measured utilizing the code phase shift 127 provided by the code generator 122 over loop 123.

If four satellites were chosen by the selector 118, the navigation computer 140 has four pseudo-ranges. If, however, the ranges were accurate, three would be sufficient to find an exact position. To find an exact solution, the computer solves a system of four equations in four unknowns: latitude 142, longitude 146, altitude 144 and the local clock error. The result is a position 142, 144 & 146 and precise time 148 output. The algorithms used in these calculations make allowance for the Earth's rotation, so that the position found is a point on the Earth's surface.

In a commercial GPS receiver, positions are generated frequently, usually at intervals of a second or less. The receiver utilizes the most recent two or three positions and their associated times to calculate speed and direction of motion with respect to the Earth's surface. This task is accomplished in the speed and course computer 150.

The speed and course output 152 can be combined with knowledge of the orientation of the body of the satellite to its direction of motion, which is derived from an attitude computer 154, to determine the appropriate pointing angle 156 of the antenna 34.

Alternatively, two GPS receivers 100 and 158 can be employed, separated by several feet on the satellite's structure. The satellite's attitude and any rotation of its structure can be then be determined by comparing the positions of the two receivers 100 and 158.

Alternative Methods of Pointing the Satellite Antenna

In an alternative embodiment of the invention, the satellite 12 is furnished with information describing its velocity with respect to the Earth's surface from an Earth-based radar system. This information can be combined with information from the satellite's attitude-sensing equipment to generate an antenna pointing signal.

Another alternative utilizes circuits aboard the satellite 12 that generate a continuous relative-velocity signal. An on-board computer is used to continuously solve Kepler's equations for the satellite's orbit and adds the Earth's motion, derived from the latitude of the nadir as calculated above. The computer is updated periodically by an Earth-based signal which provides the ephemerides of the satellite's orbit from radar or visual observations.

Yet another alternative incorporates a method that is useful for a satellite in a stabilized circular orbit. A device onboard the satellite is programmed with the equation of its fixed orbit. The output signal of the device is the relative velocity and angle of the satellite's course over the Earth's surface. The device receives synchronizing pulses periodically (as a practical matter, as infrequently as monthly for some orbits) from radar or visual sightings. The resulting information, which for such an orbit repeats itself each orbit and which in principle can be generated by a mechanism as simple as a cam, can be used to point the satellite antenna.

Comparison with Prior Inventions

The dwell time of a terminal in an elongate spanning cell is on the order of two to eight times longer for the present invention than the time a terminal would reside in a cell of Jan et al. as shown in U.S. Patent No. 5,268,694. This comparison was calculated with reference to Jan's description in Column 3, Lines 55-60 and to Figure 2 for a footprint diameter = 4,075 km, a satellite velocity = 25,000 km/hr, approximately eight Jan cells along the footprint diameter, and a cell diameter of approximately 4,075/8 = 500 km. The time of dwell of a Jan et al. cell on a terminal is 500 x 60/25,000 = 1.2 minutes. Using the same orbital parameters, the time of dwell of cell of the present invention on a terminal is 4,075 x 60/25,000 = 10 minutes. The cells of the present invention when divided into four elongate segments, have a dwell time of 10/4 = 2.5 minutes. A comparison of time of dwell with the cell of the present invention and Rouffet is not meaningful, since Rouffet's beams are made to hop around within the footprint to prevent interference between user terminals operating on the same frequency.

CONCLUSION

Although the present invention has been described in detail with reference to particular preferred and alternative embodiments, persons possessing ordinary skill in the art to which this invention pertains will appreciate that various modifications and enhancements may be made without departing from the spirit and scope of the Claims that follow. The various orbital parameters and satellite designs that have been disclosed above are intended to educate the reader about particular embodiments, and are not intended to constrain the limits of the invention or the scope of the claims. The *List of Reference Characters* which follows is intended to provide the reader with a convenient means of identifying elements of the invention in the Specification and Drawings. This list is not intended to delineate or narrow the scope of the Claims.

INDUSTRIAL APPLICABILITY

The *Cellular Satellite System* described above will enhance the ability of satellite communication systems, particularly those availing satellite fixed cell techniques, to carry higher message traffic volumes from a greater number of users. It can be seen that by pointing the satellite radiation interface 14 to maintain the elongate spanning cells 18 in alignment with the satellite's track T' over the Earth's surface, a terminal P,M,G in the satellite's track T' remains (dwells) within an elongate spanning cell 18 for approximately the entire time the satellite footprint 16 passes over the terminal P,M,G. The dwell time of a terminal P,M,G within the track-aligned, elongate spanning cell 18 is many times longer than the dwell time of a terminal P,M,G in a hexagonal, circular or elliptical shaped satellite-fixed cell created by known satellites in comparable orbits. Even when the elongate spanning cell 18 is subdivided into multiple linear segments 22, a terminal P,M,G dwells for more than two times longer than in a satellite-fixed cell created by known satellites in comparable orbits. This feature saves time to access a satellite by reducing the number of hand-offs as the satellite-fixed cells 16 sweep over a terminal P,M,G. Saving time augments frequency re-use, and thereby enhances the communications and sensing capacity of the satellite 12 resulting in economic benefit to the users and proprietors of the system.

LIST OF REFERENCE CHARACTERS

10	Constellation
11	Orbit
12	Satellite
14	Radiation interface
15a, 15b, 15c	Radiated energy
16a, 16b, 16c	Footprint formed on Earth
17a, 17b, 17c	Reception zone
18	Elongate spanning cells
20	Longitudinal axis of elongate spanning cell
22	Multiple elongate segments
24	Corrected position of longitudinal axis
30	Satellite body
32	Solar array
34	Parabolic reflector
36	Inertia wheel
38	Antenna positioning servo
39	Radio-frequency feed to antenna
40	Altitude and latitude signal
42	Converter
44	Control signal
46	Radio receiver
48	Synchronizing pulse
50	Timers
52	Elapsed time code
54	Converter
56	Control signal
58	Attitude sensor
60	Angle of satellite longitudinal axis with Earth's axis
62	Satellite velocity vector
64	Latitude
66	Microprocessor
68	Beam offset angle
72	Star tracker
74	Equator-crossing pulse
76	Timer

78	Time since crossing
80	Function generator
82	Angle of satellite longitudinal axis with Earth's axis
84	Adder
86	Beam offset angle
100	Global Positioning Satellite receiver
102	Receiver antenna
104	Low noise amplifier
106	Mixer
108	Bandpass filter
110	Intermediate frequency amplifier
112	Active detector
114	Local oscillator
116	Doppler offset
118	Satellite selector
120	Chosen satellite number
122	Code generator
123	Code tracking control loop
124	Local clock
125	Temperature-compensated crystal oscillator
126	Time signal
127	Code phase shift
128	Health information
130	Signal decoder
132	Almanac memory
134	Ephemeride memory
136	GPS satellite orbit calculator
138	Positions of all GPS satellites
140	Navigation microprocessor
142	Latitude
144	Altitude
146	Longitude
148	Precise time
150	Speed and course computer
152	Speed and course
154	Attitude computer
156	Antenna angle

158	Second receiver
200	Graph of correction angle versus latitude
202	Correction angle
204	Argument of perigee
206	Latitude
108	Graph of latitude of nadir versus argument of perigee
210	Latitude of nadir
212	Argument of perigee
214	Graph of surface velocity of Earth versus North or South latitude
216	Surface velocity of the Earth
218	North or South latitude
E	Earth
F	Fixed terminal
G	Gateway
GC	Great circle
M	Mobile terminal
N	Nadir
NP	North Pole
P	Portable terminal
SP	South Pole
T	Direction of travel of satellite
T'	Track of satellite on ground
ϕ	Compensation angle

CLAIMS

What is claimed is:

1. A method for controlling at least the transmission of a beam of radiated energy (15a, 15b, 15c) to a terminal (P,M,F,G) from a position above the Earth (E) comprising the steps of:

operating a satellite (12) in an Earth orbit (11);

said satellite (12) flying in a direction (T) having a track (T') with respect to a point on the Earth's surface while flying in a direction (T) at an altitude above the Earth (E) which is not an Equatorial geosynchronous altitude;

said satellite (12) having a radiation interface (14);

said radiation interface (14) being capable of transmitting said beam of radiated energy (15a, 15b, 15c) to said terminal (P,M,F,G);

forming a footprint (16a, 16b, 16c) using said radiation interface (14) which is capable of transmitting said beam of radiated energy (15a, 15b, 15c) to said terminal (P,M,F,G);

partitioning said footprint (16a, 16b, 16c) into at least one elongate spanning cell (18);

said elongate spanning cell (18) extending along entire said footprint (16a, 16b, 16c); and having a longitudinal axis (20); and

directing said beam of radiated energy (15a, 15b, 15c) to said elongate spanning cell (18) in said footprint (16a, 16b, 16c);

characterised in that the method comprises aligning said longitudinal axis (20) of said elongate spanning cell (18) continually generally parallel to said track (T') of said satellite (12) on the Earth's surface.

2. A method for controlling at least the reception of radiated energy (15a, 15b, 15c) at a position above the Earth (E) comprising the steps of:

operating a satellite (12) in an Earth orbit (11);

said satellite (12) having a track (T') with respect to a point on the Earth's surface while flying in a direction (T) at an altitude above the Earth (E) which is not an Equatorial geosynchronous altitude;

said satellite (12) having a radiation interface (14);

said radiation interface (14) being capable of receiving radiated energy (15a, 15b, 15c);

mapping a reception zone (17a, 17b, 17c) on the Earth's surface using said radiation interface (14);

said reception zone (17a, 17b, 17c) containing all positions from which radiated energy (15a, 15b, 15c) may be received by said radiation interface (14) aboard said satellite (12) at a particular instant of time;

partitioning said reception zone (17a, 17b, 17c) into at least one elongate spanning cell (18);

said elongate spanning cell (18) extending along entire said reception zone (17) and having a longitudinal axis (20); and

directing said beam of radiated energy (15a, 15b, 15c) to said elongate spanning cell (18) in said reception zone (17a, 17b, 17c);

characterised in that the method comprises aligning said longitudinal axis (20) of said elongate spanning cell (18) continually generally parallel to said track (T') of said satellite (12).

3. A method in accordance with claim 1 or 2, wherein each elongate spanning cell (18) has two long sides substantially parallel to said longitudinal axis (20) whereby to constitute a linear spanning cell.

4. A method in accordance with any preceding claim, further comprising the step of:

dividing said spanning cell (18) into multiple segments (22) mutually located along the direction of said longitudinal axis (20); and

directing said beam of radiated energy (15a, 15b, 15c) to each of said multiple segments (22) in said spanning cell (18).

5. A method in accordance with any preceding claim, in which the step of continually aligning said longitudinal axis (20) of said spanning cell (18) includes:

correcting the alignment of said spanning cell (18) by shifting the position of said longitudinal axis (20) to a corrected position (24) by an angle having a value ϕ:

said value ϕ being measured between the projection of the track (T') of said satellite (12) on the Earth's surface and a Great Circle (GC) on the Earth's surface;

said Great Circle (GC) containing a projection of the direction (T) of the satellite orbit (11) and the nadir (N) of the position of said satellite (12);

such that the alignment of said spanning cell (18) is compensated for the changing relative motion of the Earth's surface at various latitudes.

6. A method in accordance with claim 1 or 2, further comprising the step of:

configuring the position of said radiation interface (14) to be continually generally aligned parallel to the relative motion of the Earth's surface, the track (T') of said radiation interface (14) over the surface of the Earth being generally a spiral.

7. A system for controlling at least the transmission of a beam of radiated energy (15a, 15b, 15c) from a satellite to a terminal (P,M,F,G) from a position above the Earth (E) comprising:

a satellite (12) in an Earth orbit (11);

said satellite (12) flying in a direction (T) having a track (T') with respect to a point on the Earth's surface while flying in a direction (T) at an altitude above the Earth (E) which is not an Equatorial geosynchronous altitude;

said satellite (12) having a radiation interface (14);

said radiation interface (14) being capable of transmitting said beam of radiated energy (15a, 15b, 15c) to said terminal (P, M, F, G); said radiation interface (14) having a footprint (16a, 16b, 16c) on the Earth's surface;

said terminal (P, M, F, G) lying within said footprint (16a, 16b,16c);

said satellite (12) also having beam control means for partitioning said footprint (16a, 16b, 16c) into at least one elongate spanning cell (18);

said elongate spanning cell (18) extending along entire said footprint (16a, 16b, 16c) and having a longitudinal axis (20);

means for directing said beam of radiated energy (15a, 15b, 15c) to said elongate spanning cell (18) in said footprint (16a, 16b, 16c); and

characterised in that the system comprises means for aligning said longitudinal axis (20) of said elongate spanning cell (18) continually generally parallel to said track (T') of said satellite (12) on the Earth's surface.

8. A system according to claim 7, wherein said beam control means operates such that each elongate spanning cell (18) has two long sides substantially parallel to said longitudinal axis (20) whereby to constitute a linear spanning cell.

9. The satellite system in accordance with claim 7 or 8, comprising means for further dividing said elongate spanning cell (18) into multiple segments (22) mutually located along the direction of said longitudinal axis (20);

and means for directing said beam of radiated energy (15a, 15b, 15c) to said terminals (P, M, F, G) within each of said multiple segments (22) in said spanning cell (18).

10. The satellite system in accordance with any of claims 7 to 9, in which:

said means for aligning operates by shifting the position of said longitudinal axis (20) to a corrected position (24) by an angle having a value ϕ;

said value ϕ being measured between the projection of the track (T') of said satellite (12) on the Earth's surface and a Great Circle (GC) on the Earth's surface;

said Great Circle (GC) containing a projection of the direction (T) of the satellite orbit (11) and the nadir (N) of the position of said satellite (12);

such that the alignment of said spanning cell (18) is compensated for the changing relative motion of the Earth's surface at various latitudes.

11. The satellite system in accordance with claim 10, in which the angle ϕ is the angle of which the value is 90 degrees minus orbital inclination angle (i) minus arctangent surface velocity (V_s) at a given latitude ($L(\omega)$) divided by orbital velocity (V_o).

12. The satellite system in accordance with claim 7, in which means are provided for continually generally aligning the position of said radiation interface (14) parallel to the relative motion of the Earth's surface, the track (T') of said radiation interface (14) on the surface of the Earth generally forming a spiral thereon.

13. A system for controlling at least the reception of a beam of radiated energy (15a, 15b, 15c) to a satellite from a terminal (P,M,F,G) from a position above the Earth (E) comprising:

a satellite (12) in an Earth orbit (11);

said satellite (12) flying in a direction (T) having a track (T') with respect to a point on the Earth's surface while flying in a direction (T) at an altitude above the Earth (E) which is not an Equatorial geosynchronous altitude;

said satellite (12) having a radiation interface (14);

said radiation interface (14) being capable of receiving said beam of radiated energy (15a, 15b, 15c) from said terminal (P,M F,G); said radiation interface (14) having a footprint (16a, 16b, 16c) on the Earth's surface;

said terminal (P,M,F,G) lying within said footprint (16a, 16b,16c);

said satellite (12) also having beam control means for partitioning said footprint (16a, 16b, 16c) into at least one elongate spanning cell (18);

said elongate spanning cell (18) extending along entire said footprint (16a, 16b, 16c) and having a longitudinal axis (20);

means for pointing toward said beam of radiated energy (15a, 15b, 15c) received from said terminal (P,M,F,G) in said elongate spanning cell (18) in said footprint (16a, 16b, 16c); and

characterised in that the system comprises means for aligning said longitudinal axis (20) of said elongate spanning cell (18) continually generally parallel to said track (T') of said satellite (12) on the Earth's surface.

14. A system according to claim 13, wherein said beam control means operates such that each elongate spanning cell (18) has two long sides substantially parallel to said longitudinal axis (20) whereby to constitute a linear spanning cell.

15. The satellite system in accordance with claim 13 or 14, comprising means for further dividing said elongate spanning cell (18) into multiple segments (22) mutually located along the direction of said longitudinal axis (20);

and means for pointing toward said beam of radiated energy (15a, 15b, 15c) received from said terminals (P,M,F,G) within each of said multiple segments (22) in said spanning cell (18).

16. The satellite system in accordance with any of claims 13 to 15, in which:

said means for aligning operates by shifting the position of said longitudinal axis (20) to a corrected position (24) by an angle having a value ϕ;

said value ϕ being measured between the projection of the track (T') of said satellite (12) on the Earth's surface and a Great Circle (GC) on the Earth's surface;

said Great Circle (GC) containing a projection of the direction (T) of the satellite orbit (11) and the nadir (N) of the position of said satellite (12);

such that the alignment of said spanning cell (18) is compensated for the changing relative motion of the Earth's surface at various latitudes.

17. The satellite system in accordance with claim 16, in which the angle ϕ is the angle of which the value is 90 degrees minus orbital inclination angle (i) minus arctangent surface velocity (V_s) at a given latitude ($L(\omega)$) divided by orbital velocity (V_o).

18. The satellite system in accordance with claim 13, in which means are provided for continually generally aligning the position of said radiation interface (14) parallel to the relative motion of the Earth's surface, the track (T') of said radiation interface (14) on the surface of the Earth generally forming a spiral thereon.

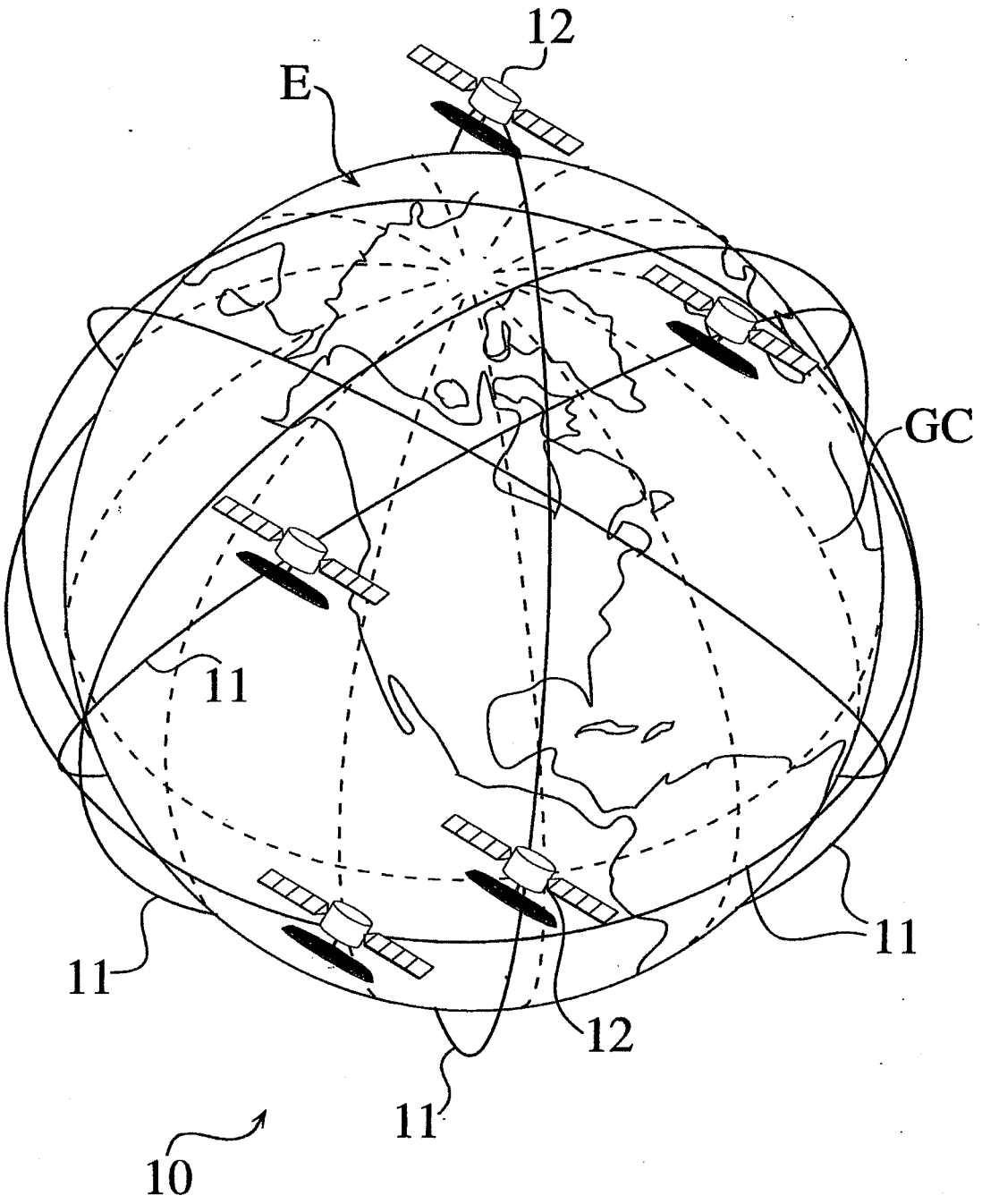

Fig. 1

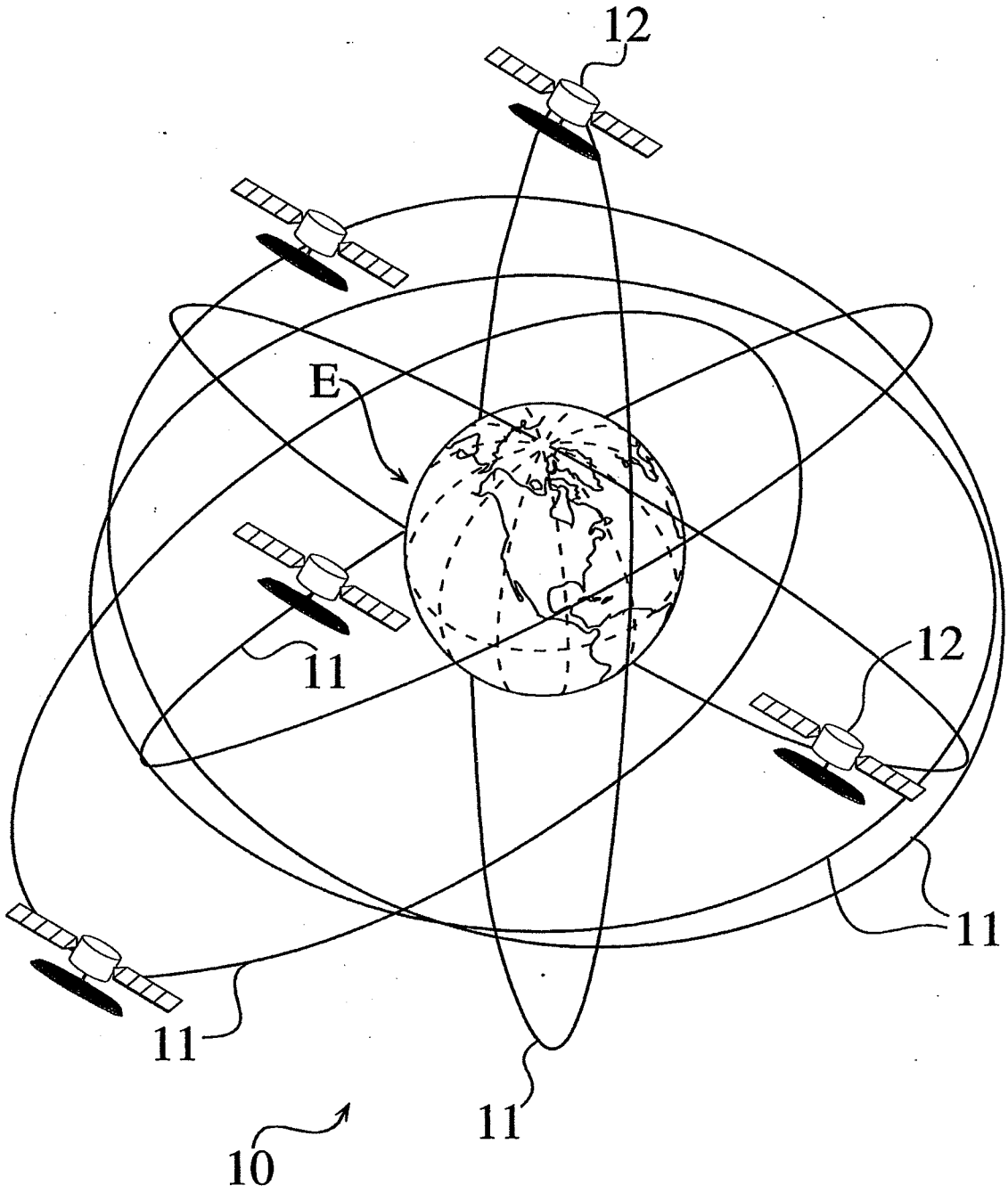

Fig. 2

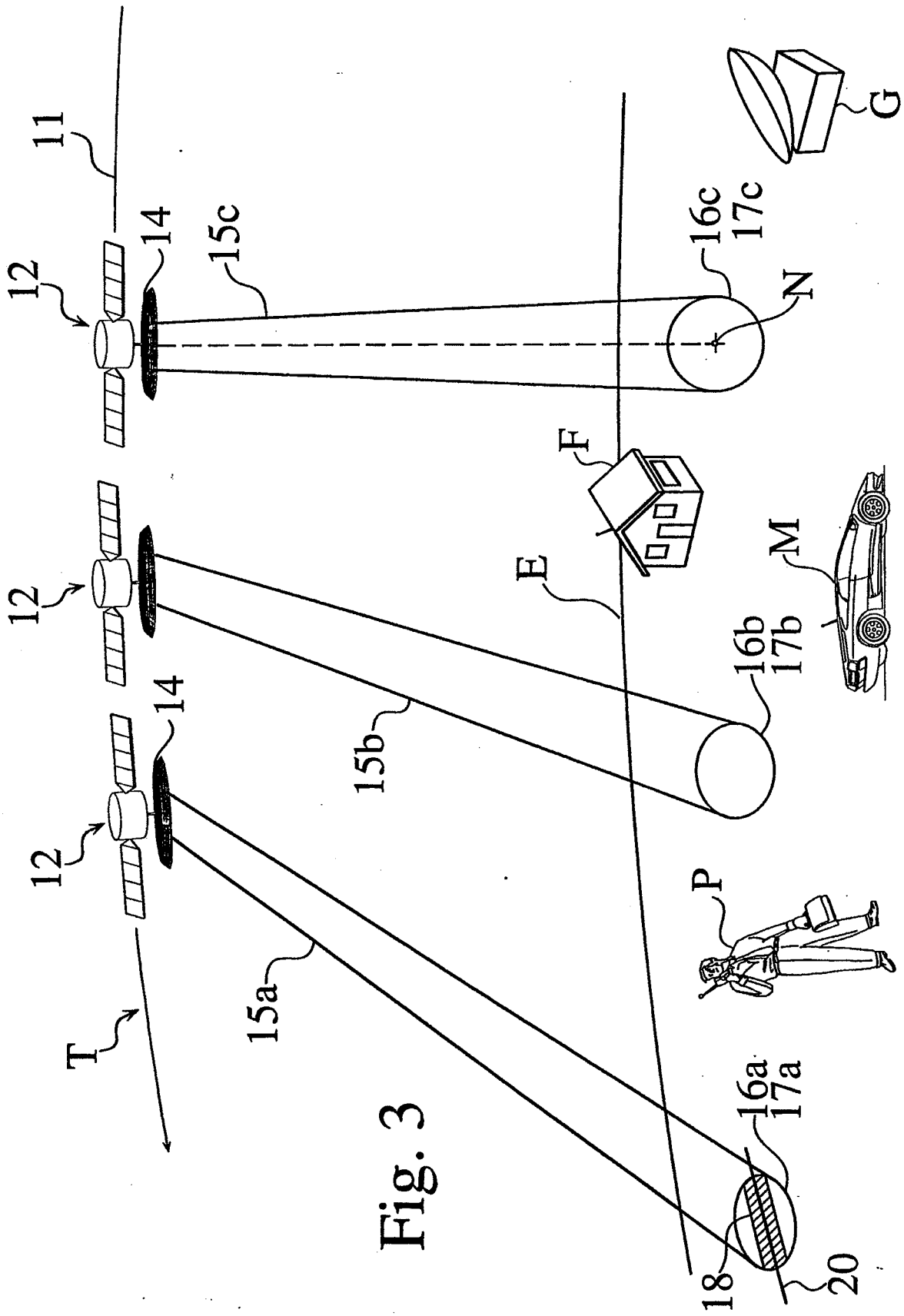

Fig. 3

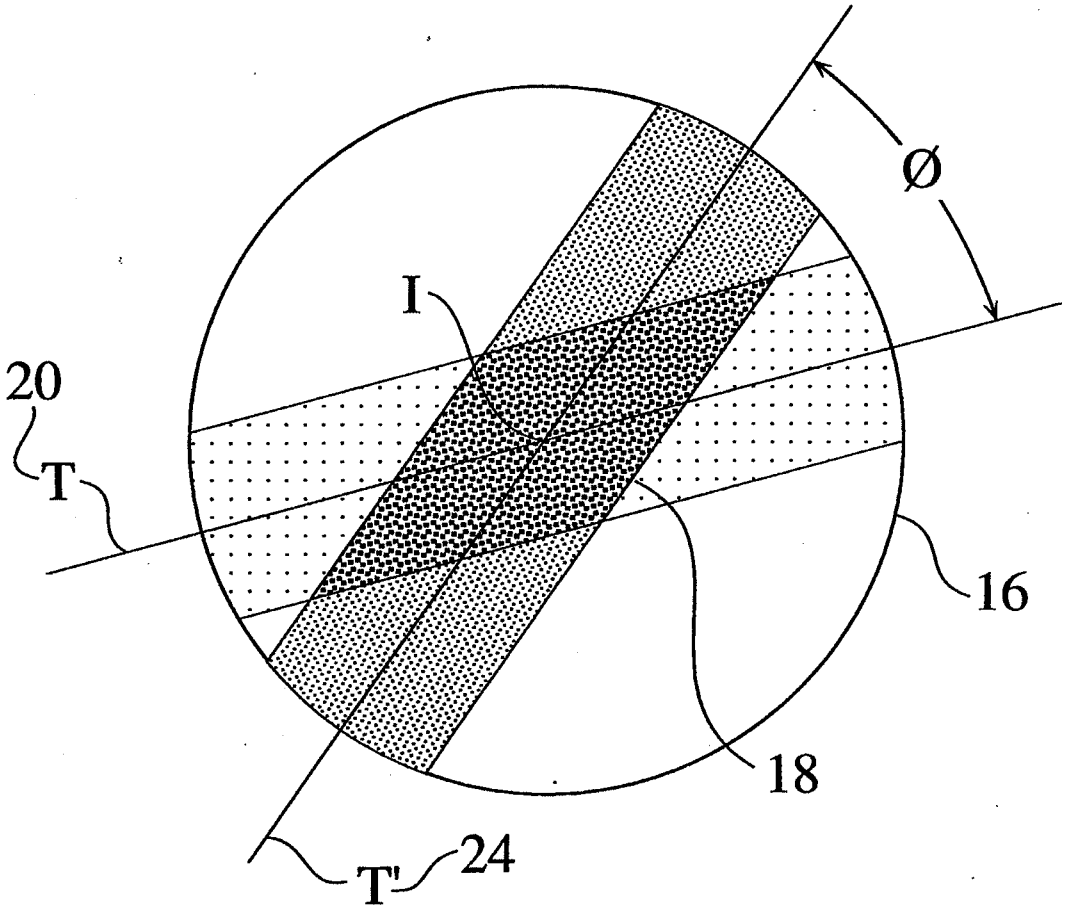

Fig. 4

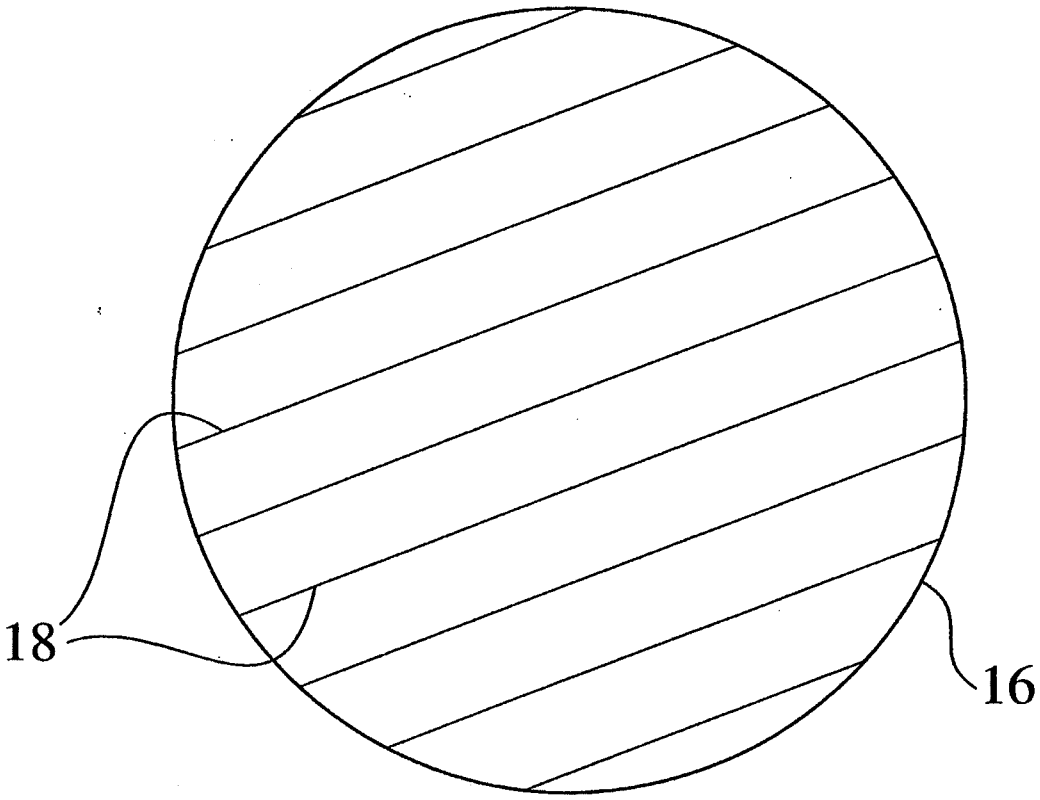

Fig. 5

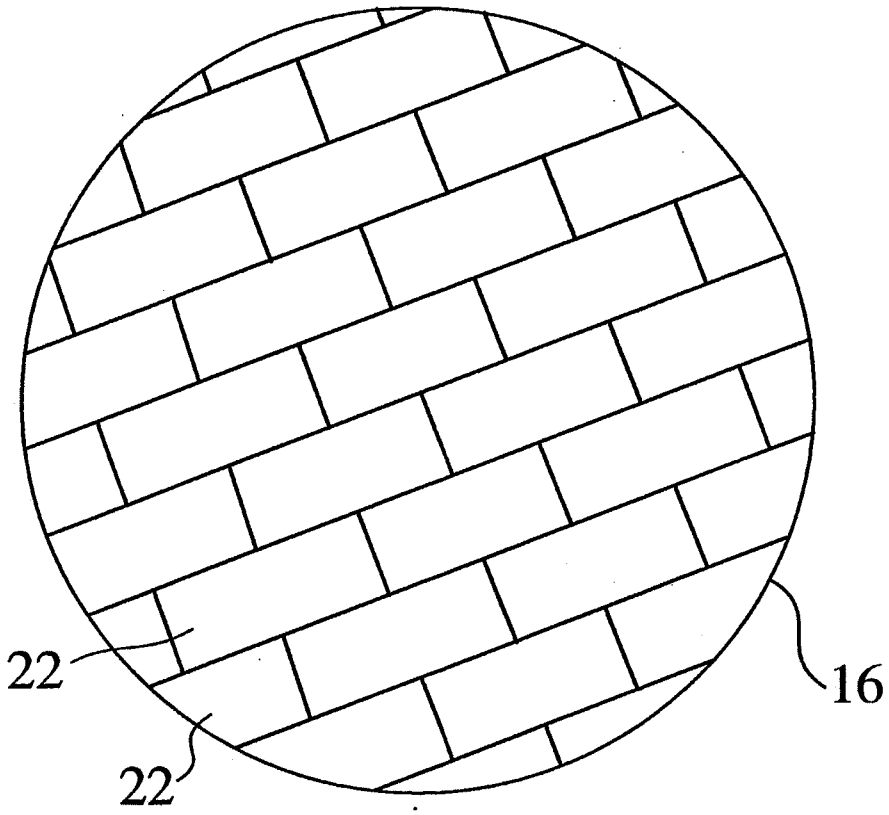

Fig. 6

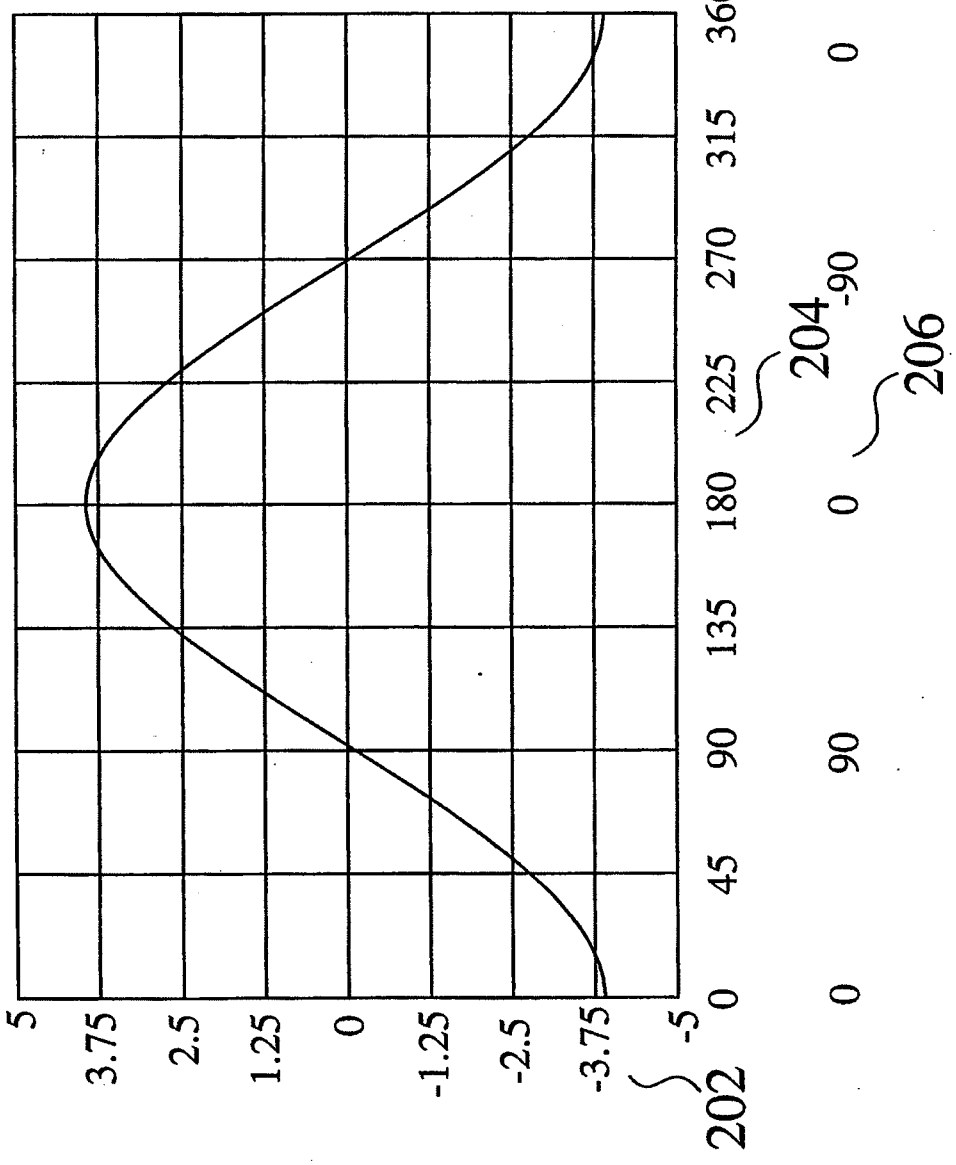
200
5
3.75
2.5
1.25
0
-1.25
-2.5
-3.75
-5
202
0
45
90
135
180
225
270
315
360
0
90
0
-90
0
204
206

Fig. 7

Fig. 8

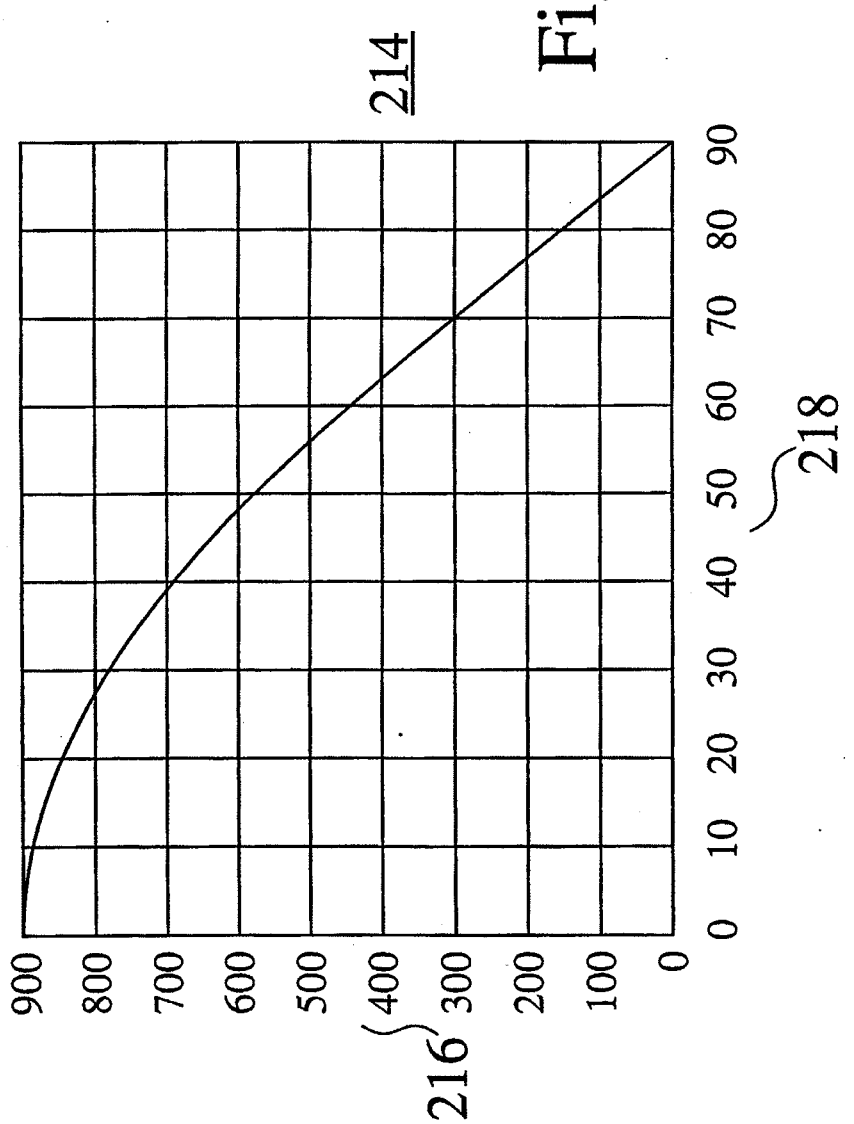
214
900
800
700
600
500
400
300
200
100
0
216
0
10
20
30
40
50
60
70
80
90
218

Fig. 9

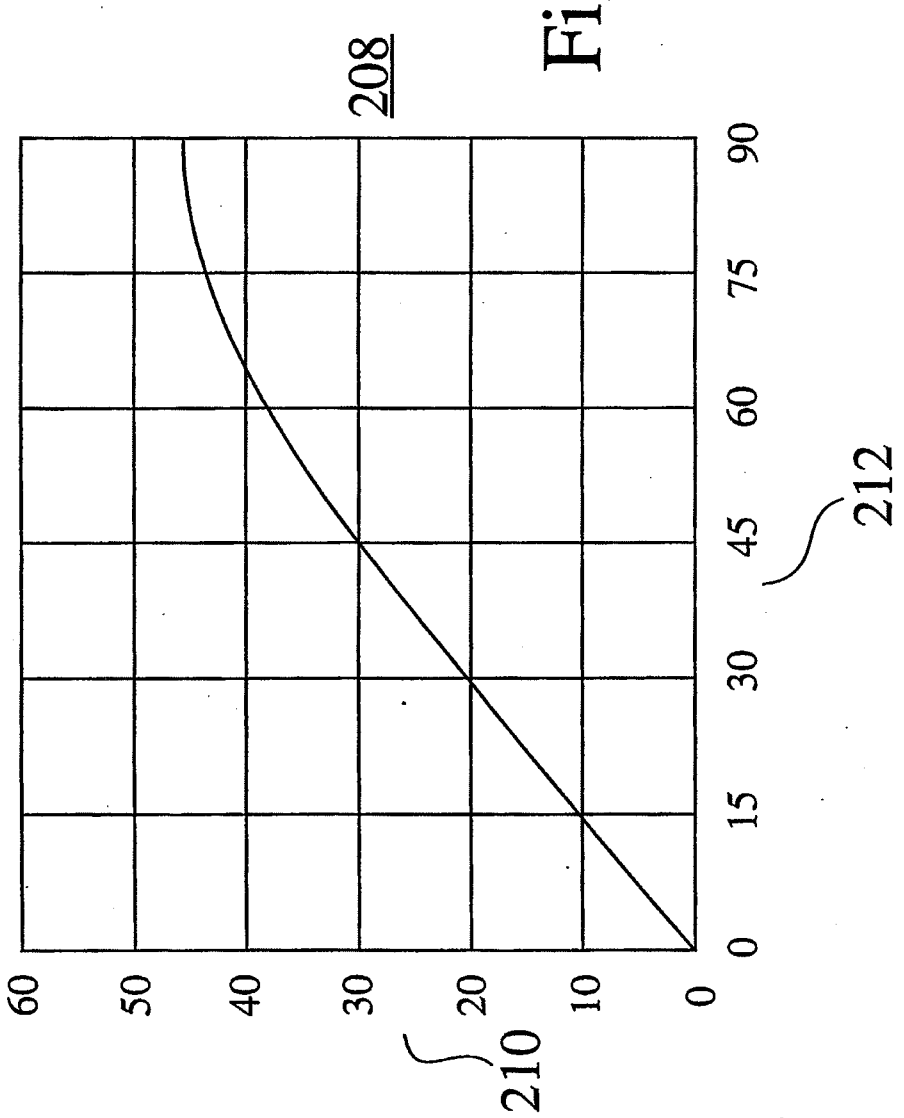

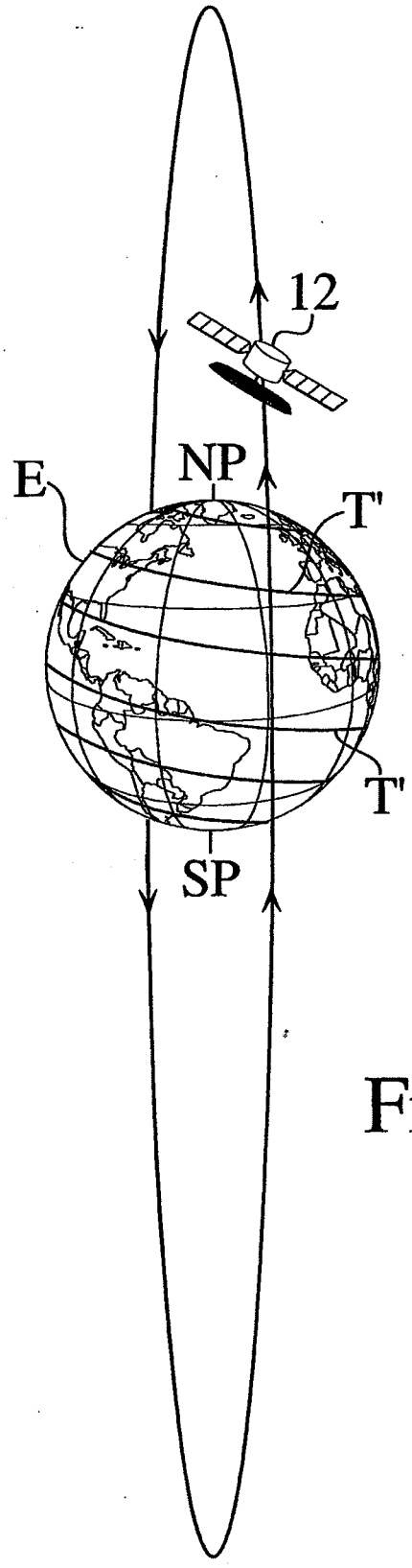

Fig. 10

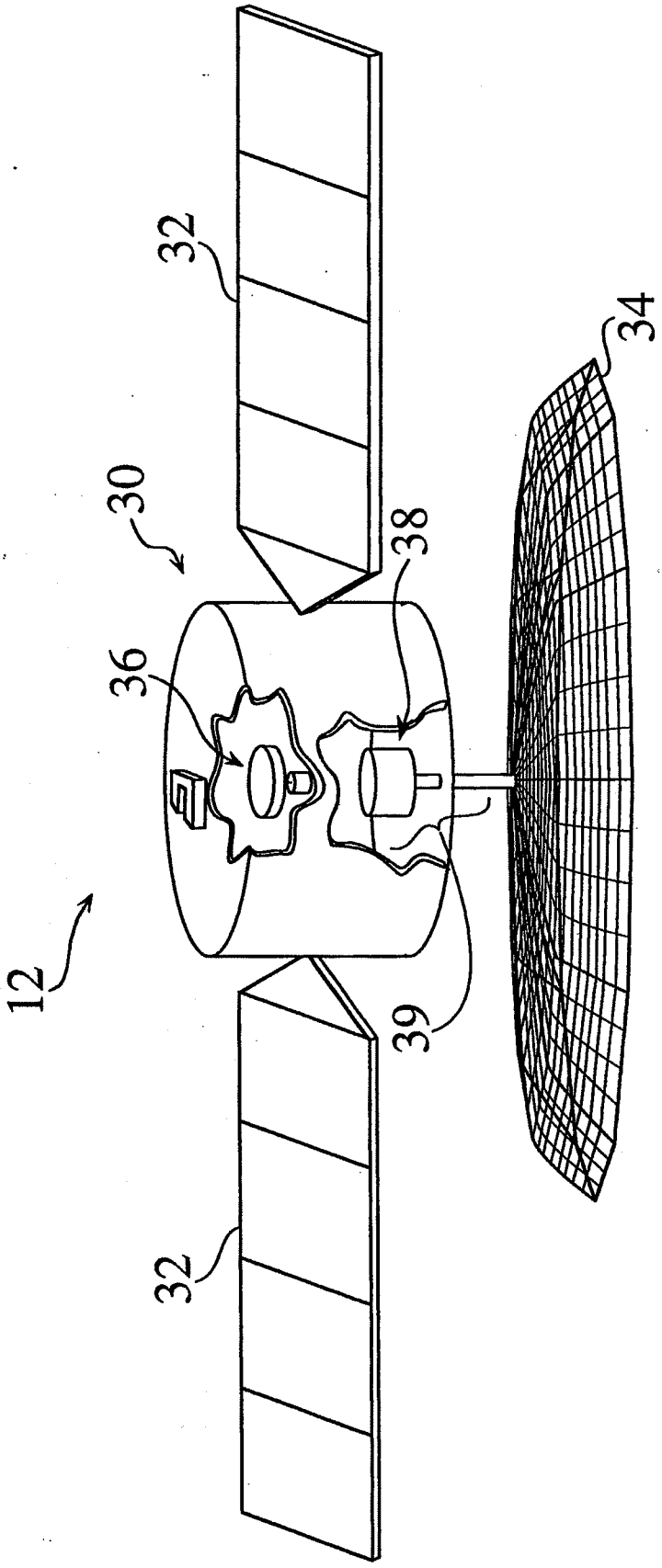

Fig. 11

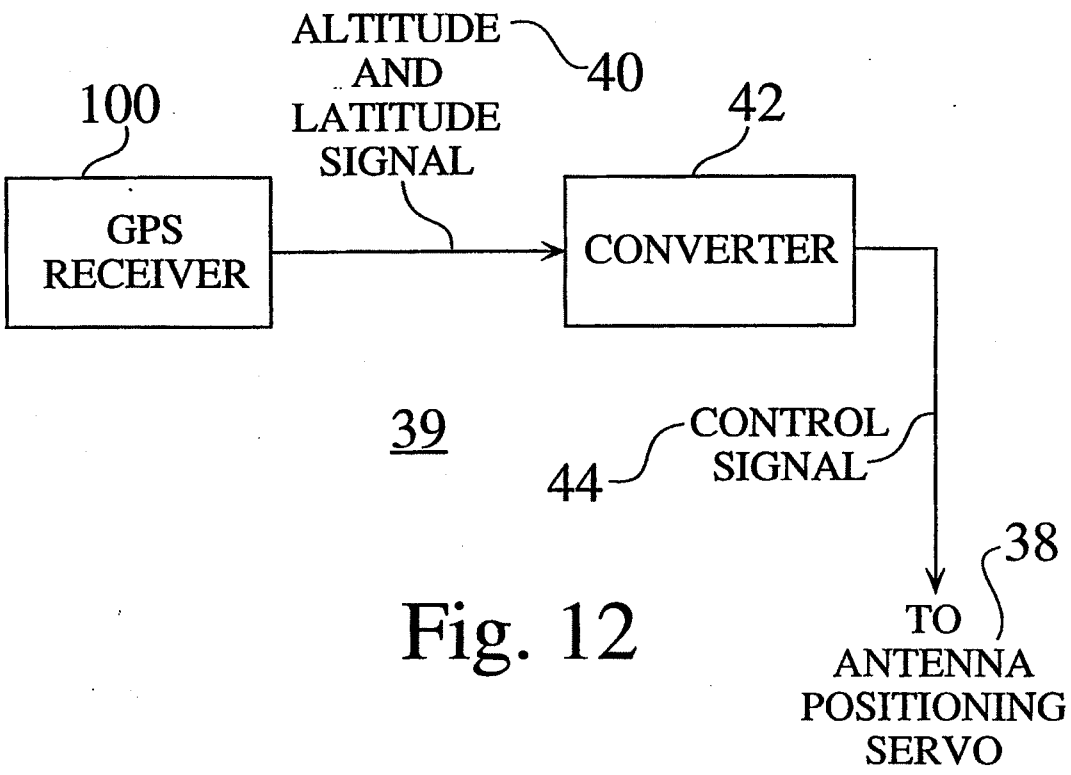
ALTITUDE AND LATITUDE SIGNAL
40
100
42
GPS RECEIVER
CONVERTER
39
44
CONTROL SIGNAL
38
TO ANTENNA POSITIONING SERVO

Fig. 12

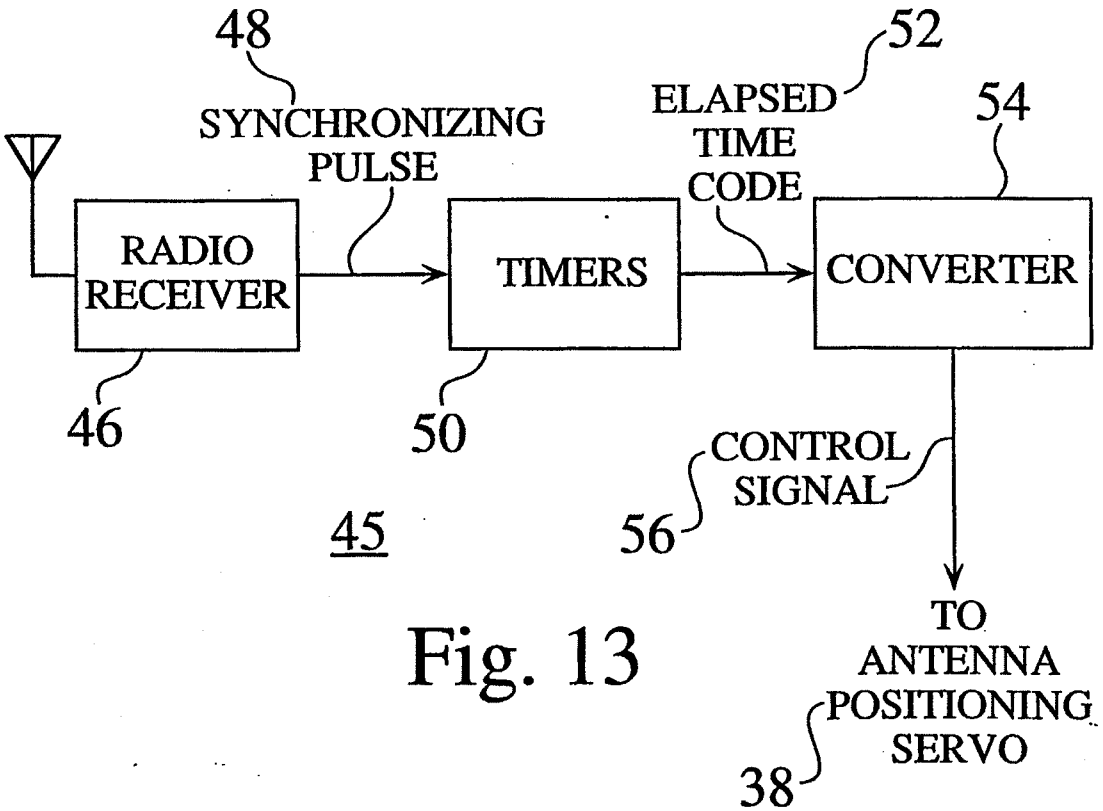
48
SYNCHRONIZING PULSE
52
ELAPSED TIME CODE
54
RADIO RECEIVER
TIMERS
CONVERTER
46
50
45
56
CONTROL SIGNAL
TO ANTENNA POSITIONING SERVO
38

Fig. 13

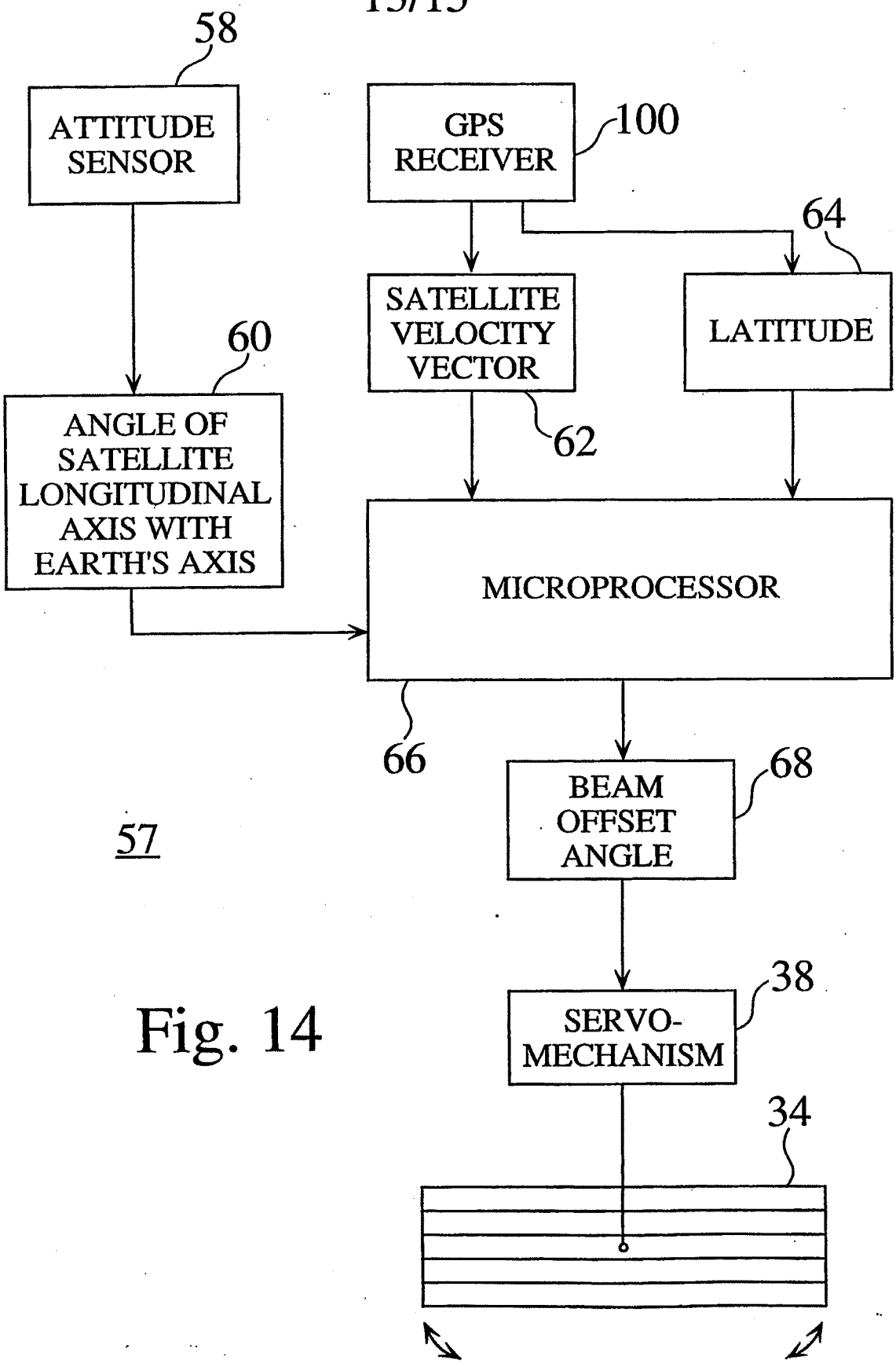
58
ATTITUDE SENSOR
GPS RECEIVER
100
64
SATELLITE VELOCITY VECTOR
LATITUDE
60
ANGLE OF SATELLITE LONGITUDINAL AXIS WITH EARTH'S AXIS
62
MICROPROCESSOR
66
BEAM OFFSET ANGLE
68
57
SERVO-MECHANISM
38
34

Fig. 14

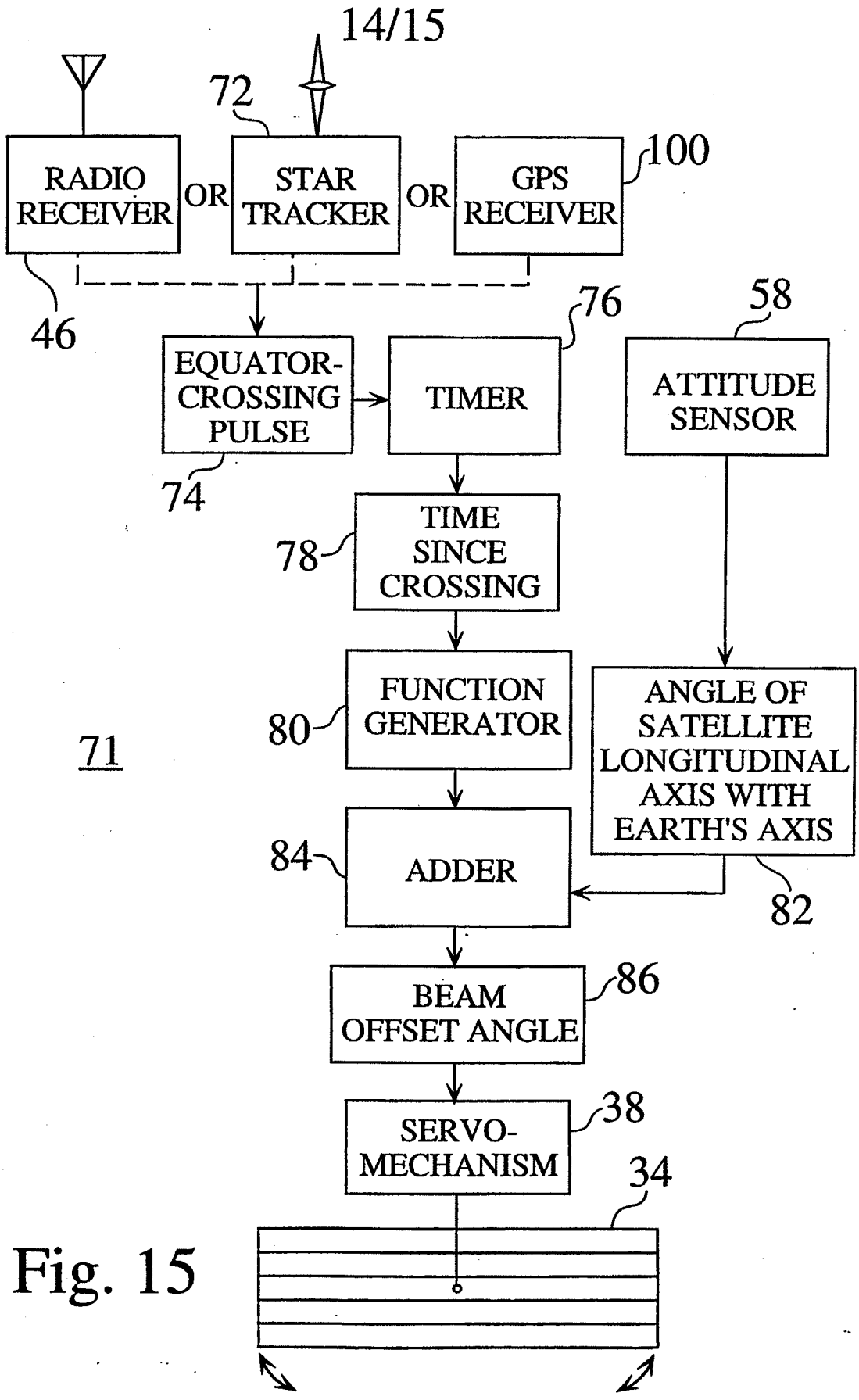
14/15
72
RADIO RECEIVER
OR
STAR TRACKER
OR
GPS RECEIVER
100
46
EQUATOR-CROSSING PULSE
74
TIMER
76
58
ATTITUDE SENSOR
78
TIME SINCE CROSSING
80
FUNCTION GENERATOR
71
ANGLE OF SATELLITE LONGITUDINAL AXIS WITH EARTH'S AXIS
82
84
ADDER
86
BEAM OFFSET ANGLE
38
SERVO-MECHANISM
34

Fig. 15

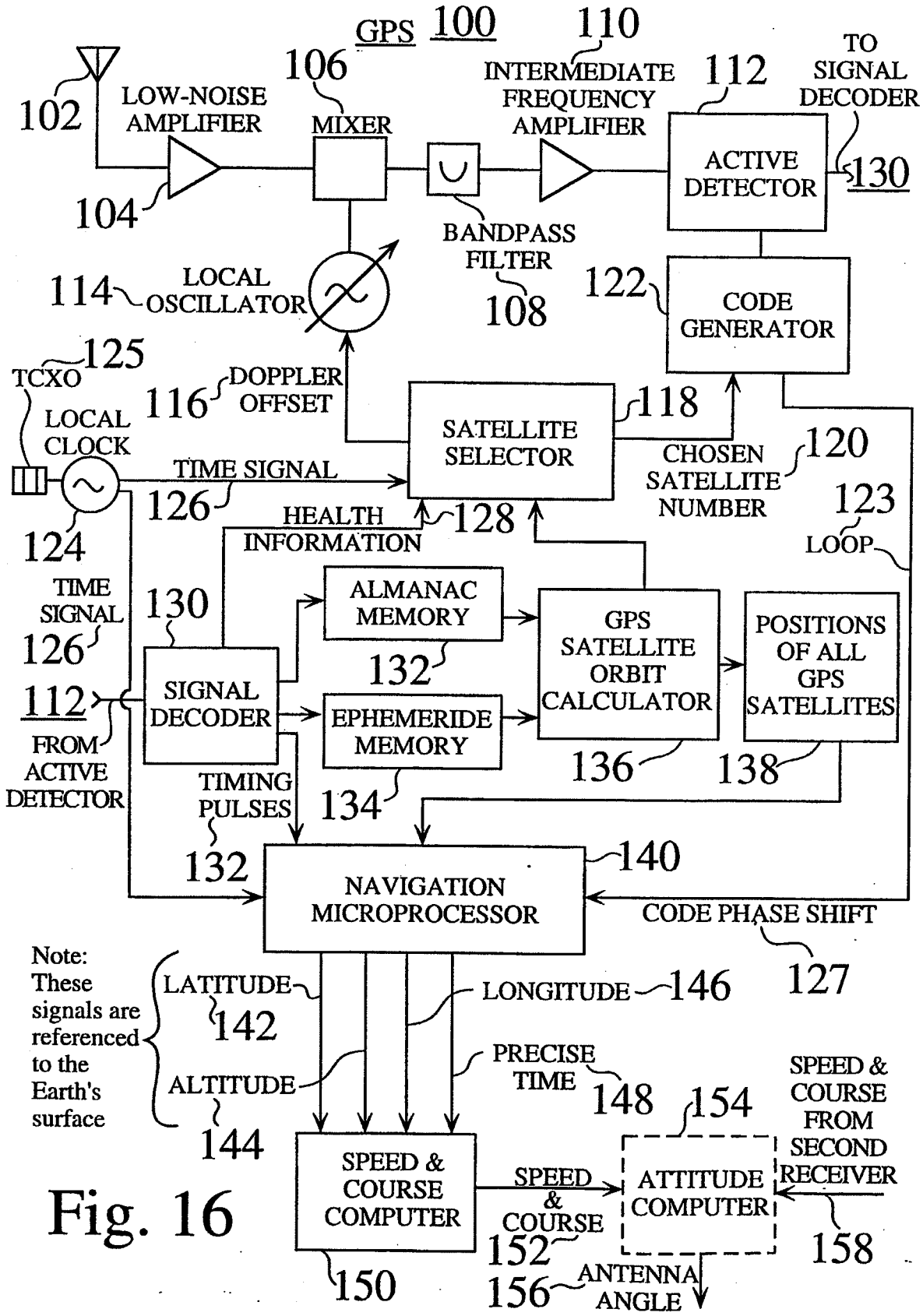
GPS 100
102
LOW-NOISE AMPLIFIER
104
106
MIXER
110
INTERMEDIATE FREQUENCY AMPLIFIER
112
TO SIGNAL DECODER
ACTIVE DETECTOR
130
BANDPASS FILTER
108
114
LOCAL OSCILLATOR
122
CODE GENERATOR
125
TCXO
LOCAL CLOCK
124
116
DOPPLER OFFSET
SATELLITE SELECTOR
118
120
CHOSEN SATELLITE NUMBER
123
LOOP
TIME SIGNAL
126
HEALTH INFORMATION
128
TIME SIGNAL
126
130
SIGNAL DECODER
ALMANAC MEMORY
132
EPHEMERIDE MEMORY
134
GPS SATELLITE ORBIT CALCULATOR
136
POSITIONS OF ALL GPS SATELLITES
138
112
FROM ACTIVE DETECTOR
TIMING PULSES
132
NAVIGATION MICROPROCESSOR
140
CODE PHASE SHIFT
127
Note: These signals are referenced to the Earth's surface
LATITUDE
142
LONGITUDE
146
ALTITUDE
144
PRECISE TIME
148
154
SPEED & COURSE FROM SECOND RECEIVER
158
SPEED & COURSE COMPUTER
150
SPEED & COURSE
152
ATTITUDE COMPUTER
156
ANTENNA ANGLE

Fig. 16

INTERNATIONAL SEARCH REPORT

Interna. .al Application No
PCT/US 97/00204

A. CLASSIFICATION OF SUBJECT MATTER
IPC 6 H04B7/204

According to International Patent Classification (IPC) or to both national classification and IPC

B. FIELDS SEARCHED

Minimum documentation searched (classification system followed by classification symbols)
IPC 6 H04B

Documentation searched other than minimum documentation to the extent that such documents are included in the fields searched

Electronic data base consulted during the international search (name of data base and, where practical, search terms used)

C. DOCUMENTS CONSIDERED TO BE RELEVANT

Category °	Citation of document, with indication, where appropriate, of the relevant passages	Relevant to claim No.
A	FINEAN R J: "MOBILE SATELLITE COMMUNICATIONS PROPOSALS" BT TECHNOLOGY JOURNAL, vol. 14, no. 3, July 1996, pages 74-80, XP000598157 see page 75, left-hand column, line 36 - page 79, left-hand column, line 10; figures 1,2,4 ---	1,2,7,13
A	US 5 548 294 A (STURZA) 20 August 1996 see column 5, line 50 - column 6, line 65; figures 1,2 ---	1,2,7,13
A	EP 0 549 220 A (MOTOROLA) 30 June 1993 see claims 1-10; figures 1-5 ---	1,2,7,13

-/--

[X] Further documents are listed in the continuation of box C.

[X] Patent family members are listed in annex.

° Special categories of cited documents :

"A" document defining the general state of the art which is not considered to be of particular relevance

"E" earlier document but published on or after the international filing date

"L" document which may throw doubts on priority claim(s) or which is cited to establish the publication date of another citation or other special reason (as specified)

"O" document referring to an oral disclosure, use, exhibition or other means

"P" document published prior to the international filing date but later than the priority date claimed

"T" later document published after the international filing date or priority date and not in conflict with the application but cited to understand the principle or theory underlying the invention

"X" document of particular relevance; the claimed invention cannot be considered novel or cannot be considered to involve an inventive step when the document is taken alone

"Y" document of particular relevance; the claimed invention cannot be considered to involve an inventive step when the document is combined with one or more other such documents, such combination being obvious to a person skilled in the art.

"&" document member of the same patent family

2

Date of the actual completion of the international search	Date of mailing of the international search report
6 October 1997	16. 10. 97
Name and mailing address of the ISA European Patent Office, P.B. 5818 Patentlaan 2 NL - 2280 HV Rijswijk Tel. (+31-70) 340-2040, Tx. 31 651 epo nl, Fax: (+31-70) 340-3016	Authorized officer Bischof, J-L

Form PCT/ISA/210 (second sheet) (July 1992)

INTERNATIONAL SEARCH REPORT

Interna. .al Application No
PCT/US 97/00204

C.(Continuation) DOCUMENTS CONSIDERED TO BE RELEVANT

Category °	Citation of document, with indication, where appropriate, of the relevant passages	Relevant to claim No.
A	EP 0 516 039 A (ALCATEL ESPACE) 2 December 1992 see claims 1-10; figures 1-8	1,2,7,13

Form PCT/ISA/210 (continuation of second sheet) (July 1992)

INTERNATIONAL SEARCH REPORT

Information on patent family members

Interna[illegible]al Application No
PCT/US 97/00204

Patent document cited in search report	Publication date	Patent family member(s)	Publication date
US 5548294 A	20-08-96	NONE	
EP 549220 A	30-06-93	US 5227802 A	13-07-93
		CA 2086081 A	24-06-93
		JP 5284072 A	29-10-93
EP 516039 A	02-12-92	FR 2677197 A	04-12-92
		AU 645905 B	27-01-94
		AU 1713792 A	03-12-92
		CA 2070082 A	01-12-92
		JP 5167487 A	02-07-93
		NZ 242764 A	25-11-94

WHAT IS CLAIMED IS:

1. A method for hub-spoke, bent-pipe satellite communication utilizing a satellite containing a plurality of pathways, comprising:

specifying a weight set and a beam hop frame definition for a beam hopping frame, the beam hopping frame comprising a plurality of timeslots, the specified weight set comprising a plurality of receive weight vectors and a plurality of transmit weight vectors for generating uplink beam signals and downlink beam signals in timeslots of the beam hopping frame, the specified beam hop frame definition defining a plurality of sequential dwell times and a plurality of pathway gains, each timeslot associated with a dwell time; and

operating the satellite to generate the uplink beam signals and downlink beam signals for pathways in accordance with the specified weight set and the specified beam hop frame definition,

wherein the specified weight set and the specified beam hop frame definition support an allocation of capacity between forward traffic, from at least one gateway to a plurality of terminals, and return traffic, from a plurality of terminals to at least one gateway.

2. The method of claim 1, wherein the specified weight set and the specified beam hop frame definition are a first weight set and a first beam hop frame definition supporting a first allocation of capacity between forward traffic and return traffic, and the method further comprises:

specifying a second weight set and a second beam hop frame definition for a beam hopping frame; and

switching from operation of the satellite in accordance with the first weight set and the first beam hop frame definition to operation of the satellite to generate the uplink beam signals and downlink beam signals for pathways in accordance with the specified second weight set and the specified second beam hop frame definition,

wherein the specified second weight set and the specified second beam hop frame definition support a second allocation of capacity between forward traffic and return traffic.

3. The method of claim 1, wherein specifying the weight set and the beam hop frame definition for the beam hopping frame comprises configuring a first fraction of the plurality of pathways as dedicated forward pathways for all timeslots in the beam hopping frame and configuring a second fraction of the plurality of pathways as dedicated return pathways for all timeslots in the beam hopping frame.

4. The method of claim 1, wherein specifying the weight set and the beam hop frame definition for the beam hopping frame comprises, for at least one pathway of the plurality of pathways, configuring the pathway as a forward pathway for a first fraction of time in the beam hopping frame and configuring the pathway as a return pathway for a second fraction of time in the beam hopping frame.

5. The method of claim 1, wherein specifying the weight set and the beam hop frame definition for the beam hopping frame comprises:

configuring at least one pathway of the plurality of pathways as a forward pathway for at least one timeslot in the beam hopping frame; and

configuring at least one pathway of the plurality of pathways as a return pathway for at least one timeslot in the beam hopping frame,

wherein

configuring a pathway as a forward pathway comprises configuring the pathway for reception of a multiplexed signal from a gateway destined for a plurality of terminals, the plurality of terminals located in a respective forward link coverage area;

configuring a pathway as a return pathway comprises configuring the pathway for reception of a composite signal derived from a plurality of terminals and destined for a gateway, the plurality of terminals located in a respective return link coverage area;

a union of the forward link coverage areas of all the forward pathways during the beam hopping frame defines a total forward link coverage area;

a union of the return link coverage areas of all the return pathways during the beam hopping frame defines a total return link coverage area; and

the total forward link coverage area differs from the total return link coverage area.

6. The method of claim 1, wherein specifying the weight set and the beam hop frame definition for the beam hopping frame comprises configuring the pathways of the plurality of pathways such that each gateway transmits forward traffic on at least one forward pathway to a plurality of terminals and receives return traffic on at least one return pathway from the same plurality of terminals, implementing a one-to-one mapping between gateways and the pluralities of terminals the gateways service.

7. The method of claim 1, wherein specifying the weight set and the beam hop frame definition for the beam hopping frame comprises configuring the pathways of the plurality of pathways such that each gateway of a plurality of gateways operates half-duplex by transmitting forward traffic on at least one forward pathway to a respective plurality of terminals, and all pluralities of terminals transmit return traffic on return pathways to a same shared receive gateway.

8. A method for hub-spoke, bent-pipe satellite communication utilizing a satellite containing a plurality of pathways, the method performed at the satellite and comprising:

obtaining a specified weight set and a specified beam hop frame definition for a beam hopping frame, the beam hopping frame comprising a plurality of timeslots, the specified weight set comprising a plurality of receive weight vectors and a plurality of transmit weight vectors for generating uplink beam signals and downlink beam signals in timeslots of the beam hopping frame, the specified beam hop frame definition defining a plurality of sequential dwell times and a plurality of pathway gains, each timeslot associated with a dwell time;

generating a plurality of receive weights and a plurality of transmit weights in accordance with the specified weight set;

setting the plurality of pathway gains in accordance with the specified beam hop frame definition; and

generating the uplink beam signals and downlink beam signals for pathways using the plurality of receive weights, the plurality of pathway gains, and the plurality of transmit weights in accordance with the plurality of sequential dwell times defined by the specified beam hop frame definition,

wherein the specified weight set and the specified beam hop frame definition support an allocation of capacity between forward traffic, from at least one gateway to a plurality of terminals, and return traffic, from a plurality of terminals to at least one gateway.

9. The method of claim 8, wherein the specified weight set and the specified beam hop frame definition are a first weight set and a first beam hop frame definition supporting a first allocation of capacity between forward traffic and return traffic, the first weight set comprising a first plurality of receive weight vectors and a first plurality of transmit weight vectors, the specified first beam hop frame definition defining a first

plurality of sequential dwell times and a first plurality of pathway gains, and the method further comprises:

obtaining a specified second weight set and a specified second beam hop frame definition for a beam hopping frame, the specified second weight set comprising a second plurality of receive weight vectors and a second plurality of transmit weight vectors for generating uplink beam signals and downlink beam signals in timeslots of the beam hopping frame, the specified second beam hop frame definition defining a second plurality of sequential dwell times and a second plurality of pathway gains;

generating a second plurality of receive weights and a second plurality of transmit weights in accordance with the specified second weight set;

setting the second plurality of pathway gains in accordance with the specified second beam hop frame definition; and

switching generation of the uplink beam signals and downlink beam signals for pathways using the first plurality of receive weights, the first plurality of pathway gains, and the first plurality of transmit weights in accordance with the first plurality of sequential dwell times to generation of the uplink beam signals and downlink beam signals for pathways using the second plurality of receive weights, the second plurality of pathway gains, and the second plurality of transmit weights in accordance with the second plurality of sequential dwell times defined by the specified second beam hop frame definition,

wherein the specified second weight set and the specified second beam hop frame definition support a second allocation of capacity between forward traffic and return traffic.

10. The method of claim 8, wherein the specified weight set and the specified beam hop frame definition specifies configuration of a first fraction of the plurality of pathways as dedicated forward pathways for all timeslots in the beam hopping frame and configuration of a second fraction of the plurality of pathways as dedicated return pathways for all timeslots in the beam hopping frame.

11. The method of claim 8, wherein the specified weight set and the specified beam hop frame definition specifies, for at least one pathway of the plurality of pathways, configuration of the pathway as a forward pathway for a first fraction of time in the beam hopping frame and configuration of the pathway as a return pathway for a second fraction of time in the beam hopping frame.

12. The method of claim 8, wherein the specified weight set and the specified beam hop frame definition specifies configuration of at least one pathway of the plurality of pathways as a forward pathway for at least one timeslot in the beam hopping frame, and configuration of at least one pathway of the plurality of pathways as a return pathway for at least one timeslot in the beam hopping frame,

wherein

configuring a pathway as a forward pathway comprises configuring the pathway for reception of a multiplexed signal from a gateway destined for a plurality of terminals, the plurality of terminals located in a respective forward link coverage area;

configuring a pathway as a return pathway comprises configuring the pathway for reception of a composite signal derived from a plurality of terminals and destined for a gateway, the plurality of terminals located in a respective return link coverage area;

a union of the forward link coverage areas of all the forward pathways during the beam hopping frame defines a total forward link coverage area;

a union of the return link coverage areas of all the return pathways during the beam hopping frame defines a total return link coverage area; and

the total forward link coverage area differs from the total return link coverage area.

13. The method of claim 8, wherein the specified weight set and the specified beam hop frame definition specifies configuration of the pathways of the plurality of pathways such that each gateway transmits forward traffic on at least one forward pathway to a plurality of terminals and receives return traffic on at least one return pathway from the same plurality of terminals, implementing a one-to-one mapping between gateways and the pluralities of terminals the gateways service.

14. The method of claim 8, wherein the specified weight set and the specified beam hop frame definition specifies configuration of the pathways of the plurality of pathways such that each gateway of a plurality of gateways operates half-duplex by transmitting forward traffic on at least one forward pathway to a respective plurality of terminals, and all pluralities of terminals transmit return traffic on return pathways to a same shared receive gateway.

15. A hub-spoke, bent-pipe satellite communications system comprising:

a plurality of terminals;

a plurality of gateways configured to communicate with the plurality of terminals;

a controller configured to:

specify a weight set and a beam hop frame definition for a beam hopping frame, the beam hopping frame comprising a plurality of timeslots, the specified weight set comprising a plurality of receive weight vectors and a plurality of transmit weight vectors for generating uplink beam signals and downlink beam signals in timeslots of the beam hopping frame, the specified beam hop frame definition defining a plurality of sequential dwell times and a plurality of pathway gains, each timeslot associated with a dwell time; and

a satellite containing a plurality of pathways, the satellite configured to:

obtain the specified weight set and the specified beam hop frame definition for a beam hopping frame;

generate a plurality of receive weights and a plurality of transmit weights in accordance with the specified weight set;

set the plurality of pathway gains in accordance with the specified beam hop frame definition; and

generate the uplink beam signals and downlink beam signals for pathways using the plurality of receive weights, the plurality of pathway gains, and the plurality of transmit weights in accordance with the plurality of sequential dwell times defined by the specified beam hop frame definition,

wherein the specified weight set and the specified beam hop frame definition support an allocation of capacity between forward traffic, from at least one gateway to a plurality of terminals, and return traffic, from a plurality of terminals to at least one gateway.

16. The system of claim 15, wherein

the specified weight set and the specified beam hop frame definition are a first weight set and a first beam hop frame definition supporting a first allocation of capacity between forward traffic and return traffic, the first weight set comprising a first plurality of receive weight vectors and a first plurality of transmit weight vectors, the specified first beam hop frame definition defining a first plurality of sequential dwell times and a first plurality of pathway gains;

the controller is further configured to:

specify a second weight set and a second beam hop frame definition for a beam hopping frame, the specified second weight set comprising a second plurality of receive weight vectors and a second plurality of transmit weight vectors for generating uplink beam signals and downlink beam signals in timeslots of the beam hopping frame, the specified second beam hop frame definition defining a second plurality of sequential dwell times and a second plurality of pathway gains;

the satellite is further configured to:

obtain the specified second weight set and the specified second beam hop frame definition for a beam hopping frame;

generate a second plurality of receive weights and a second plurality of transmit weights in accordance with the specified second weight set;

set the second plurality of pathway gains in accordance with the specified second beam hop frame definition; and

switch generation of the uplink beam signals and downlink beam signals for pathways using the first plurality of receive weights, the first plurality of pathway gains, and the first plurality of transmit weights in accordance with the first plurality of sequential dwell times to generation of the uplink beam signals and downlink beam signals for pathways using the second plurality of receive weights, the second plurality of pathway gains, and the second plurality of transmit weights in accordance with the second plurality of sequential dwell times defined by the specified second beam hop frame definition; and

the specified second weight set and the specified second beam hop frame definition support a second allocation of capacity between forward traffic and return traffic.

17. The system of claim 15, wherein specifying the weight set and the beam hop frame definition for the beam hopping frame comprises configuring a first fraction of the plurality of pathways as dedicated forward pathways for all timeslots in the beam hopping frame and configuring a second fraction of the plurality of pathways as dedicated return pathways for all timeslots in the beam hopping frame.

18. The system of claim 15, wherein specifying the weight set and the beam hop frame definition for the beam hopping frame comprises, for at least one pathway of the plurality of pathways, configuring the pathway as a forward pathway for a first fraction of time in the beam hopping frame and configuring the pathway as a return pathway for a second fraction of time in the beam hopping frame.

19. The system of claim 15, wherein specifying the weight set and the beam hop frame definition for the beam hopping frame comprises:

configuring at least one pathway of the plurality of pathways as a forward pathway for at least one timeslot in the beam hopping frame; and

configuring at least one pathway of the plurality of pathways as a return pathway for at least one timeslot in the beam hopping frame,

wherein

configuring a pathway as a forward pathway comprises configuring the pathway for reception of a multiplexed signal from a gateway destined for a plurality of terminals, the plurality of terminals located in a respective forward link coverage area;

configuring a pathway as a return pathway comprises configuring the pathway for reception of a composite signal derived from a plurality of terminals and destined for a gateway, the plurality of terminals located in a respective return link coverage area;

a union of the forward link coverage areas of all the forward pathways during the beam hopping frame defines a total forward link coverage area;

a union of the return link coverage areas of all the return pathways during the beam hopping frame defines a total return link coverage area; and

the total forward link coverage area differs from the total return link coverage area.

20. The system of claim 15, wherein specifying the weight set and the beam hop frame definition for the beam hopping frame comprises configuring the pathways of the plurality of pathways such that each gateway transmits forward traffic on at least one forward pathway to a plurality of terminals and receives return traffic on at least one return pathway from the same plurality of terminals, implementing a one-to-one mapping between gateways and the pluralities of terminals the gateways service.

21. The system of claim 15, wherein specifying the weight set and the beam hop frame definition for the beam hopping frame comprises configuring the pathways of the plurality of pathways such that each gateway of a plurality of gateways operates half-duplex by transmitting forward traffic on at least one forward pathway to a respective plurality of terminals, and all pluralities of terminals transmit return traffic on return pathways to a same shared receive gateway.

22. The system of claim 15, wherein the controller is a ground terminal of the hub-spoke, bent-pipe satellite communications system.

23. A satellite for hub-spoke, bent-pipe satellite communication, the satellite containing a plurality of pathways and comprising:

one or more processors configured to:

obtain a specified weight set and a specified beam hop frame definition for a beam hopping frame, the beam hopping frame comprising a plurality of timeslots, the specified weight set comprising a plurality of receive weight vectors and a plurality of transmit weight vectors for generating uplink beam signals and downlink beam signals in timeslots of the beam hopping frame, the specified beam hop frame definition defining a plurality of sequential dwell times and a plurality of pathway gains, each timeslot associated with a dwell time;

generate a plurality of receive weights and a plurality of transmit weights in accordance with the specified weight set; and

set the plurality of pathway gains in accordance with the specified beam hop frame definition; and

one or more beam forming networks configured to:

generate the uplink beam signals and downlink beam signals for pathways using the plurality of receive weights, the plurality of pathway gains, and the plurality of transmit weights in accordance with the plurality of sequential dwell times defined by the specified beam hop frame definition,

wherein the specified weight set and the specified beam hop frame definition support an allocation of capacity between forward traffic, from at least one gateway to a plurality of terminals, and return traffic, from a plurality of terminals to at least one gateway.

24. The satellite of claim 23, wherein

the specified weight set and the specified beam hop frame definition are a first weight set and a first beam hop frame definition supporting a first allocation of capacity between forward traffic and return traffic, the first weight set comprising a first plurality of receive weight vectors and a first plurality of transmit weight vectors, the specified first beam hop frame definition defining a first plurality of sequential dwell times and a first plurality of pathway gains;

the one or more processors are further configured to:

obtain a specified second weight set and a specified second beam hop frame definition for a beam hopping frame, the specified second weight set comprising a second plurality of receive weight vectors and a second plurality of transmit weight vectors for generating uplink beam signals and downlink beam signals in timeslots of the beam hopping frame, the specified second beam hop frame definition defining a second plurality of sequential dwell times and a second plurality of pathway gains;

generate a second plurality of receive weights and a second plurality of transmit weights in accordance with the specified second weight set; and

set the second plurality of pathway gains in accordance with the specified second beam hop frame definition; and

the one or more beam forming networks are further configured to:

switch generation of the uplink beam signals and downlink beam signals for pathways using the first plurality of receive weights, the first plurality of pathway gains, and the first plurality of transmit weights in accordance with the first plurality of sequential dwell times to generation of the uplink beam signals and downlink beam signals for pathways using the second plurality of receive weights, the second plurality of pathway gains, and the second plurality of transmit weights in accordance with the second plurality of sequential dwell times defined by the specified second beam hop frame definition,

wherein the specified second weight set and the specified second beam hop frame definition support a second allocation of capacity between forward traffic and return traffic.

25. The satellite of claim 23, wherein the specified weight set and the specified beam hop frame definition specifies configuration of a first fraction of the plurality of pathways as dedicated forward pathways for all timeslots in the beam hopping frame and configuration of a second fraction of the plurality of pathways as dedicated return pathways for all timeslots in the beam hopping frame.

26. The satellite of claim 23, wherein the specified weight set and the specified beam hop frame definition specifies, for at least one pathway of the plurality of pathways, configuration of the pathway as a forward pathway for a first fraction of time in the beam hopping frame and configuration of the pathway as a return pathway for a second fraction of time in the beam hopping frame.

27. The satellite of claim 23, wherein the specified weight set and the specified beam hop frame definition specifies configuration of at least one pathway of the

plurality of pathways as a forward pathway for at least one timeslot in the beam hopping frame, and configuration of at least one pathway of the plurality of pathways as a return pathway for at least one timeslot in the beam hopping frame,

wherein

configuring a pathway as a forward pathway comprises configuring the pathway for reception of a multiplexed signal from a gateway destined for a plurality of terminals, the plurality of terminals located in a respective forward link coverage area;

configuring a pathway as a return pathway comprises configuring the pathway for reception of a composite signal derived from a plurality of terminals and destined for a gateway, the plurality of terminals located in a respective return link coverage area;

a union of the forward link coverage areas of all the forward pathways during the beam hopping frame defines a total forward link coverage area;

a union of the return link coverage areas of all the return pathways during the beam hopping frame defines a total return link coverage area; and

the total forward link coverage area differs from the total return link coverage area.

28. The satellite of claim 23, wherein the specified weight set and the specified beam hop frame definition specifies configuration of the pathways of the plurality of pathways such that each gateway transmits forward traffic on at least one forward pathway to a plurality of terminals and receives return traffic on at least one return pathway from the same plurality of terminals, implementing a one-to-one mapping between gateways and the pluralities of terminals the gateways service.

29. The satellite of claim 23, wherein the specified weight set and the specified beam hop frame definition specifies configuration of the pathways of the plurality of pathways such that each gateway of a plurality of gateways operates half-duplex by transmitting forward traffic on at least one forward pathway to a respective plurality of terminals, and all pluralities of terminals transmit return traffic on return pathways to a same shared receive gateway.

30. A method for hub-spoke, bent-pipe satellite communication utilizing a satellite containing a plurality of pathways, comprising:

specifying a first weight set and a first beam hop frame definition for a beam hopping frame, the beam hopping frame comprising a plurality of timeslots, the specified first

weight set comprising a first plurality of receive weight vectors and a first plurality of transmit weight vectors for generating uplink beam signals and downlink beam signals in timeslots of the beam hopping frame, the specified first beam hop frame definition defining a first plurality of sequential dwell times and a first plurality of pathway gains, each timeslot associated with a dwell time;

operating the satellite to generate the uplink beam signals and downlink beam signals for pathways in accordance with the specified first weight set and the specified first beam hop frame definition;

specifying a second weight set and a second beam hop frame definition for a beam hopping frame, the specified second weight set comprising a second plurality of receive weight vectors and a second plurality of transmit weight vectors for generating uplink beam signals and downlink beam signals in timeslots of the beam hopping frame, the specified second beam hop frame definition defining a second plurality of sequential dwell times and a second plurality of pathway gains; and

switching from operation of the satellite in accordance with the specified first weight set and the specified first beam hop frame definition to operation of the satellite to generate the uplink beam signals and downlink beam signals for pathways in accordance with the specified second weight set and the specified second beam hop frame definition,

wherein the specified first weight set and the specified first beam hop frame definition support first targets of coverage area and capacity allocation based on a first time-based traffic estimate, and the specified second weight set and the specified second beam hop frame definition support second targets of coverage area and capacity allocation based on a second time-based traffic estimate.

31. The method of claim 30, further comprising:

pre-computing and uploading to the satellite for storage a plurality of weight sets, including the first weight set and the second weight set, and a plurality of beam hop frame definitions, including the first beam hop frame definition and the second beam hop frame definition,

wherein switching comprises switching by the satellite in response to receiving a command transmitted from a ground entity.

32. A method for hub-spoke, bent-pipe satellite communication utilizing a satellite containing a plurality of pathways, the method performed at the satellite and comprising:

obtaining a first weight set and a first beam hop frame definition for a beam hopping frame, the beam hopping frame comprising a plurality of timeslots, the specified first weight set comprising a first plurality of receive weight vectors and a first plurality of transmit weight vectors for generating uplink beam signals and downlink beam signals in timeslots of the beam hopping frame, the specified first beam hop frame definition defining a first plurality of sequential dwell times and a first plurality of pathway gains, each timeslot associated with a dwell time;

generating a plurality of receive weights and a plurality of transmit weights in accordance with the specified weight set;

setting the plurality of pathway gains in accordance with the specified beam hop frame definition;

generating the uplink beam signals and downlink beam signals for pathways using the plurality of receive weights, the plurality of pathway gains, and the plurality of transmit weights in accordance with the plurality of sequential dwell times defined by the specified beam hop frame definition;

obtaining a second weight set and a second beam hop frame definition for a beam hopping frame, the specified second weight set comprising a second plurality of receive weight vectors and a second plurality of transmit weight vectors for generating uplink beam signals and downlink beam signals in timeslots of the beam hopping frame, the specified second beam hop frame definition defining a second plurality of sequential dwell times and a second plurality of pathway gains;

generating a second plurality of receive weights and a second plurality of transmit weights in accordance with the specified second weight set;

setting the second plurality of pathway gains in accordance with the specified second beam hop frame definition; and

switching generation of the uplink beam signals and downlink beam signals for pathways using the first plurality of receive weights, the first plurality of pathway gains, and the first plurality of transmit weights in accordance with the first plurality of sequential dwell times to generation of the uplink beam signals and downlink beam signals for pathways using the second plurality of receive weights, the second plurality of pathway gains, and the second plurality of transmit weights in accordance with the second plurality of sequential dwell times defined by the specified second beam hop frame definition,

wherein the specified first weight set and the specified first beam hop frame definition support first targets of coverage area and capacity allocation based on a first time-based traffic estimate, and the specified second weight set and the specified second beam hop

frame definition support second targets of coverage area and capacity allocation based on a second time-based traffic estimate.

33. The method of claim 32, further comprising:

receiving and storing a plurality of weight sets, including the first weight set and the second weight set, and a plurality of beam hop frame definitions, including the first beam hop frame definition and the second beam hop frame definition, the plurality of weight sets and the plurality of beam hop frame definitions pre-computed and uploaded to the satellite; and

receiving a command transmitted from a ground entity,

wherein switching is in response to receiving the command.

34. A hub-spoke, bent-pipe satellite communications system comprising:

a plurality of terminals;

a plurality of gateways configured to communicate with the plurality of terminals;

a controller configured to:

specify a first weight set and a first beam hop frame definition for a beam hopping frame, the beam hopping frame comprising a plurality of timeslots, the specified first weight set comprising a first plurality of receive weight vectors and a first plurality of transmit weight vectors for generating uplink beam signals and downlink beam signals in timeslots of the beam hopping frame, the specified first beam hop frame definition defining a first plurality of sequential dwell times and a first plurality of pathway gains, each timeslot associated with a dwell time; and

specify a second weight set and a second beam hop frame definition for a beam hopping frame, the specified second weight set comprising a second plurality of receive weight vectors and a second plurality of transmit weight vectors for generating uplink beam signals and downlink beam signals in timeslots of the beam hopping frame, the specified second beam hop frame definition defining a second plurality of sequential dwell times and a second plurality of pathway gains; and

a satellite containing a plurality of pathways, the satellite configured to:

obtain the specified first weight set and the specified first beam hop frame definition for a beam hopping frame;

generate a first plurality of receive weights and a first plurality of transmit weights in accordance with the specified first weight set;

set the first plurality of pathway gains in accordance with the specified first beam hop frame definition;

generate the uplink beam signals and downlink beam signals for pathways using the first plurality of receive weights, the first plurality of pathway gains, and the first plurality of transmit weights in accordance with the first plurality of sequential dwell times defined by the specified first beam hop frame definition;

obtain the specified second weight set and the specified second beam hop frame definition for a beam hopping frame;

generate a second plurality of receive weights and a second plurality of transmit weights in accordance with the specified second weight set;

set the second plurality of pathway gains in accordance with the specified second beam hop frame definition; and

switch generation of the uplink beam signals and downlink beam signals for pathways using the first plurality of receive weights, the first plurality of pathway gains, and the first plurality of transmit weights in accordance with the first plurality of sequential dwell times to generation of the uplink beam signals and downlink beam signals for pathways using the second plurality of receive weights, the second plurality of pathway gains, and the second plurality of transmit weights in accordance with the second plurality of sequential dwell times defined by the specified second beam hop frame definition,

wherein the specified first weight set and the specified first beam hop frame definition support first targets of coverage area and capacity allocation based on a first time-based traffic estimate, and the specified second weight set and the specified second beam hop frame definition support second targets of coverage area and capacity allocation based on a second time-based traffic estimate.

35. The system of claim 34, wherein

the controller is further configured to pre-compute and upload to the satellite for storage a plurality of weight sets, including the first weight set and the second weight set, and a plurality of beam hop frame definitions, including the first beam hop frame definition and the second beam hop frame definition; and

the satellite is configured to switch in response to receiving a command transmitted from a ground entity.

36. A satellite for hub-spoke, bent-pipe satellite communication, the satellite containing a plurality of pathways and comprising:

one or more processors configured to:

obtain a first weight set and a first beam hop frame definition for a beam hopping frame, the beam hopping frame comprising a plurality of timeslots, the specified first weight set comprising a first plurality of receive weight vectors and a first plurality of transmit weight vectors for generating uplink beam signals and downlink beam signals in timeslots of the beam hopping frame, the specified first beam hop frame definition defining a first plurality of sequential dwell times and a first plurality of pathway gains, each timeslot associated with a dwell time;

generate a plurality of receive weights and a plurality of transmit weights in accordance with the specified weight set;

set the plurality of pathway gains in accordance with the specified beam hop frame definition;

obtain a second weight set and a second beam hop frame definition for a beam hopping frame, the specified second weight set comprising a second plurality of receive weight vectors and a second plurality of transmit weight vectors for generating uplink beam signals and downlink beam signals in timeslots of the beam hopping frame, the specified second beam hop frame definition defining a second plurality of sequential dwell times and a second plurality of pathway gains;

generate a second plurality of receive weights and a second plurality of transmit weights in accordance with the specified second weight set; and

set the second plurality of pathway gains in accordance with the specified second beam hop frame definition; and

one or more beam forming networks configured to:

generate the uplink beam signals and downlink beam signals for pathways using the plurality of receive weights, the plurality of pathway gains, and the plurality of transmit weights in accordance with the plurality of sequential dwell times defined by the specified beam hop frame definition; and

switch generation of the uplink beam signals and downlink beam signals for pathways using the first plurality of receive weights, the first plurality of pathway gains, and the first plurality of transmit weights in accordance with the first plurality of sequential dwell times to generation of the uplink beam signals and downlink beam signals for pathways using the second plurality of receive weights, the second plurality of pathway gains, and the second plurality of transmit weights in accordance with the second plurality of sequential dwell times defined by the specified second beam hop frame definition,

wherein the specified first weight set and the specified first beam hop frame definition support first targets of coverage area and capacity allocation based on a first time-

based traffic estimate, and the specified second weight set and the specified second beam hop frame definition support second targets of coverage area and capacity allocation based on a second time-based traffic estimate.

37. The satellite of claim 36, wherein

the one or more processors are further configured to:

receive and store a plurality of weight sets, including the first weight set and the second weight set, and a plurality of beam hop frame definitions, including the first beam hop frame definition and the second beam hop frame definition, the plurality of weight sets and the plurality of beam hop frame definitions pre-computed and uploaded to the satellite; and

receive a command transmitted from a ground entity,

wherein the one or more beam forming networks are configured to switch in response to receipt of the command.

UNITED STATES PATENT AND TRADEMARK OFFICE

UNITED STATES DEPARTMENT OF COMMERCE
United States Patent and Trademark Office
Address: COMMISSIONER FOR PATENTS
P.O. Box 1450
Alexandria, Virginia 22313-1450
www.uspto.gov

APPLICATION NO.	FILING DATE	FIRST NAMED INVENTOR	ATTORNEY DOCKET NO.	CONFIRMATION NO.
13/098,334	04/29/2011	Mark J. Miller	81094-795065	8507

61668 7590 10/31/2011

KILPATRICK TOWNSEND & STOCKTON, LLP/VIASAT
VIASAT, INC. (CLIENT #017018)
TWO EMBARCADERO CENTER
8TH FLOOR
SAN FRANCISCO, CA 94111

EXAMINER	
FAN, CHIEH M	
ART UNIT	**PAPER NUMBER**
2611	

MAIL DATE	DELIVERY MODE
10/31/2011	PAPER

Please find below and/or attached an Office communication concerning this application or proceeding.

The time period for reply, if any, is set in the attached communication.

UNITED STATES PATENT AND TRADEMARK OFFICE

Commissioner for Patents
United States Patent and Trademark Office
P.O. Box 1450
Alexandria, VA 22313-1450
www.uspto.gov

KILPATRICK TOWNSEND & STOCKTON, LLP/VIASAT
VIASAT, INC. (CLIENT #017018)
TWO EMBARCADERO CENTER
8TH FLOOR
SAN FRANCISCO CA 94111

In re Application of
MILLER et al.
Application No.: 13/098,334
Filed: 23 June 2010
Attorney Docket No.: 81094-795065
For: FLEXIBLE CAPACITY SATELLITE COMMUNICATIONS SYSTEM...

: DECISION ON REQUEST TO
: PARTICIPATE IN THE PATENT
: PROSECUTION HIGHWAY
: PROGRAM AND PETITION
: TO MAKE SPECIAL UNDER
: 37 CFR 1.102(a)

This is a decision on the request to participate in the PCT Patent Prosecution Highway (PCT-PPH) pilot program and the petition under 37 CFR 1.102(a), filed on 13 October 2011, to make the above-identified application special.

The request and petition are **GRANTED**.

Discussion

A grantable request to participate in the PCT-PPH pilot program and petition to make special require:

(1) The U.S. application must have an eligible relationship to one or more PCT applications where the ISA or IPEA are the JPO, EPO, KIPO, NPI, NBPR, or USPTO;

(2) At least one claim in the PCT application has novelty, inventive step, and industrial applicability and must be free of any observations in Box VIII in the latest work product in the international stage or applicant must identify and explain why the claim(s) is/are not subject to the observation in Box VIII;

(3) Applicant must submit a copy of the claim(s) from the PCT application(s) that have novelty, inventive step, and industrial applicability along with an English translation thereof and a statement that the English translation is accurate, if the claims are not in the English language;

(4) All the claims in the U.S. application must sufficiently correspond or be amended to sufficiently correspond to the claim(s) that have novelty, inventive step, and industrial applicability in the PCT application(s);

(5) Examination of the U.S. application has not begun;

(6) Applicant must submit a copy of the latest international work product from the PCT application indicating that the claim(s) have novelty, inventive step, and industrial applicability along with an English translation thereof and a statement that the English translation is accurate if the latest international work product is not in the English language;

(7) Applicant must submit an IDS listing the documents cited by the PCT examiner in the international work product along with copies of documents except U.S. patents or U.S. patent application publications.

The request to participate in the PCT-PPH pilot program and petition comply with the above requirements. Accordingly, the above-identified application has been accorded "special" status.

Telephone inquiries concerning this decision should be directed to Lee W. Young at 571-272-4549.

All other inquiries concerning the examination or status of the application is accessible in the PAIR system at http://www.uspto.gov/ebc.index.html.

This application will be forwarded to the examiner for action on the merits commensurate with this decision once this application's formality reviews have been completed.

Lee W. Young
Quality Assurance Specialist
Technology Center 2600

UNITED STATES PATENT AND TRADEMARK OFFICE

Commissioner for Patents
United States Patent and Trademark Office
P.O. Box 1450
Alexandria, VA 22313-1450
www.uspto.gov

Decision Date : January 11, 2012

In re Application of :

TOSHIHIRO KADOWAKI

DECISION ON PETITION

UNDER CFR 1.313(c)(2)

Application No : 13098396

Filed : 29-Apr-2011

Attorney Docket No : 03500.522864.1

This is an electronic decision on the petition under 37 CFR 1.313(c)(2), filed January 11, 2012 , to withdraw the above-identified application from issue after payment of the issue fee.

The petition is **GRANTED.**

The above-identified application is withdrawn from issue for consideration of a submission under 37 CFR 1.114 (request for continued examination). See 37 CFR 1.313(c)(2).

Petitioner is advised that the issue fee paid in this application cannot be refunded. If, however, this application is again allowed, petitioner may request that it be applied towards the issue fee required by the new Notice of Allowance.

Telephone inquiries concerning this decision should be directed to the Patent Electronic Business Center (EBC) at 866-217-9197.

This application file is being referred to Technology Center AU 2625 for processing of the request for continuing examination under 37 CFR 1.114 .

Office of Petitions

Doc Code: PET.AUTO Document Description: Petition automatically granted by EFS-Web	PTO/SB/140 U.S. Patent and Trademark Office Department of Commerce

Electronic Petition Request	**PETITION TO WITHDRAW AN APPLICATION FROM ISSUE AFTER PAYMENT OF THE ISSUE FEE UNDER 37 CFR 1.313(c)**
Application Number	13098396
Filing Date	29-Apr-2011
First Named Inventor	TOSHIHIRO KADOWAKI
Art Unit	2625
Examiner Name	FRED GUILLERMETY
Attorney Docket Number	03500.522864.1
Title	IMAGE PROCESSING JOB SCHEDULER

An application may be withdrawn from issue for further action upon petition by the applicant. To request that the Office withdraw an application from issue, applicant must file a petition under this section including the fee set forth in § 1.17(h) and a showing of good and sufficient reasons why withdrawal of the application from issue is necessary.

APPLICANT HEREBY PETITIONS TO WITHDRAW THIS APPLICATION FROM ISSUE UNDER 37 CFR 1.313(c).

A grantable petition requires the following items:
(1) Petition fee; and
(2) One of the following reasons:
(a) Unpatentability of one or more claims, which must be accompanied by an unequivocal statement that one or more claims are unpatentable, an amendment to such claim or claims, and an explanation as to how the amendment causes such claim or claims to be patentable;
(b) Consideration of a request for continued examination in compliance with § 1.114 (for a utility or plant application only); or
(c) Express abandonment of the application. Such express abandonment may be in favor of a continuing application, but not a CPA under 37 CFR 1.53(d).

Petition Fee

☐ Applicant claims SMALL ENTITY status. See 37 CFR 1.27.

☐ Applicant is no longer claiming SMALL ENTITY status. See 37 CFR 1.27(g)(2).

☐ Applicant(s) status remains as SMALL ENTITY.

☒ Applicant(s) status remains as other than SMALL ENTITY

Reason for withdrawal from issue

◯ One or more claims are unpatentable ◉ Consideration of a request for continued examination (RCE) (List of Required Documents and Fees) ◯ Applicant hereby expressly abandons the instant application (any attorney/agent signing for this reason must have power of attorney pursuant to 37 CFR 1.32(b)).
RCE request,submission, and fee. ☐ I certify, in accordance with 37 CFR 1.4(d)(4) that : The RCE request ,submission, and fee have already been filed in the above-identified application on ☒ Are attached.
THIS PORTION MUST BE COMPLETED BY THE SIGNATORY OR SIGNATORIES I certify, in accordance with 37 CFR 1.4(d)(4) that I am: ◉ An attorney or agent registered to practice before the Patent and Trademark Office who has been given power of attorney in this application. ◯ An attorney or agent registered to practice before the Patent and Trademark Office, acting in a representative capacity. ◯ A sole inventor ◯ A joint inventor; I certify that I am authorized to sign this submission on behalf of all of the inventors ◯ A joint inventor; all of whom are signing this e-petition ◯ The assignee of record of the entire interest that has properly made itself of record pursuant to 37 CFR 3.71

Signature	/Michael K. O'Neill/
Name	Michael K. O'Neill
Registration Number	32622

UNITED STATES PATENT AND TRADEMARK OFFICE

Commissioner for Patents
United States Patent and Trademark Office
P.O. Box 1450
Alexandria, VA 22313-1450
www.uspto.gov

BAE SYSTEMS
PO BOX 868
NHQ1-719
NASHUA NH 03061-0868

MAILED
AUG 22 2011
OFFICE OF PETITIONS

In re Application of :
Odhner, et al. : DECISION GRANTING
Application No. 13/098,514 : PETITION
Filed: May 2, 2011 :
Attorney Docket No. 20040086DIV :

This is a decision on the petition under 37 CFR 1.47(a), filed August 11, 2011, which is properly treated as a petition under 37 CFR 1.183 to waive § 131's requirement that all of the inventors sign the declaration of prior inventorship.[1]

The petition under 37 CFR 1.183 is **DISMISSED**.

Petitioner is given TWO MONTHS from the mailing date of this decision to reply, correcting the below-noted deficiencies. Any reply should be entitled "Request for Reconsideration of Petition Under 37 CFR 1.183," and should only address the deficiencies noted below, except that the reply may include a 37 CFR 1.131 declaration executed by the non-signing inventor. **Failure to respond will result in abandonment of the application.** Any extensions of time will be governed by 37 CFR 1.136(a).

A petition under 37 CFR 1.183 requires a fee of $400. Petitioner only included an authorization to charge $200. No authorization to charge any additional fees could be found. Accordingly, before the petition can be considered on the merits, petitioner must submit the $400 petition fee.

[1] A petition under 37 CFR 1.47 only applies to the original 37 CFR 1.63 oath or declaration. Here, the declaration submitted on filing did contain the signatures of all the inventors.

Further correspondence with respect to this matter should be addressed as follows:

By mail: Mail Stop Petitions
Commissioner for Patents
P.O. Box 1450
Alexandria VA 22313-1450

By FAX: (571)273-8300
Attn: Office of Petitions

Telephone inquiries concerning this decision should be directed to the undersigned at (571)272-3207.

Cliff Congo
Petitions Attorney
Office of Petitions

UNITED STATES PATENT AND TRADEMARK OFFICE

Commissioner for Patents
United States Patent and Trademark Office
P.O. Box 1450
Alexandria, VA 22313-1450
www.uspto.gov

BAE SYSTEMS
PO BOX 868
NHQ1-719
NASHUA NH 03061-0868

MAILED

SEP 08 2011

OFFICE OF PETITIONS

In re Application of	:	
Odhner, et al.	:	DECISION GRANTING
Application No. 13/098,514	:	PETITION
Filed: May 2, 2011	:	
Attorney Docket No. 20040086DIV	:	

This is a decision on the petition under 37 CFR 1.47(a), filed August 25, 2011, which is properly treated as a petition under 37 CFR 1.183 to waive § 131's requirement that all of the inventors sign the declaration of prior inventorship.[1]

The petition under 37 CFR 1.183 is **DISMISSED**.

Petitioner is given TWO MONTHS from the mailing date of this decision to reply, correcting the below-noted deficiencies. Any reply should be entitled "Request for Reconsideration of Petition Under 37 CFR 1.183," and should only address the deficiencies noted below, except that the reply may include a 37 CFR 1.131 declaration executed by the non-signing inventor. **Failure to respond will result in abandonment of the application.** Any extensions of time will be governed by 37 CFR 1.136(a).

Applicants previously filed a petition under 37 CFR 1.183 on August 11, 2011. However, the petition was dismissed in a decision mailed on August 22, 2011. The petition was dismissed without being considered on the merits because applicants did not submit the required $400 petition fee.

---

[1] A petition under 37 CFR 1.47 only applies to the original 37 CFR 1.63 oath or declaration. Here, the declaration submitted on filing did contain the signatures of all the inventors.

With the instant renewed petition, applicants have submitted the $400 petition fee. Consideration of the petition follows.

A petition under 37 CFR 1.183 to waive the requirements of §1.131 that all of the inventors sign is treated under the same standard as a petition under §1.47. Here, petitioner states that a certified mailing to co-inventor McNeil was returned with no forwarding address. Thereafter, petitioner states that he conducted online searches of the "White Pages", which were unsuccessful.

However, petitioner has provided no copies of the online searches. Such evidence should be submitted with the petition.[2]

Further correspondence with respect to this matter should be addressed as follows:

By mail: Mail Stop Petitions
Commissioner for Patents
P.O. Box 1450
Alexandria VA 22313-1450

By FAX: (571)273-8300
Attn: Office of Petitions

Telephone inquiries concerning this decision should be directed to the undersigned at (571)272-3207.

Cliff Congo
Petitions Attorney
Office of Petitions

---

[2] See MPEP 409.03(d).

UNITED STATES PATENT AND TRADEMARK OFFICE

Commissioner for Patents
United States Patent and Trademark Office
P.O. Box 1450
Alexandria, VA 22313-1450
www.uspto.gov

BAE SYSTEMS
PO BOX 868
NHQ1-719
NASHUA NH 03061-0868

MAILED
OCT 27 2011
OFFICE OF PETITIONS

In re Application of :
Odhner, et al. : DECISION ON PETITION
Application No. 13/098,514 :
Filed: May 2, 2011 :
Attorney Docket No. 20040086DIV :

This is a decision on the renewed petition under 37 CFR 1.183, filed October 19, 2011, to waive § 131's requirement that all of the inventors sign the declaration of prior inventorship.

The petition under 37 CFR 1.183 is **DISMISSED** as moot.

With the instant renewed petition, petitioner has supplied a 37 CFR 1.131 declaration, signed by John A. McNeil, who had previously not signed. As such, consideration of the petition is not necessary, and is dismissed as moot.

The application is being forwarded to Group Art Unit 3641 for consideration of the Amendment filed August 11, 2011, and the 37 CFR 1.131 declaration, filed on August 11, 2011 and October 19, 2011.

Telephone inquiries concerning this decision may be directed to the undersigned at (571)272-3207.

Cliff Congo
Petitions Attorney
Office of Petitions

UNITED STATES PATENT AND TRADEMARK OFFICE

Commissioner for Patents
United States Patent and Trademark Office
P.O. Box 1450
Alexandria, VA 22313-1450
www.uspto.gov

GOTTLIEB RACKMAN & REISMAN PC
270 MADISON AVENUE
8TH FLOOR
NEW YORK NY 10016-0601

MAILED

MAY 24 2011

OFFICE OF PETITIONS

In re Application of :
Yehuda Shmueli et al. :
Application No. 13/098,553 : DECISION ON PETITION
Filed: May 2, 2011 : TO MAKE SPECIAL UNDER
Attorney Docket No. **5987/002** : 37 CFR 1.102(c)(1)
:

This is a decision on the petition under 37 CFR 1.102(c)(1), filed May 11, 2011, to make the above-identified application special based on applicant's age as set forth in MPEP § 708.02, Section IV.

The petition is **GRANTED**.

A grantable petition to make an application special under 37 CFR 1.102(c)(1) and MPEP § 708.02, Section IV: Applicant's Age must be accompanied by evidence showing that at least one of the applicants is 65 years of age, or more, such as a birth certificate or a statement by applicant. No fee is required

The instant petition includes a statement by a registered attorney. Accordingly, the above-identified application has been accorded "special" status.

Telephone inquiries concerning this decision should be directed to JoAnne Burke at 571-272-4584.

All other inquiries concerning either the examination or status of the application should be directed to the Technology Center.

The application is being forwarded to the Technology Center Art Unit 1723 for action on the merits commensurate with this decision.

/JoAnne Burke/
JoAnne Burke
Petitions Examiner
Office of Petitions

UNITED STATES PATENT AND TRADEMARK OFFICE

Commissioner for Patents
United States Patent and Trademark Office
P.O. Box 1450
Alexandria, VA 22313-1450
www.uspto.gov

MAILED

JAN 26 2012

OFFICE OF PETITIONS

LOWE HAUPTMAN HAM
& BERNER, LLP
1700 DIAGONAL ROAD
SUITE 300
ALEXANDRIA VA 22314

: DECISION ON REQUEST TO
: PARTICIPATE IN THE PATENT
: PROSECUTION HIGHWAY
: PROGRAM AND PETITION
: TO MAKE SPECIAL UNDER
: 37 CFR 1.102(a)

In re Application of
EBIHARA, et al
Application No.: 13/098,672
Filed: May 2, 2011
Attorney Docket No.: 4952-063
For: TOOL HOLDER WITH VARIABLE TOOL ROTATION RADIUS, MACHINE TOOL WITH TOOL HOLDER, AND MACHINING METHOD USING MACHINE TOOL

This is a decision on the request to participate in the Patent Prosecution Highway (PPH) program and the petition under 37 CFR 1.102(a), filed December 5, 2011, to make the above-identified application special.

The request and petition are **GRANTED**.

Discussion

A grantable request to participate in the PPH pilot program and petition to make special require:

1. The U.S. application is

    a. a Paris Convention application which either
        i. validly claims priority under 35 U.S.C. 119(a) and 37 CFR 1.55 to one or more applications filed in the JPO, or
        ii. validly claims priority to a PCT application that contains no priority claims, or
    b. a national stage application under the PCT (an application which entered the national stage in the U.S. from a PCT international application after compliance with 35 U.S.C. 371), which PCT application
        i. validly claims priority to an application filed in the JPO, or
        ii. validly claims priority to a PCT application that contains no priority claims, or
        iii. contains no priority claim, or

c. a so-called bypass application filed under 35 U.S.C. 111(a) which validly claims benefit under 35 U.S.C. 120 to a PCT application, which PCT application
    i. validly claims priority to an application filed in the JPO, or
    ii. validly claims priority to a PCT application that contains no priority claims, or
    iii. contains no priority claim;

2. Applicant must submit a copy of:
    a. The allowable/patentable claim(s) from the JPO application(s);
    b. An English translation of the allowable/patentable claim(s) and
    c. A statement that the English translation is accurate;
3. Applicant must:
    a. Ensure all the claims in the U.S. application must sufficiently correspond or be amended to sufficiently correspond to the allowable/patentable claim(s) in the JPO application(s) and
    b. Submit a claims correspondence table in English;
4. Examination of the U.S. application has not begun;
5. Applicant must submit:
    a. Documentation of prior office action:
        i. a copy of the office action(s) just prior to the "Decision to Grant a Patent" from each of the JPO application(s) containing the allowable/patentable claim(s) or
        ii. if the allowable/patentable claims(s) are from a "Notification of Reasons for Refusal" then the Notification of Reasons for Refusal or
        iii. if the JPO application is a first action allowance then no office action from the JPO is necessary should be indicated on the request/petition form;
    b. An English language translation of the JPO Office action from (5)(a)(i)-(ii) above
    c. A statement that the English translation is accurate;
6. Applicant must submit:
    a. An IDS listing the documents cited by the JPO examiner in the JPO office action (unless already submitted in this application)
    b. Copies of the documents except U.S. patents or U.S. patent application publications (unless already submitted in this application);

The request to participate in the PPH pilot program and petition comply with the above requirements. Accordingly, the above-identified application has been accorded "special" status.

Inquiries concerning this decision should be directed to Diane Goodwyn at (571) 272-6735.

All other inquiries concerning the examination or status of the application is accessible in the PAIR system at http://www.uspto.gov/ebc.index.html.

This application is being forwarded to Technology Center AU 3726 for action on the merits commensurate with this decision.

David Bucci
Petitions Examiner
Office of Petitions

Doc Code: PET.GREEN
Document Description: Petition for Green Tech Pilot

PTO/SB/420 (11-10)
Approved for use through 01/31/2011. OMB 0651-0062
U.S. Patent and Trademark Office; U. S. DEPARTMENT OF COMMERCE
Under the Paperwork Reduction Act of 1995, no persons are required to respond to a collection of information unless it displays a valid OMB control number.

PETITION TO MAKE SPECIAL UNDER THE GREEN TECHNOLOGY PILOT PROGRAM

Attorney Docket Number: 26139-18723 US	Application Number (if known): Filed Herewith	Filing date: Filed Herewith
First Named Inventor: Nikos Basil Reppas		
Title: METHODS AND COMPOSITIONS FOR THE RECOMBINANT BIOSYNTHESIS OF N-ALKANES		

APPLICANT HEREBY REQUESTS TO PARTICIPATE IN THE GREEN TECHNOLOGY PILOT PROGRAM FOR THE ABOVE-IDENTIFIED APPLICATION. See Instruction Sheet on page 2.

This petition must be timely filed electronically using the USPTO electronic filing system, EFS-Web.

1. By filing this petition:

   Applicant is requesting early publication: Applicant hereby requests early publication under 37 CFR 1.219 and the publication fee set forth in 37 CFR 1.18(d) accompanies this request.

2. By filing this petition: applicant is agreeing to make an election without traverse in a telephonic interview and elect an invention that meets the eligibility requirements for the Green Technology Pilot Program, if the Office determines that the claims are not obviously directed to a single invention. See Instruction Sheet.

3. This request is accompanied by statements of special status for the eligibility requirement.

4. The application contains no more than three (3) independent claims and twenty (20) total claims.

5. The application does not contain any multiple dependent claims.

6. Other attachments: _____

Signature /Chris Ullsperger/	Date April 29, 2011
Name (Print/Typed) Chris Ullsperger	Registration Number 48,006

Note: *Signatures of all the inventors or assignees of record of the entire interest or their representative(s) are required in accordance with 37 CFR 1.33 and 11.18. Please see 37 CFR 1.4(d) for the form of the signature. If necessary, submit multiple forms for more than one signature see below*.*

☒ *Total of ONE forms are submitted.

The information is required to obtain or retain a benefit by the public which is to file (and by the USPTO to process) an application. Confidentiality is governed by 35 U.S.C. 122 and 37 CFR 1.11 and 1.14. This collection is estimated to take 12 hours to complete, including gathering, preparing, and submitting the completed application form to the USPTO. Time will vary depending upon the individual case. Any comments on the amount of time you require to complete this form and/or suggestions for reducing this burden, should be sent to the Chief Information Officer, U.S. Patent and Trademark Office, U.S. Department of Commerce, P.O. Box 1450, Alexandria, VA 22313-1450. DO NOT SEND FEES OR COMPLETED FORMS TO THIS ADDRESS. **SEND TO: Commissioner for Patents, P.O. Box 1450, Alexandria, VA 22313-1450.**

If you need assistance in completing the form, call 1-800-PTO-9199 and select option 2.

PTO/SB/420 (11-10)
Approved for use through 01/31/2011. OMB 0651-0062
U.S. Patent and Trademark Office; U. S. DEPARTMENT OF COMMERCE
Under the Paperwork Reduction Act of 1995, no persons are required to respond to a collection of information unless it displays a valid OMB control number.

Instruction Sheet for Petition to Make Special Under the Green Technology Pilot Program

(Not to be Submitted to the USPTO)

The following is a summary of the requirements (for more information see the notices (i) "Pilot Program for Green Technologies Including Greenhouse Gas Reduction," (ii) "Elimination of Classification Requirement in the Green Technology Pilot Program," and (iii) "Expansion and Extension of the Green Technology Pilot Program," available on the USPTO web site at http://www.uspto.gov/patents/init_events/green_tech.jsp):

1) The application must be a non-reissue, non-provisional utility application filed under 35 U.S.C. 111 (a), or an international application that has entered the national stage in compliance with 35 U.S.C. 371, irrespective of the filing date of the application. Reexamination proceedings are excluded from this pilot program.

2) The application must contain three or fewer independent claims and twenty or fewer total claims. The application must not contain any multiple dependent claims. For an application that contains more than three independent claims or twenty total claims, or multiple dependent claims, applicant must file a preliminary amendment in compliance with 37 CFR 1.121 to cancel the excess claims and/or the multiple dependent claims at the time the petition to make special is filed.

3) The claims must be directed to a single invention that materially enhances the quality of the environment, or that materially contributes to: (1) the discovery or development of renewable energy resources; (2) the more efficient utilization and conservation of energy resources; or (3) green house gas emission reduction (see the eligibility requirements of sections II and III of the notice (i) cited above). The petition must include a statement that, if the USPTO determines that the claims are directed to multiple inventions (e.g., in a restriction requirement), applicant will agree to make an election without traverse in a telephonic interview, and elect an invention that meets the eligibility requirements in section II or III of the notice (i) cited above.

4) The petition to make special must be timely filed electronically using the USPTO electronic filing system, EFS-Web, and selecting the document description of "Petition for Green Tech Pilot" on the EFS-Web screen. Applicant should use form PTO/SB/420, which is available as a Portable Document Format (PDF) fillable form in EFS-Web and on the USPTO Web site.

5) The petition to make special must be filed at least one day prior to the date that a first Office action (which may be an Office action containing only a restriction requirement) appears in the Patent Application Information Retrieval (PAIR) system. Applicant may check the status of the application using PAIR.

6) The petition to make special must be accompanied by a request for early publication in compliance with 37 CFR 1.219 and the publication fee set forth in 37 CFR 1.18(d).

Privacy Act Statement

The **Privacy Act of 1974 (P.L. 93-579)** requires that you be given certain information in connection with your submission of the attached form related to a patent application or patent. Accordingly, pursuant to the requirements of the Act, please be advised that: (1) the general authority for the collection of this information is 35 U.S.C. 2(b)(2); (2) furnishing of the information solicited is voluntary; and (3) the principal purpose for which the information is used by the U.S. Patent and Trademark Office is to process and/or examine your submission related to a patent application or patent. If you do not furnish the requested information, the U.S. Patent and Trademark Office may not be able to process and/or examine your submission, which may result in termination of proceedings or abandonment of the application or expiration of the patent.

The information provided by you in this form will be subject to the following routine uses:

1. The information on this form will be treated confidentially to the extent allowed under the Freedom of Information Act (5 U.S.C. 552) and the Privacy Act (5 U.S.C 552a). Records from this system of records may be disclosed to the Department of Justice to determine whether disclosure of these records is required by the Freedom of Information Act.
2. A record from this system of records may be disclosed, as a routine use, in the course of presenting evidence to a court, magistrate, or administrative tribunal, including disclosures to opposing counsel in the course of settlement negotiations.
3. A record in this system of records may be disclosed, as a routine use, to a Member of Congress submitting a request involving an individual, to whom the record pertains, when the individual has requested assistance from the Member with respect to the subject matter of the record.
4. A record in this system of records may be disclosed, as a routine use, to a contractor of the Agency having need for the information in order to perform a contract. Recipients of information shall be required to comply with the requirements of the Privacy Act of 1974, as amended, pursuant to 5 U.S.C. 552a(m).
5. A record related to an International Application filed under the Patent Cooperation Treaty in this system of records may be disclosed, as a routine use, to the International Bureau of the World Intellectual Property Organization, pursuant to the Patent Cooperation Treaty.
6. A record in this system of records may be disclosed, as a routine use, to another federal agency for purposes of National Security review (35 U.S.C. 181) and for review pursuant to the Atomic Energy Act (42 U.S.C. 218(c)).
7. A record from this system of records may be disclosed, as a routine use, to the Administrator, General Services, or his/her designee, during an inspection of records conducted by GSA as part of that agency's responsibility to recommend improvements in records management practices and programs, under authority of 44 U.S.C. 2904 and 2906. Such disclosure shall be made in accordance with the GSA regulations governing inspection of records for this purpose, and any other relevant (*i.e.*, GSA or Commerce) directive. Such disclosure shall not be used to make determinations about individuals.
8. A record from this system of records may be disclosed, as a routine use, to the public after either publication of the application pursuant to 35 U.S.C. 122(b) or issuance of a patent pursuant to 35 U.S.C. 151. Further, a record may be disclosed, subject to the limitations of 37 CFR 1.14, as a routine use, to the public if the record was filed in an application which became abandoned or in which the proceedings were terminated and which application is referenced by either a published application, an application open to public inspection or an issued patent.
9. A record from this system of records may be disclosed, as a routine use, to a Federal, State, or local law enforcement agency, if the USPTO becomes aware of a violation or potential violation of law or regulation.

UNITED STATES PATENT AND TRADEMARK OFFICE

UNITED STATES DEPARTMENT OF COMMERCE
United States Patent and Trademark Office
Address: COMMISSIONER FOR PATENTS
P.O. Box 1450
Alexandria, Virginia 22313-1450
www.uspto.gov

APPLICATION NO.	FILING DATE	FIRST NAMED INVENTOR	ATTORNEY DOCKET NO.	CONFIRMATION NO.
13/098,700	05/02/2011	Nikos Basil Reppas	26139-18723	9323

96157 7590 05/31/2011

Joule/Fenwick
Silicon Valley Center
801 California Street
Mountain View, CA 94041

EXAMINER	
ART UNIT	PAPER NUMBER
1645	

NOTIFICATION DATE	DELIVERY MODE
05/31/2011	ELECTRONIC

Please find below and/or attached an Office communication concerning this application or proceeding.

The time period for reply, if any, is set in the attached communication.

Notice of the Office communication was sent electronically on above-indicated "Notification Date" to the following e-mail address(es):

ptoc@fenwick.com
cullsperger@fenwick.com
chong@jouleunlimited.com

UNITED STATES PATENT AND TRADEMARK OFFICE

Commissioner for Patents
United States Patent and Trademark Office
P.O. Box 1450
Alexandria, VA 22313-1450
www.uspto.gov

MAY 3 1 2011

Joule/Fenwick
Silicon Valley Center
801 California Street
Mountain View CA 94041

In re Application of

REPPAS, Nikos *et al.*	:	DECISION ON PETITION
Application No. 13/098700	:	TO MAKE SPECIAL UNDER
Filed: May 2, 2011	:	THE GREEN TECHNOLOGY
Attorney Docket No. 26139-18723	:	PILOT PROGRAM

This is a decision on the petition under 37 CFR 1.102, filed May 2, 2011, to make the above-identified application special under the pilot program for applications pertaining to Green Technologies as set forth in 74 Federal Register Notice 64666 (December 8, 2009) and amended by 75 Federal Register Notice 28554 (May 21, 2010) and 75 Federal Register Notice 69049 (November 10, 2010).

The petition is **GRANTED**.

A grantable petition to make an application special under 37 CFR 1.102 and the pilot program as set forth in 74 FR 64666 must be directed to a nonprovisional application filed under 35 USC 111(a) or be a national stage entry under 35 USC 371, exclusive of any reissue applications.

In order to qualify for special status, the following requirements must be met. 1) The application must have no more than 3 independent claims and no more than 20 total claims. 2) The application must not contain any multiple dependent claims. 3) The petition must state the basis for seeking special status, i.e., the claimed invention either: A) materially enhances the quality of the environment or B) materially contributes to: i) the discovery or development of renewable energy resources, ii) the more efficient utilization and conservation of energy resources, or iii) greenhouse gas emission reduction. 4) If the disclosure is not clear on its face that the claimed invention materially contributes under category (A) or (B), the petition must be accompanied by a statement by the applicant, assignee, or an attorney/agent registered to practice before the Office explaining how the materiality standard is met. 5) A statement that applicant will agree to make an election without traverse in a telephonic interview if a restriction requirement is made by the examiner. 6) The petition to make special must be filed electronically. 7) The petition must be filed at least one day prior to the date that a first Office Action appears in the Patent Application Information Retrieval (PAIR) system. 8) The petition must be accompanied by a request for early publication in compliance with 37 CFR 1.219 and include the publication fee as set forth in 37 CFR 1.18(d).

The requirement for a fee for consideration of the petition to make special for applications pertaining to Green Technologies has been waived.

The instant petition complies with items 1 – 8 above. Accordingly, the above-identified application has been accorded "special" status.

Telephone inquires concerning this decision should be directed to Manjunath Rao at 571-272-0939.

The application is being forwarded to the Technology Center Art Unit 1645 for action on the merits commensurate with this decision.

/Manjunath Rao/

Manjunath Rao
Supervisory Patent Examiner &
POC for TC 1600 Green Tech Petitions
Technology Center 1600

UNITED STATES PATENT AND TRADEMARK OFFICE

UNITED STATES DEPARTMENT OF COMMERCE
United States Patent and Trademark Office
Address: COMMISSIONER FOR PATENTS
P.O. Box 1450
Alexandria, Virginia 22313-1450
www.uspto.gov

APPLICATION NO.	FILING DATE	FIRST NAMED INVENTOR	ATTORNEY DOCKET NO.	CONFIRMATION NO.
13/098,734	05/02/2011	Hiromasa Akahori	27599Z	9397

23389 7590 11/07/2011

SCULLY SCOTT MURPHY & PRESSER, PC
400 GARDEN CITY PLAZA
SUITE 300
GARDEN CITY, NY 11530

EXAMINER	
ALEXANDER, LYLE	

ART UNIT	PAPER NUMBER
1773	

MAIL DATE	DELIVERY MODE
11/07/2011	PAPER

Please find below and/or attached an Office communication concerning this application or proceeding.

The time period for reply, if any, is set in the attached communication.

UNITED STATES PATENT AND TRADEMARK OFFICE

Commissioner for Patents
United States Patent and Trademark Office
P.O. Box 1450
Alexandria, VA 22313-1450
www.uspto.gov

BC

11/7/11

In re application of Hiromasa Akahori et al. Serial No. 13/098,734 Filed: May 02, 2011 For: LIQUID-MIXING APPARATUS, CHEMICAL TESTING APPARATUS, AND ENDOSCOPE PROCESSING APPARTUS	: : : : : : :	DECISION ON REQUEST TO PARTICIPATE IN PATENT PROSECUTION HIGHWAY PROGRAM AND PETITION TO MAKE SPECIAL UNDER 37 CFR 1.102(d)

This is a decision on the request to participate in the Patent Prosecution Highway (PPH) program and the petition under 37 CFR 1.102(d) to make the above-identified application special filed September 28, 2011.

The request and petition are **DENIED**.

A grantable request to participate in the PPH program and petition to make special require:

(1) The U.S. application must validly claim priority under 35 U.S.C. 119(a) to one or more applications filed in the JPO, note where the JPO application with similar claims is not the same application from which the U.S. application claims priority that the applicant must identify the relationship between the JPO application with similar claims and the JPO priority application;

(2) Applicant must submit a copy of:
   a. The allowable/patentable claim(s) from the JPO application(s) or if a copy of the allowable/patentable claims is available via the Dossier Access System (DAS) applicant may request the USPTO to obtain a copy from DAS; however, if the USPTO is unable to obtain a copy from the DAS, the applicant will be required to submit a copy;
   b. An English translation of the allowable/ patentable claim(s), if applicable; and
   c. A statement that the English translation is accurate, if applicable;

(3) Applicant must:
   a. Ensure all the claims in the U.S. application must sufficiently correspond or be amended to sufficiently correspond to the allowable/patentable claim(s) in the JPO application(s); and
   b. Submit a claims correspondence table in English;

(4) Examination of the U.S. application has not begun;

(5) Applicant must submit:

a. Documentation of prior office action:
   i. a copy of the office action(s) just prior to the "Decision to Grant a Patent" from each of the JPO application(s) containing the allowable/patentable claims(s) or
   ii. if the allowable/patentable claim(s) are from "Notification of Reasons for Refusal" then the Notification of Reasons for Refusal or
   iii. if the JPO application is a first action allowance then no office action from the JPO is necessary should be indicated on the request/petition form;
   Further, if a copy of the documents from (i) or (ii) is available via the Dossier Access System (DAS), applicant may request the USPO obtain a copy from the DAS; however, if the USPTO is unable to obtain a copy of the DAS, the applicant will be required to submit a copy;
b. An English language translation of the JPO Office action from (5)(a)(i)-(ii) above if applicable; and
c. A statement that the English translation is accurate;

(6) Applicant must submit:

a. An IDS listing the documents cited by the JPO examiner in the JPO office action (unless already submitted in this application)
b. Copies of documents except U.S. patents or U.S. patent application publications (unless already submitted in this application); and

(7) The required petition fee under 37 CFR 1.17(h).

The request to participate in the PPH program and petition is denied. The request fails to meet requirement item (4) above, since the examination of the U.S. application has begun and a non-final rejection was mailed on September 28, 2011.

Any inquiry regarding this decision should be directed to Blaine Copenheaver, Quality Assurance Specialist, at (571) 272-1156.

All other inquiries concerning the examination or status of the application is accessible in the PAIR system at http://www.uspto.gov/ebc/index.html.

/Blaine Copenheaver/

Blaine Copenheaver
Quality Assurance Specialist
Technology Center 1700

UNITED STATES PATENT AND TRADEMARK OFFICE

UNITED STATES DEPARTMENT OF COMMERCE
United States Patent and Trademark Office
Address: COMMISSIONER FOR PATENTS
P.O. Box 1450
Alexandria, Virginia 22313-1450
www.uspto.gov

APPLICATION NO.	FILING DATE	FIRST NAMED INVENTOR	ATTORNEY DOCKET NO.	CONFIRMATION NO.
13/098,734	05/02/2011	Hiromasa Akahori	27599Z	9397

23389 7590 11/10/2011

SCULLY SCOTT MURPHY & PRESSER, PC
400 GARDEN CITY PLAZA
SUITE 300
GARDEN CITY, NY 11530

EXAMINER	
ALEXANDER, LYLE	

ART UNIT	PAPER NUMBER
1773	

MAIL DATE	DELIVERY MODE
11/10/2011	PAPER

Please find below and/or attached an Office communication concerning this application or proceeding.

The time period for reply, if any, is set in the attached communication.

UNITED STATES PATENT AND TRADEMARK OFFICE

Commissioner for Patents
United States Patent and Trademark Office
P.O. Box 1450
Alexandria, VA 22313-1450
www.uspto.gov

BC

11/14/2011

In re application of Hiromasa Akahori et al. Serial No. 13/098,734 Filed: May 02, 2011 For: LIQUID-MIXING APPARATUS, CHEMICAL TESTING APPARATUS, AND ENDOSCOPE PROCESSING APPARTUS	: : : : : : :	DECISION ON REQUEST TO PARTICIPATE IN PATENT PROSECUTION HIGHWAY PROGRAM AND PETITION TO MAKE SPECIAL UNDER 37 CFR 1.102(d)

This is a decision on the request to participate in the Patent Prosecution Highway (PPH) program and the petition under 37 CFR 1.102(d) to make the above-identified application special filed September 28, 2011. This decision corrects a typographical error on page 2 to clarify that the examiner's office action was issued on October 19, 2011.

The request and petition are **DENIED**.

A grantable request to participate in the PPH program and petition to make special require:

(1) The U.S. application must validly claim priority under 35 U.S.C. 119(a) to one or more applications filed in the JPO, note where the JPO application with similar claims is not the same application from which the U.S. application claims priority that the applicant must identify the relationship between the JPO application with similar claims and the JPO priority application;

(2) Applicant must submit a copy of:
a. The allowable/patentable claim(s) from the JPO application(s) or if a copy of the allowable/patentable claims is available via the Dossier Access System (DAS) applicant may request the USPTO to obtain a copy from DAS; however, if the USPTO is unable to obtain a copy from the DAS, the applicant will be required to submit a copy;
b. An English translation of the allowable/ patentable claim(s), if applicable; and
c. A statement that the English translation is accurate, if applicable;

(3) Applicant must:
a. Ensure all the claims in the U.S. application must sufficiently correspond or be amended to sufficiently correspond to the allowable/patentable claim(s) in the JPO application(s); and
b. Submit a claims correspondence table in English;

(4) Examination of the U.S. application has not begun;

(5) Applicant must submit:
a. Documentation of prior office action:
i. a copy of the office action(s) just prior to the "Decision to Grant a Patent" from each of the JPO application(s) containing the allowable/patentable claims(s) or
ii. if the allowable/patentable claim(s) are from "Notification of Reasons for Refusal" then the Notification of Reasons for Refusal or
iii. if the JPO application is a first action allowance then no office action from the JPO is necessary should be indicated on the request/petition form;
Further, if a copy of the documents from (i) or (ii) is available via the Dossier Access System (DAS), applicant may request the USPO obtain a copy from the DAS; however, if the USPTO is unable to obtain a copy of the DAS, the applicant will be required to submit a copy;
b. An English language translation of the JPO Office action from (5)(a)(i)-(ii) above if applicable; and
c. A statement that the English translation is accurate;

(6) Applicant must submit:
a. An IDS listing the documents cited by the JPO examiner in the JPO office action (unless already submitted in this application)
b. Copies of documents except U.S. patents or U.S. patent application publications (unless already submitted in this application); and

(7) The required petition fee under 37 CFR 1.17(h).

The request to participate in the PPH program and petition is denied. The request fails to meet requirement item (4) above, since the examination of the U.S. application has begun and a non-final rejection was mailed on October 19, 2011.

Any inquiry regarding this decision should be directed to Blaine Copenheaver, Quality Assurance Specialist, at (571) 272-1156.

All other inquiries concerning the examination or status of the application is accessible in the PAIR system at http://www.uspto.gov/ebc/index.html.

/Blaine Copenheaver/

Blaine Copenheaver
Quality Assurance Specialist
Technology Center 1700

UNITED STATES PATENT AND TRADEMARK OFFICE

Commissioner for Patents
United States Patent and Trademark Office
P.O. Box 1450
Alexandria, VA 22313-1450
www.uspto.gov

STANFORD UNIVERSITY OFFICE OF TECHNOLOGY LICENSING
BOZICEVIC, FIELD & FRANCIS LLP
1900 UNIVERSITY AVENUE
SUITE 200
EAST PALO ALTO CA 94303

MAILED
AUG 10 2011
OFFICE OF PETITIONS

In re Application of :
Omar D. Perez et al. :
Application No. 13/098,902 : DECISION DISMISSING PETITION
Filed: May 2, 2011 :
Attorney Docket No: **20017-078001 / 2007P00092** :

This is a decision on the response filed July 18, 2011, treated under 37 CFR 1.182, in response to the Notice of Omitted Items mailed May 18, 2011.

The petition is **DISMISSED**.

The application was filed May 2, 2011. However, on May 18, 2011, the Office of Data Management mailed a Notice of Omitted Items stating that the application had been accorded a filing date of May 2, 2011 but advised that Figures 8-39 described in the specification appeared to have been omitted. The instant response is filed arguing that no figures were omitted on May 2, 2011 as "at the end of this section (page 13, lines 19 to 20), Applicants have incorporated by reference Figures 1 to 39 of U.S. Patent Application 10/193,462 and their corresponding figure legends. These figures and their descriptions were thus not intended to be submitted with this application. In view of the above, Applicants submit that no figures were omitted from this nonprovisional application and request that the application be accepted as deposited.

In view of the response to the Notice, it appears that the applicant is constructively electing to have the application accepted as filed on May 2, 2011 without Figures 8-39.

A review of the materials filed upon application, it appears that the specification contains an error in the description of drawings as it relates to Figures 8-39 and in view thereof, it seems obvious from the petition that no drawing was actually missing on May 2, 2011. Rather, the specification incorrectly referred to Figures 8-39. As a result of the applicants' filing error, however, the "Notice" mailed on May 18, 2011, was correct in stating that Figures 8-39 described in the specification appeared to have been omitted.

In this case, it appears that the applicant is constructively electing to have the application accepted as filed on May 2, 2011 without Figures 8-39.

However, the notice that was sent to the applicant required a substitute specification for the option that applicant chose. Applicant effectively chose option III.A. of the notice. Note that III.A.2. requires "a substitute specification excluding claims that amends the specification to cancel any references to any omitted drawing(s) and..., and a statement that the substitute specification includes no new matter..."

In view of the above, petitioner should submit the substitute specification within TWO (2) MONTHS of the mailing date of this decision. The period set for reply is non-extendable.

This matter will be referred to the Office of Patent Application Processing to await petitioner's submission of the substitute specification wherein the Office of Patent Application Processing will continue processing the application with the originally accorded filing date of May 2, 2011. If no reply is received within the two (2) month period, the application will become abandoned for failure to file a proper reply to the Notice of Omitted Items mailed May 18, 2011.

Finally, since the filing of a petition is unnecessary, for the reasons stated above, no petition fee is due and none has been charged.

Further correspondence with respect to this matter should be addressed as follows:

By mail: Mail Stop Petitions
Commissioner for Patents
P.O. Box 1450
Alexandria VA 22313-1450

By FAX: (571) 273-8300
Attn: Office of Petitions

Telephone inquiries concerning this matter may be directed to the undersigned Petitions Attorney at (571) 272-3212.

Patricia Faison-Ball
Senior Petitions Attorney
Office of Petitions

Doc code : PET.OP.AGE
Description : Petition to make special based on Age/Health

PTO/SB/130 (07-09)
Approved for use through 07/31/2012. OMB 0651- 0031
U.S. Patent and Trademark Office; U.S. DEPARTMENT OF COMMERCE
Under the Paperwork Reduction Act of 1995, no persons are required to respond to a collection of information unless it contains a valid OMB control number

PETITION TO MAKE SPECIAL BASED ON AGE FOR ADVANCEMENT OF EXAMINATION UNDER 37 CFR 1.102(c)(1)

Application Information

Application Number	13/099,017	Confirmation Number	9934	Filing Date	2011-05-02
Attorney Docket Number (optional)	8091.3002.002	Art Unit	1615	Examiner	Neil S Levy
First Named Inventor	John Alex Lopes				
Title of Invention	Disinfecting And Antimicrobial Compositions				

Attention: Office of Petitions
An application may be made special for advancement of examination upon filing of a petition showing that the applicant is 65 years of age, or more. No fee is required with such a petition. See 37 CFR 1.102(c)(1) and MPEP 708.02 (IV).

APPLICANT HEREBY PETITIONS TO MAKE SPECIAL FOR ADVANCEMENT OF EXAMINATION IN THIS APPLICATION UNDER 37 CFR 1.102(c)(1) and MPEP 708.02 (IV) ON THE BASIS OF THE APPLICANT'S AGE.

A grantable petition requires one of the following items:
(1) Statement by one named inventor in the application that he/she is 65 years of age, or more; or
(2) Certification by a registered attorney/agent having evidence such as a birth certificate, passport, driver's license, etc. showing one named inventor in the application is 65 years of age, or more.

Name of Inventor who is 65 years of age, or older

Given Name	Middle Name	Family Name	Suffix
John	Alex	Lopes	

A signature of the applicant or representative is required in accordance with 37 CFR 1.33 and 10.18. Please see 37 CFR 1.4(d) for the format of the signature.

Select (1) or (2) :

○ (1) I am an inventor in this application and I am 65 years of age, or more.

● (2) I am an attorney or agent registered to practice before the Patent and Trademark Office, and I certify that I am in possession of evidence, and will retain such in the application file record, showing that the inventor listed above is 65 years of age, or more.

Signature	/Richard W. Hoffmann, Reg. No. 33711/	Date (YYYY-MM-DD)	2011-12-28
Name	RICHARD W. HOFFMANN	Registration Number	33711

PTO/SB/130 (07-09)
Approved for use through 07/31/2012. OMB 0651- 0031
U.S. Patent and Trademark Office; U.S. DEPARTMENT OF COMMERCE
Under the Paperwork Reduction Act of 1995, no persons are required to respond to a collection of information unless it contains a valid OMB control number

Privacy Act Statement

The Privacy Act of 1974 (P.L. 93-579) requires that you be given certain information in connection with your submission of the attached form related to a patent application or patent. Accordingly, pursuant to the requirements of the Act, please be advised that: (1) the general authority for the collection of this information is 35 U.S.C. 2(b)(2); (2) furnishing of the information solicited is voluntary; and (3) the principal purpose for which the information is used by the U.S. Patent and Trademark Office is to process and/or examine your submission related to a patent application or patent. If you do not furnish the requested information, the U.S. Patent and Trademark Office may not be able to process and/or examine your submission, which may result in termination of proceedings or abandonment of the application or expiration of the patent.

The information provided by you in this form will be subject to the following routine uses:

1. The information on this form will be treated confidentially to the extent allowed under the Freedom of Information Act (5 U.S.C. 552) and the Privacy Act (5 U.S.C. 552a). Records from this system of records may be disclosed to the Department of Justice to determine whether the Fr eedom of Information Act requires disclosure of these records.

2. A record from this system of records may be disclosed, as a routine use, in the course of presenting evidence to a court, magistrate, or administrative tribunal, including disclosures to opposing counsel in the course of settlement negotiations.

3. A record in this system of records may be disclosed, as a routine use, to a Member of Congress submitting a request involving an individual, to whom the record pertains, when the individual has requested assistance from the Member with respect to the subject matter of the record.

4. A record in this system of records may be disclosed, as a routine use, to a contractor of the Agency having need for the information in order to perform a contract. Recipients of information shall be required to comply with the requirements of the Privacy Act of 1974, as amended, pursuant to 5 U.S.C. 552a(m).

5. A record related to an International Application filed under the Patent Cooperation Treaty in this system of records may be disclosed, as a routine use, to the International Bureau of the World Intellectual Property Organization, pursuant to the Patent Cooperation Treaty.

6. A record in this system of records may be disclosed, as a routine use, to another federal agency for purposes of National Security review (35 U.S.C. 181) and for review pursuant to the Atomic Energy Act (42 U.S.C. 218(c)).

7. A record from this system of records may be disclosed, as a routine use, to the Administrator, General Services, or his/her designee, during an inspection of records conducted by GSA as part of that agency's responsibility to recommend improvements in records management practices and programs, under authority of 44 U.S.C. 2904 and 2906. Such disclosure shall be made in accordance with the GSA regulations governing inspection of records for this purpose, and any other relevant (i.e., GSA or Commerce) directive. Such disclosure shall not be used to make determinations about indivi duals.

8. A record from this system of records may be disclosed, as a routine use, to the public after either publication of the application pursuant to 35 U.S.C. 122(b) or issuance of a patent pursuant to 35 U.S.C. 151. Further, a record may be disclosed, subject to the limitations of 37 CFR 1.14, as a routine use, to the public if the record was filed in an application which became abandoned or in which the proceedings were terminated and which application is referenced by either a published application, an application open to public inspections or an issued patent.

9. A record from this system of records may be disclosed, as a routine use, to a Federal, State, or local law enforcement agency, if the USPTO becomes aware of a violation or potential violation of law or regulation.

UNITED STATES PATENT AND TRADEMARK OFFICE

Commissioner for Patents
United States Patent and Trademark Office
P.O. Box 1450
Alexandria, VA 22313-1450
www.uspto.gov

In re Application of
John Alex Lopes

Application No. 13099017

Filed: May 2,2011

Attorney Docket No. 8091.3002.002

:
:
:DECISION ON PETITION TO MAKE SPECIAL
:UNDER 37 CFR 1.102(c)(1)
:

This is a decision on the electronic petition under 37 CFR 1.102 (c)(1), filed 28-DEC-2011 to make the above-identified application special based on applicant's age as set forth in MPEP § 708.02, Section IV.

The petition is **GRANTED**.

A grantable petition to make an application special under 37 CFR 1.102(c)(1), MPEP § 708.02, Section IV: Applicant's Age must include a statement by applicant or a registered practitioner having evidence that applicant is at least 65 years of age. No fee is required.

Accordingly, the above-identified application has been accorded "special" status and will be taken up for action by the examiner upon the completion of all pre-examination processing.

Telephone inquiries concerning this electronic decision should be directed to the Electronic Business Center at 866-217-9197.

All other inquiries concerning either the examination or status of the application should be directed to the Technology Center.

UNITED STATES PATENT AND TRADEMARK OFFICE

UNITED STATES DEPARTMENT OF COMMERCE
United States Patent and Trademark Office
Address: COMMISSIONER FOR PATENTS
P.O. Box 1450
Alexandria, Virginia 22313-1450
www.uspto.gov

APPLICATION NO.	FILING DATE	FIRST NAMED INVENTOR	ATTORNEY DOCKET NO.	CONFIRMATION NO.
13/099,034	05/02/2011	Hideaki Okumoto	8073P1209	9968

7590 03/27/2012

BLAKELY SOKOLOFF TAYLOR & ZAFMAN LLP
1279 OAKMEAD PARKWAY
SUNNYVALE, CA 94085-4040

EXAMINER	
DASTOURI, MEHRDAD	
ART UNIT	PAPER NUMBER
2486	
MAIL DATE	DELIVERY MODE
03/27/2012	PAPER

DECISION GRANTING PETITION UNDER 37 CFR 1.138(d)

The declaration of express abandonment is recognized

This is in response to the petition under 37 CFR 1.138(d), requesting for a refund of any previously paid search fee and excess claims fee in the above-identified application.

The petition is granted.

The express abandonment is recognized. Any previously paid search fee and excess claims fee are hereby refunded.

Telephone inquiries should be directed to the Office of Data Management at (571) 272-4200.

Patent Publication Branch
Office of Data Management

UNITED STATES PATENT AND TRADEMARK OFFICE

UNITED STATES DEPARTMENT OF COMMERCE
United States Patent and Trademark Office
Address: COMMISSIONER FOR PATENTS
P.O. Box 1450
Alexandria, Virginia 22313-1450
www.uspto.gov

APPLICATION NO.	FILING DATE	FIRST NAMED INVENTOR	ATTORNEY DOCKET NO.	CONFIRMATION NO.
13/099,114	05/02/2011	David Brian Jackson	010-0043-US-CIP-1	1134

40271 7590 06/13/2011

NOVAK DRUCE + QUIGG LLP
Laurian Building
2810 Laurian Ln., Suite 200
DUNKIRK, MD 20754

EXAMINER	
ART UNIT	PAPER NUMBER
2447	

MAIL DATE	DELIVERY MODE
06/13/2011	PAPER

Please find below and/or attached an Office communication concerning this application or proceeding.

The time period for reply, if any, is set in the attached communication.

UNITED STATES PATENT AND TRADEMARK OFFICE

Commissioner for Patents
United States Patent and Trademark Office
P.O. Box 1450
Alexandria, VA 22313-1450
www.uspto.gov

Thomas M. Isaacson
NOVAK DRUCE + QUIGG LLP
Laurian Building
2810 Laurian Ln., Suite 200
DUNKIRK, MD 20754

MAILED

JUN 10 2011

DIRECTOR OFFICE
TECHNOLOGY CENTER 2400

In re Application of: JACKSON, David
Serial No.: **13/099,114**
Filed: May 2, 2011
Docket: 010-0043-US-CIP-1
Title: ELASTIC MANAGEMENT OF COMPUTE RESOURCES BETWEEN A WEB SERVER AND AN ON-DEMAND COMPUTE ENVIRONMENT

DECISION ON PETITION TO MAKE SPECIAL FOR NEW APPLICATION UNDER 37 C.F.R. § 1.102 & M.P.E.P. § 708.02

This is a decision on the petition filed on **May 2, 2011** to make the above-identified application special for accelerated examination procedure under 37 C.F.R. 1.102(d).

The petition to make the application special is **DENIED**.

REGULATION AND PRACTICE

To be eligible for accelerated examination under 37 C.F.R. § 1.102(d) and pursuant to the "Change to Practice for Petitions in Patent Applications to Make Special and for Accelerated Examination" published in the Federal Register on June 26, 2006 (71 Fed. Reg. 36323), the following conditions must be satisfied:

I. Conditions Regarding the Application:

1. The application must be a non-reissue utility or design application filed under 37 CFR 1.111 (a);
2. The application, the petition and the required fees must be filed electronically using the USPTO's electronic filing system (EFS), or EFS-web; if not filed electronically, a statement asserting that EFS and EFS-web were not available during the normal business hours;
3. **The application, at the time of filing, must be complete under 37 CFR 1.51 and in condition for examination**;
4. The application must contain three or fewer independent claims and twenty or fewer total claims and the claims must be directed to a single invention.

II. Conditions Regarding the Petition:

The petition must:

1. be filed with the application;
2. include a statement that applicant agrees not to separately argue the patentability of any independent claim during any appeal in the application;
3. include a statement that applicant agrees to make an election without traverse in a telephone interview.
4. include a statement that applicant agrees to conduct such an interview when requested by the examiner.
5. include a statement, made based on a good faith belief, that a preexamination search in compliance with the following requirements, was conducted, including an identification of the filed of search by United States class and subclass, where applicable, and for database searches, the search logic or chemical structure or sequence used as a query, the name of the file(s) searched and the database service, and the date of the search.

The preexamination search must:

5.1. involve U.S. patents and patent application publications, foreign patent documents, and non-patent literature, unless the applicant can justify with reasonable certainty that no references more pertinent than those already identified are likely to be found in the eliminated sources and includes such a justification with this statement;
5.2. be directed to the claimed invention and encompass all of the features of the claims, giving the claims the broadest reasonable interpretation;
5.3. encompass the disclosed features that may be claimed.
6. must provide in support of the petition an accelerated examination support document.

An accelerated examination support document must include:

6.1. an information disclosure statement (IDS) in compliance with 37 CFR 1.98 citing each reference deemed most closely related to the subject matter of each of the claims;
6.2. an identification of all the limitations in the claims that are disclosed by the reference specifying where the limitation is disclosed in the cited reference;
6.3. a detailed explanation of how each of the claims is patentable over the references cited with particularity required by 37 CFR 1.111 (b) and (c);
6.4. a concise statement of the utility of the invention as defined in each of the independent claims (unless the application is a design application);
6.5. a showing of where each limitation of the claims finds support under 35 USC 112, first paragraph, in the written description of the specification. If applicable, the showing must also identify:

(1) each means- (or step) plus-function claim element that invokes consideration under 35 USC 112, sixth paragraph; and
(2) the structure, material, or acts in the specification that corresponds to each means- (or step) plus-function claim element that invokes consideration under 35 USC 112, sixth paragraph; if the application claims the benefit of one or more applications under title 35, United States Code,

the showing must also include where each limitation of the claims finds support under 35 USC 112, first paragraph, in each such application in which such support exists;

6.6. an identification of any cited references that may be disqualified under 35 USC 103(c).

The application as filed is not eligible for the accelerated examination under 37 C.F.R. 1.102(d) because the application fails to meet the requirement at the time of filing as being complete under 37 C.F.R. 1.51 and in condition for examination, namely, condition I.3 *supra*. (see MPEP §708.02(a) I. (D)).

More specifically, in accordance with MPEP §708.02(a) VIII(C), the application must be complete at the time of filing under 37 CFR §1.51 and in condition for examination. The application was not complete under 37 CFR §1.51 (General requisites of an application) because the application did not contain an oath or declaration (see 37 CFR §1.63 and §1.68).

The petition to make special has been **denied** because it is not complete and in condition for examination, e:g. the application omits an item or includes a paper that causes the Office of Initial Patent Examination (OIPE) to mail a notice during the formality review (e.g., notice of incomplete application, **notice to file missing parts**, notice to file corrected application papers, notice of omitted items, or notice of informal application). The notice to file missing parts of nonprovisional application mailed **May 5, 2011** serves as evidence that the application was not complete and in condition for examination at the time of filing.

The opportunity to perfect a petition does **not** apply to applications that are not in condition for examination on filing. See MPEP §708.02(a) II.

Applicant is encouraged to visit http://www.uspto.gov/web/patents/accelerated/ for further details and examples of Accelerated Examiner Pre-Examination Search and Accelerated Examination Support documents.

Applicant's attention is also directed to the following additional deficiencies of the petition:

Regarding to the requirement of MPEP 708.02(a) (I) (1) and item II. 6.1 above, an accelerated examination support document must include: an information disclosure statement (IDS) in compliance with 37 CFR 1.98 citing each reference deemed most closely related to the subject matter of each of the claims.

More specifically, IDS filed with petition lists four (4) U.S. Patents on substitute **1449A/PTO** form. However, only three (3) references are discussed on section: "9(A-B) References Deemed Most Closely Related". That is, Couland et al. (US 6,253,230) was **not** discussed in section **9(B)** Identification of Limitations Disclosed by References.

If Petitioner wishes to cite references that are **not** required in an AESD for the examiner to consider, applicant may submit such references in a **separate IDS** in compliance with 37 CFR §1.97 and §1.98. Applicant should **clearly identify** the IDS of the AESD that is **in support** of the petition to make special and, similarly, applicant should clearly identify the separate IDS that is **not in support** of the petition.

Thus, the AESD is insufficient for *lack of identification and explanation* of Information Disclosure Statements (IDS) in compliance with 37 CFR 1.98 citing each reference deemed **most closely related** to the subject matter of each of the claims and references deemed **not closely related** to the subject matter of the claims. Correction is required.

This deficiency may be corrected by simply filing **two** separate Information Disclosure Statements (IDS), in compliance with 37 CFR 1.98 one citing each reference deemed **most closely related** to the subject matter of each of the claims and another citing references deemed **not closely related** to the subject matter of the claims. Identification as to which IDS is (or not) in support of the petition filed make the above-identified application special for accelerated examination procedure under 37 C.F.R. § 1.102(d) can be made on the PTO/SB/08A form or on an associated transmittal letter with each IDS. These deficiencies are discussed in a FAQ document:

Regarding the requirement of MPEP §708.02(a)(I)(5) and item II 6.5 above, the accelerated examination support document (AESD) must include: a showing of where each limitation of the claim finds support under 35 USC 112, first paragraph, in the written description of the specification. More particularly, if the application claims the benefit of one or more applications under title 35, United States Code, the showing must also include where each limitation of the claims finds support under 35 USC §112, first paragraph, in ***each*** such application in which such supports exists.

According to the Oath/declaration filed, and Application Data Sheet (ADS) Applicants claim domestic priority benefits under 35 U.S.C. §120 to Provisional Applications **11/279,007** filed 04/07/2006 and **60/669,278** filed 04/07/2005. As such, showing must also include where each limitation of the claims finds support under 35 USC §112, first paragraph, in both application where supports exists.

Regarding the requirement of MPEP §708.02(a)(I)(5) and item II 6.5 above, the accelerated examination support document (AESD) must include: a showing of where each limitation of the claims finds support under 35 USC §112, first paragraph, in the written description of the specification.

AESD's showing (mapping) of where each limitation of the claims finds support under 35 USC §112, first paragraph, in the written description of the specification is found deficient. The mapping set forth in the AESD would materially effect examination of the application. Cited paragraphs [0012-0021] fail to show where **each** limitation of the claims [i.e. **all**] finds support under 35 USC §112, first paragraph, in the written description of the specification.

For the above-mentioned reasons, the petition is **denied**. The application will therefore be taken up by the examiner for action in its regular turn.

Any inquiry regarding this decision should be directed to Beatriz Prieto, Quality Assurance Specialist, at (571) 272-3902. A second point of contact is Kim Huynh at (571) 272-4147.

/Beatriz Prieto/

Beatriz Prieto, Quality Assurance Specialist
Technology Center 2400
Networking, Multiplexing, Cable and Security

UNITED STATES PATENT AND TRADEMARK OFFICE

UNITED STATES DEPARTMENT OF COMMERCE
United States Patent and Trademark Office
Address: COMMISSIONER FOR PATENTS
P.O. Box 1450
Alexandria, Virginia 22313-1450
www.uspto.gov

APPLICATION NO.	FILING DATE	FIRST NAMED INVENTOR	ATTORNEY DOCKET NO.	CONFIRMATION NO.
13/099,116	05/02/2011	David Brian JACKSON	010-0043-US-CIP	1138

40271 7590 06/13/2011

NOVAK DRUCE + QUIGG LLP
Laurian Building
2810 Laurian Ln., Suite 200
DUNKIRK, MD 20754

EXAMINER	
ART UNIT	PAPER NUMBER
2447	

MAIL DATE	DELIVERY MODE
06/13/2011	PAPER

Please find below and/or attached an Office communication concerning this application or proceeding.

The time period for reply, if any, is set in the attached communication.

UNITED STATES PATENT AND TRADEMARK OFFICE

Commissioner for Patents
United States Patent and Trademark Office
P.O. Box 1450
Alexandria, VA 22313-1450
www.uspto.gov

MAILED

JUN 10 2011

DIRECTOR OFFICE
TECHNOLOGY CENTER 2400

Thomas M. Isaacson
NOVAK DRUCE + QUIGG LLP
Laurian Building
2810 Laurian Ln., Suite 200
DUNKIRK, MD 20754

In re Application of: JACKSON, David
Serial No.: **13/099,116**
Filed: May 2, 2011
Docket: 010-0043-US-CIP
Title: ELASTIC MANAGEMENT OF COMPUTE RESOURCES BETWEEN A WEB SERVER AND AN ON-DEMAND COMPUTE ENVIRONMENT

DECISION ON PETITION TO MAKE SPECIAL FOR NEW APPLICATION UNDER 37 C.F.R. § 1.102 & M.P.E.P. § 708.02

This is a decision on the petition filed on **May 2, 2011** to make the above-identified application special for accelerated examination procedure under 37 C.F.R. 1.102(d).

The petition to make the application special is **DENIED**.

REGULATION AND PRACTICE

To be eligible for accelerated examination under 37 C.F.R. § 1.102(d) and pursuant to the "Change to Practice for Petitions in Patent Applications to Make Special and for Accelerated Examination" published in the Federal Register on June 26, 2006 (71 Fed. Reg. 36323), the following conditions must be satisfied:

I. Conditions Regarding the Application:

1. The application must be a non-reissue utility or design application filed under 37 CFR 1.111 (a);
2. The application, the petition and the required fees must be filed electronically using the USPTO's electronic filing system (EFS), or EFS-web; if not filed electronically, a statement asserting that EFS and EFS-web were not available during the normal business hours;
3. **The application, at the time of filing, must be complete under 37 CFR 1.51 and in condition for examination**;
4. The application must contain three or fewer independent claims and twenty or fewer total claims and the claims must be directed to a single invention.

II. Conditions Regarding the Petition:

The petition must:

1. be filed with the application;
2. include a statement that applicant agrees not to separately argue the patentability of any independent claim during any appeal in the application;
3. include a statement that applicant agrees to make an election without traverse in a telephone interview.
4. include a statement that applicant agrees to conduct such an interview when requested by the examiner.
5. include a statement, made based on a good faith belief, that a preexamination search in compliance with the following requirements, was conducted, including an identification of the filed of search by United States class and subclass, where applicable, and for database searches, the search logic or chemical structure or sequence used as a query, the name of the file(s) searched and the database service, and the date of the search.

The preexamination search must:

5.1. involve U.S. patents and patent application publications, foreign patent documents, and non-patent literature, unless the applicant can justify with reasonable certainty that no references more pertinent than those already identified are likely to be found in the eliminated sources and includes such a justification with this statement;

5.2. be directed to the claimed invention and encompass all of the features of the claims, giving the claims the broadest reasonable interpretation;

5.3. encompass the disclosed features that may be claimed.

6. must provide in support of the petition an accelerated examination support document.

An accelerated examination support document must include:

6.1. an information disclosure statement (IDS) in compliance with 37 CFR 1.98 citing each reference deemed most closely related to the subject matter of each of the claims;

6.2. an identification of all the limitations in the claims that are disclosed by the reference specifying where the limitation is disclosed in the cited reference;

6.3. a detailed explanation of how each of the claims is patentable over the references cited with particularity required by 37 CFR 1.111 (b) and (c);

6.4. a concise statement of the utility of the invention as defined in each of the independent claims (unless the application is a design application);

6.5. a showing of where each limitation of the claims finds support under 35 USC 112, first paragraph, in the written description of the specification. If applicable, the showing must also identify:

(1) each means- (or step) plus-function claim element that invokes consideration under 35 USC 112, sixth paragraph; and

(2) the structure, material, or acts in the specification that corresponds to each means- (or step) plus-function claim element that invokes consideration under 35 USC 112, sixth paragraph; if the application claims the benefit of one or more applications under title 35, United States Code,

the showing must also include where each limitation of the claims finds support under 35 USC 112, first paragraph, in each such application in which such support exists;

6.6. an identification of any cited references that may be disqualified under 35 USC 103(c).

The application as filed is not eligible for the accelerated examination under 37 C.F.R. 1.102(d) because the application fails to meet the requirement at the time of filing as being complete under 37 C.F.R. 1.51 and in condition for examination, namely, condition I.3 *supra*. (see MPEP §708.02(a) I. (D)).

More specifically, in accordance with MPEP §708.02(a) VIII(C), the application must be complete at the time of filing under 37 CFR §1.51 and in condition for examination. The application was not complete under 37 CFR §1.51 (General requisites of an application) because the application did not contain an oath or declaration (see 37 CFR §1.63 and §1.68).

The petition to make special has been **denied** because it is not complete and in condition for examination, e.g. the application omits an item or includes a paper that causes the Office of Initial Patent Examination (OIPE) to mail a notice during the formality review (e.g., notice of incomplete application, **notice to file missing parts**, notice to file corrected application papers, notice of omitted items, or notice of informal application). The notice to file missing parts of nonprovisional application mailed May 5, 2011 serves as evidence that the application was not complete and in condition for examination at the time of filing.

The opportunity to perfect a petition does **not** apply to applications that are not in condition for examination on filing. See MPEP §708.02(a) II.

Applicant is encouraged to visit http://www.uspto.gov/web/patents/accelerated/ for further details and examples of Accelerated Examiner Pre-Examination Search and Accelerated Examination Support documents.

Applicant's attention is also directed to the following additional deficiencies of the petition:

Regarding to the requirement of MPEP 708.02(a) (I) (1) and item II. 6.1 above, an accelerated examination support document must include: an information disclosure statement (IDS) in compliance with 37 CFR 1.98 citing each reference deemed most closely related to the subject matter of each of the claims.

More specifically, IDS filed with petition lists four (4) U.S. Patents on substitute **1449A/PTO** form. However, only three (3) references are discussed on section: "9(A-B) References Deemed Most Closely Related". That is, Couland et al. (US 6,253,230) was **not** discussed in section **9(B)** Identification of Limitations Disclosed by References.

If Petitioner wishes to cite references that are **not** required in an AESD for the examiner to consider, applicant may submit such references in a **separate IDS** in compliance with 37 CFR §1.97 and §1.98. Applicant should **clearly identify** the IDS of the AESD that is **in support** of the petition to make special and, similarly, applicant should clearly identify the separate IDS that is **not in support** of the petition.

Thus, the AESD is insufficient for *lack of identification and explanation* of Information Disclosure Statements (IDS) in compliance with 37 CFR 1.98 citing each reference deemed **most closely related** to the subject matter of each of the claims and references deemed **not closely related** to the subject matter of the claims. Correction is required.

This deficiency may be corrected by simply filing **two** separate Information Disclosure Statements (IDS), in compliance with 37 CFR 1.98 one citing each reference deemed **most closely related** to the subject matter of each of the claims and another citing references deemed **not closely related** to the subject matter of the claims. Identification as to which IDS is (or not) in support of the petition filed make the above-identified application special for accelerated examination procedure under 37 C.F.R. § 1.102(d) can be made on the PTO/SB/08A form or on an associated transmittal letter with each IDS. These deficiencies are discussed in a FAQ document:

Regarding the requirement of MPEP §708.02(a)(I)(5) and item II 6.5 above, the accelerated examination support document (AESD) must include: a showing of where each limitation of the claim finds support under 35 USC 112, first paragraph, in the written description of the specification. More particularly, if the application claims the benefit of one or more applications under title 35, United States Code, the showing must also include where each limitation of the claims finds support under 35 USC §112, first paragraph, in ***each*** such application in which such supports exists.

According to the Oath/declaration filed, and Application Data Sheet (ADS) Applicants claim domestic priority benefits under 35 U.S.C. §120 to Provisional Applications **11/279,007** filed 04/07/2006 and **60/669,278** filed 04/07/2005. As such, showing must also include where each limitation of the claims finds support under 35 USC §112, first paragraph, in both application where supports exists.

Regarding the requirement of MPEP §708.02(a)(I)(5) and item II 6.5 above, the accelerated examination support document (AESD) must include: a showing of where each limitation of the claims finds support under 35 USC §112, first paragraph, in the written description of the specification.

AESD's showing (mapping) of where each limitation of the claims finds support under 35 USC §112, first paragraph, in the written description of the specification is found deficient. The mapping set forth in the AESD would materially effect examination of the application. Cited paragraphs [0012-0021] fail to show where **each** limitation of the claims [i.e. **all**] finds support under 35 USC §112, first paragraph, in the written description of the specification.

For the above-mentioned reasons, the petition is **denied**. The application will therefore be taken up by the examiner for action in its regular turn.

Any inquiry regarding this decision should be directed to Beatriz Prieto, Quality Assurance Specialist, at (571) 272-3902. A second point of contact is Kim Huynh at (571) 272-4147.

/Beatriz Prieto/

Beatriz Prieto, Quality Assurance Specialist
Technology Center 2400
Networking, Multiplexing, Cable and Security

UNITED STATES PATENT AND TRADEMARK OFFICE

Commissioner for Patents
United States Patent and Trademark Office
P.O. Box 1450
Alexandria, VA 22313-1450
www.uspto.gov

In re Application of
Marshall Medoff

Application No. 13099151

Filed: May 2,2011

Attorney Docket No. 00127-1US

:
:
:DECISION ON PETITION TO MAKE SPECIAL
:UNDER 37 CFR 1.102(c)(1)
:

This is a decision on the electronic petition under 37 CFR 1.102 (c)(1), filed 12-JUL-2011 to make the above-identified application special based on applicant's age as set forth in MPEP § 708.02, Section IV.

The petition is **GRANTED**.

A grantable petition to make an application special under 37 CFR 1.102(c)(1), MPEP § 708.02, Section IV: Applicant's Age must include a statement by applicant or a registered practitioner having evidence that applicant is at least 65 years of age. No fee is required.

Accordingly, the above-identified application has been accorded "special" status and will be taken up for action by the examiner upon the completion of all pre-examination processing.

Telephone inquiries concerning this electronic decision should be directed to the Electronic Business Center at 866-217-9197.

All other inquiries concerning either the examination or status of the application should be directed to the Technology Center.

Doc code : PET.OP.AGE
Description : Petition to make special based on Age/Health

PTO/SB/130 (07-09)
Approved for use through 07/31/2012. OMB 0651- 0031
U.S. Patent and Trademark Office; U.S. DEPARTMENT OF COMMERCE
Under the Paperwork Reduction Act of 1995, no persons are required to respond to a collection of information unless it contains a valid OMB control number

PETITION TO MAKE SPECIAL BASED ON AGE FOR ADVANCEMENT OF EXAMINATION UNDER 37 CFR 1.102(c)(1)

Application Information

Application Number	13/099,151	Confirmation Number	1197	Filing Date	2011-05-02
Attorney Docket Number (optional)	00127-1US	Art Unit		Examiner	
First Named Inventor	Marshall MEDOFF				
Title of Invention	PROCESSING BIOMASS				

Attention: Office of Petitions

An application may be made special for advancement of examination upon filing of a petition showing that the applicant is 65 years of age, or more. No fee is required with such a petition. See 37 CFR 1.102(c)(1) and MPEP 708.02 (IV).

APPLICANT HEREBY PETITIONS TO MAKE SPECIAL FOR ADVANCEMENT OF EXAMINATION IN THIS APPLICATION UNDER 37 CFR 1.102(c)(1) and MPEP 708.02 (IV) ON THE BASIS OF THE APPLICANT'S AGE.

A grantable petition requires one of the following items:
(1) Statement by one named inventor in the application that he/she is 65 years of age, or more; or
(2) Certification by a registered attorney/agent having evidence such as a birth certificate, passport, driver's license, etc. showing one named inventor in the application is 65 years of age, or more.

Name of Inventor who is 65 years of age, or older

Given Name	Middle Name	Family Name	Suffix
Marshall		MEDOFF	

A signature of the applicant or representative is required in accordance with 37 CFR 1.33 and 10.18. Please see 37 CFR 1.4(d) for the format of the signature.

Select (1) or (2) :

○ (1) I am an inventor in this application and I am 65 years of age, or more.

● (2) I am an attorney or agent registered to practice before the Patent and Trademark Office, and I certify that I am in possession of evidence, and will retain such in the application file record, showing that the inventor listed above is 65 years of age, or more.

Signature	/Celia H. Leber/	Date (YYYY-MM-DD)	2011-07-12
Name	Celia H. Leber	Registration Number	33524

PTO/SB/130 (07-09)
Approved for use through 07/31/2012. OMB 0651- 0031
U.S. Patent and Trademark Office; U.S. DEPARTMENT OF COMMERCE
Under the Paperwork Reduction Act of 1995, no persons are required to respond to a collection of information unless it contains a valid OMB control number

Privacy Act Statement

The Privacy Act of 1974 (P.L. 93-579) requires that you be given certain information in connection with your submission of the attached form related to a patent application or patent. Accordingly, pursuant to the requirements of the Act, please be advised that: (1) the general authority for the collection of this information is 35 U.S.C. 2(b)(2); (2) furnishing of the information solicited is voluntary; and (3) the principal purpose for which the information is used by the U.S. Patent and Trademark Office is to process and/or examine your submission related to a patent application or patent. If you do not furnish the requested information, the U.S. Patent and Trademark Office may not be able to process and/or examine your submission, which may result in termination of proceedings or abandonment of the application or expiration of the patent.

The information provided by you in this form will be subject to the following routine uses:

1. The information on this form will be treated confidentially to the extent allowed under the Freedom of Information Act (5 U.S.C. 552) and the Privacy Act (5 U.S.C. 552a). Records from this system of records may be disclosed to the Department of Justice to determine whether the Fr eedom of Information Act requires disclosure of these records.

2. A record from this system of records may be disclosed, as a routine use, in the course of presenting evidence to a court, magistrate, or administrative tribunal, including disclosures to opposing counsel in the course of settlement negotiations.

3. A record in this system of records may be disclosed, as a routine use, to a Member of Congress submitting a request involving an individual, to whom the record pertains, when the individual has requested assistance from the Member with respect to the subject matter of the record.

4. A record in this system of records may be disclosed, as a routine use, to a contractor of the Agency having need for the information in order to perform a contract. Recipients of information shall be required to comply with the requirements of the Privacy Act of 1974, as amended, pursuant to 5 U.S.C. 552a(m).

5. A record related to an International Application filed under the Patent Cooperation Treaty in this system of records may be disclosed, as a routine use, to the International Bureau of the World Intellectual Property Organization, pursuant to the Patent Cooperation Treaty.

6. A record in this system of records may be disclosed, as a routine use, to another federal agency for purposes of National Security review (35 U.S.C. 181) and for review pursuant to the Atomic Energy Act (42 U.S.C. 218(c)).

7. A record from this system of records may be disclosed, as a routine use, to the Administrator, General Services, or his/her designee, during an inspection of records conducted by GSA as part of that agency's responsibility to recommend improvements in records management practices and programs, under authority of 44 U.S.C. 2904 and 2906. Such disclosure shall be made in accordance with the GSA regulations governing inspection of records for this purpose, and any other relevant (i.e., GSA or Commerce) directive. Such disclosure shall not be used to make determinations about indivi duals.

8. A record from this system of records may be disclosed, as a routine use, to the public after either publication of the application pursuant to 35 U.S.C. 122(b) or issuance of a patent pursuant to 35 U.S.C. 151. Further, a record may be disclosed, subject to the limitations of 37 CFR 1.14, as a routine use, to the public if the record was filed in an application which became abandoned or in which the proceedings were terminated and which application is referenced by either a published application, an application open to public inspections or an issued patent.

9. A record from this system of records may be disclosed, as a routine use, to a Federal, State, or local law enforcement agency, if the USPTO becomes aware of a violation or potential violation of law or regulation.

Doc Code: PET.GREEN
Document Description: Petition for Green Tech Pilot

PTO/SB/420 (05-10)
Approved for use through 05/31/2010. OMB 0651-0062
U.S. Patent and Trademark Office; U. S. DEPARTMENT OF COMMERCE
Under the Paperwork Reduction Act of 1995, no persons are required to respond to a collection of information unless it displays a valid OMB control number.

PETITION TO MAKE SPECIAL UNDER THE GREEN TECHNOLOGY PILOT PROGRAM

Attorney Docket Number: 0465-2812PUS1	Application Number (if known): 13/099,173	Filing date: May 02, 2011
First Named Inventor: Sung Yong PARK		
Title: BACK LIGHT UNIT		

APPLICANT HEREBY REQUESTS TO PARTICIPATE IN THE GREEN TECHNOLOGY PILOT PROGRAM FOR THE ABOVE-IDENTIFIED APPLICATION. See Instruction Sheet on page 2.

This petition must be timely filed electronically using the USPTO electronic filing system, EFS-Web.

1. By filing this petition:

   Applicant is requesting early publication: Applicant hereby requests early publication under 37 CFR 1.219 and the publication fee set forth in 37 CFR 1.18(d) accompanies this request.

2. By filing this petition: applicant is agreeing to make an election without traverse in a telephonic interview and elect an invention that meets the eligibility requirements set forth in the notice titled "Pilot Program for Green Technologies Including Greenhouse Gas Reduction," as modified by the notice titled "Elimination of Classification Requirement in the Green Technology Pilot Program," each of which was published in the Federal Register, if the Office determines that the claims are not obviously directed to a single invention.

3. This request is accompanied by statements of special status for the eligibility requirement.

4. The application contains no more than three (3) independent claims and twenty (20) total claims.

5. The application does not contain any multiple dependent claims.

6. Other attachments: Preliminary Amendment

Signature	Date June 13, 2011
Name (Print/Typed) James T. Eller, Jr.	Registration Number 39538

Note: *Signatures of all the inventors or assignees of record of the entire interest or their representative(s) are required in accordance with 37 CFR 1.33 and 11.18. Please see 37 CFR 1.4(d) for the form of the signature. If necessary, submit multiple forms for more than one signature, see below*.*

☐ *Total of _____ forms are submitted.

The information is required to obtain or retain a benefit by the public which is to file (and by the USPTO to process) an application. Confidentiality is governed by 35 U.S.C. 122 and 37 CFR 1.11 and 1.14. This collection is estimated to take 12 hours to complete, including gathering, preparing, and submitting the completed application form to the USPTO. Time will vary depending upon the individual case. Any comments on the amount of time you require to complete this form and/or suggestions for reducing this burden, should be sent to the Chief Information Officer, U.S. Patent and Trademark Office, U.S. Department of Commerce, P.O. Box 1450, Alexandria, VA 22313-1450. DO NOT SEND FEES OR COMPLETED FORMS TO THIS ADDRESS. **SEND TO: Commissioner for Patents, P.O. Box 1450, Alexandria, VA 22313-1450.**

If you need assistance in completing the form, call 1-800-PTO-9199 and select option 2.

Docket No.: 0465-2812PUS1
(Patent)

IN THE UNITED STATES PATENT AND TRADEMARK OFFICE

Patent Application of:	Sung Yong PARK et al.		
Application No.:	13/099,173	Confirmation No.:	1248
Filed:	May 02, 2011	Art Unit:	2875
For:	BACK LIGHT UNIT	Examiner:	To be assigned

STATEMENT OF SPECIAL STATUS FOR THE ELIGIBILITY REQUIREMENT UNDER THE GREEN TECHNOLOGY PILOT PROGRAM

Commissioner for Patents
P.O. Box 1450
Alexandria, VA 22313-1450

Sir:

In support of the Petition to Make Special Under the Green Technology Pilot Program, it is respectfully submitted that the basis for the requested special status is that the invention in the above-identified patent application materially contributes to the development of environmental quality and energy conservation. Specifically, the claimed invention relates to a backlight unit illuminated by light emitting diodes.

A backlight unit illuminated by light emitting diodes according to the present invention has a much longer life-span than conventional light sources such as fluorescent tubes or other traditional backlight illumination sources. Also, a backlight unit illuminated by light emitting diodes according to the present invention uses less energy or power to operate than other traditional backlight illumination sources. Thus, the environmental quality is significantly improved and energy is conserved.

Additionally, by filing this petition, Applicant agrees to make an election without traverse in a telephone interview and elect an invention that meets the eligibility requirements set forth in the notice titled "Pilot Program for Green Technologies Including Greenhouse Gas Reduction," as modified by the notice titled "Elimination of Classification Requirement in the Green

Technology Pilot Program," each of which was published in the Federal Register, if the Office determines that the claims are not obviously directed to a single invention.

It is also submitted that this application meets the eligibility requirements to participate in the Green Technology Pilot Program, as listed in the attached Petition to Make Special Under the Green Technology Pilot Program.

Accordingly, it is respectfully requested the Petition be granted.

Should there be any outstanding matters that need to be resolved in the present application, the Examiner is respectfully requested to contact the undersigned below to conduct an interview in an effort to expedite prosecution in connection with the present application.

If necessary, the Director is hereby authorized in this, concurrent, and future replies to charge any fees required during the pendency of the above-identified application or credit any overpayment to Deposit Account No. 02-2448.

Dated: June 13, 2011

Respectfully submitted,

By _____

James T. Eller, Jr.
Registration No.: 39538
BIRCH, STEWART, KOLASCH & BIRCH, LLP
8110 Gatehouse Road, Suite 100 East
P.O. Box 747
Falls Church, VA 22040-0747
703-205-8000

UNITED STATES PATENT AND TRADEMARK OFFICE

UNITED STATES DEPARTMENT OF COMMERCE
United States Patent and Trademark Office
Address: COMMISSIONER FOR PATENTS
P.O. Box 1450
Alexandria, Virginia 22313-1450
www.uspto.gov

APPLICATION NO.	FILING DATE	FIRST NAMED INVENTOR	ATTORNEY DOCKET NO.	CONFIRMATION NO.
13/099,173	05/02/2011	Sung Yong PARK	0465-2812PUS1	1248

2292 7590 06/22/2011
BIRCH STEWART KOLASCH & BIRCH
PO BOX 747
FALLS CHURCH, VA 22040-0747

EXAMINER	
ART UNIT	PAPER NUMBER
2875	

NOTIFICATION DATE	DELIVERY MODE
06/22/2011	ELECTRONIC

Please find below and/or attached an Office communication concerning this application or proceeding.

The time period for reply, if any, is set in the attached communication.

Notice of the Office communication was sent electronically on above-indicated "Notification Date" to the following e-mail address(es):

mailroom@bskb.com

UNITED STATES PATENT AND TRADEMARK OFFICE

Commissioner for Patents
United States Patent and Trademark Office
P.O. Box 1450
Alexandria, VA 22313-1450
www.uspto.gov

BIRCH STEWART KOLASCH & BIRCH
PO BOX 747
FALLS CHURCH VA 22040-0747

In re Application of	:	
PARK et al.	:	DECISION ON PETITION
Application No. 13/099,173	:	TO MAKE SPECIAL UNDER
Filed: May 02, 2011	:	THE GREEN TECHNOLOGY
Attorney Docket No. 0465-2812PUS1	:	PILOT PROGRAM

This is a decision on the petition under 37 CFR 1.102, filed on June 13, 2011, to make the above-identified application special under the pilot program for applications pertaining to Green Technologies as set forth 74 Federal Register Notice 64666 (December 8, 2009) and amended by 75 Federal Register Notice 28554 (May 21, 2010) and 75 Federal Register Notice 69049 (November 10, 2010).

The petition is **GRANTED**.

A grantable petition to make an application special under 37 CFR 1.102 and the pilot program as set forth in 74 FR 64666 must be directed to a nonprovisional application filed under 35 USC 111(a) or be a national stage entry under 35 USC 371, exclusive of any reissue applications.

In order to qualify for special status, the following requirements must be met. 1) The application must have no more than 3 independent claims and no more than 20 total claims. 2) The application must not contain any multiple dependent claims. 3) The petition must state the basis for seeking special status, i.e., the claimed invention either: A) materially enhances the quality of the environment or B) materially contributes to: i) the discovery or development of renewable energy resources, ii) the more efficient utilization and conservation of energy resources, or iii) greenhouse gas emission reduction. 4) If the disclosure is not clear on its face that the claimed invention materially contributes under category (A) or (B), the petition must be accompanied by a statement by the applicant, assignee, or an attorney/agent registered to practice before the Office explaining how the materiality standard is met. 5) A statement that applicant will agree to make an election without traverse in a telephonic interview if a restriction requirement is made by the examiner. 6) The petition to make special must be filed electronically. 7) The petition must be filed at least one day prior to the date that a first Office Action appears in the Patent Application Information Retrieval (PAIR) system. 8) The petition must be accompanied by a request for early publication in compliance with 37 CFR 1.219 and include the publication fee as set forth in 37 CFR 1.18(d).

The requirement for a fee for consideration of the petition to make special for applications pertaining to Green Technologies has been waived.

The instant petition complies with items 1 – 8 above. Accordingly, the above-identified application has been accorded "special" status.

Telephone inquires concerning this decision should be directed to Lee W. Young at 571-272-4549.

The application is being forwarded to the Technology Center Art Unit 2875 for action on the merits commensurate with this decision.

Lee W. Young
Quality Assurance Specialist
Technology Center 2800

UNITED STATES PATENT AND TRADEMARK OFFICE

UNITED STATES DEPARTMENT OF COMMERCE
United States Patent and Trademark Office
Address: COMMISSIONER FOR PATENTS
P.O. Box 1450
Alexandria, Virginia 22313-1450
www.uspto.gov

APPLICATION NO.	FILING DATE	FIRST NAMED INVENTOR	ATTORNEY DOCKET NO.	CONFIRMATION NO.
13/099,198	05/02/2011	Michael P. Nova	113452-302US2	1290

27189 7590 05/19/2011

PROCOPIO, CORY, HARGREAVES & SAVITCH LLP
525 B STREET
SUITE 2200
SAN DIEGO, CA 92101

EXAMINER	
ART UNIT	PAPER NUMBER
1639	

NOTIFICATION DATE	DELIVERY MODE
05/19/2011	ELECTRONIC

Please find below and/or attached an Office communication concerning this application or proceeding.

The time period for reply, if any, is set in the attached communication.

Notice of the Office communication was sent electronically on above-indicated "Notification Date" to the following e-mail address(es):

docketing@procopio.com
PTONotifications@procopio.com

UNITED STATES PATENT AND TRADEMARK OFFICE

Commissioner for Patents
United States Patent and Trademark Office
P.O. Box 1450
Alexandria, VA 22313-1450
www.uspto.gov

MAY 19 2011

PROCOPIO, CORY, HARGREAVES & SAVITCH LLP
525 B STREET
SUITE 2200
SAN DIEGO CA 92101

In re Application of:
Nova et al.

Serial No.: 13/099,198

Filed: May 2, 2011

Docket**113452-302US2**

Title: **MULTIPLEXED ASSAY USING ENCODED SOLID SUPPORT MATRICES**

DECISION ON PETITION TO MAKE SPECIAL FOR NEW APPLICATION UNDER 37 C.F.R. § 1.102 & M.P.E.P. § 708.02

This is a decision on the petition filed on May 2, 2011 to make the above-identified application special for accelerated examination procedure under 37 C.F.R. § 1.102(d).

The petition to make the application special is **DENIED**.

REGULATION AND PRACTICE

To be eligible for accelerated examination under 37 C.F.R. § 1.102(d) and pursuant to the "Change to Practice for Petitions in Patent Applications to Make Special and for Accelerated Examination" published in the Federal Register on June 26, 2006 (71 Fed. Reg. 36323), the following conditions must be satisfied:

1. The application must be a non-reissue utility or design application filed under 37 CFR 1.111(a);
2. The application, the petition and the required fees must be filed electronically using the USPTO's electronic filing system (EFS), or EFS-web; if not filed electronically, a statement asserting that EFS and EFS-web were not available during the normal business hours;
3. The application, at the time of filing, must be complete under 37 CFR 1.51 and in condition for examination;

Conditions for Examination: The application must be in condition for examination at the time of filing. This means the application must include the following:

(A) Basic filing fee, search fee, and examination fee, under 37 CFR 1.16 (*see* MPEP section 607(I)),

(B) Application size fee under 37 CFR 1.16(s) (if the specification and drawings exceed 100 sheets of paper) (*see* MPEP section 607(II));

(C) An executed oath or declaration in compliance with 37 CFR 1.63;

(D) A specification (in compliance with 37 CFR 1.52) containing a description (37 CFR 1.71) and claims in compliance with 37 CFR 1.75;

(E) A title and an abstract in compliance with 37 CFR 1.72;

(F) Drawings in compliance with 37 CFR 1.84;

(G) Electronic submissions of sequence listings in compliance with 37 CFR 1.821(c) or (e), large tables, or computer listings in compliance with 37 CFR 1.96, submitted via the USPTO's electronic filing system (EFS) in ASCII text as part of an associated file (if applicable);

(H) Foreign priority claim under 35
U.S.C. 119(a)-(d) identified in the executed oath or declaration or an application data sheet (if applicable);

(I) Domestic benefit claims under 35
U.S.C. 119(e), 120, 121, or 365(c) in compliance with 37 CFR 1.78 (*e.g.*, the specific reference to the prior application must be submitted in the first sentence(s) of the specification or in an application data sheet, and for any benefit claim to a non-English language provisional application, the application must include a statement that: (a) An English language translation, and (b) a statement that the translation is accurate, have been filed in the provisional application) (if applicable);

(J) English language translation under 37 CFR 1.52(d), a statement that the translation is accurate, and the processing fee under 37 CFR 1.17(i) (if the specification is in a non-English language);

(K) No preliminary amendments present on the filing date of the application; and

(L) No petition under 37 CFR 1.47 for a non-signing inventor.

4. The application must contain three or fewer independent claims and twenty or fewer total claims and the claims must be directed to a single invention.

The application as filed is not eligible for the accelerated examination under 37 C.F.R. § 1.102(d) because it was no in condition for examination as evidenced by applicants' failure to file this petition in accordance with the rules for accelerated examination and MPEP 708.02 which states "The application, at the time of filing, must be complete under 37 CFR 1.51 and in condition for examination." Specifically, the oath or declaration is missing. A properly signed oath or declaration in compliance with 37 CFR 1.63, identifying the application by the above Application Number and Filing Date, is required. Note: If a petition under 37 CFR 1.47 is being filed, an oath or declaration in compliance with 37 CFR 1.63 signed by all available joint inventors, or if no inventor is available by a party with sufficient proprietary interest, is required. Also, a copy of the "Sequence Listing" in computer readable form has been submitted. However, the content of the computer readable form does not comply with the requirements of 37 CFR 1.822 and/or 1.823, as indicated on the attached copy of the marked -up "Raw Sequence Listing." Applicant must provide a substitute computer readable form (CRF) copy of the "Sequence Listing" and a statement that the content of the sequence listing information recorded in computer readable form is identical to the written (on paper or compact disc) sequence listing and, where applicable, includes no new matter, as required by 37 CFR 1.821 (e), 1.821 (f), 1.821 (g), 1.825(b), or 1.825(d). Refer to attachment or PAIR document dated 05/10/11.

For the above-stated reasons, the petition of May 2, 2011 is **DENIED**.

Any inquiry regarding this decision should be directed to Marianne C. Seidel, Quality Assurance Specialist, at (571) 272-0584.

/MC Seidel/
Marianne. C. Seidel, Quality Assurance Specialist
Technology Center 1600

Doc Code: PET.GREEN
Document Description: Petition for Green Tech Pilot

PTO/SB/420 (11-10)
Approved for use through 01/31/2011. OMB 0651-0062
U.S. Patent and Trademark Office; U. S. DEPARTMENT OF COMMERCE
Under the Paperwork Reduction Act of 1995, no persons are required to respond to a collection of information unless it displays a valid OMB control number.

PETITION TO MAKE SPECIAL UNDER THE GREEN TECHNOLOGY PILOT PROGRAM

Attorney Docket Number: 030348-00188	Application Number (if known): to be determined	Filing date: HEREWITH
First Named Inventor: TAO XU		
Title: METHOD AND SYSTEM FOR DYNAMIC IN-SITU PHOSPHOR MIXING AND JETTING		

APPLICANT HEREBY REQUESTS TO PARTICIPATE IN THE GREEN TECHNOLOGY PILOT PROGRAM FOR THE ABOVE-IDENTIFIED APPLICATION. See Instruction Sheet on page 2.

This petition must be timely filed electronically using the USPTO electronic filing system, EFS-Web.

1. By filing this petition:

   Applicant is requesting early publication: Applicant hereby requests early publication under 37 CFR 1.219 and the publication fee set forth in 37 CFR 1.18(d) accompanies this request.

2. By filing this petition: applicant is agreeing to make an election without traverse in a telephonic interview and elect an invention that meets the eligibility requirements for the Green Technology Pilot Program, if the Office determines that the claims are not obviously directed to a single invention. See Instruction Sheet.

3. This request is accompanied by statements of special status for the eligibility requirement.

4. The application contains no more than three (3) independent claims and twenty (20) total claims.

5. The application does not contain any multiple dependent claims.

6. Other attachments: New Divisional Patent Application, Application Data Sheet, Declaration

Signature Craig Gelfound	Date May 2, 2011
Name (Print/Typed) Craig A. Gelfound	Registration Number 41,032

Note: *Signatures of all the inventors or assignees of record of the entire interest or their representative(s) are required in accordance with 37 CFR 1.33 and 11.18. Please see 37 CFR 1.4(d) for the form of the signature. If necessary, submit multiple forms for more than one signature see below*.*

☒ *Total of 1 forms are submitted.

The information is required to obtain or retain a benefit by the public which is to file (and by the USPTO to process) an application. Confidentiality is governed by 35 U.S.C. 122 and 37 CFR 1.11 and 1.14. This collection is estimated to take 12 hours to complete, including gathering, preparing, and submitting the completed application form to the USPTO. Time will vary depending upon the individual case. Any comments on the amount of time you require to complete this form and/or suggestions for reducing this burden, should be sent to the Chief Information Officer, U.S. Patent and Trademark Office, U.S. Department of Commerce, P.O. Box 1450, Alexandria, VA 22313-1450. DO NOT SEND FEES OR COMPLETED FORMS TO THIS ADDRESS. **SEND TO: Commissioner for Patents, P.O. Box 1450, Alexandria, VA 22313-1450.**

If you need assistance in completing the form, call 1-800-PTO-9199 and select option 2.

PATENT APPLICATION

IN THE UNITED STATES PATENT AND TRADEMARK OFFICE

Docket No. 030348.00188

In re patent application of:

TAO XU, et al.

Confirmation No.: to be determined

Serial No.: to be determined

Art Unit: to be determined

Filed: HEREWITH

Examiner: to be determined

For: METHOD AND SYSTEM FOR DYNAMIC IN-SITU PHOSPHOR MIXING AND JETTING

STATEMENT OF SPECIAL STATUS

Commissioner for Patents
P.O. Box 1450
Alexandria, VA 22313-1450

May 2, 2011

Sir:

Applicant is entitled to special status because the claims are directed to a single invention that materially contributes to the more efficient utilization and conservation of energy resources. In particular, the invention is directed to various light emitting diode (LED) configurations for replacing conventional light sources, such as incandescent lamps. LEDs have substantially higher light conversion efficiencies than incandescent lamps, and therefore, can dramatically reduce energy consumption.

In the event that any fees are due with respect to this paper, please charge Deposit Account No. 01-2300, referencing Atty. Docket No. 030348.00188.

Respectfully submitted,

Craig A. Gelfound
Registration No. 41,032

Customer No.: 68543
ARENT FOX LLP
555 West Fifth Street
48th Floor
Los Angeles, California 90013
Tel: (213) 629-7400
Fax: (213) 629-7401

CAG/cah

UNITED STATES PATENT AND TRADEMARK OFFICE

UNITED STATES DEPARTMENT OF COMMERCE
United States Patent and Trademark Office
Address: COMMISSIONER FOR PATENTS
P.O. Box 1450
Alexandria, Virginia 22313-1450
www.uspto.gov

APPLICATION NO.	FILING DATE	FIRST NAMED INVENTOR	ATTORNEY DOCKET NO.	CONFIRMATION NO.
13/099,244	05/02/2011	Tao Xu	030348.00188	1383

68543 7590 05/26/2011

Arent Fox LLP
555 West Fifth Street
48th Floor
Los Angeles, CA 90013

EXAMINER	
ART UNIT	PAPER NUMBER
1715	

NOTIFICATION DATE	DELIVERY MODE
05/26/2011	ELECTRONIC

Please find below and/or attached an Office communication concerning this application or proceeding.

The time period for reply, if any, is set in the attached communication.

Notice of the Office communication was sent electronically on above-indicated "Notification Date" to the following e-mail address(es):

LAIPDocket@arentfox.com
Patent_Mail@arentfox.com

UNITED STATES PATENT AND TRADEMARK OFFICE

Commissioner for Patents
United States Patent and Trademark Office
P.O. Box 1450
Alexandria, VA 22313-1450
www.uspto.gov

Arent Fox LLP
555 West Fifth Street
48th Floor
Los Angeles CA 90013

MAY 26 2011

In re Application of :
Xu et al. : DECISION ON PETITION
Application No. 13/099,244 : TO MAKE SPECIAL UNDER
Filed: 5/2/2011 : THE GREEN TECHNOLOGY
Attorney Docket No. **030348.00188** : PILOT PROGRAM

This is a decision on the petition under 37 CFR 1.102, filed 5/2/2011, to make the above-identified application special under the pilot program for applications pertaining to Green Technologies as set forth in 74 Federal Register Notice 64666 (December 8, 2009) and amended by 75 Federal Register Notice 28554 (May 21, 2010) and 75 Federal Register Notice 69049 (November 10, 2010).

The petition is **GRANTED**.

A grantable petition to make an application special under 37 CFR 1.102 and the pilot program as set forth in 74 FR 64666 must be directed to a nonprovisional application filed under 35 USC 111(a) or be a national stage entry under 35 USC 371, exclusive of any reissue applications.

In order to qualify for special status, the following requirements must be met. 1) The application must have no more than 3 independent claims and no more than 20 total claims. 2) The application must not contain any multiple dependent claims. 3) The petition must state the basis for seeking special status, i.e., the claimed invention either: A) materially enhances the quality of the environment or B) materially contributes to: i) the discovery or development of renewable energy resources, ii) the more efficient utilization and conservation of energy resources, or iii) greenhouse gas emission reduction. 4) If the disclosure is not clear on its face that the claimed invention materially contributes under category (A) or (B), the petition must be accompanied by a statement by the applicant, assignee, or an attorney/agent registered to practice before the Office explaining how the materiality standard is met. 5) A statement that applicant will agree to make an election without traverse in a telephonic interview if a restriction requirement is made by the examiner. 6) The petition to make special must be filed electronically. 7) The petition must be filed at least one day prior to the date that a first Office Action appears in the Patent Application Information Retrieval (PAIR) system. 8) The petition must be accompanied by a

request for early publication in compliance with 37 CFR 1.219 and include the publication fee as set forth in 37 CFR 1.18(d).

The requirement for a fee for consideration of the petition to make special for applications pertaining to Green Technologies has been waived.

The instant petition complies with items 1 – 8 above. Accordingly, the above-identified application has been accorded "special" status.

Telephone inquires concerning this decision should be directed to Tom Dunn at 571-272-1171.

The application is being forwarded to the Technology Center Art Unit 1715 for action on the merits commensurate with this decision.

/Tom Dunn/

Tom Dunn
Quality Assurance Specialist
Technology Center 1700

Doc Code: PET.AUTO Document Description: Petition automatically granted by EFS-Web	PTO/SB/140 U.S. Patent and Trademark Office Department of Commerce

Electronic Petition Request	**PETITION TO WITHDRAW AN APPLICATION FROM ISSUE AFTER PAYMENT OF THE ISSUE FEE UNDER 37 CFR 1.313(c)**
Application Number	13099273
Filing Date	02-May-2011
First Named Inventor	Tomoyuki KUBO
Art Unit	2883
Examiner Name	GUY ANDERSON
Attorney Docket Number	076376.2029
Title	LIQUID DROPLET JETTING APPARATUS

An application may be withdrawn from issue for further action upon petition by the applicant. To request that the Office withdraw an application from issue, applicant must file a petition under this section including the fee set forth in § 1.17(h) and a showing of good and sufficient reasons why withdrawal of the application from issue is necessary.

APPLICANT HEREBY PETITIONS TO WITHDRAW THIS APPLICATION FROM ISSUE UNDER 37 CFR 1.313(c).

A grantable petition requires the following items:
(1) Petition fee; and
(2) One of the following reasons:
(a) Unpatentability of one or more claims, which must be accompanied by an unequivocal statement that one or more claims are unpatentable, an amendment to such claim or claims, and an explanation as to how the amendment causes such claim or claims to be patentable;
(b) Consideration of a request for continued examination in compliance with § 1.114 (for a utility or plant application only); or
(c) Express abandonment of the application. Such express abandonment may be in favor of a continuing application, but not a CPA under 37 CFR 1.53(d).

Petition Fee

☐ Applicant claims SMALL ENTITY status. See 37 CFR 1.27.

☐ Applicant is no longer claiming SMALL ENTITY status. See 37 CFR 1.27(g)(2).

☐ Applicant(s) status remains as SMALL ENTITY.

☒ Applicant(s) status remains as other than SMALL ENTITY

Reason for withdrawal from issue

◯ One or more claims are unpatentable ◉ Consideration of a request for continued examination (RCE) (List of Required Documents and Fees) ◯ Applicant hereby expressly abandons the instant application (any attorney/agent signing for this reason must have power of attorney pursuant to 37 CFR 1.32(b)).
RCE request,submission, and fee. ☐ I certify, in accordance with 37 CFR 1.4(d)(4) that : The RCE request ,submission, and fee have already been filed in the above-identified application on ☒ Are attached.
THIS PORTION MUST BE COMPLETED BY THE SIGNATORY OR SIGNATORIES I certify, in accordance with 37 CFR 1.4(d)(4) that I am: ◉ An attorney or agent registered to practice before the Patent and Trademark Office who has been given power of attorney in this application. ◯ An attorney or agent registered to practice before the Patent and Trademark Office, acting in a representative capacity. ◯ A sole inventor ◯ A joint inventor; I certify that I am authorized to sign this submission on behalf of all of the inventors ◯ A joint inventor; all of whom are signing this e-petition ◯ The assignee of record of the entire interest that has properly made itself of record pursuant to 37 CFR 3.71

Signature	/Hung-Wei Tsai/
Name	Hung-Wei Tsai
Registration Number	62601

UNITED STATES PATENT AND TRADEMARK OFFICE

Commissioner for Patents
United States Patent and Trademark Office
P.O. Box 1450
Alexandria, VA 22313-1450
www.uspto.gov

Decision Date : January 27, 2012

In re Application of :

Tomoyuki KUBO

DECISION ON PETITION

UNDER CFR 1.313(c)(2)

Application No : 13099273

Filed : 02-May-2011

Attorney Docket No : 076376.2029

This is an electronic decision on the petition under 37 CFR 1.313(c)(2), filed January 27, 2012 , to withdraw the above-identified application from issue after payment of the issue fee.

The petition is **GRANTED.**

The above-identified application is withdrawn from issue for consideration of a submission under 37 CFR 1.114 (request for continued examination). See 37 CFR 1.313(c)(2).

Petitioner is advised that the issue fee paid in this application cannot be refunded. If, however, this application is again allowed, petitioner may request that it be applied towards the issue fee required by the new Notice of Allowance.

Telephone inquiries concerning this decision should be directed to the Patent Electronic Business Center (EBC) at 866-217-9197.

This application file is being referred to Technology Center AU 2883 for processing of the request for continuing examination under 37 CFR 1.114 .

Office of Petitions

UNITED STATES PATENT AND TRADEMARK OFFICE

Commissioner for Patents
United States Patent and Trademark Office
P.O. Box 1450
Alexandria, VA 22313-1450
www.uspto.gov

MAIL

JUN 08 2011

DIRECTOR'S OFFICE
TECHNOLOGY CENTER 2600

Robert M. Green
6901 E Chauncey Lane
1023
Phoenix AZ 85054

In re Application of:
GREEN, ROBERT M.
Serial No.: 13/099,309
Filed: May 2, 2011

Title: **ORGANIZED RETAIL CRIME DETECTION SECURITY SYSTEM AND METHOD**

DECISION ON PETITION TO MAKE SPECIAL FOR NEW APPLICATION UNDER 37 C.F.R. § 1.102 & M.P.E.P. § 708.02

This is a decision on the petition filed on May 2, 2011, to make the above-identified application special for accelerated examination procedure under 37 C.F.R. § 1.102(d).

The petition to make the application special is **DISMISSED**.

REGULATION AND PRACTICE

A grantable petition to make special under 37 C.F.R. § 1.102(d) and pursuant to the "Change to Practice for Petitions in Patent Applications to Make Special and for Accelerated Examination" published in the Federal Register on June 26, 2006 (71 Fed. Reg. 36323), must satisfy the following conditions:

I. Conditions Regarding the Application:

1. the application must be a non-reissue utility or design application filed under 37 CFR 1.111(a);

2. the application, the petition and the required fees must be filed electronically using the USPTO's electronic filing system (EFS), or EFS-web; if not filed electronically, a statement asserting that EFS and EFS-web were not available during the normal business hours.

3. at the time of filing, the application must be complete under 37 CFR 1.51 and in condition for examination;

4. the application must contain three or fewer independent claims and twenty or fewer total claims and the claims must be directed to a single invention. Multiple dependent claims are not permitted.

II. Conditions Regarding the Petition:

The petition must:

1. be filed with the application;

2. include a statement that applicant agrees not to separately argue the patentability of any independent claim during any appeal in the application;

3. include a statement that applicant agrees to make an election without traverse in a telephone interview.

4. include a statement that applicant agrees to conduct such an interview when requested by the examiner.

5. include a statement, made based on a good faith belief, that a preexamination search in compliance with the following requirements, was conducted, including an identification of the filed of search by United States class and subclass, where applicable, and for database searches, the search logic or chemical structure or sequence used as a query, the name of the file(s) searched and the database service, and the date of the search.

The preexamination search must:

5.1 involve U.S. patents and patent application publications, foreign patent documents, and non-patent literature, unless the applicant can justify with reasonable certainty that no references more pertinent than those already identified are likely to be found in the eliminated sources and includes such a justification with this statement;

5.2. be directed to the claimed invention and encompass all of the features of the claims, giving the claims the broadest reasonable interpretation;

5.3. encompass the disclosed features that may be claimed.

6. must provide in support of the petition an accelerated examination support document. An accelerated examination support document must include:

6.1. an information disclosure statement (IDS) in compliance with 37 CFR 1.98 citing each reference deemed most closely related to the subject matter of each of the claims;

6.2. an identification of all the limitations in the claims that are disclosed by the reference specifying where the limitation is disclosed in the cited reference;

6.3. a detailed explanation of how each of the claims are patentable over the references cited with particularity required by 37 CFR 1.111(b) and (c);

6.4. a concise statement of the utility of the invention as defined in each of the independent claims (unless the application is a design application);

6.5. a showing of where each limitation of the claims finds support under 35 USC 112, first paragraph, in the written description of the specification. If applicable, the showing must also identify: (1) each means- (or step) plus-function claim element that invokes consideration under 35 USC 112, sixth paragraph; and (2) the structure, material, or acts in the specification that corresponds to each means- (or step) plus-function claim element that invokes consideration under 35 USC 112, sixth paragraph; if the application claims the benefit of one or more applications under title 35, United States Code, the showing must also include where each limitation of the claims finds support under 35 USC 112, first paragraph, in each such application in which such supports exists;

6.6. an identification of any cited references that may be disqualified under 35 USC 103(c).

REVIEW OF FACTS

The petition fails to comply with the conditions set forth under section II items 5.2, 5.3 and 6.5.

For the reason cited above, the petition fails to meet the required conditions to be accorded special status under the accelerated examination procedure.

Regarding the requirements in section II items 5.2 and 5.3 above, additional search is required in class 455/404.1 and 340/572.1-572.9. If applicable prior art is discovered in this new search, a revised support document must be provided meeting the requirements of section II, items 6.1-6.3 above. Regarding the requirement in section II item 6.5 above, a showing of where each claimed limitation finds support under 35 USC 112, first paragraph, in the written description.

DECISION

For the above-stated reasons, the petition is **dismissed**. The application will therefore be taken up by the examiner for action in its regular turn.

Petitioner is given a single opportunity to perfect the petition. Any request for reconsideration of this decision must be submitted within 1 (one) month or 30 (thirty) days, whichever is longer, (no extension of time under 37 CFR 1.136(a)) from the date of this decision in order to be considered timely. Any request for reconsideration must address the deficiencies indicated above.

Petitioner is reminded that, upon granting of the special status of the application on request for reconsideration, the application will be processed expeditiously. However, due to the dismissal of the instant petition, examination may not be completed within twelve months of the filing date of the application.

Any inquiry regarding this decision should be directed to Ken Wieder, Quality Assurance Specialist, at (571) 272-2986.

Kenneth A. Wieder
Quality Assurance Specialist
Technology Center 2600
Communications

UNITED STATES PATENT AND TRADEMARK OFFICE

Commissioner for Patents
United States Patent and Trademark Office
P.O. Box 1450
Alexandria, VA 22313-1450
www.uspto.gov

MAIL

JUL 07 2011

DIRECTOR'S OFFICE
TECHNOLOGY CENTER 2600

Robert M. Green
6901 E Chauncey Lane
1023
Phoenix AZ 85054

In re Application of:
GREEN, ROBERT M.
Serial No.: 13/099,309
Filed: May 2, 2011

Title: **ORGANIZED RETAIL CRIME DETECTION SECURITY SYSTEM AND METHOD**

DECISION ON PETITION TO MAKE SPECIAL FOR NEW APPLICATION UNDER 37 C.F.R. § 1.102 & M.P.E.P. § 708.02

The petition requesting reconsideration to make the application special filed June 13, 2011 is **GRANTED**.

The application is eligible for accelerated examination and the petition complies with the conditions for granting the application special status pursuant to the "Change to Practice for Petitions in Patent Applications to Make Special and for Accelerated Examination" published June 26, 2006, in the Federal Register. (71 Fed. Reg. 36323).

The prosecution of the instant application will be conducted expeditiously according to the following guidelines.

1. The application will be docketed to an examiner and taken up for action within two weeks of the date of this decision.

2. Restriction Practice:
If the examiner determines that the claims are not directed to a single invention, a telephone request to elect one single invention will be made pursuant to MPEP 812.01. As a prerequisite to the grant of this petition, the applicant has agreed to make an oral election, by telephone, without traverse. If the applicant refuses to make an election without traverse, or the examiner cannot reach the applicant after a reasonable effort, the examiner will treat the first claimed invention (invention defined by claim 1) as having being constructively elected without traverse for examination.

3. Office action:
If it is determined that, after appropriate consultation, there is a potential rejection or any other issue to be addressed, the examiner will telephone the applicant and arrange an interview to discuss and resolve the issue. An Office action, other than a Notice of Allowance and Fee(s) Due (Notice of Allowance), will not be issued unless either: 1) an interview was conducted but did not result in agreed to action that places the application in condition for allowance, or, 2) a determination is made that an interview would be unlikely to result in the application being placed in condition for allowance, and 3) an internal conference has been held to review any rejection of any claim.

4. Time for Reply:
An Office action other than a Notice of Allowance or a final Office action will set a shortened statutory period of one month or thirty days, whichever is longer, for reply with no extension of time available under 37 CFR 1.136(a). Failure to timely file a reply within this non-extendible period for reply will result in the abandonment of the application.

5. Reply by Applicant:
A timely reply to an Office action other than the Notice of Allowance must be submitted electronically via EFS or EFS-web and limited to addressing the rejections, objections and requirement made. Any amendment that attempts to: 1) add claims which would result in more than three pending independent claims or more than twenty pending total claims; 2) present claims not encompassed by the pre-examination search or an updated accelerated examination support document; or 3) present claims that are directed a non-elected invention or an invention other than that previously claimed and examined in the application, will be treated as not fully responsive and will not be entered.

   For any amendment to the claims (including any new claim) that is not encompassed by the accelerated examination support document, applicant must provide an updated accelerated examination support document that encompasses the amended or new claims at the time of filing of the amendment.

   To proceed expeditiously with the examination, it is recommended that a reply with amendments made to any claim or with any new claim being added be accompanied by an updated accelerated examination support document or a statement explaining how the amended or new claim is supported by the original accelerated examination support document.

6. Information Disclosure Statement (IDS):
Any IDS filed during prosecution must be submitted electronically via EFS or EFS-web, accompanied by an updated accelerated examination support document, and be in compliance with 37 CFR 1.97 and 1.98.

7. Post-Allowance Processing:

To expedite processing of the allowed application into a patent, the applicant must: 1) pay the required fees within one month of the date of the Notice of Allowance, and 2) not file any post allowance papers not required by the Office. In no event may the issue fee be paid and accepted later than three months from the date of the Notice of Allowance.

8. After-Final and Appeal Procedures:
   To expedite prosecution, after receiving the final Office action, applicant must: 1) promptly file a notice of appeal, an appeal brief and appeal fees; and 2) not request a pre-appeal brief conference.

   Any amendment, affidavit or other evidence filed after final Office action must comply with applicable rules and the requirements outlined in numbered paragraphs 5 and 6 above.

   On appeal, the application will proceed according to normal appeal procedures. After appeal, the application will again be treated special.

9. Proceedings Outside the Normal Examination Process:
   If the application becomes involved in a proceeding that is outside the normal examination process (e.g., a secrecy order, national security review, interference proceeding, petitions under 37 CFR 1.181, 182 or 183), the application will be treated special before and after such proceeding.

10. Final Disposition:
    The twelve month goal of this accelerated examination procedure ends with a final disposition. The mailing of a final Office action, a Notice of Allowance, the filing of a Notice of Appeal, or the filing of a Request for Continued Examination (RCE) is the final disposition.

If, during prosecution, a paper is not filed electronically using EFS-web, a reply is filed but is not fully responsive, the application is involved in an appeal, or a proceeding outside normal examination process, the application will still be examined expeditiously, however, the final disposition may occur more than twelve months from the filing of the application.

Any inquiry regarding this decision should be directed to Ken Wieder, Quality Assurance Specialist, at (571) 272-2986.

/Kenneth A. Wieder/

Kenneth A. Wieder
Quality Assurance Specialist
Technology Center 2600
Communications

Doc Code: PPH.PCT.652
Document Description: Petition to make special under PCT-Patent Pros Hwy

PTO/SB/20PCT-KR (06-10)
Approved for use through 01/31/2012. OMB 0651-0058
U.S. Patent and Trademark Office; U. S. DEPARTMENT OF COMMERCE
Under the Paperwork Reduction Act of 1995, no persons are required to respond to a collection of information unless it displays a valid OMB control number.

REQUEST FOR PARTICIPATION IN THE PATENT COOPERATION TREATY - PATENT PROSECUTION HIGHWAY (PCT-PPH) PILOT PROGRAM BETWEEN THE KOREAN INTELLECTUAL PROPERTY OFFICE (KIPO) AND THE USPTO

Application No:	Not Yet Assigned	Filing date:	Herewith
First Named Inventor:	Jerry Glen Sabaldan Elpedes		
Title of the Invention:	OPTICAL SIGHT		

THIS REQUEST FOR PARTICIPATION IN THE PCT-PPH PILOT PROGRAM ALONG WITH THE REQUIRED DOCUMENTS MUST BE SUBMITTED VIA EFS-WEB. INFORMATION REGARDING EFS-WEB IS AVAILABLE AT HTTP://WWW.USPTO.GOV/EBC/EFS_HELP.HTML

APPLICANT HEREBY REQUESTS PARTICIPATION IN THE PCT-PPH PROGRAM AND PETITIONS TO MAKE THE ABOVE-IDENTIFIED APPLICATION SPECIAL UNDER THE PCT-PPH PROGRAM.

The above-identified application is (1) a national stage entry of the corresponding PCT application, or (2) a national stage entry of another PCT application which claims priority to the corresponding PCT application, or (3) a national application that claims domestic/ foreign priority to the corresponding PCT application, or (4) a national application which forms the basis for the priority claim in the corresponding PCT application, or (5) a continuing application of a U.S. application that satisfies one of (1) to (4) above, or (6) a U.S. application that claims domestic benefit to a U.S. provisional application which forms the basis for the priority claim in the corresponding PCT application.

The corresponding PCT application number(s) is/are: PCT/US2009/059185

The international date of the corresponding PCT application(s) is/are: October 1, 2009

I. List of Required Documents:

a. **A copy of the latest international work product (WO/ISA, WO/IPEA, or IPER) in the above–identified corresponding PCT application(s)**

☒ Is attached.

☐ Is not attached because the document is already in the U.S. application.

b. **A copy of all claims which were indicated as having novelty, inventive step and industrial applicability in the above-identified corresponding PCT application(s).**

☒ Is attached.

☐ Is not attached because the document is already in the U.S. application.

c. **English translations of the documents in a. and b. above are attached (if the documents are not in the English language). A statement that the English translation is accurate is attached for the document in b. above.**

This collection of information is required by 35 U.S.C. 119, 37 CFR 1.55, and 37 CFR 1.102(d). The information is required to obtain or retain a benefit by the public, which is to file (and by the USPTO to process) an application. Confidentiality is governed by 35 U.S.C. 122 and 37 CFR 1.11 and 1.14. This collection is estimated to take 2 hours to complete, including gathering, preparing, and submitting the completed application form to the USPTO. Time will vary depending upon the individual case. Any comments on the amount of time you require to complete this form and/or suggestions for reducing this burden should be sent to the Chief Information Officer, U.S. Patent and Trademark Office, U.S. Department of Commerce, P.O. Box 1450, Alexandria, VA 22313-1450. DO NOT SEND FEES OR COMPLETED FORMS TO THIS ADDRESS.

Approved for use through 01/31/2012. OMB 0651-0058
U.S.Patent and Trademark Office; U.S. DEPARTMENT OF COMMERCE
Under the Paperwork Reduction Act of 1995, no persons are required to respond to a collection of information unless it displays a valid OMB control number.

REQUEST FOR PARTICIPATION IN THE PCT-PPH PILOT PROGRAM BETWEEN THE KIPO AND THE USPTO

(continued)

Application No.:	Not Yet Assigned
First Named Inventor:	Jerry Glen Sabaldan Elpedes

d. **(1) An information disclosure statement listing the documents cited in the international work products (ISR, WO/ISA, WO/IPEA, IPER) of the corresponding PCT application.**

☒ Is attached

☐ Has already been filed in the above-identified U.S. application on _____

(2) Copies of all documents (except) for U.S. patents or U.S. patent application publications)

☒ Are attached.

Have already been filed in the above-identified U.S. application on _____

II. Claims Correspondence Table:

Claims in US Application	Patentable Claims in the corresponding PCT Application	Explanation regarding the correspondence
1	17 + 21	Claim 1 is a combination of claim 17 and allowed Claim 21
2-27	18-20, 22-44	Claims 2-22 are identical to Claims 18-20 and 22-44
		of the PCT Application but for dependency

III. All the claims in the US application sufficiently correspond to the patentable claims in the corresponding PCT application.

Signature /Bryant E. Wade/	Date May 3, 2011
Name (Print/Typed) Bryant E. Wade	Registration Number 40,344

Privacy Act Statement

The **Privacy Act of 1974 (P.L. 93-579)** requires that you be given certain information in connection with your submission of the attached form related to a patent application or patent. Accordingly, pursuant to the requirements of the Act, please be advised that: (1) the general authority for the collection of this information is 35 U.S.C. 2(b)(2); (2) furnishing of the information solicited is voluntary; and (3) the principal purpose for which the information is used by the U.S. Patent and Trademark Office is to process and/or examine your submission related to a patent application or patent. If you do not furnish the requested information, the U.S. Patent and Trademark Office may not be able to process and/or examine your submission, which may result in termination of proceedings or abandonment of the application or expiration of the patent.

The information provided by you in this form will be subject to the following routine uses:

1. The information on this form will be treated confidentially to the extent allowed under the Freedom of Information Act (5 U.S.C. 552) and the Privacy Act (5 U.S.C 552a). Records from this system of records may be disclosed to the Department of Justice to determine whether disclosure of these records is required by the Freedom of Information Act.
2. A record from this system of records may be disclosed, as a routine use, in the course of presenting evidence to a court, magistrate, or administrative tribunal, including disclosures to opposing counsel in the course of settlement negotiations.
3. A record in this system of records may be disclosed, as a routine use, to a Member of Congress submitting a request involving an individual, to whom the record pertains, when the individual has requested assistance from the Member with respect to the subject matter of the record.
4. A record in this system of records may be disclosed, as a routine use, to a contractor of the Agency having need for the information in order to perform a contract. Recipients of information shall be required to comply with the requirements of the Privacy Act of 1974, as amended, pursuant to 5 U.S.C. 552a(m).
5. A record related to an International Application filed under the Patent Cooperation Treaty in this system of records may be disclosed, as a routine use, to the International Bureau of the World Intellectual Property Organization, pursuant to the Patent Cooperation Treaty.
6. A record in this system of records may be disclosed, as a routine use, to another federal agency for purposes of National Security review (35 U.S.C. 181) and for review pursuant to the Atomic Energy Act (42 U.S.C. 218(c)).
7. A record from this system of records may be disclosed, as a routine use, to the Administrator, General Services, or his/her designee, during an inspection of records conducted by GSA as part of that agency's responsibility to recommend improvements in records management practices and programs, under authority of 44 U.S.C. 2904 and 2906. Such disclosure shall be made in accordance with the GSA regulations governing inspection of records for this purpose, and any other relevant (*i.e.*, GSA or Commerce) directive. Such disclosure shall not be used to make determinations about individuals.
8. A record from this system of records may be disclosed, as a routine use, to the public after either publication of the application pursuant to 35 U.S.C. 122(b) or issuance of a patent pursuant to 35 U.S.C. 151. Further, a record may be disclosed, subject to the limitations of 37 CFR 1.14, as a routine use, to the public if the record was filed in an application which became abandoned or in which the proceedings were terminated and which application is referenced by either a published application, an application open to public inspection or an issued patent.
9. A record from this system of records may be disclosed, as a routine use, to a Federal, State, or local law enforcement agency, if the USPTO becomes aware of a violation or potential violation of law or regulation.

CLAIMS

What is claimed is:

1. An optical sight comprising:

an optical element;

a reticle displayed on said optical element; and

a housing including a base, a first post extending from said base, a second post extending from said base, and a cross member extending between said first post and said second post to define an opening receiving said optical element therein, said first post and said second post extending above said opening and away from said base a greater distance than a top surface of said cross member.

2. The optical sight of Claim 1, wherein said top surface includes a substantially concave shape.

3. The optical sight of Claim 1, wherein said top surface is disposed on an opposite side of said cross member than a bottom surface, said bottom surface having a substantially concave shape and opposing said optical element.

4. The optical sight of Claim 1, wherein said first post is substantially parallel to said second post.

5. The optical sight of Claim 1, wherein said first post and said second post are substantially perpendicular to said base.

6. The optical sight of Claim 1, wherein said reticle is selectively displayed on said optical element.

7. The optical sight of Claim 1, further comprising an illumination system selectively displaying said reticle on said optical element.

8. The optical sight of Claim 7, wherein said illumination system includes at least one of an LED, a fiber optic, and a tritium lamp.

9. The optical sight of Claim 7, further comprising an actuation member operable to permit manual adjustment of a brightness of said illumination system.

10. The optical sight of Claim 9, wherein said actuation member is disposed on a surface of said housing substantially perpendicular to said optical element.

11. The optical sight of Claim 10, wherein said surface is substantially perpendicular to said base.

12. The optical sight of Claim 1, wherein said optical element includes a spherical lens.

13. The optical sight of Claim 12, wherein said optical element is a doublet lens.

14. The optical sight of Claim 1, further comprising an adjustment mechanism operable to adjust a position of said reticle on said optical element.

15. The optical sight of Claim 1, wherein said housing includes at least one drain hole formed through said base.

16. The optical sight of Claim 1, further comprising a mount supporting said housing relative to firearm, said mount including two or fewer posts engaging said housing to position said housing relative to said mount.

17. An optical sight comprising:
an optical element;
a reticle displayed on said optical element; and

a housing including a base, a first post extending from said base, a second post extending from said base, and a cross member extending between said first post and said second post to define an opening receiving said optical element therein, said cross member including a first surface opposing said optical element and a second surface disposed on an opposite side of said cross member than said first surface, said second surface including a substantially concave shape.

18. The optical sight of Claim 17, wherein said first surface includes a substantially concave shape.

19. The optical sight of Claim 17, wherein said first post is substantially parallel to said second post.

20. The optical sight of Claim 17, wherein said first post and said second post are substantially perpendicular to said base.

21. The optical sight of Claim 17, wherein said reticle is selectively displayed on said optical element.

22. The optical sight of Claim 17, further comprising an illumination system selectively displaying said reticle on said optical element.

23. The optical sight of Claim 22, wherein said illumination system includes at least one of an LED, a fiber optic, and a tritium lamp.

24. The optical sight of Claim 22, further comprising an actuation member operable to permit manual adjustment of a brightness of said illumination system.

25. The optical sight of Claim 24, wherein said actuation member is disposed on a surface of said housing substantially perpendicular to said optical element.

26. The optical sight of Claim 25, wherein said surface is substantially perpendicular to said base.

27. The optical sight of Claim 17, wherein said optical element includes a spherical lens.

28. The optical sight of Claim 27, wherein said optical element is a doublet lens.

29. The optical sight of Claim 17, further comprising an adjustment mechanism operable to adjust a position of said reticle on said optical element.

30. The optical sight of Claim 17, wherein said housing includes at least one drain hole formed through said base.

31. The optical sight of Claim 17, further comprising a mount supporting said housing relative to firearm, said mount including two or fewer posts engaging said housing to position said housing relative to said mount.

32. An optical sight comprising:

an optical element;

a reticle displayed on said optical element; and

a housing including a base and an upwardly extending portion extending from said base, said upwardly extending portion including an opening receiving said optical element therein and a top portion extending over said optical element and including a first surface opposing said optical element and a second surface formed on an opposite side of said top portion than said first surface and having a substantially concave shape.

33. The optical sight of Claim 32, wherein said first surface includes a substantially concave shape.

34. The optical sight of Claim 32, wherein said reticle is selectively displayed on said optical element.

35. The optical sight of Claim 32, further comprising an illumination system selectively displaying said reticle on said optical element.

36. The optical sight of Claim 35, wherein said illumination system includes at least one of an LED, a fiber optic, and a tritium lamp.

37. The optical sight of Claim 35, further comprising an actuation member operable to permit manual adjustment of a brightness of said illumination system.

38. The optical sight of Claim 37, wherein said actuation member is disposed on a surface of said housing substantially perpendicular to said optical element.

39. The optical sight of Claim 38, wherein said surface is substantially perpendicular to said base.

40. The optical sight of Claim 32, wherein said optical element includes a spherical lens.

41. The optical sight of Claim 40, wherein said optical element is a doublet lens.

42. The optical sight of Claim 32, further comprising an adjustment mechanism operable to adjust a position of said reticle on said optical element.

43. The optical sight of Claim 32, wherein said housing includes at least one drain hole formed through said base.

44. The optical sight of Claim 32, further comprising a mount supporting said housing relative to firearm, said mount including two or fewer posts engaging said housing to position said housing relative to said mount.

45. An optical sight comprising:

a housing;

an optical element supported by said housing and including a spherical lens having a focal length less than two (2) inches; and

a reticle displayed on said optical element.

46. The optical sight of Claim 45, wherein said housing includes a base and an upwardly extending portion, said upwardly extending portion being substantially perpendicular to said base and supporting said optical element.

47. The optical sight of Claim 45, further comprising an illumination system selectively displaying said reticle on said optical element.

48. The optical sight of Claim 47, wherein said illumination system includes at least one of an LED, a fiber optic, and a tritium lamp.

49. The optical sight of Claim 47, further comprising an actuation member operable to permit manual adjustment of a brightness of said illumination system.

50. The optical sight of Claim 49, wherein said actuation member is disposed on a surface of said housing substantially perpendicular to said optical element.

51. The optical sight of Claim 50, wherein said surface is substantially perpendicular to said base.

52. The optical sight of Claim 45, wherein said optical element is a doublet lens.

53. The optical sight of Claim 45, further comprising an adjustment mechanism operable to adjust a position of said reticle on said optical element.

54. The optical sight of Claim 45, wherein said housing includes at least one drain hole formed through said base.

55. The optical sight of Claim 45, further comprising a mount supporting said housing relative to firearm, said mount including two or fewer posts engaging said housing to position said housing relative to said mount.

56. An optical sight comprising:

a housing;

an optical element supported by said housing;

a reticle; and

an illumination system selectively displaying said reticle on said optical element and including a switch supplying said optical element with light from one of a first light source and a second light source to generate said reticle.

57. The optical sight of Claim 56, wherein said switch includes a first input member associated with said first light source, a second input member associated with said second light source, and an output member supplying light from one of said first light source and said second light source to generate said reticle.

58. The optical sight of Claim 57, wherein said switch includes a movable body movable between said first input member and said second input member to place one of said first input member and said second input member in communication with said output member.

59. The optical sight of Claim 58, wherein said output member is movable with said movable body relative to said first input member and said second input member.

60. The optical sight of Claim 58, wherein said output member extends through said movable body.

61. The optical sight of Claim 57, wherein at least one of said first input member, said second input member, and said output member are an optical fiber.

62. The optical sight of Claim 56, wherein said first light source is one of an LED and an optical fiber and said second light source is the other of said LED and said optical fiber.

63. The optical sight of Claim 62, further comprising a tritium lamp in communication with said optical fiber.

64. The optical sight of Claim 56, further comprising a third light source, said switch supplying said optical element with light from one of said first light source, said second light source, or said third light source to generate said reticle.

65. The optical sight of Claim 56, wherein at least one of said first light source and said second light source includes multiple light sources.

66. The optical sight of Claim 65, wherein said multiple light sources include at least one of a fiber optic, an LED, or a tritium lamp.

67. The optical sight of Claim 56, wherein said first light source is at least one of a fiber optic, an LED, and a tritium lamp and said second light source is at least one of a fiber optic, an LED, and a tritium lamp.

68. An optical sight comprising:

a housing;

an optical element supported by said housing;

a reticle; and

an illumination system selectively displaying said reticle on said optical element and including a beam splitter combining light from a first light source and a second light source to generate said reticle, said beam splitter including a mask formed on a surface of said beam splitter and defining a shape of said reticle.

69. The optical sight of Claim 68, wherein said beam splitter includes a pair of right-angled prisms.

70. The optical sight of Claim 69, wherein said mask is applied to at surface of one of said right-angled prisms at a joint between said pair of right-angled prisms.

71. The optical sight of Claim 69, wherein said mask is applied to a surface of at least one of said right-angled prisms, said surface being spaced apart from a joint between said pair of right-angled prisms.

72. The optical sight of Claim 69, wherein said mask is applied to a first surface of one of said pair of right-angled prisms and is applied to a second surface of the other of said pair of right-angled prisms.

73. The optical sight of Claim 72, wherein said first surface is positioned approximately ninety (90) degrees from said second surface.

74. The optical sight of Claim 68, wherein said first light source includes at least one of an LED, an optical fiber, and a tritium lamp and said second light source includes at least one of an LED, an optical fiber, and a tritium lamp.

75. The optical sight of Claim 74, wherein said beam splitter joins approximately thirty (30) percent of light from one of said LED and said optical fiber and approximately seventy (70) percent of light from the other of said LED and said optical fiber to generate said reticle on said optical element.

76. An optical sight comprising:

a housing;

an optical element supported by said housing;

a reticle; and

an illumination system including a light source for selectively displaying said reticle on said optical element and a photo detector operable to detect ambient light conditions, said photo detector exposed to ambient light conditions via said optical element.

77. The optical sight of Claim 76, wherein said photo detector is disposed adjacent to said optical element.

78. The optical sight of Claim 76, wherein said photo detector is disposed between said housing and said optical element.

79. The optical sight of Claim 76, wherein said light source is an LED.

80. The optical sight of Claim 76, wherein said illumination system includes a controller operable to adjust an intensity of said light source in response to information received from said photo detector.

PATENT COOPERATION TREATY

PCT

INTERNATIONAL SEARCH REPORT

(PCT Article 18 and Rules 43 and 44)

Applicant's or agent's file reference	FOR FURTHER ACTION	see Form PCT/ISA/220 as well as, where applicable, item 5 below.
3801-027-POA		
International application No.	International filing date *(day/month/year)*	(Earliest) Priority Date *(day/month/year)*
PCT/US2009/059185	01 OCTOBER 2009 (01.10.2009)	02 OCTOBER 2008 (02.10.2008)
Applicant		
TRIJICON, INC. et al		

This International search report has been prepared by this International Searching Authority and is transmitted to the applicant according to Article 18. A copy is being transmitted to the International Bureau.

This international search report consists of a total of 3 sheets.

☐ It is also accompanied by a copy of each prior art document cited in this report.

1. **Basis of the report**
   a. With regard to the **language**, the international search was carried out on the basis of :
      ☒ the international application in the language in which it was filed
      ☐ a translation of the international application into _____, which is the language of a translation furnished for the purposes of international search (Rules 12.3(a) and 23.1(b))
   b. ☐ This international search report has been established taking into account the **rectification of an obvious mistake** authorized by or notified to this Authority under Rule 91 (Rule 43.6*bis*(a)).
   c. ☐ With regard to any **nucleotide and/or amino acid sequence** disclosed in the international application, see Box No. I.
2. ☐ **Certain claims were found unsearchable** (See Box No. II)
3. ☐ **Unity of invention is lacking** (See Box No. III)
4. With regard to the **title,**
   ☒ the text is approved as submitted by the applicant.
   ☐ the text has been established by this Authority to read as follows:
5. With regard to the **abstract,**
   ☒ the text is approved as submitted by the applicant.
   ☐ the text has been established, according to Rule 38.2, by this Authority as it appears in Box No. IV. The applicant may, within one month from the date of mailing of this international search report, submit comments to this Authority.
6. With regard to the drawings,
   a. the figure of the **drawings** to be published with the abstract is Figure No. 5
      ☐ as suggested by the applicant.
      ☒ as selected by this Authority, because the applicant failed to suggest a figure.
      ☐ as selected by this Authority, because this figure better characterizes the invention.
   b. ☐ none of the figure is to be published with the abstract.

INTERNATIONAL S RCH REPORT

Interna l application No.
PCT/US2009/059185

A. CLASSIFICATION OF SUBJECT MATTER

F41G 1/30(2006.01)i, F41G 1/027(2006.01)i, F41G 1/033(2006.01)i, F41G 1/32(2006.01)i

According to International Patent Classification (IPC) or to both national classification and IPC

B. FIELDS SEARCHED

Minimum documentation searched (classification system followed by classification symbols)

F41G 1/30; A63F 9/02; F41A 9/62; F41G 1/00; F41G 1/04; F41G 1/34; F41G 3/26

Documentation searched other than minimum documentation to the extent that such documents are included in the fields searched

Korean utility models and applications for utility models
Japanese utility models and applications for utility models
(Chinese Patents and application for patent)

Electronic data base consulted during the international search (name of data base and, where practicable, search terms used)

eKOMPASS(KIPO internal) & Keywords: 'optical sight', 'reticle' and 'housing'

C. DOCUMENTS CONSIDERED TO BE RELEVANT

Category*	Citation of document, with indication, where appropriate, of the relevant passages	Relevant to claim No.
Y	US 6327806 B1 (PAIGE; CLIVE RAWLINSON) 11 December 2001 See Column 1, Line 5 - Column 11, Line 29 and Fig. 9.	1-5,12-13,16,17-20 ,27-28,31,45,52,55
Y	US 2008-0163749 A1 (REIMER PAUL KEVIN) 10 July 2008 See abstract and Fig. 1.	1-5,12-13,16,17-20 ,27-28,31,45,52,55
A	US 5653034 A1 (BINDON; GLYN A. J.) 05 August 1997 See Column 1, Line 6 - Column 13, Line 57 and Fig. 2.	1-80
A	JP 05-172495 A (BANDAI CO LTD) 09 July 1993 See abstract and Fig. 4.	1-80

☐ Further documents are listed in the continuation of Box C.

☒ See patent family annex.

* Special categories of cited documents:

"A" document defining the general state of the art which is not considered to be of particular relevance

"E" earlier application or patent but published on or after the international filing date

"L" document which may throw doubts on priority claim(s) or which is cited to establish the publication date of citation or other special reason (as specified)

"O" document referring to an oral disclosure, use, exhibition or other means

"P" document published prior to the international filing date but later than the priority date claimed

"T" later document published after the international filing date or priority date and not in conflict with the application but cited to understand the principle or theory underlying the invention

"X" document of particular relevance; the claimed invention cannot be considered novel or cannot be considered to involve an inventive step when the document is taken alone

"Y" document of particular relevance; the claimed invention cannot be considered to involve an inventive step when the document is combined with one or more other such documents,such combination being obvious to a person skilled in the art

"&" document member of the same patent family

Date of the actual completion of the international search	Date of mailing of the international search report
17 MAY 2010 (17.05.2010)	**19 MAY 2010 (19.05.2010)**

Name and mailing address of the ISA/KR	Authorized officer
Korean Intellectual Property Office Government Complex-Daejeon, 139 Seonsa-ro, Seo-gu, Daejeon 302-701, Republic of Korea Facsimile No. 82-42-472-7140	HAN, JAE SEOB Telephone No. 82-42-481-5439

Form PCT/ISA/210 (second sheet) (July 2009)

INTERNATIONAL SEARCH REPORT
Information on patent family members

International application No.
PCT/US2009/059185

Patent document cited in search report	Publication date	Patent family member(s)	Publication date
US 6327806 B1	11.12.2001	EP 0928434 A2	05.12.2001
		EP 0928434 A2	14.07.1999
		GB 2317711 A	01.04.1998
		GB 2317711 B	04.07.2001
		GB 9620001 D0	13.11.1996
		GB 9720348 D0	26.11.1997
		JP 2001-500990 A	23.01.2001
		JP 2001-500990 T	23.01.2001
		WO 98-13717 A2	02.04.1998
		WO 98-13717A3	28.05.1998
US 2008-0163749 A1	10.07.2008	None	
US 5653034 A1	05.08.1997	EP 0830559 A1	24.04.2002
		EP 0830559 A1	25.03.1998
		EP 0830559 A4	29.07.1998
		EP 0830559 B1	03.03.2004
		WO 96-37750 A1	28.11.1996
JP 05-172495 A	09.07.1993	None	

PATENT COOPERATION TREATY

From the
INTERNATIONAL SEARCHING AUTHORITY

To:
WADE BRYANT E.

HARNESS, DICKEY & PIERCE, P.L.C. P.O. BOX 828
BLOOMFIELD HILLS MI 48303 USA

PCT

WRITTEN OPINION OF THE INTERNATIONAL SEARCHING AUTHORITY

(PCT Rule 43bis.1)

Date of mailing *(day/month/year)*	**19 MAY 2010 (19.05.2010)**
Applicant's or agent's file reference 3801-027-POA	**FOR FURTHER ACTION** See paragraph 2 below

International application No.	International filing date *(day/month/year)*	Priority date *(day/month/year)*
PCT/US2009/059185	**01 OCTOBER 2009 (01.10.2009)**	02 OCTOBER 2008 (02.10.2008)

International Patent Classification (IPC) or both national classification and IPC

F41G 1/30(2006.01)i, F41G 1/027(2006.01)i, F41G 1/033(2006.01)i, F41G 1/32(2006.01)i

Applicant

TRIJICON, INC. et al

1. This opinion contains indications relating to the following items:

- [X] Box No. I Basis of the opinion
- [ ] Box No. II Priority
- [ ] Box No. III Non-establishment of opinion with regard to novelty, inventive step and industrial applicability
- [ ] Box No. IV Lack of unity of invention
- [X] Box No. V Reasoned statement under Rule 43bis.1(a)(i) with regard to novelty, inventive step or industrial applicability; citations and explanations supporting such statement
- [ ] Box No. VI Certain documents cited
- [ ] Box No. VII Certain defects in the international application
- [ ] Box No. VIII Certain observations on the international application

2. **FURTHER ACTION**

If a demand for international preliminary examination is made, this opinion will be considered to be a written opinion of the International Preliminary Examining Authority ("IPEA") except that this does not apply where the applicant chooses an Authority other than this one to be the IPEA and the chosen IPEA has notified the International Bureau under Rule 66.1bis(b) that written opinions of this International Searching Authority will not be so considered.

If this opinion is, as provided above, considered to be a written opinion of the IPEA, the applicant is invited to submit to the IPEA a written reply together, where appropriate, with amendments, before the expiration of 3 months from the date of mailing of Form PCT/ISA/220 or before the expiration of 22 months from the priority date, whichever expires later.
For further options, see Form PCT/ISA/220.

3. For further details, see notes to Form PCT/ISA/220.

Name and mailing address of the ISA/KR	Date of completion of this opinion	Authorized officer
Korean Intellectual Property Office Government Complex-Daejeon, 139 Seonsa-ro, Seo-gu, Daejeon 302 -701, Republic of Korea Facsimile No. 82-42-472-7140	17 MAY 2010 (17.05.2010)	HAN, JAE SEOB Telephone No.82-42-481-5439

WRITTEN OPINION OF THE INTERNATIONAL SEARCHING AUTHORITY

International application No.
PCT/US2009/059185

Box No. I Basis of this opinion

1. With regard to the **language**, this opinion has been established on the basis of:

   ☒ the international application in the language in which it was filed

   ☐ a translation of the international application into _____, which is the language of a translation furnished for the purposes of international search (Rules 12.3(a) and 23.1(b))

2. ☐ This opinion has been established taking into account the **rectification of an obvious mistake** authorized by or notified to this Authority under Rule 91 (Rule 43*bis*.1(a))

3. With regard to any **nucleotide and/or amino acid sequence** disclosed in the international application, this opinion has been established on the basis of:

   a. a sequence listing filed or furnished
      ☐ on paper
      ☐ in electronic form

   b. time of filing or furnishing
      ☐ contained in the international application as filed.
      ☐ filed together with the international application in electronic form.
      ☐ furnished subsequently to this Authority for the purposes of search.

4. ☐ In addition, in the case that more than one version or copy of a sequence listing has been filed or furnished, the required statements that the information in the subsequent or additioanl copies is identical to that in the application as filed or does not go beyond the application as filed, as appropriate, were furnished.

5. Additional comments:

WRITTEN OPINION OF THE INTERNATIONAL SEARCHING AUTHORITY

International application No.
PCT/US2009/059185

Box No. V Reasoned statement under Rule 43bis.1(a)(i) with regard to novelty, inventive step or industrial applicability; citations and explanations supporting such statement

1. Statement

Novelty (N)	Claims	1-80	YES
	Claims	NONE	NO
Inventive step (IS)	Claims	6-11,14-15,21-26,29-30,32-44,46-51,53-54,56-80	YES
	Claims	1-5,12-13,16-20,27-28,31,45,52,55	NO
Industrial applicability (IA)	Claims	1-80	YES
	Claims	NONE	NO

2. Citations and explanations :

Reference is made to the following documents:

D1: US 6327806 B1 (PAIGE; CLIVE RAWLINSON) 11 December 2001
D2: US 2008-0163749 A1 (REIMER PAUL KEVIN) 10 July 2008
D3: US 5653034 A1 (BINDON; GLYN A. J.) 05 August 1997
D4: JP 05-172495 A (BANDAI CO., LTD.) 09 July 1993

1. Novelty and Inventive Step

1.1 claims 1-16

1.1.1 Independent Claim 1

D1, which is considered to be the closest prior art to the subject matter of claim 1, discloses an optical sighting device. Claim 1 differs from D1 in that it comprises a reticle displayed on an optical element and a first post and a second post extending above an opening and sway from a base a greater distance than a top surface of a cross member. However, the reticle of claim 1 is shown in the reticle(36) of D2. and the shape of first post and the second post is merely a variation of the invention disclosed in either document and a person skilled in the art would arrive at the claimed invention by general experimentation alone without exercising any ingenuity. Accordingly, claim 1 would have been obvious over D1 in view of D2. Therefore, the invention claimed in claim 1 lacks an inventive step under PCT Article 33(3)

1.1.2 claims 2-16

The additional feature of claim 2 dependent on claim 1 is merely one of several straightforward possibilities from which the skilled person would select, in accordance with circumstances, without the exercise of inventive skill. Accordingly, claim 2 would have been obvious over D1 in view of D2. Therefore, claim 2 lacks an inventive step under PCT Article 33(3).

The additional feature of claim 3 dependent on claim 1 is shown in the top surface and bottom surface of D1. Claim 3 differs from D1 in that the bottom surface has a substantially concave shape. However, this feature of claim 3 is merely a variation of the invention disclosed in either document and a person skilled in the art would arrive at the claimed invention by general experimentation alone without exercising any ingenuity. Accordingly, claim 3 would have been obvious over D1 in view of D2. Therefore, claim 3 lacks an inventive step under PCT Article 33(3).

The additional features of claims 4-5 dependent on claim 1 are shown in the sides of housing(30) of D1. Accordingly, claims 4-5 would have been obvious over D1 in view of

Continued on Supplemental Box

Supplemental Box

In case the space in any of the preceding boxes is not sufficient.
Continuation of:

Box V

D2. Therefore, claims 4-5 lack an inventive step under PCT Article 33(3).

The additional features of claims 6-11 are not disclosed in the prior art documents D1-D4, nor are they obvious to a person skilled in the art by the documents D1-D4. Accordingly, claims 6-11 are novel and involve an inventive step under PCT Article 33(2) and (3).

The additional features of claims 12-13 dependent on claim 1 are shown in the optical element(1) of D1. Claim 13 differs from D1 in that the optical element is a doublet lens. However, this feature of claim 13 is merely a variation of the invention disclosed in either document and a person skilled in the art would arrive at the claimed invention by general experimentation alone without exercising any ingenuity. Accordingly, claims 12-13 would have been obvious over D1 in view of D2. Therefore, claims 12-13 lack an inventive step under PCT Article 33(3).

The additional features of claims 14-15 are not disclosed in the prior art documents D1-D4, nor is it obvious to a person skilled in the art by the documents D1-D4. Accordingly, claims 14-15 are novel and involve an inventive step under PCT Article 33(2) and (3).

The additional feature of claim 16 dependent on claim 1 is merely one of several straightforward possibilities from which the skilled person would select, in accordance with circumstances, without the exercise of inventive skill. Accordingly, claim 16 would have been obvious over D1 in view of D2. Therefore, claim 16 lacks an inventive step under PCT Article 33(3).

1.2 claims 17-31

1.2.1 Independent Claim 17

D1, which is considered to be the closest prior art to the subject matter of claim 17, discloses an optical sighting device. Claim 17 differs from D1 in that it comprises a reticle displayed on an optical element and second surface has a substantially concave shape. However, the reticle of claim 17 is shown in the reticle(36) of D2, and the shape of second surface is merely a variation of the invention disclosed in either document and a person skilled in the art would arrive at the claimed invention by general experimentation alone without exercising any ingenuity. Accordingly, claim 17 would have been obvious over D1 in view of D2. Therefore, the invention claimed in claim 17 lacks an inventive step under PCT Article 33(3)

1.2.2 claims 18-31

The additional feature of claim 18 dependent on claim 17 is merely one of several straightforward possibilities from which the skilled person would select, in accordance with circumstances, without the exercise of inventive skill. Accordingly, claim 18 would have been obvious over D1 in view of D2. Therefore, claim 18 lacks an inventive step under PCT Article 33(3).

The additional features of claims 19-20 dependent on claim 17 are shown in the sides of housing(30) of D1. Accordingly, claims 19-20 would have been obvious over D1 in view of D2. Therefore, claims 19-20 lack an inventive step under PCT Article 33(3).

The additional features of claims 21-26 are not disclosed in the prior art documents D1-D4, nor are they obvious to a person skilled in the art by the documents D1-D4. Accordingly, claims 21-26 are novel and involve an inventive step under PCT Article 33(2) and (3).

Continued on Supplemental Box

Supplemental Box

In case the space in any of the preceding boxes is not sufficient.
Continuation of:

The additional features of claims 27-28 dependent on claim 17 are shown in the optical element (1) of D1. Claim 28 differs from D1 in that the optical element is a doublet lens. However, this feature of claim 28 is merely a variation of the invention disclosed in either document and a person skilled in the art would arrive at the claimed invention by general experimentation alone without exercising any ingenuity. Accordingly, claims 27-28 would have been obvious over D1 in view of D2. Therefore, claims 27-28 lack an inventive step under PCT Article 33(3).

The additional features of claims 29-30 are not disclosed in the prior art documents D1-D4, nor are they obvious to a person skilled in the art by the documents D1-D4. Accordingly, claims 29-30 are novel and involve an inventive step under PCT Article 33(2) and (3).

The additional feature of claim 31 dependent on claim 17 is merely one of several straightforward possibilities from which the skilled person would select, in accordance with circumstances, without the exercise of inventive skill. Accordingly, claim 31 would have been obvious over D1 in view of D2. Therefore, claim 31 lacks an inventive step under PCT Article 33(3).

1.3 claims 32-44

1.3.1 Independent Claim 32

The optical sight of claim 32 differs from the disclosures of documents D1-D4 in that it comprises a housing including a base and an upwardly extending portion extending from said base, said upwardly extending portion including an opening receiving said optical element therein and a top portion extending over said optical element and including a first surface opposing said optical element and a second surface formed on an opposite side of said top portion than said first surface and having a substantially concave shape. And it is not obvious to a person skilled in the art by the documents D1-D4, taken alone or in combination. Therefore, claim 32 meets the requirements of PCT Article 33(2) and (3) with respect to novelty and inventive step.

1.3.2 claims 33-44
Claims 33-44 are dependant on claim 32 and therefore meet the requirements of PCT Article 33(2) and (3).

1.4 claims 45-55

1.4.1 Independent Claim 45

D1, which is considered to be the closest prior art to the subject matter of claim 45, discloses an optical sighting device. Claim 45 differs from D1 in that a reticle is displayed on said optical element; a spherical lens has a focal length less than two inches. However, the reticle of claim 45 is shown in the reticle(36) of D2. and the focal length of a spherical lens is merely a variation of the invention disclosed in either document and a person skilled in the art would arrive at the claimed invention by general experimentation alone without exercising any ingenuity. Accordingly, claim 45 would have been obvious over D1 in view of D2. Therefore, the invention claimed in claim 45 lacks an inventive step under PCT Article 33(3)

1.4.2 claims 46-55

The additional features of claims 46-51 are not disclosed in the prior art documents D1-D4, nor are they obvious to a person skilled in the art by the documents D1-D4. Accordingly, claims 46-51 are novel and involve an inventive step under PCT Article 33(2) and (3).

Continued on Supplemental Box

Supplemental Box

In case the space in any of the preceding boxes is not sufficient.
Continuation of:

The additional feature of claim 52 dependent on claim 45 is shown in the optical element(1) of D1. Claim 52 differs from D1 in that the optical element is a doublet lens. However, this feature of claim 52 is merely a variation of the invention disclosed in either document and a person skilled in the art would arrive at the claimed invention by general experimentation alone without exercising any ingenuity. Accordingly, claim 52 would have been obvious over D1 in view of D2. Therefore, claim 52 lacks an inventive step under PCT Article 33(3).

The additional features of claims 53-54 are not disclosed in the prior art documents D1-D4, nor are they obvious to a person skilled in the art by the documents D1-D4. Accordingly, claims 53-54 are novel and involve an inventive step under PCT Article 33(2) and (3).

The additional feature of claim 55 dependent on claim 45 is merely one of several straightforward possibilities from which the skilled person would select, in accordance with circumstances, without the exercise of inventive skill. Accordingly, claim 55 would have been obvious over D1 in view of D2. Therefore, claim 55 lacks an inventive step under PCT Article 33(3).

1.5 claims 56-67

1.5.1 Independent Claim 56

The optical sight of claim 56 differs from the disclosures of documents D1-D4 in that it comprises an illumination system selectively displaying said reticle on said optical element and including a switch supplying said optical element with light from one of a first light source and a second light source to generate said reticle. And it is not obvious to a person skilled in the art by the documents, taken alone or in combination. Therefore, claim 56 meets the requirements of PCT Article 33(2) and (3) with respect to novelty and inventive step.

1.5.2 claims 57-67
Claims 57-67 are dependant on claim 56 and therefore meet the requirements of PCT Article 33(2) and (3).

1.6 claims 68-75

1.6.1 Independent Claim 68

The optical sight of claim 68 differs from the disclosures of documents D1-D4 in that it comprises an illumination system selectively displaying said reticle on said optical element and including a beam splitter combining light from a first light source and a second light source to generate said reticle, said beam splitter including a mask formed on a surface of said beam splitter and defining a shape of said reticle. And it is not obvious to a person skilled in the art by the documents, taken alone or in combination. Therefore, claim 68 meets the requirements of PCT Article 33(2) and (3) with respect to novelty and inventive step.

1.6.2 claims 69-75
Claims 69-75 are dependant on claim 68 and therefore meet the requirements of PCT Article 33(2) and (3).

1.7 claims 76-80

Continued on Supplemental Box

Supplemental Box

In case the space in any of the preceding boxes is not sufficient.
Continuation of:

1.7.1 Independent Claim 76

The optical sight of claim 76 differs from the disclosures of documents D1-D4 in that it comprises an illumination system including a light source for selectively displaying said reticle on said optical element and a photo detector operable to detect ambient light conditions, said photo detector exposed to ambient light conditions via said optical element. And it is not obvious to a person skilled in the art by the documents, taken alone or in combination. Therefore, claim 76 meets the requirements of PCT Article 33(2) and (3) with respect to novelty and inventive step.

1.7.2 claims 77-80
Claims 77-80 are dependant on claim 76 and therefore meet the requirements of PCT Article 33(2) and (3).

2. Industrial Applicability

Claims 1-80 are considered to be industrially applicable under PCT Article 33(4).

UNITED STATES PATENT AND TRADEMARK OFFICE

UNITED STATES DEPARTMENT OF COMMERCE
United States Patent and Trademark Office
Address: COMMISSIONER FOR PATENTS
P.O. Box 1450
Alexandria, Virginia 22313-1450
www.uspto.gov

APPLICATION NO.	FILING DATE	FIRST NAMED INVENTOR	ATTORNEY DOCKET NO.	CONFIRMATION NO.
13/099,491	05/03/2011	Jerry Glen Sabaldan Elpedes	3801-000027/US/DVC	1936

27572 7590 06/02/2011

HARNESS, DICKEY & PIERCE, P.L.C.
P.O. BOX 828
BLOOMFIELD HILLS, MI 48303

EXAMINER	
WEBER, JONATHAN C	

ART UNIT	PAPER NUMBER
3641	

MAIL DATE	DELIVERY MODE
06/02/2011	PAPER

Please find below and/or attached an Office communication concerning this application or proceeding.

The time period for reply, if any, is set in the attached communication.

UNITED STATES PATENT AND TRADEMARK OFFICE

- 2 2011

Commissioner for Patents
United States Patent and Trademark Office
P.O. Box 1450
Alexandria, VA 22313-1450
www.uspto.gov

HARNESS, DICKEY & PIERCE, P.L.C.
P.O. BOX 828
BLOOMFIELD HILLS MI 48303

In re application of
Elpedes et al.
Application No. 13/099,491
Filed: May 03, 2011
For: OPTICAL SIGHT

: **DECISION ON REQUEST TO**
: **PARTICIPATE IN PATENT**
: **PROSECUTION HIGHWAY**
: **PROGRAM AND PETITION**
: **TO MAKE SPECIAL UNDER**
: **37 CFR 1.102(a)**

This is a decision on the request to participate in the Patent Prosecution Highway (PPH) program and the petition under 37 CFR 1.102(a), filed May 03, 2011, to make the above-identified application special.

The request and petition are **DISMISSED**.

A grantable request to participate in the PPH pilot program and petition to make special require:

(1) The U.S. application must validly claim priority under 35 U.S.C. 119(a) to one or more applications filed in the KIPO, or USPTO;
(2) Applicant must submit a copy of the allowable/patentable claim(s) from the CIPO application(s) along with an English translation thereof and a statement that the English translation is accurate;
(3) All the claims in the U.S. application must sufficiently correspond or be amended to sufficiently correspond to the allowable/patentable claim(s) in the KIPO application(s);
(4) Examination of the U.S. application has not begun;
(5) Applicant must submit a copy of the latest Office action from each of the KIPO application(s) containing the allowable/patentable claim(s) along with an English translation thereof and a statement that the English translation is accurate;
(6) Applicant must submit an IDS listing the documents cited by the KIPO examiner in the KIPO Office action along with copies of documents except U.S. patents or U.S. patent application publications.

The request to participate in the PPH pilot program and petition fail to include:
(3) All the claims in the U.S. application must sufficiently correspond or be amended to sufficiently correspond to the allowable/patentable claim(s) in the PCT application(s);

US claim 1 as filed only corresponding to claim 17 of the PCT application. US claim 1 not corresponding to claims 17 and claim 21 as recited in the "Claims Correspondence Table". Also, there is no explanation regarding the correspondence of US claims 23 – 27. In the "Explanation regarding the correspondence" applicant's attorney only recited "Claims 2 - 22 are identical to Claims 18 - 20 and 22- 44".

It is also unclear as to which claim is corresponding to independent US claim 15.

It is request that applicant submits a detail explanation of each US claim and the corresponding allowable/patentable claim in the PCT application.

Applicant is given a time period of **ONE MONTH or THIRTY DAYS**, whichever is longer, to correct the deficiencies. **NO EXTENSION OF TIME UNDER 37 CFR 1.136 IS PERMITTED.** If the deficiencies are not corrected with the time period given, the application will await action in its regular turn. All replies to a decision to dismiss must be submitted by EFS-Web using the document description "Petition to make special under Patent Prosecution Highway."

Any inquiry regarding this decision should be directed to Mikado Buiz, Quality Assurance Specialist, at (571) 272-6578.

/ Mikado Buiz /
Mikado Buiz,
Quality Assurance Specialist
Technology Center 3600

MB/MB: 06/01/11

UNITED STATES PATENT AND TRADEMARK OFFICE

UNITED STATES DEPARTMENT OF COMMERCE
United States Patent and Trademark Office
Address: COMMISSIONER FOR PATENTS
P.O. Box 1450
Alexandria, Virginia 22313-1450
www.uspto.gov

APPLICATION NO.	FILING DATE	FIRST NAMED INVENTOR	ATTORNEY DOCKET NO.	CONFIRMATION NO.
13/099,491	05/03/2011	Jerry Glen Sabaldan Elpedes	3801-000027/US/DVC	1936

27572 7590 07/12/2011
HARNESS, DICKEY & PIERCE, P.L.C.
P.O. BOX 828
BLOOMFIELD HILLS, MI 48303

EXAMINER	
WEBER, JONATHAN C	

ART UNIT	PAPER NUMBER
3641	

MAIL DATE	DELIVERY MODE
07/12/2011	PAPER

Please find below and/or attached an Office communication concerning this application or proceeding.

The time period for reply, if any, is set in the attached communication.

UNITED STATES PATENT AND TRADEMARK OFFICE

JUL 12 2011

Commissioner for Patents
United States Patent and Trademark Office
P.O. Box 1450
Alexandria, VA 22313-1450
www.uspto.gov

HARNESS, DICKEY & PIERCE, P.L.C.
P.O. BOX 828
BLOOMFIELD HILLS MI 48303

In re application of
Elpedes et al
Application No. 13/099,491
Filed: May 03, 2011
For: OPTICAL SIGHT

: **DECISION ON REQUEST TO**
: **PARTICIPATE IN PATENT**
: **PROSECUTION HIGHWAY**
: **PROGRAM AND PETITION**
: **TO MAKE SPECIAL UNDER**
: **37 CFR 1.102(a)**

This is a decision on the renewed request to participate in the Patent Prosecution Highway (PPH) program and the petition under 37 CFR 1.102(a), filed June 02, 2011, to make the above-identified application special.

The request and petition are **DENIED**.

A grantable request to participate in the PPH pilot program and petition to make special require:

(1) The U.S. application must validly claim priority under 35 U.S.C. 119(a) to one or more applications filed in the KIPO
(2) Applicant must submit a copy of the allowable/patentable claim(s) from the KIPO, application(s) along with an English translation thereof and a statement that the English translation is accurate;
(3) All the claims in the U.S. application must sufficiently correspond or be amended to sufficiently correspond to the allowable/patentable claim(s) in the KIPO application(s);
(4) Examination of the U.S. application has not begun;
(5) Applicant must submit a copy of the latest Office action from each of the KIPO application(s) containing the allowable/patentable claim(s) along with an English translation thereof and a statement that the English translation is accurate;
(6) Applicant must submit an IDS listing the documents cited by the KIPO examiner in the KIPO Office action along with copies of documents except U.S. patents or U.S. patent application publications.

The request to participate in the PPH pilot is not grantable as per item (4) above in that Examination of the U.S. application has already begun. A non-final Office action was mailed on June 23, 2011.

No time period for reply to this decision is available since an Office action on the merits has already been mailed.

Any inquiry regarding this decision should be directed to Mikado Buiz, Quality Assurance Specialist, at (571) 272-6578.

/ Mikado Buiz /

Mikado Buiz,
Quality Assurance Specialist
Technology Center 3600

MB/MB: 07/11/11

UNITED STATES PATENT AND TRADEMARK OFFICE

UNITED STATES DEPARTMENT OF COMMERCE
United States Patent and Trademark Office
Address: COMMISSIONER FOR PATENTS
P.O. Box 1450
Alexandria, Virginia 22313-1450
www.uspto.gov

APPLICATION NO.	FILING DATE	FIRST NAMED INVENTOR	ATTORNEY DOCKET NO.	CONFIRMATION NO.
13/099,545	05/03/2011	Jong Bum Lee	508601	1043

53609 7590 07/28/2011

REINHART BOERNER VAN DEUREN P.C.
2215 PERRYGREEN WAY
ROCKFORD, IL 61107

EXAMINER	
ART UNIT	PAPER NUMBER
3751	

NOTIFICATION DATE	DELIVERY MODE
07/28/2011	ELECTRONIC

Please find below and/or attached an Office communication concerning this application or proceeding.

The time period for reply, if any, is set in the attached communication.

Notice of the Office communication was sent electronically on above-indicated "Notification Date" to the following e-mail address(es):

RockMail@reinhartlaw.com

UNITED STATES PATENT AND TRADEMARK OFFICE

Commissioner for Patents
United States Patent and Trademark Office
P.O. Box 1450
Alexandria, VA 22313-1450
www.uspto.gov

REINHART BOERNER VAN DEUREN P.C.
2215 PERRYGREEN WAY
ROCKFORD IL 61107

In re Application of:
LEE, JONG BUM , et al
Serial No.: 13/099545
Filed: 05/03/2011
Attorney Docket No. : 508601
Title: TOILET PLUNGER

DECISION ON A REQUEST TO PARTICIPATE IN PATENT PCT/PROSECUTION HIGHWAY PROGRAM AND PETITION TO MAKE SPECIAL UNDER CFR 1.102(a)

This is a decision on the request to participate in the Patent Prosecution Highway (PPH) program and the petition under 37 CFR 1.102(a), filed May 3, 2011 to make the above-identified application special.

The request and petition are **granted**.

A grantable request to participate in the PPH pilot program and petition to make special require:

(1) The U.S. application must validly claim priority under 35 U.S.C. 119(a) to one or more applications filed in the KIPO;
(2) Applicant must submit a copy of the allowable/patentable claim(s) from the KIPO application(s);
(3) All the claims in the U.S. application must sufficiently correspond or be amended to sufficiently correspond to the allowable/patentable claim(s) in the KIPO application(s);
(4) Examination of the U.S. application has not begun;
(5) Applicant must submit a copy of all the office actions from each of the KIPO application(s) containing the allowable/patentable claim(s) along with an English translation thereof and a statement that the English translation is accurate; and
(6) Applicant must submit an IDS listing the documents cited by the KIPO examiner in the KIPO office action along with copies of documents except U.S. patents or U.S. patent application publications.

In light of the petition being properly submitted, the request to participate in the PPH program and the petition comply with the above requirements. Accordingly, the above-identified application has been accorded "special" status.

The applicant is encouraged to cite and submit all relevant prior art references, if any, to facilitate examination in this application.

Response must be filed via EFS-Web. Telephone inquiries concerning this decision should be directed to Henry C. Yuen, at 571-272-4856.

Petition is **granted**.

/Henry C. Yuen/

Henry C. Yuen
Special Programs Examiner
Technology Center 3700
Tel: 571-272-4856

IN THE UNITED STATES PATENT AND TRADEMARK OFFICE

First Named Inventor: Brent Junge	)
Confirmation No.: 1111	)
	)
Serial No.: 13/099575	)
	)
Filing Date: 2011-05-03	)
	)
Atty Docket No.: 248400-1 (US)	)

VIA EFS
Commissioner for Patents
P.O. Box 1450
Alexandria, VA 22313-1450

Statement Concerning the Basis for the Special Status

SIR:

The present application relates generally to refrigeration systems, and more particularly to heat exchangers used in sealed refrigeration systems. The present application provides heat exchangers, such as evaporators and condensers, for a sealed refrigeration system, wherein the heat exchangers have a unique combination of refrigerant side (inner) diameter, tube length, and refrigerant charge mass that provides balanced efficiency between cooling capacity of the system and reduced refrigerant charge. (See [0001], [0007])

Consumer refrigerators generally utilize a relatively simple vapor compression refrigeration cycle that includes a compressor, a condenser, an expansion device, and an evaporator connected in series. The system is charged with a refrigerant such as R-134a. The type and amount of refrigerant are important considerations in the cost, efficiency, and safety aspects of the refrigerators. (See [0002])

Essentially all available refrigerants have environmental and safety concerns. For example, it has been found that CFC and HCFC refrigerants are a significant contributor to depletion of the stratospheric ozone layer. As a result, the use of CFC refrigerants was discontinued in most countries by 1996, and the use of HCFC refrigerants is being curtailed. In addition to the environmental concerns, when a refrigerant containing chlorine or fluorine is burned, poisonous gases are generated and released. (See [0003]-[0004])

R-600a is a known refrigerant that has a dramatically lower Greenhouse Warming Potential (GWP) than R-134a, and has replaced R-134a in much of the world outside of the U.S. R-600a also tends to reduce the energy use of conventional refrigerators by as much as four percent (4%). Unfortunately, the refrigerants with the least environment impact (such as R-600a) also tend to be the most flammable or toxic. Besides R-600a, R-600, R-152a, and HFO-1234ze are alternative refrigerants, but are also flammable. Ammonia has excellent refrigerant characteristics, but is toxic in large charge amounts. Thus, it is desired to minimize the charge requirements of these refrigerants. (See [0005])

Accordingly, it would be desirable to provide a sealed refrigeration system particularly suited for residential consumer refrigerators that reduces the refrigerant charge without a significant impact on cooling capacity or efficiency. (See [0006]).

In this regard, an exemplary embodiment of a consumer refrigeration appliance, for example a refrigerator, includes at least one compartment configured for storage of items to be refrigerated, such as a fresh food or freezer

compartment. A sealed refrigeration system within the appliance is charged with a refrigerant and further includes a compressor, a condenser, an expansion device, and an evaporator. Either or both of the condenser and evaporator may be configured in accordance with aspects of the invention. For example, in a particular embodiment, the evaporator is a spine fin heat exchanger having a defined length (L1) of tube with a spine fin material configured around at least a portion of the tube. The tube may have a refrigerant side diameter (D1) of less than 0.3 inch and a refrigerant side area (A1) determined by (L1) and (D1). The refrigeration system has a refrigerant charge mass such that a ratio (R1) of the charge mass to refrigerant side area (A1) is less than 0.10 and a refrigerant pressure drop across the evaporator is less than 0.7 psi. (See [0009])

.In accordance with certain aspects of the present invention, it has been found that a reduced tube area is advantageous when combined with a carefully selected tube diameter, tube length, and type of refrigerant, resulting in a decreased refrigerant charge and corresponding increase in heat transfer coefficient. Besides the environmental and economic benefit, a reduced refrigerant charge also reduces energy use by limiting transient losses. When the refrigeration system 60 is shut off, a portion of the warm refrigerant migrates from the condenser to the evaporator and carries heat into the cabinet 12. This occurs for approximately three minutes in most residential-sized refrigerators. In addition, at the beginning of a subsequent compressor on cycle, there is a period of time when the system is less efficient because the refrigerant is not optimally

distributed through the circuit. When a smaller refrigerant charge is used, these losses are minimized. (See [0029]-[0031])

Therefore, Applicant respectfully submits that Special Status is sought on the basis that the present invention materially enhances the quality of the environment, contributes to the more efficient utilization and conservation of energy resources, and materially contributes to the reduction of greenhouse gas emissions.

The undersigned representative may be contacted at the number below to facilitate the resolution of any matters. Please charge any fees that are incurred in connection with this Statement to deposit account no. 09-0470.

Respectfully submitted,

General Electric Company

By : /Allison W. Mages/
Allison W. Mages
Reg. No. 57,275

Dated: November 9, 2011

GE Global Patent Operation
2 Corporate Drive, Suite 648
Shelton, CT 06484
203-944-6730

Doc Code: PET.GREEN
Document Description: Petition for Green Tech Pilot

PTO/SB/420 (11-10)
Approved for use through 01/31/2011. OMB 0651-0062
U.S. Patent and Trademark Office; U. S. DEPARTMENT OF COMMERCE
Under the Paperwork Reduction Act of 1995, no persons are required to respond to a collection of information unless it displays a valid OMB control number.

PETITION TO MAKE SPECIAL UNDER THE GREEN TECHNOLOGY PILOT PROGRAM

Attorney Docket Number: 248400	Application Number (if known): 13/099575	Filing date: 2011-05-03
First Named Inventor: Brent Junge		
Title: LOW CHARGE HEAT EXCHANGER IN A SEALED REFRIGERATION SYSTEM		

APPLICANT HEREBY REQUESTS TO PARTICIPATE IN THE GREEN TECHNOLOGY PILOT PROGRAM FOR THE ABOVE-IDENTIFIED APPLICATION. See Instruction Sheet on page 2.

This petition must be timely filed electronically using the USPTO electronic filing system, EFS-Web.

1. By filing this petition:

   Applicant is requesting early publication: Applicant hereby requests early publication under 37 CFR 1.219 and the publication fee set forth in 37 CFR 1.18(d) accompanies this request.

2. By filing this petition: applicant is agreeing to make an election without traverse in a telephonic interview and elect an invention that meets the eligibility requirements for the Green Technology Pilot Program, if the Office determines that the claims are not obviously directed to a single invention. See Instruction Sheet.

3. This request is accompanied by statements of special status for the eligibility requirement.

4. The application contains no more than three (3) independent claims and twenty (20) total claims.

5. The application does not contain any multiple dependent claims.

6. Other attachments: Statement Concerning the Basis for the Special Status

Signature /Allison W. Mages/	Date 2011-11-09
Name (Print/Typed) Allison W .Mages	Registration Number 57,275

Note: *Signatures of all the inventors or assignees of record of the entire interest or their representative(s) are required in accordance with 37 CFR 1.33 and 11.18. Please see 37 CFR 1.4(d) for the form of the signature. If necessary, submit multiple forms for more than one signature see below*.*

☐ *Total of ..... forms are submitted.

The information is required to obtain or retain a benefit by the public which is to file (and by the USPTO to process) an application. Confidentiality is governed by 35 U.S.C. 122 and 37 CFR 1.11 and 1.14. This collection is estimated to take 12 hours to complete, including gathering, preparing, and submitting the completed application form to the USPTO. Time will vary depending upon the individual case. Any comments on the amount of time you require to complete this form and/or suggestions for reducing this burden, should be sent to the Chief Information Officer, U.S. Patent and Trademark Office, U.S. Department of Commerce, P.O. Box 1450, Alexandria, VA 22313-1450. DO NOT SEND FEES OR COMPLETED FORMS TO THIS ADDRESS. **SEND TO: Commissioner for Patents, P.O. Box 1450, Alexandria, VA 22313-1450.**

If you need assistance in completing the form, call 1-800-PTO-9199 and select option 2.

PTO/SB/420 (11-10)
Approved for use through 01/31/2011. OMB 0651-0062
U.S. Patent and Trademark Office; U. S. DEPARTMENT OF COMMERCE
Under the Paperwork Reduction Act of 1995, no persons are required to respond to a collection of information unless it displays a valid OMB control number.

Instruction Sheet for Petition to Make Special Under the Green Technology Pilot Program

(Not to be Submitted to the USPTO)

The following is a summary of the requirements (for more information see the notices (i) "Pilot Program for Green Technologies Including Greenhouse Gas Reduction," (ii) "Elimination of Classification Requirement in the Green Technology Pilot Program," and (iii) "Expansion and Extension of the Green Technology Pilot Program," available on the USPTO web site at http://www.uspto.gov/patents/init_events/green_tech.jsp):

1) The application must be a non-reissue, non-provisional utility application filed under 35 U.S.C. 111 (a), or an international application that has entered the national stage in compliance with 35 U.S.C. 371, irrespective of the filing date of the application. Reexamination proceedings are excluded from this pilot program.

2) The application must contain three or fewer independent claims and twenty or fewer total claims. The application must not contain any multiple dependent claims. For an application that contains more than three independent claims or twenty total claims, or multiple dependent claims, applicant must file a preliminary amendment in compliance with 37 CFR 1.121 to cancel the excess claims and/or the multiple dependent claims at the time the petition to make special is filed.

3) The claims must be directed to a single invention that materially enhances the quality of the environment, or that materially contributes to: (1) the discovery or development of renewable energy resources; (2) the more efficient utilization and conservation of energy resources; or (3) green house gas emission reduction (see the eligibility requirements of sections II and III of the notice (i) cited above). The petition must include a statement that, if the USPTO determines that the claims are directed to multiple inventions (e.g., in a restriction requirement), applicant will agree to make an election without traverse in a telephonic interview, and elect an invention that meets the eligibility requirements in section II or III of the notice (i) cited above.

4) The petition to make special must be timely filed electronically using the USPTO electronic filing system, EFS-Web, and selecting the document description of "Petition for Green Tech Pilot" on the EFS-Web screen. Applicant should use form PTO/SB/420, which is available as a Portable Document Format (PDF) fillable form in EFS-Web and on the USPTO Web site.

5) The petition to make special must be filed at least one day prior to the date that a first Office action (which may be an Office action containing only a restriction requirement) appears in the Patent Application Information Retrieval (PAIR) system. Applicant may check the status of the application using PAIR.

6) The petition to make special must be accompanied by a request for early publication in compliance with 37 CFR 1.219 and the publication fee set forth in 37 CFR 1.18(d).

Privacy Act Statement

The **Privacy Act of 1974 (P.L. 93-579)** requires that you be given certain information in connection with your submission of the attached form related to a patent application or patent. Accordingly, pursuant to the requirements of the Act, please be advised that: (1) the general authority for the collection of this information is 35 U.S.C. 2(b)(2); (2) furnishing of the information solicited is voluntary; and (3) the principal purpose for which the information is used by the U.S. Patent and Trademark Office is to process and/or examine your submission related to a patent application or patent. If you do not furnish the requested information, the U.S. Patent and Trademark Office may not be able to process and/or examine your submission, which may result in termination of proceedings or abandonment of the application or expiration of the patent.

The information provided by you in this form will be subject to the following routine uses:

1. The information on this form will be treated confidentially to the extent allowed under the Freedom of Information Act (5 U.S.C. 552) and the Privacy Act (5 U.S.C 552a). Records from this system of records may be disclosed to the Department of Justice to determine whether disclosure of these records is required by the Freedom of Information Act.
2. A record from this system of records may be disclosed, as a routine use, in the course of presenting evidence to a court, magistrate, or administrative tribunal, including disclosures to opposing counsel in the course of settlement negotiations.
3. A record in this system of records may be disclosed, as a routine use, to a Member of Congress submitting a request involving an individual, to whom the record pertains, when the individual has requested assistance from the Member with respect to the subject matter of the record.
4. A record in this system of records may be disclosed, as a routine use, to a contractor of the Agency having need for the information in order to perform a contract. Recipients of information shall be required to comply with the requirements of the Privacy Act of 1974, as amended, pursuant to 5 U.S.C. 552a(m).
5. A record related to an International Application filed under the Patent Cooperation Treaty in this system of records may be disclosed, as a routine use, to the International Bureau of the World Intellectual Property Organization, pursuant to the Patent Cooperation Treaty.
6. A record in this system of records may be disclosed, as a routine use, to another federal agency for purposes of National Security review (35 U.S.C. 181) and for review pursuant to the Atomic Energy Act (42 U.S.C. 218(c)).
7. A record from this system of records may be disclosed, as a routine use, to the Administrator, General Services, or his/her designee, during an inspection of records conducted by GSA as part of that agency's responsibility to recommend improvements in records management practices and programs, under authority of 44 U.S.C. 2904 and 2906. Such disclosure shall be made in accordance with the GSA regulations governing inspection of records for this purpose, and any other relevant (*i.e.*, GSA or Commerce) directive. Such disclosure shall not be used to make determinations about individuals.
8. A record from this system of records may be disclosed, as a routine use, to the public after either publication of the application pursuant to 35 U.S.C. 122(b) or issuance of a patent pursuant to 35 U.S.C. 151. Further, a record may be disclosed, subject to the limitations of 37 CFR 1.14, as a routine use, to the public if the record was filed in an application which became abandoned or in which the proceedings were terminated and which application is referenced by either a published application, an application open to public inspection or an issued patent.
9. A record from this system of records may be disclosed, as a routine use, to a Federal, State, or local law enforcement agency, if the USPTO becomes aware of a violation or potential violation of law or regulation.

UNITED STATES PATENT AND TRADEMARK OFFICE

UNITED STATES DEPARTMENT OF COMMERCE
United States Patent and Trademark Office
Address: COMMISSIONER FOR PATENTS
P.O. Box 1450
Alexandria, Virginia 22313-1450
www.uspto.gov

APPLICATION NO.	FILING DATE	FIRST NAMED INVENTOR	ATTORNEY DOCKET NO.	CONFIRMATION NO.
13/099,575	05/03/2011	Brent Alden Junge	248400/GECA-108	1111

99491 7590 12/07/2011

Dority and Manning, P.A and General
Electric-Appliance and Lighting
PO Box 1449
greenville, SC 29602

EXAMINER	
ART UNIT	PAPER NUMBER
3744	

MAIL DATE	DELIVERY MODE
12/07/2011	PAPER

Please find below and/or attached an Office communication concerning this application or proceeding.

The time period for reply, if any, is set in the attached communication.

UNITED STATES PATENT AND TRADEMARK OFFICE

Commissioner for Patents
United States Patent and Trademark Office
P.O. Box 1450
Alexandria, VA 22313-1450
www.uspto.gov

Dority and Manning, P.A and General
Electric-Appliance and Lighting
PO Box 1449
Greenville SC 29602

In re Application of
JUNGE, BRENT ALDEN et al
Application No. 13/099,575
Filed: May 3, 2011
Attorney Docket No. 248400/GECA-108

: DECISION ON PETITION
: TO MAKE SPECIAL UNDER
: THE GREEN TECHNOLOGY
: PILOT PROGRAM

This is a decision on the petition under 37 CFR 1.102, filed November 9, 2011, to make the above-identified application special under the pilot program for applications pertaining to Green Technologies as set forth in 74 Federal Register Notice 64666 (December 8, 2009) and amended by 75 Federal Register Notice 28554 (May 21, 2010) and 75 Federal Register Notice 69049 (November 10, 2010).

The petition is **granted**.

A grantable petition to make an application special under 37 CFR 1.102 and the pilot program as set forth in 74 FR 64666 must be directed to a nonprovisional application filed under 35 USC 111(a) or be a national stage entry under 35 USC 371, exclusive of any reissue applications.

If reconsideration of this decision is desired, a petition for reconsideration must be filed within ONE (1) MONTH OR THIRTY (30) DAYS from the mail date of this decision, whichever is longer. No extension of this time limit can be granted under 37 CFR 1.136(a) or (b). The petition for reconsideration should include an exhaustive attempt to provide the lacking item(s) noted below, since, after a decision on the petition for reconsideration, no further reconsideration or review of the matter will be undertaken by the Director.

In order to qualify for special status, the following requirements must be met. 1) The application must have no more than 3 independent claims and no more than 20 total claims. 2) The application must not contain any multiple dependent claims. 3) The petition must state the basis for seeking special status, i.e., the claimed invention either: A) materially enhances the quality of the environment or B) materially contributes to: i) the discovery or development of renewable energy resources, ii) the more efficient utilization and conservation of energy resources, or iii) greenhouse gas emission reduction. 4) If the disclosure is not clear on its face that the claimed invention materially contributes under category (A) or (B), the petition must be accompanied by

a statement by the applicant, assignee, or an attorney/agent registered to practice before the Office explaining how the materiality standard is met. 5) A statement that applicant will agree to make an election without traverse in a telephonic interview if a restriction requirement is made by the examiner. 6) The petition to make special must be filed electronically. 7) The petition must be filed at least one day prior to the date that a first Office Action appears in the Patent Application Information Retrieval (PAIR) system. 8) The petition must be accompanied by a request for early publication in compliance with 37 CFR 1.219 and include the publication fee as set forth in 37 CFR 1.18(d).

The requirement for a fee for consideration of the petition to make special for applications pertaining to Green Technologies has been waived.

The instant petition complies with items 1 – 8 above. Accordingly, the above-identified application has been accorded "special" status.

Telephone inquires concerning this decision should be directed to Henry C. Yuen at 571-272-4856.

This application will be forwarded to the Technology Center Art Unit 3744 for action on the merits commensurate with this decision.

/Henry C. Yuen/

Henry C. Yuen
Quality Assurance Specialist
Technology Center TC 3700

UNITED STATES PATENT AND TRADEMARK OFFICE

Commissioner for Patents
United States Patent and Trademark Office
P.O. Box 1450
Alexandria, VA 22313-1450
www.uspto.gov

MAILED

JUN 10 2011

PCT LEGAL ADMINISTRATION

HARNESS, DICKEY & PIERCE, P.L.C.
P.O. BOX 828.
BLOOMFIELD HILLS MI 48303

In re Application of: FISHER, Alfred, J., et al.
U.S. Application No.: 13/099,594
Filing Date: May 03, 2011
Atty Docket No.: 0739D-000139/COB
For: MULTI-PAWL ROUND-RECLINER MECHANISM

DECISION ON PETITION UNDER 37 CFR 1.137(b)

This decision is issued in response to the "Petition For Revival Of An International Application For Patent Designating The U.S. Abandoned Unintentionally Under 37 CFR 1.137(b)" (Form PTO/SB/64/PCT) filed May 03, 2011. Applicants have paid the required petition fee.

BACKGROUND

On February 04, 2009, applicants filed international application PCT/US2009/033067. The application claimed a priority date of February 05, 2008, and it designated the United States. The deadline for submission of the basic national fee was thirty months from the priority date, i.e., August 05, 2010.

A request for entry into the U.S. national stage and payment of the basic national fee was not submitted on or prior to August 05, 2010. Accordingly, international application PCT/US2009/033067 became abandoned with respect to the United States at midnight on August 05, 2010 (see 35 U.S.C. 371(d); 37 CFR 1.495(h)).

On May 03, 2011, applicants filed the present application under 35 U.S.C. 111(a). The submission included an application data sheet (ADS) that identified the present application as a continuation of PCT/US2009/033067 and the petition for revival of international application PCT/US2009/033067 considered herein.

DISCUSSION

The present petition was accompanied by payment of the petition fee, and the petition includes a statement that "the entire delay in filing the required reply from the due date for the required reply until the filing of a grantable petition under 37 CFR 1.137(b) was unintentional," satisfying the requirements of 37 CFR 1.137(b)(2) and (3).

In addition, as discussed above, the ADS filed herein contains an appropriate reference identifying the present application as a continuation of PCT/US2009/033067.[1] The filing of a continuation application under 35 U.S.C. 111(a) is accepted as the "required reply" under 37 CFR 1.137(b)(1) (see MPEP section 711.03(c)(II)(A)).

Based on the above, the requirements of 37 CFR 1.137(b) have been satisfied. Therefore, the request to revive the international application as to the United States is appropriately granted.

CONCLUSION

The petition for revival under 37 CFR 1.137(b) is **GRANTED**.

International application PCT/US2009/033067 is revived for purposes of continuity only, and since continuity has been established by this decision reviving the international application, the international application is again abandoned in favor of the present continuing application number 13/099,594.

The application is being referred to the Office of Patent Application Processing for further processing in accordance with this decision.

/RichardMRoss/

Richard M. Ross
Attorney Advisor
Office of PCT Legal Administration
Telephone: (571) 272-3296

[1] It is noted that the first sentence of the specification identifies the application as a continuation of PCT/**EP**2009/033067, which does not appear to be a valid international application number and is inconsistent with the ADS.

Doc Code: PET.GREEN
Document Description: Petition for Green Tech Pilot

PTO/SB/420 (03-11)

PETITION TO MAKE SPECIAL UNDER THE GREEN TECHNOLOGY PILOT PROGRAM

Attorney Docket Number: 247919	Application Number (if known): 13/099,644	Filing date: May 3, 2011

First Named Inventor: Andreas Herrig

Title: DEVICE AND METHOD FOR MEASURING PRESSURE ON WIND TURBINE COMPONENTS

APPLICANT HEREBY REQUESTS TO PARTICIPATE IN THE GREEN TECHNOLOGY PILOT PROGRAM FOR THE ABOVE-IDENTIFIED APPLICATION. See Instruction Sheet on page 2.

This petition must be timely filed electronically using the USPTO electronic filing system, EFS-Web.

1. By filing this petition:

   Applicant is requesting early publication: Applicant hereby requests early publication under 37 CFR 1.219 and the publication fee set forth in 37 CFR 1.18(d) accompanies this request.

2. By filing this petition: applicant is agreeing to make an election without traverse in a telephonic interview and elect an invention that meets the eligibility requirements for the Green Technology Pilot Program, if the Office determines that the claims are not obviously directed to a single invention. See Instruction Sheet.

3. This request is accompanied by statements of special status for the eligibility requirement.

4. The application contains no more than three (3) independent claims and twenty (20) total claims.

5. The application does not contain any multiple dependent claims.

6. Other attachments: Statement Concerning the Basis for the Special Status

Signature /Allison W. Mages/	Date October 10, 2011
Name (Print/Typed) Allison W. Mages	Registration Number 57,275

Note: Signatures of all the inventors or assignees of record of the entire interest or their representative(s) are required in accordance with 37 CFR 1.33 and 11.18. Please see 37 CFR 1.4(d) for the form of the signature. If necessary, submit multiple forms for more than one signature, see below.*

☐ *Total of _____ forms are submitted.

If you need assistance in completing the form, call 1-800-PTO-9199 and select option 2.

IN THE UNITED STATES PATENT AND TRADEMARK OFFICE

First Named Inventor: Andreas Herrig	)
Confirmation No.: 1285	)
	)
Serial No.: 13/099,644	)
	)
Filing Date: May 3, 2011	)
	)
Atty Docket No.: 247919	)

VIA EFS
Commissioner for Patents
P.O. Box 1450
Alexandria, VA 22313-1450

Statement Concerning the Basis for the Special Status

SIR:

The present application relates generally to methods and systems for the pressure measurement on airfoils and hydrofoils, and more particularly, to methods and systems for the pressure measurement on wind turbine rotor blades. (See [0001]).

Applicant respectfully submits that Special Status is sought on the basis that the present invention materially contributes to the discovery or development of renewable energy resources.

The undersigned representative may be contacted at the number below to facilitate the resolution of any matters. Please charge any fees that are incurred in connection with this Statement to deposit account no. 09-0470.

Respectfully submitted,

General Electric Company

By : /Allison W. Mages/
Allison W. Mages
Reg. No. 57,275

Dated: October 10, 2011

GE Global Patent Operation
2 Corporate Drive, Suite 648
Shelton, CT 06484
203-944-6730

UNITED STATES PATENT AND TRADEMARK OFFICE

UNITED STATES DEPARTMENT OF COMMERCE
United States Patent and Trademark Office
Address: COMMISSIONER FOR PATENTS
P.O. Box 1450
Alexandria, Virginia 22313-1450
www.uspto.gov

APPLICATION NO.	FILING DATE	FIRST NAMED INVENTOR	ATTORNEY DOCKET NO.	CONFIRMATION NO.
13/099,644	05/03/2011	Andreas HERRIG	247919_1	1285

52082 7590 10/27/2011

General Electric Company
GE Global Patent Operation
2 Corporate Drive, Suite 648
Shelton, CT 06484

EXAMINER	
CAPUTO, LISA M	
ART UNIT	**PAPER NUMBER**
2855	

NOTIFICATION DATE	DELIVERY MODE
10/27/2011	ELECTRONIC

Please find below and/or attached an Office communication concerning this application or proceeding.

The time period for reply, if any, is set in the attached communication.

Notice of the Office communication was sent electronically on above-indicated "Notification Date" to the following e-mail address(es):

gpo.mail@ge.com
allyson.carnaroli@ge.com

UNITED STATES PATENT AND TRADEMARK OFFICE

Commissioner for Patents
United States Patent and Trademark Office
P.O. Box 1450
Alexandria, VA 22313-1450
www.uspto.gov

General Electric Company
GE Global Patent Operation
2 Corporate Drive, Suite 648
Shelton CT 06484

In re Application of	:	
HERRIG et al.	:	DECISION ON PETITION
Application No. 13/099,644	:	TO MAKE SPECIAL UNDER
Filed: May 03, 2011	:	THE GREEN TECHNOLOGY
Attorney Docket No. 247919_1	:	PILOT PROGRAM

This is a decision on the petition under 37 CFR 1.102, filed on October 10, 2011, to make the above-identified application special under the pilot program for applications pertaining to Green Technologies as set forth 74 Federal Register Notice 64666 (December 8, 2009) and amended by 75 Federal Register Notice 28554 (May 21, 2010) and 75 Federal Register Notice 69049 (November 10, 2010).

The petition is **DISMISSED**.

If reconsideration of this decision is desired, a petition for reconsideration must be filed within ONE (1) MONTH OR THIRTY (30) DAYS from the mail date of this decision, whichever is longer. No extension of this time limit can be granted under 37 CFR 1.136(a) or (b). The petition for reconsideration should include an exhaustive attempt to provide the lacking item(s) noted below, since, after a decision on the petition for reconsideration, no further reconsideration or review of the matter will be undertaken by the Director.

A grantable petition to make an application special under 37 CFR 1.102 and the pilot program as set forth in 74 FR 64666 must be directed to a nonprovisional application filed under 35 USC 111(a) or be a national stage entry under 35 USC 371, exclusive of any reissue applications and be filed prior to the date of the notice, December 8, 2009.

In order to qualify for special status, the following requirements must be met. 1) The application must have no more than 3 independent claims and no more than 20 total claims. 2) The application must not contain any multiple dependent claims. 3) The petition must state the basis for seeking special status, i.e., the claimed invention either: A) materially enhances the quality of the environment or B) materially contributes to: i) the discovery or development of renewable energy resources, ii) the more efficient utilization and conservation of energy resources, or iii) greenhouse gas emission reduction. 4) If the disclosure is not clear on its face that the claimed invention materially contributes under category (A) or (B), the petition must be accompanied by a statement by the applicant, assignee, or an attorney/agent registered to practice before the

Office explaining how the materiality standard is met. 5) A statement that applicant will agree to make an election without traverse in a telephonic interview if a restriction requirement is made by the examiner. 6) The petition to make special must be filed electronically. 7) The petition must be filed at least one day prior to the date that a first Office Action appears in the Patent Application Information Retrieval (PAIR) system. 8) The petition must be accompanied by a request for early publication in compliance with 37 CFR 1.219 and include the publication fee as set forth in 37 CFR 1.18(d).

The requirement for a fee for consideration of the petition to make special for applications pertaining to Green Technologies has been waived.

The petition lacks item 4.

In regard to item 4, the petition alleges that the invention relates to the discovery or development of renewable energy resources. The claims are directed to a device for measuring air pressure. The recitation of the wind turbine in claim 1 is considered intended use. The bodies of the claims merely recite fixing the device to a structure. The materiality standard does not permit an applicant to speculate as to how a hypothetical end-user might specially apply the invention in a manner that could contribute the discovery or development of renewable energy resources. The argument that the claimed invention could be used on a wind turbine rotor blade is considered speculate as to how a hypothetical end-user might specially apply the claimed invention.

Any reconsideration of this decision should be submitted through the USPTO electronic filing system, EFS-Web, and selecting the document description of "Petition for Green Tech Pilot" on the EFS-Web screen.

Telephone inquiries concerning this decision should be directed to Lee W. Young at 571-272-4549.

The application is being forwarded to the Technology Center Art Unit 2855 for action in its regular turn.

Lee W. Young
Quality Assurance Specialist
Technology Center 2600

IN THE UNITED STATES PATENT AND TRADEMARK OFFICE

First Named Inventor: 1285	)
Confirmation No.: 1285	)
	)
Serial No.: 13/099,644	)
	)
Filing Date: 05-03-2011	)
	)
Atty Docket No.: 247919-1	)

Commissioner for Patents
P.O. Box 1450
Alexandria, VA 22313-1450

Request for Reconsideration

SIR:

This is responsive to the Decision on Petition, dated as mailed 27 October 2011, in the above-referenced application.

Applicant respectfully requests reconsideration of Applicant's Petition to Make Special on the basis that the present invention materially contributes to the development of renewable energy resources or energy conservation.

The Decision to Make Special Under the Green Technology Pilot Program (hereinafter "the Decision") alleges that the claims are directed to a device for measuring air pressure. The Decision alleges that the recitation of the wind turbine in claim 1 is considered intended use. The Decision further alleges that the bodies of the claims merely recite fixing the device to a structure. The Decision states that the argument that the invention could be used on a wind turbine rotor blade is considered speculative as to how a hypothetical end-user might specially apply the claimed invention. Applicant does not agree with the comments made in the Decision.

Applicant respectfully submits that the use of the claimed invention with a wind turbine, or a wind turbine rotor blade, is not merely speculative. Applicant

directs Examiner's attention to the figures of the present application. Figure 1 is a perspective view of an exemplary wind turbine, Figure 2 is an enlarged sectional view of a portion of the wind turbine shown in Figure 1 and Figure 4 is a side view of a cross section of a wind turbine rotor blade with a device according to embodiments. (see at least paragraphs [0011]-[0012] and [0014]). As such, Applicant respectfully submits that use of the claimed invention with a wind turbine, or a wind turbine rotor blade, is not a speculative use.

Applicant respectfully submits that the present invention relates generally to methods and systems for the pressure measurement on airfoils and hydrofoils, and more particularly, to methods and systems for the pressure measurement on wind turbine rotor blades. (see at least paragraph [0001]).

The aerodynamic properties of a rotor blade are known to be related to electrical power output of a wind turbine. Electrical power output increases as the aerodynamic properties are optimized. In order to optimize the aerodynamic properties of airfoils, hydrofoils, and particularly of wind turbine rotor blades, the pressure distribution around the profile of the same may be measured. For this purpose, a number of techniques are well known. Amongst others, it is known to drill small holes into the surface of the structure and to apply pressure tubes which are routed to a measurement system inside the structure. Further, the application of pitot tubes or pressure sensors on the surface of the profile of a foil or wing is also applied. If the pressure close to the surface of the structure shall be measured, pressure sensors are typically mounted in small holes in the surface, which allows for a measurement at face level. (see at least paragraph [0003]).

However, this involves a number of disadvantages. The surface of the rotor blade or airfoil is typically manipulated by drilling holes in which the sensors

are placed. Though sensors may also be mounted to the aerodynamic face of the structure, e.g. via the use of adhesives, this can lead to an undesirable distortion of the airflow in the vicinity of the attached sensor and thus to biased or misleading measurement results. Further, for acquiring the measurement data, wires have to be installed. These are typically routed through the interior of the blade or wing, involving a significant amount of labor, which is time consuming and at least partially leads to changes in the structure of the blade or wing. Sometimes, it may also be difficult or impossible to route wires through a structure because of its structural properties or accessibility. The wires may also be installed on the surface of an airfoil or rotor blade, which requires less time and effort, but may contribute to a distortion of the airflow in the vicinity of the sensors, and thus to a degradation of the quality of the acquired data. (see at least paragraph [0004]).

The embodiments described herein include a device for measuring fluid pressures around a structure without the need for making structural modifications to the structure. More specifically, the device allows for measuring an air pressure in the vicinity of wings, wind turbine rotor blades or other parts of wind turbines such as hubs or nacelle parts. (see at least paragraph [0022]). Embodiments of the present invention provide the benefit of measuring fluid pressures around the structure without adversely affecting the aerodynamic properties of the structure. As such, embodiments of the present invention help to optimize the aerodynamic properties of airfoils, hydrofoils, and particularly of wind turbine rotor blades. As aerodynamic properties are optimized, electrical power output increases. As such, embodiments of the present invention promote increased production of renewable energy resources and renewable energy.

The undersigned attorney may be contacted at the number below to facilitate the resolution of any matters. Please charge any fees that are incurred in connection with this Statement to deposit account no. 09-0470.

Respectfully submitted,

General Electric Company

By : /Allison W Mages/
Allison Weiner Mages
Reg. No. 57,275

Dated: November 28, 2011

GE Global Patent Operation
2 Corporate Drive, Suite 648
Shelton, CT 06484
203-944-6730

UNITED STATES PATENT AND TRADEMARK OFFICE

UNITED STATES DEPARTMENT OF COMMERCE
United States Patent and Trademark Office
Address: COMMISSIONER FOR PATENTS
P.O. Box 1450
Alexandria, Virginia 22313-1450
www.uspto.gov

APPLICATION NO.	FILING DATE	FIRST NAMED INVENTOR	ATTORNEY DOCKET NO.	CONFIRMATION NO.
13/099,644	05/03/2011	Andreas HERRIG	247919_1	1285

52082 7590 12/12/2011

General Electric Company
GE Global Patent Operation
2 Corporate Drive, Suite 648
Shelton, CT 06484

EXAMINER	
CAPUTO, LISA M	
ART UNIT	PAPER NUMBER
2855	

NOTIFICATION DATE	DELIVERY MODE
12/12/2011	ELECTRONIC

Please find below and/or attached an Office communication concerning this application or proceeding.

The time period for reply, if any, is set in the attached communication.

Notice of the Office communication was sent electronically on above-indicated "Notification Date" to the following e-mail address(es):

gpo.mail@ge.com
allyson.carnaroli@ge.com

UNITED STATES PATENT AND TRADEMARK OFFICE

Commissioner for Patents
United States Patent and Trademark Office
P.O. Box 1450
Alexandria, VA 22313-1450
www.uspto.gov

12/12/11

General Electric Company
GE Global Patent Operation
2 Corporate Drive, Suite 648
Shelton CT 06484

In re Application of :
Andreas Herrig et al. : DECISION ON PETITION
Application No. 13/099,644 : TO MAKE SPECIAL UNDER
Filed: May 03, 2011 : THE GREEN TECHNOLOGY
Attorney Docket No. 247919_1 : PILOT PROGRAM

This is a decision on the petition under 37 CFR 1.102, filed November 28, 2011, to make the above-identified application special under the pilot program for applications pertaining to Green Technologies as set forth in 74 Federal Register Notice 64666 (December 8, 2009) and amended by 75 Federal Register Notice 28554 (May 21, 2010) and 75 Federal Register Notice 69049 (November 10, 2010).

The petition is **GRANTED**.

A grantable petition to make an application special under 37 CFR 1.102 and the pilot program as set forth in 74 FR 64666 must be directed to a nonprovisional application filed under 35 USC 111(a) or be a national stage entry under 35 USC 371, exclusive of any reissue applications.

In order to qualify for special status, the following requirements must be met. 1) The application must have no more than 3 independent claims and no more than 20 total claims. 2) The application must not contain any multiple dependent claims. 3) The petition must state the basis for seeking special status, i.e., the claimed invention either: A) materially enhances the quality of the environment or B) materially contributes to: i) the discovery or development of renewable energy resources, ii) the more efficient utilization and conservation of energy resources, or iii) greenhouse gas emission reduction. 4) If the disclosure is not clear on its face that the claimed invention materially contributes under category (A) or (B), the petition must be accompanied by a statement by the applicant, assignee, or an attorney/agent registered to practice before the Office explaining how the materiality standard is met. 5) A statement that applicant will agree to make an election without traverse in a telephonic interview if a restriction requirement is made by the examiner. 6) The petition to make special must be filed electronically. 7) The petition must be filed at least one day prior to the date that a first Office Action appears in the Patent Application Information Retrieval (PAIR) system. 8) The petition must be accompanied by a request for early publication in compliance with 37 CFR 1.219 and include the publication fee as set forth in 37 CFR 1.18(d).

The requirement for a fee for consideration of the petition to make special for applications pertaining to Green Technologies has been waived.

The instant petition complies with items 1 – 8 above. Accordingly, the above-identified application has been accorded "special" status.

Telephone inquires concerning this decision should be directed to Blaine Copenheaver at 571-272-1156.

The application is being forwarded to the examiner for action on the merits commensurate with this decision.

/Blaine Copenheaver/

Blaine Copenheaver
Quality Assurance Specialist
Technology Center 1700

UNITED STATES PATENT AND TRADEMARK OFFICE

Commissioner for Patents
United States Patent and Trademark Office
P.O. Box 1450
Alexandria, VA 22313-1450
www.uspto.gov

In re Application of
Sigram Schindler

Application No. 13099726

Filed: May 3,2011

Attorney Docket No. 8096.064.CNUS04

:
:
:DECISION ON PETITION TO MAKE SPECIAL
:UNDER 37 CFR 1.102(c)(1)
:

This is a decision on the electronic petition under 37 CFR 1.102 (c)(1), filed 28-JUN-2011 to make the above-identified application special based on applicant's age as set forth in MPEP § 708.02, Section IV.

The petition is **GRANTED**.

A grantable petition to make an application special under 37 CFR 1.102(c)(1), MPEP § 708.02, Section IV: Applicant's Age must include a statement by applicant or a registered practitioner having evidence that applicant is at least 65 years of age. No fee is required.

Accordingly, the above-identified application has been accorded "special" status and will be taken up for action by the examiner upon the completion of all pre-examination processing.

Telephone inquiries concerning this electronic decision should be directed to the Electronic Business Center at 866-217-9197.

All other inquiries concerning either the examination or status of the application should be directed to the Technology Center.

Doc code : PET.OP.AGE
Description : Petition to make special based on Age/Health

PTO/SB/130 (07-09)
Approved for use through 07/31/2012. OMB 0651- 0031
U.S. Patent and Trademark Office; U.S. DEPARTMENT OF COMMERCE
Under the Paperwork Reduction Act of 1995, no persons are required to respond to a collection of information unless it contains a valid OMB control number

PETITION TO MAKE SPECIAL BASED ON AGE FOR ADVANCEMENT OF EXAMINATION UNDER 37 CFR 1.102(c)(1)

Application Information

Application Number	13099726	Confirmation Number	1460	Filing Date	2011-05-03
Attorney Docket Number (optional)	8096.064.CNUS04	Art Unit	2461	Examiner	unknown
First Named Inventor	Sigram Schindler				
Title of Invention	Method For Transmitting Data In a Telecommunications Network And Switch For Implementing Said Method				

Attention: Office of Petitions
An application may be made special for advancement of examination upon filing of a petition showing that the applicant is 65 years of age, or more. No fee is required with such a petition. See 37 CFR 1.102(c)(1) and MPEP 708.02 (IV).

APPLICANT HEREBY PETITIONS TO MAKE SPECIAL FOR ADVANCEMENT OF EXAMINATION IN THIS APPLICATION UNDER 37 CFR 1.102(c)(1) and MPEP 708.02 (IV) ON THE BASIS OF THE APPLICANT'S AGE.

A grantable petition requires one of the following items:
(1) Statement by one named inventor in the application that he/she is 65 years of age, or more; or
(2) Certification by a registered attorney/agent having evidence such as a birth certificate, passport, driver's license, etc. showing one named inventor in the application is 65 years of age, or more.

Name of Inventor who is 65 years of age, or older

Given Name	Middle Name	Family Name	Suffix
Sigram		Schindler	

A signature of the applicant or representative is required in accordance with 37 CFR 1.33 and 10.18.
Please see 37 CFR 1.4(d) for the format of the signature.

Select (1) or (2) :

○ (1) I am an inventor in this application and I am 65 years of age, or more.

● (2) I am an attorney or agent registered to practice before the Patent and Trademark Office, and I certify that I am in possession of evidence, and will retain such in the application file record, showing that the inventor listed above is 65 years of age, or more.

Signature	/Vincent M DeLuca/	Date (YYYY-MM-DD)	2011-06-28
Name	Vincent M DeLuca	Registration Number	32408

PTO/SB/130 (07-09)
Approved for use through 07/31/2012. OMB 0651- 0031
U.S. Patent and Trademark Office; U.S. DEPARTMENT OF COMMERCE
Under the Paperwork Reduction Act of 1995, no persons are required to respond to a collection of information unless it contains a valid OMB control number

Privacy Act Statement

The Privacy Act of 1974 (P.L. 93-579) requires that you be given certain information in connection with your submission of the attached form related to a patent application or patent. Accordingly, pursuant to the requirements of the Act, please be advised that: (1) the general authority for the collection of this information is 35 U.S.C. 2(b)(2); (2) furnishing of the information solicited is voluntary; and (3) the principal purpose for which the information is used by the U.S. Patent and Trademark Office is to process and/or examine your submission related to a patent application or patent. If you do not furnish the requested information, the U.S. Patent and Trademark Office may not be able to process and/or examine your submission, which may result in termination of proceedings or abandonment of the application or expiration of the patent.

The information provided by you in this form will be subject to the following routine uses:

1. The information on this form will be treated confidentially to the extent allowed under the Freedom of Information Act (5 U.S.C. 552) and the Privacy Act (5 U.S.C. 552a). Records from this system of records may be disclosed to the Department of Justice to determine whether the Fr eedom of Information Act requires disclosure of these records.

2. A record from this system of records may be disclosed, as a routine use, in the course of presenting evidence to a court, magistrate, or administrative tribunal, including disclosures to opposing counsel in the course of settlement negotiations.

3. A record in this system of records may be disclosed, as a routine use, to a Member of Congress submitting a request involving an individual, to whom the record pertains, when the individual has requested assistance from the Member with respect to the subject matter of the record.

4. A record in this system of records may be disclosed, as a routine use, to a contractor of the Agency having need for the information in order to perform a contract. Recipients of information shall be required to comply with the requirements of the Privacy Act of 1974, as amended, pursuant to 5 U.S.C. 552a(m).

5. A record related to an International Application filed under the Patent Cooperation Treaty in this system of records may be disclosed, as a routine use, to the International Bureau of the World Intellectual Property Organization, pursuant to the Patent Cooperation Treaty.

6. A record in this system of records may be disclosed, as a routine use, to another federal agency for purposes of National Security review (35 U.S.C. 181) and for review pursuant to the Atomic Energy Act (42 U.S.C. 218(c)).

7. A record from this system of records may be disclosed, as a routine use, to the Administrator, General Services, or his/her designee, during an inspection of records conducted by GSA as part of that agency's responsibility to recommend improvements in records management practices and programs, under authority of 44 U.S.C. 2904 and 2906. Such disclosure shall be made in accordance with the GSA regulations governing inspection of records for this purpose, and any other relevant (i.e., GSA or Commerce) directive. Such disclosure shall not be used to make determinations about indivi duals.

8. A record from this system of records may be disclosed, as a routine use, to the public after either publication of the application pursuant to 35 U.S.C. 122(b) or issuance of a patent pursuant to 35 U.S.C. 151. Further, a record may be disclosed, subject to the limitations of 37 CFR 1.14, as a routine use, to the public if the record was filed in an application which became abandoned or in which the proceedings were terminated and which application is referenced by either a published application, an application open to public inspections or an issued patent.

9. A record from this system of records may be disclosed, as a routine use, to a Federal, State, or local law enforcement agency, if the USPTO becomes aware of a violation or potential violation of law or regulation.

UNITED STATES PATENT AND TRADEMARK OFFICE

UNITED STATES DEPARTMENT OF COMMERCE
United States Patent and Trademark Office
Address: COMMISSIONER FOR PATENTS
P.O. Box 1450
Alexandria, Virginia 22313-1450
www.uspto.gov

APPLICATION NO.	FILING DATE	FIRST NAMED INVENTOR	ATTORNEY DOCKET NO.	CONFIRMATION NO.
13/099,761	05/03/2011	DONG NYUNG LIM	HI-0627.01	1535

34610 7590 06/08/2011

KED & ASSOCIATES, LLP
P.O. Box 8638
Reston, VA 20195

EXAMINER	
ART UNIT	PAPER NUMBER
2875	

MAIL DATE	DELIVERY MODE
06/08/2011	PAPER

Please find below and/or attached an Office communication concerning this application or proceeding.

The time period for reply, if any, is set in the attached communication.

UNITED STATES PATENT AND TRADEMARK OFFICE

Commissioner for Patents
United States Patent and Trademark Office
P.O. Box 1450
Alexandria, VA 22313-1450
www.uspto.gov

KED & ASSOCIATES, LLP
P.O. Box 8638
Reston VA 20195

In re Application of
LIM et al.
Application No.: 13/099,761
Filed: 03 May 2011
Attorney Docket No.: HI-0627.01
For: LIGHTING DEVICE

: PARTICIPATE IN THE PATENT
: PROSECUTION HIGHWAY
: PROGRAM AND PETITION
: TO MAKE SPECIAL UNDER
: 37 CFR 1.102(a)

: DECISION ON REQUEST TO

This is a decision on the request to participate in the Patent Prosecution Highway (PPH) program and the petition under 37 CFR 1.102(a), filed 04 May 2011 and renewed on 24 May 2011, to make the above-identified application special.

The request and petition are **GRANTED**.

Discussion

A grantable request to participate in the PPH program and petition to make special require:

1. The U.S. application is

   a. a Paris Convention application which either
      i. validly claims priority under 35 U.S.C. 119(a) and 37 CFR 1.55 to one or more applications filed in the KIPO, or
      ii. validly claims priority under 35 U.S.C. 119(a)/365(a) to a PCT application that contains no priority claims,

   or

   b. a national stage application under the PCT (an application which entered the national stage in the U.S. from a PCT international application after compliance with 35 U.S.C. 371), which PCT application
      i. validly claims priority under 35 U.S.C. 365(b) to an application filed in the KIPO, or
      ii. validly claims priority under 35 U.S.C. 365(b) to a PCT application that contains no priority claims, or
      iii. contains no priority claim,

   or

   c. a so-called bypass application filed under 35 U.S.C. 111(a) which validly claims benefit under 35 U.S.C. 120 to a PCT application, which PCT application
      i. validly claims priority under 35 U.S.C. 365(b) to an application filed in the KIPO, or

ii. validly claims priority under 35 U.S.C. 365(b) to a PCT application that contains no priority claims, or
iii. contains no priority claim;

2. Applicant must submit a copy of:
   a. The allowable/patentable claim(s) from the KR application(s);
   b. An English translation of the allowable/patentable claim(s), and
   c. A statement that the English translation is accurate (if the claims were published in a language other than English);
3. Applicant must:
   a. Ensure that all the claims in the U.S. application must sufficiently correspond or be amended to sufficiently correspond to the allowable/patentable claim(s) in the KR application(s), and
   b. Submit a claims correspondence table in English;
4. Examination of the U.S. application has not begun;
5. Applicant must submit:
   a. A copy of all the office actions (which are relevant to patentability), excluding "Decision to Grant a Patent" from each of the KR application(s) containing the allowable/patentable claim(s);
   b. An English language translation of the KIPO office action; and
   c. A statement that the English translation is accurate (if the office actions are not in the English language);
6. Applicant must submit:
   a. An IDS listing the documents cited by the KIPO examiner in the KIPO office action (unless already filed in this application); and
   b. Copies of all the documents cited in the KIPO office action, except U.S. patents or U.S. patent application publications (unless already filed in this application);

The request to participate in the PPH program and petition comply with the above requirements. Accordingly, the above-identified application has been accorded "special" status.

Telephone inquiries concerning this decision should be directed to Lee W. Young at 571-272-4549.

All other inquiries concerning the examination or status of the application is accessible in the PAIR system at http://uspto.gov/ebc/index.html.

Lee W. Young
TQAS
Technology Center 2800 – Semiconductors
Electrical & Optical Systems & Components

UNITED STATES PATENT AND TRADEMARK OFFICE

Commissioner for Patents
United States Patent and Trademark Office
P.O. Box 1450

MAILED

APR 16 2012

OFFICE OF PETITIONS

BLAKELY SOKOLOFF TAYLOR & ZAFMAN LLP
1279 OAKMEAD PARKWAY
SUNNYVALE CA 94085-4040

In re Application of : DECISION ON REQUEST TO
Takuya OOTANI : PARTICIPATE IN PPH PROGRAM
Application No. 13/099,811 : AND PETITION TO MAKE SPECIAL
Filed: May 3, 2011 : UNDER 37 CFR 1.102(a)
Atty. Docket No.: 8073P1210 :
For: INFORMATION PROCESSING APPARATUS AND INFORMATION PROCESSING METHOD

This is a decision on the request to participate in the Patent Prosecution Highway (PPH) program and the petition under 37 CFR 1.102(a), filed February 16, 2012 to make the above-identified application special.

The petition and request are **GRANTED**.

A grantable request to participate in the PPH (patent prosecution highway) program and petition to make special require:

1. The U.S. application is a Paris convention application that either validly claims priority under 35 U.S.C. 119(a) and 37 CFR 1.55 to one or more application filed in the JPO or to a PCT application that contains no priority claims, or is a national stage application under the PCT that either validly claims priority to an application filed in the JPO or to a PCT application that contains no priority claims, or that contains no priority claim, or is a bypass application filed under 35 U.S.C. 111(a) which validly claims benefit under 35 U.S.C. 120 to a PCT application that validly claims priority to an application filed in the JPO, to a PCT application that contains no priority claims, or contain no priority claim;

2. Applicant must ensure all the claims in the U.S. application sufficiently correspond or amended to sufficiently correspond to the allowable/patentable claim(s) in the JPO application and submit a claim correspondence table in English;

3. Examination of the U.S. application has not begun;

4. Applicant must submit a copy of the office action(s) just prior to the "Decision to Grant a Patent" from each of the JPO application(s) containing the allowable/patentable claim(s), or if the allowable/patentable claim(s) are from a "Notification of Reasons for Refusal" then the Notification of Reasons for Refusal, or if the JPO application is a first action allowance then no office action from the JPO is necessary should be indicated on the request/petition form, and an English language translation of the JPO Office action if submitted; and

5. Applicant must submit an IDS listing the documents cited by the JPO examiner in the JPO office action, unless already submitted in this application, and copies of the documents except U.S. patents or U.S. patent application publications, unless already submitted in this application.

The request to participate in the PPH program and petition comply with the above requirements. Accordingly, the above-identified application has been accorded "special" status.

Telephone inquiries concerning this decision should be directed to Robert DeWitty, Petition Attorney, Office of Petitions at 571-272-8427.

All other inquiries concerning the examination or status of the application is accessible in the PAIR system at http://www.uspto.gov/ebc/index.html.

This application will be forwarded to Technology Center Art Unit 2158 for action commensurate with this decision.

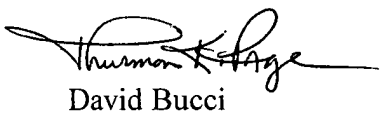

David Bucci
Petitions Examiner
Office of Petitions

UNITED STATES PATENT AND TRADEMARK OFFICE

Commissioner for Patents
United States Patent and Trademark Office
P.O. Box 1450
Alexandria, VA 22313-1450
www.uspto.gov

MAILED

JUL 29 2011

OFFICE OF PETITIONS

Paper No.

BERENATO & WHITE, LLC
6550 ROCK SPRING DRIVE
SUITE 240
BETHESDA MD 20817

In re Application of :
David Allen :
Application No. 13/099,860 : DECISION ACCORDING STATUS
Filed: May 3, 2011 : UNDER 37 C.F.R. § 1.47(A)
Attorney Docket Number: :
5211.060_CON :
Title: JACKETED LED ASSEMBLIES :
AND LIGHT STRINGS CONTAINING :
SAME :

This is in response to the request for the Office to accord Rule 1.47 status to the above-identified application, filed May 3, 2011, on initial deposit of this application.

On May 3, 2011, the application was filed, identifying David Allen as the sole inventor. This petition was deposited on filing.

This application is a continuation of 11/785,434. Petitioner has indicated that Rule 1.47 status was accorded to prior-filed application No. 11/785,434 via the mailing of a decision on August 6, 2007.

37 C.F.R. § 1.63(d)(3) sets forth, *in toto*:

> Where the executed oath or declaration of which a copy is submitted for a continuation or divisional application was originally filed in a prior application accorded status under § 1.47, the copy of the executed oath or declaration for such prior application must be accompanied by:
> (i) A copy of the decision granting a petition to accord § 1.47 status to the prior application, unless all inventors or legal

representatives have filed an oath or declaration to join in an application accorded status under § 1.47 of which the continuation or divisional application claims a benefit under 35 U.S.C. 120, 121, or 365(c); and
(ii) If one or more inventor(s) or legal representative(s) who refused to join in the prior application or could not be found or reached has subsequently joined in the prior application or another application of which the continuation or divisional application claims a benefit under 35 U.S.C. 120, 121, or 365(c), a copy of the subsequently executed oath(s) or declaration(s) filed by the inventor or legal representative to join in the application.

See also MPEP § 201.06(c)(VI).

With this request for the Office to accord Rule 1.47 status to the above-identified application, Petitioner has further included a copy of the decision granting a petition to accord Rule 1.47 status to the prior application.

Therefore, the petition is **GRANTED** and this application is hereby accorded Rule 1.47(a) status.

As provided in Rule 1.47(c), this Office will not forward notice of this application's filing to the non-signing inventor at the address given on the declaration, and notice of the filing of this application will not be published in the Official Gazette.

The Technology Center will be notified of this decision. The Technology Center's support staff will notify the Examiner of this decision, so that the present application can receive further processing in due course.

Telephone inquiries regarding *this decision* should be directed to the undersigned at (571) 272-3225.[1] All other inquiries concerning examination procedures or status of the application should be directed to the Technology Center.

/Paul Shanoski/
Paul Shanoski
Senior Attorney
Office of Petitions

---

1 Petitioner will note that all practice before the Office should be in writing, and the action of the Office will be based exclusively on the written record in the Office. See 37 C.F.R. § 1.2. As such, Petitioner is reminded that no telephone discussion may be controlling or considered authority for Petitioner's further action(s).

Doc Code: PET.GREEN
Document Description: Petition for Green Tech Pilot

PTO/SB/420 (03-11)

PETITION TO MAKE SPECIAL UNDER THE GREEN TECHNOLOGY PILOT PROGRAM

Attorney Docket Number: K-1171	Application Number (if known): 13/099,890	Filing date: May 3, 2011

First Named Inventor: Hankyu CHO

Title: A LIGHT EMITTING DIODE BASED LAMP

APPLICANT HEREBY REQUESTS TO PARTICIPATE IN THE GREEN TECHNOLOGY PILOT PROGRAM FOR THE ABOVE-IDENTIFIED APPLICATION. See Instruction Sheet on page 2.

This petition must be timely filed electronically using the USPTO electronic filing system, EFS-Web.

1. By filing this petition:

   Applicant is requesting early publication: Applicant hereby requests early publication under 37 CFR 1.219 and the publication fee set forth in 37 CFR 1.18(d) accompanies this request.

2. By filing this petition: applicant is agreeing to make an election without traverse in a telephonic interview and elect an invention that meets the eligibility requirements for the Green Technology Pilot Program, if the Office determines that the claims are not obviously directed to a single invention. See Instruction Sheet.

3. This request is accompanied by statements of special status for the eligibility requirement.

4. The application contains no more than three (3) independent claims and twenty (20) total claims.

5. The application does not contain any multiple dependent claims.

6. Other attachments: _____

Signature	Date 05/12/2011
Name (Print/Typed) David C. Oren	Registration Number 38,694

Note: *Signatures of all the inventors or assignees of record of the entire interest or their representative(s) are required in accordance with 37 CFR 1.33 and 11.18. Please see 37 CFR 1.4(d) for the form of the signature. If necessary, submit multiple forms for more than one signature, see below*.*

■ *Total of 1 forms are submitted.

If you need assistance in completing the form, call 1-800-PTO-9199 and select option 2.

Docket No.: **K-1171** PATENT

IN THE UNITED STATES PATENT AND TRADEMARK OFFICE

In re Application of Confirmation No.: **1760**

Hankyu CHO, Dongki PAIK and Euna MOON

Serial No.: **13/099,890**

Filed: **May 3, 2011** Customer No.: **34610**

For: **A LIGHT EMITTING DIODE BASED LAMP**

STATEMENT OF SPECIAL STATUS FOR ELIGIBILITY UNDER THE GREEN TECHNOLOGY PILOT PROGRAM

U.S. Patent and Trademark Office
Customer Service Window, **MAIL STOP PETITIONS**
Randolph Building
401 Dulany Street
Alexandria, Virginia 22314

Sir:

Special status is sought under 37 C.F.R. §1.102 because the invention materially contributes to the more efficient utilization and conservation of energy resources.

Respectfully submitted,
KED & ASSOCIATES, LLP

David C. Oren
Registration No. 38,694

Correspondence Address:
P.O. Box 8638
Reston, VA 20195
703 766-3777 DCO/kah
Date: May 12, 2011
Please direct all correspondence to Customer Number 34610

UNITED STATES PATENT AND TRADEMARK OFFICE

UNITED STATES DEPARTMENT OF COMMERCE
United States Patent and Trademark Office
Address: COMMISSIONER FOR PATENTS
P.O. Box 1450
Alexandria, Virginia 22313-1450
www.uspto.gov

APPLICATION NO.	FILING DATE	FIRST NAMED INVENTOR	ATTORNEY DOCKET NO.	CONFIRMATION NO.
13/099,890	05/03/2011	Hankyu CHO	K-1171	1760

34610 7590 05/25/2011

KED & ASSOCIATES, LLP
P.O. Box 8638
Reston, VA 20195

EXAMINER	
ART UNIT	PAPER NUMBER
2875	

MAIL DATE	DELIVERY MODE
05/25/2011	PAPER

Please find below and/or attached an Office communication concerning this application or proceeding.

The time period for reply, if any, is set in the attached communication.

UNITED STATES PATENT AND TRADEMARK OFFICE

Commissioner for Patents
United States Patent and Trademark Office
P.O. Box 1450
Alexandria, VA 22313-1450
www.uspto.gov

KED & ASSOCIATES, LLP
P.O. Box 8638
Reston VA 20195

In re Application of	:	
CHO et al.	:	DECISION ON PETITION
Application No. 13/099,890	:	TO MAKE SPECIAL UNDER
Filed: May 03, 2011	:	THE GREEN TECHNOLOGY
Attorney Docket No. K-1171	:	PILOT PROGRAM

This is a decision on the petition under 37 CFR 1.102, filed on May 12, 2011, to make the above-identified application special under the pilot program for applications pertaining to Green Technologies as set forth 74 Federal Register Notice 64666 (December 8, 2009) and amended by 75 Federal Register Notice 28554 (May 21, 2010) and 75 Federal Register Notice 69049 (November 10, 2010).

The petition is **GRANTED**.

A grantable petition to make an application special under 37 CFR 1.102 and the pilot program as set forth in 74 FR 64666 must be directed to a nonprovisional application filed under 35 USC 111(a) or be a national stage entry under 35 USC 371, exclusive of any reissue applications.

In order to qualify for special status, the following requirements must be met. 1) The application must have no more than 3 independent claims and no more than 20 total claims. 2) The application must not contain any multiple dependent claims. 3) The petition must state the basis for seeking special status, i.e., the claimed invention either: A) materially enhances the quality of the environment or B) materially contributes to: i) the discovery or development of renewable energy resources, ii) the more efficient utilization and conservation of energy resources, or iii) greenhouse gas emission reduction. 4) If the disclosure is not clear on its face that the claimed invention materially contributes under category (A) or (B), the petition must be accompanied by a statement by the applicant, assignee, or an attorney/agent registered to practice before the Office explaining how the materiality standard is met. 5) A statement that applicant will agree to make an election without traverse in a telephonic interview if a restriction requirement is made by the examiner. 6) The petition to make special must be filed electronically. 7) The petition must be filed at least one day prior to the date that a first Office Action appears in the Patent Application Information Retrieval (PAIR) system. 8) The petition must be accompanied by a request for early publication in compliance with 37 CFR 1.219 and include the publication fee as set forth in 37 CFR 1.18(d).

The requirement for a fee for consideration of the petition to make special for applications pertaining to Green Technologies has been waived.

The instant petition complies with items 1 – 8 above. Accordingly, the above-identified application has been accorded "special" status.

Telephone inquires concerning this decision should be directed to Lee W. Young at 571-272-4549.

The application is being forwarded to the Technology Center Art Unit 2875 for action on the merits commensurate with this decision.

Lee W. Young
Quality Assurance Specialist
Technology Center 2800

Doc Code: PET.GREEN
Document Description: Petition for Green Tech Pilot

PTO/SB/420 (03-11)

PETITION TO MAKE SPECIAL UNDER THE GREEN TECHNOLOGY PILOT PROGRAM

Attorney Docket Number:	LS00004 PCT/USCON	Application Number (if known):	13/099,986	Filing date:	May 3, 2011

First Named Inventor: HU, Zhihao

Title: ENHANCED PRODUCTION OF FATTY ACID

APPLICANT HEREBY REQUESTS TO PARTICIPATE IN THE GREEN TECHNOLOGY PILOT PROGRAM FOR THE ABOVE-IDENTIFIED APPLICATION. See Instruction Sheet on page 2.

This petition must be timely filed electronically using the USPTO electronic filing system, EFS-Web.

1. By filing this petition:

   Applicant is requesting early publication: Applicant hereby requests early publication under 37 CFR 1.219 and the publication fee set forth in 37 CFR 1.18(d) accompanies this request.

2. By filing this petition: applicant is agreeing to make an election without traverse in a telephonic interview and elect an invention that meets the eligibility requirements for the Green Technology Pilot Program, if the Office determines that the claims are not obviously directed to a single invention. See Instruction Sheet.

3. This request is accompanied by statements of special status for the eligibility requirement.

4. The application contains no more than three (3) independent claims and twenty (20) total claims.

5. The application does not contain any multiple dependent claims.

6. Other attachments: Statements of Special Status for the Eligibility Requirements and Preliminary Amendment

Signature		Date	11/11/11
Name (Print/Typed)	Linda R. Judge	Registration Number	42702

Note: *Signatures of all the inventors or assignees of record of the entire interest or their representative(s) are required in accordance with 37 CFR 1.33 and 11.18. Please see 37 CFR 1.4(d) for the form of the signature. If necessary, submit multiple forms for more than one signature, see below*.*

☐ *Total of 1 forms are submitted.

If you need assistance in completing the form, call 1-800-PTO-9199 and select option 2.

UNITED STATES PATENT AND TRADEMARK OFFICE

UNITED STATES DEPARTMENT OF COMMERCE
United States Patent and Trademark Office
Address: COMMISSIONER FOR PATENTS
P.O. Box 1450
Alexandria, Virginia 22313-1450
www.uspto.gov

APPLICATION NO.	FILING DATE	FIRST NAMED INVENTOR	ATTORNEY DOCKET NO.	CONFIRMATION NO.
13/099,986	05/03/2011	Zhihao Hu	LS00004 PCT/US CON	1927

80782 7590 11/17/2011

LS9, Inc.
600 Gateway Boulevard
South San Francisco, CA 94080

EXAMINER	
KAM, CHIH MIN	

ART UNIT	PAPER NUMBER
1656	

NOTIFICATION DATE	DELIVERY MODE
11/17/2011	ELECTRONIC

Please find below and/or attached an Office communication concerning this application or proceeding.

The time period for reply, if any, is set in the attached communication.

Notice of the Office communication was sent electronically on above-indicated "Notification Date" to the following e-mail address(es):

chgpatent@leydig.com
ljudge@ls9.com

UNITED STATES PATENT AND TRADEMARK OFFICE

Commissioner for Patents
United States Patent and Trademark Office
P.O. Box 1450
Alexandria, VA 22313-1450
www.uspto.gov

NOV 17 2011

LS9, Inc.
600 Gateway Boulevard
South San Francisco CA 94080

In re Application of

HU, Zhihao *et al.*	:	DECISION ON PETITION
Application No. 13/099986	:	TO MAKE SPECIAL UNDER
Filed: May 3, 2011	:	THE GREEN TECHNOLOGY
Attorney Docket No. LS00004 PCT/US CON	:	PILOT PROGRAM

This is a decision on the petition under 37 CFR 1.102, filed November 11, 2011, to make the above-identified application special under the pilot program for applications pertaining to Green Technologies as set forth in 74 Federal Register Notice 64666 (December 8, 2009) and amended by 75 Federal Register Notice 28554 (May 21, 2010) and 75 Federal Register Notice 69049 (November 10, 2010).

The petition is **GRANTED**.

A grantable petition to make an application special under 37 CFR 1.102 and the pilot program as set forth in 74 FR 64666 must be directed to a nonprovisional application filed under 35 USC 111(a) or be a national stage entry under 35 USC 371, exclusive of any reissue applications.

In order to qualify for special status, the following requirements must be met. 1) The application must have no more than 3 independent claims and no more than 20 total claims. 2) The application must not contain any multiple dependent claims. 3) The petition must state the basis for seeking special status, i.e., the claimed invention either: A) materially enhances the quality of the environment or B) materially contributes to: i) the discovery or development of renewable energy resources, ii) the more efficient utilization and conservation of energy resources, or iii) greenhouse gas emission reduction. 4) If the disclosure is not clear on its face that the claimed invention materially contributes under category (A) or (B), the petition must be accompanied by a statement by the applicant, assignee, or an attorney/agent registered to practice before the Office explaining how the materiality standard is met. 5) A statement that applicant will agree to make an election without traverse in a telephonic interview if a restriction requirement is made by the examiner. 6) The petition to make special must be filed electronically. 7) The petition must be filed at least one day prior to the date that a first Office Action appears in the Patent Application Information Retrieval (PAIR) system. 8) The petition must be accompanied by a request for early publication in compliance with 37 CFR 1.219 and include the publication fee as set forth in 37 CFR 1.18(d).

The requirement for a fee for consideration of the petition to make special for applications pertaining to Green Technologies has been waived.

The instant petition complies with items 1 – 8 above. Accordingly, the above-identified application has been accorded "special" status.

Telephone inquires concerning this decision should be directed to Manjunath Rao at 571-272-0939.

The application is being forwarded to the Technology Center Art Unit 1656 for action on the merits commensurate with this decision.

/Manjunath Rao/

Manjunath Rao
Supervisory Patent Examiner &
POC for TC 1600 Green Tech Petitions
Technology Center 1600

UNITED STATES PATENT AND TRADEMARK OFFICE

Commissioner for Patents
United States Patent and Trademark Office
P.O. Box 1450
Alexandria, VA 22313-1450
www.uspto.gov

SPRINKLE IP LAW GROUP / ZIMMER
1301 W. 25TH STREET
SUITE 408
AUSTIN, TX 78705

MAILED

MAR 06 2012

OFFICE OF PETITIONS

In re Application of
Raul Villa, et al.
Application No. 13/099,995
Filed: May 3, 2011
Attorney Docket No. ZIMM1470-1

DECISION ON PETITION
TO WITHDRAW
FROM RECORD

This is a decision on the Request to Withdraw as attorney or agent of record under 37 C.F.R. § 1.36(b), filed February 24, 2012.

The request is **DISMISSED** as moot.

A review of the file record indicates that the power of attorney to Sprinkle IP Law Group / Zimmer has been revoked by the assignee of the patent application on February 21, 2012. Accordingly, the request to withdraw under 37 C.F.R. § 1.36(b) is moot.

All future communications from the Office will continue to be directed to the below-listed address until otherwise notified by applicant.

Telephone inquires concerning this decision should be directed to undersigned at 571-272-1642.

/AMW/
April M. Wise
Petitions Examiner
Office of Petitions

UNITED STATES PATENT AND TRADEMARK OFFICE

Commissioner for Patents
United States Patent and Trademark Office
P.O. Box 1450
Alexandria, VA 22313-1450
www.uspto.gov

PATTERSON & SHERIDAN, L.L.P.
3040 POST OAK BOULEVARD
SUITE 1500
HOUSTON, TX 77056

MAILED
MAR 26 2012
OFFICE OF PETITIONS

In re Application of
Hiroaki Inoue
Application No.: 13/100,008
Filed: May 3, 2011
Attorney Docket No.: TOSH/0231US
For: MAGNETIC DISK DRIVE AND REFRESH METHOD FOR THE SAME

: DECISION ON REQUEST TO
: PARTICIPATE IN THE PATENT
: PROSECUTION HIGHWAY
: PROGRAM AND PETITION
: TO MAKE SPECIAL UNDER
: 37 CFR 1.102(a)

This is a decision on the request to participate in the Patent Prosecution Highway (PPH) program and the petition under 37 CFR 1.102(a), filed February 8, 2012, to make the above-identified application special.

The request and petition are **GRANTED**.

Discussion

A grantable request to participate in the PPH pilot program and petition to make special require:

1. The U.S. application is

    a. a Paris Convention application which either
        i. validly claims priority under 35 U.S.C. 119(a) and 37 CFR 1.55 to one or more applications filed in the JPO, or
        ii. validly claims priority to a PCT application that contains no priority claims, or
    b. a national stage application under the PCT (an application which entered the national stage in the U.S. from a PCT international application after compliance with 35 U.S.C. 371), which PCT application
        i. validly claims priority to an application filed in the JPO, or
        ii. validly claims priority to a PCT application that contains no priority claims, or
        iii. contains no priority claim, or
    c. a so-called bypass application filed under 35 U.S.C. 111(a) which validly claims benefit under 35 U.S.C. 120 to a PCT application, which PCT application
        i. validly claims priority to an application filed in the JPO, or

ii. validly claims priority to a PCT application that contains no priority claims, or
iii. contains no priority claim;

2. Applicant must submit a copy of:
   a. The allowable/patentable claim(s) from the JPO application(s);
   b. An English translation of the allowable/patentable claim(s) and
   c. A statement that the English translation is accurate;
3. Applicant must:
   a. Ensure all the claims in the U.S. application must sufficiently correspond or be amended to sufficiently correspond to the allowable/patentable claim(s) in the JPO application(s) and
   b. Submit a claims correspondence table in English;
4. Examination of the U.S. application has not begun;
5. Applicant must submit:
   a. Documentation of prior office action:
      i. a copy of the office action(s) just prior to the "Decision to Grant a Patent" from each of the JPO application(s) containing the allowable/patentable claim(s) or
      ii. if the allowable/patentable claims(s) are from a "Notification of Reasons for Refusal" then the Notification of Reasons for Refusal or
      iii. if the JPO application is a first action allowance then no office action from the JPO is necessary should be indicated on the request/petition form;
   b. An English language translation of the JPO Office action from (5)(a)(i)-(ii) above
   c. A statement that the English translation is accurate;
6. Applicant must submit:
   a. An IDS listing the documents cited by the JPO examiner in the JPO office action (unless already submitted in this application)
   b. Copies of the documents except U.S. patents or U.S. patent application publications (unless already submitted in this application);

The request to participate in the PPH pilot program and petition comply with the above requirements. Accordingly, the above-identified application has been accorded "special" status.

Inquiries concerning this decision should be directed to the undersigned at (571) 272-3226. All other inquiries concerning the examination or status of the application is accessible in the PAIR system at http://www.uspto.gov/ebc.index.html.

This application will be forwarded to the examiner for action on the merits commensurate with this decision.

/Andrea Smith/
Andrea Smith
Petitions Examiner
Office of Petitions

UNITED STATES PATENT AND TRADEMARK OFFICE

Commissioner for Patents
United States Patent and Trademark Office
P.O. Box 1450
Alexandria, VA 22313-1450
www.uspto.gov

IPxLAW Group, LLP
95 South Market Street
Suite 570
San Jose, CA 95113

MAILED

MAY 24 2011

OFFICE OF PETITIONS

In re Application of :
Ebrahim Abedifard, et. al. :
Application No. 13/100,048 :DECISION ON PETITION
Filed: May 3, 2011 :TO MAKE SPECIAL UNDER
Attorney Docket No. AVALANCHE-0052US : 37 CFR 1.102(c)(1)

This is a decision on the petition under 37 CFR 1.102(c)(1), filed May 3, 2011, to make the above-identified application special based on applicant's age as set forth in MPEP § 708.02, Section IV.

The petition is **GRANTED**.

A grantable petition to make an application special under 37 CFR 1.102(c)(1) and MPEP § 708.02, Section IV: Applicant's Age must be accompanied by evidence showing that at least one of the applicants is 65 years of age, or more, such as a birth certificate or a statement by applicant. No fee is required.

The instant petition includes a statement from joint inventor, Parviz Keshtbod, that he is 65 years of age or older. Accordingly, the above-identified application has been accorded "special" status.

This application file is being referred to the Office of Patent Application Processing for further processing in accordance with this decision.

Telephone inquiries concerning this decision should be directed to the undersigned at (571) 272-3226. All other inquiries concerning the processing of the application should be addressed to the Office of Patent Application Processing at (571) 272-4000.

Andrea Smith
Petitions Examiner
Office of Petitions

UNITED STATES PATENT AND TRADEMARK OFFICE

Commissioner for Patents
United States Patent and Trademark Office
P.O. Box 1450
Alexandria, VA 22313-1450
www.uspto.gov

MAILED

MAY 18 2011

OFFICE OF PETITIONS

STOUT, UXA, BUYAN & MULLINS LLP
4 VENTURE, SUITE 300
IRVINE CA 92618

In re Application of :
Frank J. Uxa Jr. :
Application No. 13/100,088 : DECISION ON PETITION
Filed: May 3, 2011 : TO MAKE SPECIAL UNDER
Attorney Docket No. **D-3322** : 37 CFR 1.102(c)(1)
:

This is a decision on the petition under 37 CFR 1.102(c)(1), filed May 4, 2011, to make the above-identified application special based on applicant's age as set forth in MPEP § 708.02, Section IV.

The petition is **GRANTED**.

A grantable petition to make an application special under 37 CFR 1.102(c)(1) and MPEP § 708.02, Section IV: Applicant's Age must be accompanied by evidence showing that at least one of the applicants is 65 years of age, or more, such as a birth certificate or a statement by applicant. No fee is required

The instant petition includes a statement by a registered attorney. Accordingly, the above-identified application has been accorded "special" status.

Telephone inquiries concerning this decision should be directed to JoAnne Burke at 571-272-4584.

All other inquiries concerning either the examination or status of the application should be directed to the Technology Center.

The application is being forwarded to the Office of Patent Application Processing (OPAP) for action on the merits commensurate with this decision.

JoAnne Burke
Petitions Examiner
Office of Petitions

UNITED STATES PATENT AND TRADEMARK OFFICE

UNITED STATES DEPARTMENT OF COMMERCE
United States Patent and Trademark Office
Address: COMMISSIONER FOR PATENTS
P.O. Box 1450
Alexandria, Virginia 22313-1450
www.uspto.gov

APPLICATION NO.	FILING DATE	FIRST NAMED INVENTOR	ATTORNEY DOCKET NO.	CONFIRMATION NO.
13/100,091	05/03/2011	Lei Miao	HW 0815115AE	2170

74365 7590 08/05/2011

Slater & Matsil, L.L.P.
17950 Preston Road, Suite 1000
Dallas, TX 75252

EXAMINER	
DORVIL, RICHEMOND	

ART UNIT	PAPER NUMBER
2626	

NOTIFICATION DATE	DELIVERY MODE
08/05/2011	ELECTRONIC

Please find below and/or attached an Office communication concerning this application or proceeding.

The time period for reply, if any, is set in the attached communication.

Notice of the Office communication was sent electronically on above-indicated "Notification Date" to the following e-mail address(es):

docketing@slater-matsil.com

UNITED STATES PATENT AND TRADEMARK OFFICE

Commissioner for Patents
United States Patent and Trademark Office
P.O. Box 1450
Alexandria, VA 22313-1450
www.uspto.gov

Slater & Matsil, L.L.P.
17950 Preston Road, Suite 1000
Dallas TX 75252

In re Application of: **MIAO, LEI** et al.
Serial No.: **13/100,091**
Filed: **May 3, 2011**
Attorney Docket Number: **HW 0815115AE**
Title: **METHODS, APPARATUSES AND SYSTEM FOR ENCODING AND DECODING SIGNAL**

DECISION ON PETITION TO MAKE SPECIAL FOR NEW APPLICATION UNDER 37 C.F.R. § 1.102 & M.P.E.P. § 708.02

This is a decision on the petition filed on May 3, 2011 requesting to make the above-identified application special for accelerated examination procedure under 37 C.F.R. § 1.102(d).

The petition to make the application special is **GRANTED**.

The application is eligible for accelerated examination and the petition complies with the conditions for granting the application special status pursuant to the "Change to Practice for Petitions in Patent Applications to Make Special and for Accelerated Examination" published June 26, 2006, in the Federal Register. (71 Fed. Reg. 36323).

The prosecution of the instant application will be conducted expeditiously according to the following guidelines.

1. The application will be docketed to an examiner and taken up for action within two weeks of the date of this decision.

2. Restriction Practice:
   If the examiner determines that the claims are not directed to a single invention, a telephone request to elect one single invention will be made pursuant to MPEP 812.01. As a prerequisite to the grant of this petition, the applicant has agreed to make an oral election, by telephone, without traverse. If the applicant refuses to make an election without traverse, or the examiner cannot reach the applicant after a reasonable effort, the examiner will treat the first claimed invention (invention defined by claim 1) as having being constructively elected without traverse for examination.

3. Office action:
   If it is determined that, after appropriate consultation, there is a potential rejection or any other issue to be addressed, the examiner will telephone the applicant and arrange an interview to discuss and resolve the issue. An Office action, other than a Notice of

Allowance and Fee(s) Due (Notice of Allowance), will not be issued unless either: 1) an interview was conducted but did not result in agreed to action that places the application in condition for allowance, or, 2) a determination is made that an interview would be unlikely to result in the application being placed in condition for allowance, and 3) an internal conference has been held to review any rejection of any claim.

4. Time for Reply:
An Office action other than a Notice of Allowance or a final Office action will set a shortened statutory period of one month or thirty days, whichever is longer, for reply with no extension of time available under 37 CFR 1.136(a). Failure to timely file a reply within this non-extendible period for reply will result in the abandonment of the application.

5. Reply by Applicant:
A timely reply to an Office action other than the Notice of Allowance must be submitted electronically via EFS or EFS-web and limited to addressing the rejections, objections and requirement made. Any amendment that attempts to: 1) add claims which would result in more than three pending independent claims or more than twenty pending total claims; 2) present claims not encompassed by the pre-examination search or an updated accelerated examination support document; or 3) present claims that are directed a non-elected invention or an invention other than that previously claimed and examined in the application, will be treated as not fully responsive and will not be entered.

For any amendment to the claims (including any new claim) that is not encompassed by the accelerated examination support document, applicant must provide an updated accelerated examination support document that encompasses the amended or new claims at the time of filing of the amendment.

To proceed expeditiously with the examination, it is recommended that a reply with amendments made to any claim or with any new claim being added be accompanied by an updated accelerated examination support document or a statement explaining how the amended or new claim is supported by the original accelerated examination support document.

6. Information Disclosure Statement (IDS):
Any IDS filed during prosecution must be submitted electronically via EFS or EFS-web, accompanied by an updated accelerated examination support document, and be in compliance with 37 CFR 1.97 and 1.98.

7. Post-Allowance Processing:
To expedite processing of the allowed application into a patent, the applicant must: 1) pay the required fees within one month of the date of the Notice of Allowance, and 2) not file any post allowance papers not required by the Office. In no event may the issue fee be paid and accepted later than three months from the date of the Notice of Allowance.

8. After-Final and Appeal Procedures:

To expedite prosecution, after receiving the final Office action, applicant must: 1) promptly file a notice of appeal, an appeal brief and appeal fees; and 2) not request a pre-appeal brief conference.

Any amendment, affidavit or other evidence filed after final Office action must comply with applicable rules and the requirements outlined in numbered paragraphs 5 and 6 above.

On appeal, the application will proceed according to normal appeal procedures. After appeal, the application will again be treated special.

9. Proceedings Outside the Normal Examination Process:
   If the application becomes involved in a proceeding that is outside the normal examination process (e.g., a secrecy order, national security review, interference proceeding, petitions under 37 CFR 1.181, 182 or 183), the application will be treated special before and after such proceeding.

10. Final Disposition:
    The twelve month goal of this accelerated examination procedure ends with a final disposition. The mailing of a final Office action, a Notice of Allowance, the filing of a Notice of Appeal, or the filing of a Request for Continued Examination (RCE) is the final disposition.

If, during prosecution, a paper is not filed electronically using EFS-web, a reply is filed but is not fully responsive, the application is involved in an appeal, or a proceeding outside normal examination process, the application will still be examined expeditiously, however, the final disposition may occur more than twelve months from the filing of the application.

Any inquiry regarding this decision should be directed to Daniel Swerdlow, Quality Assurance Specialist, at (571) 272-7531.

/Daniel Swerdlow/

Daniel Swerdlow
Quality Assurance Specialist
Technology Center 2600
Communications

UNITED STATES PATENT AND TRADEMARK OFFICE

Commissioner for Patents
United States Patent and Trademark Office
P.O. Box 1450
Alexandria, VA 22313-1450
www.uspto.gov

WAGNER, ANDERSON & BRIGHT, PC
3541 OCEAN VIEW BLVD
GLENDALE CA 91208

MAILED

JUN 06 2011

OFFICE OF PETITIONS

In re Application of :
Jacob Y. Wong :
Application No. 13/100,223 : DECISION ON PETITION
Filed: May 3, 2011 : TO MAKE SPECIAL UNDER
Attorney Docket No. RLA 35.156A : 37 CFR 1.102(c)(1)
:

This is a decision on the petition under 37 CFR 1.102(c)(1), filed May 3, 2011, to make the above-identified application special based on applicant's age as set forth in M.P.E.P. § 708.02, Section IV.

The petition is **GRANTED**.

A grantable petition to make an application special under 37 CFR 1.102(c)(1) and MPEP § 708.02, Section IV: Applicant's Age must be accompanied by evidence showing that at least one of the applicants is 65 years of age, or more, such as a birth certificate or a statement by applicant. No fee is required

The instant petition includes a statement from the applicant declaring that he is 65 years of age or older. Accordingly, the above-identified application has been accorded "special" status.

Telephone inquiries concerning this decision should be directed to Terri Johnson at 571-272-2991.

All other inquiries concerning either the examination or status of the application should be directed to the Technology Center.

The application is being forwarded to the Technology Center Art Unit 2884 for action on the merits commensurate with this decision.

/Terri Johnson/
Terri Johnson
Petitions Examiner
Office of Petitions

Doc Code: PET.GREEN
Document Description: Petition for Green Tech Pilot

PTO/SB/420 (11-10)
Approved for use through 01/31/2011. OMB 0651-0062
U.S. Patent and Trademark Office; U. S. DEPARTMENT OF COMMERCE
Under the Paperwork Reduction Act of 1995, no persons are required to respond to a collection of information unless it displays a valid OMB control number.

PETITION TO MAKE SPECIAL UNDER THE GREEN TECHNOLOGY PILOT PROGRAM

Attorney Docket Number: PTE-P-101-3P-9C	Application Number (if known):	Filing date: May 3, 2011
First Named Inventor: Louis Lerman		
Title: Solid State Light Sheet Having Wide Support Substrate and Narrow Strips Enclosing LED Dies In Series		

APPLICANT HEREBY REQUESTS TO PARTICIPATE IN THE GREEN TECHNOLOGY PILOT PROGRAM FOR THE ABOVE-IDENTIFIED APPLICATION. See Instruction Sheet on page 2.

This petition must be timely filed electronically using the USPTO electronic filing system, EFS-Web.

1. By filing this petition:

   Applicant is requesting early publication: Applicant hereby requests early publication under 37 CFR 1.219 and the publication fee set forth in 37 CFR 1.18(d) accompanies this request.

2. By filing this petition: applicant is agreeing to make an election without traverse in a telephonic interview and elect an invention that meets the eligibility requirements for the Green Technology Pilot Program, if the Office determines that the claims are not obviously directed to a single invention. See Instruction Sheet.

3. This request is accompanied by statements of special status for the eligibility requirement.

4. The application contains no more than three (3) independent claims and twenty (20) total claims.

5. The application does not contain any multiple dependent claims.

6. Other attachments: Description of why invention qualifies under program by conserving energy

Signature /Brian D Ogonowsky/	Date May 3, 2011
Name (Print/Typed) Brian D. Ogonowsky	Registration Number 31,988

Note: *Signatures of all the inventors or assignees of record of the entire interest or their representative(s) are required in accordance with 37 CFR 1.33 and 11.18. Please see 37 CFR 1.4(d) for the form of the signature. If necessary, submit multiple forms for more than one signature see below*.*

☒ *Total of 1 forms are submitted.

The information is required to obtain or retain a benefit by the public which is to file (and by the USPTO to process) an application. Confidentiality is governed by 35 U.S.C. 122 and 37 CFR 1.11 and 1.14. This collection is estimated to take 12 hours to complete, including gathering, preparing, and submitting the completed application form to the USPTO. Time will vary depending upon the individual case. Any comments on the amount of time you require to complete this form and/or suggestions for reducing this burden, should be sent to the Chief Information Officer, U.S. Patent and Trademark Office, U.S. Department of Commerce, P.O. Box 1450, Alexandria, VA 22313-1450. DO NOT SEND FEES OR COMPLETED FORMS TO THIS ADDRESS. **SEND TO: Commissioner for Patents, P.O. Box 1450, Alexandria, VA 22313-1450.**

If you need assistance in completing the form, call 1-800-PTO-9199 and select option 2.

IN THE UNITED STATES PATENT AND TRADEMARK OFFICE

Applicants:	Louis Lerman, Allan Brent York, Michael David Henry, Robert Steele, Brian D. Ogonowsky		
Assignee:	Quarkstar, LLC		
Title:	Solid State Light Sheet Having Wide Support Substrate and Narrow Strips Enclosing LED Dies In Series		
Serial No.:	Filed herewith	Filing Date:	May 3, 2011
Examiner:	Not yet assigned	Group Art Unit:	Not yet assigned
Docket No.:	PTE-P-101-3P-9C	Confirmation No.:	

San Jose, California
May 3, 2011

Mail Stop Petition
Commissioner for Patents
P.O. Box 1450
Alexandria, VA 23313-1450

PETITION TO MAKE SPECIAL UNDER GREEN TECHNOLOGY PILOT PROGRAM

Dear Commissioner:

A completed form PTO/SB/420 is enclosed herewith requesting that the above-identified application be accepted for the Green Technology Pilot Program for accelerated examination. The below statement provides the additional information requested to qualify for the Program.

The application is a regular utility application filed under 35 USC 111(a).

The application contains three or fewer independent claims and 20 or fewer total claims. The application contains no multiple dependent claims.

Applicants request early publication under 37 CFR 1.219, and the publication fee accompanies this request.

PATENT LAW GROUP LLP
2635 N. FIRST ST.
SUITE 223
SAN JOSE, CA 95134
(408) 382-0480
FAX (408) 382-0481

The patent application relates to a solid state light sheet or strip, containing many LEDs in series, that may be used to replace the standard 2x4 foot fluorescent fixtures found

in almost every office building or replace incandescent bulbs. The yearly market for such conventional lamps in the United States is billions of units. The inventors have invented the first practical light sheet or strip that is cost-effective enough to be a viable replacement for the standard 2x4 foot fluorescent fixtures or incandescent bulbs. The increased energy efficiency of the light sheets/strips is part of the cost-effectiveness calculation. Furthermore, fluorescent lamps contain mercury, which requires special disposal procedures that add to the energy costs. As described below, the total energy savings by companies in America using the light sheet are extremely high.

LED lighting has the potential to dramatically reduce energy consumption in the United States due to its much higher efficiency with respect to conventional light sources such as incandescent, halogen and fluorescent lamps. A study commissioned by DOE in 2009 (Navigant Consulting, February 2010) estimated that demand for fluorescent lighting in commercial applications in 2010 is approximately 22,000 teralumen-hours (2.2×10^{16} lumen-hours), with projected growth to approximately 25,000 teralumen-hours in 2020. Average fluorescent lamp efficacy is estimated by the study at 71 lm/W in 2010, increasing to 75 lm/W in 2020. Assuming an average troffer efficiency of 75% (ranges from 65% in the DOE CALiPER test noted above to 85% for high-efficiency T5 troffers), the average efficacy for fluorescent troffers would be 53 lm/W in 2010 and 56 lm/W in 2020. Based on DOE estimates of efficacy improvements in white LEDs between 2010 and 2020, the luminous efficacy of the LED lightsheet should reach113 lm/W by 2015, and 153 lm/W by 2020.

Assuming a projected demand for commercial fluorescent-type lighting of 25,000 teralumen-hours in 2020, a market penetration of 20% of the installed base of fluorescent troffers by LED light sheets in that year would result in a reduction of electricity demand of 52 terawatt-hours per year. This is the amount of electricity produced annually by eight 1,000-MW power plants. The reduction in primary energy (coal, oil, gas, etc.) consumption would be 0.56 quads (0.56×10^{15} Btu) in 2020.

The claims, all directed to LED lighting devices, are broader than a solid light sheet that can be used to replace a 2x4 troffer, and the claimed structures/methods can be used to replace virtually any non-solid state light while being more efficient.

PATENT LAW
GROUP LLP
2635 N. FIRST ST.
SUITE 223
SAN JOSE, CA 95134
(408) 382-0480
FAX (408) 382-0481

If there are any questions, please call the undersigned at (408) 382-0480 ex202.

Certificate of Electronic Transmission

I hereby certify that this correspondence is being submitted electronically to the United States Patent and Trademark Office on the date shown below.

/Brian D Ogonowsky/	May 3, 2011
Attorney for Applicant(s)	Date

Respectfully submitted,

/Brian D Ogonowsky/

Brian D Ogonowsky
Attorney for Applicant(s)
Reg. No. 31,988

PATENT LAW GROUP LLP
2635 N. FIRST ST.
SUITE 223
SAN JOSE, CA 95134
(408) 382-0480
FAX (408) 382-0481

UNITED STATES PATENT AND TRADEMARK OFFICE

UNITED STATES DEPARTMENT OF COMMERCE
United States Patent and Trademark Office
Address: COMMISSIONER FOR PATENTS
P.O. Box 1450
Alexandria, Virginia 22313-1450
www.uspto.gov

APPLICATION NO.	FILING DATE	FIRST NAMED INVENTOR	ATTORNEY DOCKET NO.	CONFIRMATION NO.
13/100,231	05/03/2011	Louis Lerman	PTE-P-101-3P-9C	2468

32566 7590 06/14/2011

PATENT LAW GROUP LLP
2635 NORTH FIRST STREET
SUITE 223
SAN JOSE, CA 95134

EXAMINER	
ART UNIT	PAPER NUMBER
2811	

MAIL DATE	DELIVERY MODE
06/14/2011	PAPER

Please find below and/or attached an Office communication concerning this application or proceeding.

The time period for reply, if any, is set in the attached communication.

UNITED STATES PATENT AND TRADEMARK OFFICE

Commissioner for Patents
United States Patent and Trademark Office
P.O. Box 1450
Alexandria, VA 22313-1450
www.uspto.gov

PATENT LAW GROUP LLP
2635 NORTH FIRST STREET
SUITE 223
SAN JOSE CA 95134

In re Application of	:	
LERMAN et al.	:	DECISION ON PETITION
Application No. 13/100,231	:	TO MAKE SPECIAL UNDER
Filed: May 03, 2011	:	THE GREEN TECHNOLOGY
Attorney PTE-P-101-3P-9C	:	PILOT PROGRAM

This is a decision on the petition under 37 CFR 1.102, filed on May 03, 2011, to make the above-identified application special under the pilot program for applications pertaining to Green Technologies as set forth 74 Federal Register Notice 64666 (December 8, 2009) and amended by 75 Federal Register Notice 28554 (May 21, 2010) and 75 Federal Register Notice 69049 (November 10, 2010).

The petition is **GRANTED**.

A grantable petition to make an application special under 37 CFR 1.102 and the pilot program as set forth in 74 FR 64666 must be directed to a nonprovisional application filed under 35 USC 111(a) or be a national stage entry under 35 USC 371, exclusive of any reissue applications.

In order to qualify for special status, the following requirements must be met. 1) The application must have no more than 3 independent claims and no more than 20 total claims. 2) The application must not contain any multiple dependent claims. 3) The petition must state the basis for seeking special status, i.e., the claimed invention either: A) materially enhances the quality of the environment or B) materially contributes to: i) the discovery or development of renewable energy resources, ii) the more efficient utilization and conservation of energy resources, or iii) greenhouse gas emission reduction. 4) If the disclosure is not clear on its face that the claimed invention materially contributes under category (A) or (B), the petition must be accompanied by a statement by the applicant, assignee, or an attorney/agent registered to practice before the Office explaining how the materiality standard is met. 5) A statement that applicant will agree to make an election without traverse in a telephonic interview if a restriction requirement is made by the examiner. 6) The petition to make special must be filed electronically. 7) The petition must be filed at least one day prior to the date that a first Office Action appears in the Patent Application Information Retrieval (PAIR) system. 8) The petition must be accompanied by a request for early publication in compliance with 37 CFR 1.219 and include the publication fee as set forth in 37 CFR 1.18(d).

The requirement for a fee for consideration of the petition to make special for applications pertaining to Green Technologies has been waived.

The instant petition complies with items 1 – 8 above. Accordingly, the above-identified application has been accorded "special" status.

Telephone inquires concerning this decision should be directed to Lee W. Young at 571-272-4549.

The application is being forwarded to the Technology Center Art Unit 2811 for action on the merits commensurate with this decision.

Lee W. Young
Quality Assurance Specialist
Technology Center 2800

Doc Code: PET.GREEN
Document Description: Petition for Green Tech Pilot

PTO/SB/420 (11-10)
Approved for use through 01/31/2011. OMB 0651-0062
U.S. Patent and Trademark Office; U. S. DEPARTMENT OF COMMERCE
Under the Paperwork Reduction Act of 1995, no persons are required to respond to a collection of information unless it displays a valid OMB control number.

PETITION TO MAKE SPECIAL UNDER THE GREEN TECHNOLOGY PILOT PROGRAM

Attorney Docket Number: PTE-P-101-3P-5C	Application Number (if known):	Filing date: May 3, 2011
First Named Inventor: Louis Lerman		
Title: Solid State Light Sheet or Strip Having Cavities Formed in Top Substrate		

APPLICANT HEREBY REQUESTS TO PARTICIPATE IN THE GREEN TECHNOLOGY PILOT PROGRAM FOR THE ABOVE-IDENTIFIED APPLICATION. See Instruction Sheet on page 2.

This petition must be timely filed electronically using the USPTO electronic filing system, EFS-Web.

1. By filing this petition:

   Applicant is requesting early publication: Applicant hereby requests early publication under 37 CFR 1.219 and the publication fee set forth in 37 CFR 1.18(d) accompanies this request.

2. By filing this petition: applicant is agreeing to make an election without traverse in a telephonic interview and elect an invention that meets the eligibility requirements for the Green Technology Pilot Program, if the Office determines that the claims are not obviously directed to a single invention. See Instruction Sheet.

3. This request is accompanied by statements of special status for the eligibility requirement.

4. The application contains no more than three (3) independent claims and twenty (20) total claims.

5. The application does not contain any multiple dependent claims.

6. Other attachments: Description of why invention qualifies under program by conserving energy

Signature /Brian D Ogonowsky/	Date May 3, 2011
Name (Print/Typed) Brian D. Ogonowsky	Registration Number 31,988

Note: *Signatures of all the inventors or assignees of record of the entire interest or their representative(s) are required in accordance with 37 CFR 1.33 and 11.18. Please see 37 CFR 1.4(d) for the form of the signature. If necessary, submit multiple forms for more than one signature see below*.*

☒ *Total of 1 forms are submitted.

The information is required to obtain or retain a benefit by the public which is to file (and by the USPTO to process) an application. Confidentiality is governed by 35 U.S.C. 122 and 37 CFR 1.11 and 1.14. This collection is estimated to take 12 hours to complete, including gathering, preparing, and submitting the completed application form to the USPTO. Time will vary depending upon the individual case. Any comments on the amount of time you require to complete this form and/or suggestions for reducing this burden, should be sent to the Chief Information Officer, U.S. Patent and Trademark Office, U.S. Department of Commerce, P.O. Box 1450, Alexandria, VA 22313-1450. DO NOT SEND FEES OR COMPLETED FORMS TO THIS ADDRESS. **SEND TO: Commissioner for Patents, P.O. Box 1450, Alexandria, VA 22313-1450.**

If you need assistance in completing the form, call 1-800-PTO-9199 and select option 2.

IN THE UNITED STATES PATENT AND TRADEMARK OFFICE

Applicants:	Louis Lerman, Allan Brent York, Michael David Henry, Robert Steele, Brian D. Ogonowsky		
Assignee:	Quarkstar, LLC		
Title:	Solid State Light Sheet or Strip Having Cavities Formed in Top Substrate		
Serial No.:	Filed herewith	Filing Date:	May 3, 2011
Examiner:	Not yet assigned	Group Art Unit:	Not yet assigned
Docket No.:	PTE-P-101-3P-5C	Confirmation No.:	

San Jose, California
May 3, 2011

Mail Stop Petition
Commissioner for Patents
P.O. Box 1450
Alexandria, VA 23313-1450

PETITION TO MAKE SPECIAL UNDER GREEN TECHNOLOGY PILOT PROGRAM

Dear Commissioner:

A completed form PTO/SB/420 is enclosed herewith requesting that the above-identified application be accepted for the Green Technology Pilot Program for accelerated examination. The below statement provides the additional information requested to qualify for the Program.

The application is a regular utility application filed under 35 USC 111(a).

The application contains three or fewer independent claims and 20 or fewer total claims. The application contains no multiple dependent claims.

Applicants request early publication under 37 CFR 1.219, and the publication fee accompanies this request.

PATENT LAW GROUP LLP
2635 N. FIRST ST.
SUITE 223
SAN JOSE, CA 95134
(408) 382-0480
FAX (408) 382-0481

The patent application relates to a solid state light sheet or strip, containing many LEDs in series, that may be used to replace the standard 2x4 foot fluorescent fixtures found

in almost every office building or replace incandescent bulbs. The yearly market for such conventional lamps in the United States is billions of units. The inventors have invented the first practical light sheet or strip that is cost-effective enough to be a viable replacement for the standard 2x4 foot fluorescent fixtures or incandescent bulbs. The increased energy efficiency of the light sheets/strips is part of the cost-effectiveness calculation. Furthermore, fluorescent lamps contain mercury, which requires special disposal procedures that add to the energy costs. As described below, the total energy savings by companies in America using the light sheet are extremely high.

LED lighting has the potential to dramatically reduce energy consumption in the United States due to its much higher efficiency with respect to conventional light sources such as incandescent, halogen and fluorescent lamps. A study commissioned by DOE in 2009 (Navigant Consulting, February 2010) estimated that demand for fluorescent lighting in commercial applications in 2010 is approximately 22,000 teralumen-hours (2.2×10^{16} lumen-hours), with projected growth to approximately 25,000 teralumen-hours in 2020. Average fluorescent lamp efficacy is estimated by the study at 71 lm/W in 2010, increasing to 75 lm/W in 2020. Assuming an average troffer efficiency of 75% (ranges from 65% in the DOE CALiPER test noted above to 85% for high-efficiency T5 troffers), the average efficacy for fluorescent troffers would be 53 lm/W in 2010 and 56 lm/W in 2020. Based on DOE estimates of efficacy improvements in white LEDs between 2010 and 2020, the luminous efficacy of the LED lightsheet should reach113 lm/W by 2015, and 153 lm/W by 2020.

Assuming a projected demand for commercial fluorescent-type lighting of 25,000 teralumen-hours in 2020, a market penetration of 20% of the installed base of fluorescent troffers by LED light sheets in that year would result in a reduction of electricity demand of 52 terawatt-hours per year. This is the amount of electricity produced annually by eight 1,000-MW power plants. The reduction in primary energy (coal, oil, gas, etc.) consumption would be 0.56 quads (0.56×10^{15} Btu) in 2020.

The claims, all directed to LED lighting devices, are broader than a solid light sheet that can be used to replace a 2x4 troffer, and the claimed structures/methods can be used to replace virtually any non-solid state light while being more efficient.

PATENT LAW
GROUP LLP
2635 N. FIRST ST.
SUITE 223
SAN JOSE, CA 95134
(408) 382-0480
FAX (408) 382-0481

If there are any questions, please call the undersigned at (408) 382-0480 ex202.

Certificate of Electronic Transmission

I hereby certify that this correspondence is being submitted electronically to the United States Patent and Trademark Office on the date shown below.

/Brian D Ogonowsky/	May 3, 2011
Attorney for Applicant(s)	Date

Respectfully submitted,

/Brian D Ogonowsky/

Brian D Ogonowsky
Attorney for Applicant(s)
Reg. No. 31,988

PATENT LAW GROUP LLP
2635 N. FIRST ST.
SUITE 223
SAN JOSE, CA 95134
(408) 382-0480
FAX (408) 382-0481

UNITED STATES PATENT AND TRADEMARK OFFICE

UNITED STATES DEPARTMENT OF COMMERCE
United States Patent and Trademark Office
Address: COMMISSIONER FOR PATENTS
P.O. Box 1450
Alexandria, Virginia 22313-1450
www.uspto.gov

APPLICATION NO.	FILING DATE	FIRST NAMED INVENTOR	ATTORNEY DOCKET NO.	CONFIRMATION NO.
13/100,247	05/03/2011	Louis Lerman	PTE-P-101-3P-5C	2501

32566 7590 06/14/2011

PATENT LAW GROUP LLP
2635 NORTH FIRST STREET
SUITE 223
SAN JOSE, CA 95134

EXAMINER	
GURLEY, LYNNE ANN	
ART UNIT	**PAPER NUMBER**
2811	

MAIL DATE	DELIVERY MODE
06/14/2011	PAPER

Please find below and/or attached an Office communication concerning this application or proceeding.

The time period for reply, if any, is set in the attached communication.

UNITED STATES PATENT AND TRADEMARK OFFICE

Commissioner for Patents
United States Patent and Trademark Office
P.O. Box 1450
Alexandria, VA 22313-1450
www.uspto.gov

PATENT LAW GROUP LLP
2635 NORTH FIRST STREET
SUITE 223
SAN JOSE CA 95134

In re Application of	:	
LERMAN et al.	:	DECISION ON PETITION
Application No. 13/100,247	:	TO MAKE SPECIAL UNDER
Filed: May 03, 2011	:	THE GREEN TECHNOLOGY
Attorney PTE-P-101-3P-5C	:	PILOT PROGRAM

This is a decision on the petition under 37 CFR 1.102, filed on May 03, 2011, to make the above-identified application special under the pilot program for applications pertaining to Green Technologies as set forth 74 Federal Register Notice 64666 (December 8, 2009) and amended by 75 Federal Register Notice 28554 (May 21, 2010) and 75 Federal Register Notice 69049 (November 10, 2010).

The petition is **GRANTED**.

A grantable petition to make an application special under 37 CFR 1.102 and the pilot program as set forth in 74 FR 64666 must be directed to a nonprovisional application filed under 35 USC 111(a) or be a national stage entry under 35 USC 371, exclusive of any reissue applications.

In order to qualify for special status, the following requirements must be met. 1) The application must have no more than 3 independent claims and no more than 20 total claims. 2) The application must not contain any multiple dependent claims. 3) The petition must state the basis for seeking special status, i.e., the claimed invention either: A) materially enhances the quality of the environment or B) materially contributes to: i) the discovery or development of renewable energy resources, ii) the more efficient utilization and conservation of energy resources, or iii) greenhouse gas emission reduction. 4) If the disclosure is not clear on its face that the claimed invention materially contributes under category (A) or (B), the petition must be accompanied by a statement by the applicant, assignee, or an attorney/agent registered to practice before the Office explaining how the materiality standard is met. 5) A statement that applicant will agree to make an election without traverse in a telephonic interview if a restriction requirement is made by the examiner. 6) The petition to make special must be filed electronically. 7) The petition must be filed at least one day prior to the date that a first Office Action appears in the Patent Application Information Retrieval (PAIR) system. 8) The petition must be accompanied by a request for early publication in compliance with 37 CFR 1.219 and include the publication fee as set forth in 37 CFR 1.18(d).

The requirement for a fee for consideration of the petition to make special for applications pertaining to Green Technologies has been waived.

The instant petition complies with items 1 – 8 above. Accordingly, the above-identified application has been accorded "special" status.

Telephone inquires concerning this decision should be directed to Lee W. Young at 571-272-4549.

The application is being forwarded to the Technology Center Art Unit 2811 for action on the merits commensurate with this decision.

Lee W. Young
Quality Assurance Specialist
Technology Center 2800

IN THE UNITED STATES PATENT AND TRADEMARK OFFICE

Applicants	:	Robert Zubrin, et al.
Docket No.	:	RZ-013
Serial No.	:	Not Yet Assigned
For	:	Methods for generating electricity from carbonaceous material with substantially no carbon dioxide emissions
Filed	:	Concurrently Herewith

GREEN TECH PILOT PROGRAM

STATEMENT IN SUPPORT OF SPECIAL STATUS

Commissioner for Patents
P.O. Box 1450
Alexandria, VA 22313-1450

Dear Sir:

Applicants are hereby submitting that the present application relates to greenhouse gas reduction in order to meet the requirements of the Green Tech Pilot Program. As stated in section III of the Notice, Applicants must also provide a statement pertaining to the materiality standard if the application disclosure is not clear on its face as to the basis for the special status of the invention.

The invention relates to "systems and methods for generating electricity from carbonaceous material with substantially no carbon dioxide emissions." More specifically, paragraph 2 of the Specification states that "this invention relates to a system and method for generating "green electricity" having substantially zero or very low CO_2 emissions from a carbonaceous feedstock."

In addition, this application is a Divisional of U.S. Serial No. 12/565,308, which was granted Special Status under the Green Tech Pilot Program and has been allowed for issuance into a patent.

Accordingly, Applicants respectfully request grant of the Green Tech Pilot Special Status Petition and a speedy examination of this application on the merits.

Sincerely yours,

American Patent Agency PC

By: _____

Daniar Hussain
Registration No. 59,026
(617) 899-9709

Doc Code: PET.GREEN
Document Description: Petition for Green Tech Pilot

PTO/SB/420 (03-11)

PETITION TO MAKE SPECIAL UNDER THE GREEN TECHNOLOGY PILOT PROGRAM

Attorney Docket Number: RZ-013	Application Number (if known):	Filing date: Concurrently

First Named Inventor: Robert Zubrin, et al.

Title: METHODS FOR GENERATING ELECTRICITY FROM CARBONACEOUS MATERIAL WITH SUBSTANTIALLY NO CARBON DIOXIDE EMISSIONS

APPLICANT HEREBY REQUESTS TO PARTICIPATE IN THE GREEN TECHNOLOGY PILOT PROGRAM FOR THE ABOVE-IDENTIFIED APPLICATION. See Instruction Sheet on page 2.

This petition must be timely filed electronically using the USPTO electronic filing system, EFS-Web.

1. By filing this petition:

   Applicant is requesting early publication: Applicant hereby requests early publication under 37 CFR 1.219 and the publication fee set forth in 37 CFR 1.18(d) accompanies this request.

2. By filing this petition: applicant is agreeing to make an election without traverse in a telephonic interview and elect an invention that meets the eligibility requirements for the Green Technology Pilot Program, if the Office determines that the claims are not obviously directed to a single invention. See Instruction Sheet.

3. This request is accompanied by statements of special status for the eligibility requirement.

4. The application contains no more than three (3) independent claims and twenty (20) total claims.

5. The application does not contain any multiple dependent claims.

6. Other attachments: _____

Signature /Daniar Hussain/	Date April 24, 2011
Name (Print/Typed) Daniar Hussain	Registration Number 59,026

Note: *Signatures of all the inventors or assignees of record of the entire interest or their representative(s) are required in accordance with 37 CFR 1.33 and 11.18. Please see 37 CFR 1.4(d) for the form of the signature. If necessary, submit multiple forms for more than one signature, see below*.*

■ *Total of 1 forms are submitted.

If you need assistance in completing the form, call 1-800-PTO-9199 and select option 2.

Instruction Sheet for
Petition to Make Special Under the Green Technology Pilot Program

(Not to be Submitted to the USPTO)

The following is a summary of the requirements (for more information see the notices (i) "Pilot Program for Green Technologies Including Greenhouse Gas Reduction," (ii) "Elimination of Classification Requirement in the Green Technology Pilot Program," and (iii) "Expansion and Extension of the Green Technology Pilot Program," available on the USPTO web site at http://www.uspto.gov/patents/init_events/green_tech.jsp):

(1) The application must be a non-reissue, non-provisional utility application filed under 35 U.S.C. 111(a), or an international application that has entered the national stage in compliance with 35 U.S.C. 371, irrespective of the filing date of the application. Reexamination proceedings are excluded from this pilot program.

(2) The application must contain three or fewer independent claims and twenty or fewer total claims. The application must not contain any multiple dependent claims. For an application that contains more than three independent claims or twenty total claims, or multiple dependent claims, applicant must file a preliminary amendment in compliance with 37 CFR 1.121 to cancel the excess claims and/or the multiple dependent claims at the time the petition to make special is filed.

(3) The claims must be directed to a single invention that materially enhances the quality of the environment, or that materially contributes to: (1) the discovery or development of renewable energy resources; (2) the more efficient utilization and conservation of energy resources; or (3) green house gas emission reduction (see the eligibility requirements of sections II and III of the notice (i) cited above). The petition must include a statement that, if the USPTO determines that the claims are directed to multiple inventions (e.g., in a restriction requirement), applicant will agree to make an election without traverse in a telephonic interview, and elect an invention that meets the eligibility requirements in section II or III of the notice (i) cited above.

(4) The petition to make special must be timely filed electronically using the USPTO electronic filing system, EFS-Web, and selecting the document description of "Petition for Green Tech Pilot" on the EFS-Web screen. Applicant should use form PTO/SB/420, which is available as a Portable Document Format (PDF) fillable form in EFS-Web and on the USPTO Web site.

(5) The petition to make special must be filed at least one day prior to the date that a first Office action (which may be an Office action containing only a restriction requirement) appears in the Patent Application Information Retrieval (PAIR) system. Applicant may check the status of the application using PAIR.

(6) The petition to make special must be accompanied by a request for early publication in compliance with 37 CFR 1.219 and the publication fee set forth in 37 CFR 1.18(d).

Privacy Act Statement

The **Privacy Act of 1974 (P.L. 93-579)** requires that you be given certain information in connection with your submission of the attached form related to a patent application or patent. Accordingly, pursuant to the requirements of the Act, please be advised that: (1) the general authority for the collection of this information is 35 U.S.C. 2(b)(2); (2) furnishing of the information solicited is voluntary; and (3) the principal purpose for which the information is used by the U.S. Patent and Trademark Office is to process and/or examine your submission related to a patent application or patent. If you do not furnish the requested information, the U.S. Patent and Trademark Office may not be able to process and/or examine your submission, which may result in termination of proceedings or abandonment of the application or expiration of the patent.

The information provided by you in this form will be subject to the following routine uses:

1. The information on this form will be treated confidentially to the extent allowed under the Freedom of Information Act (5 U.S.C. 552) and the Privacy Act (5 U.S.C 552a). Records from this system of records may be disclosed to the Department of Justice to determine whether disclosure of these records is required by the Freedom of Information Act.
2. A record from this system of records may be disclosed, as a routine use, in the course of presenting evidence to a court, magistrate, or administrative tribunal, including disclosures to opposing counsel in the course of settlement negotiations.
3. A record in this system of records may be disclosed, as a routine use, to a Member of Congress submitting a request involving an individual, to whom the record pertains, when the individual has requested assistance from the Member with respect to the subject matter of the record.
4. A record in this system of records may be disclosed, as a routine use, to a contractor of the Agency having need for the information in order to perform a contract. Recipients of information shall be required to comply with the requirements of the Privacy Act of 1974, as amended, pursuant to 5 U.S.C. 552a(m).
5. A record related to an International Application filed under the Patent Cooperation Treaty in this system of records may be disclosed, as a routine use, to the International Bureau of the World Intellectual Property Organization, pursuant to the Patent Cooperation Treaty.
6. A record in this system of records may be disclosed, as a routine use, to another federal agency for purposes of National Security review (35 U.S.C. 181) and for review pursuant to the Atomic Energy Act (42 U.S.C. 218(c)).
7. A record from this system of records may be disclosed, as a routine use, to the Administrator, General Services, or his/her designee, during an inspection of records conducted by GSA as part of that agency's responsibility to recommend improvements in records management practices and programs, under authority of 44 U.S.C. 2904 and 2906. Such disclosure shall be made in accordance with the GSA regulations governing inspection of records for this purpose, and any other relevant (*i.e.*, GSA or Commerce) directive. Such disclosure shall not be used to make determinations about individuals.
8. A record from this system of records may be disclosed, as a routine use, to the public after either publication of the application pursuant to 35 U.S.C. 122(b) or issuance of a patent pursuant to 35 U.S.C. 151. Further, a record may be disclosed, subject to the limitations of 37 CFR 1.14, as a routine use, to the public if the record was filed in an application which became abandoned or in which the proceedings were terminated and which application is referenced by either a published application, an application open to public inspection or an issued patent.
9. A record from this system of records may be disclosed, as a routine use, to a Federal, State, or local law enforcement agency, if the USPTO becomes aware of a violation or potential violation of law or regulation.

UNITED STATES PATENT AND TRADEMARK OFFICE

UNITED STATES DEPARTMENT OF COMMERCE
United States Patent and Trademark Office
Address: COMMISSIONER FOR PATENTS
P.O. Box 1450
Alexandria, Virginia 22313-1450
www.uspto.gov

APPLICATION NO.	FILING DATE	FIRST NAMED INVENTOR	ATTORNEY DOCKET NO.	CONFIRMATION NO.
13/100,274	05/03/2011	Robert M. Zubrin	RZ-013	2556

65513 7590 06/15/2011

American Patent Agency PC
230 N Craig Street
Unit 605
Pittsburgh, PA 15213

EXAMINER	
ART UNIT	PAPER NUMBER
3741	

NOTIFICATION DATE	DELIVERY MODE
06/15/2011	ELECTRONIC

Please find below and/or attached an Office communication concerning this application or proceeding.

The time period for reply, if any, is set in the attached communication.

Notice of the Office communication was sent electronically on above-indicated "Notification Date" to the following e-mail address(es):

company@american-patent-agency.com
dan@apvusa.com
albert@apvusa.com

UNITED STATES PATENT AND TRADEMARK OFFICE

Commissioner for Patents
United States Patent and Trademark Office
P.O. Box 1450
Alexandria, VA 22313-1450
www.uspto.gov

American Patent Agency PC
230 N Craig Street
Unit 605
Pittsburgh PA 15213

In re Application of
ZUBRIN, ROBERT M.
Application No. 13/100274
Filed: May 3, 2011
Attorney Docket No. RZ-013

: DECISION ON PETITION
: TO MAKE SPECIAL UNDER
: THE GREEN TECHNOLOGY
: PILOT PROGRAM

This is a decision on the petition under 37 CFR 1.102, filed May 3, 2011, to make the above-identified application special under the pilot program for applications pertaining to Green Technologies as set forth in 74 Federal Register Notice 64666 (December 8, 2009) and amended by 75 Federal Register Notice 28554 (May 21, 2010) and 75 Federal Register Notice 69049 (November 10, 2010).

The petition is **granted**.

A grantable petition to make an application special under 37 CFR 1.102 and the pilot program as set forth in 74 FR 64666 must be directed to a nonprovisional application filed under 35 USC 111(a) or be a national stage entry under 35 USC 371, exclusive of any reissue applications.

If reconsideration of this decision is desired, a petition for reconsideration must be filed within ONE (1) MONTH OR THIRTY (30) DAYS from the mail date of this decision, whichever is longer. No extension of this time limit can be granted under 37 CFR 1.136(a) or (b). The petition for reconsideration should include an exhaustive attempt to provide the lacking item(s) noted below, since, after a decision on the petition for reconsideration, no further reconsideration or review of the matter will be undertaken by the Director.

In order to qualify for special status, the following requirements must be met. 1) The application must have no more than 3 independent claims and no more than 20 total claims. 2) The application must not contain any multiple dependent claims. 3) The petition must state the basis for seeking special status, i.e., the claimed invention either: A) materially enhances the quality of the environment or B) materially contributes to: i) the discovery or development of renewable

energy resources, ii) the more efficient utilization and conservation of energy resources, or iii) greenhouse gas emission reduction. 4) If the disclosure is not clear on its face that the claimed invention materially contributes under category (A) or (B), the petition must be accompanied by a statement by the applicant, assignee, or an attorney/agent registered to practice before the Office explaining how the materiality standard is met. 5) A statement that applicant will agree to make an election without traverse in a telephonic interview if a restriction requirement is made by the examiner. 6) The petition to make special must be filed electronically. 7) The petition must be filed at least one day prior to the date that a first Office Action appears in the Patent Application Information Retrieval (PAIR) system. 8) The petition must be accompanied by a request for early publication in compliance with 37 CFR 1.219 and include the publication fee as set forth in 37 CFR 1.18(d).

The requirement for a fee for consideration of the petition to make special for applications pertaining to Green Technologies has been waived.

The instant petition complies with items 1 – 8 above. Accordingly, the above-identified application has been accorded "special" status.

Telephone inquires concerning this decision should be directed to Henry C. Yuen at 571-272-4856.

This application will be forwarded to the Technology Center Art Unit 3741 for action on the merits commensurate with this decision.

/Henry C. Yuen/

Henry C. Yuen
Quality Assurance Specialist
Technology Center TC 3700

Doc Code: PET.GREEN
Document Description: Petition for Green Tech Pilot

PTO/SB/420 (03-11)

PETITION TO MAKE SPECIAL UNDER THE GREEN TECHNOLOGY PILOT PROGRAM

Attorney Docket Number: P3730US00	Application Number (if known):	Filing date: 05/03/2011

First Named Inventor: Ziyang GAO

Title: SELF-POWERED IMPULSE DETECTION SYSTEM

APPLICANT HEREBY REQUESTS TO PARTICIPATE IN THE GREEN TECHNOLOGY PILOT PROGRAM FOR THE ABOVE-IDENTIFIED APPLICATION. See Instruction Sheet on page 2.

This petition must be timely filed electronically using the USPTO electronic filing system, EFS-Web.

1. By filing this petition:

   Applicant is requesting early publication: Applicant hereby requests early publication under 37 CFR 1.219 and the publication fee set forth in 37 CFR 1.18(d) accompanies this request.

2. By filing this petition: applicant is agreeing to make an election without traverse in a telephonic interview and elect an invention that meets the eligibility requirements for the Green Technology Pilot Program, if the Office determines that the claims are not obviously directed to a single invention. See Instruction Sheet.

3. This request is accompanied by statements of special status for the eligibility requirement.

4. The application contains no more than three (3) independent claims and twenty (20) total claims.

5. The application does not contain any multiple dependent claims.

6. Other attachments: _____

Signature /Sam T. Yip/	Date 05/03/2011
Name (Print/Typed) Sam T. Yip	Registration Number 62,099

Note: *Signatures of all the inventors or assignees of record of the entire interest or their representative(s) are required in accordance with 37 CFR 1.33 and 11.18. Please see 37 CFR 1.4(d) for the form of the signature. If necessary, submit multiple forms for more than one signature, see below*.*

■ *Total of 1 forms are submitted.

If you need assistance in completing the form, call 1-800-PTO-9199 and select option 2.

Instruction Sheet for
Petition to Make Special Under the Green Technology Pilot Program

(Not to be Submitted to the USPTO)

The following is a summary of the requirements (for more information see the notices (i) "Pilot Program for Green Technologies Including Greenhouse Gas Reduction," (ii) "Elimination of Classification Requirement in the Green Technology Pilot Program," and (iii) "Expansion and Extension of the Green Technology Pilot Program," available on the USPTO web site at http://www.uspto.gov/patents/init_events/green_tech.jsp):

(1) The application must be a non-reissue, non-provisional utility application filed under 35 U.S.C. 111(a), or an international application that has entered the national stage in compliance with 35 U.S.C. 371, irrespective of the filing date of the application. Reexamination proceedings are excluded from this pilot program.

(2) The application must contain three or fewer independent claims and twenty or fewer total claims. The application must not contain any multiple dependent claims. For an application that contains more than three independent claims or twenty total claims, or multiple dependent claims, applicant must file a preliminary amendment in compliance with 37 CFR 1.121 to cancel the excess claims and/or the multiple dependent claims at the time the petition to make special is filed.

(3) The claims must be directed to a single invention that materially enhances the quality of the environment, or that materially contributes to: (1) the discovery or development of renewable energy resources; (2) the more efficient utilization and conservation of energy resources; or (3) green house gas emission reduction (see the eligibility requirements of sections II and III of the notice (i) cited above). The petition must include a statement that, if the USPTO determines that the claims are directed to multiple inventions (e.g., in a restriction requirement), applicant will agree to make an election without traverse in a telephonic interview, and elect an invention that meets the eligibility requirements in section II or III of the notice (i) cited above.

(4) The petition to make special must be timely filed electronically using the USPTO electronic filing system, EFS-Web, and selecting the document description of "Petition for Green Tech Pilot" on the EFS-Web screen. Applicant should use form PTO/SB/420, which is available as a Portable Document Format (PDF) fillable form in EFS-Web and on the USPTO Web site.

(5) The petition to make special must be filed at least one day prior to the date that a first Office action (which may be an Office action containing only a restriction requirement) appears in the Patent Application Information Retrieval (PAIR) system. Applicant may check the status of the application using PAIR.

(6) The petition to make special must be accompanied by a request for early publication in compliance with 37 CFR 1.219 and the publication fee set forth in 37 CFR 1.18(d).

Privacy Act Statement

The **Privacy Act of 1974 (P.L. 93-579)** requires that you be given certain information in connection with your submission of the attached form related to a patent application or patent. Accordingly, pursuant to the requirements of the Act, please be advised that: (1) the general authority for the collection of this information is 35 U.S.C. 2(b)(2); (2) furnishing of the information solicited is voluntary; and (3) the principal purpose for which the information is used by the U.S. Patent and Trademark Office is to process and/or examine your submission related to a patent application or patent. If you do not furnish the requested information, the U.S. Patent and Trademark Office may not be able to process and/or examine your submission, which may result in termination of proceedings or abandonment of the application or expiration of the patent.

The information provided by you in this form will be subject to the following routine uses:

1. The information on this form will be treated confidentially to the extent allowed under the Freedom of Information Act (5 U.S.C. 552) and the Privacy Act (5 U.S.C 552a). Records from this system of records may be disclosed to the Department of Justice to determine whether disclosure of these records is required by the Freedom of Information Act.
2. A record from this system of records may be disclosed, as a routine use, in the course of presenting evidence to a court, magistrate, or administrative tribunal, including disclosures to opposing counsel in the course of settlement negotiations.
3. A record in this system of records may be disclosed, as a routine use, to a Member of Congress submitting a request involving an individual, to whom the record pertains, when the individual has requested assistance from the Member with respect to the subject matter of the record.
4. A record in this system of records may be disclosed, as a routine use, to a contractor of the Agency having need for the information in order to perform a contract. Recipients of information shall be required to comply with the requirements of the Privacy Act of 1974, as amended, pursuant to 5 U.S.C. 552a(m).
5. A record related to an International Application filed under the Patent Cooperation Treaty in this system of records may be disclosed, as a routine use, to the International Bureau of the World Intellectual Property Organization, pursuant to the Patent Cooperation Treaty.
6. A record in this system of records may be disclosed, as a routine use, to another federal agency for purposes of National Security review (35 U.S.C. 181) and for review pursuant to the Atomic Energy Act (42 U.S.C. 218(c)).
7. A record from this system of records may be disclosed, as a routine use, to the Administrator, General Services, or his/her designee, during an inspection of records conducted by GSA as part of that agency's responsibility to recommend improvements in records management practices and programs, under authority of 44 U.S.C. 2904 and 2906. Such disclosure shall be made in accordance with the GSA regulations governing inspection of records for this purpose, and any other relevant (*i.e.*, GSA or Commerce) directive. Such disclosure shall not be used to make determinations about individuals.
8. A record from this system of records may be disclosed, as a routine use, to the public after either publication of the application pursuant to 35 U.S.C. 122(b) or issuance of a patent pursuant to 35 U.S.C. 151. Further, a record may be disclosed, subject to the limitations of 37 CFR 1.14, as a routine use, to the public if the record was filed in an application which became abandoned or in which the proceedings were terminated and which application is referenced by either a published application, an application open to public inspection or an issued patent.
9. A record from this system of records may be disclosed, as a routine use, to a Federal, State, or local law enforcement agency, if the USPTO becomes aware of a violation or potential violation of law or regulation.

IN THE UNITED STATES PATENT AND TRADEMARK OFFICE

In re Application Inventor(s): Ziyang Gao, et al. Title: SELF-POWERED IMPULSE DETECTING SYSTEM	PATENT APPLICATION Attorney Docket No. P3730US00 **Customer No. 95527**

STATEMENT OF SPECIAL STATUS FOR GREEN TECHNOLOGY PILOT PROGRAM

Mail Stop Green Pilot Program
Honorable Commissioner for Patents
P.O. Box 1450
Alexandria, VA 22313-1450

Dear Sir:

The present invention is directed to technology that qualifies for special status under the Green Technology Pilot Program. In the present application, disclosed is an electrical power source of a device based on piezoelectric material that generates electricity by harvesting physical impact energy of an external force.

Physical impacts commonly exist in the daily life such as knocking and closing of doors and stepping on grounds. The presently disclosed electrical power source is a type of energy harvester that converts mechanical ambient energy of such physical impacts, which could otherwise be wasted, into electricity, which can be used for specific purposes. Therefore, by relieving reliance on conventional electricity power source such as fossil fuel based electricity generator, it helps reducing carbon emission.

In an energy-harvesting device, the energy conversion efficiency is a critical issue. An embodiment in the present application utilizes a plurality of bender elements with different resonant frequencies to broaden the overall response bandwidth of the energy-harvesting system. In a further embodiment, spring elements are used to reduce the system's overall damping effect. The use of these techniques results in the improvement in energy conversion efficiency. Consequently, broader applications of the presently disclosed electrical power source can be found and lesser reliance on carbon emitting power source is possible.

In view of the foregoing remarks, it is respectfully submitted that the present application should be accorded special status. Early and favorable action is respectfully requested.

Respectfully submitted,

Date: May 3, 2011

By: /Sam T. Yip/

Sam T. Yip
Registration No. 62,099
Attorney for Applicants

Customer No.: 95527
ELLA CHEONG
5001 Hopewell Centre
183 Queen's Road East
Wan Chai
Hong Kong
Telephone: +(852) 2810 0558
Fax: +(852) 2810 0933

UNITED STATES PATENT AND TRADEMARK OFFICE

UNITED STATES DEPARTMENT OF COMMERCE
United States Patent and Trademark Office
Address: COMMISSIONER FOR PATENTS
P.O. Box 1450
Alexandria, Virginia 22313-1450
www.uspto.gov

APPLICATION NO.	FILING DATE	FIRST NAMED INVENTOR	ATTORNEY DOCKET NO.	CONFIRMATION NO.
13/100,295	05/03/2011	Ziyang Gao	P3730US00	2589

95527 7590 06/30/2011

Ella Cheong Hong Kong
5001 Hopewell Centre, 183 Queen's Road East,
Wan Chai,
HONG KONG

EXAMINER	
ART UNIT	PAPER NUMBER
2837	

NOTIFICATION DATE	DELIVERY MODE
06/30/2011	ELECTRONIC

Please find below and/or attached an Office communication concerning this application or proceeding.

The time period for reply, if any, is set in the attached communication.

Notice of the Office communication was sent electronically on above-indicated "Notification Date" to the following e-mail address(es):

mburke@ellacheong.com
syip@ellacheong.com
ewong@ellacheong.com

UNITED STATES PATENT AND TRADEMARK OFFICE

Commissioner for Patents
United States Patent and Trademark Office
P.O. Box 1450
Alexandria, VA 22313-1450
www.uspto.gov

Ella Cheong Hong Kong
5001 Hopewell Centre, 183 Queen's Road East,
Wan Chai HK HONG KONG

In re Application of	:	
GAO et al.	:	DECISION ON PETITION
Application No. 13/100,295	:	TO MAKE SPECIAL UNDER
Filed: May 03, 2011	:	THE GREEN TECHNOLOGY
Attorney Docket No. P3730US00	:	PILOT PROGRAM

This is a decision on the petition under 37 CFR 1.102, filed on May 03, 2011, to make the above-identified application special under the pilot program for applications pertaining to Green Technologies as set forth 74 Federal Register Notice 64666 (December 8, 2009) and amended by 75 Federal Register Notice 28554 (May 21, 2010) and 75 Federal Register Notice 69049 (November 10, 2010).

The petition is **DISMISSED**.

If reconsideration of this decision is desired, a petition for reconsideration must be filed within ONE (1) MONTH OR THIRTY (30) DAYS from the mail date of this decision, whichever is longer. No extension of this time limit can be granted under 37 CFR 1.136(a) or (b). The petition for reconsideration should include an exhaustive attempt to provide the lacking item(s) noted below, since, after a decision on the petition for reconsideration, no further reconsideration or review of the matter will be undertaken by the Director.

A grantable petition to make an application special under 37 CFR 1.102 and the pilot program as set forth in 74 FR 64666 must be directed to a nonprovisional application filed under 35 USC 111(a) or be a national stage entry under 35 USC 371, exclusive of any reissue applications and be filed prior to the date of the notice, December 8, 2009.

In order to qualify for special status, the following requirements must be met. 1) The application must have no more than 3 independent claims and no more than 20 total claims. 2) The application must not contain any multiple dependent claims. 3) The petition must state the basis for seeking special status, i.e., the claimed invention either: A) materially enhances the quality of the environment or B) materially contributes to: i) the discovery or development of renewable energy resources, ii) the more efficient utilization and conservation of energy resources, or iii) greenhouse gas emission reduction. 4) If the disclosure is not clear on its face that the claimed invention materially contributes under category (A) or (B), the petition must be accompanied by a statement by the applicant, assignee, or an attorney/agent registered to practice before the Office explaining how the materiality standard is met. 5) A statement that applicant will agree to

make an election without traverse in a telephonic interview if a restriction requirement is made by the examiner. 6) The petition to make special must be filed electronically. 7) The petition must be filed at least one day prior to the date that a first Office Action appears in the Patent Application Information Retrieval (PAIR) system. 8) The petition must be accompanied by a request for early publication in compliance with 37 CFR 1.219 and include the publication fee as set forth in 37 CFR 1.18(d).

The requirement for a fee for consideration of the petition to make special for applications pertaining to Green Technologies has been waived.

The petition lacks item 4.

In regard to item 4, applicant's statement pertaining to how the materiality standard is met does not satisfy the requirements for this pilot. The petition alleges that the claimed invention contributes to reduced carbon emission and more efficient utilization and conservation of energy. The materiality standard does not permit an applicant to speculate as to how a hypothetical end-user might specially apply the invention in a manner that could contribute to greenhouse gas emission reduction. Any argument that the claimed invention can be used to reduce greenhouse gas emission is considered speculate as to how a hypothetical end-user might specially apply the claimed invention. It is not readily apparent how using piezoelectric energy harvesting results in more efficient utilization of energy resources (which is required for basis B ii above).

Any reconsideration of this decision should be submitted through the USPTO electronic filing system, EFS-Web, and selecting the document description of "Petition for Green Tech Pilot" on the EFS-Web screen.

Telephone inquiries concerning this decision should be directed to Lee W. Young at 571-272-4549.

The application is being forwarded to the Technology Center Art Unit 2837 for action in its regular turn.

Lee W. Young
Quality Assurance Specialist
Technology Center 2600

IN THE UNITED STATES PATENT AND TRADEMARK OFFICE

In re Application Inventor(s): Ziyang Gao, et al. Title: SELF-POWERED IMPULSE DETECTING SYSTEM	PATENT APPLICATION Attorney Docket No. P3730US00 **Customer No. 95527**

PARTITION FOR RECONSIDERATION TO MAKE SPECIAL UNDER THE GREEN TECHNOLOGY PILOT PROGRAM UNDER 37 CFR 1.102

Mail Stop Green Pilot Program
Honorable Commissioner for Patents
P.O. Box 1450
Alexandria, VA 22313-1450

Attn: Lee W. Young
Quality Assurance Specialist
Technology Center 2600

Dear Sir:

This is a response to the Decision on Petition to Make Special Under the Green Technology Pilot Program mailed on June 30, 2011.

In the Decision mailed on June 30, 2011, the Officer stated that the petition filed on May 3, 2011 failed to address that the invention either:

A) materially enhances the quality of the environment; or

B) materially contributes to:

i. the discovery or development of renewable energy resources,

ii. the more efficient utilization and conservation of energy resources, or

iii. greenhouse gas emission reduction.

Applicant respectful submitted that the present application discloses an invention that materially contributes to the development of renewable energy resources, thus satisfying the requirements for special status. Reconsideration of the decision on the petition is respectfully requested.

Invention Materially Contributes to the Development of Renewable Energy Resources:

Physical impacts commonly exist in the daily life such as knocking and closing of doors and stepping on grounds. The invention disclosed in the present application is a type of energy harvester that converts mechanical ambient energy of such physical impacts, which could otherwise be wasted, into electricity.

In an energy-harvesting device, energy conversion efficiency is a critical issue. One embodiment of the invention disclosed in the present application utilizes a plurality of piezoelectric bender elements with different resonant frequencies to broaden the overall response bandwidth of the energy-harvesting system. In a further embodiment, spring elements are used to reduce the system's overall damping effect. The incorporation of these features in an energy-harvesting device enhances its energy conversion efficiency. Since physical impacts generated by human activities are sources of renewable energy, by improving the energy conversion efficiency of a physical-impact-energy harvester that harvests from these sources of renewable energy to produce electricity, the invention disclosed in the present application contributes to the development of renewable energy resources.

In view of the foregoing remarks, it is respectfully submitted that the present application should be accorded special status. Early and favorable decision is respectfully requested.

Respectfully submitted,

Date: July 29, 2011

By: /Sam T. Yip/

Sam T. Yip
Registration No. 62,099
Attorney for Applicants

Customer No.: 95527
ELLA CHEONG
5001 Hopewell Centre
183 Queen's Road East
Wan Chai
Hong Kong
Telephone: +(852) 2810 0558
Fax: +(852) 2810 0933

UNITED STATES PATENT AND TRADEMARK OFFICE

UNITED STATES DEPARTMENT OF COMMERCE
United States Patent and Trademark Office
Address: COMMISSIONER FOR PATENTS
P.O. Box 1450
Alexandria, Virginia 22313-1450
www.uspto.gov

APPLICATION NO.	FILING DATE	FIRST NAMED INVENTOR	ATTORNEY DOCKET NO.	CONFIRMATION NO.
13/100,295	05/03/2011	Ziyang Gao	P3730US00	2589

95527 7590 08/19/2011

Ella Cheong Hong Kong
5001 Hopewell Centre, 183 Queen's Road East,
Wan Chai,
HONG KONG

EXAMINER	
BENSON, WALTER	

ART UNIT	PAPER NUMBER
2837	

NOTIFICATION DATE	DELIVERY MODE
08/19/2011	ELECTRONIC

Please find below and/or attached an Office communication concerning this application or proceeding.

The time period for reply, if any, is set in the attached communication.

Notice of the Office communication was sent electronically on above-indicated "Notification Date" to the following e-mail address(es):

mburke@ellacheong.com
syip@ellacheong.com
ewong@ellacheong.com

UNITED STATES PATENT AND TRADEMARK OFFICE

Commissioner for Patents
United States Patent and Trademark Office
P.O. Box 1450
Alexandria, VA 22313-1450
www.uspto.gov

Ella Cheong Hong Kong
5001 Hopewell Centre
183 Queen's Road East,
Wan Chai HK HONG KONG

AUG 19 2011

In re Application of :
Ziyang Gao et al. : DECISION ON PETITION
Application No. 13/100,295 : TO MAKE SPECIAL UNDER
Filed: May 03, 2011 : THE GREEN TECHNOLOGY
Attorney Docket No. P3730US00 : PILOT PROGRAM

This is a decision on the petition under 37 CFR 1.102, filed July 29, 2011, to make the above-identified application special under the pilot program for applications pertaining to Green Technologies as set forth in 74 Federal Register Notice 64666 (December 8, 2009) and amended by 75 Federal Register Notice 28554 (May 21, 2010) and 75 Federal Register Notice 69049 (November 10, 2010).

The petition is **GRANTED**.

A grantable petition to make an application special under 37 CFR 1.102 and the pilot program as set forth in 74 FR 64666 must be directed to a nonprovisional application filed under 35 USC 111(a) or be a national stage entry under 35 USC 371, exclusive of any reissue applications.

In order to qualify for special status, the following requirements must be met. 1) The application must have no more than 3 independent claims and no more than 20 total claims. 2) The application must not contain any multiple dependent claims. 3) The petition must state the basis for seeking special status, i.e., the claimed invention either: A) materially enhances the quality of the environment or B) materially contributes to: i) the discovery or development of renewable energy resources, ii) the more efficient utilization and conservation of energy resources, or iii) greenhouse gas emission reduction. 4) If the disclosure is not clear on its face that the claimed invention materially contributes under category (A) or (B), the petition must be accompanied by a statement by the applicant, assignee, or an attorney/agent registered to practice before the Office explaining how the materiality standard is met. 5) A statement that applicant will agree to make an election without traverse in a telephonic interview if a restriction requirement is made by the examiner. 6) The petition to make special must be filed electronically. 7) The petition must be filed at least one day prior to the date that a first Office Action appears in the Patent Application Information Retrieval (PAIR) system. 8) The petition must be accompanied by a request for early publication in compliance with 37 CFR 1.219 and include the publication fee as set forth in 37 CFR 1.18(d).

The requirement for a fee for consideration of the petition to make special for applications pertaining to Green Technologies has been waived.

The instant petition complies with items 1 – 8 above. Accordingly, the above-identified application has been accorded "special" status.

Telephone inquires concerning this decision should be directed to Blaine Copenheaver at 571-272-1156.

The application is being forwarded to the examiner for action on the merits commensurate with this decision.

/Blaine Copenheaver/

Blaine Copenheaver
Quality Assurance Specialist
Technology Center 1700

UNITED STATES PATENT AND TRADEMARK OFFICE

Commissioner for Patents
United States Patent and Trademark Office
P.O. Box 1450
Alexandria, VA 22313-1450
www.uspto.gov

In re Application of
Samuel Lax

Application No. 13100409

Filed:

Attorney Docket No. SALA-53678

:DECISION ON PETITION TO MAKE SPECIAL
:UNDER 37 CFR 1.102(c)(1)

This is a decision on the electronic petition under 37 CFR 1.102 (c)(1), filed 04-MAY-2011 to make the above-identified application special based on applicant's age as set forth in MPEP § 708.02, Section IV.

The petition is **GRANTED**.

A grantable petition to make an application special under 37 CFR 1.102(c)(1), MPEP § 708.02, Section IV: Applicant's Age must include a statement by applicant or a registered practitioner having evidence that applicant is at least 65 years of age. No fee is required.

Accordingly, the above-identified application has been accorded "special" status and will be taken up for action by the examiner upon the completion of all pre-examination processing.

Telephone inquiries concerning this electronic decision should be directed to the Electronic Business Center at 866-217-9197.

All other inquiries concerning either the examination or status of the application should be directed to the Technology Center.

Doc code : PET.OP.AGE
Description : Petition to make special based on Age/Health

PTO/SB/130 (07-09)
Approved for use through 07/31/2012. OMB 0651- 0031
U.S. Patent and Trademark Office; U.S. DEPARTMENT OF COMMERCE
Under the Paperwork Reduction Act of 1995, no persons are required to respond to a collection of information unless it contains a valid OMB control number

PETITION TO MAKE SPECIAL BASED ON AGE FOR ADVANCEMENT OF EXAMINATION UNDER 37 CFR 1.102(c)(1)

Application Information

Application Number	13100409	Confirmation Number	2890	Filing Date	2011-05-04
Attorney Docket Number (optional)	SALA-53678	Art Unit		Examiner	
First Named Inventor	Samuel Lax				
Title of Invention	SAFETY RAZOR				

Attention: Office of Petitions
An application may be made special for advancement of examination upon filing of a petition showing that the applicant is 65 years of age, or more. No fee is required with such a petition. See 37 CFR 1.102(c)(1) and MPEP 708.02 (IV).

APPLICANT HEREBY PETITIONS TO MAKE SPECIAL FOR ADVANCEMENT OF EXAMINATION IN THIS APPLICATION UNDER 37 CFR 1.102(c)(1) and MPEP 708.02 (IV) ON THE BASIS OF THE APPLICANT'S AGE.

A grantable petition requires one of the following items:
(1) Statement by one named inventor in the application that he/she is 65 years of age, or more; or
(2) Certification by a registered attorney/agent having evidence such as a birth certificate, passport, driver's license, etc. showing one named inventor in the application is 65 years of age, or more.

Name of Inventor who is 65 years of age, or older

Given Name	Middle Name	Family Name	Suffix
Samuel		Lax	

A signature of the applicant or representative is required in accordance with 37 CFR 1.33 and 10.18.
Please see 37 CFR 1.4(d) for the format of the signature.

Select (1) or (2) :

○ (1) I am an inventor in this application and I am 65 years of age, or more.

◉ (2) I am an attorney or agent registered to practice before the Patent and Trademark Office, and I certify that I am in possession of evidence, and will retain such in the application file record, showing that the inventor listed above is 65 years of age, or more.

Signature	/Scott W. Kelley, Reg. No. 30762/	Date (YYYY-MM-DD)	2011-05-04
Name	Scott W. Kelley	Registration Number	30762

PTO/SB/130 (07-09)
Approved for use through 07/31/2012. OMB 0651- 0031
U.S. Patent and Trademark Office; U.S. DEPARTMENT OF COMMERCE
Under the Paperwork Reduction Act of 1995, no persons are required to respond to a collection of information unless it contains a valid OMB control number

Privacy Act Statement

The Privacy Act of 1974 (P.L. 93-579) requires that you be given certain information in connection with your submission of the attached form related to a patent application or patent. Accordingly, pursuant to the requirements of the Act, please be advised that: (1) the general authority for the collection of this information is 35 U.S.C. 2(b)(2); (2) furnishing of the information solicited is voluntary; and (3) the principal purpose for which the information is used by the U.S. Patent and Trademark Office is to process and/or examine your submission related to a patent application or patent. If you do not furnish the requested information, the U.S. Patent and Trademark Office may not be able to process and/or examine your submission, which may result in termination of proceedings or abandonment of the application or expiration of the patent.

The information provided by you in this form will be subject to the following routine uses:

1. The information on this form will be treated confidentially to the extent allowed under the Freedom of Information Act (5 U.S.C. 552) and the Privacy Act (5 U.S.C. 552a). Records from this system of records may be disclosed to the Department of Justice to determine whether the Fr eedom of Information Act requires disclosure of these records.

2. A record from this system of records may be disclosed, as a routine use, in the course of presenting evidence to a court, magistrate, or administrative tribunal, including disclosures to opposing counsel in the course of settlement negotiations.

3. A record in this system of records may be disclosed, as a routine use, to a Member of Congress submitting a request involving an individual, to whom the record pertains, when the individual has requested assistance from the Member with respect to the subject matter of the record.

4. A record in this system of records may be disclosed, as a routine use, to a contractor of the Agency having need for the information in order to perform a contract. Recipients of information shall be required to comply with the requirements of the Privacy Act of 1974, as amended, pursuant to 5 U.S.C. 552a(m).

5. A record related to an International Application filed under the Patent Cooperation Treaty in this system of records may be disclosed, as a routine use, to the International Bureau of the World Intellectual Property Organization, pursuant to the Patent Cooperation Treaty.

6. A record in this system of records may be disclosed, as a routine use, to another federal agency for purposes of National Security review (35 U.S.C. 181) and for review pursuant to the Atomic Energy Act (42 U.S.C. 218(c)).

7. A record from this system of records may be disclosed, as a routine use, to the Administrator, General Services, or his/her designee, during an inspection of records conducted by GSA as part of that agency's responsibility to recommend improvements in records management practices and programs, under authority of 44 U.S.C. 2904 and 2906. Such disclosure shall be made in accordance with the GSA regulations governing inspection of records for this purpose, and any other relevant (i.e., GSA or Commerce) directive. Such disclosure shall not be used to make determinations about indivi duals.

8. A record from this system of records may be disclosed, as a routine use, to the public after either publication of the application pursuant to 35 U.S.C. 122(b) or issuance of a patent pursuant to 35 U.S.C. 151. Further, a record may be disclosed, subject to the limitations of 37 CFR 1.14, as a routine use, to the public if the record was filed in an application which became abandoned or in which the proceedings were terminated and which application is referenced by either a published application, an application open to public inspections or an issued patent.

9. A record from this system of records may be disclosed, as a routine use, to a Federal, State, or local law enforcement agency, if the USPTO becomes aware of a violation or potential violation of law or regulation.

Doc Code: PET.GREEN
Document Description: Petition for Green Tech Pilot

PTO/SB/420 (05-10)
Approved for use through 01/31/2011. OMB 0651-0062
U.S. Patent and Trademark Office; U. S. DEPARTMENT OF COMMERCE
Under the Paperwork Reduction Act of 1995, no persons are required to respond to a collection of information unless it displays a valid OMB control number.

PETITION TO MAKE SPECIAL UNDER THE GREEN TECHNOLOGY PILOT PROGRAM

Attorney Docket Number: O2-0795	Application Number (if known):	Filing date:

First Named Inventor: Ching-Chuan KUO

Title: CIRCUITS AND METHODS FOR DRIVING LIGHT SOURCES

APPLICANT HEREBY REQUESTS TO PARTICIPATE IN THE GREEN TECHNOLOGY PILOT PROGRAM FOR THE ABOVE-IDENTIFIED APPLICATION. See Instruction Sheet on page 2.

This petition must be timely filed electronically using the USPTO electronic filing system, EFS-Web.

1. By filing this petition:

   Applicant is requesting early publication: Applicant hereby requests early publication under 37 CFR 1.219 and the publication fee set forth in 37 CFR 1.18(d) accompanies this request.

2. By filing this petition: applicant is agreeing to make an election without traverse in a telephonic interview and elect an invention that meets the eligibility requirements set forth in the notice titled "Pilot Program for Green Technologies Including Greenhouse Gas Reduction," as modified by the notice titled "Elimination of Classification Requirement in the Green Technology Pilot Program," each of which was published in the Federal Register, if the Office determines that the claims are not obviously directed to a single invention.

3. This request is accompanied by statements of special status for the eligibility requirement.

4. The application contains no more than three (3) independent claims and twenty (20) total claims.

5. The application does not contain any multiple dependent claims.

6. Other attachments: _____

Signature /Yue Li/	Date 2011-05-04
Name (Print/Typed) Yue Li	Registration Number L0346

Note: *Signatures of all the inventors or assignees of record of the entire interest or their representative(s) are required in accordance with 37 CFR 1.33 and 11.18. Please see 37 CFR 1.4(d) for the form of the signature. If necessary, submit multiple forms for more than one signature, see below*.*

☐ *Total of _____ forms are submitted.

The information is required to obtain or retain a benefit by the public which is to file (and by the USPTO to process) an application. Confidentiality is governed by 35 U.S.C. 122 and 37 CFR 1.11 and 1.14. This collection is estimated to take 1 hour to complete, including gathering, preparing, and submitting the completed application form to the USPTO. Time will vary depending upon the individual case. Any comments on the amount of time you require to complete this form and/or suggestions for reducing this burden, should be sent to the Chief Information Officer, U.S. Patent and Trademark Office, U.S. Department of Commerce, P.O. Box 1450, Alexandria, VA 22313-1450. DO NOT SEND FEES OR COMPLETED FORMS TO THIS ADDRESS. **SEND TO: Commissioner for Patents, P.O. Box 1450, Alexandria, VA 22313-1450.**

If you need assistance in completing the form, call 1-800-PTO-9199 and select option 2.

PTO/SB/420 (05-10)
Approved for use through 01/31/2011. OMB 0651-0062
U.S. Patent and Trademark Office; U. S. DEPARTMENT OF COMMERCE
Under the Paperwork Reduction Act of 1995, no persons are required to respond to a collection of information unless it displays a valid OMB control number.

Instruction Sheet for Petition to Make Special Under the Green Technology Pilot Program

(Not to be Submitted to the USPTO)

***The following is a summary of the requirements** (for more information see the notices (i) "Pilot Program for Green Technologies Including Greenhouse Gas Reduction" and (ii) "Elimination of Classification Requirement in the Green Technology Pilot Program," available on the USPTO web site at http://www.uspto.gov/patents/init_events/green_tech.jsp):*

(1) The application must be a non-reissue, non-provisional utility application filed under 35 U.S.C. 111(a), or an international application that has entered the national stage in compliance with 35 U.S.C. 371. The application must be previously filed before the publication date of the notice cited above. Reexamination proceedings are excluded from this pilot program.

(2) The application must contain three or fewer independent claims and twenty or fewer total claims. The application must not contain any multiple dependent claims. For an application that contains more than three independent claims or twenty total claims, or multiple dependent claims, applicant must file a preliminary amendment in compliance with 37 CFR 1.121 to cancel the excess claims and/or the multiple dependent claims at the time the petition to make special is filed.

(3) The claims must be directed to a single invention that materially enhances the quality of the environment, or that materially contributes to: (1) the discovery or development of renewable energy resources; (2) the more efficient utilization and conservation of energy resources; or (3) green house gas emission reduction (see the eligibility requirements of sections II and III of the notice (i) cited above). The petition must include a statement that, if the USPTO determines that the claims are directed to multiple inventions (e.g., in a restriction requirement), applicant will agree to make an election without traverse in a telephonic interview, and elect an invention that meets the eligibility requirements in section II or III of the notice (i) cited above.

(4) The petition to make special must be timely filed electronically using the USPTO electronic filing system, EFS-Web, and selecting the document description of "Petition for Green Tech Pilot" on the EFS-Web screen. Applicant should use form PTO/SB/420, which is available as a Portable Document Format (PDF) fillable form in EFS-Web and on the USPTO Web site.

(5) The petition to make special must be filed at least one day prior to the date that a first Office action (which may be an Office action containing only a restriction requirement) appears in the Patent Application Information Retrieval (PAIR) system. Applicant may check the status of the application using PAIR.

(6) The petition to make special must be accompanied by a request for early publication in compliance with 37 CFR 1.219 and the publication fee set forth in 37 CFR 1.18(d).

Privacy Act Statement

The **Privacy Act of 1974 (P.L. 93-579)** requires that you be given certain information in connection with your submission of the attached form related to a patent application or patent. Accordingly, pursuant to the requirements of the Act, please be advised that: (1) the general authority for the collection of this information is 35 U.S.C. 2(b)(2); (2) furnishing of the information solicited is voluntary; and (3) the principal purpose for which the information is used by the U.S. Patent and Trademark Office is to process and/or examine your submission related to a patent application or patent. If you do not furnish the requested information, the U.S. Patent and Trademark Office may not be able to process and/or examine your submission, which may result in termination of proceedings or abandonment of the application or expiration of the patent.

The information provided by you in this form will be subject to the following routine uses:

1. The information on this form will be treated confidentially to the extent allowed under the Freedom of Information Act (5 U.S.C. 552) and the Privacy Act (5 U.S.C 552a). Records from this system of records may be disclosed to the Department of Justice to determine whether disclosure of these records is required by the Freedom of Information Act.
2. A record from this system of records may be disclosed, as a routine use, in the course of presenting evidence to a court, magistrate, or administrative tribunal, including disclosures to opposing counsel in the course of settlement negotiations.
3. A record in this system of records may be disclosed, as a routine use, to a Member of Congress submitting a request involving an individual, to whom the record pertains, when the individual has requested assistance from the Member with respect to the subject matter of the record.
4. A record in this system of records may be disclosed, as a routine use, to a contractor of the Agency having need for the information in order to perform a contract. Recipients of information shall be required to comply with the requirements of the Privacy Act of 1974, as amended, pursuant to 5 U.S.C. 552a(m).
5. A record related to an International Application filed under the Patent Cooperation Treaty in this system of records may be disclosed, as a routine use, to the International Bureau of the World Intellectual Property Organization, pursuant to the Patent Cooperation Treaty.
6. A record in this system of records may be disclosed, as a routine use, to another federal agency for purposes of National Security review (35 U.S.C. 181) and for review pursuant to the Atomic Energy Act (42 U.S.C. 218(c)).
7. A record from this system of records may be disclosed, as a routine use, to the Administrator, General Services, or his/her designee, during an inspection of records conducted by GSA as part of that agency's responsibility to recommend improvements in records management practices and programs, under authority of 44 U.S.C. 2904 and 2906. Such disclosure shall be made in accordance with the GSA regulations governing inspection of records for this purpose, and any other relevant (*i.e.*, GSA or Commerce) directive. Such disclosure shall not be used to make determinations about individuals.
8. A record from this system of records may be disclosed, as a routine use, to the public after either publication of the application pursuant to 35 U.S.C. 122(b) or issuance of a patent pursuant to 35 U.S.C. 151. Further, a record may be disclosed, subject to the limitations of 37 CFR 1.14, as a routine use, to the public if the record was filed in an application which became abandoned or in which the proceedings were terminated and which application is referenced by either a published application, an application open to public inspection or an issued patent.
9. A record from this system of records may be disclosed, as a routine use, to a Federal, State, or local law enforcement agency, if the USPTO becomes aware of a violation or potential violation of law or regulation.

IN THE UNITED STATES PATENT AND TRADEMARK OFFICE

Applicant: KUO, Ching-Chuan et al. Examiner:
Serial No.: Group Art Unit:
Filed: Docket: O2-0795
Confirmation No.:
Title: CIRCUITS AND METHODS FOR DRIVING LIGHT SOURCES

STATEMENT OF SPECIAL STATUS FOR PETITION TO MAKE SPECIAL UNDER THE GREEN TECHNOLOGY PILOT PROGRAM

Commissioner for Patents
P.O. Box 1450
Alexandria, VA 22313-1450

Dear Sir:

BASIS FOR SPECIAL STATUS

Special status under the Green Technology Pilot program is sought because the claimed subject matter of this Application materially contributes to the more efficient utilization and conservation of energy resources. Further, the claimed subject matter of this Application materially enhances the quality of the environment through energy conservation.

HOW THE MATERIALITY STANDARD IS MET

The claimed subject matter of this Application is directed to controller and driving circuit for driving a light-emitting diode (LED) light source, in various applications such as color and brightness control of the light output of the light source.

The controller and driving circuit materially reduce energy consumption by enabling relatively wide range of brightness adjustment of the light output of the LED light source, which is beneficial for energy-efficient light applications such as night light. Also, extra apparatus for light dimming, such as an external remote controller or a specially designed switch with adjusting buttons, is avoided to economize on energy and materials. Additionally, the claimed subject matter may be employed in industrial equipment, commercial equipment, and household appliances to materially contribute to the more efficient utilization and conservation of energy resources.

An example of a household appliance is an LED lamp. In an LED lamp, many LEDs are driven by a driving circuit to generate light output. In order to generate different color and different levels of light output, the claimed subject matter may be employed herein.

LEDs have a multitude of environmental advantages. Unlike incandescent and fluorescent bulbs, an LED light source does not utilize a filament or any type of luminary gas. LEDs contain no harmful chemicals such as mercury which is found in fluorescent lights. LEDs are manufactured from materials that can be fully recycled. Most energy used by the LED is converted into light, not heat. Traditional lighting is relatively inefficient due to the large amounts of heat generated in the production of light. Moreover, LEDs have a longer lifespan.

The Commissioner is hereby authorized to charge fees associated with this communication or credit any overpayment to Deposit Account No.: 50-4245.

Please direct all correspondence concerning the above-identified application to the following address:

O2MICRO, INC.
3118 Patrick Henry Dr.
Santa Clara, California 95054
(408) 987-5920
71271

Respectfully submitted,

Date: 05/04/2011

By: /Yue Li/
Yue Li
Reg. No. L0346

UNITED STATES PATENT AND TRADEMARK OFFICE

UNITED STATES DEPARTMENT OF COMMERCE
United States Patent and Trademark Office
Address: COMMISSIONER FOR PATENTS
P.O. Box 1450
Alexandria, Virginia 22313-1450
www.uspto.gov

APPLICATION NO.	FILING DATE	FIRST NAMED INVENTOR	ATTORNEY DOCKET NO.	CONFIRMATION NO.
13/100,434	05/04/2011	Yung Lin LIN	0795	2951

71271 7590 06/14/2011

PATENT PROSECUTION
O2MIRCO , INC.
3118 PATRICK HENRY DRIVE
SANTA CLARA, CA 95054

EXAMINER	
ART UNIT	PAPER NUMBER
2821	

MAIL DATE	DELIVERY MODE
06/14/2011	PAPER

Please find below and/or attached an Office communication concerning this application or proceeding.

The time period for reply, if any, is set in the attached communication.

UNITED STATES PATENT AND TRADEMARK OFFICE

Commissioner for Patents
United States Patent and Trademark Office
P.O. Box 1450
Alexandria, VA 22313-1450
www.uspto.gov

PATENT PROSECUTION
O2MIRCO , INC.
3118 PATRICK HENRY DRIVE
SANTA CLARA CA 95054

In re Application of	:	
LIN et al.	:	DECISION ON PETITION
Application No. 13/100,434	:	TO MAKE SPECIAL UNDER
Filed: May 04, 2011	:	THE GREEN TECHNOLOGY
Attorney Docket No. 0795	:	PILOT PROGRAM

This is a decision on the petition under 37 CFR 1.102, filed on May 04, 2011, to make the above-identified application special under the pilot program for applications pertaining to Green Technologies as set forth 74 Federal Register Notice 64666 (December 8, 2009) and amended by 75 Federal Register Notice 28554 (May 21, 2010) and 75 Federal Register Notice 69049 (November 10, 2010).

The petition is **GRANTED**.

A grantable petition to make an application special under 37 CFR 1.102 and the pilot program as set forth in 74 FR 64666 must be directed to a nonprovisional application filed under 35 USC 111(a) or be a national stage entry under 35 USC 371, exclusive of any reissue applications.

In order to qualify for special status, the following requirements must be met. 1) The application must have no more than 3 independent claims and no more than 20 total claims. 2) The application must not contain any multiple dependent claims. 3) The petition must state the basis for seeking special status, i.e., the claimed invention either: A) materially enhances the quality of the environment or B) materially contributes to: i) the discovery or development of renewable energy resources, ii) the more efficient utilization and conservation of energy resources, or iii) greenhouse gas emission reduction. 4) If the disclosure is not clear on its face that the claimed invention materially contributes under category (A) or (B), the petition must be accompanied by a statement by the applicant, assignee, or an attorney/agent registered to practice before the Office explaining how the materiality standard is met. 5) A statement that applicant will agree to make an election without traverse in a telephonic interview if a restriction requirement is made by the examiner. 6) The petition to make special must be filed electronically. 7) The petition must be filed at least one day prior to the date that a first Office Action appears in the Patent Application Information Retrieval (PAIR) system. 8) The petition must be accompanied by a request for early publication in compliance with 37 CFR 1.219 and include the publication fee as set forth in 37 CFR 1.18(d).

The requirement for a fee for consideration of the petition to make special for applications pertaining to Green Technologies has been waived.

The instant petition complies with items 1 – 8 above. Accordingly, the above-identified application has been accorded "special" status.

Telephone inquires concerning this decision should be directed to Lee W. Young at 571-272-4549.

The application is being forwarded to the Technology Center Art Unit 2821 for action on the merits commensurate with this decision.

Lee W. Young
Quality Assurance Specialist
Technology Center 2800

Doc Code: PET.GREEN
Document Description: Petition for Green Tech Pilot

PTO/SB/420 (05-10)
Approved for use through 01/31/2011. OMB 0651-0062
U.S. Patent and Trademark Office; U. S. DEPARTMENT OF COMMERCE
Under the Paperwork Reduction Act of 1995, no persons are required to respond to a collection of information unless it displays a valid OMB control number.

PETITION TO MAKE SPECIAL UNDER THE GREEN TECHNOLOGY PILOT PROGRAM

Attorney Docket Number: O2-0694	Application Number (if known):	Filing date:

First Named Inventor: Wei ZHANG

Title: SYSTEMS AND METHODS FOR CELL BALANCING

APPLICANT HEREBY REQUESTS TO PARTICIPATE IN THE GREEN TECHNOLOGY PILOT PROGRAM FOR THE ABOVE-IDENTIFIED APPLICATION. **See Instruction Sheet on page 2.**

This petition must be timely filed electronically using the USPTO electronic filing system, EFS-Web.

1. By filing this petition:

   Applicant is requesting early publication: Applicant hereby requests early publication under 37 CFR 1.219 and the publication fee set forth in 37 CFR 1.18(d) accompanies this request.

2. By filing this petition: applicant is agreeing to make an election without traverse in a telephonic interview and elect an invention that meets the eligibility requirements set forth in the notice titled "Pilot Program for Green Technologies Including Greenhouse Gas Reduction," as modified by the notice titled "Elimination of Classification Requirement in the Green Technology Pilot Program," each of which was published in the Federal Register, if the Office determines that the claims are not obviously directed to a single invention.

3. This request is accompanied by statements of special status for the eligibility requirement.

4. The application contains no more than three (3) independent claims and twenty (20) total claims.

5. The application does not contain any multiple dependent claims.

6. Other attachments: _____

Signature /Yue Li/	Date 2011-05-04
Name (Print/Typed) Yue Li	Registration Number L0346

Note: *Signatures of all the inventors or assignees of record of the entire interest or their representative(s) are required in accordance with 37 CFR 1.33 and 11.18. Please see 37 CFR 1.4(d) for the form of the signature. If necessary, submit multiple forms for more than one signature, see below*.*

☐ *Total of _____ forms are submitted.

The information is required to obtain or retain a benefit by the public which is to file (and by the USPTO to process) an application. Confidentiality is governed by 35 U.S.C. 122 and 37 CFR 1.11 and 1.14. This collection is estimated to take 1 hour to complete, including gathering, preparing, and submitting the completed application form to the USPTO. Time will vary depending upon the individual case. Any comments on the amount of time you require to complete this form and/or suggestions for reducing this burden, should be sent to the Chief Information Officer, U.S. Patent and Trademark Office, U.S. Department of Commerce, P.O. Box 1450, Alexandria, VA 22313-1450. DO NOT SEND FEES OR COMPLETED FORMS TO THIS ADDRESS. **SEND TO: Commissioner for Patents, P.O. Box 1450, Alexandria, VA 22313-1450.**

If you need assistance in completing the form, call 1-800-PTO-9199 and select option 2.

PTO/SB/420 (05-10)
Approved for use through 01/31/2011. OMB 0651-0062
U.S. Patent and Trademark Office; U. S. DEPARTMENT OF COMMERCE
Under the Paperwork Reduction Act of 1995, no persons are required to respond to a collection of information unless it displays a valid OMB control number.

Instruction Sheet for Petition to Make Special Under the Green Technology Pilot Program

(Not to be Submitted to the USPTO)

***The following is a summary of the requirements** (for more information see the notices (i) "Pilot Program for Green Technologies Including Greenhouse Gas Reduction" and (ii) "Elimination of Classification Requirement in the Green Technology Pilot Program," available on the USPTO web site at http://www.uspto.gov/patents/init_events/green_tech.jsp):*

(1) The application must be a non-reissue, non-provisional utility application filed under 35 U.S.C. 111(a), or an international application that has entered the national stage in compliance with 35 U.S.C. 371. The application must be previously filed before the publication date of the notice cited above. Reexamination proceedings are excluded from this pilot program.

(2) The application must contain three or fewer independent claims and twenty or fewer total claims. The application must not contain any multiple dependent claims. For an application that contains more than three independent claims or twenty total claims, or multiple dependent claims, applicant must file a preliminary amendment in compliance with 37 CFR 1.121 to cancel the excess claims and/or the multiple dependent claims at the time the petition to make special is filed.

(3) The claims must be directed to a single invention that materially enhances the quality of the environment, or that materially contributes to: (1) the discovery or development of renewable energy resources; (2) the more efficient utilization and conservation of energy resources; or (3) green house gas emission reduction (see the eligibility requirements of sections II and III of the notice (i) cited above). The petition must include a statement that, if the USPTO determines that the claims are directed to multiple inventions (e.g., in a restriction requirement), applicant will agree to make an election without traverse in a telephonic interview, and elect an invention that meets the eligibility requirements in section II or III of the notice (i) cited above.

(4) The petition to make special must be timely filed electronically using the USPTO electronic filing system, EFS-Web, and selecting the document description of "Petition for Green Tech Pilot" on the EFS-Web screen. Applicant should use form PTO/SB/420, which is available as a Portable Document Format (PDF) fillable form in EFS-Web and on the USPTO Web site.

(5) The petition to make special must be filed at least one day prior to the date that a first Office action (which may be an Office action containing only a restriction requirement) appears in the Patent Application Information Retrieval (PAIR) system. Applicant may check the status of the application using PAIR.

(6) The petition to make special must be accompanied by a request for early publication in compliance with 37 CFR 1.219 and the publication fee set forth in 37 CFR 1.18(d).

Privacy Act Statement

The **Privacy Act of 1974 (P.L. 93-579)** requires that you be given certain information in connection with your submission of the attached form related to a patent application or patent. Accordingly, pursuant to the requirements of the Act, please be advised that: (1) the general authority for the collection of this information is 35 U.S.C. 2(b)(2); (2) furnishing of the information solicited is voluntary; and (3) the principal purpose for which the information is used by the U.S. Patent and Trademark Office is to process and/or examine your submission related to a patent application or patent. If you do not furnish the requested information, the U.S. Patent and Trademark Office may not be able to process and/or examine your submission, which may result in termination of proceedings or abandonment of the application or expiration of the patent.

The information provided by you in this form will be subject to the following routine uses:

1. The information on this form will be treated confidentially to the extent allowed under the Freedom of Information Act (5 U.S.C. 552) and the Privacy Act (5 U.S.C 552a). Records from this system of records may be disclosed to the Department of Justice to determine whether disclosure of these records is required by the Freedom of Information Act.
2. A record from this system of records may be disclosed, as a routine use, in the course of presenting evidence to a court, magistrate, or administrative tribunal, including disclosures to opposing counsel in the course of settlement negotiations.
3. A record in this system of records may be disclosed, as a routine use, to a Member of Congress submitting a request involving an individual, to whom the record pertains, when the individual has requested assistance from the Member with respect to the subject matter of the record.
4. A record in this system of records may be disclosed, as a routine use, to a contractor of the Agency having need for the information in order to perform a contract. Recipients of information shall be required to comply with the requirements of the Privacy Act of 1974, as amended, pursuant to 5 U.S.C. 552a(m).
5. A record related to an International Application filed under the Patent Cooperation Treaty in this system of records may be disclosed, as a routine use, to the International Bureau of the World Intellectual Property Organization, pursuant to the Patent Cooperation Treaty.
6. A record in this system of records may be disclosed, as a routine use, to another federal agency for purposes of National Security review (35 U.S.C. 181) and for review pursuant to the Atomic Energy Act (42 U.S.C. 218(c)).
7. A record from this system of records may be disclosed, as a routine use, to the Administrator, General Services, or his/her designee, during an inspection of records conducted by GSA as part of that agency's responsibility to recommend improvements in records management practices and programs, under authority of 44 U.S.C. 2904 and 2906. Such disclosure shall be made in accordance with the GSA regulations governing inspection of records for this purpose, and any other relevant (*i.e.*, GSA or Commerce) directive. Such disclosure shall not be used to make determinations about individuals.
8. A record from this system of records may be disclosed, as a routine use, to the public after either publication of the application pursuant to 35 U.S.C. 122(b) or issuance of a patent pursuant to 35 U.S.C. 151. Further, a record may be disclosed, subject to the limitations of 37 CFR 1.14, as a routine use, to the public if the record was filed in an application which became abandoned or in which the proceedings were terminated and which application is referenced by either a published application, an application open to public inspection or an issued patent.
9. A record from this system of records may be disclosed, as a routine use, to a Federal, State, or local law enforcement agency, if the USPTO becomes aware of a violation or potential violation of law or regulation.

IN THE UNITED STATES PATENT AND TRADEMARK OFFICE

Applicant: ZHANG, Wei et al. Examiner:
Serial No.: Group Art Unit:
Filed: Docket: O2-0694
Confirmation No.:
Title: SYSTEMS AND METHODS FOR CELL BALANCING

STATEMENT OF SPECIAL STATUS FOR PETITION TO MAKE SPECIAL UNDER THE GREEN TECHNOLOGY PILOT PROGRAM

Commissioner for Patents
P.O. Box 1450
Alexandria, VA 22313-1450

Dear Sir:

BASIS FOR SPECIAL STATUS

Special status under the Green Technology Pilot program is sought because the claimed subject matter of this Application materially contributes to the more efficient utilization and conservation of energy resources. Further, the claimed subject matter of this Application materially enhances the quality of the environment through energy conservation.

HOW THE MATERIALITY STANDARD IS MET

The claimed subject matter of this Application is directed to system and method for balancing battery cells of a rechargeable multi-cell battery pack. The system and method materially contribute to the more efficient utilization and conservation of energy resources by implementing a balancing technique that makes rechargeable batteries more energy efficient and increases their energy storage compared to existing balancing technology. Consequently, a rechargeable multi-cell battery pack employing the claimed subject matter of this Application performs more energy efficient charge-discharge cycles than existing technology, which extends the rechargeable battery life and leads to the more efficient utilization and conservation of energy resources.

In a rechargeable multi-cell battery pack, cells may differ from each other due to cell aging and/or different cell temperatures. A voltage difference among the cells may increase as the number of charging/discharging cycles increases, which may cause imbalance between the cells and may shorten a battery life. Traditional cell balancing methods include discharging cells having relatively high cell voltages by connecting external loads (e.g., resistors) in parallel to the cells. However, such traditional cell balancing methods may induce considerable thermal energy dissipation, e.g., in electric vehicle (EV) applications.

Specific passages of the Specification discuss the claimed subject matter of this Application in connection with the efficient utilization and conservation of energy.

According to paragraph [118] of the Specification, "Advantageously, the donator module or the receiver module includes one or more battery cells. As such, by transferring energy from the donator module to the receiver module, the cell balancing is achieved more efficiently. Moreover, since the energy can be transferred from the donator module having a maximum average SOC value to the receiver module having a minimum average SOC value, the efficiency of the cell balancing is further improved. In other words, upon completion of the cell balancing, the energy stored in the battery pack 1202 can be higher compared to the battery pack using traditional cell balancing methods. As such, the battery pack 1202 performs more energy efficient charge-discharge cycles than existing technology, which extends the rechargeable battery life and leads to the more efficient utilization and conservation of energy resources."

Furthermore, rechargeable multi-cell battery packs can provide electrical power without the constraint of a power cord. They are widely used in portable devices such as cell phones, personal digital assistants (PDAs), laptops, and power tools, and now even can be used in electrical vehicles. The rechargeable multi-cell battery packs may utilize nickel-cadmium (NiCd), nickel-metal hydride (NiMH), or lithium ion (LiIon). The claimed subject matter promotes development of increased applications for rechargeable battery packs because of power efficiency and safety improvements. Moreover, the rechargeable battery packs may be used to replace other inefficient power sources and non-electric power sources such as gas.

The Commissioner is hereby authorized to charge fees associated with this communication or credit any overpayment to Deposit Account No.: 50-4245.

Please direct all correspondence concerning the above-identified application to the following address:

O2MICRO, INC.
3118 Patrick Henry Dr.
Santa Clara, California 95054
(408) 987-5920
71271

Respectfully submitted,

Date: 05/04/2011

By: /Yue Li/
Yue Li
Reg. No. L0346

UNITED STATES PATENT AND TRADEMARK OFFICE

UNITED STATES DEPARTMENT OF COMMERCE
United States Patent and Trademark Office
Address: COMMISSIONER FOR PATENTS
P.O. Box 1450
Alexandria, Virginia 22313-1450
www.uspto.gov

APPLICATION NO.	FILING DATE	FIRST NAMED INVENTOR	ATTORNEY DOCKET NO.	CONFIRMATION NO.
13/100,451	05/04/2011	Guoxing LI	0694	2988

71271 7590 07/06/2011

PATENT PROSECUTION
O2MIRCO , INC.
3118 PATRICK HENRY DRIVE
SANTA CLARA, CA 95054

EXAMINER	
ASSOUAD, PATRICK J	

ART UNIT	PAPER NUMBER
2858	

MAIL DATE	DELIVERY MODE
07/06/2011	PAPER

Please find below and/or attached an Office communication concerning this application or proceeding.

The time period for reply, if any, is set in the attached communication.

UNITED STATES PATENT AND TRADEMARK OFFICE

Commissioner for Patents
United States Patent and Trademark Office
P.O. Box 1450
Alexandria, VA 22313-1450
www.uspto.gov

PATENT PROSECUTION
O2MIRCO , INC.
3118 PATRICK HENRY DRIVE
SANTA CLARA CA 95054

In re Application of	:	
LI et al.	:	DECISION ON PETITION
Application No. 13/100,451	:	TO MAKE SPECIAL UNDER
Filed: May 04, 2011	:	THE GREEN TECHNOLOGY
Attorney Docket No. 0694	:	PILOT PROGRAM

This is a decision on the petition under 37 CFR 1.102, filed on May 04, 2011, to make the above-identified application special under the pilot program for applications pertaining to Green Technologies as set forth 74 Federal Register Notice 64666 (December 8, 2009) and amended by 75 Federal Register Notice 28554 (May 21, 2010) and 75 Federal Register Notice 69049 (November 10, 2010).

The petition is **DISMISSED**.

If reconsideration of this decision is desired, a petition for reconsideration must be filed within ONE (1) MONTH OR THIRTY (30) DAYS from the mail date of this decision, whichever is longer. No extension of this time limit can be granted under 37 CFR 1.136(a) or (b). The petition for reconsideration should include an exhaustive attempt to provide the lacking item(s) noted below, since, after a decision on the petition for reconsideration, no further reconsideration or review of the matter will be undertaken by the Director.

A grantable petition to make an application special under 37 CFR 1.102 and the pilot program as set forth in 74 FR 64666 must be directed to a nonprovisional application filed under 35 USC 111(a) or be a national stage entry under 35 USC 371, exclusive of any reissue applications and be filed prior to the date of the notice, December 8, 2009.

In order to qualify for special status, the following requirements must be met. 1) The application must have no more than 3 independent claims and no more than 20 total claims. 2) The application must not contain any multiple dependent claims. 3) The petition must state the basis for seeking special status, i.e., the claimed invention either: A) materially enhances the quality of the environment or B) materially contributes to: i) the discovery or development of renewable energy resources, ii) the more efficient utilization and conservation of energy resources, or iii) greenhouse gas emission reduction. 4) If the disclosure is not clear on its face that the claimed invention materially contributes under category (A) or (B), the petition must be accompanied by a statement by the applicant, assignee, or an attorney/agent registered to practice before the

Office explaining how the materiality standard is met. 5) A statement that applicant will agree to make an election without traverse in a telephonic interview if a restriction requirement is made by the examiner. 6) The petition to make special must be filed electronically. 7) The petition must be filed at least one day prior to the date that a first Office Action appears in the Patent Application Information Retrieval (PAIR) system. 8) The petition must be accompanied by a request for early publication in compliance with 37 CFR 1.219 and include the publication fee as set forth in 37 CFR 1.18(d).

The requirement for a fee for consideration of the petition to make special for applications pertaining to Green Technologies has been waived.

The petition lacks item 4.

In regard to item 4, applicant's statement pertaining to how the materiality standard is met does not satisfy the requirements for this pilot. The instant petition includes a statement identifying the basis for the special status as contributing to more efficient utilization and conservation of energy. The claims are generally directed to a method and apparatus for balancing cells of a battery pack. The petition alleges more efficient utilization and conservation of energy based on the ability to balance cells of a battery pack, to extend battery life, to increase the total charge capability of the battery, and to provide power without a power cord. While these abilities may be desirable, it is not readily apparent how any of these abilities provide for more efficient utilization of energy. A batteries ability to hold a greater charge or to have an extended serve life do not provide more efficient utilization of energy. Any argument that the claimed invention can be used with an electric vehicle is considered speculation as to how a hypothetical end-user might specially apply the invention.

Any reconsideration of this decision should be submitted through the USPTO electronic filing system, EFS-Web, and selecting the document description of "Petition for Green Tech Pilot" on the EFS-Web screen.

Telephone inquiries concerning this decision should be directed to Lee W. Young at 571-272-4549.

The application is being forwarded to the Technology Center Art Unit 2858 for action in its regular turn.

Lee W. Young
Quality Assurance Specialist
Technology Center 2800

0694
13/100,451

IN THE UNITED STATES PATENT AND TRADEMARK OFFICE

Applicant:	Guoxing LI, et al.	Examiner:	
Serial No.:	13/100,451	Group Art Unit:	2858
Filed:	05-04-2011		
Confirmation No.:	2988		
Title:	SYSTEMS AND METHODS FOR CELL BALANCING		

Mail Stop Petition
Commissioner for Patents
P.O Box 1450
Alexandria, VA 22313-1450

PETITION FOR RECONSIDERATION OF DISMISSAL OF PETITION TO MAKE SPECIAL UNDER THE GREEN TECHNOLOGY PILOT PROGRAM

1. Applicant hereby petitions to reconsider the dismissal of the Petition to Make Special Under the Green Technology Pilot Program ("the Petition").

2. According to the Decision on Petition to Make Special Under the Green Technology Pilot Program, the Petition was dismissed because it was contended Applicant's statement pertaining to how the materiality standard is met did not satisfy the requirements for the Green Technology Pilot Program. Applicant disagrees with this contention.

3. Applicant hereby submits a Supplemental Statement of Special Status and a Preliminary Amendment in support of this Petition for Reconsideration.

The Commissioner is hereby authorized to charge fees associated with this communication or credit any overpayment to Deposit Account No.: 50-4245.

Please direct all correspondence concerning the above-identified application to the following address:

O2MICRO, INC.
3118 Patrick Henry Dr.
Santa Clara, CA 95054
(408) 786-8932

Respectfully submitted,

Date: 07/27/2011

By: /Yue Li/
Yue Li
Limited Recognition No.: L0346

UNITED STATES PATENT AND TRADEMARK OFFICE

UNITED STATES DEPARTMENT OF COMMERCE
United States Patent and Trademark Office
Address: COMMISSIONER FOR PATENTS
P.O. Box 1450
Alexandria, Virginia 22313-1450
www.uspto.gov

APPLICATION NO.	FILING DATE	FIRST NAMED INVENTOR	ATTORNEY DOCKET NO.	CONFIRMATION NO.
13/100,451	05/04/2011	Guoxing LI	0694	2988

71271 7590 08/19/2011

PATENT PROSECUTION
O2MIRCO , INC.
3118 PATRICK HENRY DRIVE
SANTA CLARA, CA 95054

EXAMINER	
ASSOUAD, PATRICK J	

ART UNIT	PAPER NUMBER
2858	

MAIL DATE	DELIVERY MODE
08/19/2011	PAPER

Please find below and/or attached an Office communication concerning this application or proceeding.

The time period for reply, if any, is set in the attached communication.

UNITED STATES PATENT AND TRADEMARK OFFICE

Commissioner for Patents
United States Patent and Trademark Office
P.O. Box 1450
Alexandria, VA 22313-1450
www.uspto.gov

PATENT PROSECUTION
O2MIRCO , INC.
3118 PATRICK HENRY DRIVE
SANTA CLARA CA 95054

AUG 19 2011

In re Application of :
Guoxing Li et al. :
Application No. 13/100,451 :
Filed: May 04, 2011 :
Attorney Docket No. 0694 :

DECISION ON PETITION
TO MAKE SPECIAL UNDER
THE GREEN TECHNOLOGY
PILOT PROGRAM

This is a decision on the petition under 37 CFR 1.102, filed July 27, 2011, to make the above-identified application special under the pilot program for applications pertaining to Green Technologies as set forth in 74 Federal Register Notice 64666 (December 8, 2009) and amended by 75 Federal Register Notice 28554 (May 21, 2010) and 75 Federal Register Notice 69049 (November 10, 2010).

The petition is **GRANTED**.

A grantable petition to make an application special under 37 CFR 1.102 and the pilot program as set forth in 74 FR 64666 must be directed to a nonprovisional application filed under 35 USC 111(a) or be a national stage entry under 35 USC 371, exclusive of any reissue applications.

In order to qualify for special status, the following requirements must be met. 1) The application must have no more than 3 independent claims and no more than 20 total claims. 2) The application must not contain any multiple dependent claims. 3) The petition must state the basis for seeking special status, i.e., the claimed invention either: A) materially enhances the quality of the environment or B) materially contributes to: i) the discovery or development of renewable energy resources, ii) the more efficient utilization and conservation of energy resources, or iii) greenhouse gas emission reduction. 4) If the disclosure is not clear on its face that the claimed invention materially contributes under category (A) or (B), the petition must be accompanied by a statement by the applicant, assignee, or an attorney/agent registered to practice before the Office explaining how the materiality standard is met. 5) A statement that applicant will agree to make an election without traverse in a telephonic interview if a restriction requirement is made by the examiner. 6) The petition to make special must be filed electronically. 7) The petition must be filed at least one day prior to the date that a first Office Action appears in the Patent Application Information Retrieval (PAIR) system. 8) The petition must be accompanied by a request for early publication in compliance with 37 CFR 1.219 and include the publication fee as set forth in 37 CFR 1.18(d).

The requirement for a fee for consideration of the petition to make special for applications pertaining to Green Technologies has been waived.

The instant petition complies with items 1 – 8 above. Accordingly, the above-identified application has been accorded "special" status.

Telephone inquires concerning this decision should be directed to Blaine Copenheaver at 571-272-1156.

The application is being forwarded to the examiner for action on the merits commensurate with this decision.

/Blaine Copenheaver/

Blaine Copenheaver
Quality Assurance Specialist
Technology Center 1700

UNITED STATES PATENT AND TRADEMARK OFFICE

Commissioner for Patents
United States Patent and Trademark Office
P.O. Box 1450
Alexandria, VA 22313-1450
www.uspto.gov

PATENT PROSECUTION
O2MIRCO, INC.
3118 PATRICK HENRY DRIVE
SANTA CLARA CA 95054

MAILED
NOV 15 2011
OFFICE OF PETITIONS

In re Application of :
LI et al. :
Application No. 13/100,451 : DECISION ON PETITION
Filed: 05/04/2011 : UNDER 37 CFR 1.55(c)
Attorney Docket No. 0694 :

This is a decision on the petition under 37 CFR 1.55(c) filed October 27, 2011, to accept an unintentionally delayed claim under 35 U.S.C. § 119(a)-(d) for benefit of priority to the filing date of Chinese Patent Application No. 200910178565.8 filed September 30, 2009.

The petition is **DISMISSED**.

This application was filed after November 29, 2000, and did not include a reference to the foreign application, for which benefit is now sought, within the later of four months from the actual filing date of the application or sixteen months from the filing date of the prior foreign application. Since the claim for priority is submitted after the period specified in 37 CFR 1.55(a)(1)(i), this is an appropriate petition under the provisions of 37 CFR 1.55(c).

A petition under 37 CFR 1.55(c) to accept an unintentionally delayed claim for priority requires:

(1) The nonprovisional application claiming the benefit of an earlier filing date must be filed on or after November 29, 2000;
(2) the claim submitted with the petition must identify the prior foreign application for which priority is claimed, as well as any foreign application for the same subject matter and having a filing date before that of the application for which priority is claimed, by the application number, country, and the filing date, and be included either in an oath or declaration (37 CFR 1.63(c)(2)) or in an Application Data Sheet (37 CFR 1.76(b)(6));
(3) the surcharge as set forth in 37 CFR 1.17(t);

(4) a statement that the entire delay between the date the claim was due under 37 CFR 1.55(a)(1) and the date the claim was filed was unintentional (the Director may require additional information where there is a question whether the delay was unintentional); and

(5) the above-identified nonprovisional application must be filed within 12 months of the filing date of the foreign application.

The petition fails to comply with items (2) above.

A review of the file record fails to disclose that the priority information was included in an oath or declaration or in an Application Data Sheet (ADS) in accordance with 37 CFR 1.76(b)(6). Unless provided in an ADS, 37 CFR 1.63(c)(2) requires that the oath or declaration must identify the foreign application for patent (or inventor's certificate) for which priority is claimed under 37 CFR 1.55, and any foreign application having a filing date before that of the application on which priority is claimed, by specifying the application number, country, day, month, and year of its filing. *See* MPEP 201.14. Thus, compliance with 37 CFR 1.63(c)(2) or 37 CFR 1.76(b)(6) must be satisfied if applicant desires to claim priority to the foreign application noted in the petition.[1]

Any request for reconsideration of this decision must address the above-noted matter and be entitled "Renewed Petition under 37 CFR 1.55(c)." No additional petition fee is required for filing a renewed petition.

Further correspondence with respect to this matter should be addressed as follows:

By mail: Mail Stop PETITIONS
Commissioner for Patents
Post Office Box 1450
Alexandria, VA 22313-1450

[1] The Office notes that 37 CFR 1.33(b) requires that amendments and other papers, except for written assertions pursuant to 37 CFR 1.27(c)(2)(ii), filed in an application must be signed by an appropriate party. Therefore, an ADS or supplemental ADS submitted after the filing of an application **must be signed** in accordance with 37 CFR 1.33(b).

By hand: Customer Service Window
Mail Stop Petitions
Randolph Building
401 Dulany Street
Alexandria, VA 22314

By fax: (571) 273-8300
ATTN: Office of Petitions

Correspondence may also be submitted via the Electronic Filing System of the USPTO.

Any questions concerning this matter may be directed to the undersigned at (571) 272-3211.

C. T Donnell

Christina Tartera Donnell
Senior Petitions Attorney
Office of Petitions

UNITED STATES PATENT AND TRADEMARK OFFICE

Commissioner for Patents
United States Patent and Trademark Office
P.O. Box 1450
Alexandria, VA 22313-1450
www.uspto.gov

PATENT PROSECUTION
O2MIRCO, INC.
3118 PATRICK HENRY DRIVE
SANTA CLARA CA 95054

MAILED

DEC 05 2011

OFFICE OF PETITIONS

In re Application of :
LI et al. :
Application No. 13/100,451 : DECISION ON PETITION
Filed: 05/04/2011 : UNDER 37 CFR 1.55(c)
Attorney Docket No. 0694 :

This is a decision on the renewed petition under 37 CFR 1.55(c) filed December 2, 2011, to accept an unintentionally delayed claim under 35 U.S.C. § 119(a)-(d) for benefit of priority to the filing date of Chinese Patent Application No. 200910178565.8 filed September 30, 2009.

The petition is **GRANTED**.

This application was filed after November 29, 2000, and did not include a reference to the foreign application, for which benefit is now sought, within the later of four months from the actual filing date of the application or sixteen months from the filing date of the prior foreign application. As the claim for priority is submitted after the period specified in 37 CFR 1.55(a)(1)(i), this is an appropriate petition under the provisions of 37 CFR 1.55(c).

A petition under 37 CFR 1.55(c) to accept an unintentionally delayed claim for priority requires:

(1) The nonprovisional application claiming the benefit of an earlier filing date must be filed on or after November 29, 2000;
(2) the claim submitted with the petition must identify the prior foreign application for which priority is claimed, as well as any foreign application for the same subject matter and having a filing date before that of the application for which priority is claimed, by the application number, country, and the filing date, and be included either in an oath or declaration (37 CFR 1.63(c)(2)) or in an Application Data Sheet (37 CFR 1.76(b)(6));
(3) the surcharge as set forth in 37 CFR 1.17(t);

(4) a statement that the entire delay between the date the claim was due under 37 CFR 1.55(a)(1) and the date the claim was filed was unintentional (the Director may require additional information where there is a question whether the delay was unintentional); and

(5) the above-identified nonprovisional application must be filed within 12 months of the filing date of the foreign application.

Intermediate Application No. 12/891,784 was filed on September 27, 2010, which is after November 29, 2000, and within 12 months of September 30, 2009 (the filing date of the foreign application to which benefit is now being claimed). Petitioner submitted an Application Data Sheet on renewed petition, which identifies the foreign application for which priority is claimed by application number, country and filing date. Petitioner submitted the required petition fee of $1,410.00.and provided an adequate statement of unintentional delay.

All of the above requirements having been satisfied, the late claim for priority under 35 U.S.C. § 119(a)-(d) is accepted as being unintentionally delayed.

The granting of the petition to accept the delayed benefit claim to the prior-filed application under 37 CFR 1.55(c) should not be construed as meaning that this application is entitled to the benefit of the prior-filed application. In order for this application to be entitled to the benefit of the prior-filed application, all other requirements under 35 U.S.C. § 119(a)-(d) and 37 CFR 1.55(a)(1) must be met. Similarly, the fact that the corrected Filing Receipt accompanying this decision on petition includes the prior-filed application should not be construed as meaning that applicant is entitled to the claim for benefit of priority to the prior-filed application noted thereon. Accordingly, the examiner will, in due course, consider this benefit claim and determine whether this application is entitled to the benefit of the earlier filing date.

A corrected Filing Receipt, which includes the priority claim to the prior-filed foreign application, accompanies this decision on petition.

This application is being referred to Technology Center AU 2858 for examination in due course and for consideration by the examiner of record of the foreign priority claim under 35 U.S.C. § 119(a)-(d).

Any inquiries directly pertaining to this matter may be directed to the undersigned at (571) 272-3211.

C. T. Donnell

Christina Tartera Donnell
Senior Petitions Attorney
Office of Petitions

UNITED STATES PATENT AND TRADEMARK OFFICE

UNITED STATES DEPARTMENT OF COMMERCE
United States Patent and Trademark Office
Address: COMMISSIONER FOR PATENTS
P.O. Box 1450
Alexandria, Virginia 22313-1450
www.uspto.gov

APPLICATION NUMBER	FILING or 371(c) DATE	GRP ART UNIT	FIL FEE REC'D	ATTY.DOCKET.NO	TOT CLAIMS	IND CLAIMS
13/100,451	05/04/2011	2858	1520	0694	20	3

CONFIRMATION NO. 2988

CORRECTED FILING RECEIPT

71271
PATENT PROSECUTION
O2MIRCO , INC.
3118 PATRICK HENRY DRIVE
SANTA CLARA, CA 95054

Date Mailed: 12/05/2011

Receipt is acknowledged of this non-provisional patent application. The application will be taken up for examination in due course. Applicant will be notified as to the results of the examination. Any correspondence concerning the application must include the following identification information: the U.S. APPLICATION NUMBER, FILING DATE, NAME OF APPLICANT, and TITLE OF INVENTION. Fees transmitted by check or draft are subject to collection. Please verify the accuracy of the data presented on this receipt. **If an error is noted on this Filing Receipt, please submit a written request for a Filing Receipt Correction. Please provide a copy of this Filing Receipt with the changes noted thereon. If you received a "Notice to File Missing Parts" for this application, please submit any corrections to this Filing Receipt with your reply to the Notice. When the USPTO processes the reply to the Notice, the USPTO will generate another Filing Receipt incorporating the requested corrections**

Applicant(s)

Guoxing LI, Sunnyvale, CA;
Wei ZHANG, Shanghai, CHINA;
Songtao CHEN, Shenzhen, CHINA;
Chutao ZHANG, Shenzhen, CHINA;

Assignment For Published Patent Application

O2MICRO, INC., Santa Clara, CA

Power of Attorney: The patent practitioners associated with Customer Number 71271

Domestic Priority data as claimed by applicant

This application is a CIP of 12/891,784 09/27/2010

Foreign Applications (You may be eligible to benefit from the **Patent Prosecution Highway** program at the USPTO. Please see http://www.uspto.gov for more information.)
CHINA 200910178565.8 09/30/2009

If Required, Foreign Filing License Granted: 05/16/2011

The country code and number of your priority application, to be used for filing abroad under the Paris Convention, is **US 13/100,451**

Projected Publication Date: Not Applicable

Non-Publication Request: No

Early Publication Request: Yes

Title

SYSTEMS AND METHODS FOR CELL BALANCING

Preliminary Class

320

PROTECTING YOUR INVENTION OUTSIDE THE UNITED STATES

Since the rights granted by a U.S. patent extend only throughout the territory of the United States and have no effect in a foreign country, an inventor who wishes patent protection in another country must apply for a patent in a specific country or in regional patent offices. Applicants may wish to consider the filing of an international application under the Patent Cooperation Treaty (PCT). An international (PCT) application generally has the same effect as a regular national patent application in each PCT-member country. The PCT process **simplifies** the filing of patent applications on the same invention in member countries, but **does not result** in a grant of "an international patent" and does not eliminate the need of applicants to file additional documents and fees in countries where patent protection is desired.

Almost every country has its own patent law, and a person desiring a patent in a particular country must make an application for patent in that country in accordance with its particular laws. Since the laws of many countries differ in various respects from the patent law of the United States, applicants are advised to seek guidance from specific foreign countries to ensure that patent rights are not lost prematurely.

Applicants also are advised that in the case of inventions made in the United States, the Director of the USPTO must issue a license before applicants can apply for a patent in a foreign country. The filing of a U.S. patent application serves as a request for a foreign filing license. The application's filing receipt contains further information and guidance as to the status of applicant's license for foreign filing.

Applicants may wish to consult the USPTO booklet, "General Information Concerning Patents" (specifically, the section entitled "Treaties and Foreign Patents") for more information on timeframes and deadlines for filing foreign patent applications. The guide is available either by contacting the USPTO Contact Center at 800-786-9199, or it can be viewed on the USPTO website at http://www.uspto.gov/web/offices/pac/doc/general/index.html.

For information on preventing theft of your intellectual property (patents, trademarks and copyrights), you may wish to consult the U.S. Government website, http://www.stopfakes.gov. Part of a Department of Commerce initiative, this website includes self-help "toolkits" giving innovators guidance on how to protect intellectual property in specific countries such as China, Korea and Mexico. For questions regarding patent enforcement issues, applicants may call the U.S. Government hotline at 1-866-999-HALT (1-866-999-4158).

LICENSE FOR FOREIGN FILING UNDER

Title 35, United States Code, Section 184

Title 37, Code of Federal Regulations, 5.11 & 5.15

GRANTED

The applicant has been granted a license under 35 U.S.C. 184, if the phrase "IF REQUIRED, FOREIGN FILING LICENSE GRANTED" followed by a date appears on this form. Such licenses are issued in all applications where the conditions for issuance of a license have been met, regardless of whether or not a license may be required as

set forth in 37 CFR 5.15. The scope and limitations of this license are set forth in 37 CFR 5.15(a) unless an earlier license has been issued under 37 CFR 5.15(b). The license is subject to revocation upon written notification. The date indicated is the effective date of the license, unless an earlier license of similar scope has been granted under 37 CFR 5.13 or 5.14.

This license is to be retained by the licensee and may be used at any time on or after the effective date thereof unless it is revoked. This license is automatically transferred to any related applications(s) filed under 37 CFR 1.53(d). This license is not retroactive.

The grant of a license does not in any way lessen the responsibility of a licensee for the security of the subject matter as imposed by any Government contract or the provisions of existing laws relating to espionage and the national security or the export of technical data. Licensees should apprise themselves of current regulations especially with respect to certain countries, of other agencies, particularly the Office of Defense Trade Controls, Department of State (with respect to Arms, Munitions and Implements of War (22 CFR 121-128)); the Bureau of Industry and Security, Department of Commerce (15 CFR parts 730-774); the Office of Foreign AssetsControl, Department of Treasury (31 CFR Parts 500+) and the Department of Energy.

NOT GRANTED

No license under 35 U.S.C. 184 has been granted at this time, if the phrase "IF REQUIRED, FOREIGN FILING LICENSE GRANTED" DOES NOT appear on this form. Applicant may still petition for a license under 37 CFR 5.12, if a license is desired before the expiration of 6 months from the filing date of the application. If 6 months has lapsed from the filing date of this application and the licensee has not received any indication of a secrecy order under 35 U.S.C. 181, the licensee may foreign file the application pursuant to 37 CFR 5.15(b).

SelectUSA

The United States represents the largest, most dynamic marketplace in the world and is an unparalleled location for business investment, innovation and commercialization of new technologies. The USA offers tremendous resources and advantages for those who invest and manufacture goods here. Through SelectUSA, our nation works to encourage, facilitate, and accelerate business investment. To learn more about why the USA is the best country in the world to develop technology, manufacture products, and grow your business, visit SelectUSA.gov.

Doc Code: PET.GREEN
Document Description: Petition for Green Tech Pilot

PTO/SB/420 (03-11)

PETITION TO MAKE SPECIAL UNDER THE GREEN TECHNOLOGY PILOT PROGRAM

Attorney Docket Number: 239297	Application Number (if known): 13/100,466	Filing date: May 4, 2011

First Named Inventor: Till Hoffmann

Title: METHODS AND APPARATUS FOR CONTROLLING WIND TURBINE THRUST

APPLICANT HEREBY REQUESTS TO PARTICIPATE IN THE GREEN TECHNOLOGY PILOT PROGRAM FOR THE ABOVE-IDENTIFIED APPLICATION. See Instruction Sheet on page 2.

This petition must be timely filed electronically using the USPTO electronic filing system, EFS-Web.

1. By filing this petition:

   Applicant is requesting early publication: Applicant hereby requests early publication under 37 CFR 1.219 and the publication fee set forth in 37 CFR 1.18(d) accompanies this request.

2. By filing this petition: applicant is agreeing to make an election without traverse in a telephonic interview and elect an invention that meets the eligibility requirements for the Green Technology Pilot Program, if the Office determines that the claims are not obviously directed to a single invention. See Instruction Sheet.

3. This request is accompanied by statements of special status for the eligibility requirement.

4. The application contains no more than three (3) independent claims and twenty (20) total claims.

5. The application does not contain any multiple dependent claims.

6. Other attachments: Statement Concerning the Basis for the Special Status

Signature /Allison W. Mages/	Date October 12, 2011
Name (Print/Typed) Allison W. Mages	Registration Number 57,275

Note: Signatures of all the inventors or assignees of record of the entire interest or their representative(s) are required in accordance with 37 CFR 1.33 and 11.18. Please see 37 CFR 1.4(d) for the form of the signature. If necessary, submit multiple forms for more than one signature, see below.*

☐ *Total of _____ forms are submitted.

If you need assistance in completing the form, call 1-800-PTO-9199 and select option 2.

IN THE UNITED STATES PATENT AND TRADEMARK OFFICE

First Named Inventor: Till Hoffmann	)
Confirmation No.: 3010	)
	)
Serial No.: 13/100,466	)
	)
Filing Date: May 4, 2011	)
	)
Atty Docket No.: 239297	)

VIA EFS
Commissioner for Patents
P.O. Box 1450
Alexandria, VA 22313-1450

Statement Concerning the Basis for the Special Status

SIR:

The present application relates in general to wind turbine, and more particularly to methods and apparatus for controlling the thrust on the wind turbine. (See [0001]).

Applicant respectfully submits that Special Status is sought on the basis that the present invention materially contributes to the discovery or development of renewable energy resources.

The undersigned representative may be contacted at the number below to facilitate the resolution of any matters. Please charge any fees that are incurred in connection with this Statement to deposit account no. 09-0470.

Respectfully submitted,

General Electric Company

By : /Allison W. Mages/
Allison W. Mages
Reg. No. 57,275

Dated: October 12, 2011

GE Global Patent Operation
2 Corporate Drive, Suite 648
Shelton, CT 06484
203-944-6730

Doc Code: PET.GREEN
Document Description: Petition for Green Tech Pilot

PTO/SB/420 (12-09)
Approved for use through 05/31/2010. OMB 0651-0062
U.S. Patent and Trademark Office; U. S. DEPARTMENT OF COMMERCE
Under the Paperwork Reduction Act of 1995, no persons are required to respond to a collection of information unless it displays a valid OMB control number.

PETITION TO MAKE SPECIAL UNDER THE GREEN TECHNOLOGY PILOT PROGRAM

Attorney Docket Number: CL5006USNA	Application Number (if known): 13/100533	Filing date: May 4, 2011

First Named Inventor: Alan Frederick Carroll

Title: THICK-FILM PASTES CONTAINING LEAD- AND TELLURIUM-OXIDES, AND THEIR USE IN THE MANUFACTURE OF SEMICONDUCTOR DEVICES

APPLICANT HEREBY REQUESTS TO PARTICIPATE IN THE GREEN TECHNOLOGY PILOT PROGRAM FOR THE ABOVE-IDENTIFIED APPLICATION. See Instruction Sheet on page 2.

This petition must be timely filed electronically using the USPTO electronic filing system, EFS-Web.

1. By filing this petition:

   Applicant is requesting early publication: Applicant hereby requests early publication under 37 CFR 1.219 and the publication fee set forth in 37 CFR 1.18(d) accompanies this request. Applicant hereby rescinds under 37 CFR 1.213(b) any previous filed request that the above-identified application not be published under 35 U.S.C. 122(b).

   If the application has been published, the petition must still be accompanied by the publication fee set forth in 37 CFR 1.18(d) and a statement that the application has been published.

2. By filing this petition: applicant is agreeing to make an election without traverse in a telephonic interview and elect an invention that meets the eligibility requirement and classification requirement set forth in the notice entitled "Pilot Program for Green Technologies Including Greenhouse Gas Reduction" that was published in the Federal Register if the Office determines that the claims are not obviously directed to a single invention.

3. This request is accompanied by statements of special status for the eligibility requirement.

4. The application contains no more than three (3) independent claims and twenty (20) total claims.

5. The application does not contain any multiple dependent claims.

6. Other attachments: (1) Statement of Special Status and Request To Participate

Signature /Sherry M. Carty/	Date June 14, 2011
Name (Print/Typed) SHERRY M. CARTY	Registration Number 51,534

***Note**: Signatures of all the inventors or assignees of record of the entire interest or their representative(s) are required in accordance with 37 CFR 1.33 and 11.18. Please see 37 CFR 1.4(d) for the form of the signature. If necessary, submit multiple forms for more than one signature, see below*.*

▩ *Total of 1 forms are submitted.

The information is required to obtain or retain a benefit by the public which is to file (and by the USPTO to process) an application. Confidentiality is governed by 35 U.S.C. 122 and 37 CFR 1.11 and 1.14. This collection is estimated to take 12 hours to complete, including gathering, preparing, and submitting the completed application form to the USPTO. Time will vary depending upon the individual case. Any comments on the amount of time you require to complete this form and/or suggestions for reducing this burden, should be sent to the Chief Information Officer, U.S. Patent and Trademark Office, U.S. Department of Commerce, P.O. Box 1450, Alexandria, VA 22313-1450. DO NOT SEND FEES OR COMPLETED FORMS TO THIS ADDRESS. **SEND TO: Commissioner for Patents, P.O. Box 1450, Alexandria, VA 22313-1450.**

If you need assistance in completing the form, call 1-800-PTO-9199 and select option 2.

PATENT

IN THE UNITED STATES PATENT AND TRADEMARK OFFICE

IN THE APPLICATION OF:

CARROLL ET AL.

CASE NO.:	CL5006 US NA	APPLICATION NO.:	13/100533
CONFIRMATION NO.:	3177	GROUP ART UNIT:	
EXAMINER:		FILED:	MAY 4, 2011

FOR: THICK-FILM PASTES CONTAINING LEAD- AND TELLURIUM-OXIDES, AND THEIR USE IN THE MANUFACTURE OF SEMICONDUCTOR DEVICES

PETITION TO MAKE SPECIAL

STATEMENT OF SPECIAL STATUS AND REQUEST TO PARTICIPATE IN THE GREEN TECHNOLOGY PILOT PROGRAM

VIA EFS-WEB

Commissioner for Patents
P.O. Box 1450
Alexandria, VA 22313-1450

Dear Sir,

Submitted herewith is the completed USPTO form PTO/SB/420 and a Petition to Make Special pursuant to the Federal Register Notice of December 8, 2009, vol. 74, No 234, pages 64666-64668, to participate in the Green Technology Pilot Program as described in said Notice.

The above-referenced application has not been published. In accordance with the requirements for the Pilot Program, we request early publication of this application. Please charge Deposit Account No. 04-1928 (E.I. du Pont de Nemours and Company) for the publication fee set forth in 37 CFR 1.18(d).

Applicants submit that the application relates to the development of solar cell electrodes, and as such, the claimed invention materially contributes to the discovery or development of renewable energy resources.

If participation in the Green Technology Pilot Program is granted, Applicants hereby agree to make an election without traverse in a telephonic interview and elect an invention that meets the eligibility requirement and classification requirement set forth in the notice entitled "Pilot Program for Green Technologies Including Greenhouse Gas Reduction" that was published in the Federal Register if the Office determines that the claims are not obviously directed to a single invention.

The application contains no more than three independent claims and twenty total claims and does not contain any multiple dependent claims.

If any additional fees are required, please charge Deposit Account No. 04-1928 (E.I. du Pont de Nemours and Company).

Respectfully submitted,

/Sherry M. Carty/

SHERRY M. CARTY
ATTORNEY/AGENT FOR APPLICANTS
Registration No.: 51,534
Telephone: 919-248-5310
Facsimile: (302) 355-3982

Dated: June 14, 2011

UNITED STATES PATENT AND TRADEMARK OFFICE

UNITED STATES DEPARTMENT OF COMMERCE
United States Patent and Trademark Office
Address: COMMISSIONER FOR PATENTS
P.O. Box 1450
Alexandria, Virginia 22313-1450
www.uspto.gov

APPLICATION NO.	FILING DATE	FIRST NAMED INVENTOR	ATTORNEY DOCKET NO.	CONFIRMATION NO.
13/100,533	05/04/2011	Alan Frederick Carroll	CL5006USNA	3177

23906 7590 09/20/2011

E I DU PONT DE NEMOURS AND COMPANY
LEGAL PATENT RECORDS CENTER
BARLEY MILL PLAZA 25/1125
4417 LANCASTER PIKE
WILMINGTON, DE 19805

EXAMINER	
ART UNIT	PAPER NUMBER

NOTIFICATION DATE	DELIVERY MODE
09/20/2011	ELECTRONIC

Please find below and/or attached an Office communication concerning this application or proceeding.

The time period for reply, if any, is set in the attached communication.

Notice of the Office communication was sent electronically on above-indicated "Notification Date" to the following e-mail address(es):

PTO-Legal.PRC@usa.dupont.com

UNITED STATES PATENT AND TRADEMARK OFFICE

Commissioner for Patents
United States Patent and Trademark Office
P.O. Box 1450
Alexandria, VA 22313-1450
www.uspto.gov

E I DU PONT DE NEMOURS AND COMPANY
LEGAL PATENT RECORDS CENTER
BARLEY MILL PLAZA 25/1125
4417 LANCASTER PIKE
WILMINGTON DE 19805

9/20/11

In re Application of :
Carroll et al. :
Application No. 13/100,533 :
Filed: 5/4/2011 :
Attorney Docket No. **CL5006USNA** :

DECISION ON PETITION
TO MAKE SPECIAL UNDER
THE GREEN TECHNOLOGY
PILOT PROGRAM

This is a decision on the petition under 37 CFR 1.102, filed 6/14/2011, to make the above-identified application special under the pilot program for applications pertaining to Green Technologies as set forth in 74 Federal Register Notice 64666 (December 8, 2009) and amended by 75 Federal Register Notice 28554 (May 21, 2010) and 75 Federal Register Notice 69049 (November 10, 2010).

The petition is **GRANTED**.

A grantable petition to make an application special under 37 CFR 1.102 and the pilot program as set forth in 74 FR 64666 must be directed to a nonprovisional application filed under 35 USC 111(a) or be a national stage entry under 35 USC 371, exclusive of any reissue applications.

In order to qualify for special status, the following requirements must be met. 1) The application must have no more than 3 independent claims and no more than 20 total claims. 2) The application must not contain any multiple dependent claims. 3) The petition must state the basis for seeking special status, i.e., the claimed invention either: A) materially enhances the quality of the environment or B) materially contributes to: i) the discovery or development of renewable energy resources, ii) the more efficient utilization and conservation of energy resources, or iii) greenhouse gas emission reduction. 4) If the disclosure is not clear on its face that the claimed invention materially contributes under category (A) or (B), the petition must be accompanied by a statement by the applicant, assignee, or an attorney/agent registered to practice before the Office explaining how the materiality standard is met. 5) A statement that applicant will agree to make an election without traverse in a telephonic interview if a restriction requirement is made by the examiner. 6) The petition to make special must be filed electronically. 7) The petition must be filed at least one day prior to the date that a first Office Action appears in the Patent Application Information Retrieval (PAIR) system. 8) The petition must be accompanied by a

request for early publication in compliance with 37 CFR 1.219 and include the publication fee as set forth in 37 CFR 1.18(d).

The requirement for a fee for consideration of the petition to make special for applications pertaining to Green Technologies has been waived.

The instant petition complies with items 1 – 8 above. Accordingly, the above-identified application has been accorded "special" status.

Telephone inquires concerning this decision should be directed to Tom Dunn at 571-272-1171.

The application is being forwarded to the Technology Center Art Unit 1700 for action on the merits commensurate with this decision.

/Tom Dunn/

Tom Dunn
Quality Assurance Specialist
Technology Center 1700

Doc Code: PET.GREEN
Document Description: Petition for Green Tech Pilot

PTO/SB/420 (12-09)
Approved for use through 05/31/2010. OMB 0651-0062
U.S. Patent and Trademark Office; U. S. DEPARTMENT OF COMMERCE
Under the Paperwork Reduction Act of 1995, no persons are required to respond to a collection of information unless it displays a valid OMB control number.

PETITION TO MAKE SPECIAL UNDER THE GREEN TECHNOLOGY PILOT PROGRAM

Attorney Docket Number: EL0979USNA	Application Number (if known): 13/100540	Filing date: May 4, 2011

First Named Inventor: Alan Frederick Carroll

Title: THICK-FILM PASTES CONTAINING LEAD-TELLURIUM-LITHIUM-TITANIUM-OXIDES, AND THEIR USE IN THE MANUFACTURE OF SEMICONDUCTOR DEVICES

APPLICANT HEREBY REQUESTS TO PARTICIPATE IN THE GREEN TECHNOLOGY PILOT PROGRAM FOR THE ABOVE-IDENTIFIED APPLICATION. See Instruction Sheet on page 2.

This petition must be timely filed electronically using the USPTO electronic filing system, EFS-Web.

1. By filing this petition:

   Applicant is requesting early publication: Applicant hereby requests early publication under 37 CFR 1.219 and the publication fee set forth in 37 CFR 1.18(d) accompanies this request. Applicant hereby rescinds under 37 CFR 1.213(b) any previous filed request that the above-identified application not be published under 35 U.S.C. 122(b).

   If the application has been published, the petition must still be accompanied by the publication fee set forth in 37 CFR 1.18(d) and a statement that the application has been published.

2. By filing this petition: applicant is agreeing to make an election without traverse in a telephonic interview and elect an invention that meets the eligibility requirement and classification requirement set forth in the notice entitled "Pilot Program for Green Technologies Including Greenhouse Gas Reduction" that was published in the Federal Register if the Office determines that the claims are not obviously directed to a single invention.

3. This request is accompanied by statements of special status for the eligibility requirement.

4. The application contains no more than three (3) independent claims and twenty (20) total claims.

5. The application does not contain any multiple dependent claims.

6. Other attachments: (1) Statement of Special Status and Request To Participate

Signature /Sherry M. Carty/	Date June 14, 2011
Name (Print/Typed) SHERRY M. CARTY	Registration Number 51,534

***Note**: Signatures of all the inventors or assignees of record of the entire interest or their representative(s) are required in accordance with 37 CFR 1.33 and 11.18. Please see 37 CFR 1.4(d) for the form of the signature. If necessary, submit multiple forms for more than one signature, see below*.*

▩ *Total of 1 forms are submitted.

The information is required to obtain or retain a benefit by the public which is to file (and by the USPTO to process) an application. Confidentiality is governed by 35 U.S.C. 122 and 37 CFR 1.11 and 1.14. This collection is estimated to take 12 hours to complete, including gathering, preparing, and submitting the completed application form to the USPTO. Time will vary depending upon the individual case. Any comments on the amount of time you require to complete this form and/or suggestions for reducing this burden, should be sent to the Chief Information Officer, U.S. Patent and Trademark Office, U.S. Department of Commerce, P.O. Box 1450, Alexandria, VA 22313-1450. DO NOT SEND FEES OR COMPLETED FORMS TO THIS ADDRESS. **SEND TO: Commissioner for Patents, P.O. Box 1450, Alexandria, VA 22313-1450.**

If you need assistance in completing the form, call 1-800-PTO-9199 and select option 2.

PATENT

IN THE UNITED STATES PATENT AND TRADEMARK OFFICE

IN THE APPLICATION OF:

CARROLL ET AL.

CASE NO.:	EL0979 US NA	APPLICATION NO.:	13/100540
CONFIRMATION NO.:	3186	GROUP ART UNIT:	
EXAMINER:		FILED:	MAY 4, 2011

FOR: THICK-FILM PASTES CONTAINING LEAD-TELLURIUM-LITHIUM-TITANIUM-OXIDES, AND THEIR USE IN THE MANUFACTURE OF SEMICONDUCTOR DEVICES

PETITION TO MAKE SPECIAL

STATEMENT OF SPECIAL STATUS AND REQUEST TO PARTICIPATE IN THE GREEN TECHNOLOGY PILOT PROGRAM

VIA EFS-WEB

Commissioner for Patents
P.O. Box 1450
Alexandria, VA 22313-1450

Dear Sir,

Submitted herewith is the completed USPTO form PTO/SB/420 and a Petition to Make Special pursuant to the Federal Register Notice of December 8, 2009, vol. 74, No 234, pages 64666-64668, to participate in the Green Technology Pilot Program as described in said Notice.

The above-referenced application has not been published. In accordance with the requirements for the Pilot Program, we request early publication of this application. Please charge Deposit Account No. 04-1928 (E.I. du Pont de Nemours and Company) for the publication fee set forth in 37 CFR 1.18(d).

Applicants submit that the application relates to the development of solar cell electrodes, and as such, the claimed invention materially contributes to the discovery or development of renewable energy resources.

If participation in the Green Technology Pilot Program is granted, Applicants hereby agree to make an election without traverse in a telephonic interview and elect an invention that meets the eligibility requirement and classification requirement set forth in the notice entitled "Pilot Program for Green Technologies Including Greenhouse Gas Reduction" that was published in the Federal Register if the Office determines that the claims are not obviously directed to a single invention.

The application contains no more than three independent claims and twenty total claims and does not contain any multiple dependent claims.

If any additional fees are required, please charge Deposit Account No. 04-1928 (E.I. du Pont de Nemours and Company).

Respectfully submitted,

/Sherry M. Carty/

SHERRY M. CARTY
ATTORNEY/AGENT FOR APPLICANTS
Registration No.: 51,534
Telephone: 919-248-5310
Facsimile: (302) 355-3982

Dated: June 14, 2011

UNITED STATES PATENT AND TRADEMARK OFFICE

UNITED STATES DEPARTMENT OF COMMERCE
United States Patent and Trademark Office
Address: COMMISSIONER FOR PATENTS
P.O. Box 1450
Alexandria, Virginia 22313-1450
www.uspto.gov

APPLICATION NO.	FILING DATE	FIRST NAMED INVENTOR	ATTORNEY DOCKET NO.	CONFIRMATION NO.
13/100,540	05/04/2011	Alan Frederick Carroll	EL0979USNA	3186

23906 7590 09/20/2011

E I DU PONT DE NEMOURS AND COMPANY
LEGAL PATENT RECORDS CENTER
BARLEY MILL PLAZA 25/1125
4417 LANCASTER PIKE
WILMINGTON, DE 19805

EXAMINER	
ART UNIT	PAPER NUMBER

NOTIFICATION DATE	DELIVERY MODE
09/20/2011	ELECTRONIC

Please find below and/or attached an Office communication concerning this application or proceeding.

The time period for reply, if any, is set in the attached communication.

Notice of the Office communication was sent electronically on above-indicated "Notification Date" to the following e-mail address(es):

PTO-Legal.PRC@usa.dupont.com

UNITED STATES PATENT AND TRADEMARK OFFICE

Commissioner for Patents
United States Patent and Trademark Office
P.O. Box 1450
Alexandria, VA 22313-1450
www.uspto.gov

E I DU PONT DE NEMOURS AND COMPANY
LEGAL PATENT RECORDS CENTER
BARLEY MILL PLAZA 25/1125
4417 LANCASTER PIKE
WILMINGTON DE 19805

9/20/11

In re Application of	:	
Carroll et al.	:	DECISION ON PETITION
Application No. 13/100,540	:	TO MAKE SPECIAL UNDER
Filed: 5/4/2011	:	THE GREEN TECHNOLOGY
Attorney Docket No. **EL0979USNA**	:	PILOT PROGRAM

This is a decision on the petition under 37 CFR 1.102, filed 6/14/2011, to make the above-identified application special under the pilot program for applications pertaining to Green Technologies as set forth in 74 Federal Register Notice 64666 (December 8, 2009) and amended by 75 Federal Register Notice 28554 (May 21, 2010) and 75 Federal Register Notice 69049 (November 10, 2010).

The petition is **GRANTED**.

A grantable petition to make an application special under 37 CFR 1.102 and the pilot program as set forth in 74 FR 64666 must be directed to a nonprovisional application filed under 35 USC 111(a) or be a national stage entry under 35 USC 371, exclusive of any reissue applications.

In order to qualify for special status, the following requirements must be met. 1) The application must have no more than 3 independent claims and no more than 20 total claims. 2) The application must not contain any multiple dependent claims. 3) The petition must state the basis for seeking special status, i.e., the claimed invention either: A) materially enhances the quality of the environment or B) materially contributes to: i) the discovery or development of renewable energy resources, ii) the more efficient utilization and conservation of energy resources, or iii) greenhouse gas emission reduction. 4) If the disclosure is not clear on its face that the claimed invention materially contributes under category (A) or (B), the petition must be accompanied by a statement by the applicant, assignee, or an attorney/agent registered to practice before the Office explaining how the materiality standard is met. 5) A statement that applicant will agree to make an election without traverse in a telephonic interview if a restriction requirement is made by the examiner. 6) The petition to make special must be filed electronically. 7) The petition must be filed at least one day prior to the date that a first Office Action appears in the Patent Application Information Retrieval (PAIR) system. 8) The petition must be accompanied by a

request for early publication in compliance with 37 CFR 1.219 and include the publication fee as set forth in 37 CFR 1.18(d).

The requirement for a fee for consideration of the petition to make special for applications pertaining to Green Technologies has been waived.

The instant petition complies with items 1 – 8 above. Accordingly, the above-identified application has been accorded "special" status.

Telephone inquires concerning this decision should be directed to Tom Dunn at 571-272-1171.

The application is being forwarded to the Technology Center Art Unit 1700 for action on the merits commensurate with this decision.

/Tom Dunn/

Tom Dunn
Quality Assurance Specialist
Technology Center 1700

Doc Code: PET.GREEN
Document Description: Petition for Green Tech Pilot

PTO/SB/420 (12-09)
Approved for use through 05/31/2010. OMB 0651-0062
U.S. Patent and Trademark Office; U. S. DEPARTMENT OF COMMERCE
Under the Paperwork Reduction Act of 1995, no persons are required to respond to a collection of information unless it displays a valid OMB control number.

PETITION TO MAKE SPECIAL UNDER THE GREEN TECHNOLOGY PILOT PROGRAM

Attorney Docket Number: EL0985USNA	Application Number (if known): 13/100550	Filing date: May 4, 2011

First Named Inventor: Alan Frederick Carroll

Title: THICK-FILM PASTES CONTAINING LEAD-TELLURIUM-BORON-OXIDES, AND THEIR USE IN THE MANUFACTURE OF SEMICONDUCTOR DEVICES

APPLICANT HEREBY REQUESTS TO PARTICIPATE IN THE GREEN TECHNOLOGY PILOT PROGRAM FOR THE ABOVE-IDENTIFIED APPLICATION. See Instruction Sheet on page 2.

This petition must be timely filed electronically using the USPTO electronic filing system, EFS-Web.

1. By filing this petition:

   Applicant is requesting early publication: Applicant hereby requests early publication under 37 CFR 1.219 and the publication fee set forth in 37 CFR 1.18(d) accompanies this request. Applicant hereby rescinds under 37 CFR 1.213(b) any previous filed request that the above-identified application not be published under 35 U.S.C. 122(b).

   If the application has been published, the petition must still be accompanied by the publication fee set forth in 37 CFR 1.18(d) and a statement that the application has been published.

2. By filing this petition: applicant is agreeing to make an election without traverse in a telephonic interview and elect an invention that meets the eligibility requirement and classification requirement set forth in the notice entitled "Pilot Program for Green Technologies Including Greenhouse Gas Reduction" that was published in the Federal Register if the Office determines that the claims are not obviously directed to a single invention.

3. This request is accompanied by statements of special status for the eligibility requirement.

4. The application contains no more than three (3) independent claims and twenty (20) total claims.

5. The application does not contain any multiple dependent claims.

6. Other attachments: (1) Preliminary Amendment and (2) Statement of Special Status and Request To Participate

Signature /Sherry M. Carty/	Date June 14, 2011
Name (Print/Typed) SHERRY M. CARTY	Registration Number 51,534

***Note**: Signatures of all the inventors or assignees of record of the entire interest or their representative(s) are required in accordance with 37 CFR 1.33 and 11.18. Please see 37 CFR 1.4(d) for the form of the signature. If necessary, submit multiple forms for more than one signature, see below*.*

▩ *Total of 1 forms are submitted.

The information is required to obtain or retain a benefit by the public which is to file (and by the USPTO to process) an application. Confidentiality is governed by 35 U.S.C. 122 and 37 CFR 1.11 and 1.14. This collection is estimated to take 12 hours to complete, including gathering, preparing, and submitting the completed application form to the USPTO. Time will vary depending upon the individual case. Any comments on the amount of time you require to complete this form and/or suggestions for reducing this burden, should be sent to the Chief Information Officer, U.S. Patent and Trademark Office, U.S. Department of Commerce, P.O. Box 1450, Alexandria, VA 22313-1450. DO NOT SEND FEES OR COMPLETED FORMS TO THIS ADDRESS. **SEND TO: Commissioner for Patents, P.O. Box 1450, Alexandria, VA 22313-1450.**

If you need assistance in completing the form, call 1-800-PTO-9199 and select option 2.

PATENT

IN THE UNITED STATES PATENT AND TRADEMARK OFFICE

IN THE APPLICATION OF:

CARROLL ET AL.

CASE NO.:	EL0985 US NA	APPLICATION NO.:	13/100550
CONFIRMATION NO.:	3209	GROUP ART UNIT:	
EXAMINER:		FILED:	MAY 4, 2011

FOR: THICK-FILM PASTES CONTAINING LEAD-TELLURIUM-BORON-OXIDES, AND THEIR USE IN THE MANUFACTURE OF SEMICONDUCTOR DEVICES

PETITION TO MAKE SPECIAL

STATEMENT OF SPECIAL STATUS AND REQUEST TO PARTICIPATE IN THE GREEN TECHNOLOGY PILOT PROGRAM

VIA EFS-WEB

Commissioner for Patents
P.O. Box 1450
Alexandria, VA 22313-1450

Dear Sir,

Submitted herewith is the completed USPTO form PTO/SB/420 and a Petition to Make Special pursuant to the Federal Register Notice of December 8, 2009, vol. 74, No 234, pages 64666-64668, to participate in the Green Technology Pilot Program as described in said Notice.

The above-referenced application has not been published. In accordance with the requirements for the Pilot Program, we request early publication of this application. Please charge Deposit Account No. 04-1928 (E.I. du Pont de Nemours and Company) for the publication fee set forth in 37 CFR 1.18(d).

Applicants submit that the application relates to the development of solar cell electrodes, and as such, the claimed invention materially contributes to the discovery or development of renewable energy resources.

If participation in the Green Technology Pilot Program is granted, Applicants hereby agree to make an election without traverse in a telephonic interview and elect an invention that meets the eligibility requirement and classification requirement set forth in the notice entitled "Pilot Program for Green Technologies Including Greenhouse Gas Reduction" that was published in the Federal Register if the Office determines that the claims are not obviously directed to a single invention.

Filed concurrently with this petition is a Preliminary Amendment in compliance with 37 CFR 1.121. Upon entry of the amendment, the application will contain no more than three independent claims and twenty total claims and will not contain any multiple dependent claims.

If any additional fees are required, please charge Deposit Account No. 04-1928 (E.I. du Pont de Nemours and Company).

Respectfully submitted,

/Sherry M. Carty/

SHERRY M. CARTY
ATTORNEY/AGENT FOR APPLICANTS
Registration No.: 51,534
Telephone: 919-248-5310
Facsimile: (302) 355-3982

Dated: June 14, 2011

UNITED STATES PATENT AND TRADEMARK OFFICE

UNITED STATES DEPARTMENT OF COMMERCE
United States Patent and Trademark Office
Address: COMMISSIONER FOR PATENTS
P.O. Box 1450
Alexandria, Virginia 22313-1450
www.uspto.gov

APPLICATION NO.	FILING DATE	FIRST NAMED INVENTOR	ATTORNEY DOCKET NO.	CONFIRMATION NO.
13/100,550	05/04/2011	Alan Frederick Carroll	EL0985USNA	3209

23906 7590 08/22/2011

E I DU PONT DE NEMOURS AND COMPANY
LEGAL PATENT RECORDS CENTER
BARLEY MILL PLAZA 25/1125
4417 LANCASTER PIKE
WILMINGTON, DE 19805

EXAMINER	
ART UNIT	PAPER NUMBER
1725	

NOTIFICATION DATE	DELIVERY MODE
08/22/2011	ELECTRONIC

Please find below and/or attached an Office communication concerning this application or proceeding.

The time period for reply, if any, is set in the attached communication.

Notice of the Office communication was sent electronically on above-indicated "Notification Date" to the following e-mail address(es):

PTO-Legal.PRC@usa.dupont.com

UNITED STATES PATENT AND TRADEMARK OFFICE

Commissioner for Patents
United States Patent and Trademark Office
P.O. Box 1450
Alexandria, VA 22313-1450
www.uspto.gov

E I DU PONT DE NEMOURS AND COMPANY
LEGAL PATENT RECORDS CENTER
BARLEY MILL PLAZA 25/1125
4417 LANCASTER PIKE
WILMINGTON DE 19805

In re Application of	:	
Alan F. Carroll et al.	:	DECISION ON PETITION
Application No. 13/100,550	:	TO MAKE SPECIAL UNDER
Filed: May 04, 2011	:	THE GREEN TECHNOLOGY
Attorney Docket No. EL0985USNA	:	PILOT PROGRAM

This is a decision on the petition under 37 CFR 1.102, filed June 14, 2011, to make the above-identified application special under the pilot program for applications pertaining to Green Technologies as set forth in 74 Federal Register Notice 64666 (December 8, 2009) and amended by 75 Federal Register Notice 28554 (May 21, 2010) and 75 Federal Register Notice 69049 (November 10, 2010).

The petition is **GRANTED**.

A grantable petition to make an application special under 37 CFR 1.102 and the pilot program as set forth in 74 FR 64666 must be directed to a nonprovisional application filed under 35 USC 111(a) or be a national stage entry under 35 USC 371, exclusive of any reissue applications.

In order to qualify for special status, the following requirements must be met. 1) The application must have no more than 3 independent claims and no more than 20 total claims. 2) The application must not contain any multiple dependent claims. 3) The petition must state the basis for seeking special status, i.e., the claimed invention either: A) materially enhances the quality of the environment or B) materially contributes to: i) the discovery or development of renewable energy resources, ii) the more efficient utilization and conservation of energy resources, or iii) greenhouse gas emission reduction. 4) If the disclosure is not clear on its face that the claimed invention materially contributes under category (A) or (B), the petition must be accompanied by a statement by the applicant, assignee, or an attorney/agent registered to practice before the Office explaining how the materiality standard is met. 5) A statement that applicant will agree to make an election without traverse in a telephonic interview if a restriction requirement is made by the examiner. 6) The petition to make special must be filed electronically. 7) The petition must be filed at least one day prior to the date that a first Office Action appears in the Patent Application Information Retrieval (PAIR) system. 8) The petition must be accompanied by a request for early publication in compliance with 37 CFR 1.219 and include the publication fee as set forth in 37 CFR 1.18(d).

The requirement for a fee for consideration of the petition to make special for applications pertaining to Green Technologies has been waived.

The instant petition complies with items 1 – 8 above. Accordingly, the above-identified application has been accorded "special" status.

Telephone inquires concerning this decision should be directed to Blaine Copenheaver at 571-272-1156.

The application is being forwarded to the examiner for action on the merits commensurate with this decision.

/Blaine Copenheaver/

Blaine Copenheaver
Quality Assurance Specialist
Technology Center 1700

UNITED STATES PATENT AND TRADEMARK OFFICE

Commissioner for Patents
United States Patent and Trademark Office
P.O. Box 1450
Alexandria, VA 22313-1450
www.uspto.gov

MAILED
JAN 12 2012
OFFICE OF PETITIONS

FULBRIGHT & JAWORSKI L.L.P.
Attn: MN IP Docket
98 San Jacinto Boulevard
Suite 1100
Austin TX 78701-4255

In re Application of	:
Ferenc, et al.	:
Application No. 13/100,562	: DECISION ON REQUEST
Filed: May 4, 2011	: UNDER 37 CFR 5.25
Attorney Docket No. **RSWP.P0004US**	:

Title: METHOD FOR PRODUCING A CONNECTION FOR A MOTOR VEHICLE SEAT AND CONNECTION FOR A MOTOR VEHICLE SEAT

This is a decision on the petition pursuant to 37 C.F.R. § 5.25, filed May 23, 2011, seeking a retroactive license for foreign filing under 35 U.S.C. § 184.

The petition is **DISMISSED.**

37 CFR § 5.25 requires the following:

1. A listing of each foreign country in which the unlicensed patent application material was filed.
2. The dates on which the material was filed in each country,
3. A verified statement (oath or declaration) containing:
   i. An averment that the subject matter in question was not under a secrecy order at the time it was filed abroad, and that it is not currently under a secrecy order.
   ii. A showing that the license has been diligently sought after discovery of the proscribed foreign filing, and
   iii. An explanation of why the material was filed abroad through error and without deceptive intent without the required license under § 5.11 first having been obtained, and
4. The required fee (§ 1.17(g).

In re Application No. 13/100,562

The petition is dismissed at this time since the requirements of 37 CFR 5.25(a)(3)(iii) have not been fully met. More specifically, 37 CFR 5.25(a)(3)(iii) requires a showing that the proscribed filing was filed abroad through error and without deceptive intent. The "Declaration in Support of Petition for Retroactive Foreign Filing License Pursuant to 37 CFR 5.25" offered by Dr. Daniel Ulrich states, in pertinent part:

> ...I have diligently investigated whether a foreign filing license was required by investigating the facts related to the situation. From that investigation it was concluded that the material was filed abroad through error and without deceptive intent without first obtaining the required license due to the fact that the inventor of Brose, Mr. Sebastian Moser, was formerly known as an engineer being located in Germany. Hence, a German patent application had been filed by brose Fahrzeugteile GmbH & Co., KG, Coburg as the priority as usual.

Excerpt taken from "Declaration in Support of Petition for Retroactive Foreign Filing License Pursuant to 37 CFR 5.25", filed May 23, 2011, p.5.

It is noted that the "error" resulting in the proscribed foreign filing based on the alleged incorrect information concerning the residency of **one** of the multiple inventors is not within the meaning of "error" as provided in 37 CFR 5.25(a)(3)(iii), and further explanation is required as to why the material was filed abroad through error and without deceptive intent without the required license under § 5.11 first having been obtained. Petitioner is reminded that said explanation should be offered by a person who has first-hand knowledge of the circumstances surrounding the proscribed filing.

Accordingly, the provisions of 37 CFR § 5.25 have not been fully met. The petition is dismissed. In the absence of response within 60 days of the mailing date of this decision, such dismissal will be made final and the final action under 35 U.S.C. 185 will be taken. Extensions of time may be obtained under 37 CFR 1.136(a).

Further correspondence with respect to this matter should be addressed as follows:

By mail: Commissioner for Patents
United States Patent and Trademark Office
Box 1450
Alexandria, VA 22313-1450

By facsimile: (571) 273-8300
Attn: Office of Petitions

In re Application No. 13/100,562

Telephone inquiries should be directed to, Kenya A. McLaughlin, Petitions Attorney, at (571) 272-3222.

/ Ramesh Krishnamurthy/
Ramesh Krishnamurthy
Petitions Examiner
Office of Petitions

PATENT

IN THE UNITED STATES PATENT AND TRADEMARK OFFICE

IN THE APPLICATION OF:

CARROLL ET AL.

CASE NO.: EL0988 US NA APPLICATION NO.: 13/100563

CONFIRMATION NO.: 3242 GROUP ART UNIT:

EXAMINER: FILED: MAY 4, 2011

FOR: THICK-FILM PASTES CONTAINING LEAD-TELLURIUM-LITHIUM- OXIDES, AND THEIR USE IN THE MANUFACTURE OF SEMICONDUCTOR DEVICES

PETITION TO MAKE SPECIAL

STATEMENT OF SPECIAL STATUS AND REQUEST TO PARTICIPATE IN THE GREEN TECHNOLOGY PILOT PROGRAM

VIA EFS-WEB

Commissioner for Patents
P.O. Box 1450
Alexandria, VA 22313-1450

Dear Sir,

Submitted herewith is the completed USPTO form PTO/SB/420 and a Petition to Make Special pursuant to the Federal Register Notice of December 8, 2009, vol. 74, No 234, pages 64666-64668, to participate in the Green Technology Pilot Program as described in said Notice.

The above-referenced application has not been published. In accordance with the requirements for the Pilot Program, we request early publication of this application. Please charge Deposit Account No. 04-1928 (E.I. du Pont de Nemours and Company) for the publication fee set forth in 37 CFR 1.18(d).

Applicants submit that the application relates to the development of solar cell electrodes, and as such, the claimed invention materially contributes to the discovery or development of renewable energy resources.

If participation in the Green Technology Pilot Program is granted, Applicants hereby agree to make an election without traverse in a telephonic interview and elect an invention that meets the eligibility requirement and classification requirement set forth in the notice entitled "Pilot Program for Green Technologies Including Greenhouse Gas Reduction" that was published in the Federal Register if the Office determines that the claims are not obviously directed to a single invention.

The application contains no more than three independent claims and twenty total claims and does not contain any multiple dependent claims.

If any additional fees are required, please charge Deposit Account No. 04-1928 (E.I. du Pont de Nemours and Company).

.

Respectfully submitted,

/Sherry M. Carty/

SHERRY M. CARTY
ATTORNEY/AGENT FOR APPLICANTS
Registration No.: 51,534
Telephone: 919-248-5310
Facsimile: (302) 355-3982

Dated: June 14, 2011

Doc Code: PET.GREEN
Document Description: Petition for Green Tech Pilot

PTO/SB/420 (12-09)
Approved for use through 05/31/2010. OMB 0651-0062
U.S. Patent and Trademark Office; U. S. DEPARTMENT OF COMMERCE
Under the Paperwork Reduction Act of 1995, no persons are required to respond to a collection of information unless it displays a valid OMB control number.

PETITION TO MAKE SPECIAL UNDER THE GREEN TECHNOLOGY PILOT PROGRAM

Attorney Docket Number: EL0988USNA	Application Number (if known): 13/100563	Filing date: May 4, 2011

First Named Inventor: Alan Frederick Carroll

Title: THICK-FILM PASTES CONTAINING LEAD-TELLURIUM-LITHIUM- OXIDES, AND THEIR USE IN THE MANUFACTURE OF SEMICONDUCTOR DEVICES

APPLICANT HEREBY REQUESTS TO PARTICIPATE IN THE GREEN TECHNOLOGY PILOT PROGRAM FOR THE ABOVE-IDENTIFIED APPLICATION. See Instruction Sheet on page 2.

This petition must be timely filed electronically using the USPTO electronic filing system, EFS-Web.

1. By filing this petition:

   Applicant is requesting early publication: Applicant hereby requests early publication under 37 CFR 1.219 and the publication fee set forth in 37 CFR 1.18(d) accompanies this request. Applicant hereby rescinds under 37 CFR 1.213(b) any previous filed request that the above-identified application not be published under 35 U.S.C. 122(b).

   If the application has been published, the petition must still be accompanied by the publication fee set forth in 37 CFR 1.18(d) and a statement that the application has been published.

2. By filing this petition: applicant is agreeing to make an election without traverse in a telephonic interview and elect an invention that meets the eligibility requirement and classification requirement set forth in the notice entitled "Pilot Program for Green Technologies Including Greenhouse Gas Reduction" that was published in the Federal Register if the Office determines that the claims are not obviously directed to a single invention.

3. This request is accompanied by statements of special status for the eligibility requirement.

4. The application contains no more than three (3) independent claims and twenty (20) total claims.

5. The application does not contain any multiple dependent claims.

6. Other attachments: (1) Statement of Special Status and Request To Participate

Signature /Sherry M. Carty/	Date June 14, 2011
Name (Print/Typed) SHERRY M. CARTY	Registration Number 51,534

***Note**: Signatures of all the inventors or assignees of record of the entire interest or their representative(s) are required in accordance with 37 CFR 1.33 and 11.18. Please see 37 CFR 1.4(d) for the form of the signature. If necessary, submit multiple forms for more than one signature, see below*.*

☒ *Total of 1 forms are submitted.

The information is required to obtain or retain a benefit by the public which is to file (and by the USPTO to process) an application. Confidentiality is governed by 35 U.S.C. 122 and 37 CFR 1.11 and 1.14. This collection is estimated to take 12 hours to complete, including gathering, preparing, and submitting the completed application form to the USPTO. Time will vary depending upon the individual case. Any comments on the amount of time you require to complete this form and/or suggestions for reducing this burden, should be sent to the Chief Information Officer, U.S. Patent and Trademark Office, U.S. Department of Commerce, P.O. Box 1450, Alexandria, VA 22313-1450. DO NOT SEND FEES OR COMPLETED FORMS TO THIS ADDRESS. **SEND TO: Commissioner for Patents, P.O. Box 1450, Alexandria, VA 22313-1450.**

If you need assistance in completing the form, call 1-800-PTO-9199 and select option 2.

UNITED STATES PATENT AND TRADEMARK OFFICE

UNITED STATES DEPARTMENT OF COMMERCE
United States Patent and Trademark Office
Address: COMMISSIONER FOR PATENTS
P.O. Box 1450
Alexandria, Virginia 22313-1450
www.uspto.gov

APPLICATION NO.	FILING DATE	FIRST NAMED INVENTOR	ATTORNEY DOCKET NO.	CONFIRMATION NO.
13/100,563	05/04/2011	Alan Frederick Carroll	EL0988USNA	3242

23906 7590 09/20/2011

E I DU PONT DE NEMOURS AND COMPANY
LEGAL PATENT RECORDS CENTER
BARLEY MILL PLAZA 25/1125
4417 LANCASTER PIKE
WILMINGTON, DE 19805

EXAMINER	
ART UNIT	PAPER NUMBER
1761	

NOTIFICATION DATE	DELIVERY MODE
09/20/2011	ELECTRONIC

Please find below and/or attached an Office communication concerning this application or proceeding.

The time period for reply, if any, is set in the attached communication.

Notice of the Office communication was sent electronically on above-indicated "Notification Date" to the following e-mail address(es):

PTO-Legal.PRC@usa.dupont.com

UNITED STATES PATENT AND TRADEMARK OFFICE

Commissioner for Patents
United States Patent and Trademark Office
P.O. Box 1450
Alexandria, VA 22313-1450
www.uspto.gov

9/20/11

E I DU PONT DE NEMOURS AND COMPANY
LEGAL PATENT RECORDS CENTER
BARLEY MILL PLAZA 25/1125
4417 LANCASTER PIKE
WILMINGTON DE 19805

In re Application of	:	
Carroll et al.	:	DECISION ON PETITION
Application No. 13/100,563	:	TO MAKE SPECIAL UNDER
Filed: 5/4/2011	:	THE GREEN TECHNOLOGY
Attorney Docket No. **EL0988USNA**	:	PILOT PROGRAM

This is a decision on the petition under 37 CFR 1.102, filed 6/14/2011, to make the above-identified application special under the pilot program for applications pertaining to Green Technologies as set forth in 74 Federal Register Notice 64666 (December 8, 2009) and amended by 75 Federal Register Notice 28554 (May 21, 2010) and 75 Federal Register Notice 69049 (November 10, 2010).

The petition is **GRANTED**.

A grantable petition to make an application special under 37 CFR 1.102 and the pilot program as set forth in 74 FR 64666 must be directed to a nonprovisional application filed under 35 USC 111(a) or be a national stage entry under 35 USC 371, exclusive of any reissue applications.

In order to qualify for special status, the following requirements must be met. 1) The application must have no more than 3 independent claims and no more than 20 total claims. 2) The application must not contain any multiple dependent claims. 3) The petition must state the basis for seeking special status, i.e., the claimed invention either: A) materially enhances the quality of the environment or B) materially contributes to: i) the discovery or development of renewable energy resources, ii) the more efficient utilization and conservation of energy resources, or iii) greenhouse gas emission reduction. 4) If the disclosure is not clear on its face that the claimed invention materially contributes under category (A) or (B), the petition must be accompanied by a statement by the applicant, assignee, or an attorney/agent registered to practice before the Office explaining how the materiality standard is met. 5) A statement that applicant will agree to make an election without traverse in a telephonic interview if a restriction requirement is made by the examiner. 6) The petition to make special must be filed electronically. 7) The petition must be filed at least one day prior to the date that a first Office Action appears in the Patent Application Information Retrieval (PAIR) system. 8) The petition must be accompanied by a

request for early publication in compliance with 37 CFR 1.219 and include the publication fee as set forth in 37 CFR 1.18(d).

The requirement for a fee for consideration of the petition to make special for applications pertaining to Green Technologies has been waived.

The instant petition complies with items 1 – 8 above. Accordingly, the above-identified application has been accorded "special" status.

Telephone inquires concerning this decision should be directed to Tom Dunn at 571-272-1171.

The application is being forwarded to the Technology Center Art Unit 1761 for action on the merits commensurate with this decision.

/Tom Dunn/

Tom Dunn
Quality Assurance Specialist
Technology Center 1700

Doc Code: PET.GREEN
Document Description: Petition for Green Tech Pilot

PTO/SB/420 (12-09)
Approved for use through 05/31/2010. OMB 0651-0062
U.S. Patent and Trademark Office; U. S. DEPARTMENT OF COMMERCE
Under the Paperwork Reduction Act of 1995, no persons are required to respond to a collection of information unless it displays a valid OMB control number.

PETITION TO MAKE SPECIAL UNDER THE GREEN TECHNOLOGY PILOT PROGRAM

Attorney Docket Number: CL5111USNA	Application Number (if known): 13/100619	Filing date: May 4, 2011

First Named Inventor: Kurt Richard Mikeska

Title: THICK-FILM PASTES AND SOLAR CELLS MADE THEREFROM

APPLICANT HEREBY REQUESTS TO PARTICIPATE IN THE GREEN TECHNOLOGY PILOT PROGRAM FOR THE ABOVE-IDENTIFIED APPLICATION. See Instruction Sheet on page 2.

This petition must be timely filed electronically using the USPTO electronic filing system, EFS-Web.

1. By filing this petition:

   Applicant is requesting early publication: Applicant hereby requests early publication under 37 CFR 1.219 and the publication fee set forth in 37 CFR 1.18(d) accompanies this request. Applicant hereby rescinds under 37 CFR 1.213(b) any previous filed request that the above-identified application not be published under 35 U.S.C. 122(b).

   If the application has been published, the petition must still be accompanied by the publication fee set forth in 37 CFR 1.18(d) and a statement that the application has been published.

2. By filing this petition: applicant is agreeing to make an election without traverse in a telephonic interview and elect an invention that meets the eligibility requirement and classification requirement set forth in the notice entitled "Pilot Program for Green Technologies Including Greenhouse Gas Reduction" that was published in the Federal Register if the Office determines that the claims are not obviously directed to a single invention.

3. This request is accompanied by statements of special status for the eligibility requirement.

4. The application contains no more than three (3) independent claims and twenty (20) total claims.

5. The application does not contain any multiple dependent claims.

6. Other attachments: (1) Preliminary Amendment and (2) Statement of Special Status and Request To Participate

Signature /Charles W. Haas/	Date 6/14/11
Name (Print/Typed) CHARLES W. HAAS	Registration Number 35,173

***Note**: Signatures of all the inventors or assignees of record of the entire interest or their representative(s) are required in accordance with 37 CFR 1.33 and 11.18. Please see 37 CFR 1.4(d) for the form of the signature. If necessary, submit multiple forms for more than one signature, see below*.*

▩ *Total of 1 forms are submitted.

The information is required to obtain or retain a benefit by the public which is to file (and by the USPTO to process) an application. Confidentiality is governed by 35 U.S.C. 122 and 37 CFR 1.11 and 1.14. This collection is estimated to take 12 hours to complete, including gathering, preparing, and submitting the completed application form to the USPTO. Time will vary depending upon the individual case. Any comments on the amount of time you require to complete this form and/or suggestions for reducing this burden, should be sent to the Chief Information Officer, U.S. Patent and Trademark Office, U.S. Department of Commerce, P.O. Box 1450, Alexandria, VA 22313-1450. DO NOT SEND FEES OR COMPLETED FORMS TO THIS ADDRESS. **SEND TO: Commissioner for Patents, P.O. Box 1450, Alexandria, VA 22313-1450.**

If you need assistance in completing the form, call 1-800-PTO-9199 and select option 2.

PATENT

IN THE UNITED STATES PATENT AND TRADEMARK OFFICE

IN THE APPLICATION OF:

MIKESKA ET AL.

CASE NO.:	CL5111 US NA	APPLICATION NO.:	13/100619
CONFIRMATION NO.:	3359	GROUP ART UNIT:1784	
EXAMINER:	NOT YET ASSIGNED	FILED:	MAY 4, 2011

FOR: THICK-FILM PASTES AND SOLAR CELLS MADE THEREFROM

PETITION TO MAKE SPECIAL

STATEMENT OF SPECIAL STATUS AND REQUEST TO PARTICIPATE IN THE GREEN TECHNOLOGY PILOT PROGRAM

VIA EFS-WEB

Commissioner for Patents
P.O. Box 1450
Alexandria, VA 22313-1450

Dear Sir,

Submitted herewith is the completed USPTO form PTO/SB/420 and a Petition to Make Special pursuant to the Federal Register Notice of December 8, 2009, vol. 74, No 234, pages 64666-64668, to participate in the Green Technology Pilot Program as described in said Notice.

The above reference has not been published. Applicant is requesting early publication under 37 CFR 1.129. In accordance with the requirements for the Pilot Program, please charge Deposit Account No. 04-1928 (E. I. DuPont de Nemours and Company) for the publication fee set forth in 37 CFR 1.18(d).

Applicants submit that the application is directed to an invention that relates to thick film pastes and processes for using these pastes to make solar cell contacts. The claimed invention materially contributes to making solar cells more affordable while providing improved performance properties and thereby

materially contributes to the discovery or development of renewable energy resources.

If participation in the Green Technology Pilot Program is granted, Applicants hereby agree to make an election without traverse in a telephonic interview and elect an invention that meets the eligibility requirement and classification requirement set forth in the notice entitled "Pilot Program for Green Technologies Including Greenhouse Gas Reduction" that was published in the Federal Register if the Office determines that the claims are not obviously directed to a single invention.

Filed concurrently with this petition is a Preliminary Amendment in compliance with 37 CFR 1.121. Upon entry of the amendment, the application will contain no more than three independent claims and twenty total claims and will not contain any multiple dependent claims.

If any additional fees are required, please charge Deposit Account No. 04-1928 (E.I. du Pont de Nemours and Company).

Respectfully submitted,

/Charles W. Haas/
CHARLES W. HAAS
CONTRACT ATTORNEY/AGENT
FOR APPLICANTS
Registration No.: 35,173
Telephone: 302-892-8822
Facsimile: (302) 355-3982

Dated: June 14, 2011

UNITED STATES PATENT AND TRADEMARK OFFICE

UNITED STATES DEPARTMENT OF COMMERCE
United States Patent and Trademark Office
Address: COMMISSIONER FOR PATENTS
P.O. Box 1450
Alexandria, Virginia 22313-1450
www.uspto.gov

APPLICATION NO.	FILING DATE	FIRST NAMED INVENTOR	ATTORNEY DOCKET NO.	CONFIRMATION NO.
13/100,619	05/04/2011	KURT RICHARD MIKESKA	CL5111USNA	3359

23906 7590 07/14/2011

E I DU PONT DE NEMOURS AND COMPANY
LEGAL PATENT RECORDS CENTER
BARLEY MILL PLAZA 25/1125
4417 LANCASTER PIKE
WILMINGTON, DE 19805

EXAMINER	
ART UNIT	PAPER NUMBER
1784	

NOTIFICATION DATE	DELIVERY MODE
07/14/2011	ELECTRONIC

Please find below and/or attached an Office communication concerning this application or proceeding.

The time period for reply, if any, is set in the attached communication.

Notice of the Office communication was sent electronically on above-indicated "Notification Date" to the following e-mail address(es):

PTO-Legal.PRC@usa.dupont.com

UNITED STATES PATENT AND TRADEMARK OFFICE

Commissioner for Patents
United States Patent and Trademark Office
P.O. Box 1450
Alexandria, VA 22313-1450
www.uspto.gov

E I DU PONT DE NEMOURS AND COMPANY
LEGAL PATENT RECORDS CENTER
BARLEY MILL PLAZA 25/1125
4417 LANCASTER PIKE
WILMINGTON DE 19805

JUL 14 2011

In re Application of :
MIKESKA, KURT RICHARD :
Application No. 13/100,619 :
Filed: 05/04/2011 :
Attorney Docket No. CL5111USNA :

DECISION ON PETITION
TO MAKE SPECIAL UNDER
THE GREEN TECHNOLOGY
PILOT PROGRAM

This is a decision on the petition under 37 CFR 1.102, filed June 14, 2011, to make the above-identified application special under the pilot program for applications pertaining to Green Technologies as set forth in 74 Federal Register Notice 64666 (December 8, 2009) and amended by 75 Federal Register Notice 28554 (May 21, 2010) and 75 Federal Register Notice 69049 (November 10, 2010).

The petition is **GRANTED**.

A grantable petition to make an application special under 37 CFR 1.102 and the pilot program as set forth in 74 FR 64666 must be directed to a nonprovisional application filed under 35 USC 111(a) or be a national stage entry under 35 USC 371, exclusive of any reissue applications.

In order to qualify for special status, the following requirements must be met. 1) The application must have no more than 3 independent claims and no more than 20 total claims. 2) The application must not contain any multiple dependent claims. 3) The petition must state the basis for seeking special status, i.e., the claimed invention either: A) materially enhances the quality of the environment or B) materially contributes to: i) the discovery or development of renewable energy resources, ii) the more efficient utilization and conservation of energy resources, or iii) greenhouse gas emission reduction. 4) If the disclosure is not clear on its face that the claimed invention materially contributes under category (A) or (B), the petition must be accompanied by a statement by the applicant, assignee, or an attorney/agent registered to practice before the Office explaining how the materiality standard is met. 5) A statement that applicant will agree to make an election without traverse in a telephonic interview if a restriction requirement is made by the examiner. 6) The petition to make special must be filed electronically. 7) The petition must be filed at least one day prior to the date that a first Office Action appears in the Patent Application Information Retrieval (PAIR) system. 8) The petition must be accompanied by a

request for early publication in compliance with 37 CFR 1.219 and include the publication fee as set forth in 37 CFR 1.18(d).

The requirement for a fee for consideration of the petition to make special for applications pertaining to Green Technologies has been waived.

The instant petition complies with items 1 – 8 above. Accordingly, the above-identified application has been accorded "special" status.

Telephone inquires concerning this decision should be directed to Tom Dunn at 571-272-1171.

The application is being forwarded to the Technology Center Art Unit 1784 for action on the merits commensurate with this decision.

/Tom Dunn/

Tom Dunn
Quality Assurance Specialist
Technology Center 1700

Doc Code: PPH.PCT.652

Document Description: Petition to make special under PCT-Patent Pros Hwy

PTO/SB/20PCT-EP (05-10)
Approved for use through 01/31/2015. OMB 0651-0058
U.S. Patent and Trademark Office; U.S DEPARTMENT OF COMMERCE
Under the Paperwork Reduction Act of 1995, no persons are required to respond to a collection of information unless it displays a valid OMB control number.

REQUEST FOR PARTICIPATION IN THE PATENT COOPERATION TREATY – PATENT PROSECUTION HIGHWAY (PCT-PPH) PILOT PROGRAM BETWEEN THE EUROPEAN PATENT OFFICE (EPO) AND THE USPTO

Application No.:	13/100,657	First Named Inventor:	CHEN, Xiying
Filing Date:	5/04/2011	Attorney Docket No.:	3590-311DIV
Title of the Invention:	Improved Electrode Diffusions in Two-Terminal Non-Volatile Memory Devices		

THIS REQUEST FOR PARTICIPATION IN THE PCT-PPH PILOT PROGRAM ALONG WITH THE REQUIRED DOCUMENTS MUST BE SUBMITTED VIA EFS-WEB. INFORMATION REGARDING EFS-WEB IS AVAILABLE AT HTTP://WWW.USPTO.GOV/EBC/EFS_HELP.HTML.

APPLICANT HEREBY REQUESTS PARTICIPATION IN THE PCT-PPH PILOT PROGRAM AND PETITIONS TO MAKE THE ABOVE-IDENTIFIED APPLICATION SPECIAL UNDER THE PCT-PPH PILOT PROGRAM.

The above-identified application is (1) a national stage entry of the corresponding PCT application, or (2) a national stage entry of another PCT application which claims priority to the corresponding PCT application, or (3) a national application that claims domestic/ foreign priority to the corresponding PCT application, or (4) a national application which forms the basis for the priority claim in the corresponding PCT application, or (5) a continuing application of a U.S. application that satisfies one of (1) to (4) above, or (6) a U.S. application that claims domestic benefit to a U.S. provisional application which forms the basis for the priority claim in the corresponding PCT application.

The corresponding PCT application number(s) is/are: PCT/US10/38130

The international filing date of the corresponding PCT application(s) is/are: 6/10/2010

I. List of Required Documents:

a. **A copy of the latest international work product (WO/ISA, WO/IPEA, or IPER) in the above-identified corresponding PCT application(s)**

☑ is attached.

☐ is not attached because the document is already in the U.S. application.

b. **A copy of all claims which were indicated as having novelty, inventive step and industrial applicability in the above-identified corresponding PCT application(s)**

☑ is attached.

☐ is not attached because the document is already in the U.S. application.

c. **English translations of the documents in a. and b. above are attached (if the documents are not in the English language). A statement that the English translation is accurate is attached for the document in b. above.**

d. **(1) An information disclosure statement listing the documents cited in the international work products (ISR, WO/ISA, WO/IPEA, IPER) of the corresponding PCT application.**

☐ is attached.

☑ has already been filed in the above-identified U.S. application on 5/04/2011

(2) Copies of all documents (except for U.S. patents or U.S. patent application publications)

☑ are attached.

☐ have already been filed in the above-identified U.S. application on _____

This collection of information is required by 35 U.S.C. 119, 37 CFR 1.55, and 37 CFR 1.102(d). The information is required to obtain or retain a benefit by the public, which is to file (and by the USPTO to process) an application. Confidentiality is governed by 35 U.S.C. 122 and 37 CFR 1.11 and 1.14. This collection is estimated to take 2 hours to complete, including gathering, preparing, and submitting the completed application form to the USPTO. Time will vary depending upon the individual case. Any comments on the amount of time you require to complete this form and/or suggestions for reducing this burden should be sent to the Chief Information Officer, U.S. Patent and Trademark Office, U.S. Department of Commerce, P.O. Box 1450, Alexandria, VA 22313-1450. DO NOT SEND FEES OR COMPLETED FORMS TO THIS ADDRESS.

PTO/SB/20PCT-EP (05-10)
Approved for use through 01/31/2015. OMB 0651-0058
U.S. Patent and Trademark Office; U.S DEPARTMENT OF COMMERCE
Under the Paperwork Reduction Act of 1995, no persons are required to respond to a collection of information unless it displays a valid OMB control number.

REQUEST FOR PARTICIPATION IN THE PCT-PPH PILOT PROGRAM BETWEEN THE EPO AND THE USPTO

(continued)

Application No.:	13/100,657	First Named Inventor:	CHEN, Xiying

II. Claims Correspondence Table:

Claims in US Application	Patentable Claims in the corresponding PCT application	Explanation regarding the correspondence
1	1, 8-9	US claim 1 is substantially similar to PCT claims 1, 8 and 9.
2	2, 9	US claim 2 is substantially similar to PCT claims 2 and 9.
3	3, 9	US claim 3 is substantially similar to PCT claims 3 and 9.
4	2-4, 9	US claim 4 is substantially similar to PCT claims 2-4 and 9.
5-6	5-6	US claims 5-6 are identical to PCT claims 5-6.
9	7	US claim 9 is identical to PCT claim 7.
10	10	US claim 10 is identical to PCT claim 10.
11	1	US claim 11 is substantially similar to PCT claim 1.
14-15	4-5	US claims 14-15 are identical to PCT claims 4-5.
16	6-7	US claim 16 is substantially similar to PCT claims 6-7.
17-19	8-10	US claims 17-19 are identical to PCT claims 8-10.

III. All the claims in the US application sufficiently correspond to the patentable claims in the corresponding PCT application.

Signature	Date 4/12/12
Name (Print/Typed) Leon Radomsky	Registration Number 43445

UNITED STATES PATENT AND TRADEMARK OFFICE

UNITED STATES DEPARTMENT OF COMMERCE
United States Patent and Trademark Office
Address: COMMISSIONER FOR PATENTS
P.O. Box 1450
Alexandria, Virginia 22313-1450
www.uspto.gov

APPLICATION NO.	FILING DATE	FIRST NAMED INVENTOR	ATTORNEY DOCKET NO.	CONFIRMATION NO.
13/100,730	05/04/2011	Robert Maier	MULT0167PUSA	3586

22045 7590 09/26/2011

BROOKS KUSHMAN P.C.
1000 TOWN CENTER
TWENTY-SECOND FLOOR
SOUTHFIELD, MI 48075

EXAMINER	
ART UNIT	PAPER NUMBER
3724	

MAIL DATE	DELIVERY MODE
09/26/2011	PAPER

Please find below and/or attached an Office communication concerning this application or proceeding.

The time period for reply, if any, is set in the attached communication.

UNITED STATES PATENT AND TRADEMARK OFFICE

Commissioner for Patents
United States Patent and Trademark Office
P.O. Box 1450
Alexandria, VA 22313-1450
www.uspto.gov

BROOKS KUSHMAN P.C.
1000 TOWN CENTER
TWENTY-SECOND FLOOR
SOUTHFIELD MI 48075

In re Application of
MAIER, ROBERT , et al.
Application No. 13/100,730
Filed: May 04, 2011
Attorney Docket No. MULT0167PUSA
For: CUTTING UNIT FOR A PACKAGING MACHINE

: DECISION ON REQUEST TO
: PARTICIPATE IN PATENT
: PCT/PROSECUTION HIGHWAY
: PROGRAM AND PETITION
: TO MAKE SPECIAL UNDER
: 37 CFR 1.102(a)

This is a decision on the request to participate in the Patent Prosecution Highway (PPH) program and the petition under 37 CFR 1.102(a), filed August 26, 2011 to make the above-identified application special.

The request and petition are granted.

A grantable request to participate in the PPH pilot program and petition to make special require:

(1) The U.S. application must validly claim priority under 35 U.S.C. 119(a) to one or more applications filed in the JPO;
(2) Applicant must submit a copy of the allowable/patentable claim(s) from the JPO/PCT application(s) along with an English translation thereof and a statement that the English translation is accurate;
(3) All the claims in the U.S. application must sufficiently correspond or be amended to sufficiently correspond to the allowable/patentable claim(s) in the JPO application(s);
(4) Examination of the U.S. application has not begun;
(5) Applicant must submit a copy of all the office actions from each of the JPO/PCT application(s) containing the allowable/patentable claim(s) along with an English translation thereof and a statement that the English translation is accurate; and
(6) Applicant must submit an IDS listing the documents cited by the JPO examiner in the JPO office action along with copies of documents except U.S. patents or U.S. patent application publications.
In light of the petition being properly submitted, the request to participate in the PPH program and the petition comply with the above requirements. Accordingly, the above-identified application has been accorded "special" status.

The applicant is encouraged to cite and submit all relevant prior art references, if any, to facilitate examination in this application. Upon completion of pre-examination processing, this application will be forwarded to an examiner for examination.

Telephone inquiries concerning this decision should be directed to Henry C. Yuen at 571-272-4485. All other inquiries concerning the examination or status of the application should be directed to Boyer Ashley, SPE of Art Unit 3724, and 571-272-4502 for Class 083 and also accessible in the PAIR system at http://www.uspto.gov/ebc.index.html.

Petition is **granted**.

/Henry C. Yuen/

_____

Henry C. Yuen, Special Programs Examiner
Technology Center 3700 – Mechanical Engineering,
Manufacturing and Products
571-272-4856

PATENT
Attorney Docket No. 110048

IN THE UNITED STATES PATENT AND TRADEMARK OFFICE

APPLICANT(S):	Carsten Tembaak et al.	CONFIRMATION NO.:	
APPLICATION NO.:		GROUP NO.:	
FILING DATE:		EXAMINER:	
TITLE:	PLUGGAGE REMOVAL METHOD FOR SCR CATALYSTS AND SYSTEMS		

Commissioner for Patents
P.O. Box 1450
Alexandria, VA 22313-1450

STATEMENT IN SUPPORT OF PETITION TO MAKE SPECIAL UNDER THE GREEN TECHNOLOGY PILOT PROGRAM

Sir:

Applicants enclose a Petition to Make Special Under the Green Technology Pilot Program and the requisite publication fee of $300.

Applicants agree to make a telephonic election in response to any restriction requirement.

Applicants request special status because the claimed invention materially relates to methods for improving catalytic removal of pollutants from power plant flue gases. Although clear from the face of the application, Applicants state that the claimed invention materially relates to 1) enhancing the quality of the environment and 2) greenhouse gas emission reduction. Specifically, the claimed invention allows for the removal of particulate pluggage from a selective catalytic reduction ("SCR") catalyst. SCR catalysts are used in the exhaust stream of power plants that generate electricity by the combustion of fossil- and bio-fuels. SCR catalysts selectively reduce nitrogen oxides (NO_x) in the flue gas, converting them to nitrogen (N_2) and water. NO_x were classified as a greenhouse gas in the 1997 Kyoto Protocol and include nitric oxide (NO) and nitrogen dioxide (NO_2) which degrade the quality of the environment by reacting in the atmosphere to cause smog and acid rain. During use, the SCR catalyst typically becomes plugged with particulates, such as fly ash, which reduces the catalyst's ability to remove NO_x in the flue gas stream and can prevent effective regeneration of the SCR catalytic surfaces. The

claimed invention provides methods to remove accumulated particulates from an SCR catalyst channels and surfaces and various components of an SCR system, thereby improving ability of the SCR catalyst to remove NO_x gases from the flue gas stream and reducing the concentration of NO_x gases emitted into the atmosphere.

Please charge any additional fees required for consideration of this submission to Deposit Account No. 11-1110.

The Office is invited to call the undersigned to resolve any issues relating to this submission and to expedite granting of the petition to make special.

Respectfully submitted,

Date: May 4, 2011

Joseph L. Kent
USPTO Reg. No. 54,216

Doc Code: PET.GREEN
Document Description: Petition for Green Tech Pilot

PTO/SB/420 (03-11)

PETITION TO MAKE SPECIAL UNDER THE GREEN TECHNOLOGY PILOT PROGRAM

Attorney Docket Number: 110048	Application Number (if known):	Filing date: May 4, 2011

First Named Inventor: Carsten Tembaak

Title: PLUGGAGE REMOVAL METHOD FOR SCR CATALYSTS AND SYSTEMS

APPLICANT HEREBY REQUESTS TO PARTICIPATE IN THE GREEN TECHNOLOGY PILOT PROGRAM FOR THE ABOVE-IDENTIFIED APPLICATION. **See Instruction Sheet on page 2.**

This petition must be timely filed electronically using the USPTO electronic filing system, EFS-Web.

1. By filing this petition:

   Applicant is requesting early publication: Applicant hereby requests early publication under 37 CFR 1.219 and the publication fee set forth in 37 CFR 1.18(d) accompanies this request.

2. By filing this petition: applicant is agreeing to make an election without traverse in a telephonic interview and elect an invention that meets the eligibility requirements for the Green Technology Pilot Program, if the Office determines that the claims are not obviously directed to a single invention. See Instruction Sheet.

3. This request is accompanied by statements of special status for the eligibility requirement.

4. The application contains no more than three (3) independent claims and twenty (20) total claims.

5. The application does not contain any multiple dependent claims.

6. Other attachments: _____

Signature	Date May 4, 2011
Name (Print/Typed) Joseph L. Kent	Registration Number 54216

Note: *Signatures of all the inventors or assignees of record of the entire interest or their representative(s) are required in accordance with 37 CFR 1.33 and 11.18. Please see 37 CFR 1.4(d) for the form of the signature. If necessary, submit multiple forms for more than one signature, see below*.*

☐ *Total of 1 forms are submitted.

If you need assistance in completing the form, call 1-800-PTO-9199 and select option 2.

UNITED STATES PATENT AND TRADEMARK OFFICE

UNITED STATES DEPARTMENT OF COMMERCE
United States Patent and Trademark Office
Address: COMMISSIONER FOR PATENTS
P.O. Box 1450
Alexandria, Virginia 22313-1450
www.uspto.gov

APPLICATION NO.	FILING DATE	FIRST NAMED INVENTOR	ATTORNEY DOCKET NO.	CONFIRMATION NO.
13/100,787	05/04/2011	Carsten Tembaak	110048	3686

21878 7590 05/26/2011

K&L Gates LLP
P.O. Box 33144
CHARLOTTE, NC 28233

EXAMINER	
ART UNIT	PAPER NUMBER
1736	

MAIL DATE	DELIVERY MODE
05/26/2011	PAPER

Please find below and/or attached an Office communication concerning this application or proceeding.

The time period for reply, if any, is set in the attached communication.

UNITED STATES PATENT AND TRADEMARK OFFICE

Commissioner for Patents
United States Patent and Trademark Office
P.O. Box 1450
Alexandria, VA 22313-1450
www.uspto.gov

K&L Gates LLP
P.O. Box 33144
CHARLOTTE NC 28233

MAY 26 2011

In re Application of	:	
Tembaak et al.	:	DECISION ON PETITION
Application No. 13/100,787	:	TO MAKE SPECIAL UNDER
Filed: 5/4/2011	:	THE GREEN TECHNOLOGY
Attorney Docket No. **110048**	:	PILOT PROGRAM

This is a decision on the petition under 37 CFR 1.102, filed 5/4/2011, to make the above-identified application special under the pilot program for applications pertaining to Green Technologies as set forth in 74 Federal Register Notice 64666 (December 8, 2009) and amended by 75 Federal Register Notice 28554 (May 21, 2010) and 75 Federal Register Notice 69049 (November 10, 2010).

The petition is **GRANTED**.

A grantable petition to make an application special under 37 CFR 1.102 and the pilot program as set forth in 74 FR 64666 must be directed to a nonprovisional application filed under 35 USC 111(a) or be a national stage entry under 35 USC 371, exclusive of any reissue applications.

In order to qualify for special status, the following requirements must be met. 1) The application must have no more than 3 independent claims and no more than 20 total claims. 2) The application must not contain any multiple dependent claims. 3) The petition must state the basis for seeking special status, i.e., the claimed invention either: A) materially enhances the quality of the environment or B) materially contributes to: i) the discovery or development of renewable energy resources, ii) the more efficient utilization and conservation of energy resources, or iii) greenhouse gas emission reduction. 4) If the disclosure is not clear on its face that the claimed invention materially contributes under category (A) or (B), the petition must be accompanied by a statement by the applicant, assignee, or an attorney/agent registered to practice before the Office explaining how the materiality standard is met. 5) A statement that applicant will agree to make an election without traverse in a telephonic interview if a restriction requirement is made by the examiner. 6) The petition to make special must be filed electronically. 7) The petition must be filed at least one day prior to the date that a first Office Action appears in the Patent Application Information Retrieval (PAIR) system. 8) The petition must be accompanied by a request for early publication in compliance with 37 CFR 1.219 and include the publication fee as set forth in 37 CFR 1.18(d).

The requirement for a fee for consideration of the petition to make special for applications pertaining to Green Technologies has been waived.

The instant petition complies with items 1 – 8 above. Accordingly, the above-identified application has been accorded "special" status.

Telephone inquires concerning this decision should be directed to Tom Dunn at 571-272-1171.

The application is being forwarded to the Technology Center Art Unit 1736 for action on the merits commensurate with this decision.

/Tom Dunn/

Tom Dunn
Quality Assurance Specialist
Technology Center 1700

UNITED STATES PATENT AND TRADEMARK OFFICE

Commissioner for Patents
United States Patent and Trademark Office
P.O. Box 1450

MAILED

JAN 30 2012

OFFICE OF PETITIONS

BLAKELY SOKOLOFF TAYLOR & ZAFMAN LLP
1279 OAKMEAD PARKWAY
SUNNYVALE CA 94085-4040

In re Application of	: DECISION ON REQUEST TO
Yasuhiro KAWAMOTO et al.	: PARTICIPATE IN PPH PROGRAM
Application No. 13/100,828	: AND PETITION TO MAKE SPECIAL
Filed: May 4, 2011	: UNDER 37 CFR 1.102(a)
Atty. Docket No.: 6639P1205	:

For: INFORMATION PROCESSING APPARATUS

This is a decision on the request to participate in the Patent Prosecution Highway (PPH) program and the petition under 37 CFR 1.102(a), filed October 7, 2011 to make the above-identified application special.

The petition is **GRANTED**.

A grantable request to participate in the PPH (patent prosecution highway) program and petition to make special require:

(1) the U.S. application is a Paris Convention application which either validly claims priority under 35 U.S.C. 119(a) and 37 CFR 1.55 to one or more applications filed in the JPO (Japanese Patent Office) or claims priority to a PCT application that contains no priority claims. Alternatively, it can be a national stage application under the PCT which validly claims priority to an application filed in the JPO or claims priority to a PCT application that contains no priority claims. It can also be a "bypass application" filed under 35 U.S.C. 111(a) which validly claims benefit under 35 U.S.C. 120 to a PCT application, which PCT application validly claims priority to an application filed in the JPO or claims priority to a PCT application that contains no priority claims, or contains no priority claim;

(2) applicant must submit a copy of the allowable/patentable claim(s) from the JPO application(s) along with an English translation thereof and a statement that the English translation is accurate;

(3) all the claims in the U.S. application must sufficiently correspond or be amended to sufficiently correspond to the allowable/patentable claim(s) in the JPO application(s);

(4) examination of the U.S. application has not begun;

(5) applicant must submit a copy of all the office actions from each of the JPO application(s) containing the allowability/patentable claim(s) along with an English translation thereof and a statement that the English translation is accurate; and

(6) applicant must submit an IDS listing the documents cited by the JPO examiner in the JPO office action along with copies of documents except U.S. patents or U.S. patent application publications.

The request to participate in the PPH program and petition comply with the above requirements. Accordingly, the above-identified application has been accorded "special" status.

Telephone inquiries concerning this decision should be directed to Robert DeWitty, Petition Attorney, Office of Petitions at 571-272-8427.

All other inquiries concerning the examination or status of the application is accessible in the PAIR system at http://www.uspto.gov/ebc/index.html.

This application will be forwarded to Technology Center Art Unit 2113 for action commensurate with this decision.

David Bucci
Petitions Examiner
Office of Petitions

UNITED STATES PATENT AND TRADEMARK OFFICE

Commissioner for Patents
United States Patent and Trademark Office
P.O. Box 1450
Alexandria, VA 22313-1450
www.uspto.gov

MAILED

AUG 08 2011

PCT LEGAL ADMINISTRATION

John Alumit
16830 Ventura Blvd. Suite 360
Encino CA 91364

In re Application of:
TOKAREV, Valentin, D., et al.
U.S. Application No.: 13/100,864
Filing Date: May 04, 2011
Attorney's Docket No.: 22754-084
For: INTENSE GLASS BATCH MIXER

DECISION ON PETITION UNDER 37 CFR 1.181

This decision is issued in response to the correspondence filed by applicants on June 17, 2011, treated herein as a petition under 37 CFR 1.181 to have the present application treated as a U.S. national stage application filed under 35 U.S.C. 371. No petition fee is required.

BACKGROUND

On May 04, 2011, applicants initiated the present application using the EFS-Web electronic filing system. Among the materials filed by applicants was a "Utility Patent Application Transmittal" (Form PTO/SB/05) and a specification that indicated the present application "claims the benefit of the priority filing date of Russian application no. RU 2010117809/03." As evidenced by the Electronic Acknowledgement Receipt, during the electronic filing process, applicants identified the present application as a "Utility" application filed "under 35 U.S.C. 111(a)," not a national stage application filed under 35 U.S.C. 371. Accordingly, the application was processed by the USPTO as a filing under 35 U.S.C. 111(a).

On May 17, 2011, the USPTO mailed a filing receipt.

On June 17, 2011, applicants filed the correspondence considered as a petition herein. The petition asserts that the present application should be treated as a U.S. national stage application filed under 35 U.S.C. 371.

DISCUSSION

Applicants' petition states that the present application, among others filed by applicants, "contained a CLAIM OF PRIORITY in the SPECIFICATIONS upon filing, and were thus clearly intended to be filed under 35 U.S.C. 371 (and not 35 U.S.C. 111(a)." Applicants therefore request that the filing status of the application be corrected.

Any intended filing of an international application as a national stage application must clearly and unambiguously be identified as such and must satisfy all of the conditions set forth in 35 U.S.C. 371(c). See 37 CFR 1.495(g):

> The documents and fees submitted ... must be clearly identified as a submission to enter the national stage under 35 U.S.C. 371. Otherwise the submission will be considered as being made under 35 U.S.C. 111(a).

Section 1893.03(a) of the MPEP states (emphasis added):

> **If there are any conflicting instructions as to whether the filing is under 35 U.S.C. 111(a) or 35 U.S.C. 371, the application will be accepted as filed under 35 U.S.C. 111(a). A conflicting instruction will be present, for example, where applicant includes in the initial submission under 35 U.S.C. 371, a "Utility Patent Application Transmittal" (Form PTO/SB/05)** or includes a benefit claim under 35 U.S.C. 120 to the international application.

Here, the materials filed to initiate the present application were specifically identified during the electronic filing process as a utility application filed under 35 U.S.C. 111(a), not a national stage application filed under 35 U.S.C. 371. Moreover, the submission included a "Utility Patent Application Transmittal" (Form PTO/SB/05), which on its face states that it is for use "[o]nly for new nonprovisional applications under 37 CFR 1.53(b)" and which the MPEP expressly states is not consistent with the filing of a national stage application. Finally, the application submission did not even refer to a PCT application, as the priority claim in the specification upon which applicants rely is directed to a Russian application, not an international application filed under the PCT.

In view of the above, the application materials filed on May 04, 2011 were not "clearly identified as a submission to enter the national stage under 35 U.S.C. 371," and such materials contained multiple instructions that identified the filing as a submission under 35 U.S.C. 111(a) and were not consistent with the intent to file a national stage application under 35 U.S.C. 371. Accordingly, pursuant to the policy set forth in MPEP section 1893.03(a), the present application is properly treated by the USPTO as a filing under 35 U.S.C. 111(a). Applicants' petition to have the application converted to a filing under 35 U.S.C. 371 is therefore appropriately dismissed.

CONCLUSION

The petition under 37 CFR 1.181 to have the present application treated as a U.S. national stage filed under 35 U.S.C. 371 is **DISMISSED** without prejudice. The present application will continue to be treated as a U.S. application filed under 35 U.S.C. 111(a).

The application is being referred to the Office of Patent Application Processing (OPAP) for further processing.

/RichardMRoss/

Richard M. Ross
Attorney Advisor
Office of PCT Legal Administration
Telephone: (571) 272-3296

UNITED STATES PATENT AND TRADEMARK OFFICE

Commissioner for Patents
United States Patent and Trademark Office
P.O. Box 1450
Alexandria, VA 22313-1450
www.uspto.gov

BLAKELY SOKOLOFF
TAYLOR & ZAFMAN LLP
1279 OAKMEAD PARKWAY
SUNNYVALE CA 94085-4040

MAILED

MAR 12 2012

OFFICE OF PETITIONS

In re Application of
Masaaki Kikuchi et al
Application No.: 13/100,866
Filed: May 4, 2011
Attorney Docket No.: 6639P1206
For: ELECTRONIC APPARATUS AND METHOD FOR ASSISTING IN REMOTE CONTROL

: DECISION ON REQUEST TO
: PARTICIPATE IN THE PATENT
: PROSECUTION HIGHWAY
: PROGRAM AND PETITION
: TO MAKE SPECIAL UNDER
: 37 CFR 1.102(a)

This is a decision on the request to participate in the Patent Prosecution Highway (PPH) program and the petition under 37 CFR 1.102(a), filed December 8, 2011, to make the above-identified application special.

The request and petition are **GRANTED**.

Discussion

A grantable request to participate in the PPH pilot program and petition to make special require:

1. The U.S. application is

    a. a Paris Convention application which either
        i. validly claims priority under 35 U.S.C. 119(a) and 37 CFR 1.55 to one or more applications filed in the JPO, or
        ii. validly claims priority to a PCT application that contains no priority claims, or
    b. a national stage application under the PCT (an application which entered the national stage in the U.S. from a PCT international application after compliance with 35 U.S.C. 371), which PCT application
        i. validly claims priority to an application filed in the JPO, or
        ii. validly claims priority to a PCT application that contains no priority claims, or
        iii. contains no priority claim, or
    c. a so-called bypass application filed under 35 U.S.C. 111(a) which validly claims benefit under 35 U.S.C. 120 to a PCT application, which PCT application
        i. validly claims priority to an application filed in the JPO, or
        ii. validly claims priority to a PCT application that contains no priority claims, or
        iii. contains no priority claim;

2. Applicant must submit a copy of:
    a. The allowable/patentable claim(s) from the JPO application(s);
    b. An English translation of the allowable/patentable claim(s) and
    c. A statement that the English translation is accurate;
3. Applicant must:
    a. Ensure all the claims in the U.S. application must sufficiently correspond or be amended to sufficiently correspond to the allowable/patentable claim(s) in the JPO application(s) and
    b. Submit a claims correspondence table in English;
4. Examination of the U.S. application has not begun;
5. Applicant must submit:
    a. Documentation of prior office action:
        i. a copy of the office action(s) just prior to the "Decision to Grant a Patent" from each of the JPO application(s) containing the allowable/patentable claim(s) or
        ii. if the allowable/patentable claims(s) are from a "Notification of Reasons for Refusal" then the Notification of Reasons for Refusal or
        iii. if the JPO application is a first action allowance then no office action from the JPO is necessary should be indicated on the request/petition form;
    b. An English language translation of the JPO Office action from (5)(a)(i)-(ii) above
    c. A statement that the English translation is accurate;
6. Applicant must submit:
    a. An IDS listing the documents cited by the JPO examiner in the JPO office action (unless already submitted in this application)
    b. Copies of the documents except U.S. patents or U.S. patent application publications (unless already submitted in this application);

The request to participate in the PPH pilot program and petition comply with the above requirements. Accordingly, the above-identified application has been accorded "special" status.

Inquiries concerning this decision should be directed to Irvin Dingle at (571) 272-3210.

All other inquiries concerning the examination or status of the application is accessible in the PAIR system at http://www.uspto.gov/ebc.index.html.

This application will be forwarded to the examiner for action on the merits commensurate with this decision once this application's formality reviews have been completed.

David Bucci
Petitions Examiner
Office of Petitions

UNITED STATES PATENT AND TRADEMARK OFFICE

UNITED STATES DEPARTMENT OF COMMERCE
United States Patent and Trademark Office
Address: COMMISSIONER FOR PATENTS
P.O. Box 1450
Alexandria, Virginia 22313-1450
www.uspto.gov

APPLICATION NO.	FILING DATE	FIRST NAMED INVENTOR	ATTORNEY DOCKET NO.	CONFIRMATION NO.
13/100,874	05/04/2011	TAE KIM	P222392.US.01	3862

7590 01/24/2012

DORSEY & WHITNEY LLP
INTELLECTUAL PROPERTY DEPARTMENT
Columbia Center
701 Fifth Avenue, Suite 6100
SEATTLE, WA 98104-7043

EXAMINER	
ART UNIT	PAPER NUMBER
2827	
NOTIFICATION DATE	DELIVERY MODE
01/24/2012	ELECTRONIC

DECISION GRANTING PETITION UNDER 37 CFR 1.138(d)

The declaration of express abandonment is recognized

This is in response to the petition under 37 CFR 1.138(d), requesting for a refund of any previously paid search fee and excess claims fee in the above-identified application.

The petition is granted.

The express abandonment is recognized. Any previously paid search fee and excess claims fee are hereby refunded.

Telephone inquiries should be directed to the Office of Data Management at (571) 272-4200.

Kaletus Buchanan

Patent Publication Branch
Office of Data Management

02 FC:1111 540.00 CR

04 FC:1202 676.00 CR

05 FC:1201 440.00 CR

FORM PET651G (Rev. 08/07)

UNITED STATES PATENT AND TRADEMARK OFFICE

UNITED STATES DEPARTMENT OF COMMERCE
United States Patent and Trademark Office
Address: COMMISSIONER FOR PATENTS
P.O. Box 1450
Alexandria, Virginia 22313-1450
www.uspto.gov

APPLICATION NO.	FILING DATE	FIRST NAMED INVENTOR	ATTORNEY DOCKET NO.	CONFIRMATION NO.
13/100,874	05/04/2011	TAE KIM	P222392.US.01	3862

7590 01/24/2012

DORSEY & WHITNEY LLP
INTELLECTUAL PROPERTY DEPARTMENT
Columbia Center
701 Fifth Avenue, Suite 6100
SEATTLE, WA 98104-7043

EXAMINER	
ART UNIT	PAPER NUMBER
2827	
NOTIFICATION DATE	DELIVERY MODE
01/24/2012	ELECTRONIC

DECISION DISMISSING PETITION UNDER 37 CFR 1.138(c)

The declaration of express abandonment will not be recognized

This is in response to the petition under 37 CFR 1.138(c), for express abandonment to avoid publication of the above-identified application.

The petition is dismissed.

The express abandonment will **not** be recognized for the reason(s) indicated below:

1. ☑ The petition under 37 CFR 1.138(c) was not filed in sufficient time to permit the appropriate officials to recognize the abandonment and remove the application from the publication process.
2. ☐ The petition was not signed by a party authorized by 37 CFR 1.33(b)(1), (3) or (4).
3. ☐ The Application was published in compliance with 35 U.S.C. 122(b), and it is available on the USPTO web site at http://www.uspto.gov/patft/index.html.
4. ☐ Petition fee was not paid.

The application **has/will be published** as scheduled.

Telephone inquiries should be directed to the Office of Data Management at (571) 272-4200.

Kaletus Buchanan

Patent Publication Branch
Office of Data Management

UNITED STATES PATENT AND TRADEMARK OFFICE

Commissioner for Patents
United States Patent and Trademark Office
P.O. Box 1450

MAILED

DEC 21 2011

OFFICE OF PETITIONS

BLAKELY SOKOLOFF TAYLOR & ZAFMAN LLP
1279 OAKMEAD PARKWAY
SUNNYVALE CA 94085-4040

In re Application of	: DECISION ON REQUEST TO
Itaru IKEUCHI	: PARTICIPATE IN PPH PROGRAM
Application No. 13/100,888	: AND PETITION TO MAKE SPECIAL
Filed: May 4, 2011	: UNDER 37 CFR 1.102(a)
Atty. Docket No.: 6639P1212	:

For: INFORMATION PROCESSING APPARATUS, RAID CONTROLLER CARD, AND A MIRRORING METHOD

This is a decision on the request to participate in the Patent Prosecution Highway (PPH) program and the petition under 37 CFR 1.102(a), filed October 7, 2011 to make the above-identified application special.

The petition is **GRANTED**.

A grantable request to participate in the PPH (patent prosecution highway) program and petition to make special require:

(1) the U.S. application is a Paris Convention application which either validly claims priority under 35 U.S.C. 119(a) and 37 CFR 1.55 to one or more applications filed in the JPO (Japanese Patent Office) or claims priority to a PCT application that contains no priority claims. Alternatively, it can be a national stage application under the PCT which validly claims priority to an application filed in the JPO or claims priority to a PCT application that contains no priority claims. It can also be a "bypass application" filed under 35 U.S.C. 111(a) which validly claims benefit under 35 U.S.C. 120 to a PCT application, which PCT application validly claims priority to an application filed in the JPO or claims priority to a PCT application that contains no priority claims, or contains no priority claim;

(2) applicant must submit a copy of the allowable/patentable claim(s) from the JPO application(s) along with an English translation thereof and a statement that the English translation is accurate;

(3) all the claims in the U.S. application must sufficiently correspond or be amended to sufficiently correspond to the allowable/patentable claim(s) in the JPO application(s);

(4) examination of the U.S. application has not begun;

(5) applicant must submit a copy of all the office actions from each of the JPO application(s) containing the allowability/patentable claim(s) along with an English translation thereof and a statement that the English translation is accurate; and

(6) applicant must submit an IDS listing the documents cited by the JPO examiner in the JPO office action along with copies of documents except U.S. patents or U.S. patent application publications.

The request to participate in the PPH program and petition comply with the above requirements. Accordingly, the above-identified application has been accorded "special" status.

Telephone inquiries concerning this decision should be directed to Robert DeWitty, Petition Attorney, Office of Petitions at 571-272-8427.

All other inquiries concerning the examination or status of the application is accessible in the PAIR system at http://www.uspto.gov/ebc/index.html.

This application will be forwarded to Technology Center Art Unit 2189 for action on the merits commensurate with this decision once this application's formality reviews have been completed.

David Bucci
Petitions Examiner
Office of Petitions

Doc Code: PET.GREEN
Document Description: Petition for Green Tech Pilot

PTO/SB/420 (03-11)

PETITION TO MAKE SPECIAL UNDER THE GREEN TECHNOLOGY PILOT PROGRAM

Attorney Docket Number: 33196.00002.US01	Application Number (if known):	Filing date: May 4, 2011

First Named Inventor: Gregorio TARANCON III

Title: Apparatus for the Synthesis of Anhydrous Hydrogen Halide and Anhydrous Carbon Dioxide

APPLICANT HEREBY REQUESTS TO PARTICIPATE IN THE GREEN TECHNOLOGY PILOT PROGRAM FOR THE ABOVE-IDENTIFIED APPLICATION. **See Instruction Sheet on page 2.**

This petition must be timely filed electronically using the USPTO electronic filing system, EFS-Web.

1. By filing this petition:

   Applicant is requesting early publication: Applicant hereby requests early publication under 37 CFR 1.219 and the publication fee set forth in 37 CFR 1.18(d) accompanies this request.

2. By filing this petition: applicant is agreeing to make an election without traverse in a telephonic interview and elect an invention that meets the eligibility requirements for the Green Technology Pilot Program, if the Office determines that the claims are not obviously directed to a single invention. See Instruction Sheet.

3. This request is accompanied by statements of special status for the eligibility requirement.

4. The application contains no more than three (3) independent claims and twenty (20) total claims.

5. The application does not contain any multiple dependent claims.

6. Other attachments: _____

Signature /Renzo N. Rocchegiani/	Date May 4, 2011
Name (Print/Typed) Renzo N. Rocchegiani	Registration Number 54,824

Note: *Signatures of all the inventors or assignees of record of the entire interest or their representative(s) are required in accordance with 37 CFR 1.33 and 11.18. Please see 37 CFR 1.4(d) for the form of the signature. If necessary, submit multiple forms for more than one signature, see below*.*

■ *Total of 1 forms are submitted.

If you need assistance in completing the form, call 1-800-PTO-9199 and select option 2.

Instruction Sheet for
Petition to Make Special Under the Green Technology Pilot Program

(Not to be Submitted to the USPTO)

The following is a summary of the requirements (for more information see the notices (i) "Pilot Program for Green Technologies Including Greenhouse Gas Reduction," (ii) "Elimination of Classification Requirement in the Green Technology Pilot Program," and (iii) "Expansion and Extension of the Green Technology Pilot Program," available on the USPTO web site at http://www.uspto.gov/patents/init_events/green_tech.jsp):

(1) The application must be a non-reissue, non-provisional utility application filed under 35 U.S.C. 111(a), or an international application that has entered the national stage in compliance with 35 U.S.C. 371, irrespective of the filing date of the application. Reexamination proceedings are excluded from this pilot program.

(2) The application must contain three or fewer independent claims and twenty or fewer total claims. The application must not contain any multiple dependent claims. For an application that contains more than three independent claims or twenty total claims, or multiple dependent claims, applicant must file a preliminary amendment in compliance with 37 CFR 1.121 to cancel the excess claims and/or the multiple dependent claims at the time the petition to make special is filed.

(3) The claims must be directed to a single invention that materially enhances the quality of the environment, or that materially contributes to: (1) the discovery or development of renewable energy resources; (2) the more efficient utilization and conservation of energy resources; or (3) green house gas emission reduction (see the eligibility requirements of sections II and III of the notice (i) cited above). The petition must include a statement that, if the USPTO determines that the claims are directed to multiple inventions (e.g., in a restriction requirement), applicant will agree to make an election without traverse in a telephonic interview, and elect an invention that meets the eligibility requirements in section II or III of the notice (i) cited above.

(4) The petition to make special must be timely filed electronically using the USPTO electronic filing system, EFS-Web, and selecting the document description of "Petition for Green Tech Pilot" on the EFS-Web screen. Applicant should use form PTO/SB/420, which is available as a Portable Document Format (PDF) fillable form in EFS-Web and on the USPTO Web site.

(5) The petition to make special must be filed at least one day prior to the date that a first Office action (which may be an Office action containing only a restriction requirement) appears in the Patent Application Information Retrieval (PAIR) system. Applicant may check the status of the application using PAIR.

(6) The petition to make special must be accompanied by a request for early publication in compliance with 37 CFR 1.219 and the publication fee set forth in 37 CFR 1.18(d).

Privacy Act Statement

The **Privacy Act of 1974 (P.L. 93-579)** requires that you be given certain information in connection with your submission of the attached form related to a patent application or patent. Accordingly, pursuant to the requirements of the Act, please be advised that: (1) the general authority for the collection of this information is 35 U.S.C. 2(b)(2); (2) furnishing of the information solicited is voluntary; and (3) the principal purpose for which the information is used by the U.S. Patent and Trademark Office is to process and/or examine your submission related to a patent application or patent. If you do not furnish the requested information, the U.S. Patent and Trademark Office may not be able to process and/or examine your submission, which may result in termination of proceedings or abandonment of the application or expiration of the patent.

The information provided by you in this form will be subject to the following routine uses:

1. The information on this form will be treated confidentially to the extent allowed under the Freedom of Information Act (5 U.S.C. 552) and the Privacy Act (5 U.S.C 552a). Records from this system of records may be disclosed to the Department of Justice to determine whether disclosure of these records is required by the Freedom of Information Act.
2. A record from this system of records may be disclosed, as a routine use, in the course of presenting evidence to a court, magistrate, or administrative tribunal, including disclosures to opposing counsel in the course of settlement negotiations.
3. A record in this system of records may be disclosed, as a routine use, to a Member of Congress submitting a request involving an individual, to whom the record pertains, when the individual has requested assistance from the Member with respect to the subject matter of the record.
4. A record in this system of records may be disclosed, as a routine use, to a contractor of the Agency having need for the information in order to perform a contract. Recipients of information shall be required to comply with the requirements of the Privacy Act of 1974, as amended, pursuant to 5 U.S.C. 552a(m).
5. A record related to an International Application filed under the Patent Cooperation Treaty in this system of records may be disclosed, as a routine use, to the International Bureau of the World Intellectual Property Organization, pursuant to the Patent Cooperation Treaty.
6. A record in this system of records may be disclosed, as a routine use, to another federal agency for purposes of National Security review (35 U.S.C. 181) and for review pursuant to the Atomic Energy Act (42 U.S.C. 218(c)).
7. A record from this system of records may be disclosed, as a routine use, to the Administrator, General Services, or his/her designee, during an inspection of records conducted by GSA as part of that agency's responsibility to recommend improvements in records management practices and programs, under authority of 44 U.S.C. 2904 and 2906. Such disclosure shall be made in accordance with the GSA regulations governing inspection of records for this purpose, and any other relevant (*i.e.*, GSA or Commerce) directive. Such disclosure shall not be used to make determinations about individuals.
8. A record from this system of records may be disclosed, as a routine use, to the public after either publication of the application pursuant to 35 U.S.C. 122(b) or issuance of a patent pursuant to 35 U.S.C. 151. Further, a record may be disclosed, subject to the limitations of 37 CFR 1.14, as a routine use, to the public if the record was filed in an application which became abandoned or in which the proceedings were terminated and which application is referenced by either a published application, an application open to public inspection or an issued patent.
9. A record from this system of records may be disclosed, as a routine use, to a Federal, State, or local law enforcement agency, if the USPTO becomes aware of a violation or potential violation of law or regulation.

Docket No.: 33196.00002.US01
(PATENT)

IN THE UNITED STATES PATENT AND TRADEMARK OFFICE

In re Patent Application of: Gregorio TARANCON III	Customer No.: 30827
Application No.: TBA	Confirmation No.: TBA
Filed: May 4, 2011	Art Unit: TBA
For: APPARATUS FOR THE SYNTHESIS OF ANHYDROUS HYDROGEN HALIDE AND ANHYDROUS CARBON DIOXIDE	Examiner: TBA

MS Petitions
Commissioner for Patents
P.O. Box 1450
Alexandria, VA 22313-1450

STATEMENT IN SUPPORT OF PETITION TO MAKE SPECIAL UNDER THE GREEN TECHNOLOGY PILOT PROGRAM

Dear Sir:

In support of the Petition to Make Special Under the Green Technology Pilot Program, filed concurrently herewith, the Applicants request the above referenced application be afforded special status.

The Applicants submit the basis for special status eligibility under the Green Technology Pilot Program is that the application materially contributes to energy conservation as while as the reduction of greenhouse gases. The application relates to a system for treatment and/or decomposition of organic halide fluids, such as refrigerants, to achieve an environmentally safe disposition thereof. The system is particularly beneficial because it can treat and/or decompose organic halides effectively and allows for the collection and recycle of the by-products. The system can recycle the carbon monoxide generated during the reaction of the organic halide fluids to form carbon dioxide. *See e.g. Specification at p. 4.* The system also allows for recycling and collecting the hydrogen halides formed from the treatment and/or decomposition

of the organic halides. *See e.g. Specification at p. 5.* By collecting the hydrogen halides, the system provides the ability to use these by-products of the treatment and/or decomposition of the harmful organic halides in further processing. In other words, the system is able to treat and/or decompose the harmful organic halides and produce reusable resources without emission into the environment. *See e.g. Specification at pp. 12-14.* The system also includes a three heat-sink vessel dual reactor that is able to operate at low temperatures and utilizes a heat transfer fluid to collect and reutilize heat from an exothermic reaction thereby saving on the use of energy. *See e.g. Specification at pp.* 16.

For the above reasons, this application is believed to qualify for special status under the Green Technology Pilot Program.

Dated: May 4, 2011

Respectfully submitted,

/Renzo N. Rocchegiani/_____

Renzo N. Rocchegiani
Registration No.: **54,824**
McKenna Long & Aldridge LLP
1900 K Street N.W.
Washington, D.C. 20006
Voice: 202-496-7500
Fax: 202-496-7756
Attorneys for Applicants

UNITED STATES PATENT AND TRADEMARK OFFICE

UNITED STATES DEPARTMENT OF COMMERCE
United States Patent and Trademark Office
Address: COMMISSIONER FOR PATENTS
P.O. Box 1450
Alexandria, Virginia 22313-1450
www.uspto.gov

APPLICATION NO.	FILING DATE	FIRST NAMED INVENTOR	ATTORNEY DOCKET NO.	CONFIRMATION NO.
13/100,942	05/04/2011	Gregorio Tarancon III	33195.00002.US01	3974

30827 7590 08/22/2011

MCKENNA LONG & ALDRIDGE LLP
1900 K STREET, NW
WASHINGTON, DC 20006

EXAMINER	
ART UNIT	PAPER NUMBER
1774	

MAIL DATE	DELIVERY MODE
08/22/2011	PAPER

Please find below and/or attached an Office communication concerning this application or proceeding.

The time period for reply, if any, is set in the attached communication.

UNITED STATES PATENT AND TRADEMARK OFFICE

Commissioner for Patents
United States Patent and Trademark Office
P.O. Box 1450
Alexandria, VA 22313-1450
www.uspto.gov

MCKENNA LONG & ALDRIDGE LLP
1900 K STREET, NW
WASHINGTON DC 20006

AUG 22 2011

In re Application of :
Gregorio Tarancon III :
Application No. 13/100,942 :
Filed: January 06, 2011 :
Attorney Docket No. 38969-502001US :

DECISION ON PETITION
TO MAKE SPECIAL UNDER
THE GREEN TECHNOLOGY
PILOT PROGRAM

This is a decision on the petition under 37 CFR 1.102, filed May 04, 2011, to make the above-identified application special under the pilot program for applications pertaining to Green Technologies as set forth in 74 Federal Register Notice 64666 (December 8, 2009) and amended by 75 Federal Register Notice 28554 (May 21, 2010) and 75 Federal Register Notice 69049 (November 10, 2010).

The petition is **GRANTED**.

A grantable petition to make an application special under 37 CFR 1.102 and the pilot program as set forth in 74 FR 64666 must be directed to a nonprovisional application filed under 35 USC 111(a) or be a national stage entry under 35 USC 371, exclusive of any reissue applications.

In order to qualify for special status, the following requirements must be met. 1) The application must have no more than 3 independent claims and no more than 20 total claims. 2) The application must not contain any multiple dependent claims. 3) The petition must state the basis for seeking special status, i.e., the claimed invention either: A) materially enhances the quality of the environment or B) materially contributes to: i) the discovery or development of renewable energy resources, ii) the more efficient utilization and conservation of energy resources, or iii) greenhouse gas emission reduction. 4) If the disclosure is not clear on its face that the claimed invention materially contributes under category (A) or (B), the petition must be accompanied by a statement by the applicant, assignee, or an attorney/agent registered to practice before the Office explaining how the materiality standard is met. 5) A statement that applicant will agree to make an election without traverse in a telephonic interview if a restriction requirement is made by the examiner. 6) The petition to make special must be filed electronically. 7) The petition must be filed at least one day prior to the date that a first Office Action appears in the Patent Application Information Retrieval (PAIR) system. 8) The petition must be accompanied by a request for early publication in compliance with 37 CFR 1.219 and include the publication fee as set forth in 37 CFR 1.18(d).

The requirement for a fee for consideration of the petition to make special for applications pertaining to Green Technologies has been waived.

The instant petition complies with items 1 – 8 above. Accordingly, the above-identified application has been accorded "special" status.

Telephone inquires concerning this decision should be directed to Blaine Copenheaver at 571-272-1156.

The application is being forwarded to the examiner for action on the merits commensurate with this decision.

/Blaine Copenheaver/

Blaine Copenheaver
Quality Assurance Specialist
Technology Center 1700