REQUEST FOR PARTICIPATION IN THE PATENT COOPERATION TREATY - PATENT PROSECUTION HIGHWAY (PCT-PPH) PILOT PROGRAM BETWEEN THE JAPAN PROPERTY OFFICE (JPO) AND THE USPTO

Application No.:	13/143,461	Filing Date:	July 6, 2011
Confirmation No.:	5835	Attorney Docket No.:	Q125396
First Named Inventor:	Tomonori MASUDA		
Title of the Invention:	PHOTOGRAPHING DEVICE AND CONTROLLING METHOD THEREOF, AND THREE-DIMENSIONAL INFORMATION MEASURING DEVICE		

THIS REQUEST FOR PARTICIPATION IN THE PCT-PPH PILOT PROGRAM ALONG WITH THE REQUIRED DOCUMENTS MUST BE SUBMITTED VIA EFS-WEB. INFORMATION REGARDING EFS-WEB IS AVAILABLE AT HTTP://WWW.USPTO.GOV/EBC/EFS_HELP.HTML.

APPLICANT HEREBY REQUESTS PARTICIPATION IN THE PCT-PPH PILOT PROGRAM AND PETITIONS TO MAKE THE ABOVE-IDENTIFIED APPLICATION SPECIAL UNDER THE PCT-PPH PILOT PROGRAM.

The above-identified application is (1) a national stage entry of the corresponding PCT application, or (2) a national stage entry of another PCT application which claims priority to the corresponding PCT application, or (3) a national application that claims domestic/ foreign priority to the corresponding PCT application, or (4) a national application which forms the basis for the priority claim in the corresponding PCT application, or (5) a continuing application of a U.S. application that satisfies one of (1) to (4) above, or (6) a U.S. application that claims domestic benefit to a U.S. provisional application which forms the basis for the priority claim in the corresponding PCT application.

The corresponding PCT application number(s) is/are: PCT/JP2010/068037

The international date of the corresponding PCT application(s) is/are: October 14, 2010

I. List of Required Documents:

a. A copy of the latest international work product (WO/ISA, WO/IPEA, or IPER) in the above–identified corresponding PCT application(s)

☐ Is attached.

☑ Is not attached because the document is already in the U.S. application.

b. A copy of all claims which were indicated as having novelty, inventive step and industrial applicability in the above-identified corresponding PCT application(s)

☐ Is attached.

☑ Is not attached because the document is already in the U.S. application.

c. English translations of the latest international work product and International Patent No. PCT/JP2010/068037 are attached.
A statement that the English translation is accurate is attached for International Patent Application No. PCT/JP2010/068037.

d. (1) An information disclosure statement listing the documents cited in international work products (ISR, WO/ISA, WO/IPEA, IPER) of the corresponding PCT application

☐ Is attached.

☑ Has already been filed in the above-identified U.S. application on July 6, 2011

(2) Copies of all documents (except for U.S. patents or U.S. patent application publications)

☐ Are attached.

☑ Have already been filed in the above-identified U.S. application on July 6, 2011

REQUEST FOR PARTICIPATION IN THE PATENT COOPERATION TREATY - PATENT PROSECUTION HIGHWAY (PCT-PPH) PILOT PROGRAM
BETWEEN THE JAPAN PROPERTY OFFICE (JPO) AND THE USPTO
(continued)

Application No.:	13/143,461
First Named Inventor:	Tomonori MASUDA

II. Claims Correspondence Table:

Claims in US Application	Patentable Claims in the corresponding PCT Application	Explanation regarding the correspondence
20	4 which depends from claim 1	US claim 20 sufficiently corresponds to PCT claims 1 and 4
21	5	US claim 21 is substantially identical to PCT claim 5. US claim 21 depends from US claim 20.
22		US claim 22 is substantially identical to PCT claim 6. US claim 22 depends from US claim 20.
23		US claim 23 is substantially identical to PCT claim 7. US claim 23 depends from US claim 22.
24		US claim 24 is substantially identical to PCT claim 8. US claim 24 depends from US claim 20.
25		US claim 25 is substantially identical to PCT claim 9. US claim 25 depends from US claim 20.
26		US claim 26 sufficiently corresponds to PCT claims 1, 4, and 10. US claim 26 does not include the multiple dependency.
27	14 which depends from claim 11	US claim 27 sufficiently corresponds to PCT claims 11 and 14.
28	15	US claim 28 is substantially identical to PCT claim 15. US claim 28 depends from US claim 27.
29		US claim 29 is substantially identical to PCT claim 16. US claim 29 depends from US claim 27.
30		US claim 30 is substantially identical to PCT claim 17. US claim 29 depends from US claim 29.
31		US claim 31 is substantially identical to PCT claim 18. US claim 31 depends from US claim 27.
32		US claim 32 is substantially identical to PCT claim 19. US claim 32 depends from US claim 27.
33		US claim 33 is substantially identical to PCT claim 2. US claim 33 depends from US claim 20.
34		US claim 34 is substantially identical to PCT claim 12. US claim 12 depends from US claim 27.
35		US claim 35 depends from US claim 20 and recites subject matter which is narrower in scope than the allowable claims in the PCT application. The support is found in the US application, page 29, line 18 to page 31, line 5.
36		US claim 36 depends from US claim 26 and recites subject matter which is narrower in scope than the allowable claims in the PCT application. The support is found in the US application, page 29, line 18 to page 31, line 5.
37		US claim 37 depends from US claim 27 and recites subject matter which is narrower in scope than the allowable claims in the PCT application. The support is found in the US application, page 29, line 18 to page 31, line 5.

III. All the claims in the US application sufficiently correspond to patentable claims 4, 5, 14, or 15 in the corresponding PCT application or made dependent from claims 4, 5, 14, or 15 that were found to be patentable in the corresponding PCT application, as indicated in the claim correspondence table.

IV. Box VIII on the PCT/ISA/237 form is marked and an observation is made regarding the clarity of claim 6. The reason why the Japanese claim 6 was judged to be unclear was lack of a Japanese letter, which would have corresponded to a word "for" in the recitation "for making the pixel resolving power" in line 4 of PCT claim 6 of the English translation. New US claim 22 recites "for making the pixel resolving power" in line 3, and, thus, is free of the observation made in Box VIII on the PCT/ISA/237 form.

V. Payment of Fees:

☑ **The USPTO is directed and authorized to charge all required fees, except for the Issue Fee and the Publication Fee to Deposit Account No. 19-4880. Please also credit any overpayments to said Deposit Account.**

☐ **Credit Card.**

SEND ALL CORRESPONDENCE TO:
The address associated with Customer Number:

WASHINGTON OFFICE
23373
CUSTOMER NUMBER

Signature	/ Marina V. Zalevsky /	Date	August 11, 2011
Name (Print/Typed)	Marina V. Zalevsky	Registration Number	53,825

[Translation]

PATENT COOPERATION TREATY

From the
INTERNATIONAL SEARCHING AUTHORITY

To:

Agent
Kazunori KOBAYASHI
Address
Taiyo Seimei Otsuka Building 3F,
2-25-1, Kita Otsuka, Toshima-ku
Tokyo, 170-0004 JAPAN

PCT

WRITTEN OPINION OF THE
INTERNATIONAL SEARCHING AUTHORITY

(PCT Rule 43*bis*.1)

Date of mailing *(day/month/year)*	11.01.2011
Applicant's or agent's file reference KP-12062	**FOR FURTHER ACTION** See paragraph 2 below

International application No.	International filing date *(day/month/year)*	Priority date *(day/month/year)*
PCT/JP2010/068037	14.10.2010	23.03.2010

International Patent Classification (IPC) or both national classification and IPC
G01B11/245(2006.01)i, G01B11/24(2006.01)i, G01C3/06(2006.01)i, H04N13/02(2006.01)i

Applicant
FUJIFILM Corporation

1. This opinion contains indications relating to the following items:

- [x] Box No. I Basis of the opinion
- [ ] Box No. II Priority
- [ ] Box No. III Non-establishment of opinion with regard to novelty, inventive step and industrial applicability
- [ ] Box No. IV Lack of unity of invention
- [x] Box No. V Reasoned statement under Rule 43*bis*.1(a)(i) with regard to novelty, inventive step and industrial applicability; citations and explanations supporting such statement
- [ ] Box No. VI Certain documents cited
- [ ] Box No. VII Certain defects in the international application
- [x] Box No. VIII Certain observations on the international application

2. **FURTHER ACTION**

If a demand for international preliminary examination is made, this opinion will be considered to be a written opinion of the International Preliminary Examining Authority ("IPEA") except that this does not apply where the applicant chooses an Authority other than this one to be the IPEA and the chosen IPEA has notified the International Bureau under Rule 66.1*bis*(b) that written opinions of this International Searching Authority will not be so considered.

If this opinion is, as provided above, considered to be a written opinion of the IPEA, the applicant is invited to submit to the IPEA a written reply together, where appropriate, with amendments, before the expiration of 3 months from the date of mailing of Form PCT/ISA/220 or before the expiration of 22 months from the priority date, whichever expires later.

For further options, see Form PCT/ISA/220.

3. For further details, see notes to Form PCT/ISA/220.

Name and mailing address of the ISA/ Examination Standards Office, Japan Patent Office 3-4-3 Kasumigaseki, Chiyoda-ku Tokyo 100-8915, Japan Facsimile No.	Date of completion of this opinion	Authorized officer Yasufumi NAKAGAWA Telephone No. 03-3581-1101/ 3258
	21.12.2010	

[Translation]

WRITTEN OPINION OF THE INTERNATIONAL SEARCHING AUTHORITY

International application No.

Box No. I Basis of this opinion

1. With regard to the **language**, this opinion has been established on the basis of:
   - ☒ the international application in the language in which it was filed.
   - ☐ a translation of the international application into _____ which is the language of a translation furnished for the purposes of international search (Rules 12.3(a) and 23.1(b)).

2. ☐ This opinion has been established taking into account the **rectification of an obvious mistake** authorized by or notified to this Authority under Rule 91 (Rule 43*bis*.1(a))

3. With regard to any **nucleotide and/or amino acid sequence** disclosed in the international application, this opinion has been established on the basis of a sequence listing filed or furnished:

   a. (means)
   - ☐ on paper
   - ☐ in electronic form

   b. (time)
   - ☐ in the international application as filed
   - ☐ together with the international application in electronic form
   - ☐ subsequently to this Authority for the purposes of search

4. ☐ In addition, in the case that more than one version or copy of a sequence listing has been filed or furnished, the required statements that the information in the subsequent or additional copies is identical to that in the application as filed or does not go beyond the application as filed, as appropriate, were furnished.

5. Additional comments:

[Translation]

WRITTEN OPINION OF THE INTERNATIONAL SEARCHING AUTHORITY

International application No.

Box No. V **Reasoned statement under Rule 43*bis*.1(a)(i) with regard to novelty, inventive step and industrial applicability; citations and explanations supporting such statement**

1. Statement

Novelty (N)	Claims	1-19	YES
	Claims		NO
Inventive step (IS)	Claims	4, 5, 14, 15	YES
	Claims	1-3, 6-13, 16-19	NO
Industrial applicability (IA)	Claims	1-19	YES
	Claims		NO

2. Citations and explanations:

Reference 1: JP 2005-165481 A (TOPCON CORPORATION) 2005.06.23
Paragraphs [0017] to [0018], [0022] to [0030], and [0049]; Figures 1 to 3 and 13
& US 2005/0151839A1, Paragraphs [0080] to [0081], [0084] to [0092]; Figures 1 to 3 and 13
& EP 1536378 A2

Reference 2: JP 1-257932 A (Nikon Corporation) 1989.10.16
Page 1, lower left column, lines 5 to 15; and Page 2, upper right column, line 9 to lower right column, line 12; Figures 1 to 3
(No family)

Reference 3: JP 2006-203395 A (Konica Minolta Holdings, Inc.) 2006. 08. 03
Paragraphs [0028] to [0035]; Figure 1
(No family)

Reference 4: JP 61-86741 A (Nippon Kogaku K.K.) 1986.05.02
Page 1, lower left column, lines 5 to 18; Page 2, upper left column, line 5 to upper right column, line 7; Page 2, lower right column, line 6 to Page 3, upper left column, line 4; Figures 1 to 8
& US 4639113 A, paragraph 1, line 51 to paragraph 2, line 22; paragraph 2 line 63 to paragraph 3, line 19; paragraph 5, line 1 to paragraph 6, line 29; Figures 1 to 8

The invention claimed in claims 1 to 3, 6 to 13, and 16 to 19 of the present application is not inventive in view of the combination of Reference 1 (Paragraphs [0017] to [0018], [0022] to [0030], and [0049], Figures 1 to 3 and 13) and Reference 2 (Page 1, lower left column, lines 5 to 15; and Page 2, upper right column, line 9 to lower right column, line 12, Figures 1 to 3) cited in International Search Report. References 1 and 2 are common to each other in a technical field of a display device provided with a camera. Therefore, it is easy for a person ordinarily skilled in the art of the invention to judge whether the calculated plane resolution and depth resolution are respectively deviated from the adequate plane resolution and depth resolution in the three-dimensional image display apparatus disclosed in the Reference 1 based on the invention disclosed in Reference 2. Further, it is easy for a person ordinarily skilled in the art of the invention to display the deviation amount from the adequate plane resolution and depth resolution in both analog and digital formats when it is judged that the deviation occurs in the three-dimensional image display apparatus disclosed in the Reference 1 based on the invention disclosed in Reference 2. Furthermore, it is within the range of design variation for a person ordinarily skilled in the art to use the plane resolution and depth resolution calculated from the image captured at the last time as the adequate plane resolution and depth resolution.

The invention claimed in claims 4, 5, 14, and 15 is not disclosed in any references cited in International Search Report, and therefore is not obvious for a person ordinarily skilled in the art.
Reference 1 discloses a three-dimensional image display apparatus having an image capturing device 10 provided with a digital camera for capturing right and left images of a measurement object 1 so as to obtain a stereo image of the measurement object 1, and a three-dimensional position measuring device 14 provided with a 3D scanner for emitting laser beam to the measurement object 1 and receiving the laser beam reflected by the measurement object 1 with use of a CCD camera. The three-dimensional image display apparatus includes an orientation section 24 for calculating the plane resolution and depth resolution. In the three-dimensional image display apparatus, based on the data obtained by the orientation section 24, a display image forming section 30 forms a model of the measurement object 1, and the stereo image corresponding to the model is displayed on a display device 40 constituted of an image display device such as a liquid crystal display device and CRT. Here, it is within the range of design variation for a person ordinarily skilled in the art to display a through image on the display device 40.

[Translation]

WRITTEN OPINION OF THE INTERNATIONAL SEARCHING AUTHORITY

International application No.

Box No. VIII Certain observations on the international application

The following observations on the clarity of the claims, description, and drawings or on the question whether the claims are fully supported by the description, are made:

The description "... a condition range of the photographing condition for making ... in the reference range" in claim 6 is inadequate as Japanese language expression, and therefore the invention becomes unclear.

[Translation]

WRITTEN OPINION OF THE INTERNATIONAL SEARCHING AUTHORITY

International application No.

Supplemental Box

In case **the space in any of the preceding boxes is not sufficient.**
Continuation of: Box No. V

Moreover, according to the disclosure of Reference 2, a camera display device includes an analog display part using bar display, and a digital display part using numerical display. The camera display device further includes an appropriate exposure amount display device 12 for displaying the deviation amount from the appropriate exposure amount by the analog display part and the digital display part when the exposure is out of the appropriate exposure control range.
According to the disclosure of Reference 3, a moving body monitor system includes a moving body recognition camera 10 provided with an image capturing section 11 having a camera part 111 and an image resolution changing device 116 to capture an image of the object, and an image display device 20 for displaying an image provided by the moving body recognition camera 10.
Reference 4 discloses a camera including a display device constituted of LC (liquid crystal) or LED (light-emitting diode) segments to display photography information within a viewfinder. In the display device, it is possible to activate the display elements independently from each other by dot display, and to continuously activate the display elements by bar display. Accordingly, Reference 4 discloses that the display device displays the appropriate exposure value and the deviation amount from the appropriate exposure value.
However, any references do not disclose the features of the invention claimed in claims 4, 5, 14, and 15 including "a selecting section for selecting any measurement image from a plurality of the measurement images, wherein the reference pixel resolving power obtaining section obtains pixel resolving power or photographing condition corresponding to the selected measurement image, and determines this pixel resolving power or pixel resolving power obtained from the photographing condition as the reference pixel resolving power" and "the display section reproducing and displaying the measurement image selected by the selecting section".
Therefore, the invention disclosed in claims 4, 5, 14, and 15 produces an advantageous effect. Specifically, it becomes possible to easily and surely know the change of the pixel resolving power when the pixel resolving power changes during the photographing operation, according to the invention disclosed in claims 4, 5, 14, and 15.

STATUTORY DECLARATION

I, Kazumi TAKANO, of Taiyo Seimei Otsuka Building 3F, 2-25-1, Kitaotsuka, Toshimaku, Tokyo, 170-0004, Japan, do solemnly and sincerely declare as follows:

I am well acquainted with the English and Japanese languages.

The attached translation is true into the English language of the PCT international application NO. PCT/JP2010/068037 filed in the name of FUJIFILM Corporation in the Japanese Patent Office on 14 October 2010.

This 29th day of July 2011,

Kazumi Takano

Kazumi TAKANO

PHOTOGRAPHING DEVICE AND CONTROLLING METHOD THEREOF, AND THREE-DIMENSIONAL INFORMATION MEASURING DEVICE

TECHNICAL FIELD

The present invention relates to a photographing device and a controlling method thereof, and a three-dimensional information measuring device to obtain three-dimensional information of a measurement object.

BACKGROUND ART

As a photographing device to obtain three-dimensional information of a measurement object, for example a stereocamera is known. The stereocamera has a pair of cameras or image capturing units that are placed at right and left sides with a suitable distance between them, and photographs a parallax image of the measurement object as a measurement image. This parallax image includes a pair of right and left perspective images photographed with each camera. Based on the parallax of correspondence points on this pair of perspective images, three-dimensional information of the measurement object, that is, coordinates (Xi, Yi, Zi) of an arbitrary point Pi on the measurement object in the three-dimensional space is found.

Pixel resolving power of the above three-dimensional information, that is, a length (a plane (right and left or top and bottom) and a depth) on the three-dimensional space corresponding to a pixel interval on an image sensor is determined depending on each photographing condition of an object distance,

a focal length of a taking lens, a pixel size, and an interval between the cameras (a base length). Therefore, it is necessary to set the object distance, the focal length and so on corresponding to an appropriate pixel resolving power for the measurement object.

Pixel resolving power at the set focal length is displayed in a photographing device acquiring three-dimensional information by light-section method. In this photographing device, when the displayed pixel resolving power does not make satisfaction, a user can input pixel resolving power to change the focal length of the taking lens to become this pixel resolving power (refer to Patent Document 1). In addition, a device for displaying pixel resolving power in a photographing condition that calibration data is applied when the calibration data that is for revising distortions and so on of the measurement image is generated, is also known (refer to Patent Document 2).

PRIOR ART DOCUMENTS

Patent Documents

Patent Document 1: Japanese Patent Laid-Open Publication No. 7-174538

Patent Document 2: Japanese Patent Laid-Open Publication No. 2003-242485

SUMMARY OF INVENTION

Problems to be Solved by the Invention

By the way, the pixel resolving power is an important factor in obtaining the three-dimensional information, and it

is useful to display the pixel resolving power in photography of the measurement image. However, since the pixel resolving power is simply displayed on the conventional devices, there is a problem that photography is performed without noticing that pixel resolving power changed during photography operation.

The present invention intends to provide a photographing device and a controlling method thereof, and a three-dimensional information measuring device in which change of pixel resolving power can be recognized easily.

Means for Solving the Problems

To achieve the intension mentioned above, a photographing device of the present invention comprises a measurement photography section, a condition obtaining section, a pixel resolving power calculation section, a display section, a reference pixel resolving power obtaining section and a display control section. The measurement photography section photographs a measurement image of a measurement object to obtain three-dimensional information. The condition obtaining section obtains a photographing condition for photographing the measurement image. The pixel resolving power calculation section calculates pixel resolving power of the measurement image based on the photographing condition. The display section displays the pixel resolving power that is calculated in the pixel resolving power calculation section. The reference pixel resolving power obtaining section obtains reference pixel resolving power for photographing the measurement image. The display control section changes a display mode of the display

section when it is detected that the pixel resolving power becomes out of a reference range determined based on the reference pixel resolving power.

It is preferable that the display section displays a through image of the measurement image with the pixel resolving power. It is preferable that the reference pixel resolving power obtaining section obtains the pixel resolving power corresponding to the measurement image photographed at the last time as the reference pixel resolving power.

It is preferable to provide a recording section that records the pixel resolving power or the photographing condition with the measurement image when the measurement image is photographed, and a selecting section to select any measurement image from a plurality of the measurement images. The reference pixel resolving power obtaining section obtains pixel resolving power or photographing condition corresponding to the selected measurement image, and determines this pixel resolving power or pixel resolving power obtained from the photographing condition as the reference pixel resolving power.

It is preferable that the display section reproduces and displays the measurement image selected by the selecting section. A photographing condition range display section is provided to display a condition range of the photographing condition for making the pixel resolving power become in the reference range when the calculated pixel resolving power is out of the reference range. It is preferable that the photographing condition range display section displays a range out of the photographing condition range separately from the

photographing condition range, in addition to the photographing condition range.

The measurement photography section has plural cameras to photograph each perspective image as the measurement image. The condition obtaining section obtains a focal length, an object distance, a pixel size, a base length that is a distance between the cameras, and so on as the photographing condition.

A projector section which projects measuring beam on the measurement object may be provided, and the measurement object being irradiated by the measuring beam may be photographed with one camera.

A three-dimensional information measuring device of the present invention comprises the photographing device and an analyzing section which calculates three-dimensional information based on the measurement image photographed by the photographing device.

A controlling method of a photographing device of the present invention comprises a calculation step for calculating pixel resolving power from photographing condition of the measurement image, a displaying step for displaying the pixel resolving power in a display section, an obtaining step for obtaining reference pixel resolving power in photographing the measurement image, a judgment step for judging whether the pixel resolving power becomes out of the reference range determined based on the reference pixel resolving power, and a changing step for changing display mode of the pixel resolving power on the display section when the pixel resolving power becomes out of the reference range.

In the displaying step, it is preferable that a through image of the measurement image is displayed with the pixel resolving power. In the obtaining step, it is preferable that pixel resolving power of the measurement image photographed at the last time is obtained as the reference pixel resolving power.

It is preferable to execute a recording step for recording the pixel resolving power or the photographing condition with the measurement image when the measurement image is photographed, and a selection step for selecting any measurement image from the plural measurement images. In the reference pixel resolving power obtaining step, the pixel resolving power or the photographing condition of the selected measurement image is obtained, and pixel resolving power obtained from this pixel resolving power or photographing condition is determined as the reference pixel resolving power. This selected measurement image is reproduced and displayed on the display section.

In addition, a step for setting at least one of the plural photographing conditions, and a range displaying step for displaying a condition range of the photographing condition for making the pixel resolving power become in the reference range when the pixel resolving power calculated in the calculation step is out of the reference range, are executed. It is preferable that in the range displaying step, a range out of the photographing condition range is displayed separately from the photographing condition range, in addition to the photographing condition range.

As the measurement image, plural perspective images from different viewpoints photographed with plural cameras are used.

Or plural images which are made by photographing the measurement object scanned by slit-light are used.

EFFECT OF THE INVENTION

According to the present invention, since the display mode is changed when the pixel resolving power is changed during the photography operation, it can be easily and surely recognized that the pixel resolving power is changed. In addition, since there is no need to judge whether the pixel resolving power changed, it can concentrate on determination of framing and so on.

BRIEF DESCRIPTION OF DRAWINGS

FIG.1 is a block diagram illustrating a constitution of a photographing device to which the present invention is applied.

FIG.2 is a functional block diagram illustrating a function of a resolving power display control section.

FIG.3A is an explanatory diagram illustrating a display example of pixel resolving power.

FIG.3B is an explanatory diagram illustrating a state that display of the pixel resolving power is changed.

FIG.4 is a flowchart illustrating a display control process of the pixel resolving power.

FIG.5 is a functional block diagram illustrating a function of the resolving power display control section which detects a change of photographing condition and displays the pixel resolving power.

FIG.6 is a flowchart illustrating a display control

process in which the change of the photographing condition is detected and the pixel resolving power is displayed.

FIG.7 is a functional block diagram illustrating a function of the resolving power display control section which detects changing operation of the photographing condition and displays the pixel resolving power.

FIG.8 is a flowchart illustrating a display control process in which the changing operation of the photographing condition is detected and the pixel resolving power is displayed.

FIG.9 is a functional block diagram illustrating a function of the resolving power display control section which obtains the reference pixel resolving power from an operating section.

FIG.10 is a flowchart illustrating a display control process in which the reference pixel resolving power is obtained from the operating section.

FIG.11 is a functional block diagram illustrating a function of the resolving power display control section which obtains pixel resolving power at the time of the last photography, as the reference pixel resolving power.

FIG.12 is a functional block diagram illustrating a function of the resolving power display control section which obtains pixel resolving power at the time of photography of a parallax image which is selected to be reproduced, as the reference pixel resolving power.

FIG.13 is an explanatory diagram illustrating contents of a file in which pixel resolving power at the time of the photography is recorded with the parallax image.

FIG.14 is a functional block diagram illustrating a function of the resolving power display control section which displays a bar graph showing a range of the photographing condition satisfying the standard resolving power.

FIG.15 is an explanatory diagram illustrating a display example of the bar graph showing the range of the photographing condition satisfying the standard resolving power.

FIG.16 is a flowchart illustrating a display control process in which a bar graph is displayed during a constant period of time when the pixel resolving power is changed.

FIG.17 is a flowchart illustrating a display control process in which a bar graph is displayed when a boundary value is out of a settable range.

FIG.18 is a flowchart illustrating a display control process in which a bar graph is displayed when the pixel resolving power does not satisfy the reference pixel resolving power.

FIG.19 is an explanatory diagram illustrating a display example of the bar graph when a range of the reference pixel resolving power is designated.

FIG.20 is a block diagram illustrating a constitution of a photographing device which photographs a measurement image to obtain three-dimensional information in light-section method.

FIG.21 is a block diagram illustrating a constitution of a three-dimensional information measuring device.

MODE FOR CARRYING OUT THE INVENTION

First Embodiment

A photographing device of a first embodiment has a function to display a change when pixel resolving power is changed during photography operation. In FIG.1, a photographing device 10 includes a first camera 11 and a second camera 12 as a measurement photography section. The first camera 11 and the second camera 12 photograph a parallax image as a measurement image so as to analyze and obtain three-dimensional information of a measurement object Obj, that is, coordinates (Xi, Yi, Zi) of an arbitrary point Pi in the measurement object in a three-dimensional space. The first camera 11 photographs a right perspective image of the measurement object Obj. The second camera 12 photographs a left perspective image of the measurement object Obj. The parallax image is a set of the right perspective image and the left perspective image.

A system control section 14 integrally controls each part of the photographing device 10. An operating section 15 has an operation button and can perform setting of photographing condition, instructions of photography of a parallax image, and so on. As the photographing condition, there are a focal length of each camera 11, 12, an interval between the cameras 11, 12, that is, a base length, a pixel size of each perspective image, and an object distance to the measurement object Obj. In these photographing conditions, the focal length, the base length and the pixel size can be set through the operating section 15. The object distance is determined by a position of the measurement object Obj against each camera 11, 12.

The first camera 11 and the second camera 12 are located along a direction where optical axes PL1, PL2 become parallel

each other with a constant distance between them. The direction where the first camera 11 and the second camera 12 are arranged is not limited to the longitudinal direction, and for example it may be the vertical direction. In addition, although two perspective images are respectively photographed from two viewpoints with the two cameras 11, 12 in this example, perspective images from more than three viewpoints may be photographed with more than three cameras, or perspective images from more than three viewpoints may be photographed by moving one camera.

The first camera 11 is composed of a taking lens 11a and an image sensor section 11b, and an optical image focused through the taking lens 11a is converted into an electric signal by the image sensor section 11b and is output. The image sensor section 11b is composed, for example, of a CCD type or MOS type image sensor. The taking lens 11a is of zoom type that can change a focal length between the wide end and the telephoto end, and can adjust the focal length through zooming operation. The second camera 12, which has the constitution same as the first camera 11, is composed of a taking lens 12a of zoom type and an image sensor section 12b.

According to operation of the operating section 15, a lens control section 16 controls each taking lens 11a, 12a to be the same focal length. In addition, based on image data from a signal processing section 21 described later, the lens control section 16 adjusts focus of each taking lens 11a and 12a so that the focus meets the measurement object Obj, for example by contrast detection method. Note that the focus adjustment may

be done by triangulation method or so on.

Each taking lens 11a, 12a have each built-in encoder unit 11c, 12c that detects a position of a built-in zoom lens and a position of a focus lens. Based on an encoding signal from the each encoder unit 11c, 12c, the lens control section 16 detects the focal length of the each taking lens 11a, 12a, and detects a distance to the object on which the focus of the each taking lens 11a, 12a meets, as the object distance. The each encoder unit 11c, 12c and the lens control section 16a constitute a condition obtaining section for obtaining the focal length and the object distance.

The techniques for obtaining the focal length and the object distance are not limited to above. About the object distance, for example a range-finding sensor for measuring the object distance may be separately provided, or the object distance may be calculated from parallax of correspondence points of perspective images photographed with the cameras 11 and 12. In addition, the object distance may be designated through the operating section 15 and the taking lenses 11a and 12a may be controlled so that their focuses meet the designated distance. In this case, the designated object distance is obtained as the photographing condition. Of course it is necessary to place the measurement object Obj at the designated object distance.

Furthermore, a shifting mechanism to shift the measurement object Obj relative to the each camera 11, 12 may be provided so that a distance between the measurement object Obj and the each camera 11, 12 increases and decreases. In this case, a measurement sensor may be provided in the shifting

mechanism to obtain the object distance. In addition, for example in case the shifting mechanism is driven to become the object distance input through the operating section 15, the object distance input through the operating section 15 is obtained as the photographing condition.

The first and the second cameras 11, 12 are attached to an interval adjusting mechanism 18 which is controlled by an interval control section 17. The interval control section 17 drives the interval adjusting mechanism 18 according to operation of the operating section 15 to increase and decrease an interval between the first and the second cameras 11, 12. Accordingly, the base length is changed.

The interval adjusting mechanism 18 is comprised of a pair of shifting members 18a, a lead screw 18b, a guide axis 18c, a motor 18d and so on. The lead screw 18b and the guide axis 18c horizontally extend in the longitudinal direction and are arranged to be parallel to each other. The first camera 11 is attached to one of the shifting members 18a, and the second camera 12 is attached to the other of the shifting members 18a, respectively. In addition, the each shifting member 18a is movable along the longitudinal direction, because the lead screw 18b is inserted in a screw aperture of the shifting member 18a, and the guide axis 18c is inserted in a groove of the shifting member 18a.

On the lead screw 18b, a right-handed screw is formed along one end side, and a left-handed screw is formed along the other end side, both from the center. The lead screw 18b is rotated by the motor 18d whose drive is controlled by the interval control

section 17. When the motor 18d rotates in the normal direction to rotate the lead screw 18b in one direction, the each shifting members 18a moves in each direction to reduce the distance between them. When the motor 18d rotates in the counter direction to rotate the lead screw 18b in the other direction, the each shifting members 18a moves in each direction to increase the distance between them.

To the interval adjusting mechanism 18 mentioned above, an encoder 19 that detects a shift position of the each shifting member 18a is attached. The interval control section 17 obtains the base length based on an encoder signal, which represents the shift position of the each shifting member 18a, from the encoder 19. Note that the technique for obtaining the base length is not limited to this, and for example, there may be a constitution to obtain the base length based on the drive pulse number supplied to the motor 18d.

The signal processing section 21 is composed of a correlation double sampling circuit, an amplifier circuit, an A/D converter which are provided corresponding to the each camera 11, 12. The signal processing section 21 applies noise reduction and signal amplification to an output signal from the each camera 11, 12, and then applies a digital conversion and outputs obtained image data to a bus 22.

Sections such as the system control section 14, the lens control section 16, the interval control section 17, the signal processing section 21 are connected to the bus 22, and each section can exchange data and various instructions through the bus 22.

An exposure control section 23 controls an electronic

shutter speed to make a correct exposure in response to photography instructions through operation of the operating section 15 for activating the each camera 11, 12 to photograph a perspective image. An image processing section 24 performs white balance correction, gamma correction and so on against the two perspective images.

The image sensor sections 11b, 12b apply a photoelectric conversion to a subject image and output it, by reading electric charge accumulated to each pixel of the image sensor, as is generally known. In reading the electric charge, the exposure control section 23 performs resolution conversion for example by pixel mixture, depending on a resolution mode appointed through operation of the operating section 15. A basic pixel size is determined by the pixel size of the image sensor, but the pixel size is changed by the resolution conversion such as the pixel mixture. The exposure control section 23 obtains the pixel size that is one of the photographing conditions, and outputs the pixel size corresponding to the resolution conversion. Note that in case the resolution of the each perspective image is changed by image processing, a pixel size corresponding to the resolution changed by the image processing may be obtained. In addition, the resolution can be changed by pixel skipping instead of the pixel mixture, and, on the contrary, may raise the resolution by pixel interpolation or the like.

A display section 25 is composed of a VRAM for memorizing image data of an image which should be displayed, a driver for generating a driving signal based on the image data memorized in the VRAM, a monitor which is driven by the driving signal

from the driver, and so on. During the photography mode, the right perspective image photographed in one camera, for example the first camera 11, is input into the display section 25 sequentially and is displayed as a through image. The operator can observe the through image and perform framing. In addition, under the reproduction mode, the each photographed perspective image is displayed.

In addition, the display section 25 displays the pixel resolving power. Under the photography mode, the pixel resolving power of the three-dimensional information carried out from the photographed parallax image is displayed. The pixel resolving power is the length corresponding to the size of the pixel on the image sensor, and there are a pixel resolving power of the distance on the plane which is perpendicular to optical axes PL1, PL2 (hereinafter referred to as the plane pixel resolving power), and a pixel resolving power in a depth direction which is parallel to the axes PL1, PL2 (hereinafter referred to as the depth pixel resolving power).

A compression/decompression section 26 compresses data of a parallax image in a predetermined format when the parallax image is recorded in a recording medium 27, and decompresses the parallax image read out from the recording medium 27. The decompressed parallax image is sent to the display section 25.

A media control section 28 performs writing data to and reading data from the recording medium 27. Two perspective images photographed in the photography mode are recorded as one file in the recording medium 27.

In addition, in the reproduction mode, the media control section

28 reads the file from the recording medium 27, applies the decompression process to the two perspective images in the file in the compression/decompression section 26, and then sends the images to the display section 25. Accordingly, the parallax image recorded in the recording medium 27 is reproduced on the display section 25 so as to be able to be viewed stereoscopically.

A resolving power display control section 30 controls display mode of a pixel resolving power displayed on the display section 25. The resolving power display control section 30 has a work memory 30a to temporary memorize a calculated pixel resolving power and so on.

In FIG.2, a pixel resolving power calculation section 31 calculates the pixel resolving power based on the base length that is the photographing condition, the focal length, the object distance, and the pixel size, which are input therein. As described above, the base length is obtained by the interval control section 17, the focal length and the object distance are obtained by the lens control section 16, and the pixel size is obtained by the exposure control section 23, respectively. In addition, the calculation of the pixel resolving power is performed for example every period of time.

The plane pixel resolving power ΔXY and the depth pixel resolving power ΔZ can be calculated by following formulae 1 and 2.

[Formula 1] $\Delta XY = H \cdot p/f$

[Formula 2] $\Delta Z = H^2 \cdot p/(f \cdot d)$

Wherein d represents the base length, and f represents the focal length, H represents the object distance, and p represents the

pixel size.

A display control section 32 detects change of the pixel resolving power calculated in the pixel resolving power calculation section 31. When the change is detected, a display mode of the pixel resolving power on the display section 25 changes. Whenever the pixel resolving power is calculated in the pixel resolving power calculation section 31, the display control section 32 compares the pixel resolving power calculated at this time with the pixel resolving power calculated at the last time, between the corresponding ones. That is, the plane pixel resolving power calculated at this time is compared with the plane pixel resolving power calculated at the last time, and the depth pixel resolving power calculated at this time is compared with the depth pixel resolving power calculated at the last time.

In the above comparison, when the pixel resolving power calculated at this time and the pixel resolving power calculated at the last time are different with each other, the display control section 32 judges that pixel resolving power is changed and changes display of the pixel resolving power on the display section25 from a normal display to a highlighting display. The highlighting display is continued in constant duration time Tref. When the pixel resolving power does not change, the normal display is maintained.

Note that the pixel resolving power calculated at the last time is memorized for example in the work memory 30a, and the pixel resolving power memorized in this work memory 30a is updated by the pixel resolving power calculated at this time

whenever a comparison is completed. Note that it may update the pixel resolving power memorized in the work memory 30a only when the pixel resolving power changes.

An example of a state of the display section 25 is illustrated in FIG.3. A display screen of the display section 25 is provided with a through image display area 34, and a pixel resolving power display area 35 to display the pixel resolving power. Through observing a through image in the through image display area 34, a framing can be determined. The pixel resolving power display area 35 is divided into a plane pixel resolving power display area 35a and a depth pixel resolving power display area 35b.

In the normal display corresponding to the state that the pixel resolving power does not change, each pixel resolving power is displayed for example by black letters black on white background on the each pixel resolving power display area 35a, 35b, as illustrated in FIG.3A. On the other hand, in the highlighting display corresponding to the state that the pixel resolving power changes, the pixel resolving power is displayed for example by white letters on the red background, as illustrated in the depth pixel resolving power display area 35b of FIG.3B. In this way, the pixel resolving power is displayed with emphasis on the display screen, so that the operator is informed that the pixel resolving power changes during photography operation.

Next, an operation of the above embodiment will be described. For photographing the measurement object Obj, at first the measurement object Obj is put before the cameras 11, 12. When the photographing device 10 is activated, photography of

video image is started by the first camera 11, and the photographed image is sent to the display section 25 through the signal processing section21 and the image processing section 24, to be displayed as a through image.

In addition, it can observe the through image in the state that focus meets the measurement object Obj, since focus adjustment of the taking lenses 11a, 12a is performed by the lens control section 16 based on the image data from the signal processing section 21. Note that the focus adjustment may be performed in response to instructions of the focus adjustment by the operating section15, half push operation of a release button and so on.

The through image is displayed on the display section 25 as described above, and each pixel resolving power is displayed on the pixel resolving power display area 35 which is provided on a lower part of the display section 25. At this time, in case there is no adjustment of the focal length of the each taking lens 11a, 12a, the object distance and the base length, and there is no change of the resolution, the each pixel resolving power displayed on the pixel resolving power display area 35 is maintained in the state of the normal display, as illustrated in FIG.3A.

By the way, while the display of the through image is performed as described above, the display of the pixel resolving power is controlled by activating the resolving power display control section 30 to perform the display control process every period of time. As illustrated in FIG.4, at first, based on an encoding signal from one camera such as the first camera 11,

the focal length and the object distance of the each taking lens 11a, 12a are obtained by the lens control section 16. In addition, the base length is obtained by the interval control section 17 based on an encoding signal from the encoder 19, and a pixel size according to a designated resolution is obtained by the exposure control section 23.

The photographing conditions obtained by these sections as described above are sent to the resolving power display control section 30, and based on these, the pixel resolving power is calculated. When the pixel resolving power is calculated, the each pixel resolving power calculated at this time is compared with the each pixel resolving power calculated at the last time between the corresponding ones, so as to check whether there is a change of the pixel resolving power or not.

When the pixel resolving power is different with the other according to the above comparison, the highlighting display is applied for the mismatched pixel resolving power. For example, the highlighting display is applied only for the depth pixel resolving power when only the depth pixel resolving power is different with the other. When both the plane pixel resolving power and the depth pixel resolving power are different with the others, the each pixel resolving power is subject to the highlighting display. After that, timing is started after resetting a timer count for controlling highlighting display time, and the display control processing is finished. Note that the timer count is reset whenever the pixel resolving power becomes mismatched.

On the other hand, it is examined whether the timer count

reaches the duration time Tref, when the pixel resolving power matches with the other. Then this processing is finished when it does not reach, and when it reaches, this display control processing is finished after returning the highlighting display to the normal display if there is the pixel resolving power being subject to the highlighting display. Note that it may perform the control of the timing to return the highlighting display to the normal display separately for the depth pixel resolving power and the plane pixel resolving power.

The operator operates the operating section 15 while observing a through image displayed on the display section 25, so as to regulate the focal length and the object distance of the each taking lens 11a, 12a as needed, to adjust the base length, and to designate the resolution.

For example, when the operating section 15 is operated to instruct a change of the focal length, zooming of the each taking lens 11a, 12a is carried out by the lens control section 16 so as to change the focal length. In addition, when a change of the camera interval (the base length) is instructed through the operating section 15, the lead screw is turned by the motor 18d in a direction according to the instruction, accordingly the camera interval is changed since the first camera 11 and the second camera 12 shift in the direction to be close to each other or in the direction to be apart from each other.

The measurement object Obj is moved to be close to or apart from the each camera 11, 12. Or the photographing device 10 is moved to be close to or apart from the measurement object Obj. When the interval (object distance) between the measurement

object Obj and the each camera 11, 12 is changed in this way, the focus of the each taking lens 11a, 12a is adjusted to follow the change.

Furthermore, when a resolution is designated, the image sensor sections 11b, 12b are controlled to be subject to pixel mixture or not, so as to become the designated resolution. Note that the change of the resolution may perform when the parallax image is photographed. Therefore, while displaying the through image, reading of electric charge can be performed to be suitable for the video image, without performing the pixel mixture.

As described above, when it is performed that the adjustment of the focal length, the object distance and the base length, and the change of the resolution, the pixel resolving power changes according to these changes. Accordingly, when the change is detected through the display control process, the changed pixel resolving power is subject to the highlighting display.

Therefore, for example when only the depth pixel resolving power changes, as illustrated in FIG.3B, the depth pixel resolving power is displayed by the white letters on the red background in the depth pixel resolving power display area 35b, so as to inform that there is the change of this pixel resolving power. In addition, when the plane pixel resolving power changes in the same way, the plane pixel resolving power is displayed by the white letters on the red background in the plane pixel resolving power display area 35a.

And since the highlighting display is continued by resetting the timer count whenever the photographing condition

is changed and it is detected that the pixel resolving power changes, the highlighting display of the pixel resolving power changed accordingly is continued while the photographing condition is changed. When the pixel resolving power stops changing, the pixel resolving power in the highlighting display becomes subject to the normal display, after the duration time Tref is passed since the time that the last change of the pixel resolving power is detected.

Since the display mode of the pixel resolving power is changed as described above, the operator should pay attention to the pixel resolving power only when the highlighting display is performed and the change of the pixel resolving power is informed, and usually may concentrate on decision of the framing and so on.

After decision of the photographing condition and the framing, instruction of photography is performed through operation of the operating section 15. By the instruction of photography, photography of still image is carried out by each of the first and second cameras 11, 12. In this way, the parallax image, consisting of the right perspective image and the left perspective image that are photographs of an objected part of the measurement object Obj, is photographed. And the two perspective images are sent to the compression/decompression section 26 for the data compression, then sent to the media control section 28 and recorded as one file in the recording medium 27.

In the first embodiment described above, although the normal display is switched to the highlighting display when there is a change of the pixel resolving power, change of the display

mode is not limited to this, and for example a text size, a text color, and a display position for displaying the pixel resolving power may be changed. In case the change of the text size, the text size becomes larger than that in the normal display. In case the change of the text color, the text becomes a color louder than that in the normal display. In case the change of the display position, the text is displayed at a position more noticiable than that in the normal display. In addition, the text for displaying the pixel resolving power may flash when there is a change of the pixel resolving power, or it may be that the normal display is undisplayed and the pixel resolving power is displayed only when there is a change of the pixel resolving power.

Second Embodiment

FIG.5 and FIG.6 illustrate a second embodient in which a change of the photographing condition is detected and a display mode of the pixel resolving power is changed. Note that since it is similar to the first enbodiment except for matters to be described below, it refers the same reference number to the substantially same component and omits the detailed description. In FIG.5, the resolving power display control section 30 is composed of a condition change detecting section 41, the pixel resolving power calculation section 31, and a display control section 42. Other components are the same as the first embodiment.

As illustrated in FIG.6, the condition change detecting section 41 detects a change of the photographing condition obtained by each section. When it is detected by the condition change detecting section 41 that at least one of input

photographing conditions is changed, each photographing condition is sent to the pixel resolving power calculation section 31, and the pixel resolving power is calculated. When the each pixel resolving power is calculated, the display control section 42 displays the calculated pixel resolving power on the display section 25, and the display of the pixel resolving power is changed to the highlighting display during the duration time Tref.

Note that when only the object distance is changed, since only the depth pixel resolving power is changed, it is preferable that only the display of the depth pixel resolving power is subject to the highlighting display in this case. The detection of the change of the object distance may be performed by detecting a movement of the measurement object Obj itself or detecting a movement of the photographing device 10, in addition by comparing the object distance s.

Although the change of the photographing condition itself is detected in this embodiment, the change of the photographing condition may be detected by detecting an operation to change the photographing condition, as illustrated in FIG.7 and FIG.8. In this example, a changing operation detecting section 44 detects the operation to change the photographing condition. When an operation to change either one of the photographing conditions is detected by the changing operation detecting section 44, calculation of the pixel resolving power is instructed to the pixel resolving power calculation section 31, and the pixel resolving power is calculated from the photographing condition. The display control section 42 displays

the each calculated pixel resolving power on the display section 25, and the display of it is changed to the highlighting display during the duration time Tref.

Note that when the object distance is not changed by operation of the photographing device 10, it is preferable that a change of the photographing condition is detected such as the example illustrated in FIG.5 and FIG.6, than the constitution to detect the changing operation. And in this case, it is preferable that a value corresponding to a real object distance is obtained at least every display control processing.

Third Embodiment

A third embodiment, in which a display mode of the pixel resolving power is controlled based on a reference range, will be described. Note that since it is similar to the first embodiment except for matters to be described below, it refers the same reference number to the substantially same component and omits the detailed description.

Function blocks of the resolving power display control section 30 in this example are illustrated in FIG.9, and display control processes are illustrated in FIG.10. A reference pixel resolving power memorizing section 51 is composed of for example a work memory 30a and memorizes the obtained reference pixel resolving power. In this example, the operating section 15 obtains the reference pixel resolving power, that is, the reference pixel resolving power is input through operation of the operating section 15 to be memorized in the reference pixel resolving power memorizing section 51. The reference pixel resolving power is the pixel resolving power to be required

according to a purpose in use of the measurement result and so on for obtaining the three-dimensional information, and the plane pixel resolving power and the depth pixel resolving power are memorized.

A display control section 52 decides a range of the pixel resolving power to be the reference for judgment (hereinafter referred to as the reference range), based on the obtained reference pixel resolving power (the required pixel resolving power to obtain optimum three-dimensional information). In addition, the display control section 52 changes the display mode of the pixel resolving power when it is detected that the pixel resolving power calculated in the pixel resolving power calculation section 31 became out of the reference range. In this example, since the obtained reference pixel resolving power is set to be the upper limit of the reference range, the normal display is switched to the highlighting display when the calculated pixel resolving power becomes lower (larger) than the reference pixel resolving power.

After obtaining the reference pixel resolving power, the pixel resolving power is calculated by the pixel resolving power calculation section 31, from the each photographing condition. The calculated pixel resolving power and the upper limit of the reference range (the reference pixel resolving power) are compared with each other between the corresponding ones, by the display control section 52. The highlighting display is applied to the each pixel resolving power when the latter is bigger (the pixel resolving power is lower) than the former, and the normal display is applied when the latter is as same

as or smaller (the pixel resolving power is higher) than the former. As a result, the highlighting display is applied only when the pixel resolving power is not in the required range.

The obtaining method of the reference pixel resolving power is not limited to above. In an example illustrated in FIG.11, pixel resolving power at the time when the parallax image is photographed at the last time is obtained as the reference pixel resolving power. Each pixel resolving power calculated in the pixel resolving power calculation section 31 is input into a reference pixel resolving power memorizing section 54. In addition, a photography signal that is generated when a parallax image is photographed, as the instruction to acquire the pixel resolving power, is input into the reference pixel resolving power memorizing section 54. When the photography signal is input, the reference pixel resolving power memorizing section 54 obtains and memorizes the each pixel resolving power calculated at that time as the reference pixel resolving power.

As same as the example of FIG.9 and FIG.10, the reference pixel resolving power memorized in the reference pixel resolving power memorizing section 54 is determined as the upper limit of the reference range. The display control section 52 examines whether the pixel resolving power calculated in the pixel resolving power calculation section 31 is out of the reference range or not, and controls the display mode of the pixel resolving power based on the result. Accordingly, it is convenient for example when photographing is performed with the pixel resolving power as same as or higher than that in the photography of the parallax image at the last time.

In addition, in an example illustrated in FIG.12 or the like, the pixel resolving power of a reproduced parallax image may be determined as the reference pixel resolving power. In this example, the media control section 28 functions as the reference pixel resolving power obtaining section. As illustrated in FIG.13, for recording a parallax image (two perspective images) as a file, tags containing the plane pixel resolving power and the depth pixel resolving power when the parallax image is photographed are recorded in a file F, with data of the parallax image, by the media control section 28.

Under the reproduction mode, the media control section 28 reads a file selected through the operating section 15, and then sends two perspective images included in the file to the display section 25 through the compression/decompression section 26, so as to displays them as an image for stereoscopic vision. In addition to this, the pixel resolving power is read from the tag, and is send to a reference pixel resolving power memorizing section 55 to be memorized. The memorized content of the reference pixel resolving power memorizing section 55 is updated, whenever a file is read out, to pixel resolving power recorded in a tag of the read file.

When it is switched to the photography mode from the reproduction mode, the display control section 52 examines whether the pixel resolving power calculated in the pixel resolving power calculation section 31 is out of the reference range or not, and controls the display mode of the pixel resolving power based on the result, under the condition that the reference pixel resolving power memorized in the reference pixel resolving

power memorizing section 55 at that time is determined as the upper limit of the reference range. Accordingly, it is convenient for photographing the parallax image with the pixel resolving power as same as or higher than that in the parallax image photographed before.

Note that in this example, by recording the plane pixel resolving power and the depth pixel resolving power to the tag of the file including the parallax image, the parallax image and the pixel resolving power are recorded in relation with each other. In addition, the parallax image and the pixel resolving power may be recorded as the respective files, and the name of the other file in relation with the tag included in these files may be recorded, or a file to connect the both files may be recorded.

In addition, the photographing condition may be recorded instead of the pixel resolving power, so that the resolving power can be calculated from the photographing condition. The parallax image and the pixel resolving power may be recorded in a memory or a hard disk in substitution for the recording medium 27. Furthermore, it may constitute to read the data of the recorded pixel resolving power regardless of the parallax image.

In the each example illustrated in the third embodiment described above, the obtained reference pixel resolving power is set to be the upper limit of the reference range, and whether the calculated pixel resolving power is larger than the upper limit or not is judged. However, utilization of the reference range that is determined from the obtained reference pixel resolving power may be set optionally. For example, it may be

that each of the upper limit and the lower limit of the reference range is determined from the reference pixel resolving power and whether it is in the reference range or not is judged. In addition, it may be that only the lower limit of the reference range is determined from the reference pixel resolving power and whether the calculated pixel resolving power is smaller than the lower limit or not is judged. In addition, the upper limit and the lower limit may be the same value, such as a reference pixel value, and the display of the pixel resolving power may be changed to the highlighting display when it deviated from the value of this pixel resolving power.

It may preset ratios of the upper limit and the lower limit against the obtained reference pixel resolving power, and may decide the upper limit or the lower limit using these ratios. For example, when it sets that a ratio of the lower limit side is 80% and a ratio of the upper limit side is 120%, a range of the pixel resolving power is decided under conditions that 80% of the memorized reference pixel resolving power is the lower limit of the pixel resolving power, and 120% of the memorized reference pixel resolving power is the upper limit of the pixel resolving power. And the display control section 52 judges whether the pixel resolving power is in these calculated limits and controls the display mode.

Note that the ratios of the lower limit and the upper limit described above are not limited to conditions that the lower limit is lower than the memorized reference pixel resolving power, and the upper limit is larger than the memorized reference

pixel resolving power. Therefore, it may set for example that the ratio of the lower limit side is 110% and the ratio of the upper limit side is 130%. In addition, it may decide the upper limit and the lower limit by setting a difference (length to be permitted) against the memorized reference pixel resolving power, instead of a ratio against the memorized reference pixel resolving power.

The ratios and differences to decide the upper limit and the lower limit may be input from the operating section 15, and as the ratios and differences, one used at the time of the last photography or one recorded with the reproduced parallax image may be used. In addition, according to selection of each mode such as a high-definition mode which requires high pixel resolving power and a normal mode which requires normal pixel resolving power, one of ratios or differences prepared beforehand may be automatically set. Furthermore, the upper limit and the lower limit may be determined based on a ratio or a difference according to a value of the obtained reference pixel resolving power.

Fourth Embodiment

A fourth embodiment, in which a range of a photographing condition being set satisfies the reference pixel resolving power and a range that does not satisfy the reference pixel resolving power are displayed, will be described. Note that since it is similar to the third embodiment except for matters to be described below, it refers the same reference number to the substantially same component and omits the detailed description.

By operating the operating section 15, one can be selected

from a focal length setting mode for regulating the focal length, a camera interval setting mode for regulating the base length, and a resolution setting mode for changing the resolution.

In FIG.14, about the photographing condition changed in the selected setting mode, a boundary value calculation section 61 of the resolving power display control section 30 in this example calculates a value to implement the reference pixel resolving power memorized in the reference pixel resolving power memorizing section 51, as the boundary value of the photographing condition. In the calculation of the boundary value of this photographing condition, the boundary value is calculated from each current photographing condition other than the relevant photographing condition, and the reference pixel resolving power. For example, when the focal length setting mode is selected, under conditions of the pixel size, the object distance and the base length which are presently set, a focal length to implement the memorized reference pixel resolving power is calculated as the boundary value.

A bar graph generating section 62 generates a bar graph about the photographing condition changed in the selected setting mode and displays it on the display section 25. An example of a bar graph displayed in the focal length setting mode is illustrated in FIG.15. A belt-shaped bar 63a of a bar graph 63 shows a range of the focal length where zooming of the taking lenses 11a and 12a is possible, in which one end corresponds to a wide-angle end (WIDE end) and the other end corresponds to the telephoto end (TELE end). In the bar 63a, a current value index 63b is displayed. The current value index 63b shows a value

of the currently set focal length, and travels in the bar 63a between the wide-angle end and the telephoto end in response to zooming under the focal length setting mode.

The bar 63a described above is divided into an adequate area A1 and an inadequate area A2, from a boundary Bo which is on a position corresponding to the boundary value calculated by the above-described boundary value calculation section 61. The adequate area A1 is an area of focal length where the pixel resolving power that is higher than the memorized reference pixel resolving power can be obtained, and shows a range satisfying the reference pixel resolving power. On the other hand, the inadequate area A2 is an area of focal length where the pixel resolving power becomes lower than the memorized reference pixel resolving power, and shows a range not satisfying the reference pixel resolving power. In the bar graph 63 of this focal length, the telephoto end side from the boundary Bo is considered to be the adequate area A1, and the wide-angle end side from the boundary Bo is considered to be the inadequate area A2. The adequate area A1 and the inadequate area A2 are displayed in each specific colors different with each other, for example, the adequate area is white or transparent, and the inadequate area is red, so as to be able to be easily distinguished.

About the focal length being set, a range satisfying the reference pixel resolving power and a range not to satisfy can be easily found through referring to the bar graph 63, and the relations with the current focal length can be found from them and the current value index 63b.

In the camera interval setting mode, a similar bar graph

about the base length is displayed. In the resolution setting mode, the boundary value of the pixel size is obtained, and a similar bar graph of the pixel size is displayed. Note that the graph may be displayed about the resolution obtained by converting the pixel size. In addition, when a mode is selected for example from a high-resolution mode which is high in resolution, a standard-resolution mode which is standard in resolution and a low-resolution mode which is low in resolution, a position of the each mode may be represented in the bar graph so that the relation with the boundary value can be recognized.

The object distance in the photographing condition may be displayed like other photographing conditions, in case that the shifting mechanism is provided for relatively shifting the measurement object Obj against the each camera 11, 12 to obtain the object distance designated through the operating section 15, or that the object distance of the measurement object Obj is input through the operating section 15, as described above.

In the above example, the bar graph of the photographing condition being set in the setting mode is always displayed under the setting mode, however, for example a bar graph may be displayed during a constant period in response to a change of pixel resolving power as illustrated in FIG.16. Of course, a bar graph may be displayed during a constant period in response to a change of photographing condition. In addition, as illustrated in FIG.17, a bar graph may be displayed only when the boundary value of the calculated photographing condition is in the range that can be set in the concerned photographing condition.

In an example illustrated in FIG.18, under the setting

mode, the pixel resolving power calculated from the each photographing condition and the upper limit of the reference range (the reference pixel resolving power) are compared with each other between the corresponding ones like the third embodiment, and then the each pixel resolving power is subject to the highlighting display when the latter is larger than the former (the pixel resolving power is low). The bar graph 63 is additionally displayed, but when the latter is as same as or smaller (the pixel resolving power is higher) than the former, the normal display is applied to the each pixel resolving power, and the bar graph 63 becomes undisplayed. When the bar graph 63 is displayed in this example, the current value index 63b will be displayed in the inadequate area A2. In addition, in case display of the bar graph 63 is controlled, the reference range may be defined by the upper limit and the lower limit. In this case, as an example illustrated in FIG.19, the each end sides (the telephoto end side and the wide-angle end side) of the bar 63a are the inadequate area A2, and the area between them is the adequate area A1. Note that it may be a constitution which controls only the display of the bar graph, without changing display mode of the pixel resolving power.

Although the current value of the photographing condition being set is displayed in the each example in the fourth embodiment described above, it may be a constitution that does not display the current value. In addition, it may warn or prohibit photography when the current value is in the inadequate area A2, that is, when a photographing condition is set to make the pixel resolving power be lower than the reference pixel resolving

power, and it is also preferable to prohibit setting of the photographing condition which makes the pixel resolving power be lower than the reference pixel resolving power.

In addition, display of the satisfying range and the unsatisfying range is not limited to the bar graph, but it should be easily recognized as a graphical display. Furthermore, it may change the color only for the position of the boundary value in the bar graph, display the boundary value with a numerical value, and display the difference between the current value and the boundary value. These can be used in combination with the other embodiments described above.

In the first to fourth embodiments, the example in which the optical axes PL1, PL2 of the cameras 11, 12 are parallel to each other is described, however it may be that the cameras 11, 12 are not parallel to each other and arranged with a suitable angle of convergence, and the pixel resolving power is calculated in consideration of the angle of convergence.

Fifth Embodiment

A constitution of a photographing device in a fifth embodiment is illustrated in FIG.20. This photographing device 70 photographs a measurement image to measure three-dimensional information of the measurement object by light-section method. Note that since it is similar to the first embodiment except that the photographing device 70 irradiates the measurement object with slit-light and photographs the measurement image with one camera, it refers the same reference number to the substantially same component and omits the detailed description.

On the shifting member18a, a projector 71 and a camera

72 is disposed. The projector 71 irradiates the measurement object Obj with slit-light of a lengthwise-slit shape which is output, for example, from a laser device while the photography mode. This projector 71 has a scanner 73a whose drive is controlled by a scan control section 73, and repeatedly performs shifting of the irradiation position for slit-light and irradiation of slit-light from the scanner 73a.

The camera 72 is composed of a taking lens 72a and an image sensor section 72b, and photographs the measurement image. In the photography mode, while an irradiation position of slit-light sequentially travels a range photographed as the measurement image, a large number of slit-lights whose irradiation positions are varied are photographed as one piece of measurement image, by performing charge-storage in the image sensor section 72b. By analyzing the measurement image photographed as described above, three-dimensional information of the measurement object Obj is calculated. Note that it may photograph one piece of measurement image whenever the irradiation position of slit-light moves.

Also in this example, it may perform the display of the pixel resolving power and the display of the satisfying range and the unsatisfying range, like the first to fourth embodiments described above, with consideration of photographing conditions such as the focal length of the camera 72, the object distance to the measurement object Obj, the pixel size of the measurement image and the base length which is the interval between the projector 71 and the camera 72.

Although the three-dimensional information device using

light-section method is described in the fifth embodiment, the present invention is not limited to this, and may be applied to various three-dimensional information devices that irradiates a measurement object with light from a projector, and photographs this image as a measurement image. For example, it may be applied to a constitution in which a lattice pattern is projected to a measurement object from a projector and a distorted lattice image in the work is photographed with a camera as a measurement image, and a constitution in which spot light irradiated to a measurement object from a projector is captured by a camera as a measurement image.

In the above embodiments, the photographing devices that photograph the measurement image are described, however, it may be a three-dimensional information obtaining device including the photographing device. For example, FIG.21 illustrates an example of a three-dimensional information obtaining device 80 in which the photographing device 10 is provided with a three-dimensional information analyzing section 81 for analyzing a parallax image. The three-dimensional information analyzing section 81 analyzes the parallax image and obtains three-dimensional information by calculation. In this analysis, the parallax of correspondence points in perspective images is obtained, so as to calculate the distance in the direction parallel to the optical axis of the taking lens (the distance in the depth direction) and coordinates in the plane direction that is perpendicular to the depth direction, based on this parallax, a pixel size of the each camera 11, 12, a focal length, an object distance and a camera interval (base length). The

calculated three-dimensional information is displayed in the display section 25 and recorded in the recording medium 27.

In addition, a computer may be connected to a camera that photographs plural perspective images, and may be connected to a device including a camera and a projector, as a constitution of the each embodiment described above.

CLAIMS

1. A photographing device comprising:

a measurement photography section which photographs a measurement image of a measurement object to obtain three-dimensional information;

a condition obtaining section which obtains a photographing condition for photographing the measurement image;

a pixel resolving power calculation section which calculates pixel resolving power based on the photographing condition;

a display section which displays the pixel resolving power that is calculated in the pixel resolving power calculation section;

a reference pixel resolving power obtaining section which obtains reference pixel resolving power for photographing the measurement image; and

a display control section which changes a display mode of the display section when it is detected that the pixel resolving power becomes out of a reference range determined based on the reference pixel resolving power.

2. The photographing device according to claim 1, wherein the display section displays a through image of the measurement image with the pixel resolving power.

3. The photographing device according to claim 1, wherein

the reference pixel resolving power obtaining section obtains the pixel resolving power corresponding to the measurement image photographed at the last time as the reference pixel resolving power.

4. The photographing device according to claim 1, further comprising:

a recording section that records the pixel resolving power or the photographing condition with the measurement image when the measurement image is photographed; and

a selecting section to select any measurement image from a plurality of the measurement images,

wherein the reference pixel resolving power obtaining section obtains pixel resolving power or photographing condition corresponding to the selected measurement image, and determines this pixel resolving power or pixel resolving power obtained from the photographing condition as the reference pixel resolving power.

5. The photographing device according to claim 4, wherein the display section reproduces and displays the measurement image selected by the selecting section.

6. The photographing device according to one of claims 1 to 5, further comprising a photographing condition range display section to display a condition range of the photographing condition for making the pixel resolving power become in the reference range when the calculated pixel resolving power is

out of the reference range at the time of setting the photographing condition.

7. The photographing device according to claim 6, wherein the photographing condition range display section displays a range out of the photographing condition range separately from the photographing condition range, in addition to the photographing condition range.

8. The photographing device according to one of claims 1 to 7, wherein

the measurement photography section has plural cameras to photograph each perspective image as the measurement image, and

the condition obtaining section obtains a focal length, an object distance, a pixel size, and a base length that is a distance between the cameras as the photographing condition.

9. The photographing device according to one of claims 1 to 7, further comprising a projector section which projects measuring beam on the measurement object,

wherein the measurement photography section photographs the measurement object being irradiated by the measuring beam.

10. A three-dimensional information measuring device comprising:

the photographing device according to one of claims 1 to 9; and

an analyzing section which calculates three-dimensional information based on the measurement image photographed by the photographing device.

11. A controlling method of a photographing device which photographs a measurement image of a measurement object for obtaining three-dimensional information comprising:

a calculation step for calculating pixel resolving power from a photographing condition of the measurement image;

a displaying step for displaying the pixel resolving power on a display section;

an obtaining step for obtaining reference pixel resolving power in photographing the measurement image;

a judgment step for judging whether the pixel resolving power becomes out of the reference range determined based on the reference pixel resolving power; and

a changing step for changing display mode of the pixel resolving power on the display section when the pixel resolving power becomes out of the reference range.

12. The controlling method of a photographing device according to claim 11, wherein a through image of the measurement image is displayed with the pixel resolving power in the displaying step.

13. The controlling method of a photographing device according to claim 11, wherein pixel resolving power of the measurement image photographed at the last time is obtained as

the reference pixel resolving power in the obtaining step.

14. The controlling method of a photographing device according to claim 11, further comprising:

a recording step for recording the pixel resolving power or the photographing condition with the measurement image when the measurement image is photographed; and

a selection step for selecting any measurement image from the plural measurement images,

wherein the pixel resolving power or the photographing condition of the selected measurement image is obtained, and this pixel resolving power or pixel resolving power obtained from the photographing condition is determined as the reference pixel resolving power in the reference pixel resolving power obtaining step.

15. The controlling method of a photographing device according to claim 14, wherein the selected measurement image is reproduced and displayed on the display section.

16. The controlling method of a photographing device according to one of claims 11 to 15, further comprising:

a setting step for setting at least one of the plural photographing conditions; and

a range displaying step for displaying a condition range of the photographing condition for making the pixel resolving power become in the reference range when the pixel resolving power calculated in the calculation step is out of the reference

range.

17. The controlling method of a photographing device according to claim 16, wherein a range out of the photographing condition range is displayed separately from the photographing condition range, in addition to the photographing condition range in the range displaying step.

18. The controlling method of a photographing device according to one of claims 11 to 17, further comprising a photographing step for photographing plural perspective images from different viewpoints as the measurement image with use of plural cameras.

19. The controlling method of a photographing device according to one of claims 11 to 17, further comprising a photographing step for photographing the measurement object irradiated by measurement light.

ABSTRACT

To make it easy to recognize that pixel resolving power is changed during photography operation.

A first camera and a second camera photograph two perspective images. A pixel resolving power calculation section 31 calculates pixel resolving power for photographing the two perspective images, based on a focal length, a base length, an object distance and a pixel size. In a reference pixel resolving power memorizing section 54, reference pixel resolving power is memorized. In a display section 25, the calculated pixel resolving power is displayed. A display control section 52 performs normal display of the pixel resolving power when the pixel resolving power is maintained to be no less than reference pixel resolving power, and performs highlighting display of the pixel resolving power when the pixel resolving power became a value lower than the reference pixel resolving power during photography operation.

UNITED STATES PATENT AND TRADEMARK OFFICE

UNITED STATES DEPARTMENT OF COMMERCE
United States Patent and Trademark Office
Address: COMMISSIONER FOR PATENTS
P.O. Box 1450
Alexandria, Virginia 22313-1450
www.uspto.gov

APPLICATION NO.	FILING DATE	FIRST NAMED INVENTOR	ATTORNEY DOCKET NO.	CONFIRMATION NO.
13/143,490	07/06/2011	Tsuyoshi Himori	043888-0900	6043

53080 7590 11/03/2011
MCDERMOTT WILL & EMERY LLP
600 13TH STREET, NW
WASHINGTON, DC 20005-3096

EXAMINER

ART UNIT	PAPER NUMBER
2835	

NOTIFICATION DATE	DELIVERY MODE
11/03/2011	ELECTRONIC

Please find below and/or attached an Office communication concerning this application or proceeding.

The time period for reply, if any, is set in the attached communication.

Notice of the Office communication was sent electronically on above-indicated "Notification Date" to the following e-mail address(es):

mweipdocket@mwe.com

UNITED STATES PATENT AND TRADEMARK OFFICE

Commissioner for Patents
United States Patent and Trademark Office
P.O. Box 1450
Alexandria, VA 22313-1450
www.uspto.gov

MCDERMOTT WILL & EMERY LLP
600 13TH STREET, NW
WASHINGTON DC 20005-3096

***In re* Application of**	**: DECISION ON REQUEST TO**
HIMORI, *et al.*	**: PARTICIPATE IN THE PATENT**
Application No.: 13/143,490	**: PROSECUTION HIGHWAY**
Filed: 06 July 2011	**: PROGRAM AND PETITION**
Attorney Docket No.: 043888-0900	**: TO MAKE SPECIAL UNDER**
For: MULTILAYER WIRING SUBSTRATE AND MANUFACTURING METHOD OF MULTILAYER WIRING SUBSTRATE	**: 37 CFR 1.102(a)**

This is a decision on the request to participate in the Patent Prosecution Highway (PPH) program and the petition under 37 CFR 1.102(a), filed 29 July 2011, to make the above-identified application special.

The request and petition are **GRANTED**.

Discussion

A grantable request to participate in the PPH pilot program and petition to make special require:

1. The U.S. application is

    a. a Paris Convention application which either
        i. validly claims priority under 35 U.S.C. 119(a) and 37 CFR 1.55 to one or more applications filed in the JPO, or
        ii. validly claims priority to a PCT application that contains no priority claims, or
    b. a national stage application under the PCT (an application which entered the national stage in the U.S. from a PCT international application after compliance with 35 U.S.C. 371), which PCT application
        i. validly claims priority to an application filed in the JPO, or
        ii. validly claims priority to a PCT application that contains no priority claims, or
        iii. contains no priority claim, or
    c. a so-called bypass application filed under 35 U.S.C. 111(a) which validly claims benefit under 35 U.S.C. 120 to a PCT application, which PCT application
        i. validly claims priority to an application filed in the JPO, or
        ii. validly claims priority to a PCT application that contains no priority claims, or

iii. contains no priority claim;

2. Applicant must submit a copy of:
    a. The allowable/patentable claim(s) from the JPO application(s);
    b. An English translation of the allowable/patentable claim(s) and
    c. A statement that the English translation is accurate;
3. Applicant must:
    a. Ensure all the claims in the U.S. application must sufficiently correspond or be amended to sufficiently correspond to the allowable/patentable claim(s) in the JPO application(s) and
    b. Submit a claims correspondence table in English;
4. Examination of the U.S. application has <u>not</u> begun;
5. Applicant must submit:
    a. Documentation of prior office action:
        i. a copy of the office action(s) just prior to the "Decision to Grant a Patent" from each of the JPO application(s) containing the allowable/patentable claim(s) or
        ii. if the allowable/patentable claims(s) are from a "Notification of Reasons for Refusal" then the Notification of Reasons for Refusal or
        iii. if the JPO application is a first action allowance then no office action from the JPO is necessary should be indicated on the request/petition form;
    b. An English language translation of the JPO Office action from (5)(a)(i)-(ii) above
    c. A statement that the English translation is accurate;
6. Applicant must submit:
    a. An IDS listing the documents cited by the JPO examiner in the JPO office action (unless already submitted in this application)
    b. Copies of the documents except U.S. patents or U.S. patent application publications (unless already submitted in this application);

The request to participate in the PPH pilot program and petition comply with the above requirements. Accordingly, the above-identified application has been accorded "special" status.

Inquiries concerning this decision should be directed to Michael Day at 571-272-1568.

All other inquiries concerning the examination or status of the application is accessible in the PAIR system at http://www.uspto.gov/ebc.index.html.

This application will be forwarded to the examiner for action on the merits commensurate with this decision once this application's formality reviews have been completed.

/Michael Day/

Michael Day
Quality Assurance Specialist
Technology Center 2800

UNITED STATES PATENT AND TRADEMARK OFFICE

Commissioner for Patents
United States Patent and Trademark Office
P.O. Box 1450
Alexandria, VA 22313-1450
www.uspto.gov

OBLON, SPIVAK, MCCLELLAND MAIER & NEUSTADT, L.L.P.
1940 DUKE STREET
ALEXANDRIA, VA 22314

MAILED
APR 10 2012
OFFICE OF PETITIONS

In re Application of Moriya et al. :
Application No. 13/143,554 :
Int'l Filing Date: January 22, 2010 : Decision on Request
Attorney Docket No. 374997US28PCT :
Pub. No. US 2011/0274165 A1 :
Pub. Date: November 10, 2011 :

This is a decision on the request for a corrected patent application publication under 37 C.F.R. § 1.221(b) filed January 10, 2012.

The request is **dismissed**.

Applicants request the application be republished because of an alleged mistake in the patent application publication identified in the request.

37 C.F.R. § 1.221(b) states,

> [Relief under 37 C.F.R. § 1.221 is warranted] only when the Office makes a material mistake which is apparent from Office records.... Any request for corrected publication or revised patent application publication other than provided in paragraph (a) of this section must be filed within two months from the date of the patent application publication. This period is not extendable.

A mistake is only a "material" mistake if the mistake affects the public's ability to appreciate the technical disclosure of the patent application publication, determine the scope of the patent application publication, or determine the scope of the provisional rights that an applicant may seek to enforce upon issuance of a patent.[1]

The mistake identified in the instant request is not a material mistake as required under 37 C.F.R. § 1.221(b). Specifically, the mistake does not affect the public's ability to appreciate the technical disclosure of the patent application publication, determine the scope of the patent

[1] *See* Changes to Implement Eighteen-Month Publication of Patent Applications; Final Rule, 65 Fed. Reg. 57023, 57038 (Sept. 20, 2000), 1239 Off. Gaz. Pat. Office 63, 75 (Oct. 10, 2000). *See also* Section 1130 of the Manual of Patent Examining Procedure (8th ed., Rev. 8, July 2010).

application publication, or determine the scope of the provisional rights that an applicant may seek to enforce upon issuance of a patent. *See* MPEP § 1130(B).

The mistake is not an Office error because the Office may select which drawing is to be published on the front page of the publication. While 37 C.F.R. § 1.84(j) permits an Applicant to suggest a Figure for the front page of the publication, the Office is not bound by Applicant's suggestion.[2]

In view of the prior discussion, relief under 37 C.F.R. § 1.221(b) is unwarranted and the request is dismissed.

Applicants are advised that a "request for republication of an application previously published" may be filed under 37 C.F.R. § 1.221(a). The request must include a copy of the application, which complies with the Office's electronic filing system requirements, the publication fee set forth in 37 C.F.R. § 1.18(d), and the required processing fee set forth in 37 C.F.R. § 1.17(i).

If the request for republication does not comply with the electronic filing system requirements, the republication will not take place and the publication fee set forth in 37 C.F.R. § 1.18(d) will be refunded. However, the processing fee will be retained.

Guidance for filing a request for a Pre-Grant Publication, such as a request for republication, may be found at the links below:

http://www.uspto.gov/patents/process/file/efs/guidance/index.jsp

http://www.uspto.gov/ebc/portal/efs/pgpub_quickstart.pdf

Any request for republication under 37 C.F.R. § 1.221(a), must be submitted via the EFS system as a "Pre-Grant Publication" and questions or any request for reconsideration of the instant decision should be addressed as follows:

By mail to: Mail Stop PGPUB
Commissioner for Patents
P.O. Box 1450
Alexandria, Va. 22313-1450

Telephone inquiries regarding this communication should be directed to Senior Petitions Attorney Steven Brantley at (571) 272-3203.

Christopher Bottorff
Petitions Examiner
Office of Petitions

[2] *Id.* at 57032.

UNITED STATES PATENT AND TRADEMARK OFFICE

Commissioner for Patents
United States Patent and Trademark Office
P.O. Box 1450
Alexandria, VA 22313-1450
www.uspto.gov

DINSMORE & SHOHL LLP
FIFTH THIRD CENTER, ONE SOUTH MAIN STREET
SUITE 1300
DAYTON, OH 45402-2023

MAILED

FEB 22 2012

OFFICE OF PETITIONS

In re Application of	:	
Pingsha Dong, et al.	:	
Application Number: 13/143,630	:	DECISION ON PETITION
Filing Date: August 4, 2011	:	UNDER 37 CFR 1.78(a)(6)
Attorney Docket No.: BAT 16003 PA/40078.434	:	

This is a decision on the petition, filed on January 9, 2012, which is treated as a petition filed under 37 CFR §§ 1.78(a)(6), to accept an unintentionally delayed claim under 35 U.S.C. § 119(e) for the benefit of the prior-filed application set forth in the concurrently filed amendment.

The petition is **GRANTED.**

A petition for acceptance of a claim for late priority under 37 CFR § 1.78(a)(6) is only applicable to those applications filed on or after November 29, 2000. Further, the petition is appropriate only after the expiration of the period specified in 37 CFR §§ 1.78(a)(5)(ii). In addition, the petition under 37 CFR §§ 1.78(a)(6) must be accompanied by:

(1) the reference required by 35 U.S.C. § 119(e) and 37 CFR § 1.78(a)(5)(i) of the prior-filed applications, unless previously submitted;
(2) the surcharge set forth in § 1.17(t); and
(3) a statement that the entire delay between the date the claim was due under 37 CFR § 1.78(a)(5)(ii) and the date the claim was filed was unintentional. The Director may require additional information where there is a question whether the delay was unintentional.

Additionally, the instant nonprovisional application must be pending at the time of filing of the reference to the prior-filed provisional application as required by 37 CFR 1.78(a)(5)(ii). Further, the international application claiming the benefit of the prior-filed provisional application must have been filed within twelve months of the filing date of the prior-filed provisional application. All the above requirements having been satisfied, the late claim for benefit of priority under 35 U.S.C. § 119(e) is accepted as being unintentionally delayed.

The granting of the petition to accept the delayed benefit claim to the prior-filed application under 37 CFR § 1.78(a)(6) should not be construed as meaning that this application is entitled to the benefit of the filing date of the prior-filed application. In order for this application to be entitled to the benefit of the prior-filed application, all other requirements under 35 U.S.C.

§119(e) and 37 CFR 1.78(a)(4) and (a)(5) must be met. Similarly, the fact that the corrected Filing Receipt accompanying this decision on petition includes the prior-filed application should not be construed as meaning that applicant is entitled to the claim for benefit of priority to the prior-filed application noted thereon. Accordingly, the examiner will, in due course, consider this benefit claim and determine whether the application is entitled to the benefit of the earlier filing date.

A corrected Filing Receipt, which includes the priority claim to the prior-filed application, accompanies this decision on petition.

Any questions concerning this matter may be directed to the undersigned at (571) 272-3204. All other inquiries concerning either the examination procedures or status of the application should be directed to the Technology Center.

This application is being forwarded to Technology Center Art Unit 2857 for consideration by the examiner of the claim under 35 U.S.C. § 119(e) of the prior-filed provisional application.

Sherry D. Brinkley
Petitions Examiner
Office of Petitions

ATTACHMENT : Corrected Filing Receipt

UNITED STATES PATENT AND TRADEMARK OFFICE

UNITED STATES DEPARTMENT OF COMMERCE
United States Patent and Trademark Office
Address: COMMISSIONER FOR PATENTS
P.O. Box 1450
Alexandria, Virginia 22313-1450
www.uspto.gov

APPLICATION NUMBER	FILING or 371(c) DATE	GRP ART UNIT	FIL FEE REC'D	ATTY.DOCKET.NO	TOT CLAIMS	IND CLAIMS
13/143,630	08/04/2011	2857	1868	BAT 16003 PA/40078.434	3	3

CONFIRMATION NO. 7460

CORRECTED FILING RECEIPT

23368
DINSMORE & SHOHL LLP
FIFTH THIRD CENTER, ONE SOUTH MAIN STREET
SUITE 1300
DAYTON, OH 45402-2023

OC000000052508565

Date Mailed: 02/09/2012

Receipt is acknowledged of this non-provisional patent application. The application will be taken up for examination in due course. Applicant will be notified as to the results of the examination. Any correspondence concerning the application must include the following identification information: the U.S. APPLICATION NUMBER, FILING DATE, NAME OF APPLICANT, and TITLE OF INVENTION. Fees transmitted by check or draft are subject to collection. Please verify the accuracy of the data presented on this receipt. **If an error is noted on this Filing Receipt, please submit a written request for a Filing Receipt Correction. Please provide a copy of this Filing Receipt with the changes noted thereon. If you received a "Notice to File Missing Parts" for this application, please submit any corrections to this Filing Receipt with your reply to the Notice. When the USPTO processes the reply to the Notice, the USPTO will generate another Filing Receipt incorporating the requested corrections**

Applicant(s)

Pingsha Dong, Columbus, OH;
Zhigang Wei, Ann Arbor, MI;
Jeong K. Hong, Dublin, OH;

Assignment For Published Patent Application

BATTELLE MEMORIAL INSTITUTE, Columbus, OH

Power of Attorney: The patent practitioners associated with Customer Number 23368

Domestic Priority data as claimed by applicant

This application is a 371 of PCT/US09/62780 10/30/2009
which claims benefit of 61/143,231 01/08/2009

Foreign Applications (You may be eligible to benefit from the **Patent Prosecution Highway** program at the USPTO. Please see http://www.uspto.gov for more information.)

If Required, Foreign Filing License Granted: 08/16/2011

The country code and number of your priority application, to be used for filing abroad under the Paris Convention, is **US 13/143,630**

Projected Publication Date: Not Applicable

Non-Publication Request: No

Early Publication Request: No

Title

Path-Dependent Cycle Counting And Multi-Axial Fatigue Evaluation Of Engineering Structures

Preliminary Class

702

PROTECTING YOUR INVENTION OUTSIDE THE UNITED STATES

Since the rights granted by a U.S. patent extend only throughout the territory of the United States and have no effect in a foreign country, an inventor who wishes patent protection in another country must apply for a patent in a specific country or in regional patent offices. Applicants may wish to consider the filing of an international application under the Patent Cooperation Treaty (PCT). An international (PCT) application generally has the same effect as a regular national patent application in each PCT-member country. The PCT process **simplifies** the filing of patent applications on the same invention in member countries, but **does not result** in a grant of "an international patent" and does not eliminate the need of applicants to file additional documents and fees in countries where patent protection is desired.

Almost every country has its own patent law, and a person desiring a patent in a particular country must make an application for patent in that country in accordance with its particular laws. Since the laws of many countries differ in various respects from the patent law of the United States, applicants are advised to seek guidance from specific foreign countries to ensure that patent rights are not lost prematurely.

Applicants also are advised that in the case of inventions made in the United States, the Director of the USPTO must issue a license before applicants can apply for a patent in a foreign country. The filing of a U.S. patent application serves as a request for a foreign filing license. The application's filing receipt contains further information and guidance as to the status of applicant's license for foreign filing.

Applicants may wish to consult the USPTO booklet, "General Information Concerning Patents" (specifically, the section entitled "Treaties and Foreign Patents") for more information on timeframes and deadlines for filing foreign patent applications. The guide is available either by contacting the USPTO Contact Center at 800-786-9199, or it can be viewed on the USPTO website at http://www.uspto.gov/web/offices/pac/doc/general/index.html.

For information on preventing theft of your intellectual property (patents, trademarks and copyrights), you may wish to consult the U.S. Government website, http://www.stopfakes.gov. Part of a Department of Commerce initiative, this website includes self-help "toolkits" giving innovators guidance on how to protect intellectual property in specific countries such as China, Korea and Mexico. For questions regarding patent enforcement issues, applicants may call the U.S. Government hotline at 1-866-999-HALT (1-866-999-4158).

LICENSE FOR FOREIGN FILING UNDER

Title 35, United States Code, Section 184

Title 37, Code of Federal Regulations, 5.11 & 5.15

GRANTED

The applicant has been granted a license under 35 U.S.C. 184, if the phrase "IF REQUIRED, FOREIGN FILING LICENSE GRANTED" followed by a date appears on this form. Such licenses are issued in all applications where the conditions for issuance of a license have been met, regardless of whether or not a license may be required as

set forth in 37 CFR 5.15. The scope and limitations of this license are set forth in 37 CFR 5.15(a) unless an earlier license has been issued under 37 CFR 5.15(b). The license is subject to revocation upon written notification. The date indicated is the effective date of the license, unless an earlier license of similar scope has been granted under 37 CFR 5.13 or 5.14.

This license is to be retained by the licensee and may be used at any time on or after the effective date thereof unless it is revoked. This license is automatically transferred to any related applications(s) filed under 37 CFR 1.53(d). This license is not retroactive.

The grant of a license does not in any way lessen the responsibility of a licensee for the security of the subject matter as imposed by any Government contract or the provisions of existing laws relating to espionage and the national security or the export of technical data. Licensees should apprise themselves of current regulations especially with respect to certain countries, of other agencies, particularly the Office of Defense Trade Controls, Department of State (with respect to Arms, Munitions and Implements of War (22 CFR 121-128)); the Bureau of Industry and Security, Department of Commerce (15 CFR parts 730-774); the Office of Foreign AssetsControl, Department of Treasury (31 CFR Parts 500+) and the Department of Energy.

NOT GRANTED

No license under 35 U.S.C. 184 has been granted at this time, if the phrase "IF REQUIRED, FOREIGN FILING LICENSE GRANTED" DOES NOT appear on this form. Applicant may still petition for a license under 37 CFR 5.12, if a license is desired before the expiration of 6 months from the filing date of the application. If 6 months has lapsed from the filing date of this application and the licensee has not received any indication of a secrecy order under 35 U.S.C. 181, the licensee may foreign file the application pursuant to 37 CFR 5.15(b).

SelectUSA

The United States represents the largest, most dynamic marketplace in the world and is an unparalleled location for business investment, innovation and commercialization of new technologies. The USA offers tremendous resources and advantages for those who invest and manufacture goods here. Through SelectUSA, our nation works to encourage, facilitate, and accelerate business investment. To learn more about why the USA is the best country in the world to develop technology, manufacture products, and grow your business, visit SelectUSA.gov.

UNITED STATES PATENT AND TRADEMARK OFFICE

Commissioner for Patents
United States Patent and Trademark Office
P.O. Box 1450
Alexandria, VA 22313-1450
www.uspto.gov

MAILED

AUG 22 2011

PCT LEGAL ADMINISTRATION

SCHMEISER, OLSEN & WATTS
22 CENTURY HILL DRIVE
SUITE 302
LATHAM NY 12110

In re Application of	:	
REIBKE, et al.	:	DECISION ON PETITION
Application No.: 13/143,647	:	
PCT No.: PCT/EP2010/000020	:	UNDER 37 CFR 1.137(b)
Int. Filing Date: 05 January 2010	:	
Priority Date: 06 January 2009	:	
Atty. Docket No.: MHP.50025-NY	:	
For: ELECTRIC CONNECTION TERMINAL FOR	:	
GUIDING A CIRCUIT THROUGH A WALL	:	

The petition to revive under 37 CFR 1.137(b) filed 07 July 2011 in the above-captioned application is hereby **GRANTED** as follows:

Applicant's statement that "the entire delay in filing the required reply form the due date for the required reply until the filing of a grantable petition under 37 CFR 1.137(b) was unintentional" and the prompt filing of the petition satisfies the requirement of 37 CFR 1.137(b)(3).

A review of the application file reveals that applicant has provided the proper reply in the form of payment of the full, U.S. Basic National Fee. Therefore, the request to revive the application abandoned under 35 U.S.C. 371(d) is granted as to the National stage in the United States of America.

This application is being returned to the United States Designated/Elected Office (DO/EO/US) for treatment in accordance with this decision.

Derek A. Putonen
Attorney Advisor
Office of PCT Legal Administration
Tel: (571) 272-3294

UNITED STATES PATENT AND TRADEMARK OFFICE

Commissioner for Patents
United States Patent and Trademark Office
P.O. Box 1450
Alexandria, VA 22313-1450
www.uspto.gov

MAILED

NOV 08 2011

PCT LEGAL ADMINISTRATION

OLIFF & BERRIDGE, PLC
P.O. BOX 320850
ALEXANDRIA VA 22320-4850

In re Application of	:	
STEVENS, Aaron J.	:	
Application No.: 13/143,669	:	DECISION
PCT No.: PCT/EP2010/000269	:	
Int. Filing Date: 19 January 2010	:	
Priority Date: 17 February 2009	:	
Attorney's Docket No.: 150083	:	
For: SYSTEM FOR VERIFYING THE INTEGRITY	:	
OF AN ELECTRICAL UNION	:	

This is a decision on applicant's submission filed 27 September 2011, which has properly been treated as a petition under 37 CFR 1.182. The petition is **GRANTED** as discussed below.

On 07 July 2011, applicant filed national stage papers in the United States Designated/Elected Office (DO/EO/US) electronically via EFS-Web. The submission included, *inter alia*, a Transmittal Letter, an Application Data Sheet (ADS), and a declaration of inventors. The international application number keyed into EFS-Web was PCT/JP2010/000269. The Transmittal Letter, the ADS, and the declaration indicate the international application number as PCT/EP2010/000269.

On 27 September 2011, applicant filed the instant submission requesting that the instant application be accepted as the national stage application under 35 U.S.C. 371 of international application number PCT/EP2010/000269.

A petition under 37 CFR 1.182 is required to correct the record with regard to an incorrect international application number. The petition must include the following: (1) payment of the $400 petition fee; (2) an indication that the correct international application number was included somewhere in the national stage application papers filed prior to the expiration of thirty months from the priority date; and (3) a statement indicating the correct international application number.

As to item (1), the petition fee under 37 CFR 1.17(f) has been charged to Deposit Account 15-0461.

As to item (2), as noted above, international application number PCT/EP2010/000269 appears in the national stage application papers filed 07 July 2011.

As to item (3), petitioner identifies the correct international application number in the petition.

A review of the application file including counsel's statements in the instant submission, as well as a review of the international publication of PCT/EP2010/000269, reveals that the present application should in fact be the national stage application of international application **PCT/EP2010/000269**.

This application is being forwarded to the National Stage Processing Branch of the Office of PCT Operations to continue national stage processing of the application.

/Daniel Stemmer/

Daniel Stemmer
Legal Examiner
PCT Legal Affairs
Office of Patent Cooperation Treaty
Legal Administration
Telephone: (571) 272-3301

REQUEST FOR PARTICIPATION IN THE PATENT COOPERATION TREATY - PATENT PROSECUTION HIGHWAY (PCT-PPH) PILOT PROGRAM BETWEEN THE JAPAN PROPERTY OFFICE (JPO) AND THE USPTO

Application No.:	13/143,673	Filing Date:	July 7, 2011
Confirmation No.:	7810	Attorney Docket No.:	Q125262
First Named Inventor:	Kota IWAMOTO		
Title of the Invention:	TIME SEGMENT REPRESENTATIVE FEATURE VECTOR GENERATION DEVICE		

THIS REQUEST FOR PARTICIPATION IN THE PCT-PPH PILOT PROGRAM ALONG WITH THE REQUIRED DOCUMENTS MUST BE SUBMITTED VIA EFS-WEB. INFORMATION REGARDING EFS-WEB IS AVAILABLE AT HTTP://WWW.USPTO.GOV/EBC/EFS_HELP.HTML.

APPLICANT HEREBY REQUESTS PARTICIPATION IN THE PCT-PPH PILOT PROGRAM AND PETITIONS TO MAKE THE ABOVE-IDENTIFIED APPLICATION SPECIAL UNDER THE PCT-PPH PILOT PROGRAM.

The above-identified application is (1) a national stage entry of the corresponding PCT application, or (2) a national stage entry of another PCT application which claims priority to the corresponding PCT application, or (3) a national application that claims domestic/ foreign priority to the corresponding PCT application, or (4) a national application which forms the basis for the priority claim in the corresponding PCT application, or (5) a continuing application of a U.S. application that satisfies one of (1) to (4) above, or (6) a U.S. application that claims domestic benefit to a U.S. provisional application which forms the basis for the priority claim in the corresponding PCT application.

The corresponding PCT application number(s) is/are: PCT/JP2010/000247

The international date of the corresponding PCT application(s) is/are: January 19, 2010

I. List of Required Documents:

a. A copy of the latest international work product (WO/ISA, WO/IPEA, or IPER) in the above–identified corresponding PCT application(s)

☑ Is attached.

☐ Is not attached because the document is already in the U.S. application.

b. A copy of all claims which were indicated as having novelty, inventive step and industrial applicability in the above-identified corresponding PCT application(s)

☑ Is attached.

☐ Is not attached because the document is already in the U.S. application.

c. English translations of the documents in a. and b. above are attached (if the documents are not in the English language). A statement that the English translation is accurate is attached for the document in b. above.

d. (1) An information disclosure statement listing the documents cited in international work products (ISR, WO/ISA, WO/IPEA, IPER) of the corresponding PCT application

☐ Is attached.

☑ Has already been filed in the above-identified U.S. application on July 7, 2011

(2) Copies of all documents (except for U.S. patents or U.S. patent application publications)

☐ Are attached.

☑ Have already been filed in the above-identified U.S. application on July 7, 2011

REQUEST FOR PARTICIPATION IN THE PATENT COOPERATION TREATY - PATENT PROSECUTION HIGHWAY (PCT-PPH) PILOT PROGRAM

BETWEEN THE JAPAN PROPERTY OFFICE (JPO) AND THE USPTO

(continued)

Application No.:	13/143,673
First Named Inventor:	Kota IWAMOTO

II. Claims Correspondence Table:

Claims in US Application	Patentable Claims in the corresponding PCT Application	Explanation regarding the correspondence
1	1	Both are the same except differences due to translations, respectively.
2	2	Both are the same, respectively.
3	3	Both are the same, respectively.
4	4	Both are the same except difference due to translations and claims they refer to, respectively; note that patentable claim 4 was multiple dependent. This claim depends only from patentable claim 1.
5	5	Both are the same except difference due to translations and claims they refer to, respectively; note that patentable claim 5 was multiple dependent. This claim depends only from patentable claim 1.
6	6	Both are the same except differences due to translations, respectively.
8	8	Both are the same except difference due to translations and claims they refer to, respectively; note that patentable claim 8 was multiple dependent. This claim depends only from patentable claim 1.
9	9	Both are the same except differences due to translations, respectively.
10	10	Both are the same, respectively.
11	11	Both are the same, respectively.
12	12	Both are the same, respectively.
13	13	Both are the same except claims they refer to, respectively; note that patentable claim 13 was multiple dependent. This claim depends only from patentable claim 10.
14	14	Both are the same except claims they refer to, respectively; note that patentable claim 14 was multiple dependent. This claim depends only from patentable claim 10.
15	15	Both are the same, respectively.
17	17	Both are the same except claims they refer to, respectively; note that patentable claim 17 was multiple dependent. This claim depends only from patentable claim 10.
18	18	Both are the same, respectively.
19	19	Both are the same except differences due to translations, respectively.

III. All the claims in the US application sufficiently correspond to the patentable claims in the corresponding PCT application.

IV. Payment of Fees:

☑ **The USPTO is directed and authorized to charge all required fees, except for the Issue Fee and the Publication Fee to Deposit Account No. 19-4880. Please also credit any overpayments to said Deposit Account.**

☐ **Credit Card.**

SEND ALL CORRESPONDENCE TO:
The address associated with Customer Number:

WASHINGTON OFFICE
23373
CUSTOMER NUMBER

Signature	/ Carl J. Pellegrini /	Date	August 9, 2011
Name (Print/Typed)	Carl J. Pellegrini	Registration Number	40,766

STATEMENT

I, Motohiro BABA of BABA International Patent Office, 2nd Fl., Ishii Bldg., 25-1, Sugawara-machi, Kawagoe-shi, Saitama, 350-0046, JAPAN hereby state that I am conversant in both the Japanese and English languages and certify to the best of my knowledge and belief that the attached is a true and accurate translation of claims of PCT Application No. PCT/JP2010/000247 as of the date of the latest international work product, a WO/IPER of December 21, 2010.

Signature: Motohiro Baba

Motohiro BABA

Dated: June 14, 2011

INTERNATIONAL SEARCH REPORT

International application No.
PCT/JP2010/000247

A. CLASSIFICATION OF SUBJECT MATTER
H04N5/76(2006.01)i, *G06F17/30*(2006.01)i, *H04N5/91*(2006.01)i

According to International Patent Classification (IPC) or to both national classification and IPC

B. FIELDS SEARCHED

Minimum documentation searched (classification system followed by classification symbols)
H04N5/76, G06F17/30, H04N5/91

Documentation searched other than minimum documentation to the extent that such documents are included in the fields searched

Jitsuyo Shinan Koho	1922-1996	Jitsuyo Shinan Toroku Koho	1996-2010
Kokai Jitsuyo Shinan Koho	1971-2010	Toroku Jitsuyo Shinan Koho	1994-2010

Electronic data base consulted during the international search (name of data base and, where practicable, search terms used)

C. DOCUMENTS CONSIDERED TO BE RELEVANT

Category*	Citation of document, with indication, where appropriate, of the relevant passages	Relevant to claim No.
X Y A	JP 2007-336106 A (Osaka University), 27 December 2007 (27.12.2007), paragraphs [0099] to [0103] (Family: none)	1,2,4-6,10, 11,13-15,19 8,9,17,18 3,7,12,16
Y	JP 2002-44610 A (Nippon Telegraph And Telephone Corp.), 08 February 2002 (08.02.2002), paragraph [0014] & US 2001/0043659 A1 & EP 1161098 A2	8,9,17,18

☐ Further documents are listed in the continuation of Box C. ☐ See patent family annex.

* Special categories of cited documents:
"A" document defining the general state of the art which is not considered to be of particular relevance
"E" earlier application or patent but published on or after the international filing date
"L" document which may throw doubts on priority claim(s) or which is cited to establish the publication date of another citation or other special reason (as specified)
"O" document referring to an oral disclosure, use, exhibition or other means
"P" document published prior to the international filing date but later than the priority date claimed
"T" later document published after the international filing date or priority date and not in conflict with the application but cited to understand the principle or theory underlying the invention
"X" document of particular relevance; the claimed invention cannot be considered novel or cannot be considered to involve an inventive step when the document is taken alone
"Y" document of particular relevance; the claimed invention cannot be considered to involve an inventive step when the document is combined with one or more other such documents, such combination being obvious to a person skilled in the art
"&" document member of the same patent family

Date of the actual completion of the international search 19 February, 2010 (19.02.10)	Date of mailing of the international search report 02 March, 2010 (02.03.10)
Name and mailing address of the ISA/ Japanese Patent Office Facsimile No.	Authorized officer Telephone No.

特 許 協 力 条 約

ＰＣＴ

国際調査報告

（法８条、法施行規則第 40、41 条）
〔ＰＣＴ18 条、ＰＣＴ規則 43、44〕

出願人又は代理人の書類記号　N00054WO	今後の手続きについては、様式ＰＣＴ／ＩＳＡ／２２０及び下記５を参照すること。	
国際出願番号 ＰＣＴ／ＪＰ２０１０／０００２４７	国際出願日 (日.月.年)　１９．０１．２０１０	優先日 (日.月.年)　２９．０１．２００９
出願人（氏名又は名称） 日本電気株式会社		

国際調査機関が作成したこの国際調査報告を法施行規則第41条（ＰＣＴ18条）の規定に従い出願人に送付する。
この写しは国際事務局にも送付される。

この国際調査報告は、全部で ２ ページである。

☐ この調査報告に引用された先行技術文献の写しも添付されている。

１．国際調査報告の基礎
ａ．言語に関し、この国際調査は以下のものに基づき行った。
☑ 出願時の言語による国際出願
☐ 出願時の言語から国際調査のための言語である ＿＿＿＿＿＿ 語に翻訳された、この国際出願の翻訳文（ＰＣＴ規則12.3(a)及び23.1(b)）

ｂ．☐ この国際調査報告は、ＰＣＴ規則91の規定により国際調査機関が認めた又は国際調査機関に通知された明らかな誤りの訂正を考慮して作成した（ＰＣＴ規則43.6の2(a)）。

ｃ．☐ この国際出願は、ヌクレオチド又はアミノ酸配列を含んでいる（第Ｉ欄参照）。

２．☐ 請求の範囲の一部の調査ができない（第Ⅱ欄参照）。

３．☐ 発明の単一性が欠如している（第Ⅲ欄参照）。

４．発明の名称は
☑ 出願人が提出したものを承認する。
☐ 次に示すように国際調査機関が作成した。

＿＿＿＿＿＿＿＿＿＿＿＿＿＿＿＿

５．要約は
☑ 出願人が提出したものを承認する。
☐ 第Ⅳ欄に示されているように、法施行規則第47条第１項（ＰＣＴ規則38.2）の規定により国際調査機関が作成した。出願人は、この国際調査報告の発送の日から１月以内にこの国際調査機関に意見を提出することができる。

６．図面に関して
ａ．要約書とともに公表される図は、
第 １ 図とする。☑ 出願人が示したとおりである。
☐ 出願人は図を示さなかったので、国際調査機関が選択した。
☐ 本図は発明の特徴を一層よく表しているので、国際調査機関が選択した。

ｂ．☐ 要約とともに公表される図はない。

国際調査報告

国際出願番号　ＰＣＴ／ＪＰ２０１０／０００２４７

Ａ．　発明の属する分野の分類（国際特許分類（ＩＰＣ））

Int.Cl.　H04N5/76(2006.01)i, G06F17/30(2006.01)i, H04N5/91(2006.01)i

Ｂ．　調査を行った分野

調査を行った最小限資料（国際特許分類（ＩＰＣ））

Int.Cl.　H04N5/76, G06F17/30, H04N5/91

最小限資料以外の資料で調査を行った分野に含まれるもの

日本国実用新案公報	１９２２－１９９６年
日本国公開実用新案公報	１９７１－２０１０年
日本国実用新案登録公報	１９９６－２０１０年
日本国登録実用新案公報	１９９４－２０１０年

国際調査で使用した電子データベース（データベースの名称、調査に使用した用語）

Ｃ．　関連すると認められる文献

引用文献のカテゴリー＊	引用文献名　及び一部の箇所が関連するときは、その関連する箇所の表示	関連する請求項の番号
X	JP 2007-336106 A (国立大学法人大阪大学) 2007.12.27, 段落 99-103 (ファミリーなし)	1,2,4-6,10,11,13-15,19
Y		8,9,17,18
A		3,7,12,16
Y	JP 2002-44610 A (日本電信電話株式会社) 2002.02.08, 段落 14 & US 2001/0043659 A1 & EP 1161098 A2	8,9,17,18

☐　Ｃ欄の続きにも文献が列挙されている。

☐　パテントファミリーに関する別紙を参照。

＊　引用文献のカテゴリー

「Ａ」特に関連のある文献ではなく、一般的技術水準を示すもの

「Ｅ」国際出願日前の出願または特許であるが、国際出願日以後に公表されたもの

「Ｌ」優先権主張に疑義を提起する文献又は他の文献の発行日若しくは他の特別な理由を確立するために引用する文献（理由を付す）

「Ｏ」口頭による開示、使用、展示等に言及する文献

「Ｐ」国際出願日前で、かつ優先権の主張の基礎となる出願の日の後に公表された文献

「Ｔ」国際出願日又は優先日後に公表された文献であって出願と矛盾するものではなく、発明の原理又は理論の理解のために引用するもの

「Ｘ」特に関連のある文献であって、当該文献のみで発明の新規性又は進歩性がないと考えられるもの

「Ｙ」特に関連のある文献であって、当該文献と他の１以上の文献との、当業者にとって自明である組合せによって進歩性がないと考えられるもの

「&」同一パテントファミリー文献

国際調査を完了した日 １９．０２．２０１０	国際調査報告の発送日 ０２．０３．２０１０
国際調査機関の名称及びあて先 日本国特許庁（ＩＳＡ／ＪＰ） 郵便番号１００－８９１５ 東京都千代田区霞が関三丁目４番３号	特許庁審査官（権限のある職員）　５Ｃ　９０７５ 梅岡　信幸 電話番号　０３－３５８１－１１０１　内線　３５４１

PATENT COOPERATION TREATY

From the INTERNATIONAL SEARCHING AUTHORITY

To:

PCT

NOTIFICATION OF TRANSMITTAL OF THE INTERNATIONAL SEARCH REPORT AND THE WRITTEN OPINION OF THE INTERNATIONAL SEARCHING AUTHORITY, OR THE DECLARATION

(PCT Rule 44.1)

	Date of mailing *(day/month/year)* 02. 03. 2010
Applicant's or agent's file reference N00054WO	**FOR FURTHER ACTION** See paragraphs 1 and 4 below
International application No. PCT/JP2010/000247	International filing date *(day/month/year)* 19. 01. 2010
Applicant NEC Corporation	

1. [X] The applicant is hereby notified that the international search report and the written opinion of the International Searching Authority have been established and are transmitted herewith.

   Filing of amendments and statement under Article 19:
   The applicant is entitled, if he so wishes, to amend the claims of the international application (see Rule 46):

   When? The time limit for filing such amendments is normally two months from the date of transmittal of the international search report.

   Where? Directly to the International Bureau of WIPO, 34 chemin des Colombettes 1211 Geneva 20, Switzerland, Facsimile No.: +41 22 338 82 70

   For more detailed instructions, see *PCT Applicant's Guide*, International Phase, paragraphs 9.004 – 9.011.

2. [ ] The applicant is hereby notified that no international search report will be established and that the declaration under Article 17(2)(a) to that effect and the written opinion of the International Searching Authority are transmitted herewith.

3. [ ] **With regard to any protest** against payment of (an) additional fee(s) under Rule 40.2, the applicant is notified that:

   [ ] the protest together with the decision thereon has been transmitted to the International Bureau together with any request to forward the texts of both the protest and the decision thereon to the designated Offices.

   [ ] no decision has been made yet on the protest; the applicant will be notified as soon as a decision is made.

4. **Reminders**

   The applicant may submit comments on an informal basis on the written opinion of the International Searching Authority to the International Bureau. The International Bureau will send a copy of such comments to all designated Offices unless an international preliminary examination report has been or is to be established. Following the expiration of 30 months from the priority date, these comments will also be made available to the public.

   Shortly after the expiration of **18 months** from the priority date, the international application will be published by the International Bureau. If the applicant wishes to avoid or postpone publication, a notice of withdrawal of the international application, or of the priority claim, must reach the International Bureau before the completion of the technical preparations for international publication (Rules 90*bis*.1 and 90*bis*.3).

   Within **19 months** from the priority date, but only in respect of some designated Offices, a demand for international preliminary examination must be filed if the applicant wishes to postpone the entry into the national phase **until 30 months** from the priority date (in some Offices even later); otherwise, the applicant must, **within 20 months** from the priority date, perform the prescribed acts for entry into the national phase before those designated Offices.

   In respect of other designated Offices, the time limit of **30 months** (or later) will apply even if no demand is filed within 19 months.

   For details about the applicable time limits, Office by Office, see www.wipo.int/pct/en/texts/time_limits.html and the *PCT Applicant's Guide*, National Chapters.

Name and mailing address of the ISA/ Japanese Patent Office	Authorized officer
Facsimile No.	Telephone No.

特許協力条約

発信人　日本国特許庁（国際調査機関）

BABA PATENT OFFICE RECEIPT '10.3.-3 受付 馬場国際特許事務所

代理人
馬場資博
様

あて名
〒350-0046
日本国埼玉県川越市菅原町２５番地１　石井ビル２階

PCT

国際調査報告及び国際調査機関の見解書
又は国際調査報告を作成しない旨の決定
の送付の通知書
（法施行規則第41条）
〔ＰＣＴ規則44.1〕

	発送日（日.月.年）　０２．０３．２０１０
出願人又は代理人の書類記号　N00054WO	今後の手続きについては、下記１及び４を参照。
国際出願番号　ＰＣＴ／ＪＰ２０１０／０００２４７	国際出願日（日.月.年）　１９．０１．２０１０
出願人（氏名又は名称） 日本電気株式会社	

1．☑ 国際調査報告及び国際調査機関の見解書が作成されたこと、及びこの送付書とともに送付することを、出願人に通知する。
ＰＣＴ19条の規定に基づく補正書及び説明書の提出
出願人は、国際出願の請求の範囲を補正することができる（ＰＣＴ規則46参照）。
いつ　補正書の提出期間は、通常国際調査報告の送付の日から２月である。
どこへ　直接次の場所へ　The International Bureau of WIPO
34, chemin des Colombettes
1211 Geneva 20, Switzerland
Facsimile No.: +41 22 338 82 70
詳細な手続については、添付用紙の備考を参照すること。

2．☐ 国際調査報告が作成されないこと、及び法第8条第2項（ＰＣＴ17条(2)(a)）の規定による国際調査報告を作成しない旨の決定及び国際調査機関の見解書をこの送付書とともに送付することを、出願人に通知する。

3．☐ 法施行規則第44条（ＰＣＴ規則40.2）に規定する追加手数料の納付に対する異議の申立てに関して、出願人に下記の点を通知する。
☐ 異議の申立てと当該異議についての決定を、その異議の申し立てと当該異議についての決定の両方を指定官庁へ送付することを求める出願人の請求とともに、国際事務局へ送付した。
☐ 当該異議についての決定は、まだ行われていない。決定されしだい出願人に通知する。

4．今後の手続：　出願人は次の点に注意すること。
優先日から１８月経過後、国際出願は国際事務局によりすみやかに国際公開される。出願人が公開の延期を望むときは、国際出願又は優先権の主張の取下げの通知がＰＣＴ規則90の2.1及び90の2.3にそれぞれ規定されているように、国際公開の事務的な準備が完了する前に国際事務局に到達しなければならない。
いくつかの指定官庁については、出願人が国内段階の開始を優先日から３０月まで（官庁によってはさらに遅くまで）延期することを望むときは、優先日から１９月以内に、国際予備審査の請求書が提出されなければならない。そうでなければ、出願人はそれらの指定官庁に対して優先日から２０月以内に、国内段階の開始のための所定の手続を取らなければならない。
その他の指定官庁については、１９月以内に国際予備審査の請求書が提出されない場合にも、３０月の（あるいはさらに遅い）期限が適用される。
様式PCT/IB/301の付属書類を参照。個々の指定官庁で適用される期限の詳細については、ＰＣＴ出願人の手引、第Ⅱ巻、国内段階およびＷＩＰＯインターネットサイトを参照。

名称及びあて名 日本国特許庁（ＩＳＡ／ＪＰ） 郵便番号１００－８９１５ 東京都千代田区霞が関三丁目４番３号	権限のある職員　5C　9075 特許庁長官 電話番号　０３－３５８１－１１０１　内線　３５４１

様式ＰＣＴ／ＩＳＡ／２２０　（２００４年１月）

（添付用紙を参照）

注　　意

1．国際調査報告の発送日から起算する条約第19条（1）及び規則46.1に従う国際事務局への補正期間に注意してください。

2．条約22条（2）に規定する期間に注意してください。

3．法律又は契約等の制限により、国際調査報告に記載した非特許文献の写しの一部又は全てが送付されない場合があります。

4．文献の写しの請求について

国際調査報告に記載した文献の複写

特許庁にこれらの引用文献の写しを請求することもできますが、独立行政法人工業所有権情報・研修館（特許庁庁舎２階）で公報類の閲覧・複写および公報以外の文献複写等の取り扱いをしています。

〔担当及び照会先〕

〒１００－００１３　東京都千代田区霞が関３丁目４番３号（特許庁庁舎２階）

独立行政法人工業所有権情報・研修館

【公 報 類】　閲覧部　ＴＥＬ　03－3581－1101　内線3811～2

【公報以外】　資料部　ＴＥＬ　03－3581－1101　内線3831～3

注意　特許庁に対して文献の写しの請求をすることができる期間は、国際出願日から７年です。

様式ＰＣＴ／ＩＳＡ／２２０の備考

この備考は、ＰＣＴ19条の規定に基づく補正書の提出に関する基本的な指示を与えるためのものである。この備考は特許協力条約並びにこの条約に基づく規則及び実施細則の規定に基づいている。この備考とそれらの規定とが相違する場合には、後者が適用される。詳細な情報については、ＰＣＴ出願人の手引も参照すること。

ＰＣＴ19条の規定に基づく補正書の提出に関する指示

出願人は、国際調査報告及び国際調査機関の見解書を受領した後、国際出願の請求の範囲を補正する機会が一回ある。しかし、国際出願のすべての部分（請求の範囲、明細書及び図面）が、国際予備審査の手続においても補正できるもので、例えば出願人が仮保護のために補正書を公開することを希望する場合又は国際公開前に請求の範囲を補正する別の理由がある場合を除き、通常ＰＣＴ19条の規定に基づく補正書を提出する必要はないことを強調しておく。さらに、仮保護は一部の国のみで与えられるだけであることも強調しておく（ＰＣＴ出願人の手引、附録Ｂ参照）。

国際調査機関がＰＣＴ17条(2)の規定により国際調査報告を作成しない旨の決定をしたときは、ＰＣＴ19条の規定により請求の範囲を補正することができないことに、出願人は注意されたい（ＰＣＴ出願人の手引き、国際段階、第296段落参照）。

補正の対象となるもの

ＰＣＴ19条の規定により請求の範囲のみ補正することができる。
国際段階においてＰＣＴ34条の規定に基づく国際予備審査の手続きにおいて請求の範囲を（更に）補正することができる。
明細書及び図面は、ＰＣＴ34条の規定に基づく国際予備審査の手続においてのみ補正することができる。
国内段階に移行する際、ＰＣＴ28条（又はＰＣＴ41条）の規定により、国際出願のすべての部分を補正することができる。

いつ

国際調査報告の送付の日から２月又は優先日から１６月の内どちらか遅く満了するほうの期間内。しかし、その期間の満了後であっても国際公開の技術的な準備の完了前に国際事務局が補正を受領した場合には、その補正書は、期間内に受理されたものとみなすことを強調しておく（ＰＣＴ規則46.1）。

補正書を提出すべきところ

補正書は、国際事務局のみに提出でき、受理官庁又は国際調査機関には提出してはいけない（ＰＣＴ規則46.2）。
国際予備審査の請求書を提出した／する場合については、以下を参照すること。

どのように

１以上の請求の範囲の削除、１以上の新たな請求の範囲の追加、又は１以上の請求の範囲の記載の補正による。
すでに提出したすべての請求の範囲を差し替えるための完全な一式の請求の範囲を含む差し替え用紙を提出しなければならない。請求の範囲を削除する場合、その他の請求の範囲の番号を付け直す必要はない。請求の範囲の番号を付け直す場合には、アラビア数字で連続番号で付け直さなければならない（実施細則205号(a)）。
補正は国際公開の言語で行う。

補正書にどのような書類を添付しなければならないか

書簡（ＰＣＴ実施細則第205号(b)）

補正書には書簡を添付しなければならない。
書簡は国際出願及び補正された請求の範囲とともに公開されることはない。これを「ＰＣＴ19条(1)に規定する説明書」と混同してはならない（「ＰＣＴ19条(1)に規定する説明書」については、以下を参照）。
書簡は、英語又は仏語を選択しなければならない。ただし、国際出願の言語が英語の場合、書簡は英語で、仏語の場合、書簡は仏語で記載しなければならない。
書簡には、出願時の請求の範囲と補正された請求の範囲との相違について表示しなければならない。特に、国際出願に記載した各請求の範囲との関連で次の表示（２以上の請求の範囲についての同一の表示する場合は、まとめることができる。）をしなければならない。

(i) この請求の範囲は変更しない。
(ii) この請求の範囲は削除する。
(iii) この請求の範囲は追加である。
(iv) この請求の範囲は出願時の１以上の請求の範囲と差し替える。
(v) この請求の範囲は出願時の請求の範囲の分割の結果である。

次に、添付する書簡中での、補正についての説明の例を示す。

１．［請求の範囲の一部の補正によって請求の範囲の項数が４８から５１になった場合］：
“請求の範囲１－２９、３１、３２、３４、３５、３７－４８項は、同じ番号のもとに補正された請求の範囲と置き換えられた。請求の範囲３０、３３及び３６項は変更なし。新たに請求の範囲４９－５１項が追加された。”

２．［請求の範囲の全部の補正によって請求の範囲の項数が１５から１１になった場合］：
“請求の範囲１－１５項は、補正された請求の範囲１－１１項に置き換えられた。”

３．［原請求の範囲の項数が１４で、補正が一部の請求の範囲の削除と新たな請求の範囲の追加を含む場合］：
“請求の範囲１－６及び１４項は変更なし。請求の範囲７－１３は削除。新たに請求の範囲１５、１６及び１７項を追加。”又は
“請求の範囲７－１３は削除。新たに請求の範囲１５、１６及び１７項を追加。その他の全ての請求の範囲は変更なし。”

４．［各種の補正がある場合］：
“請求の範囲１－１０項は変更なし。請求の範囲１１－１３、１８及び１９項は削除。請求の範囲１４、１５及び１６項は補正された請求の範囲１４項に置き換えられた。請求の範囲１７項は補正された請求の範囲１５、１６及び１７項に分割された。新たに請求の範囲２０及び２１項が追加された。”

“ＰＣＴ19条(1)の規定に基づく説明書”（ＰＣＴ規則46.4）

補正書には、補正並びにその補正が明細書及び図面に与える影響についての説明書を提出することができる（明細書及び図面はＰＣＴ19条(1)の規定に基づいては補正できない）。

説明書は、国際出願及び補正された請求の範囲とともに公開される。

説明書は、国際公開の言語で作成しなければならない。

説明書は、簡潔でなければならず、英語の場合又は英語に翻訳した場合に５００語を越えてはならない。

説明書は、出願時の請求の範囲と補正された請求の範囲との相違を示す書簡と混同してはならない。説明書を、その書簡に代えることはできない。説明書は別紙で提出しなければならず、見出しを付すものとし、その見出しは“ＰＣＴ19条(1)の規定に基づく説明書”の語句を用いることが望ましい。

説明書には、国際調査報告又は国際調査報告に列記された文献との関連性に関して、これらを誹謗する意見を記載してはならない。国際調査報告に列記された特定の請求の範囲に関連する文献についての言及は、当該請求の範囲の補正に関してのみ行うことができる。

国際予備審査の請求書が提出されている場合

ＰＣＴ19条の規定に基づく補正書及び添付する説明書の提出の時に国際予備審査の請求書が既に提出されている場合には、出願人は、補正書（及び説明書）を国際事務局に提出すると同時にその写し及び必要な場合、その翻訳文を国際予備審査機関にも提出することが望ましい（ＰＣＴ規則55.3(a)、62.2の第１文を参照）。詳細は国際予備審査請求書（ＰＣＴ／ＩＰＥＡ／４０１）の注意書参照。

国際予備審査の請求がされた場合は、国際予備審査機関が国際調査機関としては行動しておらず、ＰＣＴ規則66.1の2(b)の規定による国際事務局への通告がなされているという特定の場合を除いて、国際調査機関の見解書は国際予備審査機関の見解書とみなされる。国際予備審査の請求がされると、様式ＰＣＴ／ＩＳＡ２２０の送付日から３月又は優先日から２２月のうちいずれか遅く満了する期限が経過するまでに、出願人は国際予備審査機関に、適当な場合は補正書とともに、答弁書を提出することができる（ＰＣＴ規則43の2.1(c)）。

国内段階に移行するための国際出願の翻訳に関して

国内段階に移行する際、ＰＣＴ19条の規定に基づいて補正された請求の範囲の翻訳を出願時の請求の範囲の翻訳の代わりに又は追加して、指定官庁／選択官庁に提出しなければならないこともあるので、出願人は注意されたい。

指定官庁／選択官庁の詳細な要求については、ＰＣＴ出願人の手引きの国内段階を参照。

PATENT COOPERATION TREATY

From the
INTERNATIONAL SEARCHING AUTHORITY

To:

PCT

WRITTEN OPINION OF THE
INTERNATIONAL SEARCHING AUTHORITY

(PCT Rule 43*bis*.1)

Date of mailing *(day/month/year)*	02. 03. 2010
Applicant's or agent's file reference N00054WO	**FOR FURTHER ACTION** See paragraph 2 below

International application No.	International filing date *(day/month/year)*	Priority date *(day/month/year)*
PCT/JP2010/000247	19. 01. 2010	29. 01. 2009

International Patent Classification (IPC) or both national classification and IPC
Int.Cl. H04N5/76(2006.01) i, G06F17/30(2006.01) i, H04N5/91(2006.01) i

Applicant
NEC Corporation

1. This opinion contains indications relating to the following items:

- [X] Box No. I Basis of the opinion
- [ ] Box No. II Priority
- [ ] Box No. III Non-establishment of opinion with regard to novelty, inventive step and industrial applicability
- [ ] Box No. IV Lack of unity of invention
- [X] Box No. V Reasoned statement under Rule 43*bis*.1(a)(i) with regard to novelty, inventive step and industrial applicability; citations and explanations supporting such statement
- [ ] Box No. VI Certain documents cited
- [ ] Box No. VII Certain defects in the international application
- [ ] Box No. VIII Certain observations on the international application

2. **FURTHER ACTION**

If a demand for international preliminary examination is made, this opinion will be considered to be a written opinion of the International Preliminary Examining Authority ("IPEA") except that this does not apply where the applicant chooses an Authority other than this one to be the IPEA and the chosen IPEA has notified the International Bureau under Rule 66.1*bis*(b) that written opinions of this International Searching Authority will not be so considered.

If this opinion is, as provided above, considered to be a written opinion of the IPEA, the applicant is invited to submit to the IPEA a written reply together, where appropriate, with amendments, before the expiration of 3 months from the date of mailing of Form PCT/ISA/220 or before the expiration of 22 months from the priority date, whichever expires later.

For further options, see Form PCT/ISA/220.

3. For further details, see notes to Form PCT/ISA/220.

Name and mailing address of the ISA/	Date of completion of this opinion	Authorized officer
Japanese Patent Office Facsimile No.	19. 02. 2010	Telephone No.

WRITTEN OPINION OF THE INTERNATIONAL SEARCHING AUTHORITY

International application No.
PCT/JP2010/000247

Box No. I Basis of this opinion

1. With regard to the **language**, this opinion has been established on the basis of:

   [X] the international application in the language in which it was filed.

   [ ] a translation of the international application into _____ which is the language of a translation furnished for the purposes of international search (Rules 12.3(a) and 23.1(b)).

2. [ ] This opinion has been established taking into account the **rectification of an obvious mistake** authorized by or notified to this Authority under Rule 91 (Rule 43*bis*.1(a))

3. With regard to any **nucleotide and/or amino acid sequence** disclosed in the international application, this opinion has been established on the basis of a sequence listing filed or furnished:

   a. (means)

   [ ] on paper

   [ ] in electronic form

   b. (time)

   [ ] in the international application as filed

   [ ] together with the international application in electronic form

   [ ] subsequently to this Authority for the purposes of search

4. [ ] In addition, in the case that more than one version or copy of a sequence listing has been filed or furnished, the required statements that the information in the subsequent or additional copies is identical to that in the application as filed or does not go beyond the application as filed, as appropriate, were furnished.

5. Additional comments:

WRITTEN OPINION OF THE INTERNATIONAL SEARCHING AUTHORITY

International application No.
PCT/JP2010/000247

Box No. II Priority

1. ☐ The validity of the priority claim has not been considered because the International Searching Authority does not have in its possession a copy of the earlier application whose priority has been claimed or, where required, a translation of that earlier application. This opinion has nevertheless been established on the assumption that the relevant date (Rules 43*bis*.1 and 64.1) is the claimed priority date.

2. ☐ This opinion has been established as if no priority had been claimed due to the fact that the priority claim has been found invalid (Rules 43*bis*.1 and 64.1). Thus for the purposes of this opinion, the international filing date indicated above is considered to be the relevant date.

3. Additional observations, if necessary:

WRITTEN OPINION OF THE INTERNATIONAL SEARCHING AUTHORITY

International application No.
PCT/JP2010/000247

Box No. III Non-establishment of opinion with regard to novelty, inventive step and industrial applicability

The questions whether the claimed invention appears to be novel, to involve an inventive step (to be non obvious), or to be industrially applicable have not been examined in respect of:

☐ the entire international application.

☐ claims Nos. _____

because:

☐ the said international application, or the said claims Nos. _____ relate to the following subject matter which does not require an international search *(specify)*:

☐ the description, claims or drawings *(indicate particular elements below)* or said claims Nos. _____ are so unclear that no meaningful opinion could be formed *(specify)*:

☐ the claims, or said claims Nos. _____ are so inadequately supported by the description that no meaningful opinion could be formed *(specify)*:

☐ no international search report has been established for said claims Nos. _____

☐ a meaningful opinion could not be formed without the sequence listing; the applicant did not, within the prescribed time limit:

- ☐ furnish a sequence listing on paper complying with the standard provided for in Annex C of the Administrative Instructions, and such listing was not available to the International Searching Authority in a form and manner acceptable to it.
- ☐ furnish a sequence listing in electronic form complying with the standard provided for in Annex C of the Administrative Instructions, and such listing was not available to the International Searching Authority in a form and manner acceptable to it.
- ☐ pay the required late furnishing fee for the furnishing of a sequence listing in response to an invitation under Rule 13*ter*.1(a) or (b).

☐ See Supplemental Box for further details.

WRITTEN OPINION OF THE INTERNATIONAL SEARCHING AUTHORITY

International application No.
PCT/JP2010/000247

Box No. IV Lack of unity of invention

1. ☐ In response to the invitation (Form PCT/ISA/206) to pay additional fees the applicant has, within the applicable time limit:

   ☐ paid additional fees.

   ☐ paid additional fees under protest and, where applicable, the protest fee.

   ☐ paid additional fees under protest but the applicable protest fee was not paid.

   ☐ not paid additional fees.

2. ☐ This Authority found that the requirement of unity of invention is not complied with and chose not to invite the applicant to pay additional fees.

3. This Authority considers that the requirement of unity of invention in accordance with Rule 13.1, 13.2 and 13.3 is

   ☐ complied with.

   ☐ not complied with for the following reasons:

4. Consequently, this opinion has been established in respect of the following parts of the international application:

   ☐ all parts.

   ☐ the parts relating to claims Nos. _____

WRITTEN OPINION OF THE INTERNATIONAL SEARCHING AUTHORITY

International application No.
PCT/JP2010/000247

Box No. V **Reasoned statement under Rule 43*bis*.1(a)(i) with regard to novelty, inventive step and industrial applicability; citations and explanations supporting such statement**

1. Statement

Novelty (N)	Claims	3, 7-9, 12, 16-18	YES
	Claims	1, 2, 4-6, 10, 11, 13-15, 19	NO
Inventive step (IS)	Claims	3, 7, 12, 16	YES
	Claims	1, 2, 4-6, 8-11, 13-15, 17-19	NO
Industrial applicability (IA)	Claims	1-19	YES
	Claims		NO

2. Citations and explanations:

D1: JP2007-336106A (Osaka University) 27 December, 2007
paragraphs [0099] to [0103]

D2: JP2002-44610A (Nippon Telegraph And Telephone Corp.)
08 February, 2002 paragraph [0014]

Present invention disclosed in Claims 1, 2, 4-6, 10, 11, 13 and 19 are considered as not having a novelty and inventive step by Document 1 cited in the International Search Report. Each of feature vectors indicated by multiple dimensional vectors is considered as "feature of different dimensions" because the each feature vector indicated by multiple dimensional vectors is different kind of vector.
Therefore, it is not possible to discriminate wording "feature vector indicated by multiple dimensional vectors" from "feature of different dimensions" at least.

Present invention disclosed in Claims 8, 9, 17 and 18 are considered as not having an inventive step by Document 1 and Document 2 cited in the International Search Report. Document 2 discloses the art having features that matching between the time segment feature vector for each time segment of the first feature vector series (histogram) and the time segment feature vector for each time segment of the second feature vector series (histogram), and determining whether or not the time segment representative feature vectors are similar.
There is no particular difficulty to apply the technical idea disclosed in Document 2 to the invention disclosed in Document 1 and to reach the present invention disclosed in Claims 8, 9, 17 and 18 of this application.

The present invention disclosed in Claims 3, 7, 12 and 16 of this application is not described in any of the cited references in the International Search Report as well as it is not obvious to a person having ordinary skill in the art.

WRITTEN OPINION OF THE INTERNATIONAL SEARCHING AUTHORITY

International application No.
PCT/JP2010/000247

Box No. VI Certain documents cited

1. Certain published documents (Rules 43*bis*.1 and 70.10)

Application No. Patent No.	Publication date *(day/month/year)*	Filing date *(day/month/year)*	Priority date (valid claim) *(day/month/year)*

2. Non-written disclosures (Rules 43*bis*.1 and 70.9)

Kind of non-written disclosure	Date of non-written disclosure *(day/month/year)*	Date of written disclosure referring to non-written disclosure *(day/month/year)*

WRITTEN OPINION OF THE INTERNATIONAL SEARCHING AUTHORITY

International application No.
PCT/JP2010/000247

Box No. VII Certain defects in the international application

The following defects in the form or contents of the international application have been noted:

WRITTEN OPINION OF THE INTERNATIONAL SEARCHING AUTHORITY

International application No.
PCT/JP2010/000247

Box No. VIII Certain observations on the international application

The following observations on the clarity of the claims, description, and drawings or on the question whether the claims are fully supported by the description, are made:

WRITTEN OPINION OF THE INTERNATIONAL SEARCHING AUTHORITY

International application No.
PCT/JP2010/000247

Supplemental Box

In case **the space in any of the preceding boxes is not sufficient.**
Continuation of:

特許協力条約

発信人　日本国特許庁（国際調査機関）

BABA PATENT OFFICE RECEIPT '10.3.-3 受付 馬場国際特許事務所

代理人
馬場資博
様

あて名
〒350-0046
日本国埼玉県川越市菅原町２５番地１　石井ビル２階

PCT
国際調査機関の見解書
(法施行規則第40条の2)
〔PCT規則43の2.1〕

発送日 (日.月.年)	０２．０３．２０１０
出願人又は代理人の書類記号　N00054WO	今後の手続きについては、下記２を参照すること。

国際出願番号	国際出願日	優先日
PCT／JP2010／000247	(日.月.年)　１９．０１．２０１０	(日.月.年)　２９．０１．２００９

国際特許分類（ＩＰＣ）Int.Cl. H04N5/76(2006.01)i, G06F17/30(2006.01)i, H04N5/91(2006.01)i

出願人（氏名又は名称）
日本電気株式会社

１．この見解書は次の内容を含む。
- ☑ 第Ｉ欄　見解の基礎
- ☐ 第II欄　優先権
- ☐ 第III欄　新規性、進歩性又は産業上の利用可能性についての見解の不作成
- ☐ 第IV欄　発明の単一性の欠如
- ☑ 第Ｖ欄　ＰＣＴ規則43の2.1(a)(i)に規定する新規性、進歩性又は産業上の利用可能性についての見解、それを裏付けるための文献及び説明
- ☐ 第VI欄　ある種の引用文献
- ☐ 第VII欄　国際出願の不備
- ☐ 第VIII欄　国際出願に対する意見

２．今後の手続き
国際予備審査の請求がされた場合は、出願人がこの国際調査機関とは異なる国際予備審査機関を選択し、かつ、その国際予備審査機関がＰＣＴ規則66.1の2(b)の規定に基づいて国際調査機関の見解書を国際予備審査機関の見解書とみなさない旨を国際事務局に通知していた場合を除いて、この見解書は国際予備審査機関の最初の見解書とみなされる。

この見解書が上記のように国際予備審査機関の見解書とみなされる場合、様式ＰＣＴ／ＩＳＡ／２２０を送付した日から３月又は優先日から２２月のうちいずれか遅く満了する期限が経過するまでに、出願人は国際予備審査機関に、適当な場合は補正書とともに、答弁書を提出することができる。

さらなる選択肢は、様式ＰＣＴ／ＩＳＡ／２２０を参照すること。

３．さらなる詳細は、様式ＰＣＴ／ＩＳＡ／２２０の備考を参照すること。

見解書を作成した日
１９．０２．２０１０

名称及びあて先 日本国特許庁（ＩＳＡ／ＪＰ） 郵便番号１００－８９１５ 東京都千代田区霞が関三丁目４番３号	特許庁審査官（権限のある職員）　5C　9075 梅岡　信幸 電話番号　０３－３５８１－１１０１　内線　３５４１

国際調査機関の見解書

国際出願番号　ＰＣＴ／ＪＰ２０１０／０００２４７

第Ｉ欄　見解の基礎

１．言語に関し、この見解書は以下のものに基づき作成した。

☑ 出願時の言語による国際出願

☐ 出願時の言語から国際調査のための言語である ＿＿＿＿＿＿ 語に翻訳された、この国際出願の翻訳文（ＰＣＴ規則12.3(a)及び23.1(b)）

２．☐ この見解書は、ＰＣＴ規則 91 の規定により国際調査機関が認めた又は国際調査機関に通知された明らかな誤りの訂正を考慮して作成した（ＰＣＴ規則 43 の 2.1(b)）。

３．この国際出願で開示されたヌクレオチド又はアミノ酸配列に関して、以下に基づき見解書を作成した。

ａ．タイプ　☐ 配列表

☐ 配列表に関連するテーブル

ｂ．フォーマット　☐ 紙形式

☐ 電子形式

ｃ．提出時期　☐ 出願時の国際出願に含まれていたもの

☐ この国際出願と共に電子形式により提出されたもの

☐ 出願後に、調査のために、この国際調査機関に提出されたもの

４．☐ さらに、配列表又は配列表に関連するテーブルを提出した場合に、出願後に提出した配列若しくは追加して提出した配列が出願時に提出した配列と同一である旨、又は、出願時の開示を超える事項を含まない旨の陳述書の提出があった。

５．補足意見：

国際調査機関の見解書

国際出願番号 PCT／JP2010／000247

第V欄 新規性、進歩性又は産業上の利用可能性についてのPCT規則43の2.1(a)(i)に定める見解、それを裏付ける文献及び説明

1. 見解

新規性（N）	請求項	3, 7-9, 12, 16-18	有
	請求項	1, 2, 4-6, 10, 11, 13-15, 19	無
進歩性（IS）	請求項	3, 7, 12, 16	有
	請求項	1, 2, 4-6, 8-11, 13-15, 17-19	無
産業上の利用可能性（IA）	請求項	1-19	有
	請求項		無

2. 文献及び説明

文献1:JP 2007-336106 A（国立大学法人大阪大学）2007.12.27, 段落99-103
文献2:JP 2002-44610 A（日本電信電話株式会社）2002.02.08, 段落14

請求の範囲1, 2, 4-6, 10, 11, 13, 19に係る発明は、国際調査報告で引用された文献1により新規性・進歩性を有しない。多次元のベクトルで表した特徴量ベクトルはそれぞれ異なる種類のものであるから、「異なる次元の特徴量」といえる。よって、両者は少なくとも文言上区別できない。

請求の範囲8, 9, 17, 18に係る発明は、文献1と国際調査報告で引用された文献2により進歩性を有しない。文献2には、第1の特徴ベクトル系列の時間区間ごとの特徴量（ヒストグラム）と、第2の特徴ベクトル系列の時間区間ごとの特徴量（ヒストグラム）とを照合して、両区間が類似するか否かを判定することが記載されており、文献1記載の発明に文献2に記載の技術思想を適用し、請求の範囲8, 9, 17, 18に係る発明とすることに格別の困難性はない。

請求の範囲3, 7, 12, 16に係る発明は、国際調査報告で引用されたいずれの文献にも記載されておらず、当業者にとって自明なものでもない。

AMENDMENT

To: Examiner of the Patent Office

1 Identification of the International Application

PCT/JP2010/000247

2 Applicant

Name: NEC Corporation

Address: 7-1, Shiba 5-chome, Minato-ku, Tokyo 108-8001 Japan

Country of nationality: JAPAN

Country of residence: JAPAN

3 Agent

Name: BABA Motohiro

Address: 2nd Floor, Ishii Bldg., 25-1, Sugawara-machi, Kawagoe-shi, Saitama 350-0046 Japan

4 Item to be Amended: Claims

5 Subject Matter of Amendment

(1) The claim 1 on page 20 is amended as per the attached sheet(s).

(2) The claim 7 on page 21 is canceled.

(3) The claim 8 on page 21 is amended as per the attached sheet(s).

(4) The claim 10 on page 21 to 22 is amended as per the attached sheet(s).

(5) The claim 16 on page 23 is canceled.

(6) The claim 17 on page 23 is amended as per the attached sheet(s).

(7) The claim 19 on page 23 to 24 is amended as per the attached sheet(s).

6 List of Attached Documents

(1) Replacement sheets; page 20 to 23

CLAIMS

1. (Amended) A time segment representative feature vector generation device, comprising:

intra-time segment feature vector group selection means for selecting, for each time segment and from a feature vector series for respective frames, feature vectors of a plurality of frames included in a time segment; and

dimension selection means for sequentially selecting, for each time segment and from the selected feature vectors of different frames in the time segment, features of different dimensions of the feature vectors in accordance with predetermined degrees of importance of respective dimensions of the feature vectors starting from a dimension having a highest degree of importance, and generating a time segment representative feature vector which is a feature vector representing the time segment.

2. The time segment representative feature vector generation device, according to Claim 1, wherein the feature vector series is a series of feature vectors for respective frames of moving image data.

3. The time segment representative feature vector generation device, according to Claim 2, wherein the feature vector is calculated based on a difference value between features of two sub-regions forming a pair among a plurality of pairs of sub-regions in a frame of a moving image.

4. The time segment representative feature vector generation device, according to any of Claims 1 to 3, wherein the dimension selection means selects a feature of at least one dimension from the selected feature vectors of all frames in the time segment.

5. The time segment representative feature vector generation device, according to any of Claims 1 to 4, wherein

based on information indicating a frame rate of the feature vector series and information indicating a reference frame rate for generating a time segment representative feature vector, the intra-time segment feature vector group selection means specifies a sample position in the reference frame rate from the feature vector series, and selects feature vectors of a plurality of frames at the specified sample position.

6. The time segment representative feature vector generation device, according to Claim 5, wherein

the intra-time segment feature vector group selection means specifies the sample position based on a sampling interval defined by a ratio between the frame rate of the feature vector series and the reference frame rate.

7. (Canceled)

8. (Amended) A matching device, comprising

a first matching means for performing matching between a time segment representative feature vector for each time segment of a first feature vector series and a time segment representative feature vector for each time segment of a second feature vector series, generated by the time segment representative feature vector generation device according to any of Claims 1 to 6, and determining whether or not both time segment representative feature vectors are similar.

9. The matching device, according to Claim 8, further comprising

a second matching means for performing matching, with respect to a pair of time segment representative feature vectors determined to be similar by the first matching means, between feature vectors of frames included in a corresponding time segment in frame units.

10. (Amended) A time segment representative feature vector generation method, comprising:

selecting, for each time segment and from a feature vector series for respective frames, feature vectors of a plurality of frames included in a time segment; and

selecting, for each time segment and from the selected feature vectors of different frames in the time segment, features of different dimensions of the feature vectors in accordance with predetermined degrees of importance of respective dimensions of the feature vectors starting from a dimension having a highest degree of importance, and generating a time segment representative feature vector which is a feature vector representing the time segment.

11. The time segment representative feature vector generation method, according to Claim 10, wherein the feature vector series is a series of feature vectors for respective frames of moving image data.

12. The time segment representative feature vector generation method, according to Claim 11, wherein the feature vector is calculated based on a difference value between features of two sub-regions forming a pair among a plurality of pairs of sub-regions in a frame of a moving image.

13. The time segment representative feature vector generation method, according to any of Claims 10 to 12, wherein the generating the time segment representative feature vector includes selecting a feature of at least one dimension from the selected feature vectors of all frames in the time segment.

14. The time segment representative feature vector generation method, according to any of Claims 10 to 13, wherein

the selecting the feature vectors of the plurality of frames includes, based on information indicating a frame rate of the feature vector series and information indicating a reference frame rate for generating a time segment representative feature vector, specifying a sample position in the reference frame rate from the feature vector series, and selecting feature vectors of a plurality of frames at the specified sample position.

15. The time segment representative feature vector generation method, according to Claim 14, wherein

the selecting the feature vectors of the plurality of frames includes specifying the sample position based on a sampling interval defined by a ratio between the frame rate of the feature vector series and the reference frame rate.

16. (Canceled)

17. (Amended) A matching method, comprising

performing matching between a time segment representative feature vector for each time segment of a first feature vector series and a time segment representative feature vector for each time segment of a second feature vector series, generated by the time segment representative feature vector generation method according to any of Claims 10 to 15, and determining whether or not both time segment representative feature vectors are similar.

18. The matching method, according to Claim 17, further comprising

with respect to a pair of the time segment representative feature vectors determined to be similar, performing matching between feature vectors of frames included in a corresponding time segment in frame units.

19. (Amended) A program for causing a computer to function as:

intra-time segment feature vector group selection means for selecting, for each time

segment and from a feature vector series for respective frames, feature vectors of a plurality of frames included in a time segment; and

dimension selection means for sequentially selecting, for each time segment and from the selected feature vectors of different frames in the time segment, features of different dimensions of the feature vectors in accordance with predetermined degrees of importance of respective dimensions of the feature vectors starting from a dimension having a highest degree of importance, and generating a time segment representative feature vector which is a feature vector representing the time segment.

手 続 補 正 書

（法第１１条の規定による補正）

特許庁審査官　殿

１　国際出願の表示　ＰＣＴ／ＪＰ２０１０／０００２４７

２　出 願 人

名　称　　日本電気株式会社

NEC Corporation

あて名　　〒108-8001　日本国東京都港区芝五丁目７番１号

7-1, Shiba 5-chome, Minato-ku, Tokyo 108-8001 Japan

国　籍　　日本国 JAPAN

住　所　　日本国 JAPAN

３　代 理 人

氏　名　　弁理士　馬　場　　資　博

BABA　Motohiro

あて名　　〒350-0046　日本国埼玉県川越市菅原町２５番地１　石井ビル２階

2nd Floor, Ishii Bldg., 25-1, Sugawara-machi, Kawagoe-shi,

Saitama 350-0046 Japan

４　補正の対象

請求の範囲

５　補正の内容

（１）請求の範囲第２０頁［請求項１］を別紙の通り補正する。

（２）請求の範囲第２１頁［請求項７］を削除する。

（３）請求の範囲第２１頁［請求項８］を別紙の通り補正する。

（４）請求の範囲第２１頁～第２２頁［請求項１０］を別紙の通り補正する。

（５）請求の範囲第２３頁［請求項１６］を削除する。

（６）請求の範囲第２３頁［請求項１７］を別紙の通り補正する。

（７）請求の範囲第２３頁～第２４頁［請求項１９］を別紙の通り補正する。

６　添付書類の目録

（１）請求の範囲第２０頁～第２３頁

請求の範囲

［請求項１］　（補正後）フレームごとの特徴ベクトルの系列から、時間区間ごとに、時間区間に含まれる複数のフレームの特徴ベクトルを選定する時間区間内特徴ベクトル群選定手段と、

時間区間ごとに、あらかじめ定められた特徴ベクトルの次元ごとの重要度に従って、重要度の高い次元から順に、前記選定された時間区間内の異なるフレームの特徴ベクトルから、特徴ベクトルの異なる次元の特徴量を選択し、時間区間を代表する特徴ベクトルである時間区間代表特徴ベクトルとして生成する次元選択手段と、

を備えることを特徴とする時間区間代表特徴ベクトル生成装置。

［請求項２］　前記特徴ベクトル系列は、動画像データのフレームごとの特徴ベクトルの系列である

ことを特徴とする請求項１に記載の時間区間代表特徴ベクトル生成装置。

［請求項３］　前記特徴ベクトルは、動画像のフレームにおける、複数の部分領域対の、対をなす２つの部分領域の特徴量の差分値に基づいて算出される

ことを特徴とする請求項２に記載の時間区間代表特徴ベクトル生成装置。

［請求項４］　前記次元選択手段は、前記選定された時間区間内の全てのフレームの特徴ベクトルから、少なくとも１つの次元の特徴量を選択する

ことを特徴とする請求項１乃至３の何れか１項に記載の時間区間代表特徴ベクトル生成装置。

［請求項５］　前記時間区間内特徴ベクトル群選定手段は、

前記特徴ベクトル系列のフレームレートを示す情報と、時間区間代表特徴ベクトルを生成する基準のフレームレートを示す情報とに基づいて、前記特徴ベクトル系列から、前記基準フレームレートにおけるサンプル位置を特定し、特定されたサンプル位置の複数のフレームの

特徴ベクトルを選定する、

ことを特徴とする請求項１乃至４の何れか１項に記載の時間区間代表特徴ベクトル生成装置。

［請求項６］　前記時間区間内特徴ベクトル群選定手段は、

前記特徴ベクトル系列のフレームレートと前記基準フレームレートとの比によって定まるサンプリング間隔に基づいてサンプル位置を特定する

ことを特徴とする請求項５に記載の時間区間代表特徴ベクトル生成装置。

［請求項７］　（削除）

［請求項８］　（補正後）請求項１乃至６の何れか１項に記載の時間区間代表特徴ベクトル生成装置によって生成された、第１の特徴ベクトル系列の時間区間ごとの時間区間代表特徴ベクトルと、第２の特徴ベクトル系列の時間区間ごとの時間区間代表特徴ベクトルとを照合して、時間区間代表特徴ベクトルどうしが類似するか否かを判定する第１の照合手段、

を備える照合装置。

［請求項９］　前記第１の照合手段によって類似すると判定した時間区間代表特徴ベクトルの対に対して、それぞれに対応する時間区間に含まれるフレームの特徴ベクトルを、フレーム単位で照合する第２の照合手段、

を備えることを特徴とする請求項８に記載の照合装置。

［請求項１０］　（補正後）フレームごとの特徴ベクトルの系列から、時間区間ごとに、時間区間に含まれる複数のフレームの特徴ベクトルを選定し、

時間区間ごとに、あらかじめ定められた特徴ベクトルの次元ごとの重要度に従って、重要度の高い次元から順に、前記選定された時間区間内の異なるフレームの特徴ベクトルから、特徴ベクトルの異なる次元の特徴量を選択し、時間区間を代表する特徴ベクトルである時間区間代表特徴ベクトルとして生成する

ことを特徴とする時間区間代表特徴ベクトル生成方法。

［請求項１１］　前記特徴ベクトル系列は、動画像データのフレームごとの特徴ベクトルの系列である
ことを特徴とする請求項１０に記載の時間区間代表特徴ベクトル生成方法。

［請求項１２］　前記特徴ベクトルは、動画像のフレームにおける、複数の部分領域対の、対をなす２つの部分領域の特徴量の差分値に基づいて算出される
ことを特徴とする請求項１１に記載の時間区間代表特徴ベクトル生成方法。

［請求項１３］　前記時間区間代表特徴ベクトルの生成では、前記選定された時間区間内の全てのフレームの特徴ベクトルから、少なくとも１つの次元の特徴量を選択する
ことを特徴とする請求項１０乃至１２の何れか１項に記載の時間区間代表特徴ベクトル生成方法。

［請求項１４］　前記複数のフレームの特徴ベクトルの選定では、
前記特徴ベクトル系列のフレームレートを示す情報と、時間区間代表特徴ベクトルを生成する基準のフレームレートを示す情報とに基づいて、前記特徴ベクトル系列から、前記基準フレームレートにおけるサンプル位置を特定し、特定されたサンプル位置の複数のフレームの特徴ベクトルを選定する
ことを特徴とする請求項１０乃至１３の何れか１項に記載の時間区間代表特徴ベクトル生成方法。

［請求項１５］　前記複数のフレームの特徴ベクトルの選定では、
前記特徴ベクトル系列のフレームレートと前記基準フレームレートとの比によって定まるサンプリング間隔に基づいてサンプル位置を特定する
ことを特徴とする請求項１４に記載の時間区間代表特徴ベクトル生成方法。

［請求項１６］　（削除）

［請求項１７］　（補正後）請求項１０乃至１５の何れか１項に記載の時間区間代表特徴ベクトル生成方法によって生成された、第１の特徴ベクトル系列の時間区間ごとの時間区間代表特徴ベクトルと、第２の特徴ベクトル系列の時間区間ごとの時間区間代表特徴ベクトルとを照合して、時間区間代表特徴ベクトルどうしが類似するか否かを判定する
ことを特徴とする照合方法。

［請求項１８］　前記類似すると判定した時間区間代表特徴ベクトルの対に対して、それぞれに対応する時間区間に含まれるフレームの特徴ベクトルを、フレーム単位で照合する
ことを特徴とする請求項１７に記載の照合方法。

［請求項１９］　（補正後）コンピュータを、

フレームごとの特徴ベクトルの系列から、時間区間ごとに、時間区間に含まれる複数のフレームの特徴ベクトルを選定する時間区間内特徴ベクトル群選定手段と、

時間区間ごとに、あらかじめ定められた特徴ベクトルの次元ごとの重要度に従って、重要度の高い次元から順に、前記選定された時間区間内の異なるフレームの特徴ベクトルから、特徴ベクトルの異なる次元の特徴量を選択し、時間区間を代表する特徴ベクトルである時間区間代表特徴ベクトルとして生成する次元選択手段と
して機能させるためのプログラム。

UNITED STATES PATENT AND TRADEMARK OFFICE

UNITED STATES DEPARTMENT OF COMMERCE
United States Patent and Trademark Office
Address: COMMISSIONER FOR PATENTS
P.O. Box 1450
Alexandria, Virginia 22313-1450
www.uspto.gov

APPLICATION NO.	FILING DATE	FIRST NAMED INVENTOR	ATTORNEY DOCKET NO.	CONFIRMATION NO.
13/143,673	07/07/2011	Kota Iwamoto	Q125262	7810

23373 7590 09/14/2011
SUGHRUE MION, PLLC
2100 PENNSYLVANIA AVENUE, N.W.
SUITE 800
WASHINGTON, DC 20037

EXAMINER

ART UNIT	PAPER NUMBER
2624	

NOTIFICATION DATE	DELIVERY MODE
09/14/2011	ELECTRONIC

Please find below and/or attached an Office communication concerning this application or proceeding.

The time period for reply, if any, is set in the attached communication.

Notice of the Office communication was sent electronically on above-indicated "Notification Date" to the following e-mail address(es):

sughrue@sughrue.com
PPROCESSING@SUGHRUE.COM
USPTO@SUGHRUE.COM

UNITED STATES PATENT AND TRADEMARK OFFICE

Commissioner for Patents
United States Patent and Trademark Office
P.O. Box 1450
Alexandria, VA 22313-1450
www.uspto.gov

SUGHRUE MION, PLLC
2100 PENNSYLVANIA AVENUE, N.W.
SUITE 800
WASHINGTON DC 20037

In re Application of	
IWAMOTO et al.	**: DECISION ON REQUEST TO**
Application No.: 13/143,673	**: PARTICIPATE IN THE PATENT**
Filed: 07 July 2011	**: PROSECUTION HIGHWAY**
Attorney Docket No.: Q125262	**: PROGRAM AND PETITION**
For: TIME SEGMENT	**: TO MAKE SPECIAL UNDER**
REPRESENTATIVE FEATURE	**: 37 CFR 1.102(a)**
VECTOR GENERATION DEVICE	

This is a decision on the request to participate in the PCT Patent Prosecution Highway (PCT-PPH) pilot program and the petition under 37 CFR 1.102(a), filed on 09 August 2011, to make the above-identified application special.

The request and petition are **GRANTED**.

Discussion

A grantable request to participate in the PCT-PPH pilot program and petition to make special require:

(1) The U.S. application must have an eligible relationship to one or more PCT applications where the ISA or IPEA are the JPO, EPO, KIPO, NPI, NBPR, or USPTO;

(2) At least one claim in the PCT application has novelty, inventive step, and industrial applicability and must be free of any observations in Box VIII in the latest work product in the international stage or applicant must identify and explain why the claim(s) is/are not subject to the observation in Box VIII;

(3) Applicant must submit a copy of the claim(s) from the PCT application(s) that have novelty, inventive step, and industrial applicability along with an English translation thereof and a statement that the English translation is accurate, if the claims are not in the English language;

(4) All the claims in the U.S. application must sufficiently correspond or be amended to sufficiently correspond to the claim(s) that have novelty, inventive step, and industrial applicability in the PCT application(s);

(5) Examination of the U.S. application has not begun;

(6) Applicant must submit a copy of the latest international work product from the PCT application indicating that the claim(s) have novelty, inventive step, and industrial applicability along with an English translation thereof and a statement that the English translation is accurate if the latest international work product is not in the English language;

(7) Applicant must submit an IDS listing the documents cited by the PCT examiner in the international work product along with copies of documents except U.S. patents or U.S. patent application publications.

The request to participate in the PCT-PPH pilot program and petition comply with the above requirements. Accordingly, the above-identified application has been accorded "special" status.

Telephone inquiries concerning this decision should be directed to Lee W. Young at 571-272-4549.

All other inquiries concerning the examination or status of the application is accessible in the PAIR system at http://www.uspto.gov/ebc.index.html.

This application will be forwarded to the examiner for action on the merits commensurate with this decision once this application's formality reviews have been completed.

Lee W. Young
TQAS Technology Center 2600

PTO/SB/20PCT-EP (05-10)
Approved for use through 01/31/2012. OMB 0651-0058
U.S. Patent and Trademark Office; U. S. DEPARTMENT OF COMMERCE
Under the Paperwork Reduction Act of 1995, no persons are required to respond to a collection of information unless it displays a valid OMB control number.

REQUEST FOR PARTICIPATION IN THE PATENT COOPERATION TREATY - PATENT PROSECUTION HIGHWAY (PCT-PPH) PILOT PROGRAM BETWEEN THE EUROPEAN PATENT OFFICE (EPO) AND THE USPTO

Application No:	13143679	Filing date:	July 7, 2011
First Named Inventor:	Robert Koeppe		
Title of the Invention:	DETECTOR SURFACE		

THIS REQUEST FOR PARTICIPATION IN THE PCT-PPH PILOT PROGRAM ALONG WITH THE REQUIRED DOCUMENTS MUST BE SUBMITTED VIA EFS-WEB. INFORMATION REGARDING EFS-WEB IS AVAILABLE AT HTTP://WWW.USPTO.GOV/EBC/EFS_HELP.HTML

APPLICANT HEREBY REQUESTS PARTICIPATION IN THE PCT-PPH PROGRAM AND PETITIONS TO MAKE THE ABOVE-IDENTIFIED APPLICATION SPECIAL UNDER THE PCT-PPH PROGRAM.

The above-identified application is (1) a national stage entry of the corresponding PCT application, or (2) a national stage entry of another PCT application which claims priority to the corresponding PCT application, or (3) a national application that claims domestic/ foreign priority to the corresponding PCT application, or (4) a national application which forms the basis for the priority claim in the corresponding PCT application, or (5) a continuing application of a U.S. application that satisfies one of (1) to (4) above, or (6) a U.S. application that claims domestic benefit to a U.S. provisional application which forms the basis for the priority claim in the corresponding PCT application.

The corresponding PCT application number(s) is/are: PCT/AT2010/00001

The international filing date of the corresponding PCT application(s) is/are: January 4, 2010

I. List of Required Documents:

a. **A copy of the latest international work product (WO/ISA, WO/IPEA, or IPER) in the above–identified corresponding PCT application(s)**

- [x] Is attached
- [ ] Is not attached because the document is already in the U.S. application.

b. **A copy of all claims which were indicated as having novelty, inventive step and industrial applicability in the above-identified corresponding PCT application(s).**

- [x] Is attached.
- [ ] Is not attached because the document is already in the U.S. application.

c. **English translations of the documents in a. and b. above are attached (if the documents are not in the English language). A statement that the English translation is accurate is attached for the document in b. above.**

This collection of information is required by 35 U.S.C. 119, 37 CFR 1.55, and 37 CFR 1.102(d). The information is required to obtain or retain a benefit by the public, which is to file (and by the USPTO to process) an application. Confidentiality is governed by 35 U.S.C. 122 and 37 CFR 1.11 and 1.14. This collection is estimated to take 2 hours to complete, including gathering, preparing, and submitting the completed application form to the USPTO. Time will vary depending upon the individual case. Any comments on the amount of time you require to complete this form and/or suggestions for reducing this burden should be sent to the Chief Information Officer, U.S. Patent and Trademark Office, U.S. Department of Commerce, P.O. Box 1450, Alexandria, VA 22313-1450. DO NOT SEND FEES OR COMPLETED FORMS TO THIS ADDRESS.

Approved for use through 01/31/2012. OMB 0651-0058
U.S.Patent and Trademark Office; U.S. DEPARTMENT OF COMMERCE

Under the Paperwork Reduction Act of 1995, no persons are required to respond to a collection of information unless it displays a valid OMB control number.

REQUEST FOR PARTICIPATION IN THE PCT-PPH PILOT PROGRAM BETWEEN THE EPO AND THE USPTO

(continued)

Application No.:	13/143,679
First Named Inventor:	Robert Koeppe

d. **(1) An information disclosure statement listing the documents cited in the international work products (ISR, WO/ISA, WO/IPEA, IPER) of the corresponding PCT application.**

- [x] Is attached
- [ ] Has already been filed in the above-identified U.S. application on _____

(2) Copies of all documents (except) for U.S. patents or U.S. patent application publications)

- [x] Are attached.
- [ ] Have already been filed in the above-identified U.S. application on _____

II. Claims Correspondence Table:

Claims in US Application	Patentable Claims in the corresponding PCT Application	Explanation regarding the correspondence
1	1	amended to put into U.S. format and address IPRP Box VIII
2	2	amended to put into U.S. format
3	3	amended to put into U.S. format and remove multiple dependencies
4	4	amended to put into U.S. format and remove multiple dependencies
5	5	amended to put into U.S. format and remove multiple dependencies
6	6	amended to put into U.S. format and remove multiple dependencies
7	7	amended to put into U.S. format and remove multiple dependencies
8	8	amended to put into U.S. format and remove multiple dependencies
9	9	amended to put into U.S. format and remove multiple dependencies
10	10	amended to put into U.S. format
11	11	amended to put into U.S. format
12	12	amended to put into U.S. format and remove multiple dependencies

III. All the claims in the US application sufficiently correspond to the patentable claims in the corresponding PCT application.

Signature /John E. Nemazi/	Date September 1, 2011
Name (Print/Typed) John E. Nemazi	Registration Number 30876

Privacy Act Statement

The **Privacy Act of 1974 (P.L. 93-579)** requires that you be given certain information in connection with your submission of the attached form related to a patent application or patent. Accordingly, pursuant to the requirements of the Act, please be advised that: (1) the general authority for the collection of this information is 35 U.S.C. 2(b)(2); (2) furnishing of the information solicited is voluntary; and (3) the principal purpose for which the information is used by the U.S. Patent and Trademark Office is to process and/or examine your submission related to a patent application or patent. If you do not furnish the requested information, the U.S. Patent and Trademark Office may not be able to process and/or examine your submission, which may result in termination of proceedings or abandonment of the application or expiration of the patent.

The information provided by you in this form will be subject to the following routine uses:

1. The information on this form will be treated confidentially to the extent allowed under the Freedom of Information Act (5 U.S.C. 552) and the Privacy Act (5 U.S.C 552a). Records from this system of records may be disclosed to the Department of Justice to determine whether disclosure of these records is required by the Freedom of Information Act.
2. A record from this system of records may be disclosed, as a routine use, in the course of presenting evidence to a court, magistrate, or administrative tribunal, including disclosures to opposing counsel in the course of settlement negotiations.
3. A record in this system of records may be disclosed, as a routine use, to a Member of Congress submitting a request involving an individual, to whom the record pertains, when the individual has requested assistance from the Member with respect to the subject matter of the record.
4. A record in this system of records may be disclosed, as a routine use, to a contractor of the Agency having need for the information in order to perform a contract. Recipients of information shall be required to comply with the requirements of the Privacy Act of 1974, as amended, pursuant to 5 U.S.C. 552a(m).
5. A record related to an International Application filed under the Patent Cooperation Treaty in this system of records may be disclosed, as a routine use, to the International Bureau of the World Intellectual Property Organization, pursuant to the Patent Cooperation Treaty.
6. A record in this system of records may be disclosed, as a routine use, to another federal agency for purposes of National Security review (35 U.S.C. 181) and for review pursuant to the Atomic Energy Act (42 U.S.C. 218(c)).
7. A record from this system of records may be disclosed, as a routine use, to the Administrator, General Services, or his/her designee, during an inspection of records conducted by GSA as part of that agency's responsibility to recommend improvements in records management practices and programs, under authority of 44 U.S.C. 2904 and 2906. Such disclosure shall be made in accordance with the GSA regulations governing inspection of records for this purpose, and any other relevant (*i.e.*, GSA or Commerce) directive. Such disclosure shall not be used to make determinations about individuals.
8. A record from this system of records may be disclosed, as a routine use, to the public after either publication of the application pursuant to 35 U.S.C. 122(b) or issuance of a patent pursuant to 35 U.S.C. 151. Further, a record may be disclosed, subject to the limitations of 37 CFR 1.14, as a routine use, to the public if the record was filed in an application which became abandoned or in which the proceedings were terminated and which application is referenced by either a published application, an application open to public inspection or an issued patent.
9. A record from this system of records may be disclosed, as a routine use, to a Federal, State, or local law enforcement agency, if the USPTO becomes aware of a violation or potential violation of law or regulation.

UNITED STATES PATENT AND TRADEMARK OFFICE

UNITED STATES DEPARTMENT OF COMMERCE
United States Patent and Trademark Office
Address: COMMISSIONER FOR PATENTS
P.O. Box 1450
Alexandria, Virginia 22313-1450
www.uspto.gov

APPLICATION NO.	FILING DATE	FIRST NAMED INVENTOR	ATTORNEY DOCKET NO.	CONFIRMATION NO.
13/143,679	07/07/2011	Robert Koeppe	HINT0102PUSA	7890

22045 7590 11/10/2011
BROOKS KUSHMAN P.C.
1000 TOWN CENTER
TWENTY-SECOND FLOOR
SOUTHFIELD, MI 48075

EXAMINER

ART UNIT	PAPER NUMBER
2878	

MAIL DATE	DELIVERY MODE
11/10/2011	PAPER

Please find below and/or attached an Office communication concerning this application or proceeding.

The time period for reply, if any, is set in the attached communication.

UNITED STATES PATENT AND TRADEMARK OFFICE

Commissioner for Patents
United States Patent and Trademark Office
P.O. Box 1450
Alexandria, VA 22313-1450
www.uspto.gov

BROOKS KUSHMAN P.C.
1000 TOWN CENTER
TWENTY-SECOND FLOOR
SOUTHFIELD MI 48075

In re Application of
KOEPPE et al.
Application No.: 13/143,679
Filed: July 7, 2011
Attorney Docket No.: HINT0102PUSA

: DECISION ON REQUEST TO
: PARTICIPATE IN THE PATENT
: PROSECUTION HIGHWAY
: PROGRAM AND PETITION
: TO MAKE SPECIAL UNDER
: 37 CFR 1.102(a)

This is a decision on the request to participate in the PCT Patent Prosecution Highway (PCT-PPH) pilot program and the petition under 37 CFR 1.102(a), filed on September 1, 2011 to make the above-identified application special.

The request and petition are **GRANTED**.

Discussion

A grantable request to participate in the PCT-PPH pilot program and petition to make special require:

(1) The U.S. application must have an eligible relationship to one or more PCT applications where the ISA or IPEA are the JPO, EPO, KIPO, NPI, or USPTO;

(2) At least one claim in the PCT application has novelty, inventive step, and industrial applicability and must be free of any observations in Box VIII in the latest work product in the international stage or applicant must identify and explain why the claim(s) is/are not subject to the observation in Box VIII;

(3) Applicant must submit a copy of the claim(s) from the PCT application(s) that have novelty, inventive step, and industrial applicability along with an English translation thereof and a statement that the English translation is accurate, if the claims are not in the English language;

(4) All the claims in the U.S. application must sufficiently correspond or be amended to sufficiently correspond to the claim(s) that have novelty, inventive step, and industrial applicability in the PCT application(s);

(5) Examination of the U.S. application has not begun;

(6) Applicant must submit a copy of the latest international work product from the PCT application indicating that the claim(s) have novelty, inventive step, and industrial applicability along with an English translation thereof and a statement that the English translation is accurate

if the latest international work product is not in the English language;

(7) Applicant must submit an IDS listing the documents cited by the PCT examiner in the international work product along with copies of documents except U.S. patents or U.S. patent application publications.

The request to participate in the PCT-PPH pilot program and petition comply with the above requirements. Accordingly, the above-identified application has been accorded "special" status.

Telephone inquiries concerning this decision should be directed to Colleen Dunn at 571-272-1170.

All other inquiries concerning the examination or status of the application is accessible in the PAIR system at http://www.uspto.gov/ebc.index.html.

This application will be forwarded to the examiner for action on the merits commensurate with this decision once this application's formality reviews have been completed.

/Colleen Dunn/

Colleen Dunn
TQAS, TC 2800

PTO/SB/20PCT-EP (05-10)
Approved for use through 01/31/2012. OMB 0651-0058
U.S. Patent and Trademark Office, U.S. DEPARTMENT OF COMMERCE
Under the Paperwork Reduction Act of 1995, no persons are required to respond to a collection of information unless it displays a valid OMB control number.

REQUEST FOR PARTICIPATION IN THE PATENT COOPERATION TREATY - PATENT PROSECUTION HIGHWAY (PCT-PPH) PILOT PROGRAM BETWEEN THE EUROPEAN PATENT OFFICE (EPO) AND THE USPTO

Application No:	13/143,738	Filing date:	September 9, 2011
First Named Inventor:	Helge Riemann		
Title of the Invention:	Method and device for producing thin silicon rods		

THIS REQUEST FOR PARTICIPATION IN THE PCT-PPH PILOT PROGRAM ALONG WITH THE REQUIRED DOCUMENTS MUST BE SUBMITTED VIA EFS-WEB. INFORMATION REGARDING EFS-WEB IS AVAILABLE AT HTTP://WWW.USPTO.GOV/EBC/EFS_HELP.HTML

APPLICANT HEREBY REQUESTS PARTICIPATION IN THE PCT-PPH PROGRAM AND PETITIONS TO MAKE THE ABOVE-IDENTIFIED APPLICATION SPECIAL UNDER THE PCT-PPH PROGRAM.

The above-identified application is (1) a national stage entry of the corresponding PCT application, or (2) a national stage entry of another PCT application which claims priority to the corresponding PCT application, or (3) a national application that claims domestic/ foreign priority to the corresponding PCT application, or (4) a national application which forms the basis for the priority claim in the corresponding PCT application, or (5) a continuing application of a U.S. application that satisfies one of (1) to (4) above, or (6) a U.S. application that claims domestic benefit to a U.S. provisional application which forms the basis for the priority claim in the corresponding PCT application.

The corresponding PCT application number(s) is/are: PCT/DE2010/000070

The international filing date of the corresponding PCT application(s) is/are: January 19, 2010

I. List of Required Documents:

a. **A copy of the latest international work product (WO/ISA, WO/IPEA, or IPER) in the above-identified corresponding PCT application(s)**

[x] Is attached

[ ] Is not attached because the document is already in the U.S. application.

b. **A copy of all claims which were indicated as having novelty, inventive step and industrial applicability in the above-identified corresponding PCT application(s).**

[x] Is attached.

[ ] Is not attached because the document is already in the U.S. application.

c. **English translations of the documents in a. and b. above are attached (if the documents are not in the English language). A statement that the English translation is accurate is attached for the document in b. above.**

This collection of information is required by 35 U.S.C. 119, 37 CFR 1.55, and 37 CFR 1.102(d). The information is required to obtain or retain a benefit by the public, which is to file (and by the USPTO to process) an application. Confidentiality is governed by 35 U.S.C. 122 and 37 CFR 1.11 and 1.14. This collection is estimated to take 2 hours to complete, including gathering, preparing, and submitting the completed application form to the USPTO. Time will vary depending upon the individual case. Any comments on the amount of time you require to complete this form and/or suggestions for reducing this burden should be sent to the Chief Information Officer, U.S. Patent and Trademark Office, U.S. Department of Commerce, P.O. Box 1450, Alexandria, VA 22313-1450. DO NOT SEND FEES OR COMPLETED FORMS TO THIS ADDRESS.

Approved for use through 01/31/2012. OMB 0651-0058
U.S.Patent and Trademark Office; U.S. DEPARTMENT OF COMMERCE
Under the Paperwork Reduction Act of 1995, no persons are required to respond to a collection of information unless it displays a valid OMB control number

REQUEST FOR PARTICIPATION IN THE PCT-PPH PILOT PROGRAM BETWEEN THE EPO AND THE USPTO

(continued)

Application No.:	13/143,738
First Named Inventor:	Helge Riemann

d. **(1) An information disclosure statement listing the documents cited in the international work products (ISR, WO/ISA, WO/IPEA, IPER) of the corresponding PCT application.**

☐ Is attached

☒ Has already been filed in the above-identified U.S. application on July 21, 2011

(2) Copies of all documents (except) for U.S. patents or U.S. patent application publications)

☐ Are attached.

☒ Have already been filed in the above-identified U.S. application on July 21, 2011

II. Claims Correspondence Table:

Claims in US Application	Patentable Claims in the corresponding PCT Application	Explanation regarding the correspondence
		SEE ATTACHED CLAIMS CORRESPONDENCE TABLE

III. All the claims in the US application sufficiently correspond to the patentable claims in the corresponding PCT application.

Signature Erik R. Swanson	Date 28 November 2011
Name (Print/Typed) Erik R. Swanson	Registration Number 40,833

II. Claims Correspondence Table:

Claims in US Application	Patentable claims in the Corresponding PCT Application	Explanation regarding the correspondence
20	1	U.S. claim 20 recites a "flat induction coil"; PCT claim 1 recites a "flat induction coil . . . which has only one coil".
21	1	U.S. claim 21 recites "wherein the flat induction coil has one coil".
22	2	
24	3	
23	4	
25	5	
26	6	U.S. claim 26 recites a "preselected doping"; PCT claim 6 recites a "required doping".
27	7	
28	8	
29	9	
30	10	Claim 30 is an independent device claim; PCT claim 10 depends from PCT method claim 20. U.S. claim 30 recites a "flat induction coil"; PCT claim 10 recites a "flat induction coil which has only one coil".
31	10	U.S. claim 31 recites "wherein the flat induction coil has one coil".
32	11	
33	12	
34	13	
35	14	U.S. claim 35 recites a "shield plate disposed above the induction coil"; PCT claim 14 recites a "shield plate is located a small distance above the induction coil".
36	15	
37	16	
38	17	U.S. claim 38 recites "synchronously"; PCT claim 17 recites "synchronously, at the same time and at the same speed".
39	18	
40	19	U.S. claim 40 recites "gas locks including a plurality of long tubes disposed . . . above the plurality of draw openings"; PCT claim 19 recites "gas locks in the form of long tubes . . . above the draw openings . . . and the openings in the shield plate".

UNITED STATES PATENT AND TRADEMARK OFFICE

Commissioner for Patents
United States Patent and Trademark Office
P.O. Box 1450
Alexandria, VA 22313-1450
www.uspto.gov

Leydig, Voit & Mayer, Ltd. (Frankfurt office)
Two Prudential Plaza, Suite 4900
180 North Stetson Avenue
Chicago, IL 60601-6731

MAILED
JAN 20 2012
OFFICE OF PETITIONS

In re Application of	:
Helge Riemann, et. al.	: DECISION ON REQUEST TO
Application No.: 13/143,738	: PARTICIPATE IN THE PATENT
Filed: September 9, 2011	: PROSECUTION HIGHWAY
Attorney Docket No.: 812610	: PROGRAM AND PETITION
For: METHOD AND DEVICE FOR	: TO MAKE SPECIAL UNDER
PRODUCING THIN SILICON RODS	: 37 CFR 1.102(a)

This is a decision on the request to participate in the PCT Patent Prosecution Highway (PCT-PPH) pilot program and the petition under 37 CFR 1.102(a), filed on November 28, 2011, to make the above-identified application special.

The request and petition are **GRANTED**.

Discussion

A grantable request to participate in the PCT-PPH pilot program and petition to make special require:

(1) The U.S. application must have an eligible relationship to one or more PCT applications where the ISA or IPEA are the Australia, Austria, EPO, Finland, JPO, KIPO, NPI, NBPR, Spain, Sweden, USPTO, or CHINA;

(2) At least one claim in the PCT application has novelty, inventive step, and industrial applicability and must be free of any observations in Box VIII in the latest work product in the international stage or applicant must identify and explain why the claim(s) is/are not subject to the observation in Box VIII;

(3) Applicant must submit a copy of the claim(s) from the PCT application(s) that have novelty, inventive step, and industrial applicability along with an English translation thereof and a statement that the English translation is accurate, if the claims are not in the English language;

(4) All the claims in the U.S. application must sufficiently correspond or be amended to sufficiently correspond to the claim(s) that have novelty, inventive step, and industrial applicability in the PCT application(s);

(5) Examination of the U.S. application has not begun;

(6) Applicant must submit a copy of the latest international work product from the PCT application indicating that the claim(s) have novelty, inventive step, and industrial applicability along with an English translation thereof and a statement that the English translation is accurate if the latest international work product is not in the English language;

(7) Applicant must submit an IDS listing the documents cited by the PCT examiner in the international work product along with copies of documents except U.S. patents or U.S. patent application publications.

The request to participate in the PCT-PPH pilot program and petition comply with the above requirements. Accordingly, the above-identified application has been accorded "special" status.

Telephone inquiries concerning this decision should be directed to Andrea Smith at (571) 272-3226. All other inquiries concerning the examination or status of the application is accessible in the PAIR system at http://www.uspto.gov/ebc.index.html.

This application will be forwarded to the examiner for action on the merits commensurate with this decision.

/Andrea Smith/
Andrea Smith
Petitions Examiner
Office of Petitions

/David Bucci
Petitions Examiner

PTO/SB/20PCT-EP (05-10)
Approved for use through 01/31/2012. OMB 0651-0058
U.S. Patent and Trademark Office; U. S. DEPARTMENT OF COMMERCE
Under the Paperwork Reduction Act of 1995, no persons are required to respond to a collection of information unless it displays a valid OMB control number.

REQUEST FOR PARTICIPATION IN THE PATENT COOPERATION TREATY - PATENT PROSECUTION HIGHWAY (PCT-PPH) PILOT PROGRAM BETWEEN THE EUROPEAN PATENT OFFICE (EPO) AND THE USPTO

Application No:	13/143,770	Filing date:	July 8, 2011
First Named Inventor:	Theo Nijhuis		
Title of the Invention:	Machine for fluid transportation		

THIS REQUEST FOR PARTICIPATION IN THE PCT-PPH PILOT PROGRAM ALONG WITH THE REQUIRED DOCUMENTS MUST BE SUBMITTED VIA EFS-WEB. INFORMATION REGARDING EFS-WEB IS AVAILABLE AT HTTP://WWW.USPTO.GOV/EBC/EFS_HELP.HTML

APPLICANT HEREBY REQUESTS PARTICIPATION IN THE PCT-PPH PROGRAM AND PETITIONS TO MAKE THE ABOVE-IDENTIFIED APPLICATION SPECIAL UNDER THE PCT-PPH PROGRAM.

The above-identified application is (1) a national stage entry of the corresponding PCT application, or (2) a national stage entry of another PCT application which claims priority to the corresponding PCT application, or (3) a national application that claims domestic/ foreign priority to the corresponding PCT application, or (4) a national application which forms the basis for the priority claim in the corresponding PCT application, or (5) a continuing application of a U.S. application that satisfies one of (1) to (4) above, or (6) a U.S. application that claims domestic benefit to a U.S. provisional application which forms the basis for the priority claim in the corresponding PCT application.

The corresponding PCT application number(s) is/are: PCT/EP2010/050120

The international date of the corresponding PCT application(s) is/are: January 8, 2010

I. List of Required Documents:

a. **A copy of the latest international work product (WO/ISA, WO/IPEA, or IPER) in the above--identified corresponding PCT application(s)**

☐ Is attached

☑ Is not attached because the document is already in the U.S. application.

b. **A copy of all claims which were indicated as having novelty, inventive step and industrial applicability in the above-identified corresponding PCT application(s).**

☐ Is attached.

☑ Is not attached because the document is already in the U.S. application.

c. **English translations of the documents in a. and b. above are attached (if the documents are not in the English language). A statement that the English translation is accurate is attached for the document in b. above.**

This collection of information is required by 35 U.S.C. 119, 37 CFR 1.55, and 37 CFR 1.102(d). The information is required to obtain or retain a benefit by the public, which is to file (and by the USPTO to process) an application. Confidentiality is governed by 35 U.S.C. 122 and 37 CFR 1.11 and 1.14. This collection is estimated to take 2 hours to complete, including gathering, preparing, and submitting the completed application form to the USPTO. Time will vary depending upon the individual case. Any comments on the amount of time you require to complete this form and/or suggestions for reducing this burden should be sent to the Chief Information Officer, U.S. Patent and Trademark Office, U.S. Department of Commerce, P.O. Box 1450, Alexandria, VA 22313-1450. DO NOT SEND FEES OR COMPLETED FORMS TO THIS ADDRESS.

Approved for use through 01/31/2012. OMB 0651-0058
U.S.Patent and Trademark Office; U.S. DEPARTMENT OF COMMERCE
Under the Paperwork Reduction Act of 1995, no persons are required to respond to a collection of information unless it displays a valid OMB control number.

REQUEST FOR PARTICIPATION IN THE PCT-PPH PILOT PROGRAM BETWEEN THE EPO AND THE USPTO

(continued)

Application No.:	13/143,770
First Named Inventor:	Theo Nijhuis

d. **(1) An information disclosure statement listing the documents cited in the international work products (ISR, WO/ISA, WO/IPEA, IPER) of the corresponding PCT application.**

☐ Is attached

☑ Has already been filed in the above-identified U.S. application on July 8, 2011

(2) Copies of all documents (except) for U.S. patents or U.S. patent application publications)

☐ Are attached.

☑ Have already been filed in the above-identified U.S. application on July 8, 2011

II. Claims Correspondence Table:

Claims in US Application	Patentable Claims in the corresponding PCT Application	Explanation regarding the correspondence
8	1	According to Preliminary Amendment filed July 8, 2011
9	2	According to Preliminary Amendment filed July 8, 2011
10	3	According to Preliminary Amendment filed July 8, 2011
11	4	According to Preliminary Amendment filed July 8, 2011
12	5	According to Preliminary Amendment filed July 8, 2011
13	6	According to Preliminary Amendment filed July 8, 2011
14	7	According to Preliminary Amendment filed July 8, 2011
15	1	According to Preliminary Amendment filed July 8, 2011
16	2	According to Preliminary Amendment filed July 8, 2011
17	3	According to Preliminary Amendment filed July 8, 2011
18	4	According to Preliminary Amendment filed July 8, 2011
19	5	According to Preliminary Amendment filed July 8, 2011
20	6	According to Preliminary Amendment filed July 8, 2011
21	7	According to Preliminary Amendment filed July 8, 2011

III. All the claims in the US application sufficiently correspond to the patentable claims in the corresponding PCT application.

Signature Tina Gonka	Date July 8, 2011
Name (Print/Typed) Tina Gonka	Registration Number L0623

Privacy Act Statement

The **Privacy Act of 1974 (P.L. 93-579)** requires that you be given certain information in connection with your submission of the attached form related to a patent application or patent. Accordingly, pursuant to the requirements of the Act, please be advised that: (1) the general authority for the collection of this information is 35 U.S.C. 2(b)(2); (2) furnishing of the information solicited is voluntary; and (3) the principal purpose for which the information is used by the U.S. Patent and Trademark Office is to process and/or examine your submission related to a patent application or patent. If you do not furnish the requested information, the U.S. Patent and Trademark Office may not be able to process and/or examine your submission, which may result in termination of proceedings or abandonment of the application or expiration of the patent.

The information provided by you in this form will be subject to the following routine uses:

1. The information on this form will be treated confidentially to the extent allowed under the Freedom of Information Act (5 U.S.C. 552) and the Privacy Act (5 U.S.C 552a). Records from this system of records may be disclosed to the Department of Justice to determine whether disclosure of these records is required by the Freedom of Information Act.
2. A record from this system of records may be disclosed, as a routine use, in the course of presenting evidence to a court, magistrate, or administrative tribunal, including disclosures to opposing counsel in the course of settlement negotiations.
3. A record in this system of records may be disclosed, as a routine use, to a Member of Congress submitting a request involving an individual, to whom the record pertains, when the individual has requested assistance from the Member with respect to the subject matter of the record.
4. A record in this system of records may be disclosed, as a routine use, to a contractor of the Agency having need for the information in order to perform a contract. Recipients of information shall be required to comply with the requirements of the Privacy Act of 1974, as amended, pursuant to 5 U.S.C. 552a(m).
5. A record related to an International Application filed under the Patent Cooperation Treaty in this system of records may be disclosed, as a routine use, to the International Bureau of the World Intellectual Property Organization, pursuant to the Patent Cooperation Treaty.
6. A record in this system of records may be disclosed, as a routine use, to another federal agency for purposes of National Security review (35 U.S.C. 181) and for review pursuant to the Atomic Energy Act (42 U.S.C. 218(c)).
7. A record from this system of records may be disclosed, as a routine use, to the Administrator, General Services, or his/her designee, during an inspection of records conducted by GSA as part of that agency's responsibility to recommend improvements in records management practices and programs, under authority of 44 U.S.C. 2904 and 2906. Such disclosure shall be made in accordance with the GSA regulations governing inspection of records for this purpose, and any other relevant (*i.e.*, GSA or Commerce) directive. Such disclosure shall not be used to make determinations about individuals.
8. A record from this system of records may be disclosed, as a routine use, to the public after either publication of the application pursuant to 35 U.S.C. 122(b) or issuance of a patent pursuant to 35 U.S.C. 151. Further, a record may be disclosed, subject to the limitations of 37 CFR 1.14, as a routine use, to the public if the record was filed in an application which became abandoned or in which the proceedings were terminated and which application is referenced by either a published application, an application open to public inspection or an issued patent.
9. A record from this system of records may be disclosed, as a routine use, to a Federal, State, or local law enforcement agency, if the USPTO becomes aware of a violation or potential violation of law or regulation.

UNITED STATES PATENT AND TRADEMARK OFFICE

UNITED STATES DEPARTMENT OF COMMERCE
United States Patent and Trademark Office
Address: COMMISSIONER FOR PATENTS
P.O. Box 1450
Alexandria, Virginia 22313-1450
www.uspto.gov

APPLICATION NO.	FILING DATE	FIRST NAMED INVENTOR	ATTORNEY DOCKET NO.	CONFIRMATION NO.
13/143,774	09/15/2011	Hiroyuki Ishii	17470/150001	8955

22511 7590 11/17/2011
OSHA LIANG L.L.P.
TWO HOUSTON CENTER
909 FANNIN, SUITE 3500
HOUSTON, TX 77010

EXAMINER
PHILLIPS, HASSAN A

ART UNIT	PAPER NUMBER
2467	

NOTIFICATION DATE	DELIVERY MODE
11/17/2011	ELECTRONIC

Please find below and/or attached an Office communication concerning this application or proceeding.

The time period for reply, if any, is set in the attached communication.

Notice of the Office communication was sent electronically on above-indicated "Notification Date" to the following e-mail address(es):

docketing@oshaliang.com
hathaway@oshaliang.com
kennedy@oshaliang.com

UNITED STATES PATENT AND TRADEMARK OFFICE

Commissioner for Patents
United States Patent and Trademark Office
P.O. Box 1450
Alexandria, VA 22313-1450
www.uspto.gov

OSHA LIANG L.L.P.
TWO HOUSTON CENTER
909 FANNIN, SUITE 3500
HOUSTON, TX 77010

In re Application of: ISHII, HIROYUKI et al.
Application No. 13/143774
Filed: September 15, 2011
For: TEST METHOD AND TEST DEVICE

DECISION ON REQUEST TO PARTICIPATE IN PATENT PROSECUTION HIGHWAY PROGRAM AND PETITION TO MAKE SPECIAL UNDER 37 CFR 1.102(a)

MAILED

NOV 16 2011

DIRECTOR OFFICE
TECHNOLOGY CENTER 2400

This is a decision on the request to participate in the Patent Prosecution Highway (PPH) program and the petition under 37 CFR 1.102(a), filed September 15, 2011, to make the above-identified application special.

The petition is **GRANTED.**

A grantable request to participate in the PPH program and petition to make special require:

1. The U.S. application for which participation in the PPH program is requested and the corresponding JPO application must have the same priority/filing date;

2. Applicant must submit a copy of:
   a. The allowable/patentable claim(s) from the JPO application(s);
   b. An English translation of the allowable/patentable claim(s); and
   c. A statement that the English translation is accurate;

3. Applicant must
   a. Ensure all the claims in the U.S. application must sufficiently correspond or be amended to sufficiently correspond to one or more of those claims indicated as allowable/patentable claim(s) in the JPO application(s). Claims are considered to "sufficiently correspond" where, accounting for differences due to translations and claim format, the claims in the USPTO are of the same or similar scope as the claims in the JPO, or the claims in the USPTO are narrower in scope than the claims in the JPO. In this regard, a claim that is narrower in scope occurs when a JPO claim is amended to be further limited by an additional feature that is supported in the specification (description and/or claims). A claim in the USPTO which introduces a new/different category of claims to those claims indicated as allowable in the JPO is not considered to sufficiently correspond. For example, if the JPO claims only contain claims to a process of manufacturing a product, then the claims in the USPTO are not considered to sufficiently correspond if the USPTO claims introduce product claims that are dependent on the corresponding process claims; and

b. Submit a claims correspondence table in English;

4. Examination of the U.S. application has not begun;

5. Applicant must submit:
   a. Documentation of prior office action:
      i. a copy of the office action(s) just prior to the "Decision to Grant a Patent" from each of the JPO application(s) containing the allowable/patentable claim(s) or
      ii. if the allowable/patentable claims(s) are from a "Notification of Reasons for Refusal" then the Notification of Reasons for Refusal or
      iii. if the JPO application is a first action allowance then no office action from the JPO is necessary should be indicated on the request/petition form;
   b. An English language translation of the JPO Office action from (5)(a)(i)-(ii) above
   c. A statement that the English translation is accurate (if the translation is not a machine translation provided by the JPO);

6. Applicant must submit:
   a. An IDS listing the documents cited by the JPO examiner in the JPO office action (unless already submitted in this application)
   b. Copies of the documents except U.S. patents or U.S. patent application publications (unless already submitted in this application);

The request to participate in the PPH program and petition are found to comply with the above requirements. Accordingly, the above-identified application has been accorded "special" status.

Telephone inquiries concerning this decision should be directed to Chau Nguyen at 571-272-3126.

All other inquiries concerning the examination or status of the application is accessible in the PAIR system at http://www.uspto.gov/ebc/index.html.

The application is being forwarded to the examiner for action on the merits commensurate with this decision.

/Chau Nguyen/

Chau Nguyen
Quality Assurance Specialist
Technology Center 2400

PTO/SB/20PCT-US (09-10)
Approved for use through 01/31/2012. OMB 0651-0058
U.S. Patent and Trademark Office; U. S. DEPARTMENT OF COMMERCE
Under the Paperwork Reduction Act of 1995, no persons are required to respond to a collection of information unless it displays a valid OMB control number.

REQUEST FOR PARTICIPATION IN THE PATENT COOPERATION TREATY - PATENT PROSECUTION HIGHWAY (PCT-PPH) PILOT PROGRAM IN A U.S. APPLICATION WHERE THE USPTO WAS THE ISA OR IPEA

Application No:	Unknown	Filing date:	Herewith
First Named Inventor:	Brian J. Barclay		
Title of the Invention:	PRESENTING NETWORK-WIDE EVENTS IN NETWORK WAGERING VENUE		

THIS REQUEST FOR PARTICIPATION IN THE PCT-PPH PILOT PROGRAM ALONG WITH THE REQUIRED DOCUMENTS MUST BE SUBMITTED VIA EFS-WEB. INFORMATION REGARDING EFS-WEB IS AVAILABLE AT HTTP://WWW.USPTO.GOV/EBC/EFS_HELP.HTML

APPLICANT HEREBY REQUESTS PARTICIPATION IN THE PCT-PPH PROGRAM AND PETITIONS TO MAKE THE ABOVE-IDENTIFIED APPLICATION SPECIAL UNDER THE PCT-PPH PROGRAM.

The above-identified application is (1) a national stage entry of the corresponding PCT application, or (2) a national stage entry of another PCT application which claims priority to the corresponding PCT application, or (3) a national application that claims domestic/ foreign priority to the corresponding PCT application, or (4) a national application which forms the basis for the priority claim in the corresponding PCT application, or (5) a continuing application of a U.S. application that satisfies one of (1) to (4) above, or (6) a U.S. application that claims domestic benefit to a U.S. provisional application which forms the basis for the priority claim in the corresponding PCT application.

The corresponding PCT application number(s) is/are: PCT/US10/21089

The international date of the corresponding PCT application(s) is/are: Jan-14-2010

I. List of Required Documents:

a. **A copy of the latest international work product (WO/ISA, WO/IPEA, or IPER) in the above–identified corresponding PCT application(s)**

- [x] Is attached
- [ ] Is not attached because the document is already in the U.S. application.

b. **A copy of all claims which were indicated as having novelty, inventive step and industrial applicability in the above-identified corresponding PCT application(s).**

- [x] Is attached.
- [ ] Is not attached because the document is already in the U.S. application.

c. **English translations of the documents in a. and b. above are attached (if the documents are not in the English language). A statement that the English translation is accurate is attached for the document in b. above.**

This collection of information is required by 35 U.S.C. 119, 37 CFR 1.55, and 37 CFR 1.102(d). The information is required to obtain or retain a benefit by the public, which is to file (and by the USPTO to process) an application. Confidentiality is governed by 35 U.S.C. 122 and 37 CFR 1.11 and 1.14. This collection is estimated to take 2 hours to complete, including gathering, preparing, and submitting the completed application form to the USPTO. Time will vary depending upon the individual case. Any comments on the amount of time you require to complete this form and/or suggestions for reducing this burden should be sent to the Chief Information Officer, U.S. Patent and Trademark Office, U.S. Department of Commerce, P.O. Box 1450, Alexandria, VA 22313-1450. DO NOT SEND FEES OR COMPLETED FORMS TO THIS ADDRESS.

Under the Paperwork Reduction Act of 1995, no persons are required to respond to a collection of information unless it displays a valid OMB control number.

REQUEST FOR PARTICIPATION IN THE PCT-PPH PILOT PROGRAM IN A U.S. APPLICATION WHERE THE USPTO WAS THE ISA OR IPEA

(continued)

Application No.:	Unknown
First Named Inventor:	Brian J. Barclay

d. **(1) An information disclosure statement listing the documents cited in the international work products (ISR, WO/ISA, WO/IPEA, IPER) of the corresponding PCT application.**

- [x] Is attached
- [ ] Has already been filed in the above-identified U.S. application on _____

(2) Copies of all documents (except) for U.S. patents or U.S. patent application publications)

- [x] Are attached.
- [ ] Have already been filed in the above-identified U.S. application on _____

II. Claims Correspondence Table:

Claims in US Application	Patentable Claims in the corresponding PCT Application	Explanation regarding the correspondence
1-25	1-25	Same claims.

III. All the claims in the US application sufficiently correspond to the patentable claims in the corresponding PCT application.

Signature /Andrew DeLizio Reg. 52,806/	Date July 7, 2011
Name (Print/Typed) Andrew DeLizio	Registration Number 52,806

Privacy Act Statement

The **Privacy Act of 1974 (P.L. 93-579)** requires that you be given certain information in connection with your submission of the attached form related to a patent application or patent. Accordingly, pursuant to the requirements of the Act, please be advised that: (1) the general authority for the collection of this information is 35 U.S.C. 2(b)(2); (2) furnishing of the information solicited is voluntary; and (3) the principal purpose for which the information is used by the U.S. Patent and Trademark Office is to process and/or examine your submission related to a patent application or patent. If you do not furnish the requested information, the U.S. Patent and Trademark Office may not be able to process and/or examine your submission, which may result in termination of proceedings or abandonment of the application or expiration of the patent.

The information provided by you in this form will be subject to the following routine uses:

1. The information on this form will be treated confidentially to the extent allowed under the Freedom of Information Act (5 U.S.C. 552) and the Privacy Act (5 U.S.C 552a). Records from this system of records may be disclosed to the Department of Justice to determine whether disclosure of these records is required by the Freedom of Information Act.
2. A record from this system of records may be disclosed, as a routine use, in the course of presenting evidence to a court, magistrate, or administrative tribunal, including disclosures to opposing counsel in the course of settlement negotiations.
3. A record in this system of records may be disclosed, as a routine use, to a Member of Congress submitting a request involving an individual, to whom the record pertains, when the individual has requested assistance from the Member with respect to the subject matter of the record.
4. A record in this system of records may be disclosed, as a routine use, to a contractor of the Agency having need for the information in order to perform a contract. Recipients of information shall be required to comply with the requirements of the Privacy Act of 1974, as amended, pursuant to 5 U.S.C. 552a(m).
5. A record related to an International Application filed under the Patent Cooperation Treaty in this system of records may be disclosed, as a routine use, to the International Bureau of the World Intellectual Property Organization, pursuant to the Patent Cooperation Treaty.
6. A record in this system of records may be disclosed, as a routine use, to another federal agency for purposes of National Security review (35 U.S.C. 181) and for review pursuant to the Atomic Energy Act (42 U.S.C. 218(c)).
7. A record from this system of records may be disclosed, as a routine use, to the Administrator, General Services, or his/her designee, during an inspection of records conducted by GSA as part of that agency's responsibility to recommend improvements in records management practices and programs, under authority of 44 U.S.C. 2904 and 2906. Such disclosure shall be made in accordance with the GSA regulations governing inspection of records for this purpose, and any other relevant (*i.e.*, GSA or Commerce) directive. Such disclosure shall not be used to make determinations about individuals.
8. A record from this system of records may be disclosed, as a routine use, to the public after either publication of the application pursuant to 35 U.S.C. 122(b) or issuance of a patent pursuant to 35 U.S.C. 151. Further, a record may be disclosed, subject to the limitations of 37 CFR 1.14, as a routine use, to the public if the record was filed in an application which became abandoned or in which the proceedings were terminated and which application is referenced by either a published application, an application open to public inspection or an issued patent.
9. A record from this system of records may be disclosed, as a routine use, to a Federal, State, or local law enforcement agency, if the USPTO becomes aware of a violation or potential violation of law or regulation.

UNITED STATES PATENT AND TRADEMARK OFFICE

Commissioner for Patents
United States Patent and Trademark Office
P.O. Box 1450
Alexandria, VA 22313-1450
www.uspto.gov

OBLON, SPIVAK, MCCLELLAND
MAIER & NEUSTADT, L.L.P.
1940 DUKE STREET
ALEXANDRIA VA 22314

MAILED
JAN 26 2012
OFFICE OF PETITIONS

In re Application of
Taniguchi et al.
Application No.: 13/143,803
Filed: July 8, 2011
Attorney Docket No.: 374265US99PCT
For: Solar Cell Sealing Material and Solar Cell Module Produced Using the Same

: DECISION ON REQUEST TO
: PARTICIPATE IN THE PATENT
: PROSECUTION HIGHWAY
: PROGRAM AND PETITION
: TO MAKE SPECIAL UNDER
: 37 CFR 1.102(a)

This is a decision on the request to participate in the Patent Prosecution Highway (PPH) program and the petition under 37 CFR 1.102(a), filed September 30, 2011, to make the above-identified application special.

The request and petition are **GRANTED**.

Discussion

A grantable request to participate in the PPH pilot program and petition to make special require:

1. The U.S. application is
    a. a Paris Convention application which either
        i. validly claims priority under 35 U.S.C. 119(a) and 37 CFR 1.55 to one or more applications filed in the JPO, or
        ii. validly claims priority to a PCT application that contains no priority claims, or
    b. a national stage application under the PCT (an application which entered the national stage in the U.S. from a PCT international application after compliance with 35 U.S.C. 371), which PCT application
        i. validly claims priority to an application filed in the JPO, or
        ii. validly claims priority to a PCT application that contains no priority claims, or
        iii. contains no priority claim, or
    c. a so-called bypass application filed under 35 U.S.C. 111(a) which validly claims benefit under 35 U.S.C. 120 to a PCT application, which PCT application
        i. validly claims priority to an application filed in the JPO, or
        ii. validly claims priority to a PCT application that contains no priority claims, or

iii. contains no priority claim;

2. Applicant must submit a copy of:
   a. The allowable/patentable claim(s) from the JPO application(s);
   b. An English translation of the allowable/patentable claim(s) and
   c. A statement that the English translation is accurate;
3. Applicant must:
   a. Ensure all the claims in the U.S. application must sufficiently correspond or be amended to sufficiently correspond to the allowable/patentable claim(s) in the JPO application(s) and
   b. Submit a claims correspondence table in English;
4. Examination of the U.S. application has not begun;
5. Applicant must submit:
   a. Documentation of prior office action:
      i. a copy of the office action(s) just prior to the "Decision to Grant a Patent" from each of the JPO application(s) containing the allowable/patentable claim(s) or
      ii. if the allowable/patentable claims(s) are from a "Notification of Reasons for Refusal" then the Notification of Reasons for Refusal or
      iii. if the JPO application is a first action allowance then no office action from the JPO is necessary should be indicated on the request/petition form;
   b. An English language translation of the JPO Office action from (5)(a)(i)-(ii) above
   c. A statement that the English translation is accurate;
6. Applicant must submit:
   a. An IDS listing the documents cited by the JPO examiner in the JPO office action (unless already submitted in this application)
   b. Copies of the documents except U.S. patents or U.S. patent application publications (unless already submitted in this application);

The request to participate in the PPH pilot program and petition comply with the above requirements. Accordingly, the above-identified application has been accorded "special" status.

Inquiries concerning this decision should be directed to Kimberly Inabinet at 571-272-4618.

All other inquiries concerning the examination or status of the application is accessible in the PAIR system at http://www.uspto.gov/ebc.index.html.

This application will be forwarded to the examiner for action on the merits commensurate with this decision.

David Bucci
Petitions Examiner
Office of Petitions

UNITED STATES PATENT AND TRADEMARK OFFICE

Commissioner for Patents
United States Patent and Trademark Office
Washington, D.C. 20231
www.uspto.gov

JAMES A. LABARRE
P.O. BOX 1404
ALEXANDRIA, VA 22313-1404

MAILED
AUG 16 2011
PCT LEGAL ADMINISTRATION

In re Application of :
LI, Hongfa, ET AL :
U.S. Application No.: 13/143809 : DECISION ON PETITION
PCT No.: PCT/CN09/075431 :
Int. Filing Date: 09 DECEMBER 2009 :
Priority Date: 09 DECEMBER 2008 :
For: RAW PAPER AND PRODUCTION METHOD AND APPLICATION THEREOF :

The petition to revive under 37 CFR 1.137(b) filed 08 July 2011, in the above-captioned application is hereby **GRANTED**.

Applicant states that the entire delay in filing the required reply from the due date was unintentional, as required by 37 CFR 1.137(b)(3). The appropriate petition fee has been submitted. A terminer disclaimer is not required as the application was filed on or after 08 June 1995. Accordingly, all requirements under 37 CFR 1.137(b) have been satisfied.

A review of the application file reveals that applicant has now provided payment of the full, U.S. Basic National Fee. Therefore, the request to revive the application abandoned under 35 U.S.C. 371(d) is granted as to the National stage in the United States of America.

This application is being forward
ed to the United States Designated/Elected Office (US/DO/EO) for continued processing.

Wanda Banks
Paralegal Specialist
Office of PCT Legal Administration
Tel: (571) 272-3277

Richard Cole
PCT Legal Examiner
Office of PCT Legal Administration

UNITED STATES PATENT AND TRADEMARK OFFICE

Commissioner for Patents
United States Patent and Trademark Office
Washington, D.C. 20231
www.uspto.gov

SUDHIR G. DESHMUKH
E.I. DU PONT DE NEMOURS AND COMPANY
LEGAL PATENT RECORDS CENTER
BARLEY MILL PLAZA 25/1122-B
4417 LANCASTER PIKE
WILMINGTON, DE 19805

In re Application of ZHANG, Shi Hua ET AL U.S. Application No.: 13/143819 PCT No.: PCT/US10/20029 Int. Filing Date: 04 JANUARY 2010 Priority Date: 02 JANUARY 2009 For: PROCESS FOR EVALUATING CORROSION RESISTANCE OF COATING	:	DECISION ON PETITION

The petition to revive under 37 CFR 1.137(b) filed 12 July 2011, in the above-captioned application is hereby **GRANTED**.

Applicant states that the entire delay in filing the required reply from the due date was unintentional, as required by 37 CFR 1.137(b)(3). The appropriate petition fee has been submitted. A terminer disclaimer is not required as the application was filed on or after 08 June 1995. Accordingly, all requirements under 37 CFR 1.137(b) have been satisfied.

A review of the application file reveals that applicant has now provided payment of the full, U.S. Basic National Fee. Therefore, the request to revive the application abandoned under 35 U.S.C. 371(d) is granted as to the National stage in the United States of America.

This application is being forwarded to the United States Designated/Elected Office (US/DO/EO) for continued processing.

Richard Cole
PCT Legal Examiner
Office of PCT Legal Administration

Wanda Banks
Paralegal Specialist
Office of PCT Legal Administration
Tel: (571) 272-3277

PTO/SB/20PCT-JP (05-10)
Approved for use through 01/31/2012. OMB 0651-0058
U.S. Patent and Trademark Office; U.S. DEPARTMENT OF COMMERCE

Under the Paperwork Reduction Act of 1995, no persons are required to respond to a collection of information unless it displays a valid OMB control number.

REQUEST FOR PARTICIPATION IN THE PATENT COOPERATION TREATY - PATENT PROSECUTION HIGHWAY (PCT-PPH) PILOT PROGRAM BETWEEN THE JAPAN PATENT OFFICE (JPO) AND THE USPTO

Application No.:	13/143,859	Filing Date:	July 8, 2011
First Named Inventor:	Makoto IIDA et al.		
Attorney Docket No.:	150044		
Title of the Invention:	SINGLE-CRYSTAL MANUFACTURING METHOD		

THIS REQUEST FOR PARTICIPATION IN THE PCT-PPH PILOT PROGRAM ALONG WITH THE REQUIRED DOCUMENTS MUST BE SUBMITTED VIA EFS-WEB. INFORMATION REGARDING EFS-WEB IS AVAILABLE AT HTTP://WWW.USPTO.GOV/EBC/EFS_HELP.HTML.

APPLICANT HEREBY REQUESTS PARTICIPATION IN THE PCT-PPH PROGRAM AND PETITIONS TO MAKE THE ABOVE-IDENTIFIED APPLICATION SPECIAL UNDER THE PCT-PPH PROGRAM.

The above-identified application is (1) a national stage entry of the corresponding PCT application, or (2) a national stage entry of another PCT application which claims priority to the corresponding PCT application, or (3) a national application that claims domestic/ foreign priority to the corresponding PCT application, or (4) a national application which forms the basis for the priority claim in the corresponding PCT application, or (5) a continuing application of a U.S. application that satisfies one of (1) to (4) above, or (6) a U.S. application that claims domestic benefit to a U.S. provisional application which forms the basis for the priority claim in the corresponding PCT application.

The corresponding PCT application number(s) is/are: PCT/JP2009/006416

The international date of the corresponding PCT application(s) is/are: November 27, 2009

I. **List of Required Documents:**

a. **A copy of the latest international work product (WO/ISA, WO/IPEA, or IPER) in the above-identified corresponding PCT application(s)**

☒ Is attached.

☐ Is not attached because the document is already in the U.S. application.

b. **A copy of all claims which were indicated as having novelty, inventive step and industrial applicability in the above-identified corresponding PCT application(s).**

☒ Is attached.

☐ Is not attached because the document is already in the U.S. application.

c. **English translations of the documents in a. and b. above are attached (if the documents are not in the English language). A statement that the English translation is accurate is attached for the document in b. above.**

This collection of information is required by 35 U.S.C. 119, 37 CFR 1.55, and 37 CFR 1.102(d). The information is required to obtain or retain a benefit by the public, which is to file (and by the USPTO to process) an application. Confidentiality is governed by 35 U.S.C. 122 and 37 CFR 1.11 and 1.14. This collection is estimated to take 2 hours to complete, including gathering, preparing, and submitting the completed application form to the USPTO. Time will vary depending upon the individual case. Any comments on the amount of time you require to complete this form and/or suggestions for reducing this burden should be sent to the Chief Information Officer, U.S. Patent and Trademark Office, U.S. Department of Commerce, P.O. Box 1450, Alexandria, VA 22313-1450. DO NOT SEND FEES OR COMPLETED FORMS TO THIS ADDRESS.

Under the Paperwork Reduction Act of 1995, no persons are required to respond to a collection of information unless it displays a valid OMB control number.

REQUEST FOR PARTICIPATION IN THE PCT-PPH PILOT PROGRAM BETWEEN THE JPO AND THE USPTO

(continued)

Application No.:	13/143,859
First Named Inventor:	Makoto IIDA et al.

d. **(1) An information disclosure statement listing the documents cited in the international work products (ISR, WO/ISA, WO/IPEA, IPER) of the corresponding PCT application.**

☐ Is attached.

☒ Has already been filed in the above-identified U.S. application on July 8, 2011

(2) Copies of all documents (except) for U.S. patents or U.S. patent application publications)

☐ Are attached.

☒ Have already been filed in the above-identified U.S. application on July 8, 2011.

II. Claims Correspondence Table:

Claims in US Application	Patentable Claims in the corresponding PCT Application	Explanation regarding the correspondence
10	1	Claim 10 sufficiently corresponds to PCT claim 1.
11	2	Claim 11 sufficiently corresponds to PCT claim 2.
12 and 13	3	Claims 12 and 13 sufficiently correspond to PCT claim 3 but were amended to remove multiple dependencies.
14-17	4	Claims 14-17 sufficiently correspond to PCT claim 4 but were amended to remove multiple dependencies.
18-25	5	Claims 18-25 sufficiently correspond to PCT claim 5 but were amended to remove multiple dependencies.
26	6	Claim 26 sufficiently corresponds to PCT claim 6.
27	7	Claim 27 sufficiently corresponds to PCT claim 7.
28	8	Claim 28 sufficiently corresponds to PCT claim 8.
29	9	Claim 29 sufficiently corresponds to PCT claim 9.

III. All the claims in the US application sufficiently correspond to the patentable claims in the corresponding PCT application.

Signature /Jana Nelson/	Date February 8, 2012
Name (Print/Typed) William P. Berridge	Registration Number 30,024
Name (Print/Typed) Jana Nelson	Registration Number 66,070

OLIFF & BERRIDGE, PLC
P.O. Box 320850
Alexandria, Virginia 22320-4850
Telephone: (703) 836-6400

DEPOSIT ACCOUNT USE AUTHORIZATION
Please grant any extension necessary for entry of this filing;
Charge any fee due to our Deposit Account No. 15-0461

Privacy Act Statement

The **Privacy Act of 1974 (P.L. 93-579)** requires that you be given certain information in connection with your submission of the attached form related to a patent application or patent. Accordingly, pursuant to the requirements of the Act, please be advised that: (1) the general authority for the collection of this information is 35 U.S.C. 2(b)(2); (2) furnishing of the information solicited is voluntary; and (3) the principal purpose for which the information is used by the U.S. Patent and Trademark Office is to process and/or examine your submission related to a patent application or patent. If you do not furnish the requested information, the U.S. Patent and Trademark Office may not be able to process and/or examine your submission, which may result in termination of proceedings or abandonment of the application or expiration of the patent.

The information provided by you in this form will be subject to the following routine uses:

1. The information on this form will be treated confidentially to the extent allowed under the Freedom of Information Act (5 U.S.C. 552) and the Privacy Act (5 U.S.C 552a). Records from this system of records may be disclosed to the Department of Justice to determine whether disclosure of these records is required by the Freedom of Information Act.
2. A record from this system of records may be disclosed, as a routine use, in the course of presenting evidence to a court, magistrate, or administrative tribunal, including disclosures to opposing counsel in the course of settlement negotiations.
3. A record in this system of records may be disclosed, as a routine use, to a Member of Congress submitting a request involving an individual, to whom the record pertains, when the individual has requested assistance from the Member with respect to the subject matter of the record.
4. A record in this system of records may be disclosed, as a routine use, to a contractor of the Agency having need for the information in order to perform a contract. Recipients of information shall be required to comply with the requirements of the Privacy Act of 1974, as amended, pursuant to 5 U.S.C. 552a(m).
5. A record related to an International Application filed under the Patent Cooperation Treaty in this system of records may be disclosed, as a routine use, to the International Bureau of the World Intellectual Property Organization, pursuant to the Patent Cooperation Treaty.
6. A record in this system of records may be disclosed, as a routine use, to another federal agency for purposes of National Security review (35 U.S.C. 181) and for review pursuant to the Atomic Energy Act (42 U.S.C. 218(c)).
7. A record from this system of records may be disclosed, as a routine use, to the Administrator, General Services, or his/her designee, during an inspection of records conducted by GSA as part of that agency's responsibility to recommend improvements in records management practices and programs, under authority of 44 U.S.C. 2904 and 2906. Such disclosure shall be made in accordance with the GSA regulations governing inspection of records for this purpose, and any other relevant (*i.e.*, GSA or Commerce) directive. Such disclosure shall not be used to make determinations about individuals.
8. A record from this system of records may be disclosed, as a routine use, to the public after either publication of the application pursuant to 35 U.S.C. 122(b) or issuance of a patent pursuant to 35 U.S.C. 151. Further, a record may be disclosed, subject to the limitations of 37 CFR 1.14, as a routine use, to the public if the record was filed in an application which became abandoned or in which the proceedings were terminated and which application is referenced by either a published application, an application open to public inspection or an issued patent.
9. A record from this system of records may be disclosed, as a routine use, to a Federal, State, or local law enforcement agency, if the USPTO becomes aware of a violation or potential violation of law or regulation.

PATENT COOPERATION TREATY

PCT

INTERNATIONAL PRELIMINARY REPORT ON PATENTABILITY
(Chapter I of the Patent Cooperation Treaty)

(PCT Rule 44*bis*)

Applicant's or agent's file reference 09F00003WO	**FOR FURTHER ACTION**	See item 4 below
International application No. PCT/JP2009/006416	International filing date *(day/month/year)* 27 November 2009 (27.11.2009)	Priority date *(day/month/year)* 11 March 2009 (11.03.2009)
International Patent Classification (8th edition unless older edition indicated) See relevant information in Form PCT/ISA/237		
Applicant Shin-Etsu Handotai Co.,Ltd.		

1. This international preliminary report on patentability (Chapter I) is issued by the International Bureau on behalf of the International Searching Authority under Rule 44 *bis*.1(a).

2. This REPORT consists of a total of 4 sheets, including this cover sheet.

   In the attached sheets, any reference to the written opinion of the International Searching Authority should be read as a reference to the international preliminary report on patentability (Chapter I) instead.

3. This report contains indications relating to the following items:

☒	Box No. I	Basis of the report
☐	Box No. II	Priority
☐	Box No. III	Non-establishment of opinion with regard to novelty, inventive step and industrial applicability
☐	Box No. IV	Lack of unity of invention
☒	Box No. V	Reasoned statement under Article 35(2) with regard to novelty, inventive step or industrial applicability; citations and explanations supporting such statement
☐	Box No. VI	Certain documents cited
☐	Box No. VII	Certain defects in the international application
☐	Box No. VIII	Certain observations on the international application

4. The International Bureau will communicate this report to designated Offices in accordance with Rules 44*bis*.3(c) and 93*bis*.1 but not, except where the applicant makes an express request under Article 23(2), before the expiration of 30 months from the priority date (Rule 44*bis* .2).

	Date of issuance of this report 13 September 2011 (13.09.2011)
The International Bureau of WIPO 34, chemin des Colombettes 1211 Geneva 20, Switzerland Facsimile No. +41 22 338 82 70	Authorized officer Yukari Nakamura e-mail: pt07.pct@wipo.int

PATENT COOPERATION TREATY

TRANSLATION

From the
INTERNATIONAL SEARCHING AUTHORITY

To:

PCT

WRITTEN OPINION OF THE
INTERNATIONAL SEARCHING AUTHORITY

(PCT Rule 43*bis*.1)

Date of mailing *(day/month/year)*	16.02.2010
Applicant's or agent's file reference 09F00003WO	**FOR FURTHER ACTION** See paragraph 2 below

International application No.	International filing date *(day/month/year)*	Priority date *(day/month/year)*
PCT/JP2009/006416	27.11.2009	11.03.2009

International Patent Classification (IPC) or both national classification and IPC
C30B15/22(2006.01)i

Applicant
Shin-Etsu Handotai Co.,Ltd.

1. This opinion contains indications relating to the following items:

- [x] Box No. I — Basis of the opinion
- [ ] Box No. II — Priority
- [ ] Box No. III — Non-establishment of opinion with regard to novelty, inventive step and industrial applicability
- [ ] Box No. IV — Lack of unity of invention
- [x] Box No. V — Reasoned statement under Rule 43*bis*.1(a)(i) with regard to novelty, inventive step or industrial applicability; citations and explanations supporting such statement
- [ ] Box No. VI — Certain documents cited
- [ ] Box No. VII — Certain defects in the international application
- [ ] Box No. VIII — Certain observations on the international application

2. **FURTHER ACTION**

If a demand for international preliminary examination is made, this opinion will be considered to be a written opinion of the International Preliminary Examining Authority ("IPEA") except that this does not apply where the applicant chooses an Authority other than this one to be the IPEA and the chosen IPEA has notified the International Bureau under Rule 66.1*bis*(b) that written opinions of this International Searching Authority will not be so considered.

If this opinion is, as provided above, considered to be a written opinion of the IPEA, the applicant is invited to submit to the IPEA a written reply together, where appropriate, with amendments, before the expiration of 3 months from the date of mailing of Form PCT/ISA/220 or before the expiration of 22 months from the priority date, whichever expires later.

For further options, see Form PCT/ISA/220.

3. For further details, see notes to Form PCT/ISA/220.

Name and mailing address of the ISA/JP	Date of completion of this opinion	Authorized officer
Facsimile No.		Telephone No.

WRITTEN OPINION OF THE INTERNATIONAL SEARCHING AUTHORITY

International application No.
PCT/JP2009/006416

Box No. I **Basis of this opinion**

1. With regard to the **language**, this opinion has been established on the basis of:

   ☒ the international application in the language in which it was filed

   ☐ a translation of the international application into _____ , which is the language of a translation furnished for the purposes of international search (Rules 12.3(a) and 23.1(b)).

2. ☐ This opinion has been established taking into account the **rectification of an obvious mistake** authorized by or notified to this Authority under Rule 91 (Rule 43*bis*.1(a))

3. With regard to any **nucleotide and/or amino acid sequence** disclosed in the international application and necessary to the claimed invention, this opinion has been established on the basis of:

   a. type of material

   ☐ a sequence listing

   ☐ table(s) related to the sequence listing

   b. format of material

   ☐ on paper

   ☐ in electronic form

   c. time of filing/furnishing

   ☐ contained in the international application as filed

   ☐ filed together with the international application in electronic form

   ☐ furnished subsequently to this Authority for the purposes of search

4. ☐ In addition, in the case that more than one version or copy of a sequence listing and/or table(s) relating thereto has been filed or furnished, the required statements that the information in the subsequent or additional copies is identical to that in the application as filed or does not go beyond the application as filed, as appropriate, were furnished.

5. Additional comments:

WRITTEN OPINION OF THE INTERNATIONAL SEARCHING AUTHORITY

International application No.
PCT/JP2009/006416

Box No. V **Reasoned statement under Rule 43bis.1(a)(i) with regard to novelty, inventive step or industrial applicability; citations and explanations supporting such statement**

1. Statement

Novelty (N)	Claims	1-9	YES
	Claims		NO
Inventive step (IS)	Claims	1-9	YES
	Claims		NO
Industrial applicability (IA)	Claims	1-9	YES
	Claims		NO

2. Citations and explanations:

Document 1: JP 2002-012494 A (Shin-Etsu Handotai Co., Ltd.), 15 January 2002

Document 2: JP 2004-175620 A (Shin-Etsu Handotai Co., Ltd.), 24 June 2004

Document 3: JP 2008-247737 A (Shin-Etsu Handotai Co., Ltd.), 16 October 2008

Document 4: JP 06-279172 A (Research Development Corp. of Japan), 04 October 1994

Document 5: JP 07-025695 A (Research Development Corp. of Japan), 27 January 1995

Document 6: JP 2002-326888 A (Shin-Etsu Handotai Co., Ltd.), 12 November 2002

Document 7: JP 2004-262723 A (Dowa Mining Co., Ltd.), 24 September 2004

The invention as in claims 1-9 is novel and involves an inventive step in relation to documents 1-7 cited in the ISR. Documents 1-7 do not disclose an aging step wherein a heater and a crucible are relatively and vertically moved, and even a person skilled in the art could not easily conceive of this feature.

特許協力条約

発信人　日本国特許庁（国際調査機関）

代理人
好宮幹夫

様

あて名
〒110-0005
日本国東京都台東区上野７丁目６番１１号第一下谷ビル８Ｆ

ＰＣＴ
国際調査機関の見解書
（法施行規則第40条の2）
〔ＰＣＴ規則43の2.1〕

発送日 （日.月.年）	１６．０２．２０１０
出願人又は代理人 の書類記号　09F00003W0	今後の手続きについては、下記２を参照すること。

国際出願番号	国際出願日	優先日
ＰＣＴ／ＪＰ２００９／００６４１６	（日.月.年）　２７．１１．２００９	（日.月.年）　１１．０３．２００９

国際特許分類（ＩＰＣ）Int.Cl. C30B15/22(2006.01)i

出願人（氏名又は名称）
信越半導体株式会社

１．この見解書は次の内容を含む。

- ☑ 第Ｉ欄　見解の基礎
- ☐ 第Ⅱ欄　優先権
- ☐ 第Ⅲ欄　新規性、進歩性又は産業上の利用可能性についての見解の不作成
- ☐ 第Ⅳ欄　発明の単一性の欠如
- ☑ 第Ⅴ欄　ＰＣＴ規則43の2.1(a)(i)に規定する新規性、進歩性又は産業上の利用可能性についての見解、それを裏付けるための文献及び説明
- ☐ 第Ⅵ欄　ある種の引用文献
- ☐ 第Ⅶ欄　国際出願の不備
- ☐ 第Ⅷ欄　国際出願に対する意見

２．今後の手続き
国際予備審査の請求がされた場合は、出願人がこの国際調査機関とは異なる国際予備審査機関を選択し、かつ、その国際予備審査機関がＰＣＴ規則66.1の2(b)の規定に基づいて国際調査機関の見解書を国際予備審査機関の見解書とみなさない旨を国際事務局に通知していた場合を除いて、この見解書は国際予備審査機関の最初の見解書とみなされる。

この見解書が上記のように国際予備審査機関の見解書とみなされる場合、様式ＰＣＴ／ＩＳＡ／２２０を送付した日から３月又は優先日から２２月のうちいずれか遅く満了する期限が経過するまでに、出願人は国際予備審査機関に、適当な場合は補正書とともに、答弁書を提出することができる。

さらなる選択肢は、様式ＰＣＴ／ＩＳＡ／２２０を参照すること。

３．さらなる詳細は、様式ＰＣＴ／ＩＳＡ／２２０の備考を参照すること。

見解書を作成した日
０５．０２．２０１０

名称及びあて先 日本国特許庁（ＩＳＡ／ＪＰ） 郵便番号１００－８９１５ 東京都千代田区霞が関三丁目４番３号	特許庁審査官（権限のある職員） 中村　善子 電話番号　０３－３５８１－１１０１　内線　３４１６	４Ｇ	４１４１

様式ＰＣＴ／ＩＳＡ／２３７（表紙）（２００７年４月）

国際調査機関の見解書

国際出願番号　ＰＣＴ／ＪＰ２００９／００６４１６

第Ｉ欄　見解の基礎

１．言語に関し、この見解書は以下のものに基づき作成した。

☑ 出願時の言語による国際出願

☐ 出願時の言語から国際調査のための言語である ＿＿＿＿＿＿ 語に翻訳された、この国際出願の翻訳文（ＰＣＴ規則12.3(a)及び23.1(b)）

２．☐ この見解書は、ＰＣＴ規則 91 の規定により国際調査機関が認めた又は国際調査機関に通知された明らかな誤りの訂正を考慮して作成した（ＰＣＴ規則 43 の 2.1(b)）。

３．この国際出願で開示されたヌクレオチド又はアミノ酸配列に関して、以下に基づき見解書を作成した。

ａ．タイプ　☐ 配列表

☐ 配列表に関連するテーブル

ｂ．フォーマット　☐ 紙形式

☐ 電子形式

ｃ．提出時期　☐ 出願時の国際出願に含まれていたもの

☐ この国際出願と共に電子形式により提出されたもの

☐ 出願後に、調査のために、この国際調査機関に提出されたもの

４．☐ さらに、配列表又は配列表に関連するテーブルを提出した場合に、出願後に提出した配列若しくは追加して提出した配列が出願時に提出した配列と同一である旨、又は、出願時の開示を超える事項を含まない旨の陳述書の提出があった。

５．補足意見：

国際調査機関の見解書

国際出願番号　ＰＣＴ／ＪＰ２００９／００６４１６

第Ｖ欄　新規性、進歩性又は産業上の利用可能性についてのＰＣＴ規則43の2.1(a)(i)に定める見解、それを裏付ける文献及び説明

1.　見解

新規性（N）	請求項	1-9	有
	請求項		無
進歩性（ＩＳ）	請求項	1-9	有
	請求項		無
産業上の利用可能性（ＩＡ）	請求項	1-9	有
	請求項		無

2.　文献及び説明

文献1: JP 2002-012494 A（信越半導体株式会社）2002.01.15
文献2: JP 2004-175620 A（信越半導体株式会社）2004.06.24
文献3:JP 2008-247737 A（信越半導体株式会社）2008.10.16
文献4:JP 06-279172 A（新技術事業団）1994.10.04
文献5: JP 07-025695 A（新技術事業団）1995.01.27
文献6: JP 2002-326888 A（信越半導体株式会社）2002.11.12
文献7: JP 2004-262723 A（同和鉱業株式会社）2004.09.24

請求項1-9に係る発明は、国際調査報告で引用された文献1-7に対して新規性及び進歩性を有する。文献1-7には、熟成工程においてヒーターとルツボを相対的に上下動させることは記載されておらず、しかもその点は当業者といえども容易に想到し得ないものである。

From the INTERNATIONAL BUREAU

PCT

NOTIFICATION CONCERNING TRANSMITTAL OF COPY OF INTERNATIONAL PRELIMINARY REPORT ON PATENTABILITY (CHAPTER I OF THE PATENT COOPERATION TREATY)
(PCT Rule 44bis.1(c))

To:

YOSHIMIYA, Mikio
1st Shitaya Bldg, 8F, 6-11, Ueno 7-chome, Taito-ku,
Tokyo
1100005
JAPON

Date of mailing *(day/month/year)*
22 September 2011 (22.09.2011)

Applicant's or agent's file reference
09F00003WO

IMPORTANT NOTICE

International application No.	International filing date *(day/month/year)*	Priority date *(day/month/year)*
PCT/JP2009/006416	27 November 2009 (27.11.2009)	11 March 2009 (11.03.2009)

Applicant
Shin-Etsu Handotai Co.,Ltd. et al

The International Bureau transmits herewith a copy of the international preliminary report on patentability (Chapter I of the Patent Cooperation Treaty)

The International Bureau of WIPO
34, chemin des Colombettes
1211 Geneva 20, Switzerland

Facsimile No. +41 22 338 82 70

Authorized officer
Yukari Nakamura

e-mail: pt07.pct@wipo.int

請求の範囲

[請求項1] 少なくとも、結晶原料をルツボ内でヒーターにより加熱溶融して溶融液を生成する工程と、該溶融液を高温に維持して熟成させる工程と、該熟成後の溶融液に種結晶を浸漬して単結晶を育成する工程とを含む、チョクラルスキー法により単結晶を製造する方法であって、

前記熟成工程において、前記ヒーターと前記ルツボを相対的に上下動させることを特徴とする単結晶の製造方法。

[請求項2] 前記熟成工程におけるヒーターパワーを、前記熟成工程開始時は、前記単結晶を育成する工程の開始時より大きく、前記溶融液を生成する工程の時と同じか小さい値とし、前記熟成工程終了時は、前記溶融液を生成する工程より小さく、前記単結晶を育成する工程の開始時と同じか大きい値とすることを特徴とする請求項１に記載の単結晶の製造方法。

[請求項3] 前記熟成工程において、前記溶融液を２時間以上熟成させることを特徴とする請求項１又は請求項２に記載の単結晶の製造方法。

[請求項4] 前記熟成工程において、前記ヒーターと前記ルツボを相対的に２ｍｍ／ｍｉｎ以下の速さで上下動させることを特徴とする請求項１乃至請求項３のいずれか一項に記載の単結晶の製造方法。

[請求項5] 前記熟成工程において、前記ヒーターと前記ルツボを相対的に１０ｃｍ以上の幅で上下動させることを特徴とする請求項１乃至請求項４のいずれか一項に記載の単結晶の製造方法。

[請求項6] 前記熟成工程において、前記ヒーターのヒータースリット下端の移動下限位置が、前記ルツボ内の溶融液の最下端から５ｃｍ上より下の

位置になるように、前記ヒーターと前記ルツボを相対的に上下動させることを特徴とする請求項１乃至請求項５のいずれか一項に記載の単結晶の製造方法。

[請求項7] 前記熟成工程において、前記ルツボ内の溶融液に磁場を印加することを特徴とする請求項１乃至請求項６のいずれか一項に記載の単結晶の製造方法。

[請求項8] 前記熟成工程において、前記ヒーターと前記ルツボの相対的な上下動の移動、及び／又は、前記ヒーターパワーを自動で調節して、前記ヒーターと前記ルツボの熟成工程における最終位置を、前記単結晶を育成する工程における結晶育成開始位置とし、前記ヒーターパワーを育成開始時の値になるように調節することを特徴とする請求項１乃至請求項７のいずれか一項に記載の単結晶の製造方法。

[請求項9] 前記ルツボの直径を、３２インチ（８１ｃｍ）以上にすることを特徴とする請求項１乃至請求項８のいずれか一項に記載の単結晶の製造方法。

CLAIMS

1. A single-crystal manufacturing method based on the Czochralski method, comprising at least the steps of:

producing a melt by heating and melting a crystalline raw material in a crucible with a heater;

maturing the melt by keeping the melt at a high temperature; and

growing a single crystal after dipping a seed crystal into the matured melt, wherein

the heater and the crucible are relatively moved up and down in the step of maturing.

2. The single-crystal manufacturing method according to claim 1, wherein heater power at the start of the step of maturing is higher than that at the start of the step of growing the single crystal and is equal to or lower than that of the step of producing the melt, and the heater power at the end of the step of maturing is lower than that of the step of producing the melt and is equal to or higher than that at the start of the step of growing the single crystal.

3. The single-crystal manufacturing method according to claim 1 or claim 2, wherein, in the step of maturing, the melt is matured for 2 hours or more.

4. The single-crystal manufacturing method according to any one of claims 1 to 3, wherein, in the step of maturing, the heater and the crucible are relatively moved up and down at a speed of 2 mm/min or less.

5. The single-crystal manufacturing method according

to any one of claims 1 to 4, wherein, in the step of maturing, the heater and the crucible are relatively moved up and down with a width of 10 cm or more.

6. The single-crystal manufacturing method according to any one of claims 1 to 5, wherein, in the step of maturing, the heater and the crucible are relatively moved up and down so that a lower limit position of movement of a lower end of each heater slit of the heater is below a position of 5 cm higher than a lowermost end of the melt in the crucible.

7. The single-crystal manufacturing method according to any one of claims 1 to 6, wherein, in the step of maturing, a magnetic field is applied to the melt in the crucible.

8. The single-crystal manufacturing method according to any one of claims 1 to 7, wherein, in the step of maturing, final positions of the heater and the crucible in the step of maturing are adjusted to the same as a crystal growth start position in the step of growing the single crystal, and the heater power is adjusted to the same as that at the start of the growing, by means of automatically adjusting the relative up and down movement of the heater and the crucible and/or the heater power.

9. The single-crystal manufacturing method according to any one of claims 1 to 8, wherein a diameter of the crucible is 32 inches (81 cm) or more.

UNITED STATES PATENT AND TRADEMARK OFFICE

Commissioner for Patents
United States Patent and Trademark Office
P.O. Box 1450
Alexandria, VA 22313-1450
www.uspto.gov

OLIFF & BERRIDGE, PLC
P.O. BOX 320850
ALEXANDRIA, VA 22320-4850

MAILED
MAR 27 2012
OFFICE OF PETITIONS

In re Application of
Makoto Iida, et. al.
Application No.: 13/143,859
Filed: July 8, 2011
Attorney Docket No.: 150044
For: SINGLE-CRYSTAL MANUFACTURING METHOD

: DECISION ON REQUEST TO PARTICIPATE IN THE PATENT PROSECUTION HIGHWAY PROGRAM AND PETITION TO MAKE SPECIAL UNDER 37 CFR 1.102(a)

This is a decision on the request to participate in the PCT Patent Prosecution Highway (PCT-PPH) pilot program and the petition under 37 CFR 1.102(a), filed on February 8, 2012, to make the above-identified application special.

The request and petition are **GRANTED**.

Discussion

A grantable request to participate in the PCT-PPH pilot program and petition to make special require:

(1) The U.S. application must have an eligible relationship to one or more PCT applications where the ISA or IPEA are the Australia, Austria, EPO, Finland, JPO, KIPO, NPI, NBPR, Spain, Russia, Sweden, USPTO, or CHINA;

(2) At least one claim in the PCT application has novelty, inventive step, and industrial applicability and must be free of any observations in Box VIII in the latest work product in the international stage or applicant must identify and explain why the claim(s) is/are not subject to the observation in Box VIII;

(3) Applicant must submit a copy of the claim(s) from the PCT application(s) that have novelty, inventive step, and industrial applicability along with an English translation thereof and a statement that the English translation is accurate, if the claims are not in the English language;

(4) All the claims in the U.S. application must sufficiently correspond or be amended to sufficiently correspond to the claim(s) that have novelty, inventive step, and industrial applicability in the PCT application(s);

(5) Examination of the U.S. application has not begun;

(6) Applicant must submit a copy of the latest international work product from the PCT application indicating that the claim(s) have novelty, inventive step, and industrial applicability along with an English translation thereof and a statement that the English translation is accurate if the latest international work product is not in the English language;

(7) Applicant must submit an IDS listing the documents cited by the PCT examiner in the international work product along with copies of documents except U.S. patents or U.S. patent application publications.

The request to participate in the PCT-PPH pilot program and petition comply with the above requirements. Accordingly, the above-identified application has been accorded "special" status.

Telephone inquiries concerning this decision should be directed to the undersigned at (571) 272-3226. All other inquiries concerning the examination or status of the application is accessible in the PAIR system at http://www.uspto.gov/ebc.index.html.

This application will be forwarded to the examiner for action on the merits commensurate with this decision.

/Andrea Smith/
Andrea Smith
Petitions Examiner
Office of Petitions

UNITED STATES PATENT AND TRADEMARK OFFICE

UNITED STATES DEPARTMENT OF COMMERCE
United States Patent and Trademark Office
Address: COMMISSIONER FOR PATENTS
P.O. Box 1450
Alexandria, Virginia 22313-1450
www.uspto.gov

APPLICATION NO.	FILING DATE	FIRST NAMED INVENTOR	ATTORNEY DOCKET NO.	CONFIRMATION NO.
13/143,877	07/08/2011	Shunsuke Yasui	083710-0095	9874

53080 7590 09/13/2011
MCDERMOTT WILL & EMERY LLP
600 13TH STREET, NW
WASHINGTON, DC 20005-3096

EXAMINER
PARSONS, THOMAS H

ART UNIT	PAPER NUMBER
1729	

NOTIFICATION DATE	DELIVERY MODE
09/13/2011	ELECTRONIC

Please find below and/or attached an Office communication concerning this application or proceeding.

The time period for reply, if any, is set in the attached communication.

Notice of the Office communication was sent electronically on above-indicated "Notification Date" to the following e-mail address(es):

mweipdocket@mwe.com

UNITED STATES PATENT AND TRADEMARK OFFICE

Commissioner for Patents
United States Patent and Trademark Office
P.O. Box 1450
Alexandria, VA 22313-1450
www.uspto.gov

SEP 13 2011

WG

In re application of	:	DECISION ON REQUEST TO
Shunsuke Yasui et al.	:	PARTICIPATE IN PATENT
Serial No. 13/143,877	:	PROSECUTION HIGHWAY
Filed: July 8, 2011	:	PROGRAM AND
For: BATTERY MODULE AND BATTERY	:	PETITION TO MAKE SPECIAL
MODULE ASSEMBLY USING SAME	:	UNDER 37 CFR 1.102(a)

This is a decision on the request to participate in the PCT Patent Prosecution Highway (PCT-PPH) pilot program and the petition under 37 CFR 1.102(a), filed July 29, 2011, to make the above-identified application special.

The request and petition are **DISMISSED**.

A grantable request to participate in the PCT-PPH pilot program and petition to make special require:

(1) The U.S. application must disclose an eligible relationship to one or more PCT applications where the ISA or IPEA are the JPO, EPO, KIPO or USPTO;

(2) At least one claim in the PCT application has novelty, inventive step, and industrial applicability and must be free of any observations in Box VIII in the latest work product in the international stage or applicant must identify and explain why the claim(s) is/are not subject to the observation in Box VIII;

(3) Applicant must submit a copy of the claim(s) from the PCT application(s) that have novelty, inventive step, and industrial applicability along with an English translation thereof and a statement that the English translation is accurate, if the claims are not in the English language;

(4) All the claims in the U.S. application must sufficiently correspond or be amended to sufficiently correspond to the claim(s) that have novelty, inventive step, and industrial applicability in the PCT application(s);

(5) Examination of the U.S. application has not begun;

(6) Applicant must submit a copy of the latest international work product from the PCT application indicating that the claim(s) have novelty, inventive step, and industrial

applicability along with an English translation thereof if the latest international work product is not in the English language; and

(7) Applicant must submit an IDS listing the documents cited by the PCT examiner in the international work product along with copies of documents except U.S. patents or U.S. patent application publications.

The request to participate in the PPH program and petition fail because all of the claims in the U.S. application do not sufficiently correspond or have not been amended to sufficiently correspond to the claims that have novelty, inventive step, and industrial applicability in the PCT applications. Specifically, claim 5 in the PCT application was found to have novelty, inventive step, and industrial applicability. However, claim 1 of the US application does not correspond to claim 5 as alleged because claim 1 does not include the limitation that the outer film of the heat-adsorbing member has a laminated structure composed of a metal film and resin layers formed on both surfaces of the metal film.

Applicant is given a time period of **ONE MONTH OR THIRTY DAYS**, whichever is longer, from the mailing date of this decision to correct the deficiencies. **NO EXTENSION OF TIME UNDER 37 CFR 1.136 IS PERMITTED.** If the deficiencies are not corrected within the time period given, the application will await action in its regular turn.

Any inquiry regarding this decision should be directed to Walter D. Griffin, Supervisory Patent Examiner, at (571) 272-1447.

All other inquiries concerning the examination or status of the application is accessible in the PAIR system at http://www.uspto.gov/ebc/index.html.

/Walter D. Griffin/

Walter D. Griffin
Supervisory Patent Examiner
Technology Center 1700

UNITED STATES PATENT AND TRADEMARK OFFICE

Commissioner for Patents
United States Patent and Trademark Office
P.O. Box 1450
Alexandria, VA 22313-1450
www.uspto.gov

MAILED

SEP 12 2011

PCT LEGAL ADMINISTRATION

RADER, FISHMAN & GRAUER PLLC
39533 WOODWARD AVENUE
SUITE 140
BLOOMFIELD HILLS MI 48304-0610

In re Application of
ALBERTS, John J., III, et al.
Application No.: 13/143,890
PCT No.: PCT/US2008/056378
Int. Filing Date: 10 March 2008
Priority Date: None
Att. Docket No.: 68001-1067
For: INTEGRATED PUMP PRIMING SYSTEM

DECISION

Applicant's petition under 37 CFR 1.137(b), filed in the United States Patent and Trademark Office on 08 July 2011, is **GRANTED**.

Applicant states that the entire delay in filing the required reply from the due date for the required reply until the filing of a grantable petition under 37 CFR 1.137(b) was unintentional, as required by 37 CFR 1.137(b)(3). The appropriate national fee and petition fee have been submitted. A terminal disclaimer is not required as the application was filed on or after 08 June 1995. Accordingly, all requirements under 37 CFR 1.137(b) have been satisfied.

The surcharge for filing the search fee, examination fee or oath or declaration after thirty months will be charged to deposit account no. 18-0013, as authorized.

This application is being referred to the National Stage Processing Branch of the Office of Patent Application Processing for continued processing in accordance with this decision.

/Erin P. Thomson/

Erin P. Thomson
Attorney Advisor
PCT Legal Administration

Telephone: 571-272-3292

UNITED STATES PATENT AND TRADEMARK OFFICE

UNITED STATES DEPARTMENT OF COMMERCE
United States Patent and Trademark Office
Address: COMMISSIONER FOR PATENTS
P.O. Box 1450
Alexandria, Virginia 22313-1450
www.uspto.gov

APPLICATION NO.	FILING DATE	FIRST NAMED INVENTOR	ATTORNEY DOCKET NO.	CONFIRMATION NO.
13/143,892	07/08/2011	Andreas Dann	18805.12	1093

22913 7590 10/14/2011
Workman Nydegger
1000 Eagle Gate Tower
60 East South Temple
Salt Lake City, UT 84111

EXAMINER
PARSLEY, DAVID J

ART UNIT	PAPER NUMBER
3643	

MAIL DATE	DELIVERY MODE
10/14/2011	PAPER

Please find below and/or attached an Office communication concerning this application or proceeding.

The time period for reply, if any, is set in the attached communication.

UNITED STATES PATENT AND TRADEMARK OFFICE

Commissioner for Patents
United States Patent and Trademark Office
P.O. Box 1450
Alexandria, VA 22313-1450
www.uspto.gov

OCT 14 2011

Workman Nydegger
1000 Eagle Gate Tower
60 East South Temple
Salt Lake City UT 84111

In re application of Dann et al Application No. 13/143892 Filed: July 08, 2011 For: FISH TRANSPORTING DEVICE FOR AUTOMATICALLY FEEDING FISH TO A FISH PROCESSING MACHINE AND DEVICE FOR ALIGNING FISH IN A HEAD/TAIL ORIENTATION HAVING SUCH FISH TRANSPORTING DEVICE	**DECISION ON REQUEST TO PARTICIPATE IN PATENT PROSECUTION HIGHWAY PROGRAM AND PETITION TO MAKE SPECIAL UNDER 37 CFR 1.102(a)**

This is a decision on the renewed request to participate in the Patent Prosecution Highway (PPH) program and the petition under 37 CFR 1.102(a), filed July 8, 2011, to make the above-identified application special.

The request and petition are **DISMISSED as MOOT.**

A grantable request to participate in the PPH pilot program and petition to make special require:

(1) The U.S. application must validly claim priority under 35 U.S.C. 119(a) to one or more applications filed in the DPMA;
(2) Applicant must submit a copy of the allowable/patentable claim(s) from the DPMA, application(s) along with an English translation thereof and a statement that the English translation is accurate;
(3) All the claims in the U.S. application must sufficiently correspond or be amended to sufficiently correspond to the allowable/patentable claim(s) in the DPMA application(s);
(4) Examination of the U.S. application has not begun;
(5) Applicant must submit a copy of the latest Office action from each of the DPMA application(s) containing the allowable/patentable claim(s) along with an English translation thereof and a statement that the English translation is accurate;
(6) Applicant must submit an IDS listing the documents cited by the DPMA examiner in the DPMA Office action along with copies of documents except U.S. patents or U.S. patent application publications.

The request to participate in the PPH pilot is not grantable as per item (4) above in that Examination of the U.S. application has already begun. A Non Final Office action was mailed on October 12, 2011.

No time period for reply to this decision is available since an Office action on the merits has already been mailed.

Any inquiry regarding this decision should be directed to Mikado Buiz, Quality Assurance Specialist, at (571) 272-6578.

/ Mikado Buiz /

Mikado Buiz,
Quality Assurance Specialist
Technology Center 3600

MB/MB: 10/14/11

UNITED STATES PATENT AND TRADEMARK OFFICE

Commissioner for Patents
United States Patent and Trademark Office
P.O. Box 1450
Alexandria, VA 22313-1450
www.uspto.gov

Matthias Scholl
14781 Memorial Drive
Suite 1319
Houston, TX 77079

MAILED
SEP 01 2011
PCT LEGAL ADMINISTRATION

In re Application of :
PENG :
Application No.: 13/143,952 :
PCT No.: PCT/CN2009/070078 :
Int. Filing Date: 08 January 2009 :
Priority Date: None :
Attorney Docket No.: SZPJ-00103-NUS :
For: AIR CURRENT GENERATING SYSTEM AND METHOD

DECISION ON PETITION
UNDER 37 CFR 1.137(b)

The petition to revive under 37 CFR 1.137(b) filed 11 July 2011 in the above-captioned application is hereby GRANTED as follows:

Applicants' statement that "the entire delay in filing the required reply from the due date for the reply until the filing of a grantable petition under 37 CFR 1.137(b) was unintentional" meets the requirements of 37 CFR 1.137(b)(3).

A review of the application file reveals that applicants have submitted the basic national fee and the requirements of 37 CFR 1.137(b) have been satisfied. Therefore, the request to revive the application abandoned under 35 U.S.C. 371(d) is granted as to the National stage in the United States of America.

This application is being forwarded to the United States Designated/Elected Office (US/DO/EO) for continued processing in accordance with this decision.

Anthony Smith
Attorney-Advisor
Office of PCT Legal Administration
Telephone: (571) 272-3298
Facsimile: (571) 273-0459

PTO/SB/20PCT-JP (05-10)
Approved for use through 01/31/2012. OMB 0651-0058
U.S. Patent and Trademark Office; U. S. DEPARTMENT OF COMMERCE
Under the Paperwork Reduction Act of 1995, no persons are required to respond to a collection of information unless it displays a valid OMB control number.

REQUEST FOR PARTICIPATION IN THE PATENT COOPERATION TREATY - PATENT PROSECUTION HIGHWAY (PCT-PPH) PILOT PROGRAM BETWEEN THE JAPAN PATENT OFFICE (JPO) AND THE USPTO

Application No:	13143965	Filing date:	July 11, 2011
First Named Inventor:	K. HIROSE et al.		
Title of the Invention:	CHARGED PARTICLE RADIATION DEVICE PROVIDED WITH ABERRATION CORRECTOR		

THIS REQUEST FOR PARTICIPATION IN THE PCT-PPH PILOT PROGRAM ALONG WITH THE REQUIRED DOCUMENTS MUST BE SUBMITTED VIA EFS-WEB. INFORMATION REGARDING EFS-WEB IS AVAILABLE AT HTTP://WWW.USPTO.GOV/EBC/EFS_HELP.HTML

APPLICANT HEREBY REQUESTS PARTICIPATION IN THE PCT-PPH PROGRAM AND PETITIONS TO MAKE THE ABOVE-IDENTIFIED APPLICATION SPECIAL UNDER THE PCT-PPH PROGRAM.

The above-identified application is (1) a national stage entry of the corresponding PCT application, or (2) a national stage entry of another PCT application which claims priority to the corresponding PCT application, or (3) a national application that claims domestic/ foreign priority to the corresponding PCT application, or (4) a national application which forms the basis for the priority claim in the corresponding PCT application, or (5) a continuing application of a U.S. application that satisfies one of (1) to (4) above, or (6) a U.S. application that claims domestic benefit to a U.S. provisional application which forms the basis for the priority claim in the corresponding PCT application.

The corresponding PCT application number(s) is/are: PCT/JP2010/000173

The international date of the corresponding PCT application(s) is/are: 2010-01-14

I. List of Required Documents:

a. **A copy of the latest international work product (WO/ISA, WO/IPEA, or IPER) in the above–identified corresponding PCT application(s)**

☑ Is attached.

☐ Is not attached because the document is already in the U.S. application.

b. **A copy of all claims which were indicated as having novelty, inventive step and industrial applicability in the above-identified corresponding PCT application(s).**

☑ Is attached.

☐ Is not attached because the document is already in the U.S. application.

c. **English translations of the documents in a. and b. above are attached (if the documents are not in the English language). A statement that the English translation is accurate is attached for the document in b. above.**

This collection of information is required by 35 U.S.C. 119, 37 CFR 1.55, and 37 CFR 1.102(d). The information is required to obtain or retain a benefit by the public, which is to file (and by the USPTO to process) an application. Confidentiality is governed by 35 U.S.C. 122 and 37 CFR 1.11 and 1.14. This collection is estimated to take 2 hours to complete, including gathering, preparing, and submitting the completed application form to the USPTO. Time will vary depending upon the individual case. Any comments on the amount of time you require to complete this form and/or suggestions for reducing this burden should be sent to the Chief Information Officer, U.S. Patent and Trademark Office, U.S. Department of Commerce, P.O. Box 1450, Alexandria, VA 22313-1450. DO NOT SEND FEES OR COMPLETED FORMS TO THIS ADDRESS.

Approved for use through 01/31/2012. OMB 0651-0058
U.S.Patent and Trademark Office; U.S. DEPARTMENT OF COMMERCE

Under the Paperwork Reduction Act of 1995, no persons are required to respond to a collection of information unless it displays a valid OMB control number.

REQUEST FOR PARTICIPATION IN THE PCT-PPH PILOT PROGRAM BETWEEN THE JPO AND THE USPTO

(continued)

Application No.:	13143965
First Named Inventor:	HIROSE

d. **(1) An information disclosure statement listing the documents cited in the international work products (ISR, WO/ISA, WO/IPEA, IPER) of the corresponding PCT application.**

☑ Is attached

☐ Has already been filed in the above-identified U.S. application on _____

(2) Copies of all documents (except) for U.S. patents or U.S. patent application publications)

☑ Are attached.

☐ Have already been filed in the above-identified U.S. application on _____

II. Claims Correspondence Table:

Claims in US Application	Patentable Claims in the corresponding PCT Application	Explanation regarding the correspondence
1-17	1-17	identical
18	18	A part of written form of "an image-capturing part --obtained by measurement," is corrected
19-20	19-20	identical

III. All the claims in the US application sufficiently correspond to the patentable claims in the corresponding PCT application.

Signature /JOHN R. MATTINGLY/	Date 2011-07-25
Name (Print/Typed) JOHN R. MATTINGLY	Registration Number 30293

Privacy Act Statement

The **Privacy Act of 1974 (P.L. 93-579)** requires that you be given certain information in connection with your submission of the attached form related to a patent application or patent. Accordingly, pursuant to the requirements of the Act, please be advised that: (1) the general authority for the collection of this information is 35 U.S.C. 2(b)(2); (2) furnishing of the information solicited is voluntary; and (3) the principal purpose for which the information is used by the U.S. Patent and Trademark Office is to process and/or examine your submission related to a patent application or patent. If you do not furnish the requested information, the U.S. Patent and Trademark Office may not be able to process and/or examine your submission, which may result in termination of proceedings or abandonment of the application or expiration of the patent.

The information provided by you in this form will be subject to the following routine uses:

1. The information on this form will be treated confidentially to the extent allowed under the Freedom of Information Act (5 U.S.C. 552) and the Privacy Act (5 U.S.C 552a). Records from this system of records may be disclosed to the Department of Justice to determine whether disclosure of these records is required by the Freedom of Information Act.
2. A record from this system of records may be disclosed, as a routine use, in the course of presenting evidence to a court, magistrate, or administrative tribunal, including disclosures to opposing counsel in the course of settlement negotiations.
3. A record in this system of records may be disclosed, as a routine use, to a Member of Congress submitting a request involving an individual, to whom the record pertains, when the individual has requested assistance from the Member with respect to the subject matter of the record.
4. A record in this system of records may be disclosed, as a routine use, to a contractor of the Agency having need for the information in order to perform a contract. Recipients of information shall be required to comply with the requirements of the Privacy Act of 1974, as amended, pursuant to 5 U.S.C. 552a(m).
5. A record related to an International Application filed under the Patent Cooperation Treaty in this system of records may be disclosed, as a routine use, to the International Bureau of the World Intellectual Property Organization, pursuant to the Patent Cooperation Treaty.
6. A record in this system of records may be disclosed, as a routine use, to another federal agency for purposes of National Security review (35 U.S.C. 181) and for review pursuant to the Atomic Energy Act (42 U.S.C. 218(c)).
7. A record from this system of records may be disclosed, as a routine use, to the Administrator, General Services, or his/her designee, during an inspection of records conducted by GSA as part of that agency's responsibility to recommend improvements in records management practices and programs, under authority of 44 U.S.C. 2904 and 2906. Such disclosure shall be made in accordance with the GSA regulations governing inspection of records for this purpose, and any other relevant (*i.e.*, GSA or Commerce) directive. Such disclosure shall not be used to make determinations about individuals.
8. A record from this system of records may be disclosed, as a routine use, to the public after either publication of the application pursuant to 35 U.S.C. 122(b) or issuance of a patent pursuant to 35 U.S.C. 151. Further, a record may be disclosed, subject to the limitations of 37 CFR 1.14, as a routine use, to the public if the record was filed in an application which became abandoned or in which the proceedings were terminated and which application is referenced by either a published application, an application open to public inspection or an issued patent.
9. A record from this system of records may be disclosed, as a routine use, to a Federal, State, or local law enforcement agency, if the USPTO becomes aware of a violation or potential violation of law or regulation.

PCT INTERNATIONAL SEARCH REPORT

国際調査報告

国際出願番号　ＰＣＴ／ＪＰ２０１０／０００１７３

Ａ．　発明の属する分野の分類（国際特許分類（ＩＰＣ））

Int.Cl.　H01J37/22(2006.01)i, H01J37/153(2006.01)i, H01J37/21(2006.01)i

Ｂ．　調査を行った分野

調査を行った最小限資料（国際特許分類（ＩＰＣ））

Int.Cl.　H01J37/22, H01J37/153, H01J37/21

最小限資料以外の資料で調査を行った分野に含まれるもの

日本国実用新案公報	１９２２－１９９６年
日本国公開実用新案公報	１９７１－２０１０年
日本国実用新案登録公報	１９９６－２０１０年
日本国登録実用新案公報	１９９４－２０１０年

国際調査で使用した電子データベース（データベースの名称、調査に使用した用語）

Ｃ．　関連すると認められる文献

引用文献のカテゴリー＊	引用文献名　及び一部の箇所が関連するときは、その関連する箇所の表示	関連する請求項の番号
A	JP 2008-159286 A (株式会社日立ハイテクノロジーズ) 2008.07.10, 段落００１７－００３７、図１、図３（ファミリーなし）	１－２０
A	JP 2001-357811 A (株式会社日立製作所) 2001.12.26, 段落００１３－００２５、図２ & US 2001/0050338 A1	１－２０
A	JP 2006-140119 A (日本電子株式会社) 2006.06.01, 段落００６５－００８１、図１、図２ & US 2006/0169895 A1 & EP 1670028 A2	１－２０

☑　Ｃ欄の続きにも文献が列挙されている。　☐　パテントファミリーに関する別紙を参照。

＊　引用文献のカテゴリー
「Ａ」特に関連のある文献ではなく、一般的技術水準を示すもの
「Ｅ」国際出願日前の出願または特許であるが、国際出願日以後に公表されたもの
「Ｌ」優先権主張に疑義を提起する文献又は他の文献の発行日若しくは他の特別な理由を確立するために引用する文献（理由を付す）
「Ｏ」口頭による開示、使用、展示等に言及する文献
「Ｐ」国際出願日前で、かつ優先権の主張の基礎となる出願の日の後に公表された文献
「Ｔ」国際出願日又は優先日後に公表された文献であって出願と矛盾するものではなく、発明の原理又は理論の理解のために引用するもの
「Ｘ」特に関連のある文献であって、当該文献のみで発明の新規性又は進歩性がないと考えられるもの
「Ｙ」特に関連のある文献であって、当該文献と他の１以上の文献との、当業者にとって自明である組合せによって進歩性がないと考えられるもの
「&」同一パテントファミリー文献

国際調査を完了した日	国際調査報告の発送日
０４．０２．２０１０	１６．０２．２０１０

国際調査機関の名称及びあて先	特許庁審査官（権限のある職員）	２Ｉ	４０７３
日本国特許庁（ＩＳＡ／ＪＰ） 郵便番号１００－８９１５ 東京都千代田区霞が関三丁目４番３号	佐藤　仁美 電話番号　０３－３５８１－１１０１　内線　３２７３		

Ｃ（続き）．　関連すると認められる文献

引用文献のカテゴリー＊	引用文献名　及び一部の箇所が関連するときは、その関連する箇所の表示	関連する請求項の番号
A	JP 2007-173132 A (株式会社日立ハイテクノロジーズ) 2007.07.05, 段落００１５－００６５、図３、図４、図５、図６ & US 2007/0158567 A1	１－２０
A	JP 2003-16983 A (株式会社日立製作所) 2003.01.17, 段落００４９－００７２、図５ & US 2003/0006371 A1 & US 2006/0060781 A1	１－２０

ENGLISH TRANSLATION OF PCT INTERNATIONAL SEARCH REPORT

INTERNATIONAL SEARCH REPORT

International application No.
PCT/JP2010/000173

A. CLASSIFICATION OF SUBJECT MATTER
H01J37/22(2006.01)i, *H01J37/153*(2006.01)i, *H01J37/21*(2006.01)i

According to International Patent Classification (IPC) or to both national classification and IPC

B. FIELDS SEARCHED

Minimum documentation searched (classification system followed by classification symbols)
H01J37/22, H01J37/153, H01J37/21

Documentation searched other than minimum documentation to the extent that such documents are included in the fields searched

Jitsuyo Shinan Koho	1922-1996	Jitsuyo Shinan Toroku Koho	1996-2010
Kokai Jitsuyo Shinan Koho	1971-2010	Toroku Jitsuyo Shinan Koho	1994-2010

Electronic data base consulted during the international search (name of data base and, where practicable, search terms used)

C. DOCUMENTS CONSIDERED TO BE RELEVANT

Category*	Citation of document, with indication, where appropriate, of the relevant passages	Relevant to claim No.
A	JP 2008-159286 A (Hitachi High-technologies Corp.), 10 July 2008 (10.07.2008), paragraphs [0017] to [0037]; fig. 1, 3 (Family: none)	1-20
A	JP 2001-357811 A (Hitachi, Ltd.), 26 December 2001 (26.12.2001), paragraphs [0013] to [0025]; fig. 2 & US 2001/0050338 A1	1-20
A	JP 2006-140119 A (JEOL Ltd.), 01 June 2006 (01.06.2006), paragraphs [0065] to [0081]; fig. 1, 2 & US 2006/0169895 A1 & EP 1670028 A2	1-20

☒ Further documents are listed in the continuation of Box C. ☐ See patent family annex.

* Special categories of cited documents:
"A" document defining the general state of the art which is not considered to be of particular relevance
"E" earlier application or patent but published on or after the international filing date
"L" document which may throw doubts on priority claim(s) or which is cited to establish the publication date of another citation or other special reason (as specified)
"O" document referring to an oral disclosure, use, exhibition or other means
"P" document published prior to the international filing date but later than the priority date claimed
"T" later document published after the international filing date or priority date and not in conflict with the application but cited to understand the principle or theory underlying the invention
"X" document of particular relevance; the claimed invention cannot be considered novel or cannot be considered to involve an inventive step when the document is taken alone
"Y" document of particular relevance; the claimed invention cannot be considered to involve an inventive step when the document is combined with one or more other such documents, such combination being obvious to a person skilled in the art
"&" document member of the same patent family

Date of the actual completion of the international search 04 February, 2010 (04.02.10)	Date of mailing of the international search report 16 February, 2010 (16.02.10)
Name and mailing address of the ISA/ Japanese Patent Office Facsimile No.	Authorized officer Telephone No.

INTERNATIONAL SEARCH REPORT

International application No.
PCT/JP2010/000173

C (Continuation). DOCUMENTS CONSIDERED TO BE RELEVANT

Category*	Citation of document, with indication, where appropriate, of the relevant passages	Relevant to claim No.
A	JP 2007-173132 A (Hitachi High-technologies Corp.), 05 July 2007 (05.07.2007), paragraphs [0015] to [0065]; fig. 3, 4, 5, 6 & US 2007/0158567 A1	1-20
A	JP 2003-16983 A (Hitachi, Ltd.), 17 January 2003 (17.01.2003), paragraphs [0049] to [0072]; fig. 5 & US 2003/0006371 A1 & US 2006/0060781 A1	1-20

PCT WRITTEN OPINION

国際調査機関の見解書

国際出願番号　ＰＣＴ／ＪＰ２０１０／０００１７３

第Ｖ欄　新規性、進歩性又は産業上の利用可能性についてのＰＣＴ規則43の2.1(a)(i)に定める見解、それを裏付ける文献及び説明

１．　見解

新規性（N）	請求項	１－２０	有
	請求項		無
進歩性（ＩＳ）	請求項	１－２０	有
	請求項		無
産業上の利用可能性（ＩＡ）	請求項	１－２０	有
	請求項		無

２．　文献及び説明

文献１：JP 2008-159286 A（株式会社日立ハイテクノロジーズ）2008.07.10,
段落００１７－００３７、図１、図３（ファミリーなし）

文献２：JP 2001-357811 A（株式会社日立製作所）2001.12.26,
段落００１３－００２５、図２ & US 2001/0050338 A1

文献３：JP 2006-140119 A（日本電子株式会社）2006.06.01,
段落００６５－００８１、図１、図２
& US 2006/0169895 A1 & EP 1670028 A2

文献４：JP 2007-173132 A（株式会社日立ハイテクノロジーズ）2007.07.05,
段落００１５－００６５、図３、図４、図５、図６ & US 2007/0158567 A1

文献５：JP 2003-16983 A（株式会社日立製作所）2003.01.17,
段落００４９－００７２、図５
& US 2003/0006371 A1 & US 2006/0060781 A1

文献１－５は、何れも国際調査報告で報告された文献である。

請求項１－２０に係る発明は、国際調査報告で引用された文献１－５に対して、新規性、進歩性を有する。

文献１－５には、傾斜角と方位角を変化させたビームを試料上に走査して複数枚の画像を取得し、それらの画像の非点隔差量、非点方向及び焦点ずれ量を測定し、それらの値から収差量を評価し、該評価した収差量を収差補正器の補正信号量及び次回収差評価時の制御手段の制御量にフィードバックし、前記評価した収差量が予め設定された目標値に到達するまで前記収差補正を繰り返す収差補正器を備えた荷電粒子線装置は記載も示唆もされていない。

一方、本発明は、これにより、短時間に高精度で収差補正が可能になるという、有利な効果を奏する。

ENGLISH TRANSLATION OF PCT WRITTEN OPINION

WRITTEN OPINION OF THE INTERNATIONAL SEARCHING AUTHORITY	International application No. PCT/JP2010/000173

Box No. V Reasoned statement under Rule 43*bis*.2.1(a)(i) with regard to novelty, inventive step or industrial applicability; citations and explanations supporting such statement

Statement

Novelty (N)	Claims	1-20	Yes
	Claims		No
Inventive step (IS)	Claims	1-20	Yes
	Claims		No
Industrial applicability (IA)	Claims	1-20	Yes
	Claims		No

Citations and explanations

Citation 1: JP 2008-159286 A (Hitachi High-technologies Corp.), 10 July 2008 (10.07.2008), paragraphs [0017] to 0037]; fig. 1, 3 (Family: none)

Citation 2: JP2001-357811 A (Hitachi, Ltd.), 26 December 2001 (26.12.2001), paragraphs [0013] to [0025]; fig.2 & US 2001/0050338 A1

Citation 3: JP2006-140119 A (JEOL Ltd.), 01 June 2006 (01.06.2006), paragraphs [0065] to [0081]; fig.1, 2 & US 2006/0169895 A1 & EP 1670028 A2

Citation 4: JP2007-173132 A (Hitachi High-technologies Corp.), 05 July 2007 (05.07.2007), paragraphs [0015] to [0065]; fig.3,4,5,6 &US 2007/0158567 A1

Citation 5: JP2003-16983 A (Hitachi, Ltd.), 17 January 2003 (17.01.2003), paragraphs [0049] to [0072]; fig.5 & US 2003/0006371 A1 & US 2006/0060781 A1

The above Citations 1-5 are those cited in the International Search Report.

The subject matters of claims 1 to 20 are novel and non-obvious in view of the teachings of Citations 1 to 5 cited in the ISR.

In Citations 1 to 5, there is neither description nor suggestion on charged particle radiation device provided with such aberration corrector as characterized in comprising the steps of obtaining a plurality of images by

a beam with its tilt angle and azimuth varied being scanned over a specimen; measuring astigmatic difference, direction of astigmatism and deviation from a focus of those images; evaluating amount of aberration on the basis of the measured values; feeding back the evaluated amount of aberration to be reflected on correction signals of the aberration corrector and amount of control determined by the controller at the subsequent evaluation step; and repeating the afore-mentioned aberration correction until the evaluated amount of aberration reaches a predetermined target value.

On the other hand, according to the subject invention, such favorable effect is brought as the aberration being corrected with a high degree of accuracy in a short period of time.

PCT APPLICATION CLAIMS

請求の範囲

[請求項1] 収差補正器を含む荷電粒子光学系と、

前記荷電粒子光学系の制御手段と、

情報処理装置とを備え、

前記情報処理装置は、

前記収差補正器の収差補正信号を生成、出力し、傾斜角と方位角を変化させたビームを試料上に走査して複数枚の画像を取得し、それらの画像の非点隔差量、非点方向及び焦点ずれ量を測定し、それらの値から収差量を評価し、該評価した収差量を前記収差補正器の補正信号量及び次回収差評価時の前記制御手段の制御量にフィードバックし、前記評価した収差量が予め設定された目標値に到達するまで前記収差補正を繰り返す

ことを特徴とする荷電粒子線装置。

[請求項2] 請求項１において、

前記情報処理装置は、

前記制御手段の制御量として、前記評価した収差量をフォーカス変化時の焦点範囲の制御量にフィードバックしながら前記収差補正を繰り返す

ことを特徴とする荷電粒子線装置。

[請求項3] 請求項１において、

前記情報処理装置は、

前記制御手段の制御量として、前記評価した収差量を前記傾斜角の制御量にフィードバックしながら前記収差補正を繰り返す

ことを特徴とする荷電粒子線装置。

[請求項4] 請求項１において、

前記情報処理装置は、

前記制御手段の制御量として、前記評価した収差量をフォーカス変化時の焦点範囲及び前記傾斜角の制御量にフィードバックしながら前

記収差補正を繰り返す

ことを特徴とする荷電粒子線装置。

[請求項5] 請求項１において、

前記情報処理装置は、

前記画像の非点隔差量、非点方向及び焦点ずれ量を前記画像の鮮鋭度変化のピーク値から求める場合に、測定するのに最適な測定条件として、フォーカス変化の最小値から最大値の間に前記鮮鋭度のピーク点が前記方位角に関わらず常に含まれており、なおかつ、前記ピーク周辺の鮮鋭度が単調減少する領域を含むように前記測定条件を設定する

ことを特徴とする荷電粒子線装置。

[請求項6] 請求項１において、

前記補正器の上部に設置された偏向器を備え、

前記偏向器を用いて前記試料へのビーム入射傾きと方位角を変化させた傾斜ビームを前記試料上に走査し、各方位角において、複数の焦点位置において画像を撮影し、撮影した複数の画像から前記非点隔差量、前記非点方向及び前記焦点ずれ量を測定し、それらの値から前記収差量を評価する

ことを特徴とする荷電粒子線装置。

[請求項7] 請求項６において、

前記情報処理装置は、

ある焦点位置について所定の試料入射角を持ったビームでの前記試料をスキャンした画像を撮影し、全てのビーム角度条件での画像を撮影し終わったら前記焦点位置を変更し、また所定の試料入射角の条件で撮影する、というステップを繰り返して前記画像を撮影する

ことを特徴とする荷電粒子線装置。

[請求項8] 請求項１において、

前記ビームの傾斜角を調整する傾斜角調整手段を備え、

前記情報処理装置は、

前記荷電粒子光学系に残存する収差の値から、前記ビームの傾斜時に発生するであろう焦点ずれ及び非点ずれの値を算出し、該算出結果から前記ビームの傾斜量を決定し、前記傾斜角調整手段にフィードバックする

ことを特徴とする荷電粒子線装置。

[請求項9] 請求項８において、

前記傾斜角調整手段は、前記収差補正器の上方に位置した２段偏向コイルである

ことを特徴とする荷電粒子線装置。

[請求項10] 請求項８において、

前記傾斜角調整手段は、前記収差補正器上方に位置した静電偏向器である

ことを特徴とする荷電粒子線装置。

[請求項11] 請求項１において、

前記荷電粒子光学系の焦点位置を調整する焦点位置調整手段を備え、

前記荷電粒子光学系に残存する収差の値から、前記ビームの傾斜時に発生するであろう前記焦点ずれ及び前記非点ずれの値を算出し、該算出結果から複数の焦点位置を決定し、前記焦点位置調整手段にフィードバックする

ことを特徴とする荷電粒子線装置。

[請求項12] 請求項１１において、

前記焦点位置調整手段は、対物レンズ励磁電流である

ことを特徴とする荷電粒子線装置。

[請求項13] 請求項１１において、

前記試料を保持する試料台を備え、

前記焦点位置調整手段は、前記試料台に印加される負電圧である

ことを特徴とする荷電粒子線装置。

[請求項14] 請求項１１において、

前記荷電粒子光学系は対物レンズ及び該対物レンズ上方に設置される静電レンズを備え、

前記焦点位置調整手段は、前記静電レンズに印加される電圧であることを特徴とする荷電粒子線装置。

[請求項15] 収差補正器を含む荷電粒子光学系と、

前記荷電粒子光学系の制御手段と、

情報処理装置とを備え、

収差補正された一次荷電粒子線を試料に照射して、発生する二次粒子を検出して二次粒子信号として出力する荷電粒子線装置において、

前記試料へのビーム入射傾きと方位角を変化させた前記一次荷電粒子線を前記試料上に走査して複数枚の画像を取得し、該複数枚の画像の非点隔差量、非点方向及び焦点ずれ量を各々測定し、それらの測定値から収差を評価し、該評価した収差量が予め設定された目標値に到達するまで、該評価した収差量を前記収差補正器及び前記荷電粒子光学系の次の収差評価時における制御にフィードバックする処理を繰り返す

ことを特徴とする荷電粒子線装置。

[請求項16] 請求項１５において、

前記情報処理装置は、

収差C_3の値と前記ビームの傾斜時の非点収差及び焦点ずれの値C_1’、A_1’の値との関係を与えるテーブルを備え、

前記ビーム傾斜時の非点収差及び焦点ずれの測定において、ある傾斜角tにおいて測定された収差C_3の値と前記収差補正器に印加する電圧から次回の補正後の収差C_3の大きさを予測し、該予測したC_3に対応するC_1’、A_1’の値の関係を前記テーブルから求め、該C_1’、A_1’を測定するのに最適な測定条件を設定する

ことを特徴とする荷電粒子線装置。

[請求項17] 請求項１６において、

前記情報処理装置は、

前記C_1'、A_1'を前記画像の鮮鋭度変化のピーク値から求める場合に、測定するのに最適な測定条件として、フォーカス変化の最小値から最大値の間に前記鮮鋭度のピーク点が前記方位角に関わらず常に含まれており、なおかつ、前記ピーク周辺の前記鮮鋭度が単調減少する領域を含むように前記測定条件を設定する

ことを特徴とする荷電粒子線装置。

[請求項18] 請求項１５において、

前記情報処理装置は、画像処理装置とカラム制御部を備えており、

前記画像処理装置は、

前記試料へのビーム入射傾きと方位角を変化させたビームを試料上に走査して複数枚の画像を取得する画像取得部と、

取得した複数枚の画像の非点隔差量、非点方向及び焦点ずれ量を測定する測定処理部と、測定により得られた非点隔差量、非点方向及び焦点ずれ量の値から収差補正係数を演算する収差係数演算部とを備えており、

前記カラム制御部は、

前記画像処理装置で得られた前記収差補正係数と目標値との関係から収差補正の継続の要否を判定する収差補正要否判定部と、

前記収差補正を行なう場合に各収差係数の値が小さくなるような測定条件を算出する測定・再測定条件算出部と、

最適な収差測定条件を決定するための情報を与えるテーブルと、

前記測定・再測定条件算出部の出力に基き信号を生成する収差補正処理部とを備えている

ことを特徴とする荷電粒子線装置。

[請求項19] 請求項１８において、

前記収差補正処理部は、制御電源の出力電圧・電流値を計算し、制御信号として前記収差補正器にフィードバックすると共に、フォーカス変化時の焦点範囲や傾斜角の制御信号を生成、出力する

ことを特徴とする荷電粒子線装置。

[請求項20] 請求項１５において、

前記情報処理装置は、

前記ビーム傾斜時の非点収差及び焦点ずれの測定において、収差C_3の値と前記ビームの傾斜時の非点収差及び焦点ずれの値C_1'、A_1'の値との関係を、次式（９）、（１０）の関係から演算により求め、次の収差C_3評価のために前記C_1'、A_1'を測定するのに最適な測定条件を設定する

ことを特徴とする荷電粒子線装置。

[数1]

$$C_1' = 2C_3t^2 \quad \cdots(9)$$

[数2]

$$A_1' = 2C_3t^2e^{2i\phi} \quad \cdots(10)$$

ENGLISH TRANSLATION OF PCT APPLICATION CLAIMS

CLAIMS

[Claim 1] A charged particle radiation device comprising:

a charged particle optical system including an aberration corrector;

a control means of the charged particle optical system; and

an information processing unit,

wherein the information processing unit generates an aberration correction signal of the aberration corrector to be outputted, captures a plurality of images by causing a beam to scan over a specimen, both a tilt angle and an azimuth angle of the beam being varied, measures an astigmatic difference, an angle, and defocus with respect to the plurality of the images captured, evaluates an aberration amount from these values, and feeds back the evaluated aberration amount to a correction signal amount of the aberration corrector and a control amount of the control means at the time of the next evaluation, respectively, thereby repeats the aberration correction until the evaluated aberration amount reaches a preset target value.

[Claim 2] The charged particle radiation device according to claim 1,

wherein the information processing unit repeats the aberration correction while feeding back the evaluated aberration amount as the control amount of the control means to a control amount of a focus current variation width at the time of focus variation.

[Claim 3] The charged particle radiation device according to claim 1,

wherein the information processing unit repeats the aberration correction while feeding back the evaluated aberration amount as the control amount of the control means

to a control amount of the tilt angle.

[Claim 4] The charged particle radiation device according to claim 1,

wherein the information processing unit repeats the aberration correction while feeding back the evaluated aberration amount as the control amount of the control means to a control amount of a focus current variation width at the time of focus variation, and a control amount of the tilt angle.

[Claim 5] The charged particle radiation device according to claim 1,

wherein the information processing unit sets a measuring condition so as to always contain a peak point of the image sharpness between a focus variation minimum value and a focus variation maximum value regardless of the azimuth angle, and additionally, a region where image sharpness on the periphery of the peak undergoes a monotonic decrease, as the measuring condition optimum for measuring those values in the case of finding the astigmatic difference, the angle, and the defocus with respect to the images captured on the basis of a peak value in image sharpness variation.

[Claim 6] The charged particle radiation device according to claim 1,

further comprising a deflector provided above the aberration corrector,

wherein a tilted beam is caused to scan over the specimen by use of the deflector, an incident tilt of the beam against the specimen and an azimuth angle of the beam being varied, shoots an image at a plurality of focus positions, each image being at respective azimuth angles, and measures the astigmatic difference the angle and the defocus from the plurality of the images captured, thereby evaluating the aberration amount from these values.

[Claim 7] The charged particle radiation device according to claim 6,

wherein the information processing unit repeats a step of getting an image captured by causing a beam having a predetermined incident angle against the specimen at a focus position to scan over the specimen, changing the focus position upon completion of getting images under conditions of all the incident angles of the beam, and getting an image again under a condition of a predetermined incident angle against the specimen, thereby getting the image.

[Claim 8] The charged particle radiation device according to claim 1,

further comprising tilt angle adjustment means for adjusting the tilt angle of the beam,

wherein the information processing unit executes calculation of defocus, and astigma, expected to occur at the time of the beam tilting, on the basis of respective values of aberrations remaining in the charged particle optical system, and determines a tilt level of the beam on the basis of results of the calculation, thereby feeding back the tilt level to the tilt angle adjustment means.

[Claim 9] The charged particle radiation device according to claim 8,

wherein the tilt angle adjustment means is a two-stage deflection coil positioned above the aberration corrector.

[Claim 10] The charged particle radiation device according to claim 8,

wherein the tilt angle adjustment means is an electrostatic deflector positioned above the aberration corrector.

[Claim 11] The charged particle radiation device according to claim 1,

further comprising focus position adjustment means for adjusting a focus position of the charged particle optical system,

wherein calculation of the defocus and the astigma, expected to occur at the time of the beam tilting, is executed on the basis of respective values of aberrations remaining in the charged particle optical system, and a plurality of focus positions are determined on the basis of results of the calculation, whereupon the plurality of the focus positions are fed back to the focus position adjustment means.

[Claim 12] The charged particle radiation device according to claim 11,

wherein the focus position adjustment means is an objective lens excitation current.

[Claim 13] The charged particle radiation device according to claim 11,

further comprising a specimen table for holding the specimen,

wherein the focus position adjustment means has a negative voltage applied to the specimen table.

[Claim 14] The charged particle radiation device according to claim 11,

wherein the charged particle optical system is provided with an objective lens, and an electrostatic lens positioned above the objective lens, and

the focus position adjustment means has a voltage applied to the electrostatic lens.

[Claim 15] A charged particle radiation device for irradiating a specimen with an aberration-corrected primary charge particle beam, and detecting a secondary electron as generated, thereby outputting a secondary particle signal, the charged particle radiation device comprising:

a charged particle optical system including an aberration corrector;

control means of the charged particle optical system; and

an information processing unit,

wherein a plurality of images are captured by causing the primary charge particle beam to scan over the specimen, an incident tilt of the beam against the specimen and an azimuth angle of the beam being varied, measures an astigmatic difference, an angle, and defocus with respect to each of the plurality of the images captured, evaluates an aberration amount from these values, and repeats processing for feeding back the evaluated aberration amount to the aberration corrector and control of the charged particle optical system at the time of the next evaluation until the evaluated aberration amount reaches a preset target value.

[Claim 16] The charged particle radiation device according to claim 15,

wherein the information processing unit is provided with a data table for giving information on a relationship among a value of aberration C_3, a value of astigma C_1', and a value of defocus A_1',

wherein, at the time of the beam tilting, the information processing unit predicts magnitude of C_3 after the next correction on the basis of a value of aberration C_3 measured at a tilt angle t and a voltage applied to the aberration corrector in measurement of astigma, and defocus at the time of the beam tilting, and finds a relationship in value between C_1' and A_1', corresponding to the predicted magnitude of C_3 from the data table, thereby sets a measuring condition optimum for measuring the C_1' and the A_1'.

[Claim 17] The charged particle radiation device according to claim 16,

wherein the information processing unit sets a measuring

condition so as to always contain a peak point of the image sharpness between a focus variation minimum value and a focus variation maximum value regardless of an azimuth angle, and additionally, a region where image sharpness on the periphery of the peak undergoes a monotonic decrease, as the measuring condition optimum for measuring those values in the case of finding the C1' and the A1' on the basis of a peak value in image sharpness variation.

[Claim 18] The charged particle radiation device according to claim 15,

wherein the information processing unit is provided with an image processor and a column controller,

wherein the image processor includes:

an image-capturing part for capturing a plurality of images by causing a beam to scan over a specimen, an incident tilt of the beam against the specimen, and an azimuth angle of the beam being varied; and

an analysis part for measuring an astigmatic difference, an angle, and defocus with respect to the plurality of the images captured, and an aberration coefficient computing part for computing an aberration coefficient from an amount of the astigmatic difference, angle, and an amount of the defocus, obtained by measurement,

wherein the column controller includes:

a determination part for determining necessity of continuing aberration correction on the basis of a relationship between the aberration correction coefficient obtained by the image processor and a target value;

a determination part for measuring condition to determine such measuring condition as to render values of respective aberration coefficients smaller in the case of executing the aberration correction;

a data table for giving information to determine the best aberration-measuring condition; and

an aberration correction processing part for generating

a signal on the basis of an output from the determination part for measuring condition.

[Claim 19] The charged particle radiation device according to claim 18,

wherein the aberration correction processing part calculates an output voltage value and a current value of a control power source so as to be fed back as control signals to the aberration corrector, and generates and outputs control signals for a focus current variation width and a tilt angle, respectively, at the time of focus variation.

[Claim 20] The charged particle radiation device according to claim 15,

wherein the information processing unit finds a relationship between a value of aberration C_3 and a value of astigma C_1' at the time of the beam tilting, and a relationship between the value of aberration C_3, and a value of defocus A_1' at the time of the beam tilting, during measurement of astigma, and defocus, at the time of the beam tilting, by computation on the basis of a relationship expressed in the following equations (9), (10), respectively:

$$C_1' = 2C_3t^2 \quad \ldots (9)$$

$$A_1' = 2C_3t^2 e^{2i\phi} \quad \ldots (10)$$

thereby setting a measuring condition for measuring the C_1' and the A_1' for the next evaluation of the value of aberration C_3.

STATEMENT THAT ENGLISH TRANSLATION IS ACCURATE

VERIFICATION

I, Masaru Takenouchi, a national of Japan, Polaire I.P.C., 3rd Floor TOKYU REIT Hatchobori Bldg. 2-7-1, Hatchobori, Chuo-ku, Tokyo 104-0032 Japan, Verify that to the best of my knowledge and belief the following is a true English translation made by me of the annexed document which is the claims of International Application, No. PCT/JP2010/000173 filed on January 14, 2010.

Dated this 4th day of July, 2011

Masaru Takenouchi

Masaru Takenouchi, Translator

UNITED STATES PATENT AND TRADEMARK OFFICE

UNITED STATES DEPARTMENT OF COMMERCE
United States Patent and Trademark Office
Address: COMMISSIONER FOR PATENTS
P.O. Box 1450
Alexandria, Virginia 22313-1450
www.uspto.gov

APPLICATION NO.	FILING DATE	FIRST NAMED INVENTOR	ATTORNEY DOCKET NO.	CONFIRMATION NO.
13/143,965	07/11/2011	Kotoko Hirose	POL-7837	1165

24956 7590 11/02/2011
MATTINGLY & MALUR, PC
1800 DIAGONAL ROAD
SUITE 370
ALEXANDRIA, VA 22314

EXAMINER
KIM, ROBERT H

ART UNIT	PAPER NUMBER
2881	

MAIL DATE	DELIVERY MODE
11/02/2011	PAPER

Please find below and/or attached an Office communication concerning this application or proceeding.

The time period for reply, if any, is set in the attached communication.

UNITED STATES PATENT AND TRADEMARK OFFICE

Commissioner for Patents
United States Patent and Trademark Office
P.O. Box 1450
Alexandria, VA 22313-1450
www.uspto.gov

MATTINGLY & MALUR, PC
1800 DIAGONAL ROAD
SUITE 370
ALEXANDRIA VA 22314

***In re* Application of**	
HIROSE, *et al.*	**: DECISION ON REQUEST TO**
Application No.: 13/143,965	**: PARTICIPATE IN THE PATENT**
Filed: 11 July 2011	**: PROSECUTION HIGHWAY**
Attorney Docket No.: POL-7837	**: PROGRAM AND PETITION**
For: CHARGED PARTICLE	**: TO MAKE SPECIAL UNDER**
RADIATION DEVICE PROVIDED	**: 37 CFR 1.102(a)**
WITH ABERRATION CORRECTOR	

This is a decision on the request to participate in the PCT Patent Prosecution Highway (PCT-PPH) pilot program and the petition under 37 CFR 1.102(a), filed on 25 July 2011, to make the above-identified application special.

The request and petition are **GRANTED**.

Discussion

A grantable request to participate in the PCT-PPH pilot program and petition to make special require:

(1) The U.S. application must have an eligible relationship to one or more PCT applications where the ISA or IPEA are the JPO, EPO, KIPO, NPI, or USPTO;

(2) At least one claim in the PCT application has novelty, inventive step, and industrial applicability and must be free of any observations in Box VIII in the latest work product in the international stage or applicant must identify and explain why the claim(s) is/are not subject to the observation in Box VIII;

(3) Applicant must submit a copy of the claim(s) from the PCT application(s) that have novelty, inventive step, and industrial applicability along with an English translation thereof and a statement that the English translation is accurate, if the claims are not in the English language;

(4) All the claims in the U.S. application must sufficiently correspond or be amended to sufficiently correspond to the claim(s) that have novelty, inventive step, and industrial applicability in the PCT application(s);

(5) Examination of the U.S. application has not begun;

(6) Applicant must submit a copy of the latest international work product from the PCT application indicating that the claim(s) have novelty, inventive step, and industrial applicability along with an English translation thereof and a statement that the English translation is accurate if the latest international work product is not in the English language;

(7) Applicant must submit an IDS listing the documents cited by the PCT examiner in the international work product along with copies of documents except U.S. patents or U.S. patent application publications.

(8) Applicant is required to submit a claims correspondence table in English which indicates how all the claims in the U.S. application correspond to the claims indicated as having novelty, inventive step and industrial applicability in the latest international work product.

The request to participate in the PCT-PPH pilot program and petition comply with the above requirements. Accordingly, the above-identified application has been accorded "special" status.

Telephone inquiries concerning this decision should be directed to Michael Day at 571-272-1568.

All other inquiries concerning the examination or status of the application is accessible in the PAIR system at http://www.uspto.gov/ebc.index.html.

This application will be forwarded to the examiner for action on the merits commensurate with this decision once this application's formality reviews have been completed.

/Michael Day/

Michael Day
Quality Assurance Specialist
Technology Center 2800

CLAIMS

1. A wideband antenna comprising a feed element provided on a ground element, a passive element that surrounds the feed element with a gap, and plural short - circuit pins that connect the passive element to the ground element, wherein

a slit that generates a blocking band for preventing the radiation of a specific frequency is formed on the passive element in the vicinity of the connection pins.

2. The wideband antenna according to claim 1, wherein

the feed element and the passive element have a concentric shape, wherein the connection pins are equally spaced on the outer periphery of the passive element.

3. The wideband antenna according to claim 2, wherein

the slit is an arc concentric with the passive element.

4. The wideband antenna according to claim 2, wherein

the length of the slit is about $\lambda/2$, when the wavelength of the central frequency of the blocking band is defined as λ.

5. The wideband antenna according to claim 3, wherein

the length of the slit is about $\lambda/2$, when the wavelength of the central frequency of the blocking band is defined as λ.

6. The wideband antenna according to claim 2, wherein

the slit includes a pair of L-shaped slit and a reversed L-shaped slit.

7. The wideband antenna according to claim 6, wherein

the length of each of the L-shaped slit and the reversed L-shaped slit is about $\lambda/4$, when the wavelength of the central frequency of the blocking band is defined as λ.

8. The wideband antenna according to any one of claims 1 to 7, wherein

the passive element is mounted on a surface of a dielectric substrate.

9. The wideband antenna according to any one of claims 1 to 6, wherein

the feed element is a body of revolution of a logarithm curve that expands from the ground element toward the passive element.

10. The wideband antenna according to claim 9, wherein

the logarithm curve is

$$x = -x_0\exp[-t(z - z_1)] + x_0 + x_1$$

$$t = [\ln(1 + x_1/x_0)/[z_1 - z_2]$$

between a point $(x_1, 0, z_1)$ and a point $(0, 0, z_2)$.

TRANSLATION VERIFICATION

I verify that I have checked and reviewed the above referenced translation and agree that it is a full and accurate translation.

September 21, 2011	Yoshikazu Ishii	石井 義和
Date	Printed Name	Signature

Under the Paperwork Reduction Act of 1995, no persons are required to respond to a collection of information unless it displays a valid OMB control number.

REQUEST FOR PARTICIPATION IN THE PATENT COOPERATION TREATY - PATENT PROSECUTION HIGHWAY (PCT-PPH) PILOT PROGRAM BETWEEN THE JAPAN PATENT OFFICE (JPO) AND THE USPTO

Application No.:	13/144,011	Filing Date:	July 11, 2011
First Named Inventor:	Fumio TAKAHASHI et al.		
Attorney Docket No.:	149736		
Title of the Invention:	WIDEBAND ANTENNA HAVING A BLOCKING BAND		

THIS REQUEST FOR PARTICIPATION IN THE PCT-PPH PILOT PROGRAM ALONG WITH THE REQUIRED DOCUMENTS MUST BE SUBMITTED VIA EFS-WEB. INFORMATION REGARDING EFS-WEB IS AVAILABLE AT HTTP://WWW.USPTO.GOV/EBC/EFS_HELP.HTML.

APPLICANT HEREBY REQUESTS PARTICIPATION IN THE PCT-PPH PROGRAM AND PETITIONS TO MAKE THE ABOVE-IDENTIFIED APPLICATION SPECIAL UNDER THE PCT-PPH PROGRAM.

The above-identified application is (1) a national stage entry of the corresponding PCT application, or (2) a national stage entry of another PCT application which claims priority to the corresponding PCT application, or (3) a national application that claims domestic/ foreign priority to the corresponding PCT application, or (4) a national application which forms the basis for the priority claim in the corresponding PCT application, or (5) a continuing application of a U.S. application that satisfies one of (1) to (4) above, or (6) a U.S. application that claims domestic benefit to a U.S. provisional application which forms the basis for the priority claim in the corresponding PCT application.

The corresponding PCT application number(s) is/are: PCT/JP2009/005725

The international date of the corresponding PCT application(s) is/are: October 29, 2009

I. **List of Required Documents:**

a. **A copy of the latest international work product (WO/ISA, WO/IPEA, or IPER) in the above–identified corresponding PCT application(s)**

☐ Is attached.

☒ Is not attached because the document is already in the U.S. application.

b. **A copy of all claims which were indicated as having novelty, inventive step and industrial applicability in the above-identified corresponding PCT application(s).**

☐ Is attached.

☒ Is not attached because the document is already in the U.S. application.

c. **English translations of the documents in a. and b. above are attached (if the documents are not in the English language). A statement that the English translation is accurate is attached for the document in b. above.**

This collection of information is required by 35 U.S.C. 119, 37 CFR 1.55, and 37 CFR 1.102(d). The information is required to obtain or retain a benefit by the public, which is to file (and by the USPTO to process) an application. Confidentiality is governed by 35 U.S.C. 122 and 37 CFR 1.11 and 1.14. This collection is estimated to take 2 hours to complete, including gathering, preparing, and submitting the completed application form to the USPTO. Time will vary depending upon the individual case. Any comments on the amount of time you require to complete this form and/or suggestions for reducing this burden should be sent to the Chief Information Officer, U.S. Patent and Trademark Office, U.S. Department of Commerce, P.O. Box 1450, Alexandria, VA 22313-1450. DO NOT SEND FEES OR COMPLETED FORMS TO THIS ADDRESS.

Under the Paperwork Reduction Act of 1995, no persons are required to respond to a collection of information unless it displays a valid OMB control number.

REQUEST FOR PARTICIPATION IN THE PCT-PPH PILOT PROGRAM BETWEEN THE JPO AND THE USPTO

(continued)

Application No.:	13/144,011
First Named Inventor:	Fumio TAKAHASHI et al.

d. **(1) An information disclosure statement listing the documents cited in the international work products (ISR, WO/ISA, WO/IPEA, IPER) of the corresponding PCT application.**

☐ Is attached.

☒ Has already been filed in the above-identified U.S. application on 7/11/2011 & 7/28/2011

(2) Copies of all documents (except) for U.S. patents or U.S. patent application publications)

☐ Are attached.

☒ Have already been filed in the above-identified U.S. application on 7/11/2011 & 7/28/2011

II. Claims Correspondence Table:

Claims in US Application	Patentable Claims in the corresponding PCT Application	Explanation regarding the correspondence
1	1	Claim 1 of the U.S. application sufficiently corresponds to claim 1 of the PCT application.
2	2	Claim 2 of the U.S. application sufficiently corresponds to claim 2 of the PCT application.
3	3	Claim 3 of the U.S. application sufficiently corresponds to claim 3 of the PCT application.
4	4	Claim 4 of the U.S. application sufficiently corresponds to claim 4 of the PCT application.
5	5	Claim 5 of the U.S. application sufficiently corresponds to claim 5 of the PCT application.
6	6	Claim 6 of the U.S. application sufficiently corresponds to claim 6 of the PCT application.
7	7	Claim 7 of the U.S. application sufficiently corresponds to claim 7 of the PCT application.
8	8	Claim 8 of the U.S. application sufficiently corresponds to claim 8 of the PCT application, except that multiple dependencies have been removed.
9	8	Claim 9 of the U.S. application sufficiently corresponds to claim 8 of the PCT application, except that multiple dependencies have been removed.
10	8	Claim 10 of the U.S. application sufficiently corresponds to claim 8 of the PCT application, except that multiple dependencies have been removed.
11	8	Claim 11 of the U.S. application sufficiently corresponds to claim 8 of the PCT application, except that multiple dependencies have been removed.
12	8	Claim 12 of the U.S. application sufficiently corresponds to claim 8 of the PCT application, except that multiple dependencies have been removed.
13	8	Claim 13 of the U.S. application sufficiently corresponds to claim 8 of the PCT application, except that multiple dependencies have been removed.

Under the Paperwork Reduction Act of 1995, no persons are required to respond to a collection of information unless it displays a valid OMB control number.

14	9	Claim 14 of the U.S. application sufficiently corresponds to claim 9 of the PCT application, except that multiple dependencies have been removed.
15	9	Claim 15 of the U.S. application sufficiently corresponds to claim 9 of the PCT application except that multiple dependencies have been removed.
16	9	Claim 16 of the U.S. application sufficiently corresponds to claim 9 of the PCT application, except that multiple dependencies have been removed.
17	9	Claim 17 of the U.S. application sufficiently corresponds to claim 9 of the PCT application, except that multiple dependencies have been removed.
18	9	Claim 18 of the U.S. application sufficiently corresponds to claim 9 of the PCT application, except that multiple dependencies have been removed.
19	9	Claim 19 of the U.S. application sufficiently corresponds to claim 9 of the PCT application, except that multiple dependencies have been removed.
20	10	Claim 20 of the U.S. application sufficiently corresponds to claim 10 of the PCT application, except that multiple dependencies have been removed.
21	10	Claim 21 of the U.S. application sufficiently corresponds to claim 10 of the PCT application, except that multiple dependencies have been removed.
22	10	Claim 22 of the U.S. application sufficiently corresponds to claim 10 of the PCT application, except that multiple dependencies have been removed.
23	10	Claim 23 of the U.S. application sufficiently corresponds to claim 10 of the PCT application, except that multiple dependencies have been removed.
24	10	Claim 24 of the U.S. application sufficiently corresponds to claim 10 of the PCT application, except that multiple dependencies have been removed.
25	10	Claim 25 of the U.S. application sufficiently corresponds to claim 10 of the PCT application, except that multiple dependencies have been removed.

III. All the claims in the US application sufficiently correspond to the patentable claims in the corresponding PCT application.

Signature	Date September 22, 2011
Name (Print/Typed) James A. Oliff	Registration Number 27,075
Name (Print/Typed) Jennifer R. Andrew	Registration Number 61,185

OLIFF & BERRIDGE, PLC
P.O. Box 320850
Alexandria, Virginia 22320-4850
Telephone: (703) 836-6400

DEPOSIT ACCOUNT USE AUTHORIZATION
Please grant any extension necessary for entry of this filing; Charge any fee due to our Deposit Account No. 15-0461

Privacy Act Statement

The **Privacy Act of 1974 (P.L. 93-579)** requires that you be given certain information in connection with your submission of the attached form related to a patent application or patent. Accordingly, pursuant to the requirements of the Act, please be advised that: (1) the general authority for the collection of this information is 35 U.S.C. 2(b)(2); (2) furnishing of the information solicited is voluntary; and (3) the principal purpose for which the information is used by the U.S. Patent and Trademark Office is to process and/or examine your submission related to a patent application or patent. If you do not furnish the requested information, the U.S. Patent and Trademark Office may not be able to process and/or examine your submission, which may result in termination of proceedings or abandonment of the application or expiration of the patent.

The information provided by you in this form will be subject to the following routine uses:

1. The information on this form will be treated confidentially to the extent allowed under the Freedom of Information Act (5 U.S.C. 552) and the Privacy Act (5 U.S.C 552a). Records from this system of records may be disclosed to the Department of Justice to determine whether disclosure of these records is required by the Freedom of Information Act.
2. A record from this system of records may be disclosed, as a routine use, in the course of presenting evidence to a court, magistrate, or administrative tribunal, including disclosures to opposing counsel in the course of settlement negotiations.
3. A record in this system of records may be disclosed, as a routine use, to a Member of Congress submitting a request involving an individual, to whom the record pertains, when the individual has requested assistance from the Member with respect to the subject matter of the record.
4. A record in this system of records may be disclosed, as a routine use, to a contractor of the Agency having need for the information in order to perform a contract. Recipients of information shall be required to comply with the requirements of the Privacy Act of 1974, as amended, pursuant to 5 U.S.C. 552a(m).
5. A record related to an International Application filed under the Patent Cooperation Treaty in this system of records may be disclosed, as a routine use, to the International Bureau of the World Intellectual Property Organization, pursuant to the Patent Cooperation Treaty.
6. A record in this system of records may be disclosed, as a routine use, to another federal agency for purposes of National Security review (35 U.S.C. 181) and for review pursuant to the Atomic Energy Act (42 U.S.C. 218(c)).
7. A record from this system of records may be disclosed, as a routine use, to the Administrator, General Services, or his/her designee, during an inspection of records conducted by GSA as part of that agency's responsibility to recommend improvements in records management practices and programs; under authority of 44 U.S.C. 2904 and 2906. Such disclosure shall be made in accordance with the GSA regulations governing inspection of records for this purpose, and any other relevant (*i.e.*, GSA or Commerce) directive. Such disclosure shall not be used to make determinations about individuals.
8. A record from this system of records may be disclosed, as a routine use, to the public after either publication of the application pursuant to 35 U.S.C. 122(b) or issuance of a patent pursuant to 35 U.S.C. 151. Further, a record may be disclosed, subject to the limitations of 37 CFR 1.14, as a routine use, to the public if the record was filed in an application which became abandoned or in which the proceedings were terminated and which application is referenced by either a published application, an application open to public inspection or an issued patent.
9. A record from this system of records may be disclosed, as a routine use, to a Federal, State, or local law enforcement agency, if the USPTO becomes aware of a violation or potential violation of law or regulation.

Modified PTO/SB/20PCT-JP (01-2010)
Approved for use through 01/31/2012. OMB 0651-0058
U.S. Patent and Trademark Office; U.S. DEPARTMENT OF COMMERCE

Under the Paperwork Reduction Act of 1995, no persons are required to respond to a collection of information unless it displays a valid OMB control number.

REQUEST FOR PARTICIPATION IN THE PATENT COOPERATION TREATY - PATENT PROSECUTION HIGHWAY (PCT-PPH) PILOT PROGRAM BETWEEN THE JAPAN PATENT OFFICE (JPO) AND THE USPTO

Application No.:	13/144,012	Filing Date:	July 11, 2011
First Named Inventor:	Hideya SAITOH et al.	Attorney Docket No.:	2011_0930A
Title of the Invention:	ANESTHETIC COMPOUND NEEDLE		

THIS REQUEST FOR PARTICIPATION IN THE PCT-PPH PILOT PROGRAM ALONG WITH THE REQUIRED DOCUMENTS MUST BE SUBMITTED VIA EFS-WEB. INFORMATION REGARDING EFS-WEB IS AVAILABLE AT HTTP://WWW.USPTO.GOV/EBC/EFS_HELP.HTML

APPLICANT HEREBY REQUESTS PARTICIPATION IN THE PCT-PPH PROGRAM AND PETITIONS TO MAKE THE ABOVE-IDENTIFIED APPLICATION SPECIAL UNDER THE PCT-PPH PROGRAM.

The above-identified application is (1) a national stage entry of the corresponding PCT application, or (2) a national stage entry of another PCT application which claims priority to the corresponding PCT application, or (3) a national application that claims domestic/ foreign priority to the corresponding PCT application, or (4) a national application which forms the basis for the priority claim in the corresponding PCT application, or (5) a continuing application of a U.S. application that satisfies one of (1) to (4) above, or (6) a U.S. application that claims domestic benefit to a U.S. provisional application which forms the basis for the priority claim in the corresponding PCT application.

The corresponding PCT application number(s) is/are: PCT/JP2009/055295

The international date of the corresponding PCT application(s) is/are: March 18, 2009

I. List of Required Documents:

a. A copy of the latest international work product (WO/ISA, WO/IPEA, or IPER) in the above–identified corresponding PCT application(s)

[X] is attached.
[ ] is <u>not</u> attached because the document is already in the U.S. application.

b. A copy of all claims which were indicated as having novelty, inventive step and industrial applicability in the above-identified corresponding PCT application(s).

[ ] is attached.
[X] is <u>not</u> attached because the document is already in the U.S. application.

c. English translations of the documents in a. and b. above are attached (if the documents are not in the English language). A statement that the English translation is accurate is attached for the document in b. above.

d. (1) An information disclosure statement listing the documents cited in the international work products (ISR, WO/ISA, WO/IPEA, IPER) of the corresponding PCT application.

[ ] is attached.
[X] Has already been filed in the above-identified U.S. application on July 11, 2011.

(2) Copies of all documents (except for U.S. patents or U.S. patent application publications)

[ ] Are attached.
[X] Have already been filed in the above-identified U.S. application on July 11, 2011.

This collection of information is required by 35 U.S.C. 119, 37 CFR 1.55, and 37 CFR 1.102(d). The information is required to obtain or retain a benefit by the public, which is to file (and by the USPTO to process) an application. Confidentiality is governed by 35 U.S.C. 122 and 37 CFR 1.11 and 1.14. This collection is estimated to take 2 hours to complete, including gathering, preparing, and submitting the completed application form to the USPTO. Time will vary depending upon the individual case. Any comments on the amount of time you require to complete this form and/or suggestions for reducing this burden should be sent to the Chief Information Officer, U.S. Patent and Trademark Office, U.S. Department of Commerce, P.O. Box 1450, Alexandria, VA 22313-1450. DO NOT SEND FEES OR COMPLETED FORMS TO THIS ADDRESS.

Modified PTO/SB/20PCT-JP (01-2010)
Approved for use through 01/31/2012. OMB 0651-0058
U.S. Patent and Trademark Office; U.S. DEPARTMENT OF COMMERCE
Under the Paperwork Reduction Act of 1995, no persons are required to respond to a collection of information unless it displays a valid OMB control number.

REQUEST FOR PARTICIPATION IN THE PCT-PPH PILOT PROGRAM BETWEEN THE JPO AND THE USPTO

(continued)

Application No.:	13/144,012
First Named Inventor:	Hideya SAITOH et al.

II. Claims Correspondence Table:

Claims in US Application	Patentable Claims in the corresponding PCT Application	Explanation regarding the correspondence
1	1	Identical
2	2	Identical
3	3	Substantially identical - amended to remove multiple dependency
4	3	Substantially identical - added back in view of multiple dependency

III. All the claims in the US application sufficiently correspond to the patentable claims in the corresponding PCT application.

Signature	/W. Douglas Hahm/ 2011.07.18 13:54:18 -04'00'	Date: July 18, 2011
Name: (Print/Type)	W. Douglas Hahm	Registration No. 44,142

特許協力条約

発信人　日本国特許庁（国際調査機関）

代理人
神戸　真
様

あて名
〒160-0003
日本国東京都新宿区本塩町７番地　田中ビル第二別館２階

4/15

ＰＣＴ
国際調査機関の見解書
（法施行規則第40条の2）
［ＰＣＴ規則43の2.1］

発送日 (日.月.年)	１４．０４．２００９
出願人又は代理人 の書類記号　UNI-09-P02	今後の手続きについては、下記２を参照すること。

国際出願番号	国際出願日	優先日
ＰＣＴ／ＪＰ２００９／０５５２９５	(日.月.年)　１８．０３．２００９	(日.月.年)

国際特許分類（ＩＰＣ）Int.Cl. A61M5/158(2006.01)i, A61M5/32(2006.01)i

出願人（氏名又は名称）
株式会社ユニシス

１．この見解書は次の内容を含む。

- [x] 第Ⅰ欄　見解の基礎
- [ ] 第Ⅱ欄　優先権
- [ ] 第Ⅲ欄　新規性、進歩性又は産業上の利用可能性についての見解の不作成
- [ ] 第Ⅳ欄　発明の単一性の欠如
- [x] 第Ⅴ欄　ＰＣＴ規則43の2.1(a)(i)に規定する新規性、進歩性又は産業上の利用可能性についての見解、それを裏付けるための文献及び説明
- [ ] 第Ⅵ欄　ある種の引用文献
- [ ] 第Ⅶ欄　国際出願の不備
- [ ] 第Ⅷ欄　国際出願に対する意見

２．今後の手続き
国際予備審査の請求がされた場合は、出願人がこの国際調査機関とは異なる国際予備審査機関を選択し、かつ、その国際予備審査機関がＰＣＴ規則66.1の2(b)の規定に基づいて国際調査機関の見解書を国際予備審査機関の見解書とみなさない旨を国際事務局に通知していた場合を除いて、この見解書は国際予備審査機関の最初の見解書とみなされる。

この見解書が上記のように国際予備審査機関の見解書とみなされる場合、様式ＰＣＴ／ＩＳＡ／２２０を送付した日から３月又は優先日から２２月のうちいずれか遅く満了する期限が経過するまでに、出願人は国際予備審査機関に、適当な場合は補正書とともに、答弁書を提出することができる。

さらなる選択肢は、様式ＰＣＴ／ＩＳＡ／２２０を参照すること。

３．さらなる詳細は、様式ＰＣＴ／ＩＳＡ／２２０の備考を参照すること。

見解書を作成した日
０２．０４．２００９

名称及びあて先 日本国特許庁（ＩＳＡ／ＪＰ） 郵便番号１００－８９１５ 東京都千代田区霞が関三丁目４番３号	特許庁審査官（権限のある職員） 久郷　明義 電話番号　０３－３５８１－１１０１　内線　３３４４	３Ｅ	３９４２

国際調査機関の見解書

国際出願番号 PCT／JP2009／055295

第Ⅰ欄　見解の基礎

1．言語に関し、この見解書は以下のものに基づき作成した。

☑ 出願時の言語による国際出願

☐ 出願時の言語から国際調査のための言語である _____ 語に翻訳された、この国際出願の翻訳文（PCT規則12.3(a)及び23.1(b)）

2．☐ この見解書は、PCT規則91の規定により国際調査機関が認めた又は国際調査機関に通知された明らかな誤りの訂正を考慮して作成した（PCT規則43の2.1(b)）。

3．この国際出願で開示されたヌクレオチド又はアミノ酸配列に関して、以下に基づき見解書を作成した。

a．タイプ　☐ 配列表

☐ 配列表に関連するテーブル

b．フォーマット　☐ 紙形式

☐ 電子形式

c．提出時期　☐ 出願時の国際出願に含まれていたもの

☐ この国際出願と共に電子形式により提出されたもの

☐ 出願後に、調査のために、この国際調査機関に提出されたもの

4．☐ さらに、配列表又は配列表に関連するテーブルを提出した場合に、出願後に提出した配列若しくは追加して提出した配列が出願時に提出した配列と同一である旨、又は、出願時の開示を超える事項を含まない旨の陳述書の提出があった。

5．補足意見：

国際調査機関の見解書

国際出願番号 PCT／JP2009／055295

第V欄 新規性、進歩性又は産業上の利用可能性についてのPCT規則43の2.1(a)(i)に定める見解、それを裏付ける文献及び説明

1、 見解

新規性（N）	請求項	1-3	有
	請求項		無
進歩性（IS）	請求項	1-3	有
	請求項		無
産業上の利用可能性（IA）	請求項	1-3	有
	請求項		無

2、 文献及び説明

文献1：US 5320608 A (Carmen J. Gerrone) 1994.06.14, 全文、全図
文献2：WO 2004/091702 A1 (ドクタージャパン株式会社) 2004.10.28, 全文, 全図
文献3：JP 2001-353219 A (旭光学工業株式会社) 2001.12.25, 全文, 全図
文献4：JP 10-305101 A (ベクトン・ディキンソン・アンド・カンパニー) 1998.11.17, 全文, 全図
文献5：JP 2943856 B2 (ベクトン・ディキンソン・アンド・カンパニー) 1999.08.30, 全文, 全図

請求の範囲1－3に係る発明は、国際調査報告で引用された何れの文献にも開示されておらず、新規性及び進歩性を有する。特に、請求の範囲1に係る発明の外針、内針及び筒状のアダプタを有し、内針の基端に設けられた筒状の内針基端部の前部をアダプタの後端部に取り付け、アダプタの先端から外針基端に設けられた筒状の外針基端部を挿入し、外針の先端から内針の先端を突出させる麻酔用複合針において、前記外針基端部の少なくとも下面に複数の周方向の溝が該基端部の軸方向に沿って並列して形成され、前記アダプタは、その上面に設けた開口から、前記外針基端部が挿通される挿通孔を有する規制板が装入されると共に、該規制板を下方に押し下げたときに上方に付勢し、押し下げる力を解除すると該規制板を押し上げる付勢手段を有し、前記規制板の挿通孔の下面には、上方に突出し、前記外針基端部の溝と係合する突起が形成され、前記規制板を押し下げた状態では前記外針基端部の溝と前記規制板の突起の係合が外れて内針が外針に対して前進・後退可能なアンロック状態となり、押し下げを解除すると前記規制板が上昇して前記外針基端部の溝と前記規制板の突起が係合し、内針が外針に対して前進・後退不能なロック状態となる点は、何れの文献にも開示されておらず、当業者にとって自明なものでもない。

WRITTEN OPINION OF THE INTERNATIONAL SEARCHING AUTHORITY

International application No.
PCT/JP2009/055295

Box No. V Reasoned statement under Rule 43bis.1(a)(i) with regard to novelty, inventive step or industrial applicability; Citations and explanations supporting such statement

1. Statement

Novelty (N)	Claims	1-3	YES
	Claims		NO
Inventive step (IS)	Claims	1-3	YES
	Claims		NO
Industrial applicability (IA)	Claims	1-3	YES
	Claims		NO

2. Citations andexplanations:

Document 1: US 5320608 A (Carmen J. Gerrone), 14 June, 1994
Full text; all drawings
Document 2: WO 2004/091702 A1 (Dr. Japan Co., Ltd.), 28 October, 2004
Full text; all drawings
Document 3: JP 2001-353219 A (Asahi Optical Co., Ltd.), 25 December, 2001
Full text; all drawings
Document 4: JP 10-305101 A (Becton, Dickinson and Co.), 17 November, 1998
Full text; all drawings
Document 5 : JP 2943856 B2 (Becton, Dickinson and Co.), 30 August, 1999
Full text; all drawings

The invention as in claims 1-3 is not described in any of the documents cited in the ISR, and is novel and involves an inventive step.

With regard to the feature of the invention as in claim 1, wherein "comprising an outer needle, an inner needle, and a tubular adaptor, wherein a front portion of a tubular inner needle proximal end portion disposed at a proximal end of the inner needle is attached to a rear end portion of the adaptor, a tubular outer needle proximal end portion disposed at a proximal end of the outer needle is inserted from a distal end of the adaptor, and a distal end of the inner needle is caused to protrude from a distal end of the outer needle, wherein a plurality of grooves are formed in parallel in a peripheral direction along an axial direction of the outer needle proximal end portion at least in a lower surface of the outer needle proximal end portion, wherein a restricting plate having an insertion hole through which the outer needle proximal end portion is inserted is inserted into the adaptor from an opening formed in an upper surface of the adaptor, the adaptor being provided with urging means that urges the restricting plate upward when the restricting plate is pushed downward and that pushes the restricting plate upward when the pushing-down force is released, wherein a protrusion is formed on a lower surface of the insertion hole of the restricting plate, the protrusion protruding upward and engaging with one of the grooves of the outer needle proximal end portion, wherein, when the restricting plate is pushed down, the groove of the outer needle proximal end portion and the protrusion of the restricting plate are disengaged from each other and the inner needle is set to an unlocked state in which the inner needle is able to be advanced or retracted relative to the outer needle, and wherein, when the pushing down is released, the restricting plate moves up and one of the grooves of the outer needle proximal end portion and the protrusion of the restricting plate are engaged with each other and the inner needle is set to a locked state in which the inner needle is unable to be advanced or retracted relative to the outer needle," no prior art documents disclosing or suggesting the feature could be found, and it would not be obvious to a person skilled in the art.

UNITED STATES PATENT AND TRADEMARK OFFICE

Commissioner for Patents
United States Patent and Trademark Office
Washington, D.C. 20231
www.uspto.gov

MAILED

SEP 14 2011

PCT LEGAL ADMINISTRATION

VOLPE AND KOENIG, P.C.
UNITED PLAZA
30 SOUTH 17TH STREET
PHILADELPHIA PA 19103

In re Application of	:	
COSTABEL et al.	:	DECISION ON
Serial No.: 13/144,013	:	
PCT No.: PCT/EP10/52262	:	PETITION
Int. Filing Date: 23 February 2010	:	
Priority Date: 05 March 2009	:	UNDER 37 CFR 1.47(a)
Atty Docket No.: SFS-PT095	:	
For: CONNECTING DEVICE	:	

This is a decision on applicant's "Petition under 37 CFR 1. 47(a)" filed 11 July 2011 in the United States Patent and Trademark Office (USPTO) requesting acceptance of the application without the signature of nonsigning inventor MARKUS SCHMIDT.

BACKGROUND

On 23 February 2010, applicant filed international application PCT/EP10/52262. The application claimed a priority date of 05 March 2009, and it designated the United States. The deadline for submission of the basic national fee was thirty months from the priority date, i.e., 05 September 2011.

On 11 July 2011, a Transmittal Letter for entry into the national stage in the United States was filed accompanied by, among other materials, payment of the basic national fee. The national stage request also included a "Petition Under 37 CFR §1.47(a)" considered herein. The petition requests acceptance of the application without the signature of inventor of record MARKUS SCHMIDT, whom petitioner asserts has refused to execute the application.

DISCUSSION

A petition under 37 CFR §1.47(a) must be accompanied by (1) the requisite petition fee, (2) factual proof that the non-signing joint inventor(s) refuses to execute the application or cannot be reached after diligent effort, (3) a statement of the last known address of the non-signing inventor(s), and (4) an oath or declaration by each available joint inventor on his or her own behalf and on behalf of the non-signing joint inventor(s).

Applicant paid $200 for the petition fee. Item (1) is satisfied.

Regarding item (2), MPEP section 409.03(d) states that, before it can be concluded that an inventor has refused to execute the application papers, "[a] copy of the application papers should be sent to the last known address of the nonsigning inventor, or, if the nonsigning inventor is represented by counsel, to the address of the nonsigning inventor's attorney."

Here, Petitioner submitted a statement from Jurg Pluss, Head of Intellectual Property Managment at SFS intec AG, with supporting documents, providing firsthand confirmation that a request for the inventor's signature accompanied by a copy of the application was forwarded to the non-signing inventor at his last known address and that in email communications, the inventor refused to sign the application papers. These materials provide an acceptable showing that the non-signing inventor has refused to execute the application. Item (2) is therefore satisfied.

Regarding item (3), the petition includes an express statement of the last known address of the non-signing inventor. Item (3) is therefore satisfied.

Regarding item (4), the petition was accompanied by declaration signed on behalf of the nonsigning inventor by the joint inventor. Item (4) is therefore satisfied.

In sum, Items (1)-(4) are satisfied. Accordingly, it is appropriate to accord the national stage application status under 37 CFR §1.47(a) at this time.

CONCLUSION

The petition under 37 CFR 1.47(a) is **GRANTED**.

The U.S. Designated/Elected Office has accepted the application as a 37 CFR 1.47(a) application using the declaration filed 11 July 2011 The application has an international filing date of 23 February 2010 under 35 U.S.C. 363, and a date of 05 September 2011 under 35 U.S.C. 371(c).

As provided in 37 CFR 1.47(a), a notice of the filing of this application will be forwarded to the non-signing inventor at his respective last known address of record. Also, a notice of the filing of this application will be published in the Official Gazette.

/Cynthia M. Kratz/
Cynthia M. Kratz
Attorney Advisor
PCT Legal Office
Office of PCT Legal Administration

Tel: 571-272-3286
Fax: 571-273-0459

UNITED STATES PATENT AND TRADEMARK OFFICE

Commissioner for Patents
United States Patent and Trademark Office
P.O. Box 1450
Alexandria, VA 22313-1450
www.uspto.gov

MAILED

SEP 14 2011

PCT LEGAL ADMINISTRATION

MARKUS SCHMIDT
KREUZSTRASSE 26
DE-75391 GESCHINGEN
GERMANY

In re Application of
COSTABEL et al.
Serial No.: 13/144,013
PCT No.: PCT/EP10/52262
Int. Filing Date: 23 February 2010
Priority Date: 05 March 2009
Atty Docket No.: SFS-PT095
For: CONNECTING DEVICE

Dear Mr. Schmidt:

You are named as an inventor in the above identified United States patent application, filed under the provisions of 37 CFR 1.47(a) and 35 U.S.C. § 116. Should a patent be granted, you will be designated as an inventor.

As a named inventor, you are entitled to inspect any paper in the file wrapper of the application, order copies of all or any part thereof (at a prepaid cost per 37 CFR 1.19) or to make your position of record in the application. Alternatively, you may arrange to do any of the preceding through a registered patent agent or attorney presenting written authorization from you. If you care to join in the application, counsel of record (see below) would presumably assist you. Joining in the application would entail the filing of an appropriate oath or declaration by you pursuant to 37 CFR 1.63.

/Cynthia M. Kratz/
Cynthia M. Kratz
Attorney Advisor
PCT Legal Office
Telephone: (571) 272-3286
Facsimile: (571) 273-0459

VOLPE AND KOENIG, P.C.
UNITED PLAZA
30 SOUTH 17TH STREET
PHILADELPHIA PA 19103

UNITED STATES PATENT AND TRADEMARK OFFICE

Commissioner for Patents
United States Patent and Trademark Office
P.O. Box 1450

MAILED
JAN 18 2012
OFFICE OF PETITIONS

GRIFFIN & SZIPL, PC
SUITE PH-1
2300 NINTH STREET, SOUTH
ARLINGTON VA 22204

In re Application of	: DECISION ON REQUEST TO
Keiichiro OSIHI	: PARTICIPATE IN PPH PROGRAM
Application No. 13/144,034	: AND PETITION TO MAKE SPECIAL
Filed: July 11, 2011	: UNDER 37 CFR 1.102(a)
Atty. Docket No.: MAKOTO0004	:

For: HIGH-STRENGTH AND HIGH-ELECTRICAL CONDUCTIVITY COPPER ALLOY ROLLED SHEET AND METHOD OF MANUFACTURING THE SAME

This is a decision on the request to participate in the Patent Prosecution Highway (PPH) program and the petition under 37 CFR 1.102(a), filed November 14, 2011 to make the above-identified application special.

The petition is **GRANTED**.

A grantable request to participate in the PPH (patent prosecution highway) program and petition to make special require:

(1) the U.S. application is a Paris Convention application which either validly claims priority under 35 U.S.C. 119(a) and 37 CFR 1.55 to one or more applications filed in the JPO (Japanese Patent Office) or claims priority to a PCT application that contains no priority claims. Alternatively, it can be a national stage application under the PCT which validly claims priority to an application filed in the JPO or claims priority to a PCT application that contains no priority claims. It can also be a "bypass application" filed under 35 U.S.C. 111(a) which validly claims benefit under 35 U.S.C. 120 to a PCT application, which PCT application validly claims priority to an application filed in the JPO or claims priority to a PCT application that contains no priority claims, or contains no priority claim;

(2) applicant must submit a copy of the allowable/patentable claim(s) from the JPO application(s) along with an English translation thereof and a statement that the English translation is accurate;

(3) all the claims in the U.S. application must sufficiently correspond or be amended to sufficiently correspond to the allowable/patentable claim(s) in the JPO application(s);

(4) examination of the U.S. application has not begun;

(5) applicant must submit a copy of all the office actions from each of the JPO application(s) containing the allowability/patentable claim(s) along with an English translation thereof and a statement that the English translation is accurate; and

(6) applicant must submit an IDS listing the documents cited by the JPO examiner in the JPO office action along with copies of documents except U.S. patents or U.S. patent application publications.

The request to participate in the PPH program and petition comply with the above requirements. Accordingly, the above-identified application has been accorded "special" status.

Telephone inquiries concerning this decision should be directed to Robert DeWitty, Petition Attorney, Office of Petitions at 571-272-8427.

All other inquiries concerning the examination or status of the application is accessible in the PAIR system at http://www.uspto.gov/ebc/index.html.

This application will be forwarded to Technology Center Art Unit 1733 for action as appropriate commensurate with this decision.

David Bucci
Petitions Examiner
Office of Petitions

IN THE UNITED STATES PATENT AND TRADEMARK OFFICE

APPLICANTS	:	Daisuke MASAKI, et al.
SERIAL NO.	:	**13/144,069**
FILED	:	11 July 2011
FOR	:	FUEL CELL STACK MOUNTING STRUCTURE AND FUEL CELL STACK MOUNTING METHOD
GROUP ART UNIT	:	1731 Conf. No. **2157**
EXAMINER	:	

COMMISSIONER FOR PATENTS
P. O. Box 1450
Alexandria, VA 22313-1450

Attention: Magdalen Greenlief

SUBMISSION OF REQUEST FOR PARTICIPATION IN THE PATENT PROSECUTION HIGHWAY (PPH) PROGRAM

Sir:

Applicants hereby request participation in the Patent Prosecution Highway (PPH) Program and ***petition to make this application special under the PPH Program***. To comply with the requirements, the following papers are transmitted:

1) Request For Participation in the Patent Prosecution Highway Program Between the JPO and the USPTO with claims correspondence table;

2) Japanese Language Version of Patentable Claims in Japanese Application No. JP 2011-521031;

3) English Translation of Patentable Claims in Japanese Application No. JP 2011-5212031and translator's verification of the accuracy of the translation of the allowed claims;

4) Preliminary Amendment.

REMARKS

In view of the foregoing documents transmitted herewith to comply with the Requirements For Participation in the Patent Prosecution Highway (PPH) Program between the JPO and the USPTO, Applicants respectfully request participation in the program as well as accelerated examination of this application.

The claims as amended in the attached amendment correspond to the Japanese allowed claims 1-4, as shown in the claims correspondence table attached to the PPH Request form.

The Examiner is invited to contact the undersigned at (202) 220-4420 to discuss any matter concerning this request.

The Office is authorized to charge any fees related to this filing to Deposit Account No. 11-0600.

Respectfully submitted,

Date: 28 February 2012

/Daniel G. Shanley/_____
Daniel G. Shanley
(Reg. No. 54,863)

KENYON & KENYON LLP
1500 K Street, N.W., #700
Washington, D.C. 20005

Telephone: (202) 220-4200
Facsimile: (202) 220-4201

PTO/SB/20JP (04-09)
Approved for use through 01/31/2012. OMB 0651-0058
U.S. Patent and Trademark Office; U.S. DEPARTMENT OF COMMERCE

Under the Paperwork Reduction Act of 1995, no persons are required to respond to a collection of information unless it displays a valid OMB control number.

REQUEST FOR PARTICIPATION IN THE PATENT PROSECUTION HIGHWAY (PPH) PROGRAM BETWEEN THE JPO AND THE USPTO

Application No.:	13/144,069	First Named Inventor:	Daisuke MASAKI
Filing Date:	11 July 2011	Attorney Docket No.:	02013/51
Title of the invention:	FUEL CELL STACK MOUNTING STRUCTURE AND FUEL CELL STACK MOUNTING METHOD		

THIS REQUEST FOR PARTICIPATION IN THE PPH PROGRAM ALONG WITH THE REQUIRED DOCUMENTS MUST BE SUBMITTED VIA EFS-WEB. INFORMATION REGARDING EFS-WEB IS AVAILABLE AT HTTP://WWW.USPTO.GOV/EBC/EFS_HELP.HTML.

APPLICANT HEREBY REQUESTS PARTICIPATION IN THE PATENT PROSECUTION HIGHWAY (PPH) PROGRAM AND PETITIONS TO MAKE THE ABOVE-IDENTIFIED APPLICATION SPECIAL UNDER THE PPH PROGRAM.

The above-identified application (1) validly claims priority under 35 U.S.C. 119(a) and 37 CFR 1.55 to one or more corresponding JPO application(s) or to a PCT application that does not contain any priority claim, or (2) is a national stage entry of a PCT application that does not contain any priority claim.

The JPO/PCT application number(s) is/are: 2011-521031

The filing date of the JPO/PCT application(s) is/are: 13 May 2011

I. List of Required Documents:

a. **A copy of the latest JPO office actions (other than "Decision to Grant a Patent"*) in the above-identified JPO application(s)**

☒ is attached.

☐ is not attached because the JPO application was allowed in a first office action.

***It is not necessary to submit a copy of the "Decision to Grant a Patent" and an English translation thereof.**

b. **A copy of all claims which were determined to be patentable by the JPO in the above-identified JPO application(s)**

☒ is attached.

c. **English translations of the documents in a. and b. above along with a statement that the English translations are accurate are attached (if the documents are not in the English language).**

d. **(1) An information disclosure statement listing the documents cited in the JPO office actions**

☐ is attached.

☒ has already been filed in the above-identified U.S. application on 2011-07-11

(2) Copies of all documents (except for U.S. patents or U.S. patent application publications)

☐ are attached.

☒ have already been filed in the above-identified U.S. application on 2011-07-11

This collection of information is required by 35 U.S.C. 119, 37 CFR 1.55, and 37 CFR 1.102(d). The information is required to obtain or retain a benefit by the public, which is to file (and by the USPTO to process) an application. Confidentiality is governed by 35 U.S.C. 122 and 37 CFR 1.11 and 1.14. This collection is estimated to take 2 hours to complete, including gathering, preparing, and submitting the completed application form to the USPTO. Time will vary depending upon the individual case. Any comments on the amount of time you require to complete this form and/or suggestions for reducing this burden should be sent to the Chief Information Officer, U.S. Patent and Trademark Office, U.S. Department of Commerce, P.O. Box 1450, Alexandria, VA 22313-1450. DO NOT SEND FEES OR COMPLETED FORMS TO THIS ADDRESS.

Under the Paperwork Reduction Act of 1995, no persons are required to respond to a collection of information unless it displays a valid OMB control number.

REQUEST FOR PARTICIPATION IN THE PATENT PROSECUTION HIGHWAY (PPH) PROGRAM BETWEEN THE JPO AND THE USPTO

(continued)

Application No.:	13/144,069	First Named Inventor:	Daisuke MASAKI

II. Claims Correspondence Table:

Claims in US Application	Patentable Claims in JPO Application	Explanation regarding the correspondence
1	1	Amended US claim 1 corresponds to JP claim 1.
2	2	US claim 2 corresponds to JP claim 2.
3	3	Amended US claim 3 corresponds to JP claim 3.
4	4	Amended US claim 4 corresponds to JP claim 4.

III. All the claims in the US application sufficiently correspond to the patentable/allowable claims in the JPO application.

IV. Payment of Fees:

The petition fee under 37 CFR 1.17(h) as required by 37 CFR 1.102(d) must be paid via EFS-Web (using credit card, authorization to charge a deposit account, or electronic funds transfer).

Signature /Daniel G. Shanley/	Date 28 February 2012
Name (Print/Typed) Daniel G. Shanley	Registration Number 54,863

VERIFICATION OF TRANSLATION

I, Kenichi Hori of Meisei International Patent Firm of Mitsui-Sumitomo Bank Building 7F, 18-19, Nishiki 2-chome, Naka-ku, Nagoya-shi, Aichi-ken, 460-0003 Japan, declare:

1. that I am well acquainted with both the English and Japanese languages, and

2. that the attached document is true and correct translation made by me to the best of my knowledge and belief of:-

   NOTIFICATION OF REASON FOR REJECTION dated July 26, 2011, issued in the Japanese Application No. 2011-521031

Date: Feb. 16, 2012

Kenichi Hori

Dispatch No. 491523
Dispatch Date: July 26, 2011

NOTIFICATION OF REASON FOR REJECTION

Patent Application No.	2011-521031	
Drafting Date	July 19, 2011	
Examiner of JPO	MISAWA Tetsuya	9827 3D00
Representative/Applicant	Meisei International Patent Firm	
Applied Provision	Article 36 of Patent Act	

The present application shall be rejected for the reasons below. If the applicant has any argument against the reasons, such argument should be submitted within 60 days from the dispatch date of the notification.

Reasons

Reason 1

The present application does not fulfill the requirement provided in Article 36(6)(ii) of Patent Act with regard to the claims as noted below.

Note

As for the description in claim 3 of "a tip of the protruding portion is in contact with the end plate or the first compressor," it is unclear which portion is represented by the term "a tip of the protruding portion."

As for the descriptions in claim 4 of "each of the straight line sides" and "each of the one sides," it is unclear how they relate to "one straight line side."

Thus, claims 3 and 4 are unclear.

Reason 2

The present application does not fulfill the requirement provided in Article 36(4)(i) of Patent Act with regard to the detailed description of the invention as noted below.

Note

In Fig. 1, a member numbered 602 is also numbered 120. The member seems to be incorrectly numbered 120.

Thus, the detailed description of the invention in the present application is not stated in such a clear and sufficient manner that a person of ordinary skill in the art would have achieved claims 1-4.

Upon amendment, note that:

1) The applicant shall draw a line under a portion where the description is changed through an amendment of the specification (Recitals 6 and 7 of Form 13, Regulations under Patent Act);

2) The applicant shall file an argument in writing to indicate a portion of the original specification upon which the amendment relies and shall insist the reason that the amendment is proper (For the format of a written argument, see the writing format of a request of correction in invalidation appeal.); and

3) (The applicant shall apply symbols to each element of the claims if possible (If symbols cannot be directly applied to the claims, the claims with symbols applied to each element shall be stated in the written argument.).)

Record of the result of prior art search

Searched field	IPC B60K 8/00
	1/04
	B60L11/18
	H01M 8/00
Prior art documents	JP2006-218966A
	JP2009-295482A
	JP2003-173790A
	JP2002-373691A
	JP2007-107478A
	JP2009-184589A
	JP2006-155981A

JP2007-157364A

This record of the result of prior art search does not constitute the reasons for rejection.

拒絶理由通知書

特許出願の番号	特願２０１１－５２１０３１
起案日	平成２３年　７月１９日
特許庁審査官	三澤　哲也　　９８２７　３Ｄ００
特許出願人代理人	特許業務法人明成国際特許事務所　様
適用条文	第３６条

この出願は、次の理由によって拒絶をすべきものです。これについて意見がありましたら、この通知書の発送の日から６０日以内に意見書を提出してください。

理　由

理　由　１

この出願は、特許請求の範囲の記載が下記の点で、特許法第３６条第６項第２号に規定する要件を満たしていない。

記

請求項３の「上端部が前記エンドプレートまたは前記第１のコンプレッサと接する突出部」における、「上端部」が突出部のどこを意味するのかが、明確でない。

請求項４の「前記直線状の各辺」及び「前記各１辺」は、「直線状の１辺」との対応関係が不明確である。

よって、請求項３及び４に係る発明は明確でない。

理　由　２

この出願は、発明の詳細な説明の記載が下記の点で、特許法第３６条第４項第１号に規定する要件を満たしていない。

記

図１において、６０２の図番が付与されている部材が、１２０の図番も付与されているが、図１において、１２０の付与が間違えている誤記ではないか。

よって、この出願の発明の詳細な説明は、当業者が請求項１乃至４に係る発明

を実施することができる程度に明確かつ十分に記載されたものでない。

<補正をする際の注意>
（１）補正する際には、補正により記載を変更した箇所に下線を引くようにしてください（特許法施行規則様式第１３備考６、７）。
（２）補正する際には、意見書で、各補正事項について補正が適法なものである理由を、根拠となる出願当初の明細書等の記載箇所を明確に示した上で、主張してください。（意見書の記載形式は、無効審判における訂正請求書の記載形式を参考にされたい。）
（３）（可能で有れば特許請求の範囲の構成要素に符号を付けてください。（請求の範囲に直接符号を入れることが無理な場合には、意見書に、構成要素に符号を付した請求の範囲を記載して下さい））

－－－－－－－－－－－－－－－－－－－－－－－－－－－－－－－－－－－－－

先行技術文献調査結果の記録

・調査した分野　ＩＰＣ　Ｂ６０Ｋ　８／００
　　　　　　　　　　　　　　　　１／０４
　　　　　　　　　　　Ｂ６０Ｌ１１／１８
　　　　　　　　　　　Ｈ０１Ｍ　８／００
・先行技術文献　特開２００６－２１８９６６号公報
　　　　　　　　特開２００９－２９５４８２号公報
　　　　　　　　特開２００３－１７３７９０号公報
　　　　　　　　特開２００２－３７３６９１号公報
　　　　　　　　特開２００７－１０７４７８号公報
　　　　　　　　特開２００９－１８４５８９号公報
　　　　　　　　特開２００６－１５５９８１号公報
　　　　　　　　特開２００７－１５７３６４号公報
この先行技術文献調査の結果の記録は、拒絶理由を構成するものではない。

この拒絶理由通知の内容に関するお問い合わせ、または面接のご希望がございましたら下記までご連絡下さい。
特許審査第二部　運輸　三澤哲也
TEL. 03(3581)1101（内3341）
FAX. 03(3501)0530

VERIFICATION OF TRANSLATION

I, Kenichi Hori of Meisei International Patent Firm of Mitsui-Sumitomo Bank Building 7F, 18-19, Nishiki 2-chome, Naka-ku, Nagoya-shi, Aichi-ken, 460-0003 Japan, declare:

1. that I am well acquainted with both the English and Japanese languages, and

2. that the attached document is true and correct translation made by me to the best of my knowledge and belief of:-

ALLOWED CLAIMS of the Japanese Application No. 2011-521031

Date: Feb. 16, 2012

Kenichi Hori

CLAIMS

1. A structure for mounting a fuel cell in a vehicle, comprising

a fuel cell stack having a plurality of stacked cells, and a first and second end plate placed at both ends in stacking direction of the plurality of cells,

a first compressor for supplying oxidation gas to the fuel cell stack, and

a flat plate shaped heat radiator for cooling a cooling medium that circulates inside the fuel cell stack, wherein

the fuel cell stack is provided in an attitude in which the stacking direction of the plurality of cells is tilted relative to a front-back direction of the vehicle, and the second end plate is provided at forward and upper position relative to the first end plate in the vehicle,

the heat radiator is provided at a forward position relative to the second end plate and along the second end plate in the vehicle, and

the first compressor is fixed at total of three or more points to both the first and second end plates below the fuel cell stack.

2. A structure according to claim 1, further comprising

a second compressor for adjusting a temperature in an interior of the vehicle, wherein

a vertical dimension of the second compressor is smaller than those of the first compressor, and

the second compressor is provided below the fuel cell stack, and at a rear position relative to the first compressor.

3. A structure according to claim 1 or 2, further comprising

a waterproof case for covering at least one of the first and second end plates, wherein

the waterproof case comprises:

a hole in which a fixing member passes through, the fixing member fixing mutually the first compressor and the end plate covered by the waterproof case, and

a protruding portion that surrounds the hole, has elasticity, and protrudes to a side of the end plate covered by the waterproof case or a side of the first compressor, wherein

in a state in which the end plate covered by the waterproof case and the first compressor are fixed by the fixing member, a tip of the protruding portion is in contact with the end plate or the first compressor.

4. A method of mounting a fuel cell in a vehicle, comprising

(a) preparing

a fuel cell stack having a plurality of stacked cells and a first and second end plate placed at both ends in stacking direction of the plurality of cells,

a first compressor for supplying oxidation gas to the fuel cell stack, and

a flat plane shaped heat radiator for cooling a cooling medium that circulates inside the fuel cell stack, and

(b) attaching the fuel cell stack, the first compressor, and the heat radiator to the vehicle such that

the fuel cell stack is provided in an attitude in which the stacking direction of the plurality of cells is tilted relative to a front-back direction of the vehicle, and the second end plate is provided at forward and upper position relative to the first end plate in the vehicle,

the heat radiator is provided at a forward position relative to the second end plate and along the second end plate in the vehicle, and

the first compressor is fixed at total of three or more points to both the first and second end plates below the fuel cell stack, wherein

the step (a) comprises:

preparing the first and second end plates respectively having one straight line side in at least a portion,

aligning the plurality of cells and the first and second end plates in a stacking sequence, while placing the first and second end plates on a same plane in an orientation in which each of the one sides of the first and second end plates is at a bottom, and

joining the plurality of cells and the first and second end plates to constitute the fuel cell stack, and

the step (b) comprises

supporting the fuel cell stack at a different side from the one side of the first and second end plates, and

fixing the first compressor to the first and second end plates so as to be in contact with each of the one sides of the first and second end plates.

【書類名】　手続補正書
【整理番号】　PHN65904
【提出日】　平成23年 9月22日
【あて先】　特許庁長官　岩井　良行　殿
【事件の表示】
　【出願番号】　特願2011-521031
【補正をする者】
　【識別番号】　000003207
　【氏名又は名称】　トヨタ自動車株式会社
【代理人】
　【識別番号】　110000028
　【氏名又は名称】　特許業務法人　明成国際特許事務所
　【代表者】　下出　隆史
　【電話番号】　052-218-5061
　【連絡先】　担当は堀研一
【発送番号】　491523
【手続補正1】
　【補正対象書類名】　特許請求の範囲
　【補正対象項目名】　全文
　【補正方法】　変更
　【補正の内容】
　　【書類名】特許請求の範囲
　　【請求項１】
車両に燃料電池を搭載するための構造であって、
　　積層された複数のセルと、前記複数のセルの積層方向の両端に配される第１および第２のエンドプレートと、を有する燃料電池スタックと、
　　前記燃料電池スタックに酸化ガスを供給する第１のコンプレッサと、
　　前記燃料電池スタック内を循環する冷却媒体を冷却するための平板状の放熱器と、を備え、
前記燃料電池スタックは、前記車両の前後方向に対して前記複数のセルの前記積層方向が傾いた姿勢であって、前記第１のエンドプレートよりも前記車両の前方であってかつ上方に前記第２のエンドプレートが位置する姿勢で、配され、
前記放熱器は、前記第２のエンドプレートよりもさらに前記車両の前方の位置に、前記第２のエンドプレートに沿って配され、
前記第１のコンプレッサは、前記燃料電池スタックの下方において、前記第１と第２のエンドプレートの両方に対して合計で３点以上の点で固定される、構造。
　　【請求項２】
請求項１記載の構造であって、さらに、
前記車両の室内の温度を調節するための第２のコンプレッサであって、上下方向の寸法が前記第１のコンプレッサより小さい第２のコンプレッサを備え、
前記第２のコンプレッサは、前記燃料電池スタックの下方であって、前記第１のコンプレッサよりも後方に配される、構造。
　　【請求項３】
請求項１または２記載の構造であって、さらに、
前記第１および第２のエンドプレートの少なくとも一方を覆う防水ケースを備え、
前記防水ケースは、
　　前記防水ケースが覆う前記エンドプレートと、前記第１のコンプレッサとを相互に固定する固定部材を通すための穴と、
　　前記穴の周りを囲み、前記防水ケースが覆う前記エンドプレートの側または前記第１のコンプレッサの側に突出する突出部であって、弾性を有し、前記防水ケースが覆う前

記エンドプレートと、前記第１のコンプレッサとが前記固定部材によって固定された状態において、前記突出する側の端部が前記エンドプレートまたは前記第１のコンプレッサと接する突出部と、を備える、構造。

【請求項４】

車両に燃料電池を搭載する方法であって、

（ａ）積層された複数のセルと、前記複数のセルの積層方向の両端に配される第１および第２のエンドプレートと、を有する燃料電池スタックと、

前記燃料電池スタックに酸化ガスを供給する第１のコンプレッサと、

前記燃料電池スタック内を循環する冷却媒体を冷却するための平板状の放熱器と、を準備する工程と、

（ｂ）前記燃料電池スタックと前記第１のコンプレッサと前記放熱器とを前記車両に取りつける工程であって、

前記燃料電池スタックが、前記車両の前後方向に対して前記複数のセルの前記積層方向が傾いた姿勢であって、前記第１のエンドプレートよりも前記車両の前方であって、かつ上方に前記第２のエンドプレートが位置するように、配され、

前記放熱器が、前記第２のエンドプレートよりもさらに前記車両の前方の位置に、前記第２のエンドプレートに沿って配され、

前記第１のコンプレッサが、前記燃料電池スタックの下方において、前記第１と第２のエンドプレートの両方に対して合計で３点以上の点で固定されるように、前記燃料電池スタックと前記第１のコンプレッサと前記放熱器とを前記車両に取りつける工程と、を備え、

前記工程（ａ）は、

それぞれ直線状の１辺を少なくとも一部に有する前記第１および第２のエンドプレートを準備する工程と、

前記第１および第２のエンドプレートの前記１辺がそれぞれ下になる姿勢で、前記第１および第２のエンドプレートを同一の平面の上に配しつつ、前記複数のセルと前記第１および第２のエンドプレートとを前記積層の順序で並べる工程と、

前記複数のセルならびに前記第１および第２のエンドプレートを結合して前記燃料電池スタックを構成する工程と、を備え、

前記工程（ｂ）は、

前記第１および第２のエンドプレートの前記１辺とは異なる部位で前記燃料電池スタックを支持し、前記第１および第２のエンドプレートの前記１辺に接するように、前記第１のコンプレッサを前記第１および第２のエンドプレートに対して固定する工程を含む、方法。

【手続補正2】

【補正対象書類名】　明細書

【補正対象項目名】　００６３

【補正方法】　変更

【補正の内容】

【００６３】

また、本実施例においては、燃料電池スタック１００の後方に配される水素ポンプ６１０および冷却液ポンプ６２０のモータ、ならびに燃料電池スタック１００の下方に配されるエアコンプレッサ８１０，８２０のモータを制御するインバータユニット８３０が、燃料電池スタック１００の側面に配される。このため、各モータとインバータユニット８３０とを結ぶ電気の配線ｅｗを短くすることができる。その結果、図１の構成全体の大きさを小さくすることができ、かつ重量を低減することができる。また、電気配線ｅｗを短くするため、電気配線ｅｗが断線する可能性を低減することもできる。

【手続補正3】
【補正対象書類名】　図面
【補正対象項目名】　図１
【補正方法】　変更
【補正の内容】
【図１】

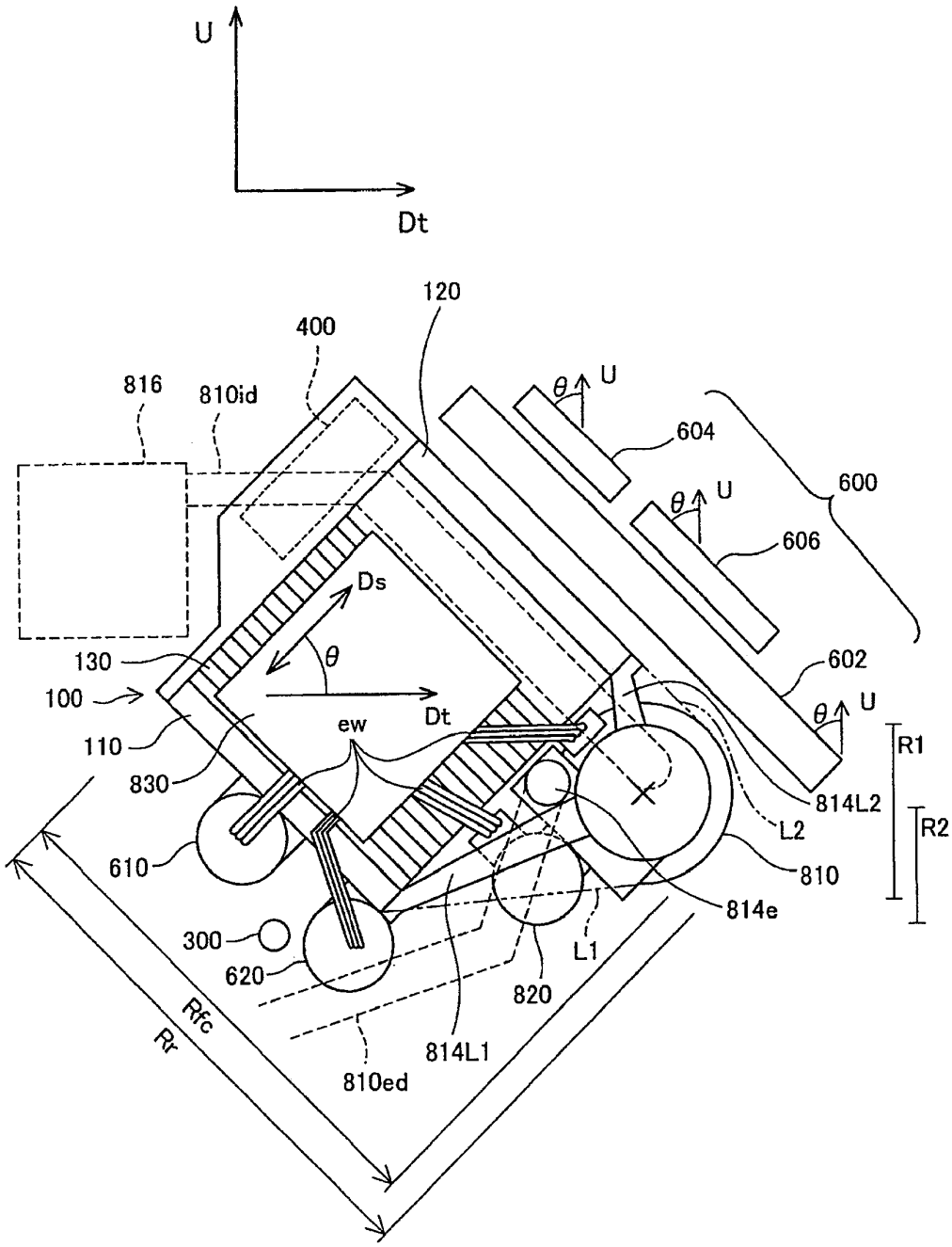

【手続補正4】
　【補正対象書類名】　図面
　【補正対象項目名】　図２
　【補正方法】　変更
　【補正の内容】
　　【図２】

UNITED STATES PATENT AND TRADEMARK OFFICE

Commissioner for Patents
United States Patent and Trademark Office
P.O. Box 1450
Alexandria, VA 22313-1450
www.uspto.gov

MAILED

SEP 12 2011

PCT LEGAL ADMINISTRATION

E I DU PONT DE NEMOURS AND COMPANY
LEGAL PATENT RECORDS CENTER
BARLEY MILL PLAZA 25/1125
4417 LANCASTER PIKE
WILMINGTON DE 19805

In re Application of	:	
ZHANG et al.	:	
Application No.: 13/144,103	:	DECISION on
PCT No.: PCT/US10/20033	:	
Int. Filing Date: 04 January 2010	:	PETITION
Priority Date: 02 January 2009	:	
Attorney Docket No.: FA1849USPCT	:	UNDER 37 CFR 1.137(b)
For: CORROSION RESISTANCE EVALUATOR	:	

The petition to revive under 37 CFR 1.137(b) filed 12 July 2011 in the above-captioned application is hereby **GRANTED** as follows:

Applicant's statement that "the entire delay in filing the required reply from the due date for the required reply until the filing of a grantable petition under 37 CFR 1.137(b) was unintentional" meets the requirements of 37 CFR 1.137(b)(3).

A review of the application file reveals that the basic national fee has now been provided. The required petition fee of $1620 was also paid. Thus, the requirements of 37 CFR 1.137(b) have been satisfied. Therefore, the request to revive the application abandoned under 35 U.S.C. 371(d) is granted as to the National stage in the United States of America.

The application will be forwarded to the United States Designated/Elected Office for further processing. The 35 U.S.C. 371(c)(1), (c)(2) and (c)(4) date is 12 July 2011.

/Cynthia M. Kratz/
Cynthia M. Kratz
Attorney Advisor
PCT Legal Office
Office of PCT Legal Administration
Telephone: (571) 272-3286

UNITED STATES PATENT AND TRADEMARK OFFICE

Commissioner for Patents
United States Patent and Trademark Office
P.O. Box 1450
Alexandria, VA 22313-1450
www.uspto.gov

MAILED

NOV 09 2011

PCT LEGAL ADMINISTRATION

YOUNG & THOMPSON
209 Madison Street
Suite 500
Alexandria VA 22314

In re Application of:
MALMQVIST, Johan, et al.
U.S. Application No.: 13/144,104
PCT No.: PCT/SE2010/050036
International Filing Date: 14 January 2010
Priority Date: 19 January 2009
Attorney's Docket No.: 1515-1147
For: METHOD FOR SPECTROMETRY FOR INVESTIGATING SAMPLES CONTAINING AT LEAST TWO ELEMENTS

DECISION ON PETITION UNDER 37 CFR 1.47(a)

This decision is issued in response to applicants' "PETITION UNDER 37 C.F.R. § 1.47(a)" filed 20 October 2011. Applicants have paid the required petition fee.

BACKGROUND

On 14 January 2010, applicants filed international application PCT/SE2010/050036. The international application claimed a priority date of 19 January 2009, and it designated the United States. On 22 July 2010, the International Bureau (IB) communicated a copy of the international application to the United States Patent and Trademark Office (USPTO). The deadline for submission of the basic national fee was thirty months from the priority date, i.e., 19 July 2011.

On 12 July 2011, applicants filed a Transmittal Letter for entry into the national stage in the United States accompanied by, among other materials, payment of the basic national fee.

On 27 July 2011, the United States Designated/Elected Office (DO/EO/US) mailed a Notification Of Missing Requirement (Form PCT/DO/EO/905) requiring submission of an oath or declaration in compliance with 37 CFR 1.497 and the surcharge for filing the oath or declaration later than thirty months after the priority date.

On 20 October 2011, applicants filed a response to the Notification Of Missing Requirements (with required extension fee). The response included payment of the required surcharge, a declaration executed by four of the five inventors of record, and the petition under 37 CFR 1.47(a) considered herein. The petition seeks acceptance of the application without the signature of non-signing co-inventor Johan MALMQVIST, whom applicants assert has refused to execute the application.

DISCUSSION

A grantable petition under 37 CFR 1.47(a) must be accompanied by: (1) the fee under 37 CFR 1.17; (2) a statement of the last known address of the non-signing inventor; (3) an oath or declaration executed by the other inventors on behalf of themselves and the non-signing inventor; and (4) factual proof that the inventor refuses to execute the application or cannot be reached after diligent effort.

Applicants here have provided the required petition fee, and the petition states the last known address of the non-signing inventor. Items (1) and (2) are therefore satisfied.

Regarding item (3), section 409.03(a) of the Manual of Patent Examining Procedure (MPEP) states that:

> An oath or declaration signed by all the available joint inventors with the signature block of the nonsigning inventor(s) left blank may be treated as having been signed by all the joint inventors on behalf of the nonsigning inventor(s), unless otherwise indicated.

Here, applicants have filed a declaration executed by four of the five inventors of record, and the declaration includes an unsigned signature block for the non-signing co-inventor, Johan MALMQVIST. This declaration may be accepted as having been executed by the signing inventors on their own behalf and on behalf of the non-signing inventor. Accordingly, item (3) of a grantable petition is satisfied.

Regarding item (4), MPEP section 409.03(d)(II) states that, before it can be concluded that an inventor has refused to execute the application papers, "[a] copy of the application papers should be sent to the last known address of the nonsigning inventor, or, if the nonsigning inventor is represented by counsel, to the address of the nonsigning inventor's attorney." The MPEP also states the following:

> Where a refusal of the inventor to sign the application papers is alleged, the circumstances of the presentation of the application papers and of the refusal must be specified in a statement of facts by the person who presented the inventor with the application papers and/or to whom the refusal was made. Statements by a party not present when an oral refusal is made will not be accepted.

Here, applicants have provided a firsthand statement, with supporting documents, providing an acceptable showing that a written request for signature accompanied by a copy of the complete application was delivered to the non-signing inventor at his last known address via registered mail and that the inventor failed to provide the requested signature in response to such request. These materials provide an acceptable showing that the non-signing inventor has refused to execute the application. Item (4) is therefore satisfied.

Based on the above, applicants have satisfied all the requirements for a grantable petition under 37 CFR 1.47(a).

CONCLUSION

Applicants' petition under 37 CFR 1.47(a) is **GRANTED**.

The application is accepted without the signature of non-signing co-inventor Johan MALMQVIST.

A notice of the acceptance of the application will be published in the Official Gazette, and a letter informing the non-signing inventor of the application will be forwarded to the inventor's last-known address, as set forth in the petition.

The application is being referred to the National Stage Processing Branch of the Office of PCT Operations for further processing in accordance with this decision. The date under 35 U.S.C. 371(c)(1), (c)(2), and (c)(4) is 20 October 2011.

/RichardMRoss/

Richard M. Ross
Attorney Advisor
Office of PCT Legal Administration
Telephone: (571) 272-3296

UNITED STATES PATENT AND TRADEMARK OFFICE

Commissioner for Patents
United States Patent and Trademark Office
P.O. Box 1450
Alexandria, VA 22313-1450
www.uspto.gov

MAILED

NOV 09 2011

PCT LEGAL ADMINISTRATION

Johan MALMQVIST
Morogatan 28E
S-931 39 Skellefteå
SWEDEN

In re Application of: MALMQVIST, Johan, et al.
U.S. Application No.: 13/144,104
PCT No.: PCT/SE2010/050036
International Filing Date: 14 January 2010
Priority Date: 19 January 2009
Attorney's Docket No.: 1515-1147
For: METHOD FOR SPECTROMETRY FOR INVESTIGATING SAMPLES CONTAINING AT LEAST TWO ELEMENTS

Dear Johan MALMQVIST:

You are identified as an inventor in the above identified United States patent application, filed under the provisions of 37 CFR 1.47(a) and 35 U.S.C. 116. Should a patent be granted, you will be designated as an inventor.

As a named inventor, you are entitled to inspect any paper in the file wrapper of the application, order copies of all or any part thereof (at a prepaid cost per 37 CFR 1.19) or to make your position of record in the application. Alternatively, you may arrange to do any of the preceding through a registered patent agent or attorney presenting written authorization from you. If you care to join the application, counsel of record (see below) would presumably assist you. Joining in the application would entail the filing of an appropriate oath or declaration by you pursuant to 37 CFR 1.63.

/RichardMRoss/

Richard M. Ross
Attorney Advisor
Office of PCT Legal Administration
Telephone: (571) 272-3296

Counsel Of Record:
Benoit Castel
YOUNG & THOMPSON
209 Madison Street
Suite 500
Alexandria VA 22314

PTO/SB/20PCT-JP (05-10)
Approved for use through 01/31/2012. OMB 0651-0058
U.S. Patent and Trademark Office; U. S. DEPARTMENT OF COMMERCE
Under the Paperwork Reduction Act of 1995, no persons are required to respond to a collection of information unless it displays a valid OMB control number.

REQUEST FOR PARTICIPATION IN THE PATENT COOPERATION TREATY - PATENT PROSECUTION HIGHWAY (PCT-PPH) PILOT PROGRAM BETWEEN THE JAPAN PATENT OFFICE (JPO) AND THE USPTO

Application No:	13/144114	Filing date:	July 12, 2011
First Named Inventor:	Reiji Miyahara		
Title of the Invention:	Production Method Of Fine O/W Emulsion Externnal Preparation		

THIS REQUEST FOR PARTICIPATION IN THE PCT-PPH PILOT PROGRAM ALONG WITH THE REQUIRED DOCUMENTS MUST BE SUBMITTED VIA EFS-WEB. INFORMATION REGARDING EFS-WEB IS AVAILABLE AT HTTP://WWW.USPTO.GOV/EBC/EFS_HELP.HTML

APPLICANT HEREBY REQUESTS PARTICIPATION IN THE PCT-PPH PROGRAM AND PETITIONS TO MAKE THE ABOVE-IDENTIFIED APPLICATION SPECIAL UNDER THE PCT-PPH PROGRAM.

The above-identified application is (1) a national stage entry of the corresponding PCT application, or (2) a national stage entry of another PCT application which claims priority to the corresponding PCT application, or (3) a national application that claims domestic/ foreign priority to the corresponding PCT application, or (4) a national application which forms the basis for the priority claim in the corresponding PCT application, or (5) a continuing application of a U.S. application that satisfies one of (1) to (4) above, or (6) a U.S. application that claims domestic benefit to a U.S. provisional application which forms the basis for the priority claim in the corresponding PCT application.

The corresponding PCT application number(s) is/are: PCT/JP2010/050341

The international date of the corresponding PCT application(s) is/are: January 14, 2010; We are not surrendering any claim for priority

I. List of Required Documents:

a. **A copy of the latest international work product (WO/ISA, WO/IPEA, or IPER) in the above–identified corresponding PCT application(s)**

☐ Is attached.

☑ Is not attached because the document is already in the U.S. application.

b. **A copy of all claims which were indicated as having novelty, inventive step and industrial applicability in the above-identified corresponding PCT application(s).**

☑ Is attached.

☐ Is not attached because the document is already in the U.S. application.

c. **English translations of the documents in a. and b. above are attached (if the documents are not in the English language). A statement that the English translation is accurate is attached for the document in b. above.**

This collection of information is required by 35 U.S.C. 119, 37 CFR 1.55, and 37 CFR 1.102(d). The information is required to obtain or retain a benefit by the public, which is to file (and by the USPTO to process) an application. Confidentiality is governed by 35 U.S.C. 122 and 37 CFR 1.11 and 1.14. This collection is estimated to take 2 hours to complete, including gathering, preparing, and submitting the completed application form to the USPTO. Time will vary depending upon the individual case. Any comments on the amount of time you require to complete this form and/or suggestions for reducing this burden should be sent to the Chief Information Officer, U.S. Patent and Trademark Office, U.S. Department of Commerce, P.O. Box 1450, Alexandria, VA 22313-1450. DO NOT SEND FEES OR COMPLETED FORMS TO THIS ADDRESS.

Approved for use through 01/31/2012. OMB 0651-0058
U.S.Patent and Trademark Office; U.S. DEPARTMENT OF COMMERCE

Under the Paperwork Reduction Act of 1995, no persons are required to respond to a collection of information unless it displays a valid OMB control number.

REQUEST FOR PARTICIPATION IN THE PCT-PPH PILOT PROGRAM BETWEEN THE JPO AND THE USPTO

(continued)

Application No.:	13/144114
First Named Inventor:	Reiji Miyahara

d. **(1) An information disclosure statement listing the documents cited in the international work products (ISR, WO/ISA, WO/IPEA, IPER) of the corresponding PCT application.**

☐ Is attached

☑ Has already been filed in the above-identified U.S. application on September 29, 2011

(2) Copies of all documents (except) for U.S. patents or U.S. patent application publications)

☐ Are attached.

☑ Have already been filed in the above-identified U.S. application on September 29, 2011

II. Claims Correspondence Table:

Claims in US Application	Patentable Claims in the corresponding PCT Application	Explanation regarding the correspondence
1	1	The claims sufficiently correspond.
2	2	The claims sufficiently correspond.
3	3	The claims sufficiently correspond.
4	4	The claims sufficiently correspond.
5	5	The claims sufficiently correspond.
6	6	The claims sufficiently correspond.
7	7	The claims sufficiently correspond.

III. All the claims in the US application sufficiently correspond to the patentable claims in the corresponding PCT application.

Signature	Date 11/4/11
Name (Print/Typed) Kenneth A. Clark	Registration Number 32119

Statement

I, Michiyo ARII, a technical translator to Iwahashi & Associates, do solemnly and sincerely declare:

1. that I am fully conversant with the Japanese and English languages;

2. that the attached document is a copy of all claims which were indicated as having novelty, inventive step and industrial applicability in the PCT/JP2010/050341;

3. that the attached document is accurate English language translation made by me of all claims which were indicated as having novelty, inventive step and industrial applicability in the PCT/JP2010/050341; and

4. that I make this solemn declaration conscientiously believing the same to be true and correct.

Declared in Kanagawa, Japan

This 7 day of October, 2011

Michiyo ARII

<English Translation of Patentable Claims of PCT/JP2010/050341>

1. A production method of a fine O/W emulsion external preparation having the emulsion particle size of 50 to 500 nm comprising the steps of:

mixing with stirring, at 70 to 80 °C,

(A) a hydrophilic nonionic surfactant,

(B) a linear higher alcohol having 16 or more carbon atoms,

(C) an oil component,

(D) an aqueous solvent which can be soluble in water, wherein the critical micelle concentration (c.m.c.) of the hydrophilic nonionic surfactant in the aqueous solvent is higher than that in water, and

(E) water in the amount of 5 to 25 weight % of the total amount of (A) to (E), to prepare a W/O emulsion; and

adding, while mixing with stirring, (F) water or an aqueous formulation at 10 to 35 °C into the W/O emulsion to invert the W/O emulsion to a fine O/W emulsion.

2. The production method of a fine O/W emulsion external preparation according to claim 1, wherein the HLB of (A) the hydrophilic nonionic surfactant is 8 or higher.

3. The production method of a fine O/W emulsion external preparation according to claim 1 or 2, wherein the mass ratio of (A) the hydrophilic nonionic surfactant and (B) the linear higher alcohol having 16 or more carbon atoms is 3:7 to 7:3.

4. The production method of a fine O/W emulsion external preparation according to any of claims 1 to 3, wherein (C) the oil component is 1 to 40 mass % in the W/O emulsion.

5. The production method of a fine O/W emulsion external preparation according to any of claims 1 to 4, wherein (D) the aqueous solvent is 5 mass % or higher in the W/O emulsion.

6. The production method of a fine O/W emulsion external preparation according to any of claims 1 to 5, wherein (D) the aqueous solvent has three or less hydroxyl groups in the molecule.

7. The production method of a fine O/W emulsion external preparation according to claim 6, wherein (D) the aqueous solvent is one or more selected from the group consisting of polypropylene glycol polyethylene glycol copolymer or its dimethyl ether, polyethylene glycol or its alkyl ethers, dipropylene glycol, isoprene glycol, and propylene glycol.

請求の範囲

[請求項1] （Ａ）親水性非イオン性界面活性剤と、

（Ｂ）炭素数１６以上の直鎖状高級アルコールと、

（Ｃ）油分と、

（Ｄ）水に溶解する水性溶媒であって、該水性溶媒中における前記親水性非イオン性界面活性剤の臨界ミセル濃度（ｃ．ｍ．ｃ）が水中におけるそれよりも高い水性溶媒と、

（Ｅ）（Ａ）～（Ｅ）全量中５～２５重量%の水と、

を７０～８０℃で混合攪拌して、Ｗ／Ｏエマルションを調製するＷ／Ｏエマルション調製工程と、

該Ｗ／Ｏエマルション中に、１０～３５℃の

（Ｆ）水または水性処方

を混合攪拌しながら添加してＯ／Ｗ微細エマルションに転相させるＯ／Ｗ微細エマルション調製工程と、

を備えることを特徴とする乳化粒子径５０～５００ｎｍのＯ／Ｗ微細エマルション外用剤の製造方法。

[請求項2] 請求項１に記載のＯ／Ｗ微細エマルション外用剤の製造方法において、（Ａ）親水性非イオン性界面活性剤のＨＬＢが８以上であることを特徴とするＯ／Ｗ微細エマルション外用剤の製造方法。

[請求項3] 請求項１又は２に記載のＯ／Ｗ微細エマルション外用剤の製造方法において、（Ａ）親水性非イオン性界面活性剤と（Ｂ）炭素数１６以上の直鎖状高級アルコールの質量比が３：７～７：３であることを特徴とするＯ／Ｗ微細エマルション外用剤の製造方法。

[請求項4] 請求項１～３のいずれかに記載のＯ／Ｗ微細エマルション外用剤の製造方法において、（Ｃ）油分の配合量が前記Ｗ／Ｏエマルション中１～４０質量%であることを特徴とするＯ／Ｗ微細エマルション外用剤の製造方法。

[請求項5] 請求項１～４のいずれかに記載のＯ／Ｗ微細エマルション外用剤の

製造方法において、（Ｄ）水性溶媒の配合量が前記Ｗ／Ｏエマルション中５質量%以上であることを特徴とするＯ／Ｗ微細エマルション外用剤の製造方法。

[請求項6] 請求項１～５のいずれかに記載のＯ／Ｗ微細エマルション外用剤の製造方法において、（Ｄ）水性溶媒が分子内に３個以下の水酸基を有する水性溶媒であることを特徴とするＯ／Ｗ微細エマルション外用剤の製造方法。

[請求項7] 請求項６に記載のＯ／Ｗ微細エマルション外用剤の製造方法において、（Ｄ）水性溶媒がポリプロピレングリコール・ポリエチレングリコール共重合体又はそのジメチルエーテル、ポリエチレングリコール又はそのアルキルエーテル、ジプロピレングリコール、イソプレングリコール、プロピレングリコールの中から選択される１種以上であることを特徴とするＯ／Ｗ微細エマルション外用剤の製造方法。

PTO/SB/20PCT-KR (06-10)
Approved for use through 01/31/2012. OMB 0651-0058
U.S. Patent and Trademark Office; U.S. DEPARTMENT OF COMMERCE
Under the Paperwork Reduction Act of 1995, no persons are required to respond to a collection of information unless it displays a valid OMB control number.

REQUEST FOR PARTICIPATION IN THE PATENT COOPERATION TREATY - PATENT PROSECUTION HIGHWAY (PCT-PPH) PILOT PROGRAM BETWEEN THE KOREAN INTELLECTUAL PROPERTY OFFICE (KIPO) AND THE USPTO

Application No:		Filing date:	
First Named Inventor:	Miller, David		
Title of the Invention:	Method of Producing Biodiesel With Supercritical Alcohol and Apparatus for Same		

THIS REQUEST FOR PARTICIPATION IN THE PCT-PPH PILOT PROGRAM ALONG WITH THE REQUIRED DOCUMENTS MUST BE SUBMITTED VIA EFS-WEB. INFORMATION REGARDING EFS-WEB IS AVAILABLE AT HTTP://WWW.USPTO.GOV/EBC/EFS_HELP.HTML

APPLICANT HEREBY REQUESTS PARTICIPATION IN THE PCT-PPH PROGRAM AND PETITIONS TO MAKE THE ABOVE-IDENTIFIED APPLICATION SPECIAL UNDER THE PCT-PPH PROGRAM.

The above-identified application is (1) a national stage entry of the corresponding PCT application, or (2) a national stage entry of another PCT application which claims priority to the corresponding PCT application, or (3) a national application that claims domestic/ foreign priority to the corresponding PCT application, or (4) a national application which forms the basis for the priority claim in the corresponding PCT application, or (5) a continuing application of a U.S. application that satisfies one of (1) to (4) above, or (6) a U.S. application that claims domestic benefit to a U.S. provisional application which forms the basis for the priority claim in the corresponding PCT application.

The corresponding PCT application number(s) is/are: PCT/US2010/22722

The international filing date of the corresponding PCT application(s) is/are: 2010-02-01

I. List of Required Documents:

a. **A copy of the latest international work product (WO/ISA, WO/IPEA, or IPER) in the above–identified corresponding PCT application(s)**

☑ Is attached.

☐ Is not attached because the document is already in the U.S. application.

b. **A copy of all claims which were indicated as having novelty, inventive step and industrial applicability in the above-identified corresponding PCT application(s).**

☐ Is attached.

☑ Is not attached because the document is already in the U.S. application.

c. **English translations of the documents in a. and b. above are attached (if the documents are not in the English language). A statement that the English translation is accurate is attached for the document in b. above.**

This collection of information is required by 35 U.S.C. 119, 37 CFR 1.55, and 37 CFR 1.102(d). The information is required to obtain or retain a benefit by the public, which is to file (and by the USPTO to process) an application. Confidentiality is governed by 35 U.S.C. 122 and 37 CFR 1.11 and 1.14. This collection is estimated to take 2 hours to complete, including gathering, preparing, and submitting the completed application form to the USPTO. Time will vary depending upon the individual case. Any comments on the amount of time you require to complete this form and/or suggestions for reducing this burden should be sent to the Chief Information Officer, U.S. Patent and Trademark Office, U.S. Department of Commerce, P.O. Box 1450, Alexandria, VA 22313-1450. DO NOT SEND FEES OR COMPLETED FORMS TO THIS ADDRESS.

Approved for use through 01/31/2012. OMB 0651-0058
U.S.Patent and Trademark Office; U.S. DEPARTMENT OF COMMERCE
Under the Paperwork Reduction Act of 1995, no persons are required to respond to a collection of information unless it displays a valid OMB control number.

REQUEST FOR PARTICIPATION IN THE PCT-PPH PILOT PROGRAM BETWEEN THE KIPO AND THE USPTO

(continued)

Application No.:	
First Named Inventor:	Miller, David

d. **(1) An information disclosure statement listing the documents cited in the international work products (ISR, WO/ISA, WO/IPEA, IPER) of the corresponding PCT application.**

- [✓] Is attached
- [ ] Has already been filed in the above-identified U.S. application on _____

(2) Copies of all documents (except) for U.S. patents or U.S. patent application publications)

- [✓] Are attached.
- [ ] Have already been filed in the above-identified U.S. application on _____

II. Claims Correspondence Table:

Claims in US Application	Patentable Claims in the corresponding PCT Application	Explanation regarding the correspondence
1 - 18	1 - 18	Claims are identical to claims in PCT/US2010/022722

III. All the claims in the US application sufficiently correspond to the patentable claims in the corresponding PCT application.

Signature /Patricia M. Mathers/	Date 12 JULY 2011
Name (Print/Typed) Patricia M. Mathers	Registration Number 44906

UNITED STATES PATENT AND TRADEMARK OFFICE

UNITED STATES DEPARTMENT OF COMMERCE
United States Patent and Trademark Office
Address: COMMISSIONER FOR PATENTS
P.O. Box 1450
Alexandria, Virginia 22313-1450
www.uspto.gov

APPLICATION NO.	FILING DATE	FIRST NAMED INVENTOR	ATTORNEY DOCKET NO.	CONFIRMATION NO.
13/144,125	07/12/2011	David Miller	11-072	2974

24124 7590 10/31/2011
BOHAN MATHERS
PO BOX 17707
PORTLAND, ME 04112-8707

EXAMINER

ART UNIT	PAPER NUMBER
1771	

NOTIFICATION DATE	DELIVERY MODE
10/31/2011	ELECTRONIC

Please find below and/or attached an Office communication concerning this application or proceeding.

The time period for reply, if any, is set in the attached communication.

Notice of the Office communication was sent electronically on above-indicated "Notification Date" to the following e-mail address(es):

PMM@ BOHANMATHERS.COM
peter@bohanmathers.com

UNITED STATES PATENT AND TRADEMARK OFFICE

Commissioner for Patents
United States Patent and Trademark Office
P.O. Box 1450
Alexandria, VA 22313-1450
www.uspto.gov

CT

10/31/11

In re application of David Miller Serial No. 13/144,125 Filed: July 12, 2011 For: METHOD OF PRODUCING BIODIESEL WITH SUPERCRITICAL ALCOHOL	: : : : : : :	DECISION ON REQUEST TO PARTICIPATE IN PATENT PROSECUTION HIGHWAY PROGRAM AND PETITION TO MAKE SPECIAL UNDER 37 CFR 1.102(a)

This is a decision on the request to participate in the PCT Patent Prosecution Highway (PCT-PPH) pilot program and the petition under 37 CFR 1.102(a), filed July 12, 2011, to make the above-identified application special.

The request and petition are **GRANTED**.

A grantable request to participate in the PCT-PPH pilot program and petition to make special require:

(1) The U.S. application must disclose an eligible relationship to one or more PCT applications where the ISA or IPEA are the JPO, EPO, USPTO or KIPO;

(2) At least one claim in the PCT application has novelty, inventive step, and industrial applicability and must be free of any observations in Box VIII in the latest work product in the international stage or applicant must identify and explain why the claim(s) is/are not subject to the observation in Box VIII;

(3) Applicant must submit a copy of the claim(s) from the PCT application(s) that have novelty, inventive step, and industrial applicability along with an English translation thereof and a statement that the English translation is accurate, if the claims are not in the English language;

(4) Applicant must submit a claims correspondence table in English and all the independent claims in the U.S. application must sufficiently correspond or be amended to sufficiently correspond to the claim(s) that have novelty, inventive step, and industrial applicability in the PCT application(s);

(5) Examination of the U.S. application has not begun;

(6) Applicant must submit a copy of the latest international work product from the PCT application indicating that the claim(s) have novelty, inventive step, and industrial applicability along with an English translation thereof if the latest international work product is not in the English language; and

(7) Applicant must submit an IDS listing the documents cited by the PCT examiner in the international work product along with copies of documents except U.S. patents or U.S. patent application publications.

The request to participate in the PPH program and petition comply with the above requirements. Accordingly, the above-identified application has been accorded "special" status.

The application is being forwarded to the examiner for action on the merits commensurate with this decision.

Any inquiry regarding this decision should be directed to Christine Tierney, Quality Assurance Specialist, at (571) 272-1055.

All other inquiries concerning the examination or status of the application is accessible in the PAIR system at http://www.uspto.gov/ebc/index.html.

/Christine Tierney/

Christine Tierney
Quality Assurance Specialist
Technology Center 1700

PTO/SB/20PCT-KR (06-10)
Approved for use through 01/31/2012. OMB 0651-0058
U.S. Patent and Trademark Office; U. S. DEPARTMENT OF COMMERCE
Under the Paperwork Reduction Act of 1995, no persons are required to respond to a collection of information unless it displays a valid OMB control number.

REQUEST FOR PARTICIPATION IN THE PATENT COOPERATION TREATY - PATENT PROSECUTION HIGHWAY (PCT-PPH) PILOT PROGRAM BETWEEN THE KOREAN INTELLECTUAL PROPERTY OFFICE (KIPO) AND THE USPTO

Application No:	13/144,152	Filing date:	9/20/2011
First Named Inventor:	Vinod M. Menon		
Title of the Invention:	Flexible Microcavities Through Spin Coating		

THIS REQUEST FOR PARTICIPATION IN THE PCT-PPH PILOT PROGRAM ALONG WITH THE REQUIRED DOCUMENTS MUST BE SUBMITTED VIA EFS-WEB. INFORMATION REGARDING EFS-WEB IS AVAILABLE AT HTTP://WWW.USPTO.GOV/EBC/EFS_HELP.HTML

APPLICANT HEREBY REQUESTS PARTICIPATION IN THE PCT-PPH PROGRAM AND PETITIONS TO MAKE THE ABOVE-IDENTIFIED APPLICATION SPECIAL UNDER THE PCT-PPH PROGRAM.

The above-identified application is (1) a national stage entry of the corresponding PCT application, or (2) a national stage entry of another PCT application which claims priority to the corresponding PCT application, or (3) a national application that claims domestic/ foreign priority to the corresponding PCT application, or (4) a national application which forms the basis for the priority claim in the corresponding PCT application, or (5) a continuing application of a U.S. application that satisfies one of (1) to (4) above, or (6) a U.S. application that claims domestic benefit to a U.S. provisional application which forms the basis for the priority claim in the corresponding PCT application.

The corresponding PCT application number(s) is/are: PCT/US2010/020924

The international filing date of the corresponding PCT application(s) is/are: January 13, 2010

I. List of Required Documents:

a. **A copy of the latest international work product (WO/ISA, WO/IPEA, or IPER) in the above–identified corresponding PCT application(s)**

- [x] Is attached.
- [ ] Is not attached because the document is already in the U.S. application.

b. **A copy of all claims which were indicated as having novelty, inventive step and industrial applicability in the above-identified corresponding PCT application(s).**

- [x] Is attached.
- [ ] Is not attached because the document is already in the U.S. application.

c. **English translations of the documents in a. and b. above are attached (if the documents are not in the English language). A statement that the English translation is accurate is attached for the document in b. above.**

This collection of information is required by 35 U.S.C. 119, 37 CFR 1.55, and 37 CFR 1.102(d). The information is required to obtain or retain a benefit by the public, which is to file (and by the USPTO to process) an application. Confidentiality is governed by 35 U.S.C. 122 and 37 CFR 1.11 and 1.14. This collection is estimated to take 2 hours to complete, including gathering, preparing, and submitting the completed application form to the USPTO. Time will vary depending upon the individual case. Any comments on the amount of time you require to complete this form and/or suggestions for reducing this burden should be sent to the Chief Information Officer, U.S. Patent and Trademark Office, U.S. Department of Commerce, P.O. Box 1450, Alexandria, VA 22313-1450. DO NOT SEND FEES OR COMPLETED FORMS TO THIS ADDRESS.

Approved for use through 01/31/2012. OMB 0651-0058
U.S.Patent and Trademark Office; U.S. DEPARTMENT OF COMMERCE
Under the Paperwork Reduction Act of 1995, no persons are required to respond to a collection of information unless it displays a valid OMB control number.

REQUEST FOR PARTICIPATION IN THE PCT-PPH PILOT PROGRAM BETWEEN THE KIPO AND THE USPTO

(continued)

Application No.:	13/144,152
First Named Inventor:	Vinod M. Menon

d. **(1) An information disclosure statement listing the documents cited in the international work products (ISR, WO/ISA, WO/IPEA, IPER) of the corresponding PCT application.**

☐ Is attached

☑ Has already been filed in the above-identified U.S. application on July 12, 2011

(2) Copies of all documents (except) for U.S. patents or U.S. patent application publications)

☐ Are attached.

☑ Have already been filed in the above-identified U.S. application on July 12, 2011

II. Claims Correspondence Table:

Claims in US Application	Patentable Claims in the corresponding PCT Application	Explanation regarding the correspondence
1	1	SAME
2	2	SAME
3	3	SAME
4	4	SAME
5	5	SAME
6	6	SAME
7	7	SAME
8	8	SAME
9	9	SAME
10	10	SAME
11	11	SAME
12	12	SAME
13	13	SAME
14	14	SAME
15	15	SAME
16	16	SAME
17	17	SAME
18	18	SAME

III. All the claims in the US application sufficiently correspond to the patentable claims in the corresponding PCT application.

Signature /Robert C. Sullivan, Jr./	Date 12/12/11
Name (Print/Typed) Robert C. Sullivan, Jr.	Registration Number 30,499

Privacy Act Statement

The **Privacy Act of 1974 (P.L. 93-579)** requires that you be given certain information in connection with your submission of the attached form related to a patent application or patent. Accordingly, pursuant to the requirements of the Act, please be advised that: (1) the general authority for the collection of this information is 35 U.S.C. 2(b)(2); (2) furnishing of the information solicited is voluntary; and (3) the principal purpose for which the information is used by the U.S. Patent and Trademark Office is to process and/or examine your submission related to a patent application or patent. If you do not furnish the requested information, the U.S. Patent and Trademark Office may not be able to process and/or examine your submission, which may result in termination of proceedings or abandonment of the application or expiration of the patent.

The information provided by you in this form will be subject to the following routine uses:

1. The information on this form will be treated confidentially to the extent allowed under the Freedom of Information Act (5 U.S.C. 552) and the Privacy Act (5 U.S.C 552a). Records from this system of records may be disclosed to the Department of Justice to determine whether disclosure of these records is required by the Freedom of Information Act.
2. A record from this system of records may be disclosed, as a routine use, in the course of presenting evidence to a court, magistrate, or administrative tribunal, including disclosures to opposing counsel in the course of settlement negotiations.
3. A record in this system of records may be disclosed, as a routine use, to a Member of Congress submitting a request involving an individual, to whom the record pertains, when the individual has requested assistance from the Member with respect to the subject matter of the record.
4. A record in this system of records may be disclosed, as a routine use, to a contractor of the Agency having need for the information in order to perform a contract. Recipients of information shall be required to comply with the requirements of the Privacy Act of 1974, as amended, pursuant to 5 U.S.C. 552a(m).
5. A record related to an International Application filed under the Patent Cooperation Treaty in this system of records may be disclosed, as a routine use, to the International Bureau of the World Intellectual Property Organization, pursuant to the Patent Cooperation Treaty.
6. A record in this system of records may be disclosed, as a routine use, to another federal agency for purposes of National Security review (35 U.S.C. 181) and for review pursuant to the Atomic Energy Act (42 U.S.C. 218(c)).
7. A record from this system of records may be disclosed, as a routine use, to the Administrator, General Services, or his/her designee, during an inspection of records conducted by GSA as part of that agency's responsibility to recommend improvements in records management practices and programs, under authority of 44 U.S.C. 2904 and 2906. Such disclosure shall be made in accordance with the GSA regulations governing inspection of records for this purpose, and any other relevant (*i.e.*, GSA or Commerce) directive. Such disclosure shall not be used to make determinations about individuals.
8. A record from this system of records may be disclosed, as a routine use, to the public after either publication of the application pursuant to 35 U.S.C. 122(b) or issuance of a patent pursuant to 35 U.S.C. 151. Further, a record may be disclosed, subject to the limitations of 37 CFR 1.14, as a routine use, to the public if the record was filed in an application which became abandoned or in which the proceedings were terminated and which application is referenced by either a published application, an application open to public inspection or an issued patent.
9. A record from this system of records may be disclosed, as a routine use, to a Federal, State, or local law enforcement agency, if the USPTO becomes aware of a violation or potential violation of law or regulation.

UNITED STATES PATENT AND TRADEMARK OFFICE

Commissioner for Patents
United States Patent and Trademark Office
P.O. Box 1450
Alexandria, VA 22313-1450
www.uspto.gov

FISH & RICHARDSON P.C. (NY)
P.O. BOX 1022
MINNEAPOLIS MN 55440-1022

MAILED
MAR 12 2012
OFFICE OF PETITIONS

In re Application of
Vinod M. **MENON**
Application No.: 13/144,152
Filed: September 20, 2011
Attorney Docket No.: 27541-0044US1
For: FLEXIBLE MICROCAVITIES THROUGH SPIN COATING

: DECISION ON REQUEST TO
: PARTICIPATE IN THE PATENT
: PROSECUTION HIGHWAY
: PROGRAM AND PETITION
: TO MAKE SPECIAL UNDER
: 37 CFR 1.102(a)

This is a decision on the request to participate in the PCT Patent Prosecution Highway (PCT-PPH) pilot program and the petition under 37 CFR 1.102(a), filed on December 12, 2011, to make the above-identified application special.

The request and petition are **GRANTED**.

Discussion

A grantable request to participate in the PCT-PPH pilot program and petition to make special require:

(1) The U.S. application must have an eligible relationship to one or more PCT applications where the ISA or IPEA are Australia, Austria, China, EPO, Finland, JPO, Korea, Nordic Patent Institute, Russia, Spain, Sweden, or USPTO;

(2) At least one claim in the PCT application has novelty, inventive step, and industrial applicability and must be free of any observations in Box VIII in the latest work product in the international stage or applicant must identify and explain why the claim(s) is/are not subject to the observation in Box VIII;

(3) Applicant must submit a copy of the claim(s) from the PCT application(s) that have novelty, inventive step, and industrial applicability along with an English translation thereof and statement that the English translation is accurate, if the claims are not in the English language;

(4) All the claims in the U.S. application must sufficiently correspond or be amended to sufficiently correspond to the claim(s) that have novelty, inventive step, and industrial applicability in the PCT application(s);

(5) Examination of the U.S. application has not begun;

(6) Applicant must submit a copy of the latest international work product from the PCT application indicating that the claim(s) have novelty, inventive step, and industrial applicability along with an English translation thereof and a statement that the English translation is accurate if the latest international work product is not in the English language;

(7) Applicant must submit an IDS listing the documents cited by the PCT examiner in the international work product along with copies of documents except U.S. patents or U.S. patent application publications.

The request to participate in the PCT-PPH pilot program and petition comply with the above requirements. Accordingly, the above-identified application has been accorded "special" status.

Telephone inquiries concerning this decision should be directed to Michelle R. Eason at 571-272-4231.

All other inquiries concerning the examination or status of the application is accessible in the PAIR system at http://www.uspto.gov/ebc.index.html.

This application will be forwarded to the examiner for action on the merits commensurate with this decision.

Thurman K. Page
Petitions Examiner
Office of Petitions

PTO/SB/20PCT-KR (06-10)
Approved for use through 01/31/2012. OMB 0651-0058
U.S. Patent and Trademark Office; U. S. DEPARTMENT OF COMMERCE
Under the Paperwork Reduction Act of 1995, no persons are required to respond to a collection of information unless it displays a valid OMB control number.

REQUEST FOR PARTICIPATION IN THE PATENT COOPERATION TREATY - PATENT PROSECUTION HIGHWAY (PCT-PPH) PILOT PROGRAM BETWEEN THE KOREAN INTELLECTUAL PROPERTY OFFICE (KIPO) AND THE USPTO

Application No:	13144187	Filing date:	07/12/2011
First Named Inventor:	Chung Kook LEE		
Title of the Invention:	SENSOR DEVICE PROTECTED BY A FILM LAYER AND A RESIN LAYER		

THIS REQUEST FOR PARTICIPATION IN THE PCT-PPH PILOT PROGRAM ALONG WITH THE REQUIRED DOCUMENTS MUST BE SUBMITTED VIA EFS-WEB. INFORMATION REGARDING EFS-WEB IS AVAILABLE AT HTTP://WWW.USPTO.GOV/EBC/EFS_HELP.HTML

APPLICANT HEREBY REQUESTS PARTICIPATION IN THE PCT-PPH PROGRAM AND PETITIONS TO MAKE THE ABOVE-IDENTIFIED APPLICATION SPECIAL UNDER THE PCT-PPH PROGRAM.

The above-identified application is (1) a national stage entry of the corresponding PCT application, or (2) a national stage entry of another PCT application which claims priority to the corresponding PCT application, or (3) a national application that claims domestic/ foreign priority to the corresponding PCT application, or (4) a national application which forms the basis for the priority claim in the corresponding PCT application, or (5) a continuing application of a U.S. application that satisfies one of (1) to (4) above, or (6) a U.S. application that claims domestic benefit to a U.S. provisional application which forms the basis for the priority claim in the corresponding PCT application.

The corresponding PCT application number(s) is/are: PCT/KR2009/002455

The international date of the corresponding PCT application(s) is/are: May 11, 2009

I. List of Required Documents:

a. **A copy of the latest international work product (WO/ISA, WO/IPEA, or IPER) in the above–identified corresponding PCT application(s)**

- [x] Is attached.
- [ ] Is not attached because the document is already in the U.S. application.

b. **A copy of all claims which were indicated as having novelty, inventive step and industrial applicability in the above-identified corresponding PCT application(s).**

- [ ] Is attached.
- [x] Is not attached because the document is already in the U.S. application.

c. **English translations of the documents in a. and b. above are attached (if the documents are not in the English language). A statement that the English translation is accurate is attached for the document in b. above.**

This collection of information is required by 35 U.S.C. 119, 37 CFR 1.55, and 37 CFR 1.102(d). The information is required to obtain or retain a benefit by the public, which is to file (and by the USPTO to process) an application. Confidentiality is governed by 35 U.S.C. 122 and 37 CFR 1.11 and 1.14. This collection is estimated to take 2 hours to complete, including gathering, preparing, and submitting the completed application form to the USPTO. Time will vary depending upon the individual case. Any comments on the amount of time you require to complete this form and/or suggestions for reducing this burden should be sent to the Chief Information Officer, U.S. Patent and Trademark Office, U.S. Department of Commerce, P.O. Box 1450, Alexandria, VA 22313-1450. DO NOT SEND FEES OR COMPLETED FORMS TO THIS ADDRESS.

Approved for use through 01/31/2012. OMB 0651-0058
U.S.Patent and Trademark Office; U.S. DEPARTMENT OF COMMERCE
Under the Paperwork Reduction Act of 1995, no persons are required to respond to a collection of information unless it displays a valid OMB control number.

REQUEST FOR PARTICIPATION IN THE PCT-PPH PILOT PROGRAM BETWEEN THE KIPO AND THE USPTO

(continued)

Application No.:	13144187
First Named Inventor:	Chung Kook LEE

d. **(1) An information disclosure statement listing the documents cited in the international work products (ISR, WO/ISA, WO/IPEA, IPER) of the corresponding PCT application.**

☐ Is attached

☒ Has already been filed in the above-identified U.S. application on 09/23/2011

(2) Copies of all documents (except) for U.S. patents or U.S. patent application publications)

☒ Are attached.

Have already been filed in the above-identified U.S. application on 09/23/2011

II. Claims Correspondence Table:

Claims in US Application	Patentable Claims in the corresponding PCT Application	Explanation regarding the correspondence
1-4	1-4	Claims 1-4 in the US Application correspond directly to claims 1-4 of the corresponding PCT Application.

III. All the claims in the US application sufficiently correspond to the patentable claims in the corresponding PCT application.

Signature /Brian C. Rupp/	Date 09/26/2011
Name (Print/Typed) Brian C. Rupp	Registration Number 35,665

Privacy Act Statement

The **Privacy Act of 1974 (P.L. 93-579)** requires that you be given certain information in connection with your submission of the attached form related to a patent application or patent. Accordingly, pursuant to the requirements of the Act, please be advised that: (1) the general authority for the collection of this information is 35 U.S.C. 2(b)(2); (2) furnishing of the information solicited is voluntary; and (3) the principal purpose for which the information is used by the U.S. Patent and Trademark Office is to process and/or examine your submission related to a patent application or patent. If you do not furnish the requested information, the U.S. Patent and Trademark Office may not be able to process and/or examine your submission, which may result in termination of proceedings or abandonment of the application or expiration of the patent.

The information provided by you in this form will be subject to the following routine uses:

1. The information on this form will be treated confidentially to the extent allowed under the Freedom of Information Act (5 U.S.C. 552) and the Privacy Act (5 U.S.C 552a). Records from this system of records may be disclosed to the Department of Justice to determine whether disclosure of these records is required by the Freedom of Information Act.
2. A record from this system of records may be disclosed, as a routine use, in the course of presenting evidence to a court, magistrate, or administrative tribunal, including disclosures to opposing counsel in the course of settlement negotiations.
3. A record in this system of records may be disclosed, as a routine use, to a Member of Congress submitting a request involving an individual, to whom the record pertains, when the individual has requested assistance from the Member with respect to the subject matter of the record.
4. A record in this system of records may be disclosed, as a routine use, to a contractor of the Agency having need for the information in order to perform a contract. Recipients of information shall be required to comply with the requirements of the Privacy Act of 1974, as amended, pursuant to 5 U.S.C. 552a(m).
5. A record related to an International Application filed under the Patent Cooperation Treaty in this system of records may be disclosed, as a routine use, to the International Bureau of the World Intellectual Property Organization, pursuant to the Patent Cooperation Treaty.
6. A record in this system of records may be disclosed, as a routine use, to another federal agency for purposes of National Security review (35 U.S.C. 181) and for review pursuant to the Atomic Energy Act (42 U.S.C. 218(c)).
7. A record from this system of records may be disclosed, as a routine use, to the Administrator, General Services, or his/her designee, during an inspection of records conducted by GSA as part of that agency's responsibility to recommend improvements in records management practices and programs, under authority of 44 U.S.C. 2904 and 2906. Such disclosure shall be made in accordance with the GSA regulations governing inspection of records for this purpose, and any other relevant (*i.e.*, GSA or Commerce) directive. Such disclosure shall not be used to make determinations about individuals.
8. A record from this system of records may be disclosed, as a routine use, to the public after either publication of the application pursuant to 35 U.S.C. 122(b) or issuance of a patent pursuant to 35 U.S.C. 151. Further, a record may be disclosed, subject to the limitations of 37 CFR 1.14, as a routine use, to the public if the record was filed in an application which became abandoned or in which the proceedings were terminated and which application is referenced by either a published application, an application open to public inspection or an issued patent.
9. A record from this system of records may be disclosed, as a routine use, to a Federal, State, or local law enforcement agency, if the USPTO becomes aware of a violation or potential violation of law or regulation.

UNITED STATES PATENT AND TRADEMARK OFFICE

Commissioner for Patents
United States Patent and Trademark Office
P.O. Box 1450
Alexandria, VA 22313-1450
www.uspto.gov

MAILED

SEP 1 9 2011

PCT LEGAL ADMINISTRATION

YOUNG & THOMPSON
209 Madison Street
Suite 500
Alexandria VA 22314

In re Application of: SOGO, Takushi
U.S. Application No.: 13/144,204
PCT No.: PCT/JP2009/064294
International Filing Date: 13 August 2009
Priority Date: 28 August 2008
Attorney's Docket No.: 0076246-000129
For: SERVER TRANSFER METHOD, TRANSFER MANAGEMENT SERVER, TERMINAL, SERVICE SERVER, SERVICE TRANSFER PROGRAM, AND SERVICE TRANSFER SYSTEM

DECISION ON PETITION UNDER 37 CFR 1.137(b)

The petition for revival under 37 CFR 1.137(b) filed 12 July 2011 in the above-captioned application is hereby **GRANTED** as follows:

International application PCT/JP2009/064294 became abandoned with respect to the United States at midnight on 28 February 2011 based on applicant's failure to submit payment of the basic national fee prior to the expiration of thirty months from the priority date.

The present petition for revival was accompanied by payment of the petition fee and the "required reply" in the form of the filing of the present national stage application and payment of the basic national fee. In addition, the petition includes a statement that "the entire delay in filing the required reply from the due date for the required reply until the filing of a grantable petition pursuant to 37 CFR 1.137(b) was unintentional," satisfying the requirement of 37 CFR 1.137(b)(3). Based on the above, the requirements of 37 CFR 1.137(b) have been satisfied. Accordingly, the request to revive the international application with respect to the United States is appropriately granted.

This application is being referred to the National Stage Processing Division of the Office of PCT Operations for further processing in accordance with this decision.

/RichardMRoss/

Richard M. Ross
Attorney Advisor
Office of PCT Legal Administration
Telephone: (571) 272-3296

UNITED STATES PATENT AND TRADEMARK OFFICE

UNITED STATES DEPARTMENT OF COMMERCE
United States Patent and Trademark Office
Address: COMMISSIONER FOR PATENTS
P.O. Box 1450
Alexandria, Virginia 22313-1450
www.uspto.gov

APPLICATION NO.	FILING DATE	FIRST NAMED INVENTOR	ATTORNEY DOCKET NO.	CONFIRMATION NO.
13/144,226	07/12/2011	Jean-Philippe Goyet	12721-045	3752

61114 7590 11/23/2011
BCF LLP
1100 RENE-LEVESQUE BLVD. WEST
25TH FLOOR
MONTREAL, QC H3B-5C9
CANADA

EXAMINER
KOENIG, ANDREW Y

ART UNIT	PAPER NUMBER
2423	

NOTIFICATION DATE	DELIVERY MODE
11/23/2011	ELECTRONIC

Please find below and/or attached an Office communication concerning this application or proceeding.

The time period for reply, if any, is set in the attached communication.

Notice of the Office communication was sent electronically on above-indicated "Notification Date" to the following e-mail address(es):

patents@bcf.ca
brevets@bcf.ca

UNITED STATES PATENT AND TRADEMARK OFFICE

Commissioner for Patents
United States Patent and Trademark Office
P.O. Box 1450
Alexandria, VA 22313-1450
www.uspto.gov

BCF LLP
1100 Rene-Levesque Blvd. West
25th Floor
Montreal QC H3B-5C0 CA Canada

In re Application of: Goyet et al.
Application No. 13/144226
Filed: July 12, 2011
For: Method and System for Subscriber Base Monitoring in IP Data Networks

DECISION ON REQUEST TO PARTICIPATE IN PATENT PROSECUTION HIGHWAY PROGRAM AND PETITION TO MAKE SPECIAL UNDER 37 CFR 1.102(a)

This is a decision on the request to participate in the PCT- Patent Prosecution Highway (PPH) pilot program and the petition under 37 CFR 1.102(a), filed November 17, 2011, to make the above-identified application special.

The petition is **GRANTED.**

A grantable request to participate in the PPH program and petition to make special require:

(1) The U.S. application is
(a) a national stage entry of the corresponding PCT application

Or

(b) a national application which forms the basis for the priority claim in the corresponding PCT application

Or

(c) *a* national stage entry of another PCT application (which can be filed in any competent receiving office) which claims priority to the corresponding PCT application

Or

(d) a national application claiming foreign domestic priority to the corresponding PCT application.
Applications subject to a secrecy order (35U.S.C.181) are excluded and not subject to participation in the PCT-PPH pilot program.

Or

(e) a continuing application (continuation, divisional, or continuation-in-part) of the U.S. application which satisfies one of the above (a) to (d) scenarios.

(2) The latest work product in the international phase of the PCT application corresponding to the U.S. application, namely the WO/ISA, or the WO/IPEA, or the IPER, indicates at least one claim in the PCT application has novelty, inventive step and industrial applicability. In case any observation is described in Box VIII of the WO/ISA, or the WO/IPEA, or the IPER which forms the basis for the PCT-PPH request, applicant must identify and explain why the claim(s) is/are not subject to any observation described in Box VIII irrespective of whether an amendment is submitted to correct the observation described in Box VIII. The U.S. application will not be eligible to participate in the PCT-PPH pilot program if applicant does not identify and explain why the claim(s) is/are not subject to the observation described in Box VIII.

Applicant may not file a request to participate in the PCT-PPH pilot program on the basis of an International Search Report (ISR) only.

(3) Applicant must:

a. Ensure all the claims in the U.S. application sufficiently correspond or be amended to sufficiently correspond to one or more of those claims indicated as having novelty, inventive step and industrial applicability and free of any observation described in Box VIII in the latest work product of the corresponding PCT application and

b. Submit a claims correspondence table in English;

The USPTO will accept claims written in dependent form in the U.S. application which are narrower in scope than the claims indicated as having novelty, inventive step and industrial applicability and free of any observation described in Box VIII in the latest work product of the corresponding PCT application.

(4) Substantive Examination of the U.S. application has not begun;

(5) Applicant must submit a copy of:

a. the latest international work product, WO/ISA, or WO/IPEA or PER, which indicated that the claim(s) has/have novelty, inventive step and industrial applicability along with an English translation thereof if the copy of the latest international work product is not in the English language, unless the U.S. application and the corresponding PCT application satisfy the relationship noted in (1)(a) above.

(6) Applicant must submit a copy of:

a. the claims from the corresponding PCT application which were indicated as having novelty, inventive step and industrial applicability in the latest work product of the PCT application,
b. an English translation of the claims and
c. a statement that the English translation is accurate.

If the claims in the U.S. application are identical to the claims from the corresponding PCT application, and are in the English language, applicant may just indicate such in the PCT-PPH

The request to participate in the PCT-PPH program and petition are found to comply with all the above requirements. Accordingly, the above-identified application has been accorded "special" status.

Telephone inquiries concerning this decision should be directed to Tod Swann at 571-272-36128

All other inquiries concerning the examination or status of the application is accessible in the PAIR system at http://www.uspto.gov/ebc/index.html.

The application is being forwarded to the examiner for action on the merits commensurate with this decision.

/Tod Swann/
Tod Swann
Quality Assurance Specialist
Technology Center 2400

UNITED STATES PATENT AND TRADEMARK OFFICE

Commissioner for Patents
United States Patent and Trademark Office
P.O. Box 1450

MAILED
MAR 12 2012
OFFICE OF PETITIONS

SUGHRUE MION, PLLC
2100 PENNSYLVANIA AVENUE, N.W.
SUITE 800
WASHINGTON DC 20037

In re Application of	: DECISION ON REQUEST TO
Louis WIBBERLEY	: PARTICIPATE IN PPH PROGRAM
Application No. 13/144,233	: AND PETITION TO MAKE SPECIAL
Filing Date: July 12, 2011	: UNDER 37 CFR 1.102(a)
Atty. Docket No.: Q125592	:
For: TREATMENT OF LOW RANK COALS	

This is a decision on the request to participate in the Patent Prosecution Highway (PPH) program and the petition under 37 CFR 1.102(a), filed January 25, 2012 to make the above-identified application special.

The petition and request are **GRANTED**.

A grantable request to participate in the PPH (patent prosecution highway) program and petition to make special require:

(1) the U.S. application is a Paris Convention application which either validly claims priority under 35 U.S.C. 119(a) and 37 CFR 1.55 to one or more applications filed in the IPAU (IP Australia) or claims priority to a PCT application that contains no priority claims. Alternatively, it can be a national stage application under the PCT filed in the IPAU that contains no priority claims;

(2) applicant must submit a copy of the allowable/patentable claim(s) from the IPAU application(s) along with an English translation thereof and a statement that the English translation is accurate;

(3) all the claims in the U.S. application must sufficiently correspond or be amended to sufficiently correspond to the allowable/patentable claim(s) in the IPAU application(s);

(4) examination of the U.S. application has not begun;

(5) applicant must submit a copy of all the office actions from each of the IPAU application(s) containing the allowability/patentable claim(s) along with an English translation thereof and a statement that the English translation is accurate; and

(6) applicant must submit an IDS listing the documents cited by the IPAU examiner in the IPAU office action along with copies of documents except U.S. patents or U.S. patent application publications.

The request to participate in the PPH program and petition comply with the above requirements. Accordingly, the above-identified application has been accorded "special" status.

Telephone inquiries concerning this decision should be directed to Robert DeWitty, Petition Attorney, Office of Petitions at 571-272-8427.

All other inquiries concerning the examination or status of the application is accessible in the PAIR system at http://www.uspto.gov/ebc/index.html.

David Bucci
Petitions Examiner
Office of Petitions

UNITED STATES PATENT AND TRADEMARK OFFICE

MAILED

SEP 01 2011

PCT LEGAL ADMINISTRATION

Commissioner for Patents
United States Patent and Trademark Office
P.O. Box 1450
Alexandria, VA 22313-1450
www.uspto.gov

MICHAEL A. ERVIN
8202 TALBOT COVE
AUSTIN TX 78746

In re Application of: POLK, Dale, E.	:	
U.S. Application No.: 13/144,254	:	DECISION ON PETITION UNDER
PCT Application No.: PCT/US2010/00068	:	37 CFR 1.182
International Filing Date: 13 January 2010	:	
Priority Date: 13 January 2009	:	
Attorney's Docket No.: MAE-LRM-16-US	:	
For: HEAT EXCHANGE PANEL	:	

This decision is issued in response to the "Petition Under 37 CFR 1.182" filed on 20 August 2011. Applicants have paid the required petition fee.

BACKGROUND

On 18 August 2011, this Office mailed a notification indicating that a petition under 37 CFR 1.182 was required to clarify the record as to the correct international application number for the present national stage application. The notification indicated that the original application submission on 12 July 2011 referenced two different international applications, specifically, PCT/US2010/00068 and PCT/US2009/00068.

On 20 August 2011, applicants filed the petition under 37 CFR 1.182 considered herein.

DISCUSSION

The petition filed on 20 August 2011 confirms that the correct international application number for the present national stage application is PCT/US2010/00068 and that the reference to PCT/US2009/00068 in the original application submission was the result of a typographical error. The petition notes that the correct international application was present in the initial application materials filed on 12 July 2011, specifically, in the Form PTO-1390 Transmittal Letter. In addition, the petition was accompanied by the required petition fee.

Applicants' 20 August 2011 submission satisfies the requirements for a grantable petition under 37 CFR 1.182 to correct the inconsistency in the international application numbers identified in applicants' 12 July 2011 filing. Accordingly, the application materials filed on 12 July 2011 will be treated as directed to international application of PCT/US2010/00068. Such materials, including payment of the U.S. basic national fee, were filed prior to the expiration of thirty months from the priority date of PCT/US2010/00068, thereby avoiding abandonment of the international application with respect to the United States.

CONCLUSION

The petition under 37 CFR 1.182 is **GRANTED**.

The present application will be treated as the U.S. national stage under 35 U.S.C. 371 of PCT/US2010/00068.

The application is being referred to the National Stage Processing Branch of the Office of PCT Operations for further processing in accordance with this decision.

/RichardMRoss/

Richard M. Ross
Attorney Advisor
Office of PCT Legal Administration
Telephone: (571) 272-3296

United States Patent and Trademark Office

Commissioner for Patents
United States Patent and Trademark Office
P.O. Box 1450
Alexandria, VA 22313-1450
www.uspto.gov

WILSON, SONSINI, GOODRICH & ROSATI
650 PAGE MILL ROAD
PALO ALTO CA 94304-1050

MAILED

JUL 28 2011

PCT LEGAL ADMINISTRATION

In re Application of
Fallon et al.
Application No.: 13/144,286
PCT No.: PCT/US2010/020253
Int. Filing Date: 06 January 2010
Priority Date: 06 January 2009
Attorney Docket No.: 41012-718831
For: Compositions And Methods For Treatment Or Prevention Of Staphylococcus Aureus Infections And For The Eradication Or Reduction Of Staph...

DECISION ON PETITION

This is in response to the petitions under 37 CFR 1.182 and 1.137(b) filed on 12 July 2011.

Petition Under 37 CFR 1.182

Petitioner has requested expedited treatment of the concurrently filed petition under 37 CFR 1.137(b). The petition is **GRANTED**. The $400.00 petition fee will be charged to counsel's Deposit Account no. 23-2415, as authorized.

Petition Under 37 CFR 1.137(b)

The petition to revive under 37 CFR 1.137(b) is hereby **GRANTED** as follows:

Petitioner states that "the entire delay in filing the required reply from the due date for the reply until the filing of a grantable petition under 37 C.F.R. 1.137(b) was unintentional." Said statement is being accepted in satisfaction of 37 CFR 1.137(b)(3).

A review of the application file reveals that applicants have filed the required reply. The $810.00 small entity petition fee is being charged to counsel's Deposit Account, as authorized. No terminal disclaimer is required. Therefore, the request to revive the application abandoned under 35 U.S.C. 371(d) is granted as to the national stage in the United States of America.

This application is being returned to the Office of Patent Application Processing for further processing. Its date under 35 U.S.C. 371(c)(1), (2) and (4) is **12 July 2011**.

/George Dombroske/
George Dombroske
PCT Legal Examiner
Office of PCT Legal Administration
Tel: (571) 272-3283

UNITED STATES PATENT AND TRADEMARK OFFICE

Commissioner for Patents
United States Patent and Trademark Office
P.O. Box 1450
Alexandria, VA 22313-1450
www.uspto.gov

WILSON, SONSINI, GOODRICH & ROSATI
650 PAGE MILL ROAD
PALO ALTO CA 94304-1050

MAILED

JUL 28 2011

PCT LEGAL ADMINISTRATION

In re Application of
FALLON, Joan M., et al.
Application No.: 13/144,290
PCT No.: PCT/US2010/020259
Int. Filing Date: 06 January 2010
Priority Date: 06 January 2009
Att. Docket No.: 41012-719831
For: COMPOSITIONS AND METHODS ... OF E. COLI SURFACES

DECISION ON

PETITIONS

UNDER 37 CFR 1.182 and 1.137(b)

Applicant's petitions to expedite processing of their petition under 37 CFR 1.137(b) and their petition under 37 CFR 1.137(b), both filed in the United States Patent and Trademark Office on 12 July 2011, are **GRANTED**. The fee for the petition under 37 CFR 1.182 will be charged to deposit account no. 23-2415.

Applicant states that the entire delay in filing the required reply from the due date for the required reply until the filing of a grantable petition under 37 CFR 1.137(b) was unintentional, as required by 37 CFR 1.137(b)(3). The appropriate national fee has been paid. The small entity petition fee will be charged to deposit account no. 23-2415, as authorized. A terminal disclaimer is not required as the application was filed on or after 08 June 1995. Accordingly, all requirements under 37 CFR 1.137(b) have been satisfied.

This application is being referred to the National Phase Processing Branch of the Office of Patent Application Processing for further action consistent with this decision.

/Erin P. Thomson/

Erin P. Thomson
Attorney Advisor
PCT Legal Administration

Telephone: 571-272-3292

UNITED STATES PATENT AND TRADEMARK OFFICE

COMMISSIONER FOR PATENTS
UNITED STATES PATENT AND TRADEMARK OFFICE
P.O. BOX 1450
ALEXANDRIA, VA 22313-1450
www.uspto.gov

MAILED

AUG 24 2011

PCT LEGAL ADMINISTRATION

GENERAL ELECTRIC COMPANY
GE GLOBAL PATENT OPERATION
2 CORPORATE DRIVE, SUITE 648
SHELTON, CT 06484

In re Application of KRÄMER et al	:	
U.S. Application No.: 13/144,306	:	
PCT Application No.: PCT/EP2009/000152	:	
Int. Filing Date: 13 January 2009	:	
Priority Date Claimed: 24 September 2008	:	DECISION
Attorney Docket No.: 232526_5	:	
For: DEVICE FOR TESTING THE MATERIAL OF TEST OBJECTS BY MEANS OF X-RAY RADIATION	:	

This is in response to applicant's "Petition for Revival of an International Application for Patent Designating the U.S. Abandoned Unintentionally Under 37 CFR 1.137(b)" filed 13 July 2011.

BACKGROUND

On 13 January 2009, applicant filed international application PCT/EP2009/000152, which claimed priority of an earlier European Patent Office application filed 24 September 2008. A copy of the international application was communicated to the USPTO from the International Bureau on 01 April 2010. The thirty-month period for paying the basic national fee in the United States expired on 24 March 2011.

On 25 March 2011, international application PCT/EP2009/000152 became abandoned as to the United States for failure to timely pay the basic national fee.

On 13 July 2011, applicant filed the present petition under 37 CFR 1.137(b).

DISCUSSION

Under 37 CFR 1.137(b), a petition requesting that an application be revived on the grounds of unintentional abandonment must be accompanied by: (1) the required reply unless previously filed, (2) the petition fee as set forth in 37 CFR 1.17(m), (3) a statement that the entire

delay in filing the required reply from the due date for the reply until the filing of a grantable petition was unintentional, and (4) a terminal disclaimer if the application was filed before 08 June 1995.

With regard to item (1), applicant has provided the required reply under 35 U.S.C. 371.

With regard to item (2), applicant the required petition fee will be charged to Deposit Account No. 09-0470 as authorized by applicant.

With regard to item (3), applicant has provided the required statement.

With regard to item (4), because the international application was filed after 08 June 1995, no terminal disclaimer is required.

CONCLUSION

For the reasons above, the petition under 37 CFR 1.137(b) is GRANTED.

This application is being forwarded to the United States Designated/Elected Office (DO/EO/US) for further processing in accordance with this decision, including preparation and mailing of a Notification of Missing Requirements under 35 U.S.C. 371 (Form PCT/DO/EO/905) indicating that an executed oath or declaration in compliance with 37 CFR 1.497 must be filed.

Bryan Lin
PCT Legal Examiner
PCT Legal Office

Telephone: 571-272-3303
Facsimile: 571-273-0459

11 UNITED STATES PATENT AND TRADEMARK OFFICE

Commissioner for Patents
United States Patent and Trademark Office
P.O. Box 1450
Alexandria, VA 22313-1450
www.uspto.gov

MAILED

OCT 04 2011

PCT LEGAL ADMINISTRATION

DAVIS WRIGHT TREMAINE LLP/Los Angeles
865 FIGUEROA STREET
SUITE 2400
LOS ANGELES CA 90017-2566

In re Application of
Rotter et al.
Application No.: 13/144,376
PCT No.: PCT/US2010/020921
Int. Filing Date: 13 January 2010
Priority Date: 13 January 2009
Attorney Docket No.: 67789-233US0
For: Methods Of Using SMAD3 And JAK2 Variants To Diagnose And Predict Inflammatory Bowel Dis..

DECISION

This is in response to the petition filed on 22 July 2011, which is being treated as a submission under 37 CFR 1.497(d).

BACKGROUND

This international application was filed on 13 January 2010, claimed an earlier priority date of 13 January 2009, and designated the U.S. The International Bureau transmitted a copy of the published international application to the USPTO on 22 July 2010. The 30 month time period for paying the basic national fee in the United States expired at midnight on 13 July 2011. Applicants filed *inter alia* the basic national fee on 13 July 2011.

DISCUSSION

Counsel requests the addition of Stephan R. Targan as an inventor. Counsel seeks relief under 37 CFR 1.48(a), but the regulation most pertinent to this situation is 37 CFR 1.497(d). A declaration filed under 37 CFR 1.497 (d) must be by the actual inventor or inventors as required under 37 CFR 1.63 or as permitted by 37 CFR 1.42, 1.43 or 1.47. The declaration must be accompanied by (1) a statement from each person being added as an inventor and from each person being deleted as an inventor that the error in inventorship occurred without deceptive intention on his or her part, (2) the processing fee set forth in 37 CFR 1.17; and (3) if an assignment has been executed by any of the original named inventors, the written consent of the assignee (*See* 37 CFR 3.73(b)).

Regarding requirement (1), applicants have provided an appropriate statement signed by Stephan R. Targan.

Regarding requirement (2), the $130.00 processing fee has been paid.

Regarding requirement (3), counsel has presented a written "Assent of Assignee..." stating that Cedars-Sinai consents to the correction of inventorship "filed herewith." The assignee has been identified, and the reel and frame where documentary evidence of a chain of title has been recorded has been provided. The "Assent..." document itself has been signed by Peter E. Braveman in the capacity of "Sr. Vice President for Legal Affairs and General Counsel." An accompanying statement under 37 CFR 3.73(b) has been signed by Seth D. Levy, who asserts

authority to act on behalf of the assignee. In view of these facts, it would be appropriate to conclude that requirement (3) has been satisfied.

DECISION

The declaration is **ACCEPTED** under 37 CFR 1.497(d).

This application is being returned to the Office of Patent Application Processing. Its date under 35 U.S.C. 371(c)(1), (2) and (4) is **22 July 2011**.

/George Dombroske/
George Dombroske
PCT Legal Examiner
Office of PCT Legal Administration
Tel: (571) 272-3283

UNITED STATES PATENT AND TRADEMARK OFFICE

Commissioner for Patents
United States Patent and Trademark Office
P.O. Box 1450
Alexandria, VA 22313-1450
www.uspto.gov

MAILED

SEP 07 2011

PCT LEGAL ADMINISTRATION

Bracewell & Giuliani LLP
P.O. Box 61389
Houston TX 77208-1389

In re Application of	:	
Mark K. ROOKS	:	
Application No.: 13/144,382	:	DECISION ON PETITION
PCT No.: PCT/US2009/063823	:	UNDER 37 CFR 1.137(b)
Int. Filing Date: 10 November 2009	:	
Priority Date: None	:	
Attorney Docket No.: 004159.003093B	:	
For: NTAKE FOR SHROUDED ELECTRIC SUBMERSIBLE PUMP ASSEMBLY		

The petition to revive under 37 CFR 1.137(b) filed 13 July 2011 in the above-captioned application is hereby GRANTED as follows:

Applicants' statement that "the entire delay in filing the required reply from the due date for the reply until the filing of a grantable petition under 37 CFR 1.137(b) was unintentional" meets the requirements of 37 CFR 1.137(b)(3).

A review of the application file reveals that applicants have submitted the basic national fee and the requirements of 37 CFR 1.137(b) have been satisfied. Therefore, the request to revive the application abandoned under 35 U.S.C. 371(d) is granted as to the National stage in the United States of America.

This application is being forwarded to the United States Designated/Elected Office (US/DO/EO) for continued processing in accordance with this decision.

Anthony Smith
Attorney-Advisor
Office of PCT Legal Administration
Telephone: (571) 272-3298
Facsimile: (571) 273-0459

UNITED STATES PATENT AND TRADEMARK OFFICE

Commissioner for Patents
United States Patent and Trademark Office
Washington, D.C. 20231
www.uspto.gov

MAILED

AUG 16 2011

PCT LEGAL ADMINISTRATION

RICHARD E. FICHTER
625 SLATERS LANE, FOURTH FLOOR
ALEXANDRIA, VA 22314

In re Application of :
LAI, Siew Kong ET AL :
U.S. Application No.: 13/144406 : DECISION ON PETITION
PCT No.: PCT/SG09/000468 :
Int. Filing Date: 04 DECEMBER 2009 :
Priority Date: 04 DECEMBER 2008 :
For: A LANCING DEVICE :

The petition to revive under 37 CFR 1.137(b) filed 13 July 2011, in the above-captioned application is hereby **GRANTED**.

Applicant states that "the entire delay in filing the required reply from the due date was unintentional", as required by 37 CFR 1.137(b)(3). The appropriate petition fee has been submitted. A terminer disclaimer is not required as the application was filed on or after 08 June 1995. Accordingly, all requirements under 37 CFR 1.137(b) have been satisfied.

A review of the application file reveals that applicant has now provided payment of the full, U.S. Basic National Fee. Therefore, the request to revive the application abandoned under 35 U.S.C. 371(d) is granted as to the National stage in the United States of America.

This application is being forwarded to the United States Designated/Elected Office (US/DO/EO) for continued processing.

Wanda Banks
Paralegal Specialist
Office of PCT Legal Administration
Tel: (571) 272-3277

Richard Cole
PCT Legal Examiner
Office of PCT Legal Administration

UNITED STATES PATENT AND TRADEMARK OFFICE

COMMISSIONER FOR PATENTS
UNITED STATES PATENT AND TRADEMARK OFFICE
P.O. BOX 1450
ALEXANDRIA, VA 22313-1450
www.uspto.gov

MAILED

AUG 23 2011

PCT LEGAL ADMINISTRATION

FITCH EVEN TABIN & FLANNERY
120 SOUTH LASALLE STREET
SUITE 1600
CHICAGO, IL 60603-3406

In re Application of KARINO et al	:	
U.S. Application No.: 13/144,468	:	
PCT Application No.: PCT/JP2010/050026	:	DECISION
Int. Filing Date: 05 January 2010	:	
Priority Date Claimed: 23 January 2009	:	
Attorney Docket No.: 9190-100429-US	:	
For: SPINNING METHOD	:	

This is in response to applicant's petition under 37 CFR 1.182 filed 14 July 2011.

BACKGROUND

On 05 January 2010, applicant filed international application PCT/JP2010/050026, which claimed priority of an earlier Japan application filed 23 January 2009. A copy of the international application was communicated to the USPTO from the International Bureau on 29 July 2010. The thirty-month period for paying the basic national fee in the United States expired on 25 July 2011.

On 13 July 2011, applicant filed national stage papers in the United States Designated/Elected Office (DO/EO/US) via the EFS-Web electronic filing system of the USPTO. The electronic submission identified the international application number as "PCT/US10/50026".

On 14 July 2011, applicant filed the present petition under 37 CFR 1.182.

DISCUSSION

The petition states that the incorrect international application number was inadvertently entered into the EFS-Web user interface. A review of the papers filed on 05 January 2010 reveals that the correct international application number PCT/JP2010/050026 was present on at least one document. Accordingly, correction of the application is permissible. Applicant's explanation for the error is accepted.

CONCLUSION

For the reasons above, the petition under 37 CFR 1.182 is GRANTED.

This application is being forwarded to the United States Designated/Elected Office (DO/EO/US) for further processing in accordance with this decision, including preparation and mailing of a Notification of Missing Requirements under 35 U.S.C. 371 (Form PCT/DO/EO/905) indicating that the declaration filed 13 July 2011 cannot presently be accepted.[1]

Bryan Lin
PCT Legal Examiner
PCT Legal Office

Telephone: 571-272-3303
Facsimile: 571-273-0459

[1] The declaration is not presently in compliance with 37 CFR 1.69(b) in that it is neither in a official form (i.e. Form PTO/SB/106) nor accompanied by a statement that the translation contained therein is accurate.

PTO/SB/20PCT-EP (05-10)
Approved for use through 01/31/2012. OMB 0651-0058
U.S. Patent and Trademark Office; U. S. DEPARTMENT OF COMMERCE
Under the Paperwork Reduction Act of 1995, no persons are required to respond to a collection of information unless it displays a valid OMB control number.

REQUEST FOR PARTICIPATION IN THE PATENT COOPERATION TREATY - PATENT PROSECUTION HIGHWAY (PCT-PPH) PILOT PROGRAM BETWEEN THE EUROPEAN PATENT OFFICE (EPO) AND THE USPTO

Application No:	To be assigned	Filing date:	Concurrently herewith
First Named Inventor:	Paolo VACCA et al.		
Title of the Invention:	COMPOSITION FOR THE PROTECTION OF MOISTURE SENSITIVE DEVICES		

THIS REQUEST FOR PARTICIPATION IN THE PCT-PPH PILOT PROGRAM ALONG WITH THE REQUIRED DOCUMENTS MUST BE SUBMITTED VIA EFS-WEB. INFORMATION REGARDING EFS-WEB IS AVAILABLE AT HTTP://WWW.USPTO.GOV/EBC/EFS_HELP.HTML

APPLICANT HEREBY REQUESTS PARTICIPATION IN THE PCT-PPH PROGRAM AND PETITIONS TO MAKE THE ABOVE-IDENTIFIED APPLICATION SPECIAL UNDER THE PCT-PPH PROGRAM.

The above-identified application is (1) a national stage entry of the corresponding PCT application, or (2) a national stage entry of another PCT application which claims priority to the corresponding PCT application, or (3) a national application that claims domestic/ foreign priority to the corresponding PCT application, or (4) a national application which forms the basis for the priority claim in the corresponding PCT application, or (5) a continuing application of a U.S. application that satisfies one of (1) to (4) above, or (6) a U.S. application that claims domestic benefit to a U.S. provisional application which forms the basis for the priority claim in the corresponding PCT application.

The corresponding PCT application number(s) is/are: PCT/EP2011/053759

The international filing date of the corresponding PCT application(s) is/are: March 14, 2011

I. List of Required Documents:

a. **A copy of the latest international work product (WO/ISA, WO/IPEA, or IPER) in the above–identified corresponding PCT application(s)**

- [x] Is attached
- [ ] Is not attached because the document is already in the U.S. application.

b. **A copy of all claims which were indicated as having novelty, inventive step and industrial applicability in the above-identified corresponding PCT application(s).**

- [x] Is attached.
- [ ] Is not attached because the document is already in the U.S. application.

c. **English translations of the documents in a. and b. above are attached (if the documents are not in the English language). A statement that the English translation is accurate is attached for the document in b. above.**

This collection of information is required by 35 U.S.C. 119, 37 CFR 1.55, and 37 CFR 1.102(d). The information is required to obtain or retain a benefit by the public, which is to file (and by the USPTO to process) an application. Confidentiality is governed by 35 U.S.C. 122 and 37 CFR 1.11 and 1.14. This collection is estimated to take 2 hours to complete, including gathering, preparing, and submitting the completed application form to the USPTO. Time will vary depending upon the individual case. Any comments on the amount of time you require to complete this form and/or suggestions for reducing this burden should be sent to the Chief Information Officer, U.S. Patent and Trademark Office, U.S. Department of Commerce, P.O. Box 1450, Alexandria, VA 22313-1450. DO NOT SEND FEES OR COMPLETED FORMS TO THIS ADDRESS.

Approved for use through 01/31/2012. OMB 0651-0058
U.S.Patent and Trademark Office; U.S. DEPARTMENT OF COMMERCE
Under the Paperwork Reduction Act of 1995, no persons are required to respond to a collection of information unless it displays a valid OMB control number.

REQUEST FOR PARTICIPATION IN THE PCT-PPH PILOT PROGRAM BETWEEN THE EPO AND THE USPTO

(continued)

Application No.:	To be assigned
First Named Inventor:	Paolo VACCA

d. **(1) An information disclosure statement listing the documents cited in the international work products (ISR, WO/ISA, WO/IPEA, IPER) of the corresponding PCT application.**

☒ Is attached

☐ Has already been filed in the above-identified U.S. application on _____

(2) Copies of all documents (except) for U.S. patents or U.S. patent application publications)

☒ Are attached.

☐ Have already been filed in the above-identified U.S. application on _____

II. Claims Correspondence Table:

Claims in US Application	Patentable Claims in the corresponding PCT Application	Explanation regarding the correspondence
1	1	Minor linguistic differences from PCT-1
2	2	Minor linguistic differences from PCT-2
3	3	Minor linguistic differences from PCT-3
4	4	Minor linguistic differences from PCT-4
5	5	Minor linguistic differences from PCT-5
6	6	Minor linguistic differences from PCT-6
7	7	Minor linguistic differences from PCT-7
8	8	Minor linguistic differences from PCT-8
9	9	Minor linguistic differences from PCT-9
10	10	Minor linguistic differences from PCT-10
11	11	Minor linguistic differences from PCT-11
12	12	Minor linguistic differences from PCT-12
13	13	Minor linguistic differences from PCT-13
14	14	Minor linguistic differences from PCT-14
15	15	Minor linguistic differences from PCT-15
16	16	Minor linguistic differences from PCT-16

III. All the claims in the US application sufficiently correspond to the patentable claims in the corresponding PCT application.

Signature / Alessandro Steinfl, Reg. No. 56,448 /	Date July 13, 2011
Name (Print/Typed) Alessandro Steinfl	Registration Number 56448

UNITED STATES PATENT AND TRADEMARK OFFICE

Commissioner for Patents
United States Patent and Trademark Office
P.O. Box 1450
Alexandria, VA 22313-1450
www.uspto.gov

MAILED
JAN 27 2012
OFFICE OF PETITIONS

STEINFL & BRUNO LLP
155 N. LAKE AVE. STE 700
PASADENA CA 91101

In re Application of
VACCA, et al
Application No.: 13/144,491
Filed: July 13, 2011
Attorney Docket No.: P788-US
For: COMPOSITION FOR THE PROTECTION OF MOISTURE SENSITIVE DEVICES

: DECISION ON REQUEST TO
: PARTICIPATE IN THE PATENT
: PROSECUTION HIGHWAY
: PROGRAM AND PETITION
: TO MAKE SPECIAL UNDER
: 37 CFR 1.102(a)

This is a decision on the request to participate in the PCT Patent Prosecution Highway (PPH) program and the petition under 37 CFR 1.102(a), filed July 13, 2011, to make the above-identified application special.

The request and petition are **GRANTED**.

Discussion

A grantable request to participate in the PCT-PPH pilot program and petition to make special require:

(1) The U.S. application must have an eligible relationship to one or more PCT applications where the ISA or IPEA are the JPO, EPO, Australia, Austria, KIPO, NPI, Russia, Spain, Sweden, Finland, China, or USPTO;

(2) At least one claim in the PCT application has novelty, inventive step, and industrial applicability and must be free of any observations in Box VIII in the latest work product in the international stage or applicant must identify and explain why the claim(s) is/are not subject to the observation in Box VIII;

(3) Applicant must submit a copy of the claim(s) from the PCT application(s) that have novelty, inventive step, and industrial applicability along with an English translation thereof and a statement that the English translation is accurate, if the claims are not in the English language;

(4) All the claims in the U.S. application must sufficiently correspond or be amended to sufficiently correspond to the claim(s) that have novelty, inventive step, and industrial applicability in the PCT application(s);

(5) Examination of the U.S. application has not begun;

(6) Applicant must submit a copy of the latest international work product from the PCT application indicating that the claim(s) have novelty, inventive step, and industrial applicability along with an English translation thereof and a statement that the English translation is accurate if the latest international work product is not in the English language;

(7) Applicant must submit an IDS listing the documents cited by the PCT examiner in the international work product along with copies of documents except U.S. patents or U.S. patent application publications.

The request to participate in the PCT PPH pilot program and petition comply with the above requirements. Accordingly, the above-identified application has been accorded "special" status.

Inquiries concerning this decision should be directed to Diane Goodwyn at (571) 272-6735.

All other inquiries concerning the examination or status of the application is accessible in the PAIR system at http://www.uspto.gov/ebc.index.html.

This application is being forwarded to Technology Center Art Unit 1761 for action on the merits commensurate with this decision.

David Buck
Petitions Examiner
Office of Petitions

UNITED STATES PATENT and TRADEMARK OFFICE

COMMISSIONER FOR PATENTS
UNITED STATES PATENT AND TRADEMARK OFFICE
P.O BOX 1450
ALEXANDRIA, VA 22313-1450
www.uspto.gov

Ladas & Parry LLP
224 South Michigan Avenue Suite 1600
Chicago, Illinois 60604

MAILED
AUG 31 2011
PCT LEGAL ADMINISTRATION

In re Application of	:	DECISION ON
HYAM et al	:	
Application No.: 13/144,601	:	
PCT No.: PCT/IN2010/000022	:	
Filing Date: 12 January 2010	:	PETITION UNDER
Priority Date: 12 January 2009	:	
Attorney's Docket No.: CU-9263 EDB	:	
For: One Step Electrochemical . . . Nanoneedles	:	37 CFR 1.137(b)

This decision is in response to applicants' "Petition For Revival Of An International Application For Patent Designating the U.S. Abandoned Unintentionally Under 37 CFR 1.137(b)," filed 14 July 2011.

BACKGROUND

On 12 January 2010, this international application was filed, claiming an earliest priority date of 12 January 2009.

The deadline for paying the basic national fee in the United States under 35 U.S.C. 371 and 37 CFR 1.495 was 12 July 2011. This international application became abandoned with respect to the United States at midnight on 12 July 2011 for failure to pay the required basic national fee.

On 14 July 2011, applicant filed in the United States Patent and Trademark Office (PTO) a transmittal letter for entry into the national stage in the U.S. under 35 U.S.C. 371, which was accompanied by, *inter alia*, the national basic fee, petition fee, and a petition under 37 CFR 1.137(b).

On 28 July 2011, applicant also filed an executed Declaration.

DISCUSSION

A grantable petition to revive an abandoned application under 37 CFR 1.137(b) must be accompanied by (1) the required reply, unless previously filed. In a nonprovisional application abandoned for failure to prosecute, the required reply may be met by the filing of a continuing application; (2) the petition fee as set forth in § 1.17(m); and (3) a statement that the entire delay in filing the required reply from the due date for the reply until the filing of a grantable petition pursuant to this paragraph was unintentional. The Commissioner may require additional information where there is a question whether the delay was unintentional; and (4) any terminal disclaimer (and fee as set forth in § 1.20 (d)) required pursuant to paragraph (c) of this section.

Petitioner has provided: (1) the proper reply by submitting the basic national filing fee, (2) the petition fee set forth in §1.17(m) and (3) the proper statement under 137(b)(3). In this application, no terminal disclaimer is required.

Accordingly, the petition is deemed to satisfy requirements (1), (2), (3), and (4) under 37 CFR 1.137(b).

DECISION

The petition under 37 CFR 1.137(b) is **GRANTED**.

This application is being returned to the United States Designated/Elected Office (DO/EO/US) for continued processing.

Rafael Bacares
PCT Legal Examiner
PCT Legal Office
Telephone: (571) 272-3276
Facsimile: (571) 273-0459

Jacquelyn Prather

UNITED STATES PATENT AND TRADEMARK OFFICE

Commissioner for Patents
United States Patent and Trademark Office
P.O. Box 1450
Alexandria, VA 22313-1450
www.uspto.gov

Baker & Daniels LLP- Dow AgroSciences
300 North Meridian Street, Suite 2700
Indianapolis IN 46204

MAILED
JAN 17 2012
PCT LEGAL ADMINISTRATION

In re Application of	:	
YOUNG et al.	:	
Application No.: 13/144,679	:	DECISION ON
PCT No.: PCT/US2010/021055	:	PAPERS UNDER 37 CFR 1.42
Int. Filing Date: 14 January 2010	:	
Priority Date: 14 January 2009	:	
Attorney Docket No.: DAS-P0215-53-US	:	
For: FUNGICIDAL COMPOSITIONS INCLUDING HYDRAZONE DERIVATIVES AND COPPER	:	

This application is before the Office of PCT Legal Administration for issues arising under 35 U.S.C. 371. Additionally, this decision is issued in response to the declaration submitted under 37 CFR 1.42. No petition fee is required.

BACKGROUND

On 14 January 2010, applicants filed the above-identified international application which claimed a priority date of 14 January 2009. Pursuant to 37 CFR 1.495, the deadline for payment of the basic national fee was to expire 30 months from the priority date, 14 July 2011.

On 14 July 2011, applicants filed a transmittal letter for entry into the national stage in the United States accompanied, inter alia, by the basic national fee and a copy of the international application.

On 29 July 2011, the United States Designated/Elected Office (DO/EO/US) mailed a Notification of Missing Requirements (Form PCT/DO/EO/905) requiring an oath or declaration in compliance with 37 CFR 1.497 and the surcharge fee required under 37 CFR 1.492(h). The notification set a two-month time limit in which to respond.

On 23 September 2011, applicants submitted an executed declaration.

On 03 October 2011, the United States Designated/Elected Office (DO/EO/US) mailed a Notification of Defective Response (Form PCT/DO/EO/916) indicating that the declaration filed 23 September 2011 was defective because the declaration had not been executed in accordance with 37 CFR 1.497(a)-(b), in that, the same information

(citizenship, residency, etc) was required for the deceased inventor and legal representative of the deceased inventor.

In response to the Notification of Defective Response dated 03 October 2011, applicants submitted an application data sheet on 05 October 2011.

On 19 October 2011, the United States Designated/Elected Office (DO/EO/US) mailed a "NOTIFICATION OF ACCEPTANCE OF APPLICATION UNDER 35 U.S.C. 371 AND 37 CFR 1.494 OR 1.495" (Form PCT/DO/EO/903) which set forth a 35 U.S.C. 371 completion date of 23 September 2011.

DISCUSSION

A. Issues Arising Under 35 U.S.C. 371

A review of the application file and other United States Patent and Trademark Office records reveals that the requirements of 35 U.S.C. 371(c) for entry into the national stage in the United States of America have not been completed as indicated in the Notification of Acceptance mailed by the DO/EO/US on 19 October 2011. Specifically, the oath or declaration requirement under 35 U.S.C. 371(c)(4) for entry into the national stage in the United States of America has not been properly executed under 37 CFR 1.497 and 37 CFR 1.42. As such, the Notification Of Acceptance (Form PCT/DO/EO/903) and filing receipt mailed 19 October 2011, based as they were on applicants' purported submission of an acceptable declaration under 37 CFR 1.497, are appropriately vacated.

B. Submission Under 37 CFR 1.42

37 CFR 1.42 *When the Inventor is Dead,* states, in part:

> In case of the death of the inventor, the legal representative (executor, administrator, etc.) of the deceased inventor may make the necessary oath or declaration, and apply for and obtain the patent.

The declaration filed on 23 September 2011 is executed by the joint inventors and Gerald Shaber as the "legal representative" of the deceased inventor, Steven Howard Shaber. The declaration submitted appears to have been executed by the proper party under 37 CFR 1.42, however, the declaration does not satisfy the requirements under 37 CFR 1.497(b)(2).

37 CFR 1.497(b)(2) states the following:

> (2) If the person making the oath or declaration or any supplemental oath or declaration is not the inventor (§§ 1.42, 1.43, or § 1.47) the oath or declaration shall state the relationship of the person to the inventor, and, upon information and belief, the facts which the inventor would have been required to state. If the person signing is

> the legal representative of a deceased inventor, the oath or declaration shall also state that the person is a legal representative and the citizenship, residence, and mailing address of the legal representative.

Pursuant to 37 CFR 1.497(b)(2), the citizenship for **both** the deceased inventor and the legal representative must be identified on the declaration (as well as the mailing address and residence information of the legal representative and all other information required under 37 CFR 1.497).

Here, the declaration filed on 23 September 2011 provides the citizenship for only one individual and it is unclear whether this information is for the legal representative or the deceased inventor. Accordingly, the declaration is not in compliance with 37 CFR 1.42 and 37 CFR 1.497(b)(2). (It is noted that this requirement is not satisfied by identifying such information in an Application Data Sheet.)

The 05 October 2011 submission is not a proper reply to the Notification of Defective Response dated 03 October 2011. Because the failure to file the proper response does not appear to have been the result of an inadvertent omission (37 CFR 1.135(a)), applicant will not be accorded a new time period to correct the deficiencies in the response.

CONCLUSION

For the above reasons, the request for status under 37 CFR 1.42 is **REFUSED**.

A proper response must be filed within **ONE MONTH** from the mail date of this notification and must include a proper declaration in compliance with 37 CFR 1.497(a)-(b) executed by all of the named inventors. No extensions of this time limit may be obtained under 37 CFR 1.136(a), but the period for response set forth in the Notification of Missing Requirements mailed 29 July 2011 may be extended up to a maximum of five months. As such, using the maximum period of extensions available, applicants have until 29 February 2012 to file a proper response or the application will be held abandoned as to the United States.

Any further correspondence with respect to this matter may be filed electronically via EFS-Web selecting the document description "Petition for review and processing by the PCT Legal Office" or by mail addressed to Mail Stop PCT, Commissioner for Patents, Office of PCT Legal Administration, P.O. Box 1450, Alexandria, Virginia 22313-1450, with the contents of the letter marked to the attention of the Office of PCT Legal Administration.

Anthony Smith
Attorney-Advisor
Office of PCT Legal Administration
Tel: (571) 272-3298
Fax: (571) 273-0459

UNITED STATES PATENT AND TRADEMARK OFFICE

Commissioner for Patents
United States Patent and Trademark Office
P.O. Box 1450
Alexandria, VA 22313-1450
www.uspto.gov

MAILED
FEB 27 2012
PCT LEGAL ADMINISTRATION

Baker & Daniels LLP- Dow AgroSciences
300 North Meridian Street, Suite 2700
Indianapolis IN 46204

In re Application of
YOUNG et al.
Application No.: 13/144,679
PCT No.: PCT/US2010/021055
Int. Filing Date: 14 January 2010
Priority Date: 14 January 2009
Attorney Docket No.: DAS-P0215-53-US
For: FUNGICIDAL COMPOSITIONS INCLUDING HYDRAZONE DERIVATIVES AND COPPER

DECISION ON PAPERS UNDER 37 CFR 1.42

On 17 January 2012, applicant was mailed a decision dismissing applicant's request for status under 37 CFR 1.42.

On 08 February 2012, applicant filed a response to the previous communication that was accompanied by a revised declaration. The declaration identifies the deceased inventor and states the deceased inventor's country of citizenship, is signed by Gerald Shaber as "legal representative," states his/her relationship to the deceased (i.e., legal representative), and provides the legal representative's country of citizenship and residency. Accordingly, the declaration complies with the requirements of 37 CFR 1.497(b)(2) and 37 CFR 1.42.

The request for status under 37 CFR 1.42 is **GRANTED**.

The application has an international filing date of 14 January 2010 under 35 U.S.C. 363 and will be given a date **08 February 2012** under 35 U.S.C. 371(c)(1), (c)(2), and (c)(4).

The application will be forwarded to the National Stage Processing Branch of the Office of PCT Operations for further processing in accordance with this decision.

Anthony Smith
Attorney-Advisor
Office of PCT Legal Administration
Tel: (571) 272-3298
Fax: (571) 273-0459

UNITED STATES PATENT AND TRADEMARK OFFICE

Commissioner for Patents
United States Patent and Trademark Office
P.O. Box 1450
Alexandria, VA 22313-1450
www.uspto.gov

Baker & Daniels LLP- Dow AgroSciences
300 North Meridian Street, Suite 2700
Indianapolis IN 46204

MAILED

JAN 17 2012

PCT LEGAL ADMINISTRATION

In re Application of	:	
YOUNG et al.	:	
Application No.: 13/144,680	:	DECISION ON
PCT No.: PCT/US2010/021051	:	PAPERS UNDER 37 CFR 1.42
Int. Filing Date: 14 January 2010	:	
Priority Date: 14 January 2009	:	
Attorney Docket No.: DAS-P0215-04-US	:	
For: FUNGICIDAL COMPOSITIONS INCLUDING HYDRAZONE DERIVATIVES AND COPPER	:	

This application is before the Office of PCT Legal Administration for issues arising under 35 U.S.C. 371. Additionally, this decision is issued in response to the declaration submitted under 37 CFR 1.42. No petition fee is required.

BACKGROUND

On 14 January 2010, applicants filed the above-identified international application which claimed a priority date of 14 January 2009. Pursuant to 37 CFR 1.495, the deadline for payment of the basic national fee was to expire 30 months from the priority date, 14 July 2011.

On 14 July 2011, applicants filed a transmittal letter for entry into the national stage in the United States accompanied, inter alia, by the basic national fee and a copy of the international application.

On 27 July 2011, the United States Designated/Elected Office (DO/EO/US) mailed a Notification of Missing Requirements (Form PCT/DO/EO/905) requiring an oath or declaration in compliance with 37 CFR 1.497 and the surcharge fee required under 37 CFR 1.492(h). The notification set a two-month time limit in which to respond.

On 23 September 2011, applicants filed an executed declaration.

On 03 October 2011, the United States Designated/Elected Office (DO/EO/US) mailed a Notification of Defective Response (Form PCT/DO/EO/916) indicating that the declaration filed 23 September 2011 was defective because the declaration had not been executed in accordance with 37 CFR 1.497(a)-(b), in that, the same information

(citizenship, residency, etc) is required for the deceased inventor and legal representative of the deceased inventor.

In response to the Notification of Defective Response dated 03 October 2011, applicants submitted an application data sheet on 05 October 2011.

On 19 October 2011, the United States Designated/Elected Office (DO/EO/US) mailed a "NOTIFICATION OF ACCEPTANCE OF APPLICATION UNDER 35 U.S.C. 371 AND 37 CFR 1.494 OR 1.495" (Form PCT/DO/EO/903) which set forth a 35 U.S.C. 371 completion date of 23 September 2011.

DISCUSSION

A. Issues Arising Under 35 U.S.C. 371

A review of the application file and other United States Patent and Trademark Office records reveals that the requirements of 35 U.S.C. 371(c) for entry into the national stage in the United States of America have not been completed as indicated in the Notification of Acceptance mailed by the DO/EO/US on 19 October 2011. Specifically, the oath or declaration requirement under 35 U.S.C. 371(c)(4) for entry into the national stage in the United States of America has not been properly executed under 37 CFR 1.497 and 37 CFR 1.42. As such, the Notification Of Acceptance (Form PCT/DO/EO/903) and filing receipt mailed 19 October 2011, based as they were on applicants' purported submission of an acceptable declaration under 37 CFR 1.497, are appropriately vacated.

B. Submission Under 37 CFR 1.42

37 CFR 1.42 *When the Inventor is Dead*, states, in part:

> In case of the death of the inventor, the legal representative (executor, administrator, etc.) of the deceased inventor may make the necessary oath or declaration, and apply for and obtain the patent.

The declaration filed on 23 September 2011 is executed by the joint inventors and Gerald Shaber as the "legal representative" of the deceased inventor, Steven Howard Shaber. The declaration submitted appears to have been executed by the proper party under 37 CFR 1.42, however, the declaration does not satisfy the requirements under 37 CFR 1.497(b)(2).

37 CFR 1.497(b)(2) states the following:

> (2) If the person making the oath or declaration or any supplemental oath or declaration is not the inventor (§§ 1.42, 1.43, or § 1.47) the oath or declaration shall state the relationship of the person to the inventor, and, upon information and belief, the facts which the inventor would have been required to state. If the person signing is

> the legal representative of a deceased inventor, the oath or declaration shall also state that the person is a legal representative and the citizenship, residence, and mailing address of the legal representative.

Pursuant to 37 CFR 1.497(b)(2), the citizenship for both the deceased inventor and the legal representative must be identified on the declaration (as well as the mailing address and residence information of the legal representative and all other information required under 37 CFR 1.497).

Here, the declaration filed on 23 September 2011 provides the citizenship for only one individual and it is unclear whether this information is for the legal representative or the deceased inventor. Accordingly, the declaration is not in compliance with 37 CFR 1.42 and 37 CFR 1.497(b)(2). (It is noted that this requirement is not satisfied by identifying such information in an Application Data Sheet.)

The 05 October 2011 submission is not a proper reply to the Notification of Defective Response dated 03 October 2011. Because the failure to file the proper response does not appear to have been the result of an inadvertent omission (37 CFR 1.135(a)), applicant will not be accorded a new time period to correct the deficiencies in the response.

CONCLUSION

For the above reasons, the request for status under 37 CFR 1.42 is **REFUSED**.

A proper response must be filed within **ONE MONTH** from the mail date of this notification and must include a proper declaration in compliance with 37 CFR 1.497(a)-(b) executed by all of the named inventors. No extensions of this time limit may be obtained under 37 CFR 1.136(a), but the period for response set forth in the Notification of Missing Requirements mailed 27 July 2011 may be extended up to a maximum of five months. As such, using the maximum period of extensions available, applicants have until 27 February 2012 to file a proper response or the application will be held abandoned as to the United States.

Any further correspondence with respect to this matter may be filed electronically via EFS-Web selecting the document description "Petition for review and processing by the PCT Legal Office" or by mail addressed to Mail Stop PCT, Commissioner for Patents, Office of PCT Legal Administration, P.O. Box 1450, Alexandria, Virginia 22313-1450, with the contents of the letter marked to the attention of the Office of PCT Legal Administration.

Anthony Smith
Attorney-Advisor
Office of PCT Legal Administration
Tel: (571) 272-3298
Fax: (571) 273-0459

UNITED STATES PATENT AND TRADEMARK OFFICE

Commissioner for Patents
United States Patent and Trademark Office
P.O. Box 1450
Alexandria, VA 22313-1450
www.uspto.gov

MAILED
FEB 27 2012
PCT LEGAL ADMINISTRATION

Baker & Daniels LLP- Dow AgroSciences
300 North Meridian Street, Suite 2700
Indianapolis IN 46204

In re Application of	:	
YOUNG et al.	:	
Application No.: 13/144,680	:	DECISION ON
PCT No.: PCT/US2010/021051	:	PAPERS UNDER 37 CFR 1.42
Int. Filing Date: 14 January 2010	:	
Priority Date: 14 January 2009	:	
Attorney Docket No.: DAS-P0215-04-US	:	
For: FUNGICIDAL COMPOSITIONS INCLUDING HYDRAZONE DERIVATIVES AND COPPER	:	

On 17 January 2012, applicant was mailed a decision dismissing applicant's request for status under 37 CFR 1.42.

On 08 February 2012, applicant filed a response to the previous communication that was accompanied by a revised declaration. The declaration identifies the deceased inventor and states the deceased inventor's country of citizenship, is signed by Gerald Shaber as "legal representative," states his/her relationship to the deceased (i.e., legal representative), and provides the legal representative's country of citizenship and residency. Accordingly, the declaration complies with the requirements of 37 CFR 1.497(b)(2) and 37 CFR 1.42.

The request for status under 37 CFR 1.42 is **GRANTED**.

The application has an international filing date of 14 January 2010 under 35 U.S.C. 363 and will be given a date **08 February 2012** under 35 U.S.C. 371(c)(1), (c)(2), and (c)(4).

The application will be forwarded to the National Stage Processing Branch of the Office of PCT Operations for further processing in accordance with this decision.

Anthony Smith
Attorney-Advisor
Office of PCT Legal Administration
Tel: (571) 272-3298
Fax: (571) 273-0459

UNITED STATES PATENT AND TRADEMARK OFFICE

Commissioner for Patents
United States Patent and Trademark Office
P.O. Box 1450
Alexandria, VA 22313-1450
www.uspto.gov

MAILED

NOV 17 2011

PCT LEGAL ADMINISTRATION

RISSMAN HENDRICKS & OLIVERIO, LLP
100 Cambridge Street
Suite 2101
BOSTON MA 02114

In re Application of: CAIMI, Giuseppe
U.S. Application No.: 13/144,694
PCT No.: PCT/IT2010/000341
International Filing Date: 22 February 2010
Priority Date: 23 February 2009
Attorney's Docket No.: P026-7000US0
For: DEVICE FOR MOVING SLIDING DOORS

DECISION ON SUBMISSION UNDER 37 CFR 1.42

This decision is issued in response to applicants' 04 October 2011 filing of a declaration executed on behalf of deceased co-inventor Giuseppe CAIMI by his legal representative, considered herein as a submission under 37 CFR 1.42.

BACKGROUND

On 22 February 2010, applicants filed international application PCT/IT2010/000341. The international application claimed a priority date of 23 February 2009, and it designated the United States. On 26 August 2010, the International Bureau (IB) communicated a copy of the international application to the United States Patent and Trademark Office (USPTO). The deadline for submission of the basic national fee was thirty months from the priority date, i.e., 23 August 2011.

On 14 July 2011, applicants filed a Transmittal Letter for entry into the national stage in the United States accompanied by, among other materials, payment of the basic national fee.

On 26 August 2011, the United States Designated/Elected Office (DO/EO/US) mailed a "Notification Of Missing Requirements" (Form PCT/DO/EO/905) requiring submission of an oath or declaration in compliance with 37 CFR 1.497 and the surcharge for filing the oath or declaration later than thirty months after the priority date.

On 04 October 2011, applicant filed a response to the Notification Of Missing Requirements that included payment of the required surcharge and a declaration executed on behalf of deceased sole-inventor Giuseppe CAIMI by his legal representative, Adele CIAMI. The declaration is considered herein under 37 CFR 1.42 and 1.497.

DISCUSSION

37 CFR 1.42 states in part:

> In case of the death of the inventor, the legal representative (executor, administrator, etc.) of the deceased inventor may make the necessary oath or declaration, and apply for and obtain the patent.

Section 409.01(a) of the MPEP states that the application can also be executed by all of the heirs of the deceased inventor, where no legal representative has been appointed or is required to be appointed by law.

37 CFR 1.497(b)(2) states the following:

> If the person making the oath or declaration or any supplemental oath or declaration is not the inventor (§§ 1.42, 1.43, or 1.47) the oath or declaration shall state the relationship of the person to the inventor, and, upon information and belief, the facts which the inventor would have been required to state. If the person is the legal representative of a deceased inventor, the oath or declaration shall also state that the person is a legal representative and the citizenship, residence, and mailing address of the legal representative.

Pursuant to 37 CFR 1.497(b)(2), the citizenship for both the deceased inventor and the legal representative must be identified on the declaration, as well as the mailing address and residence information of the legal representative and all other information required under 37 CFR 1.497. Here, the declaration filed 04 October 2011 includes the required citizenship, residence, and mailing address information for Adele CAIMI, the person signing the declaration on behalf of the deceased inventor, as well as the required name and citizenship of the deceased inventor. The declaration also states the relationship of Adele CAIMI to the deceased inventor (i.e., "legal representative"), as also required. The declaration therefore includes all information required under 37 CFR 1.497(b)(2).

CONCLUSION

Applicant's request for status under 37 CFR 1.42 with respect to deceased inventor Giuseppe CAIMI is **GRANTED**.

The application is being referred to the National Stage Processing Branch of the Office of PCT Operations for further processing in accordance with this decision. The date under 35 U.S.C. 371(c)(1), (c)(2), and (c)(4) is 04 October 2011.

/RichardMRoss/

Richard M. Ross
Attorney Advisor
Office of PCT Legal Administration
Telephone: (571) 272-3296

UNITED STATES PATENT AND TRADEMARK OFFICE

Commissioner for Patents
United States Patent and Trademark Office
P.O. Box 1450
Alexandria, VA 22313-1450
www.uspto.gov

MAILED

AUG 22 2011

PCT LEGAL ADMINISTRATION

FROMMER LAWRENCE & HAUG
745 FIFTH AVENUE- 10TH FL.
NEW YORK NY 10151

In re Application of	:	
GLOS, et al.	:	DECISION ON PETITION
Application No.: 13/144,767	:	
PCT No.: PCT/EP2009/067045	:	UNDER 37 CFR 1.137(b)
Int. Filing Date: 14 December 2009	:	
Priority Date: 14 January 2009	:	
Atty. Docket No.: 512425-2221	:	
For: METHOD FOR PRODUCING COLD CURE FOAMS	:	

The petition to revive under 37 CFR 1.137(b) filed 15 July 2011 in the above-captioned application is hereby **GRANTED** as follows:

Applicant's statement that "the entire delay in filing the required reply form the due date for the required reply until the filing of a grantable petition under 37 CFR 1.137(b) was unintentional" and the prompt filing of the petition satisfies the requirement of 37 CFR 1.137(b)(3).

A review of the application file reveals that applicant has provided the proper reply in the form of payment of the full, U.S. Basic National Fee. Therefore, the request to revive the application abandoned under 35 U.S.C. 371(d) is granted as to the National stage in the United States of America.

This application is being returned to the United States Designated/Elected Office (DO/EO/US) for treatment in accordance with this decision.

Derek A. Putonen
Attorney Advisor
Office of PCT Legal Administration
Tel: (571) 272-3294

PTO/SB/20PCT-JP (05-10)
Approved for use through 01/31/2012. OMB 0651-0058
U.S. Patent and Trademark Office; U. S. DEPARTMENT OF COMMERCE
Under the Paperwork Reduction Act of 1995, no persons are required to respond to a collection of information unless it displays a valid OMB control number.

REQUEST FOR PARTICIPATION IN THE PATENT COOPERATION TREATY - PATENT PROSECUTION HIGHWAY (PCT-PPH) PILOT PROGRAM BETWEEN THE JAPAN PATENT OFFICE (JPO) AND THE USPTO

Attorney Docket No.: 1163-0925PUS1

Application No:	13/144,852	Filing date:	July 15, 2011
First Named Inventor:	Fumihiro MINAMI		
Title of the Invention:	LIGHTING DEVICE FOR A HEADLAMP LIGHT SOURCE		

THIS REQUEST FOR PARTICIPATION IN THE PCT-PPH PILOT PROGRAM ALONG WITH THE REQUIRED DOCUMENTS MUST BE SUBMITTED VIA EFS-WEB. INFORMATION REGARDING EFS-WEB IS AVAILABLE AT HTTP://WWW.USPTO.GOV/EBC/EFS_HELP.HTML

APPLICANT HEREBY REQUESTS PARTICIPATION IN THE PCT-PPH PROGRAM AND PETITIONS TO MAKE THE ABOVE-IDENTIFIED APPLICATION SPECIAL UNDER THE PCT-PPH PROGRAM.

The above-identified application is (1) a national stage entry of the corresponding PCT application, or (2) a national stage entry of another PCT application which claims priority to the corresponding PCT application, or (3) a national application that claims domestic/ foreign priority to the corresponding PCT application, or (4) a national application which forms the basis for the priority claim in the corresponding PCT application, or (5) a continuing application of a U.S. application that satisfies one of (1) to (4) above, or (6) a U.S. application that claims domestic benefit to a U.S. provisional application which forms the basis for the priority claim in the corresponding PCT application.

The corresponding PCT application number(s) is/are: PCT/JP2009/005840

The international date of the corresponding PCT application(s) is/are: November 4, 2009

I. List of Required Documents:

a. **A copy of the latest international work product (WO/ISA, WO/IPEA, or IPER) in the above–identified corresponding PCT application(s)**

- [✓] Is attached.
- [ ] Is not attached because the document is already in the U.S. application.

b. **A copy of all claims which were indicated as having novelty, inventive step and industrial applicability in the above-identified corresponding PCT application(s).**

- [✓] Is attached.
- [ ] Is not attached because the document is already in the U.S. application.

c. **English translations of the documents in a. and b. above are attached (if the documents are not in the English language). A statement that the English translation is accurate is attached for the document in b. above.**

This collection of information is required by 35 U.S.C. 119, 37 CFR 1.55, and 37 CFR 1.102(d). The information is required to obtain or retain a benefit by the public, which is to file (and by the USPTO to process) an application. Confidentiality is governed by 35 U.S.C. 122 and 37 CFR 1.11 and 1.14. This collection is estimated to take 2 hours to complete, including gathering, preparing, and submitting the completed application form to the USPTO. Time will vary depending upon the individual case. Any comments on the amount of time you require to complete this form and/or suggestions for reducing this burden should be sent to the Chief Information Officer, U.S. Patent and Trademark Office, U.S. Department of Commerce, P.O. Box 1450, Alexandria, VA 22313-1450. DO NOT SEND FEES OR COMPLETED FORMS TO THIS ADDRESS.

Approved for use through 01/31/2012. OMB 0651-0058
U.S.Patent and Trademark Office; U.S. DEPARTMENT OF COMMERCE

Under the Paperwork Reduction Act of 1995, no persons are required to respond to a collection of information unless it displays a valid OMB control number.

REQUEST FOR PARTICIPATION IN THE PCT-PPH PILOT PROGRAM BETWEEN THE JPO AND THE USPTO

(continued)

Application No.:	13/144,852
First Named Inventor:	Fumihiro MINAMI

d. **(1) An information disclosure statement listing the documents cited in the international work products (ISR, WO/ISA, WO/IPEA, IPER) of the corresponding PCT application.**

☐ Is attached

☑ Has already been filed in the above-identified U.S. application on July 15, 2011

(2) Copies of all documents (except) for U.S. patents or U.S. patent application publications)

☐ Are attached.

☑ Have already been filed in the above-identified U.S. application on July 15, 2011

II. Claims Correspondence Table:

Claims in US Application	Patentable Claims in the corresponding PCT Application	Explanation regarding the correspondence
1	1	Identical
2	2	Identical
3	3	Identical
4	4	Identical
5	5	Identical
6	6	Identical
7	7	Identical
8	8	Identical
9	9	Identical
10	10	Identical
11	11	Identical
12	12	Identical
13	13	Identical
14	14	Identical
15	15	Identical
16	16	Identical
17	17	Identical
18	18	Identical (except JP claim is multi-dependent)

III. All the claims in the US application sufficiently correspond to the patentable claims in the corresponding PCT application.

Signature	Date January 30, 2012
Name (Print/Typed) D. Richard Anderson	Registration Number 40439

PATENT COOPERATION TREATY

TRANSLATION

From the
INTERNATIONAL SEARCHING AUTHORITY

To:

PCT

WRITTEN OPINION OF THE
INTERNATIONAL SEARCHING AUTHORITY

(PCT Rule 43*bis*.1)

Date of mailing *(day/month/year)*	08.12.2009
Applicant's or agent's file reference 602802WO01	**FOR FURTHER ACTION** See paragraph 2 below

International application No.	International filing date *(day/month/year)*	Priority date *(day/month/year)*
PCT/JP2009/005840	04.11.2009	16.02.2009

International Patent Classification (IPC) or both national classification and IPC
F21S8/10(2006.01)i, F21W101/10(2006.01)n

Applicant
Mitsubishi Electric Corporation

1. This opinion contains indications relating to the following items:

- [x] Box No. I — Basis of the opinion
- [ ] Box No. II — Priority
- [ ] Box No. III — Non-establishment of opinion with regard to novelty, inventive step and industrial applicability
- [ ] Box No. IV — Lack of unity of invention
- [x] Box No. V — Reasoned statement under Rule 43*bis*.1(a)(i) with regard to novelty, inventive step or industrial applicability; citations and explanations supporting such statement
- [ ] Box No. VI — Certain documents cited
- [ ] Box No. VII — Certain defects in the international application
- [ ] Box No. VIII — Certain observations on the international application

2. **FURTHER ACTION**

If a demand for international preliminary examination is made, this opinion will be considered to be a written opinion of the International Preliminary Examining Authority ("IPEA") except that this does not apply where the applicant chooses an Authority other than this one to be the IPEA and the chosen IPEA has notified the International Bureau under Rule 66.1*bis*(b) that written opinions of this International Searching Authority will not be so considered.

If this opinion is, as provided above, considered to be a written opinion of the IPEA, the applicant is invited to submit to the IPEA a written reply together, where appropriate, with amendments, before the expiration of 3 months from the date of mailing of Form PCT/ISA/220 or before the expiration of 22 months from the priority date, whichever expires later.

For further options, see Form PCT/ISA/220.

3. For further details, see notes to Form PCT/ISA/220.

Name and mailing address of the ISA/JP	Date of completion of this opinion	Authorized officer
Facsimile No.		Telephone No.

WRITTEN OPINION OF THE INTERNATIONAL SEARCHING AUTHORITY

International application No.
PCT/JP2009/005840

Box No. I **Basis of this opinion**

1. With regard to the **language**, this opinion has been established on the basis of:

   ☒ the international application in the language in which it was filed

   ☐ a translation of the international application into _____, which is the language of a translation furnished for the purposes of international search (Rules 12.3(a) and 23.1(b)).

2. ☐ This opinion has been established taking into account the **rectification of an obvious mistake** authorized by or notified to this Authority under Rule 91 (Rule 43*bis*.1(a))

3. With regard to any **nucleotide and/or amino acid sequence** disclosed in the international application and necessary to the claimed invention, this opinion has been established on the basis of:

   a. type of material

   ☐ a sequence listing

   ☐ table(s) related to the sequence listing

   b. format of material

   ☐ on paper

   ☐ in electronic form

   c. time of filing/furnishing

   ☐ contained in the international application as filed

   ☐ filed together with the international application in electronic form

   ☐ furnished subsequently to this Authority for the purposes of search

4. ☐ In addition, in the case that more than one version or copy of a sequence listing and/or table(s) relating thereto has been filed or furnished, the required statements that the information in the subsequent or additional copies is identical to that in the application as filed or does not go beyond the application as filed, as appropriate, were furnished.

5. Additional comments:

WRITTEN OPINION OF THE INTERNATIONAL SEARCHING AUTHORITY

International application No.
PCT/JP2009/005840

Box No. V **Reasoned statement under Rule 43bis.1(a)(i) with regard to novelty, inventive step or industrial applicability; citations and explanations supporting such statement**

1. Statement

Novelty (N)	Claims	1-18	YES
	Claims		NO
Inventive step (IS)	Claims	1-18	YES
	Claims		NO
Industrial applicability (IA)	Claims	1-18	YES
	Claims		NO

2. Citations and explanations:

Document 1: JP 2008-10216 A (Matsushita Electric Works, Ltd.), 17 January 2008, entire text, all drawings

Document 2: JP 2008-305641 A (Koito Manufacturing Co., Ltd.), 18 December 2008, entire text, all drawings

Document 3: JP 2008-10217 A (Matsushita Electric Works, Ltd.), 17 January 2008, entire text, all drawings

Document 4: JP 2005-302743 A (Koito Manufacturing Co., Ltd.), 27 October 2005, entire text, all drawings

Document 5: JP 2004-179018 A (Koito Manufacturing Co., Ltd.), 24 June 2004, entire text, all drawings

Document 6: JP 10-172303 A (Koito Manufacturing Co., Ltd.), 26 June 1998, entire text, all drawings

Document 7: JP 7-57503 A (Koito Manufacturing Co., Ltd.), 03 March 1995, entire text, all drawings

Document 8: JP 4-26002 A (Koito Manufacturing Co., Ltd.), 29 January 1992, entire text, all drawings

The invention as in claims 1-18 is not disclosed in any of the documents cited in the ISR, and thus is novel and involves an inventive step.

特 許 協 力 条 約

発信人　日本国特許庁（国際調査機関）

代理人
高橋省吾
様

あて名
〒100-8310
日本国東京都千代田区丸の内二丁目７番３号三菱電機株式会社　知的財産センター内

ＰＣＴ
国際調査機関の見解書
（法施行規則第 40 条の 2）
〔ＰＣＴ規則 43 の 2.1〕

発送日 （日.月.年）	０８．１２．２００９
出願人又は代理人 の書類記号　602802W001	今後の手続きについては、下記２を参照すること。

国際出願番号	国際出願日	優先日
ＰＣＴ／ＪＰ２００９／００５８４０	（日.月.年）　０４．１１．２００９	（日.月.年）　１６．０２．２００９

国際特許分類（ＩＰＣ）Int.Cl. F21S8/10(2006.01)i, F21W101/10(2006.01)n

出願人（氏名又は名称）
三菱電機株式会社

１．この見解書は次の内容を含む。
- ☑ 第Ｉ欄　見解の基礎
- ☐ 第Ⅱ欄　優先権
- ☐ 第Ⅲ欄　新規性、進歩性又は産業上の利用可能性についての見解の不作成
- ☐ 第Ⅳ欄　発明の単一性の欠如
- ☑ 第Ｖ欄　ＰＣＴ規則 43 の 2.1(a)(i)に規定する新規性、進歩性又は産業上の利用可能性についての見解、それを裏付けるための文献及び説明
- ☐ 第Ⅵ欄　ある種の引用文献
- ☐ 第Ⅶ欄　国際出願の不備
- ☐ 第Ⅷ欄　国際出願に対する意見

２．今後の手続き
国際予備審査の請求がされた場合は、出願人がこの国際調査機関とは異なる国際予備審査機関を選択し、かつ、その国際予備審査機関がＰＣＴ規則 66.1 の 2(b)の規定に基づいて国際調査機関の見解書を国際予備審査機関の見解書とみなさない旨を国際事務局に通知していた場合を除いて、この見解書は国際予備審査機関の最初の見解書とみなされる。

この見解書が上記のように国際予備審査機関の見解書とみなされる場合、様式ＰＣＴ／ＩＳＡ／２２０を送付した日から３月又は優先日から２２月のうちいずれか遅く満了する期限が経過するまでに、出願人は国際予備審査機関に、適当な場合は補正書とともに、答弁書を提出することができる。

さらなる選択肢は、様式ＰＣＴ／ＩＳＡ／２２０を参照すること。

３．さらなる詳細は、様式ＰＣＴ／ＩＳＡ／２２０の備考を参照すること。

見解書を作成した日
２７．１１．２００９

名称及びあて先	特許庁審査官（権限のある職員）	３Ｘ	６９０８
日本国特許庁（ＩＳＡ／ＪＰ） 郵便番号１００－８９１５ 東京都千代田区霞が関三丁目４番３号	和泉　等 電話番号　０３－３５８１－１１０１　内線　３３７２		

国際調査機関の見解書

国際出願番号　ＰＣＴ／ＪＰ２００９／００５８４０

第Ｉ欄　見解の基礎

１．言語に関し、この見解書は以下のものに基づき作成した。

☑ 出願時の言語による国際出願

☐ 出願時の言語から国際調査のための言語である ＿＿＿＿＿＿ 語に翻訳された、この国際出願の翻訳文（ＰＣＴ規則12.3(a)及び23.1(b)）

２．☐ この見解書は、ＰＣＴ規則 91 の規定により国際調査機関が認めた又は国際調査機関に通知された明らかな誤りの訂正を考慮して作成した（ＰＣＴ規則 43 の 2.1(b)）。

３．この国際出願で開示されたヌクレオチド又はアミノ酸配列に関して、以下に基づき見解書を作成した。

ａ．タイプ　☐ 配列表

☐ 配列表に関連するテーブル

ｂ．フォーマット　☐ 紙形式

☐ 電子形式

ｃ．提出時期　☐ 出願時の国際出願に含まれていたもの

☐ この国際出願と共に電子形式により提出されたもの

☐ 出願後に、調査のために、この国際調査機関に提出されたもの

４．☐ さらに、配列表又は配列表に関連するテーブルを提出した場合に、出願後に提出した配列若しくは追加して提出した配列が出願時に提出した配列と同一である旨、又は、出願時の開示を超える事項を含まない旨の陳述書の提出があった。

５．補足意見：

国際調査機関の見解書

国際出願番号　ＰＣＴ／ＪＰ２００９／００５８４０

第Ｖ欄　新規性、進歩性又は産業上の利用可能性についてのＰＣＴ規則43の2.1(a)(i)に定める見解、それを裏付ける文献及び説明

１．　見解

新規性（N）	請求項	１－１８	有
	請求項		無
進歩性（ＩＳ）	請求項	１－１８	有
	請求項		無
産業上の利用可能性（ＩＡ）	請求項	１－１８	有
	請求項		無

２．　文献及び説明

文献１：ＪＰ　２００８－１０２１６　Ａ（松下電工株式会社）２００８．０１．１７，全文，全図
文献２：ＪＰ　２００８－３０５６４１　Ａ（株式会社小糸製作所）２００８．１２．１８，全文，全図
文献３：ＪＰ　２００８－１０２１７　Ａ（松下電工株式会社）２００８．０１．１７，全文，全図
文献４：ＪＰ　２００５－３０２７４３　Ａ（株式会社小糸製作所）２００５．１０．２７，全文，全図
文献５：ＪＰ　２００４－１７９０１８　Ａ（株式会社小糸製作所）２００４．０６．２４，全文，全図
文献６：ＪＰ　１０－１７２３０３　Ａ（株式会社小糸製作所）１９９８．０６．２６，全文，全図
文献７：ＪＰ　７－５７５０３　Ａ（株式会社小糸製作所）１９９５．０３．０３，全文，全図
文献８：ＪＰ　４－２６００２　Ａ（株式会社小糸製作所）１９９２．０１．２９，全文，全図

請求項１－１８に係る発明は、国際調査報告で引用された何れの文献にも開示されておらず、新規性及び進歩性を有する。

S T A T E M E N T

International Application No.PCT/JP2009/005840

I, Hideaki TAZAWA, a Japanese citizen of c/o Sanno Patent Office, Akasaka Sanno Center Bldg. 5F, 12-4, Nagata-cho 2-chome, Chiyoda-ku, Tokyo, Japan, do hereby solemnly and sincerely declare as follows:

1. I am well acquainted with both the Japanese language and the English language.

2. I personally made the following translation.

3. The following is a true translation into the English language of the claim(s) from the PCT application No. PCT/JP2009/005840 which was filed on November 4, 2009.

And I make this solemn declaration conscientiously believing the same to be true.

This 8th day of December, 2011

Hideaki TAZAWA

CLAIMS

1. A lighting device for a headlamp light source to be attached to an opening portion provided at a bottom of a headlamp case that houses a light source, comprising:

an output connector to which an output harness for supplying power to the light source is connected,

wherein the output connector is formed in such a manner that when the lighting device for a headlamp light source is attached to the headlamp case, the bottom of a connection opening to which the output harness of the output connector is connected is disposed at a higher position than a bottom face inside the headlamp case.

2. The lighting device for a headlamp light source according to claim 1, wherein the connection opening is opened sideways.

3. The lighting device for a headlamp light source according to claim 1, wherein the output connector has a drain groove extending from inside the connection opening towards an outer edge of the output connector.

4. The lighting device for a headlamp light source according to claim 1, wherein one end of an output wire is disposed as a terminal portion in the connection opening of the output connector, and the terminal portion is exposed inside the headlamp case.

5. The lighting device for a headlamp light source according to claim 2, further comprising: an input connector to which an input harness for supplying power to the lighting device for a light source is connected,

wherein a connection opening of the input connector is opened in substantially the same direction as a direction in which the connection opening of the output connector is opened.

6. The lighting device for a headlamp light source according to claim 1, wherein the output connector has a vent hole running through from inside to outside the lighting device.

7. The lighting device for a headlamp light source according to claim 6, wherein an opening portion of the vent hole is provided inside the connection opening of the output connector.

8. The lighting device for a headlamp light source according to claim 6, wherein the output connector has a protrusion that protrudes at a higher position than the connection opening of the output connector, and an opening portion of the vent hole is provided at the top of the protrusion.

9. The lighting device for a headlamp light source according to claim 6, wherein a moisture-permeable filter is provided at the opening portion of the vent hole.

10. The lighting device for a headlamp light source according to claim 1, wherein the output connector is connected via an output wire to a board that outputs power to be supplied to the light source, and

the output wire has a bent portion halfway between the board and the output connector.

11. The lighting device for a headlamp light source according

to claim 1, wherein the output connector is integrally formed with a case of the lighting device for a light source.

12. The lighting device for a headlamp light source according to claim 1, wherein the output connector is mounted to the case of the lighting device for a light source by way of a water-proofing member.

13. The lighting device for a headlamp light source according to claim 1, wherein the output connector comprises a terminal holding portion that holds a terminal of the output connector, and a cover portion mounted to the terminal holding portion.

14. The lighting device for a headlamp light source according to claim 9, wherein the output connector comprises a terminal holding portion that holds a terminal of the connector, and a cover portion mounted to the terminal holding portion, and

the cover portion is mounted to the terminal holding portion to cover a surface of the moisture-permeable filter.

15. The lighting device for a headlamp light source according to claim 12, wherein the output harness for supplying power to the light source comprises a power output wire and a shielding member for shielding electromagnetic emission from the power output wire, and

the output connector is mounted with a screw to a grounded case of the lighting device for a light source together with a connection terminal to which the shielding member is connected.

16. The lighting device for a headlamp light source according

to claim 1, wherein the output harness has a connector that is inserted into the connection opening of the output connector, and

the position of the output connector is set such that when the lighting device for a headlamp light source is attached to the headlamp case, outer peripheries of the output connector and a connector of the output harness are disposed inward of the opening portion that is provided at the bottom of the headlamp case.

17. The lighting device for a headlamp light source according to claim 1, the device attached to the opening portion provided at the bottom of the headlamp case that houses the light source, comprising:

a board that outputs power to be supplied to the light source;

a case that houses the board; and

an output connector which is provided at the top of the case and connected to the board via an output wire, and to which an output harness for supplying power to the light source is connected,

wherein the output connector is integrally formed with the case.

18. The lighting device for a headlamp light source according to any one of claims 1 to 17, comprising:

a plurality of output wires that connect the output connector and a board that outputs power to be supplied to the light source, such that one end portion of each of the output wires forms a terminal portion of the output connector;

a detection unit for detecting a resistance value between the terminal portions; and

a failsafe unit for discontinuing an operation of the lighting device for a headlamp light source,

wherein the failsafe unit discontinues the operation of the lighting device for a headlamp light source when the resistance between the terminal portions drops.

請求の範囲

[請求項1]　光源を収容するヘッドランプケースの底部に設けられた開口部に取り付けられるヘッドランプ光源用点灯装置であって、

前記光源に電力を供給するための出力ハーネスが接続される出力コネクタを備え、

前記出力コネクタは、当該ヘッドランプ光源用点灯装置を前記ヘッドランプケースに取り付けた場合に、当該出力コネクタの前記出力ハーネスが接続される接続口の底部が、前記ヘッドランプケース内部の底面よりも高い位置に配置されるように形成されることを特徴とするヘッドランプ光源用点灯装置。

[請求項2]　前記接続口は、横向きに開口することを特徴とする請求項１記載のヘッドランプ光源用点灯装置。

[請求項3]　前記出力コネクタは、前記接続口の内部から当該出力コネクタの外縁に向かって延びる排水溝を有することを特徴とする請求項１記載のヘッドランプ光源用点灯装置。

[請求項4]　前記出力線の一端は、前記出力コネクタの接続口内に端子部として配置され、

前記端子部は、前記ヘッドランプケース内部に露出していることを特徴とする請求項１記載のヘッドランプ光源用点灯装置。

[請求項5]　当該光源用点灯装置に電力を供給するための入力ハーネスが接続される入力コネクタをさらに備え、

前記入力コネクタの接続口は、上記出力コネクタの接続口の開口する方向と略同方向に開口することを特徴とする請求項２記載のヘッドランプ光源用点灯装置。

[請求項6]　前記出力コネクタは当該点灯装置の内部から外部に貫通する通気口を有することを特徴とする請求項１記載のヘッドランプ光源用点灯装置。

[請求項7]　前記通気口の開口部は、前記出力コネクタの接続口の内部に設けら

れていることを特徴とする請求項６項記載のヘッドランプ光源用点灯装置。

[請求項8]　前記出力コネクタは、当該出力コネクタの接続口よりも高い位置に突出した突出部を有し、前記通気口の開口部は前記突出部の上部に設けられることを特徴とする請求項６記載のヘッドランプ光源用点灯装置。

[請求項9]　前記通気口の開口部には、透湿性のフィルタが設けられていることを特徴とする請求項６記載のヘッドランプ光源用点灯装置。

[請求項10]　前記出力コネクタは、前記光源へ供給するための電力を出力する基板と出力線を介して接続されており、

前記出力線は、前記基板から前記出力コネクタに至るまでの途中に曲げ部を有することを特徴とする請求項１記載のヘッドランプ光源用点灯装置。

[請求項11]　前記出力コネクタは、当該光源用点灯装置のケースと一体に形成されることを特徴とする請求項１記載のヘッドランプ光源用点灯装置。

[請求項12]　前記出力コネクタは、当該光源用点灯装置のケースに防水部材を介して取り付けられることを特徴とする請求項１記載のヘッドランプ光源用点灯装置。

[請求項13]　前記出力コネクタは、当該出力コネクタの端子を保持する端子保持部と、当該端子保持部に取り付けられるカバー部とからなることを特徴とする請求項１記載のヘッドランプ光源用点灯装置。

[請求項14]　前記出力コネクタは、当該コネクタの端子を保持する端子保持部と、当該端子保持部に取り付けられるカバー部とからなり、

前記カバー部は、前記透湿性フィルタの表面を覆うように前記端子保持部に取り付けられることを特徴とする請求項９に記載のヘッドランプ光源用点灯装置。

[請求項15]　前記光源に電力を供給するための出力ハーネスは、電力出力線及び当該電力出力線からの電磁放出を遮断するためのシールド部材とから

構成されるものであって、

前記出力コネクタは、前記シールド部材が接続される接続端子と共に、当該光源用点灯装置の接地されたケースにネジにより取り付けられることを特徴とする請求項１２記載のヘッドランプ光源用点灯装置。

[請求項16] 前記出力ハーネスは、前記出力コネクタの接続口内に挿入されるコネクタを有するものであって、

当該ヘッドランプ光源用点灯装置を前記ヘッドランプケースに取り付けたときに、前記出力コネクタおよび出力ハーネスに付属するコネクタの外周部が、前記ヘッドランプケースの底部に設けられた開口部の内側に配置されるように、出力コネクタの位置を設定することを特徴とする請求項１記載のヘッドランプ光源用点灯装置。

[請求項17] 光源を収容するヘッドランプケースの底部に設けられた開口部に取り付けられるヘッドランプ光源用点灯装置であって、

前記光源に供給するための電力を出力する基板と、

前記基板を収容するケースと、

前記ケースの上部に設けられ、前記基板と出力線を介して接続され、前記光源に電力を供給するための出力ハーネスが接続される出力コネクタと

を備え、

前記出力コネクタは前記ケースと一体に構成されることを特徴とする請求項１に記載のヘッドランプ光源用点灯装置。

[請求項18] 前記出力コネクタと前記光源へ供給するための電力を出力する基板とを接続し、一端部が前記出力コネクタの端子部を形成する複数の出力線と、

前記端子部間の抵抗値を検出する検出手段と、

当該ヘッドランプ光源用点灯装置の動作を停止するフェールセーフ手段とを備え、

前記フェールセーフ手段は、前記端子部間の抵抗が低下した場合に、当該ヘッドランプ光源用点灯装置の動作を停止することを特徴とする請求項１から１７のいずれか１項に記載のヘッドランプ光源用点灯装置。

UNITED STATES PATENT AND TRADEMARK OFFICE

Commissioner for Patents
United States Patent and Trademark Office
P.O. Box 1450
Alexandria, VA 22313-1450
www.uspto.gov
uninquivical

MAILED
MAR 30 2012
OFFICE OF PETITIONS

BIRCH STEWART KOLASCH & BIRCH
PO BOX 747
FALLS CHURCH, VA 22040-0747

In re Application of	: DECISION ON REQUEST TO
Fumihiro Minami, et al.	: PARTICIPATE IN THE PATENT
Application No.: 13/144,852	: PROSECUTION HIGHWAY
Filed: July 15, 2011	: PROGRAM AND PETITION
Attorney Docket No.: 1163-0925PUS1	: TO MAKE SPECIAL UNDER
For: **LIGHTING DEVICE FOR A**	: 37 CFR 1.102(a)
HEADLAMP LIGHT SOURCE	:

This is a decision on the request to participate in the PCT Patent Prosecution Highway (PCT-PPH) pilot program and the petition under 37 CFR 1.102(a), filed on January 30, 2012 to make the above-identified application special.

The request and petition are **GRANTED**.

Discussion

A grantable request to participate in the PCT-PPH pilot program and petition to make special require:

(1) The U.S. application must have an eligible relationship to one or more PCT applications where the ISA or IPEA are the JPO, EPO, KIPO, NPI, NBPR, IPAU, APO, RU, SPTO, PRV, SIPO or USPTO;

(2) At least one claim in the PCT application has novelty, inventive step, and industrial applicability and must be free of any observations in Box VIII in the latest work product in the international stage or applicant must identify and explain why the claim(s) is/are not subject to the observation in Box VIII;

(3) Applicant must submit a copy of the claim(s) from the PCT application(s) that have novelty, inventive step, and industrial applicability along with an English translation thereof and a statement that the English translation is accurate, if the claims are not in the English language;

(4) All the claims in the U.S. application must sufficiently correspond or be amended to sufficiently correspond to the claim(s) that have novelty, inventive step, and industrial applicability in the PCT application(s);

(5) Examination of the U.S. application has not begun;

(6) Applicant must submit a copy of the latest international work product from the PCT application indicating that the claim(s) have novelty, inventive step, and industrial applicability along with an English translation thereof and a statement that the English translation is accurate if the latest international work product is not in the English language;

(7) Applicant must submit an IDS listing the documents cited by the PCT examiner in the international work product along with copies of documents except U.S. patents or U.S. patent application publications.

(8) Applicant is required to submit a claims correspondence table in English which indicates how all the claims in the U.S. application correspond to the claims indicated as having novelty, inventive step and industrial applicability in the latest international work product.

The request to participate in the PCT-PPH pilot program and petition comply with the above requirements. Accordingly, the above-identified application has been accorded "special" status.

Telephone inquiries concerning this decision should be directed to the undersigned at 571-272-3204.

All other inquiries concerning the examination or status of the application is accessible in the PAIR system at http://www.uspto.gov/ebc.index.html.

This application will be forwarded to the examiner for action on the merits commensurate with this decision.

/SDB/

Sherry D. Brinkley
Petitions Examiner
Office of Petitions

UNITED STATES PATENT and TRADEMARK OFFICE

COMMISSIONER FOR PATENTS
UNITED STATES PATENT AND TRADEMARK OFFICE
P.O BOX 1450
ALEXANDRIA, VA 22313-1450
www.uspto.gov

Douglas Mueller
Hamre Schumann, Mueller & Larson, P.C.
P.O.Box 2650
Minneapolis, MN 55402

MAILED
SEP 14 2011
PCT LEGAL ADMINISTRATION

In re Application of	:	DECISION ON
SUDO :	:	
Application No.: 13/144,911	:	
PCT No.: PCT/JP2009/065539	:	
Filing Date: 05 September 2009	:	PETITION UNDER
Priority Date: 30 September 2008	:	
Attorney's Docket No.: 20344.005USWO	:	
For: Synthetic Resin Cap And Method of Manufacturing	:	
Synthetic Resin Cap	:	37 CFR 1.137(b)

This decision is in response to applicant's "Petition For Revival Of An International Application For Patent Designating The U.S. Abandoned Unintentionally Under 37 CFR 1.137(b)," filed 15 July 2011.

BACKGROUND

On 05 September 2009, this international application was filed, claiming an earliest priority date of 30 September 2008.

The deadline for paying the basic national fee in the United States under 35 U.S.C. 371 and 37 CFR 1.495 was 30 March 2011. This international application became abandoned with respect to the United States at midnight on 30 March 2011 for failure to pay the required basic national fee.

On 15 July 2011, applicant filed in the United States Patent and Trademark Office (PTO) a transmittal letter for entry into the national stage in the U.S. under 35 U.S.C. 371, which was accompanied by, *inter alia*, the national basic fee, petition fee, and a petition under 37 CFR 1.137(b), and an executed declaration.

DISCUSSION

A grantable petition to revive an abandoned application under 37 CFR 1.137(b) must be accompanied by (1) the required reply, unless previously filed. In a nonprovisional application abandoned for failure to prosecute, the required reply may be met by the filing of a continuing application; (2) the petition fee as set forth in § 1.17(m); and (3) a statement that the entire delay in filing the required reply from the due date for the reply until the filing of a grantable petition pursuant to this paragraph was unintentional. The Commissioner may require additional information where there is a question whether the delay was unintentional; and (4) any terminal disclaimer (and fee as set forth in § 1.20 (d)) required pursuant to paragraph (c) of this section.

Petitioner has provided: (1) the proper reply by submitting the basic national filing fee, (2) the petition fee set forth in §1.17(m) and (3) the proper statement under 137(b)(3). In this application, no terminal disclaimer is required.

Accordingly, the petition is deemed to satisfy requirements (1), (2), (3), and (4) under 37 CFR 1.137(b).

DECISION

The petition under 37 CFR 1.137(b) is **GRANTED**.

This application is being returned to the United States Designated/Elected Office (DO/EO/US) for continued processing.

Rafael Bacares
PCT Legal Examiner
PCT Legal Office
Telephone: (571) 272-3276
Facsimile: (571) 273-0459

Stephany Shockley, Ph.D.

UNITED STATES PATENT AND TRADEMARK OFFICE

Commissioner for Patents
United States Patent and Trademark Office
P.O. Box 1450
Alexandria, VA 22313-1450
www.uspto.gov

MAILED

SEP 28 2011

PCT LEGAL ADMINISTRATION

GLOBAL IP SERVICES
7285 W. Eagle Court
Winton CA 95388

In re Application of :
MA, Jianyi :
Application No.: 13/145,010 :
PCT No.: PCT/CN2009/001262 :
Int. Filing Date: 16 November 2009 : DECISION
Priority Date: 20 November 2008 :
Att. Docket No.: HKZ-101US :
For: MOSQUITO REPELLENT SOLUTION, :
PREPARATION METHOD AND USE :
THEREOF :

Applicant's petition under 37 CFR 1.137(b), filed in the United States Patent and Trademark Office on 18 July 2011, is **GRANTED**.

Applicant states that the entire delay in filing the required reply from the due date for the required reply until the filing of a grantable petition under 37 CFR 1.137(b) was unintentional, as required by 37 CFR 1.137(b)(3). The appropriate national fee and petition fee have been submitted. A terminal disclaimer is not required as the application was filed on or after 08 June 1995. Accordingly, all requirements under 37 CFR 1.137(b) have been satisfied.

The fees for filing the search fee, examination fee or oath or declaration after thirty months and for filing the translation of the application after thirty months have not yet been furnished.

This application is being referred to the National Stage Processing Branch of the Office of Patent Application Processing for continued processing in accordance with this decision.

/Erin P. Thomson/

Erin P. Thomson
Attorney Advisor
PCT Legal Administration

Telephone: 571-272-3292

UNITED STATES PATENT AND TRADEMARK OFFICE

Commissioner for Patents
United States Patent and Trademark Office
P.O. Box 1450
Alexandria, VA 22313-1450
www.uspto.gov

MAILED

AUG 04 2011

PCT LEGAL ADMINISTRATION

FAY SHARPE/LUCENT
1228 Euclid Avenue, 5th Floor
The Halle Building
Cleveland OH 44115-1843

In re Application of
ZHU et al.
Application No.: 13/145,022
PCT No.: PCT/CN2008/073477
Int. Filing Date: 12 December 2008
Priority Date: None
Attorney Docket No.: LUTZ 201279US01
For: METHOD AND APPARATUS OF HANDOVER BETWEEN MOBILE TV NETWORKS

DECISION ON PETITION UNDER 37 CFR 1.137(b)

The petition to revive under 37 CFR 1.137(b) filed 18 July 2011 in the above-captioned application is hereby GRANTED as follows:

Applicant's statement that "the entire delay in filing the required reply from the due date for the reply until the filing of a grantable petition under 37 CFR 1.137(b) was unintentional" meets the requirements of 37 CFR 1.137(b)(3).

A review of the application file reveals that applicant has submitted the required reply and the requirements of 37 CFR 1.137(b) have been satisfied. Therefore, the request to revive the application abandoned under 35 U.S.C. 371(d) is granted as to the National stage in the United States of America.

This application is being returned to the United States Designated/Elected Office for processing in accordance with this decision.

Anthony Smith
Attorney-Advisor
Office of PCT Legal Administration
Tel: (571) 272-3298
Fax: (571) 273-0459

PTO/SB/20PCT-EP (05-10)
Approved for use through 01/31/2012. OMB 0651-0058
U.S. Patent and Trademark Office; U.S. DEPARTMENT OF COMMERCE

Under the Paperwork Reduction Act of 1995, no persons are required to respond to a collection of information unless it displays a valid OMB control number.

REQUEST FOR PARTICIPATION IN THE PATENT COOPERATION TREATY - PATENT PROSECUTION HIGHWAY (PCT-PPH) PILOT PROGRAM BETWEEN THE EUROPEAN PATENT OFFICE (EPO) AND THE USPTO

Application No.:	13/145,026	Filing Date:	July 18, 2011
First Named Inventor:	Arthur SCHWERZMANN		
Attorney Docket No.:	150177		
Title of the Invention:	DRIVE DEVICE FOR THE COVER OF A LIQUID CONTAINER		

THIS REQUEST FOR PARTICIPATION IN THE PCT-PPH PILOT PROGRAM ALONG WITH THE REQUIRED DOCUMENTS MUST BE SUBMITTED VIA EFS-WEB. INFORMATION REGARDING EFS-WEB IS AVAILABLE AT HTTP://WWW.USPTO.GOV/EBC/EFS_HELP.HTML.

APPLICANT HEREBY REQUESTS PARTICIPATION IN THE PCT-PPH PROGRAM AND PETITIONS TO MAKE THE ABOVE-IDENTIFIED APPLICATION SPECIAL UNDER THE PCT-PPH PROGRAM.

The above-identified application is (1) a national stage entry of the corresponding PCT application, or (2) a national stage entry of another PCT application which claims priority to the corresponding PCT application, or (3) a national application that claims domestic/ foreign priority to the corresponding PCT application, or (4) a national application which forms the basis for the priority claim in the corresponding PCT application, or (5) a continuing application of a U.S. application that satisfies one of (1) to (4) above, or (6) a U.S. application that claims domestic benefit to a U.S. provisional application which forms the basis for the priority claim in the corresponding PCT application.

The corresponding PCT application number(s) is/are: PCT/EP2010/063416

The international date of the corresponding PCT application(s) is/are: 09/13/2010

I. **List of Required Documents:**

a. **A copy of the latest international work product (WO/ISA, WO/IPEA, or IPER) in the above–identified corresponding PCT application(s)**

☒ Is attached.

☐ Is not attached because the document is already in the U.S. application.

b. **A copy of all claims which were indicated as having novelty, inventive step and industrial applicability in the above-identified corresponding PCT application(s).**

☒ Is attached.

☐ Is not attached because the document is already in the U.S. application.

c. **English translations of the documents in a. and b. above are attached (if the documents are not in the English language). A statement that the English translation is accurate is attached for the document in b. above.**

This collection of information is required by 35 U.S.C. 119, 37 CFR 1.55, and 37 CFR 1.102(d). The information is required to obtain or retain a benefit by the public, which is to file (and by the USPTO to process) an application. Confidentiality is governed by 35 U.S.C. 122 and 37 CFR 1.11 and 1.14. This collection is estimated to take 2 hours to complete, including gathering, preparing, and submitting the completed application form to the USPTO. Time will vary depending upon the individual case. Any comments on the amount of time you require to complete this form and/or suggestions for reducing this burden should be sent to the Chief Information Officer, U.S. Patent and Trademark Office, U.S. Department of Commerce, P.O. Box 1450, Alexandria, VA 22313-1450. DO NOT SEND FEES OR COMPLETED FORMS TO THIS ADDRESS.

Under the Paperwork Reduction Act of 1995, no persons are required to respond to a collection of information unless it displays a valid OMB control number.

REQUEST FOR PARTICIPATION IN THE PCT-PPH PILOT PROGRAM BETWEEN THE EPO AND THE USPTO

(continued)

Application No.:	13/145,026
First Named Inventor:	Arthur SCHWERZMANN

d. **(1) An information disclosure statement listing the documents cited in the international work products (ISR, WO/ISA, WO/IPEA, IPER) of the corresponding PCT application.**

☐ Is attached.

☒ Has already been filed in the above-identified U.S. application on July 18, 2011

(2) Copies of all documents (except) for U.S. patents or U.S. patent application publications)

☐ Are attached.

☒ Have already been filed in the above-identified U.S. application on July 18, 2011

II. Claims Correspondence Table:

Claims in US Application	Patentable Claims in the corresponding PCT Application	Explanation regarding the correspondence
1	1	Substantially Identical
2	2	Substantially Identical
3	3	Substantially Identical
4	4	Substantially Identical
5	5	Substantially Identical
6	6	Substantially Identical
7	7	Substantially Identical
8	8	Substantially Identical
9	9	Substantially Identical
10	10	Substantially Identical
11	11	Substantially Identical
12	12	Substantially Identical
13	13	Substantially Identical
14	14	Substantially Identical
15	15	Substantially Identical

III. All the claims in the US application sufficiently correspond to the patentable claims in the corresponding PCT application.

Signature	Date August 2, 2011
Name (Print/Typed) James A. Oliff	Registration Number 27,075
Name (Print/Typed) Justin T. Lingard	Registration Number 61,276

OLIFF & BERRIDGE, PLC
P.O. Box 320850
Alexandria, Virginia 22320-4850
Telephone: (703) 836-6400

DEPOSIT ACCOUNT USE AUTHORIZATION
Please grant any extension necessary for entry of this filing;
Charge any fee due to our Deposit Account No. 15-0461

Privacy Act Statement

The **Privacy Act of 1974 (P.L. 93-579)** requires that you be given certain information in connection with your submission of the attached form related to a patent application or patent. Accordingly, pursuant to the requirements of the Act, please be advised that: (1) the general authority for the collection of this information is 35 U.S.C. 2(b)(2); (2) furnishing of the information solicited is voluntary; and (3) the principal purpose for which the information is used by the U.S. Patent and Trademark Office is to process and/or examine your submission related to a patent application or patent. If you do not furnish the requested information, the U.S. Patent and Trademark Office may not be able to process and/or examine your submission, which may result in termination of proceedings or abandonment of the application or expiration of the patent.

The information provided by you in this form will be subject to the following routine uses:

1. The information on this form will be treated confidentially to the extent allowed under the Freedom of Information Act (5 U.S.C. 552) and the Privacy Act (5 U.S.C 552a). Records from this system of records may be disclosed to the Department of Justice to determine whether disclosure of these records is required by the Freedom of Information Act.
2. A record from this system of records may be disclosed, as a routine use, in the course of presenting evidence to a court, magistrate, or administrative tribunal, including disclosures to opposing counsel in the course of settlement negotiations.
3. A record in this system of records may be disclosed, as a routine use, to a Member of Congress submitting a request involving an individual, to whom the record pertains, when the individual has requested assistance from the Member with respect to the subject matter of the record.
4. A record in this system of records may be disclosed, as a routine use, to a contractor of the Agency having need for the information in order to perform a contract. Recipients of information shall be required to comply with the requirements of the Privacy Act of 1974, as amended, pursuant to 5 U.S.C. 552a(m).
5. A record related to an International Application filed under the Patent Cooperation Treaty in this system of records may be disclosed, as a routine use, to the International Bureau of the World Intellectual Property Organization, pursuant to the Patent Cooperation Treaty.
6. A record in this system of records may be disclosed, as a routine use, to another federal agency for purposes of National Security review (35 U.S.C. 181) and for review pursuant to the Atomic Energy Act (42 U.S.C. 218(c)).
7. A record from this system of records may be disclosed, as a routine use, to the Administrator, General Services, or his/her designee, during an inspection of records conducted by GSA as part of that agency's responsibility to recommend improvements in records management practices and programs, under authority of 44 U.S.C. 2904 and 2906. Such disclosure shall be made in accordance with the GSA regulations governing inspection of records for this purpose, and any other relevant (*i.e.*, GSA or Commerce) directive. Such disclosure shall not be used to make determinations about individuals.
8. A record from this system of records may be disclosed, as a routine use, to the public after either publication of the application pursuant to 35 U.S.C. 122(b) or issuance of a patent pursuant to 35 U.S.C. 151. Further, a record may be disclosed, subject to the limitations of 37 CFR 1.14, as a routine use, to the public if the record was filed in an application which became abandoned or in which the proceedings were terminated and which application is referenced by either a published application, an application open to public inspection or an issued patent.
9. A record from this system of records may be disclosed, as a routine use, to a Federal, State, or local law enforcement agency, if the USPTO becomes aware of a violation or potential violation of law or regulation.

VERTRAG ÜBER DIE INTERNATIONALE ZUSAMMENARBEIT AUF DEM GEBIET DES PATENTWESENS

Absender: INTERNATIONALE RECHERCHENBEHÖRDE

An:

siehe Formular PCT/ISA/220

PCT

SCHRIFTLICHER BESCHEID DER INTERNATIONALEN RECHERCHENBEHÖRDE

(Regel 43*bis*.1 PCT)

Absendedatum
(Tag/Monat/Jahr) siehe Formular PCT/ISA/210 (Blatt 2)

Aktenzeichen des Anmelders oder Anwalts
siehe Formular PCT/ISA/220

WEITERES VORGEHEN
siehe Punkt 2 unten

Internationales Aktenzeichen	Internationales Anmeldedatum *(Tag/Monat/Jahr)*	Prioritätsdatum *(Tag/Monat/Jahr)*
PCT/EP2010/063416	13.09.2010	18.09.2009

Internationale Patentklassifikation (IPC) oder nationale Klassifikation und IPC
INV. E04H4/08

Anmelder
SCHWERZMANN, Arthur

1. Dieser Bescheid enthält Angaben zu folgenden Punkten:

☒ Feld Nr. I Grundlage des Bescheids
☐ Feld Nr. II Priorität
☐ Feld Nr. III Keine Erstellung eines Gutachtens über Neuheit, erfinderische Tätigkeit und gewerbliche Anwendbarkeit
☐ Feld Nr. IV Mangelnde Einheitlichkeit der Erfindung
☒ Feld Nr. V Begründete Feststellung nach Regel 43*bis*.1 a) i) hinsichtlich der Neuheit, der erfinderischen Tätigkeit und der gewerblichen Anwendbarkeit; Unterlagen und Erklärungen zur Stützung dieser Feststellung
☐ Feld Nr. VI Bestimmte angeführte Unterlagen
☒ Feld Nr. VII Bestimmte Mängel der internationalen Anmeldung
☒ Feld Nr. VIII Bestimmte Bemerkungen zur internationalen Anmeldung

2. **WEITERES VORGEHEN**

Wird ein Antrag auf internationale vorläufige Prüfung gestellt, so gilt dieser Bescheid als schriftlicher Bescheid der mit der internationalen vorläufigen Prüfung beauftragten Behörde ("IPEA"); dies trifft nicht zu, wenn der Anmelder eine andere Behörde als diese als IPEA wählt und die gewählte IPEA dem Internationale Büro nach Regel 66.1*bis* b) mitgeteilt hat, dass schriftliche Bescheide dieser Internationalen Recherchenbehörde nicht anerkannt werden.

Wenn dieser Bescheid wie oben vorgesehen als schriftlicher Bescheid der IPEA gilt, so ist der Anmelder aufgefordert, bei der IPEA vor Ablauf von 3 Monaten ab dem Tag, an dem das Formblatt PCT/ISA/220 abgesandt wurde oder vor Ablauf von 22 Monaten ab dem Prioritätsdatum, je nachdem, welche Frist später abläuft, eine schriftliche Stellungnahme und, wo dies angebracht ist, Änderungen einzureichen.

Weitere Optionen siehe Formblatt PCT/ISA/220.

3. Nähere Einzelheiten siehe die Anmerkungen zu Formblatt PCT/ISA/220.

Name und Postanschrift der Internationalen Recherchenbehörde	Datum der Fertigstellung dieses Bescheids	Bevollmächtigter Bediensteter
Europäisches Patentamt D-80298 München Tel. +49 89 2399 - 0 Fax: +49 89 2399 - 4465	siehe Formular PCT/ISA/210	Decker, Robert Tel. +49 89 2399-8403

SCHRIFTLICHER BESCHEID DER INTERNATIONALEN RECHERCHEBEHÖRDE

Internationales Aktenzeichen
PCT/EP2010/063416

Feld Nr. I Grundlage des Bescheids

1. Hinsichtlich der **Sprache** beruht der Bescheid auf

   ☒ der internationalen Anmeldung in der Sprache, in der sie eingereicht wurde

   ☐ einer Übersetzung der internationalen Anmeldung in die folgende Sprache , bei der es sich um die Sprache der Übersetzung handelt, die für die Zwecke der internationalen Recherche eingereicht worden ist (Regeln 12.3 a) und 23.1 b)).

2. ☐ Dieser Bescheid wurde erstellt unter Berücksichtigung der **Berichtigung eines offensichtlichen Fehlers**, die nach Regel 91 von dieser Behörde genehmigt wurde bzw. dieser Behörde mitgeteilt wurde (Regel 43bis.1 a)).

3. Hinsichtlich der **Nucleotid- und/oder Aminosäuresequenz**, die in der internationalen Anmeldung offenbart wurde, ist der Bescheid auf der Grundlage eines Sequenzprotokolls erstellt worden, das

   a. (Form)

   ☐ in Papierform

   ☐ in elektronischer Form

   b. (Zeitpunkt)

   ☐ in der eingereichten internationalen Anmeldung

   ☐ zusammen mit der internationalen Anmeldung in elektronischer Form

   ☐ bei der Behörde nachträglich für die Zwecke der Recherche

4. ☐ Wurden mehr als eine Version oder Kopie eines Sequenzprotokolls eingereicht, so sind zusätzlich die erforderlichen Erklärungen, dass die Information in den nachgereichten oder zusätzlichen Kopien mit der Information in der Anmeldung in der eingereichten Fassung übereinstimmt bzw. nicht über sie hinausgeht, vorgelegt worden.

5. Zusätzliche Bemerkungen:

Feld Nr. V Begründete Feststellung nach Regel 43*bis*.1 a) i) hinsichtlich der Neuheit, der erfinderischen Tätigkeit und der gewerblichen Anwendbarkeit; Unterlagen und Erklärungen zur Stützung dieser Feststellung

1. Feststellung

Neuheit	Ja:	Ansprüche 1-15
	Nein:	Ansprüche
Erfinderische Tätigkeit	Ja:	Ansprüche 1-15
	Nein:	Ansprüche
Gewerbliche Anwendbarkeit	Ja:	Ansprüche: 1-15
	Nein:	Ansprüche:

2. Unterlagen und Erklärungen:

siehe Beiblatt

Feld Nr. VII Bestimmte Mängel der internationalen Anmeldung

Es wurde festgestellt, dass die internationale Anmeldung nach Form oder Inhalt folgende Mängel aufweist:

siehe Beiblatt

Feld Nr. VIII Bestimmte Bemerkungen zur internationalen Anmeldung

Zur Klarheit der Patentansprüche, der Beschreibung und der Zeichnungen oder zu der Frage, ob die Ansprüche in vollem Umfang durch die Beschreibung gestützt werden, ist folgendes zu bemerken:

siehe Beiblatt

Es wird auf die folgenden Dokumente verwiesen:

D1 FR 2 577 264 A1 (SWIMART [FR]) 14. August 1986 (1986-08-14)

D2 DE 28 54 738 A1 (HOMA SCHWIMMBADZUBEHOER) 3. Juli 1980 (1980-07-03)

D3 DE 23 58 755 A1 (HERRMANN GUENTHER) 5. Juni 1975 (1975-06-05)

D4 FR 2 607 173 A1 (LAMBERT FRANCOIS [FR]) 27. Mai 1988 (1988-05-27)

Zu Punkt V

Begründete Feststellung hinsichtlich der Neuheit, der erfinderischen Tätigkeit und der gewerblichen Anwendbarkeit; Unterlagen und Erklärungen zur Stützung dieser Feststellung

1 Erfinderische Tätigkeit, Artikel 33(3) PCT

Die vorliegende Anmeldung erfüllt die Erfordernisse des Artikels 33(1) PCT, weil der Gegenstand der Ansprüche **1-15** auf einer erfinderischen Tätigkeit im Sinne von Artikel 33(3) beruht.

1.1 Unabhängiger Anspruch **1**:

Das Dokument **D1** wird als nächstliegender Stand der Technik gegenüber dem Gegenstand des Anspruchs **1** angesehen. Es offenbart (die Verweise in Klammern beziehen sich auf dieses Dokument):

a. Eine Antriebsvorrichtung für eine flexible Abdeckung 1 eines Flüssigkeitsbehälters, insbesondere eines Schwimmbeckens, die in einem getrennt vom Flüssigkeitsbehälter angeordneten Vorrichtungsraum 4 installiert oder installierbar ist (siehe Beschreibung Seite 1, Zeilen 1-6 und die Abbildung 1),

b. beinhaltend eine Abdeckung 1 welche über den Flüssigkeitsbehälter bewegt und von diesem wieder abgezogen werden kann, mit einer mit der Abdeckung 1 zusammenwirkenden Wickelwelle 3, die mit einer ersten Antriebseinheit gekoppelt ist (siehe die Beschreibung Seite 2, Zeilen 28-29),

c. wobei die Wickelwelle 3 dem Aufwickeln der Abdeckung 1 dient, welche über eine Umlenkvorrichtung 14 zu einer Austrittsöffnung 5 des Vorrichtungsraumes 4 führbar (siehe Abbildung 1 und Beschreibung Seite 1, Zeilen 11-12)

d. und an dem der Wickelwelle 3 zugewandten Ende mit wenigstens einem äußeren Zugelement 7 gekoppelt ist, welches von einer ersten Zugvorrichtung 9 gehalten und von dieser spannbar ist (siehe die Beschreibung Seite 1, Zeilen 9-15 und die Abbildung 1).

Der Gegenstand des Anspruchs **1 unterscheidet sich** daher von der bekannten Antriebsvorrichtung aus **D1** dadurch, dass das äußere Zugelement an der der Umlenkvorrichtung abgewandten Seite der Abdeckung anliegt und diese unter Spannung gegen die Umlenkvorrichtung andrückt.

Das Einspannen der Abdeckung zwischen der Umlenkvorrichtung und der Zugvorrichtung erlaubt es, die Abdeckung schlupffrei und sicher Ein- und Ausrollen zu können.

Die mit der vorliegenden Erfindung zu lösende **Aufgabe** kann somit darin gesehen werden, die oben genannte Wirkung zu erzielen.

Die in Anspruch **1** der vorliegenden Anmeldung für diese Aufgabe vorgeschlagene Lösung beruht aus den folgenden Gründen auf einer erfinderischen Tätigkeit (Artikel 33 (3) PCT):

Dokument **D2** offenbart eine Abwickelvorrichtung für eine flexible Abdeckung eines Flüssigkeitsbehälters (siehe **D2**, insbesondere Abbildung 4), bei der die Abdeckung sicher und schlupffrei zwischen Zugbänder 39 und einer Umlenkvorrichtung 27 geführt wird (siehe **D2**, Seite 9, Zeile 25 bis Seite 10, Zeile 6), d.h. die gestellte Aufgabe geht in diesem Dokument auf. Der Fachmann würde jedoch dieses Dokument zur Lösung der Aufgabe nicht berücksichtigen, da das Zugelement 39 nicht, wie beansprucht - mit dem Ende der Abdeckung gekoppelt ist (und auf die Antriebswelle aufgerollt wird), sondern eine Reibung auf die Abdeckung erzeugend außen an der Wickelwelle mit der aufgewickelten Abdeckung anliegt. Die Kombination von **D1** von **D2** zur Lösung der gestellten Aufgabe würde somit von der beanspruchten Merkmalskombination in Anspruch **1** wegführen. Darüber hinaus offenbart **D2** eine alternative Antriebsvorrichtung für eine Abdeckung eines Schwimmbeckens welche eine **Abgrenzung zu den bekannten Antriebsvorrichtungen darstellt** (bei denen ein oder mehrere Bänder auf die Wickelwelle aufrollbar sind - siehe **D2**, Seite 3, dritter Absatz).

Die Dokumente **D3** und auch **D4** offenbaren (siehe **D3**, Abbildung 3 und **D4**, Abbildungen 1 und 2) beide Antriebsvorrichtungen für flexible Abdeckungen von Schwimmbecken mit den gleichen Merkmalen wie in **D1**, jedoch ohne dass Merkmal dass das äußere Zugelement an der der Umlenkvorrichtung abgewandten Seite der Abdeckung anliegt und diese unter Spannung gegen

die Umlenkvorrichtung andrückt. Somit geht auch aus diesen Dokumenten die oben beschriebene Aufgabenstellung weder allein, noch in Kombination mit **D1** oder **D2**, auf.

Somit ist der Gegenstand des Anspruchs **1** neu im Sinne des Artikels 33(2) PCT und beruht auf einer erfinderischen Tätigkeit im Sinne des Artikels 33(3) PCT.

1.2 Die Ansprüche **2-15** beschreiben Weiterbildungen der in Anspruch **1** definierten Antriebsvorrichtung und sind somit auch neu und erfinderisch nach Artikel 33(1) PCT.

Zu Punkt VII

Bestimmte Mängel der internationalen Anmeldung

2 In der Beschreibung sollten die Dokumente **D1-D4** genannt werden; der darin enthaltene einschlägige Stand der Technik sollte kurz umrissen werden.

3 Die zweiteilige Form des unabhängigen Anspruchs **1** sollte richtig gestellt werden; diejenigen Merkmale, die in Verbindung miteinander zum Stand der Technik gehören (siehe Dokument **D1**), sind in den Oberbegriff aufzunehmen.

4 Die Beschreibung sollte an die einzureichenden Ansprüche angepasst werden. Bei der Überarbeitung der Anmeldung, insbesondere des einleitenden Teils einschließlich der Darstellung der Aufgabe oder der Vorteile der Erfindung, sollte darauf geachtet werden, dass kein Sachverhalt hinzugefügt wird, der über den Inhalt der Anmeldung in der ursprünglich eingereichten Fassung hinausgeht.

5 Es sollte in der Beschreibung dargestellt werden, inwiefern die Erfindung als Lösung einer technischen Aufgabe gegenüber dem bekannten Stand der Technik anzusehen ist.

Zu Punkt VIII

Bestimmte Bemerkungen zur internationalen Anmeldung

6 Die Anmeldung erfüllt nicht die Erfordernisse des Artikels 6 PCT, weil die Ansprüche **1**, **5**, **7** und **8** nicht ausreichend klar sind:

- Im Wortlaut des Anspruchs **1** ist nicht klar ob die Abdeckung Bestandteil der beanspruchten Antriebsvorrichtung sind, da der Anspruch lediglich die Wirkung der Bauteile mit der Abdeckung beschreibt, ohne klarzustellen ob diese Teil der Antriebsvorrichtung ist oder nicht - siehe zum Beispiel die Formulierungen: "*für eine flexible Abdeckung*", "*dem Aufwickeln*

der Abdeckung dient", "*die (Abdeckung) über eine Umlenkvorrichtung zu einer Austrittsöffnung des Vorrichtungsraumes führbar und ... gekoppelt ist*";

Anmerkung: Um diesen Einwand auszuräumen sollte der Anspruch so umformuliert werden, dass klar wird, dass die Abdeckung Teil der beanspruchten Antriebsvorrichtung ist, beispielsweise in der folgenden Form:

Antriebsvorrichtung (1) für eine flexible Abdeckung (10) eines Flüssigkeitsbehälters (2), insbesondere eines Schwimmbeckens, die in einem getrennt vom Flüssigkeitsbehälter (2) angeordneten Vorrichtungsraum (3) installiert oder installierbar ist, beinhaltend eine Abdeckung (10) welche über den Flüssigkeitsbehälter (2) bewegt und von diesem wieder abgezogen werden kann, mit einer mit der Abdeckung (10) zusammenwirkenden Wickelwelle (11), die mit einer ersten Antriebseinheit (110) gekoppelt ist, dadurch gekennzeichnet, dass die Wickelwelle (11) dem Aufwickeln der Abdeckung (10) dient, welche über eine Umlenkvorrichtung (14) zu einer Austrittsöffnung (35) des Vorrichtungsraumes (3) führbar und an dem der Wickelwelle (11) zugewandten Ende mit wenigstens einem äusseren Zugelement (12) gekoppelt ist, das an der der Umlenkvorrichtung (14) abgewandten Seite der Abdeckung (10) anliegt, und diese unter Spannung gegen die Umlenkvorrichtung (14) andrückt, und das von einer ersten Zugvorrichtung (120) gehalten und von dieser spannbar ist.

- Anspruch **5** ist nicht klar, da er sich auf eine zweite Zugvorrichtung bezieht, welche erst in Anspruch 4 definiert worden ist, der Rückbezug des Anspruchs **5** jedoch auf die Ansprüche 1-4 geht.
- Anspruch **7** ist nicht klar, da er sich auf eine zweite Zugvorrichtung und auf ein inneres Zugelement bezieht, welche erst in Anspruch **4** definiert worden sind, der Rückbezug des Anspruchs **7** jedoch auf die Ansprüche **1-6** geht. Dieser Einwand betrifft sinngemäß auch Anspruch **8**.

Patentansprüche

1. Antriebsvorrichtung (1) für eine flexible Abdeckung (10) eines Flüssigkeitsbehälters (2), insbesondere eines Schwimmbeckens, die in einem getrennt vom Flüssigkeitsbehälter (2) angeordneten Vorrichtungsraum (3) installiert oder installierbar ist und mittels der die Abdeckung (10) über den Flüssigkeitsbehälter (2) bewegt und von diesem wieder abgezogen werden kann, mit einer mit der Abdeckung (10) zusammenwirkenden Wickelwelle (11), die mit einer ersten Antriebseinheit (110) gekoppelt ist, **dadurch gekennzeichnet**, dass die Wickelwelle (11) dem Aufwickeln der Abdeckung (10) dient, die über eine Umlenkvorrichtung (14) zu einer Austrittsöffnung (35) des Vorrichtungsraumes (3) führbar und an dem der Wickelwelle (11) zugewandten Ende mit wenigstens einem äusseren Zugelement (12) gekoppelt ist, das an der der Umlenkvorrichtung (14) abgewandten Seite der Abdeckung (10) anliegt, und diese unter Spannung gegen die Umlenkvorrichtung (14) andrückt, und das von einer ersten Zugvorrichtung (120) gehalten und von dieser spannbar ist.

2. Antriebsvorrichtung (1) nach Anspruch 1, **dadurch gekennzeichnet**, dass die Umlenkvorrichtung (14) einen vorzugsweise drehbar gelagerten, vorzugsweise kurvenförmigen Tragkörper (140) aufweist, an dem eine oder mehrere Umlenkrollen (14A, 14B, 14C, …) vorgesehen sind.

3. Antriebsvorrichtung (1) nach Anspruch 1 oder 2, **dadurch gekennzeichnet**, dass die Umlenkvorrichtung (14) derart ausgestaltet und angeordnet ist, dass die Abdeckung (10) über eine gekrümmte Bahn zur Austrittsöffnung (35) des Vorrichtungsraums (3) verläuft.

4. Antriebsvorrichtung (1) nach Anspruch 1, 2 oder 3, **dadurch gekennzeichnet**, dass auf der dem äusseren Zugelement (12) gegenüberliegenden Seite der Abdeckung (10) wenigstens ein mit der Wickelwelle (11) gekoppeltes inneres Zugelement (13) vorgesehen ist, das von einer zweiten Zugvorrichtung (130) gehalten und von dieser spannbar ist.

5. Antriebsvorrichtung (1) nach einem der Ansprüche 1-4, **dadurch gekennzeichnet**, dass die erste Zugvorrichtung (120) wenigstens eine von der ersten oder einer zweiten Antriebseinheit (110, 121) angetriebene und mit einer Spule (122) versehene erste Spulenwelle (1210) umfasst, welche dem Aufwickeln des äusseren Zugelements (12) dient und/oder dass die zweite Zugvorrichtung (130) wenigstens eine von der ersten, der zweiten oder einer dritten Antriebseinheit (110; 121; 131) angetriebene mit einer Spule (132) versehene zweite Spulenwelle umfasst, welche dem Aufwickeln des inneren Zugelements (13) dient.

6. Antriebsvorrichtung (1) nach einem der Ansprüche 1-5, **dadurch gekennzeichnet**, dass das äussere und, sofern vorhanden, das innere Zugelement (12, 13) mit der Wickelwelle (11) oder mit dem der Wickelwelle (11) zugewandten Ende der Abdeckung (10) verbunden sind.

7. Antriebsvorrichtung (1) nach einem der Ansprüche 1-6, **dadurch gekennzeichnet**, dass das äussere Zugelement (12) über eine obere Austrittsrolle (125) zur ersten Zugvorrichtung (120) geführt ist und/oder dass das innere Zugelement (13) über eine untere Austrittsrolle (135) zur zweiten Zugvorrichtung (130) geführt ist, wobei die obere Austrittsrolle (125) und/oder die untere Austrittsrolle (135) bei der Austrittsöffnung (35) des Vorrichtungsraumes (3) angeordnet sind, durch

die die Abdeckung (10) hin zum Flüssigkeitsbehälter (2) ausgestossen wird.

8. Antriebsvorrichtung (1) nach einem der Ansprüche 1-7, **dadurch gekennzeichnet**, dass das äussere und/oder das innere Zugelement (12, 13) aus Kunststoff, textilem Material oder Metall gefertigt ist und als Seil oder Band mit einer Breite vorzugsweise im Bereich von 1cm bis 20cm ausgebildet ist.

9. Antriebsvorrichtung (1) nach einem der Ansprüche 1-8, **dadurch gekennzeichnet**, dass die Abdeckung (10) aus flexibel miteinander verbundenen und quer zur Transportrichtung verlaufenden isolierenden Profilelementen (100) besteht, welche schwimmfähig sind und/oder mittels einer Führungsvorrichtung entlang dem Rand des Flüssigkeitsbehälters (2) geführt sind.

10. Antriebsvorrichtung (1) nach einem der Ansprüche 5-9 **dadurch gekennzeichnet**, dass die Wickelwelle (11) über eine erste Kopplungsvorrichtung (155, 156, 157) starr mit der ersten Antriebseinheit (110) gekoppelt ist und dass die wenigstens eine Spulenwelle (1210) mit einer zweiten Antriebseinheit (120) oder über eine zweite Kopplungsvorrichtung (152), die eine Ausgleichsvorrichtung (1511, 1512) aufweist, mit der ersten Antriebseinheit (110) gekoppelt ist.

11. Antriebsvorrichtung (1) nach Anspruch 10, **dadurch gekennzeichnet**, dass die Spulenwelle (1210) auf einer Seite von der ersten Kopplungsvorrichtung (151) und auf der anderen Seite von einer zweiten Kopplungsvorrichtung (152) gehalten ist, welche je einen Freilauf (1511 bzw. 1521) aufweisen, die je eine Rutschnabe (1512 bzw. 1522) halten und in eine erste und eine zweite Drehrichtung, die Einnahmen

entgegengesetzt sind, blockieren, wobei die Rutschnabe (1512 bzw. 1522) bei Auftreten eines genügend hohen Drehmoments die Spulenwelle (1210) frei gibt.

12. Antriebsvorrichtung (1) nach Anspruch 10 oder 11, **dadurch gekennzeichnet**, dass die erste Antriebseinheit (110) in die Wickelwelle (11) integriert ist.

13. Antriebsvorrichtung (1) nach Anspruch 10, 11 oder 12, **dadurch gekennzeichnet**, dass die Wickelwelle (11) von der ersten Antriebseinheit (110) in beide Richtungen antreibbar ist.

14. Antriebsvorrichtung (1) nach einem der Ansprüche 1 - 13, **dadurch gekennzeichnet**, dass auf der Oberseite und/oder der Unterseite der Abdeckung (10) eine Reinigungsvorrichtung (9) vorgesehen ist, welche eine vorzugsweise von einem Motor (92) angetriebene Bürste (91) aufweist die an der betreffenden Seite der Abdeckung (10) anliegt.

15. Antriebsvorrichtung (1) nach einem der Ansprüche 1-14 **dadurch gekennzeichnet**, dass die erste Antriebseinheit (110) und die vorgesehenen Zugvorrichtungen (120, 130) mittels einer Steuereinheit (1100) in Abhängigkeit von Signalen und Daten steuerbar sind, welche von Sensoren (1101, 1102, 1103) abgenommen oder vom Anwender in der Steuereinheit (1100) abgelegt sind.

VERIFIED TRANSLATION OF WRITTEN OPINION OF THE INTERNATIONAL SEARCHING AUTHORITY
relating to International application No. PCT/EP2010/063416

PATENT COOPERATION TREATY

From the
INTERNATIONAL SEARCHING AUTHORITY

To:

see form PCT/SA/220

PCT

WRITTEN OPINION OF THE
INTERNATIONAL SEARCHING AUTHORITY

(PCT Rule 43*bis*.1)

Date of mailing *(day/month/year)*	see form PCT/SA/220
Applicant's or agent's file reference	**FOR FURTHER ACTION** See paragraph 2 below

International application No.	International filing date *(day/month/year)*	Priority date *(day/month/year)*
PCT/EP2010/063416	13.09.2010	18.09 .2009

International Patent Classification (IPC) or both national classification and IPC
INV. E04H4/08

Applicant
SCHWERZMANN, Arthur

1. This opinion contains indications relating to the following items:

- [X] Box No. I Basis of the opinion
- [ ] Box No. II Priority
- [ ] Box No. III Non-establishment of opinion with regard to novelty, inventive step and industrial applicability
- [ ] Box No. IV Lack of unity of invention
- [X] Box No. V Reasoned statement under Rule 43*bis*.1(a)(i) with regard to novelty, inventive step and industrial applicability; citations and explanations supporting such statement
- [ ] Box No. VI Certain documents cited
- [X] Box No. VII Certain defects in the international application
- [X] Box No. VIII Certain observations on the international application

2. **FURTHER ACTION**

If a demand for international preliminary examination is made, this opinion will be considered to be a written opinion of the International Preliminary Examining Authority ("IPEA") except that this does not apply where the applicant chooses an Authority other than this one to be the IPEA and the chosen IPEA has notified the International Bureau under Rule 66.1*bis*(b) that written opinions of this International Searching Authority will not be so considered.

If this opinion is, as provided above, considered to be a written opinion of the IPEA, the applicant is invited to submit to the IPEA a written reply together, where appropriate, with amendments, before the expiration of 3 months from the date of mailing of Form PCT/ISA/220 or before the expiration of 22 months from the priority date, whichever expires later.

For further options, see Form PCT/ISA/220.

Name and mailing address of the ISA/	Date of completion of this opinion	Authorized officer
Europäisches Patentamt D-80298 München Tel +49 89 2399- 0 Facsimile No. +49 89 2399-4465	see form PCT/SA/210	Decker, Robert Tel. +49 89 2399-8403 Telephone No.

WRITTEN OPINION OF THE INTERNATIONAL SEARCHING AUTHORITY

International application No.
PCT/EP2010/063416

Box No. I Basis of this opinion

1. With regard to the **language**, this opinion has been established on the basis of:

   [X] the international application in the language in which it was filed.

   [ ] a translation of the international application into _____ which is the language of a translation furnished for the purposes of international search (Rules 12.3(a) and 23.1(b)).

2. [ ] This opinion has been established taking into account the **rectification of an obvious mistake** authorized by or notified to this Authority under Rule 91 (Rule 43*bis*.1(a))

3. With regard to any **nucleotide and/or amino acid sequence** disclosed in the international application, this opinion has been established on the basis of a sequence listing filed or furnished:

   a. (means)

   [ ] on paper

   [ ] in electronic form

   b. (time)

   [ ] in the international application as filed

   [ ] together with the international application in electronic form

   [ ] subsequently to this Authority for the purposes of search

4. [ ] In addition, in the case that more than one version or copy of a sequence listing has been filed or furnished, the required statements that the information in the subsequent or additional copies is identical to that in the application as filed or does not go beyond the application as filed, as appropriate, were furnished.

5. Additional comments:

WRITTEN OPINION OF THE INTERNATIONAL SEARCHING AUTHORITY

International application No.
PCT/EP2010/063416

Box No. V **Reasoned statement under Rule 43*bis*.1(a)(i) with regard to novelty, inventive step and industrial applicability; citations and explanations supporting such statement**

1. Statement

Novelty (N)	Claims	1 - 15	YES
	Claims		NO
Inventive step (IS)	Claims	1 - 15	YES
	Claims		NO
Industrial applicability (IA)	Claims	1 - 15	YES
	Claims		NO

2. Citations and explanations:

see separate sheet

Re item No. VII Specific deficiencies of the International Application

It has been found that the International Application according to form or content comprises the following deficiencies:

see separate sheet

Re item No. VIII Specific remarks to the International Application

To the clarity of the claims, the description and the drawings or to the question, whether the Claims are fully supported by the description, the following is to be stated:

see separate sheet

WRITTEN OPINION OF THE INTERNATIONAL SEARCHING AUTHORITY
International application No. PCT/EP2010/063416

It is referred to the following documents:

D1 FR 2 577 264 A1 (SWIMART [FR]) 14. August 1986 (1986-08-14)
D2 DE 28 54 738 A1 (HOMA SCHWIMMBADZUBEHOER) 3. July 1980 (1980-07 -03)
D3 DE 23 58 755 A1 (HERRMANN GUENTHER) 5. June 1975 (1975-06-05)
D4 FR 2 607173 A1 (LAMBERT FRANCOIS [FR]) 27. May 1988 (1988-05-27)

Re item V

Reasoned statement concerning Novelty, Inventive step and Industrial Applicability; documents and explanations in support of this statement

1. <u>Inventive step</u>, Article 33(3) PCT

The present application meets the requirements of Article 33(1) PCT, because the subject matter of claims 1-15 is based on an inventive step in the sense of article Article 33(3) PCT.

1.1 <u>Independent claim 1</u>:

Document D1 is considered closest prior art in view of the subject matter of claim 1.
It discloses (the references in brackets relate to this document):

a. a drive device for a flexible cover 1 of a liquid container, particularly a swimming pool, which drive device is installed or installable in a device compartment 4 that is arranged separate from the liquid container (see description, page 1, lines 1-6 and figure 1),

b. comprising a cover 1 that can be moved over the and can again be retracted from the liquid container, with a winding shaft 3 that is interacting with the cover 1 and that is coupled to a first drive unit (see description, page 2, lines 28-29),

c. wherein the winding shaft 3 serves for rolling-up the cover 1 that is guided over a deflection device 14 to an outlet opening 5 of the device compartment 4 (see figure 1 and description, page 2, lines 28-29),

d. and, at the end facing the winding shaft 3, is connected to at least one an outer tractive element 7, which is held and can be tensioned by a first traction device 9 (see description, page 1, lines 9-15 and figure 1).

Hence, subject matter of claim 1 **differs from** the known drive device of D1 in that the outer traction element lies at the side of the cover that is opposite to the side which faces the deflection device and presses the cover under tension against the deflection device.

The clamping of the cover between the deflection device and the traction device allows, to roll-up and unroll the cover safely and without slack.

The **problem** to be solved with the present invention may therefore be regarded as to obtain the above mentioned effect.

The solution proposed in claim 1 of the present application is based on an inventive step for the following reasons (Article 33(3) PCT):

Document D2 discloses an unrolling device for a flexible cover of a liquid container (see D2, particularly figure 4), with which the cover is guided safely and without slack between traction ribbons 39 and a deflection device 27 (see D2, page 9, line 25 to page 20, line 6), i.e., the given object is resolved with this document. however, the man skilled in the arts would not consider this document for solving the problem, since the traction element 39 is not, as claimed -coupled with the end of the cover (and is rolled up onto the winding shaft), but lies from the outside at the winding shaft with the wound cover, thus creating a friction on the cover. The combination of D1 and D2 for solving the given problem would therefore lead away from the combination of features claimed in claim 1.

Moreover D2 discloses an alternative drive device for the cover of a swimming pool, which exhibits a differentiation to the known drive devices (with which one or more ribbons can be rolled up on the winding shaft – see D2, page 3, third paragraph).

Documents D3 and also D4 (see D3, figure 3 and D4, figures 1 and 2) disclose both drive devices for flexible covers of swimming pools with the same features as in D1, but without the feature, that the outer traction element is lying at the side of the cover that is opposite to the deflection device and is pressing the cover under tension against the deflection device. For this reason the above defined problem is not resolved, neither individually, nor in combination with D1, or D2.

Therefore, subject matter of claim 1 is new in the sense of Article 33(2) PCT and is based on an inventive step in the sense of Article 33(3) PCT.

1.2 Claims 2-15 described further embodiments of the drive device defined in claim 1 and are therefore new and based on inventive step according to Article 33(1) PCT.

Re item No. VII
Specific deficiencies of the International Application

2 In the description the documents D1-D4 shall be mentioned; the prior art contained therein shall briefly be defined.

3 The two-part form of the independent claim 1 shall be corrected; those features that in combination with one another relate to prior art (see document D1), shall be defined in the preamble.

4 The description shall be adapted to the claims that shall be filed. When amending the application, particularly of the introductory section including the definition of the problem or the advantages of the invention, care shall be taken, that no matter is added that exceeds the content of the application in the originally filed version.

5 It would be defined in the description, to what extent the invention can be regarded as a solution of a technical problem compared to the known prior art.

Re item No. VIII
Specific remarks to the International Application

6 The application does not meet the requirements of Article 6 PCT, since the claims 1, 5, 7 and 8 are not sufficiently clear:

in the wording of claim 1 is not clear, whether the cover is part of the claims drive device, since the claim merely describes the effect of the components with the cover, without clarifying whether this is part of the drive device or not - see for example the following wordings: *"for a flexible cover"*, *"serving for up-rolling the cover"*, *"the (cover) is guidable ... coupled via a deflection device to the outlet opening of the device compartment"*,

Remark: in order to meet this objection, to claim should be drafted in such a way that it is clear, that the cover is part of the claims drive device, for example in the following form:

Drive device (1) for a flexible cover (10) of a liquid container (2), particularly a swimming pool, which drive device (1) is installed or installable in a device compartment (3) that is arranged separate from the liquid container (2), comprising a cover (10) that can be moved over the and can again be retracted from the liquid container (2), with a winding shaft (11) that is interacting with the cover (10) and that is coupled to a first drive unit (110), wherein the winding shaft (11) serves for rolling-up the cover (10), that is guided over a deflection device (14) to an outlet opening (35) of the device compartment (3) and, at the end facing the winding shaft (11), is connected to at least one outer tractive element (12), which is acting against the side of the cover (10) that is opposite to the side which faces the deflection device (14), which outer tractive element (12) presses the cover (10) under tension against the deflection device (14), and which outer tractive element (12) is held and can be tensioned by a first traction device (120).

Claim 5 is not clear, since it refers to a second traction device, which is defined only in claim 4, the reference of claim 5 however is relating to the claims 1- 4.

Claim 7 is not clear, since it refers to a second traction device and an inner traction element, which is only defined in claim 4, the reference of claim 7 however is relating to the claims 1-6. this objection is valid analogously for claim 8.

Claims

1. Drive device (1) for a flexible cover (10) of a liquid container (2), particularly a swimming pool, which drive device (1) is installed or installable in a device compartment (3) that is arranged separate from the liquid container (2) and with which the cover (10) can be moved over the and can again be retracted from the liquid container (2), with a winding shaft (11) that is interacting with the cover (10) and that is coupled to a first drive unit (110), **wherein** the winding shaft (11) serves for rolling-up the cover (10), that is guided over a deflection device (14) to an outlet opening (35) of the device compartment (3) and, at the end facing the winding shaft (11), is connected to an outer tractive element (12), which is acting against the side of the cover (10) that is opposite to the side which faces the deflection device (14), which outer tractive element (12) presses the cover (10) under tension against the deflection device (14), and which outer tractive element (12) is held and can be tensioned by a first traction device (120).

2. Drive device (1) according to claim 1, **wherein** the deflection device (14) comprises a holding body (140), which preferably is rotatably supported and preferably is curve shaped, and which is provided with one or more deflection pulleys (14A, 14B, 14C, …).

3. Drive device (1) according to claim 1 or 2, **wherein** the deflection device (14) is designed in such a way, that the cover (10) runs over a bent path to the outlet opening (35) of the device compartment (3).

4. Drive device (1) according to claim 1, 2 or 3, **wherein**, on the side of the cover (10) facing away from the

outer tractive element (12) at least one inner tractive element (13) is provided that is coupled to the winding shaft (11) and that is held and can be tensioned by a second traction device (130).

5. Drive device (1) according to one of the claims 1-4, **wherein** the first traction device (120) comprises at least one first reel shaft (1210) that is driven by the first or a second drive unit (110, 121) and that is provided with a reel (122), which serves for rolling-up the outer tractive element (12) and/or wherein the second traction device (130) comprises at least one second reel shaft that is driven by the second or a third drive unit (110; 121; 131) and that is provided with a reel (132), which serves for rolling-up the inner tractive element (13).

6. Drive device (1) according to one of the claims 1-5, **wherein** the outer and, if provided, the inner tractive element (12, 13) are connected to the winding shaft (11) or with the end of the cover (10) that is facing the winding shaft (11).

7. Drive device (1) according to one of the claims 1-6, **wherein** the outer tractive element (12) is guided over an upper exit pulley (125) to the first traction device (120) and/or that the inner tractive element (13) is guided over a lower exit pulley (135) to the second traction device (130), wherein the upper exit pulley (125) and/or the lower exit pulley (135) is located at the outlet opening (35) of the device compartment (3), through which the cover (10) is expelled towards the liquid container (2).

8. Drive device (1) according to one of the claims 1-7, **wherein** the outer and/or the inner tractive element

(12, 13) is made from plastic, textile material or metal and is embodied as rope or ribbon with a breadth preferably in the range of 1cm to 20cm.

9. Drive device (1) according to one of the claims 1-8, **wherein** the cover (10) comprises profile elements (100) that are flexibly connected with one another and that are aligned perpendicular to the direction of transport, which profile elements (100) are buoyant and/or are guided by a guide device along the edge of the liquid container (2).

10. Drive device (1) according to one of the claims 5-9 **wherein** the winding shaft (11) is fixedly coupled via a first coupling device (155, 156, 157) with the first drive unit (110) and that the at least one reel shaft (1210) is coupled with a second drive unit (120) or via a second coupling device (152), which comprises a compensating device (1511, 1512), with the first drive unit (110).

11. Drive device (1) according to claim 10, **wherein** the reel shaft (1210) is held on one side by the first coupling device (151) and on the other side by a second coupling device (152), which comprises a free-wheel each (1511 or 1521), which hold a sliding-hub each (1512 or 1522) and which block in a first and second direction of rotation respectively, that are opposed to one another, wherein the sliding-hub (1512 or 1522) releases the reel shaft (1210) when a sufficiently high turning moment occurs.

12. Drive device (1) according to claim 10 or 11, **wherein** the first drive unit (110) is integrated into the winding shaft (11).

13. Drive device (1) according to claim 10, 11 or 12, **wherein** the winding shaft (11) can be driven by the first drive unit (110) in both directions.

14. Drive device (1) according to one of the claims 1 - 13, **wherein** a cleaning device (9) is provided on the upper side and/or the lower side of the cover (10), which comprises a brush (91) that preferably is driven by a motor (92) and that abuts on corresponding side of the cover (10).

15. Drive device (1) according to one of the claims 1-14 **wherein** the first drive unit (110) and the provided tractive devices (120, 130) are controllable by a control unit (1100) depending on signals and data, which are derived from sensors (1101, 1102, 1103) or are stored in the control unit (1100) by the user.

VERIFICATION OF TRANSLATION

I hereby declare as follows:

1. That I,

   Peter Rutz

   of

   Rebbergstrasse 3a,
   CH-8915 Hausen am Albis,
   Switzerland,

   am conversant with the English and German languages and am a competent translator thereof.

2. That the following is a true and correct translation in English of the

   WRITTEN OPINION OF THE INTERNATIONAL SEARCHING AUTHORITY
   relating to International application No. PCT/EP2010/063416

Dated this July 31, 2011
Hausen am Albis

(Peter Rutz)

VERIFICATION OF TRANSLATION

I hereby declare as follows:

1. That I,

   Peter Rutz

   of

   Rebbergstrasse 3a,
   CH-8915 Hausen am Albis,
   Switzerland,

   am conversant with the English and German languages and am a competent translator thereof.

2. That the following is a true and correct translation in English of the Claims of

International Patent Application No.	PCT/EP2010/063416
Publication No.:	WO2011/032920A1
Application date:	13.09.2010

   said Claims being attached herewith and
   having been forwarded with e-mail dated July 15, 2011 to Oliff & Berridge, PLC.

Dated this July 31, 2011
Hausen am Albis

(Peter Rutz)

UNITED STATES PATENT AND TRADEMARK OFFICE

UNITED STATES DEPARTMENT OF COMMERCE
United States Patent and Trademark Office
Address: COMMISSIONER FOR PATENTS
P.O. Box 1450
Alexandria, Virginia 22313-1450
www.uspto.gov

APPLICATION NO.	FILING DATE	FIRST NAMED INVENTOR	ATTORNEY DOCKET NO.	CONFIRMATION NO.
13/145,026	07/18/2011	Arthur Schwerzmann	150177	1386

25944 7590 11/10/2011
OLIFF & BERRIDGE, PLC
P.O. BOX 320850
ALEXANDRIA, VA 22320-4850

EXAMINER

ART UNIT	PAPER NUMBER
3634	

NOTIFICATION DATE	DELIVERY MODE
11/10/2011	ELECTRONIC

Please find below and/or attached an Office communication concerning this application or proceeding.

The time period for reply, if any, is set in the attached communication.

Notice of the Office communication was sent electronically on above-indicated "Notification Date" to the following e-mail address(es):

OfficeAction25944@oliff.com
jarmstrong@oliff.com

UNITED STATES PATENT AND TRADEMARK OFFICE

Commissioner for Patents
United States Patent and Trademark Office
P.O. Box 1450
Alexandria, VA 22313-1450
www.uspto.gov

NOV - 9 2011

OLIFF & BERRIDGE, PLC
P.O, BOX 320850
ALEXANDRIA VA 22320-4850

In re application of Authur Schwerzmann Application No. 13/145,026 Filed: July 18, 2011 For: DRIVE DEVICE FOR THE COVER OF A LIQUID CONTAINER	**DECISION ON REQUEST TO PARTICIPATE IN PATENT PROSECUTION HIGHWAY PROGRAM AND PETITION TO MAKE SPECIAL UNDER 37 CFR 1.102(a)**

This is a decision on the request to participate in the Patent Prosecution Highway (PPH) program and the petition under 37 CFR 1.102(a), filed August 2, 2011, to make the above-identified application special.

The request and petition are **GRANTED**.

A grantable request to participate in the PPH program and petition to make special require:

(1) The U.S. application must disclose an eligible relationship to one or more PCT applications filed in the JPO or USPTO;
(2) Applicant must submit a copy of the allowable/patentable claim(s) from the PCT application(s) latest international work product (the written opinion or the IPER) along with an English translation thereof and a statement that the English translation is accurate;
(3) All the claims in the U.S. application must sufficiently correspond or be amended to sufficiently correspond to the allowable/patentable claim(s) in the PCT application(s);
(4) Examination of the U.S. application has not begun;
(5) Applicant must submit a copy of the latest international work product from the PCT application containing the allowable/patentable claim(s) along with an English translation thereof and a statement that the English translation is accurate;
(6) Applicant must submit an IDS listing the documents cited by the PCT examiner in the international work product along with copies of documents except U.S. patents or U.S. patent application publications.

In light of the petition being properly submitted via EFS-Web as is required, the request to participate in the PPH program complies with the above requirements, the above-identified application has been accorded "special" status.

All other inquiries concerning the examination or status of the application should be directed to the Patent Application Information Retrieval (PAIR) system.

The application is being forwarded to the examiner for action on the merits commensurate with this decision.

Any inquiry regarding this decision should be directed to Mikado Buiz, Quality Assurance Specialist, at (571) 272-6578.

/ Mikado Buiz /

Mikado Buiz,
Quality Assurance Specialist
Technology Center 3600

MB/MB: 11/08/11

IN THE UNITED STATES PATENT AND TRADEMARK OFFICE

APPLICANT	:	Tsukuo ISHITOYA
SERIAL NO.	:	**13/145,035**
FILED	:	18 July 2011
FOR	:	HIGH-PRESSURE FLUID SUPPLY APPARATUS
GROUP ART UNIT	:	1727 Conf. No. **1445**
EXAMINER	:	ENIN-OKUT, EDU E

SUBMISSION OF REQUEST FOR PARTICIPATION IN THE PATENT COOPERATION TREATY - PATENT PROSECUTION HIGHWAY (PCT-PPH) PROGRAM BETWEEN JPO AND US PTO

COMMISSIONER FOR PATENTS
PETITIONS BRANCH
P. O. Box 1450
Alexandria, VA 22313-1450

Attention: Magdalen Greenlief

Sir:

Applicant hereby requests participation in the PCT-Patent Prosecution Highway (PCT-PPH) Program and ***petitions to make this application special under the PCT-PPH Program***. To comply with the requirements, the following papers are transmitted:

1) Request For Participation in the Patent Cooperation Treaty - Patent Prosecution Highway (PCT-PPH) Program Between the JPO and the USPTO with claims correspondence table (Form PTO/SB/20PCT-JP);

2) Japanese language version of international work product (IPRP) in PCT/JP2009/050646, i.e., PCT/ISA/373;

3) English Translation of IPRP/Written Opinion (PCT/ISA/373/237.

REMARKS

In view of the foregoing documents transmitted herewith to comply with the Requirements For Participation in the Patent Cooperation Treaty - Patent Prosecution Highway (PPH) Program between the JPO and the USPTO, Applicant respectfully requests participation in the program as well as accelerated examination of this application.

The US claims correspond to the claims found to meet the criteria of novelty, inventive step and industrial applicability in the IPRP, as shown in the claims correspondence table attached to the PCT-PPH Request form.

The Examiner is invited to contact the undersigned at (202) 220-4420 to discuss any matter concerning this request.

The Office is authorized to charge any fees related to this filing to Deposit Account No. 11-0600.

Respectfully submitted,

Dated: 18 October 2011

/Daniel G. Shanley/
Daniel G. Shanley
(Reg. No. 54,863)

KENYON & KENYON LLP
1500 K Street, N.W., #700
Washington, D.C. 20005

Telephone: (202) 220-4200
Facsimile: (202) 220-4201

PTO/SB/20PCT-US (09-10)
Approved for use through 01/31/2012. OMB 0651-0058
U.S. Patent and Trademark Office; U. S. DEPARTMENT OF COMMERCE
Under the Paperwork Reduction Act of 1995, no persons are required to respond to a collection of information unless it displays a valid OMB control number.

REQUEST FOR PARTICIPATION IN THE PATENT COOPERATION TREATY - PATENT PROSECUTION HIGHWAY (PCT-PPH) PILOT PROGRAM IN A U.S. APPLICATION WHERE THE USPTO WAS THE ISA OR IPEA

Application No:	13/145,035	Filing date:	18 July 2011
First Named Inventor:	Tsukuo ISHITOYA		
Title of the Invention:	HIGH-PRESSURE FLUID SUPPLY APPARATUS		

THIS REQUEST FOR PARTICIPATION IN THE PCT-PPH PILOT PROGRAM ALONG WITH THE REQUIRED DOCUMENTS MUST BE SUBMITTED VIA EFS-WEB. INFORMATION REGARDING EFS-WEB IS AVAILABLE AT HTTP://WWW.USPTO.GOV/EBC/EFS_HELP.HTML

APPLICANT HEREBY REQUESTS PARTICIPATION IN THE PCT-PPH PROGRAM AND PETITIONS TO MAKE THE ABOVE-IDENTIFIED APPLICATION SPECIAL UNDER THE PCT-PPH PROGRAM.

The above-identified application is (1) a national stage entry of the corresponding PCT application, or (2) a national stage entry of another PCT application which claims priority to the corresponding PCT application, or (3) a national application that claims domestic/ foreign priority to the corresponding PCT application, or (4) a national application which forms the basis for the priority claim in the corresponding PCT application, or (5) a continuing application of a U.S. application that satisfies one of (1) to (4) above, or (6) a U.S. application that claims domestic benefit to a U.S. provisional application which forms the basis for the priority claim in the corresponding PCT application.

The corresponding PCT application number(s) is/are: PCT/JP2009/050646

The international date of the corresponding PCT application(s) is/are: 19 January 2009

I. List of Required Documents:

a. **A copy of the latest international work product (WO/ISA, WO/IPEA, or IPER) in the above-identified corresponding PCT application(s)**

- [x] Is attached
- [ ] Is not attached because the document is already in the U.S. application.

b. **A copy of all claims which were indicated as having novelty, inventive step and industrial applicability in the above-identified corresponding PCT application(s).**

- [ ] Is attached.
- [x] Is not attached because the document is already in the U.S. application.

c. **English translations of the documents in a. and b. above are attached (if the documents are not in the English language). A statement that the English translation is accurate is attached for the document in b. above.**

This collection of information is required by 35 U.S.C. 119, 37 CFR 1.55, and 37 CFR 1.102(d). The information is required to obtain or retain a benefit by the public, which is to file (and by the USPTO to process) an application. Confidentiality is governed by 35 U.S.C. 122 and 37 CFR 1.11 and 1.14. This collection is estimated to take 2 hours to complete, including gathering, preparing, and submitting the completed application form to the USPTO. Time will vary depending upon the individual case. Any comments on the amount of time you require to complete this form and/or suggestions for reducing this burden should be sent to the Chief Information Officer, U.S. Patent and Trademark Office, U.S. Department of Commerce, P.O. Box 1450, Alexandria, VA 22313-1450. DO NOT SEND FEES OR COMPLETED FORMS TO THIS ADDRESS.

Approved for use through 01/31/2012. OMB 0651-0058
U.S.Patent and Trademark Office; U.S. DEPARTMENT OF COMMERCE
Under the Paperwork Reduction Act of 1995, no persons are required to respond to a collection of information unless it displays a valid OMB control number.

REQUEST FOR PARTICIPATION IN THE PCT-PPH PILOT PROGRAM IN A U.S. APPLICATION WHERE THE USPTO WAS THE ISA OR IPEA (continued)

Application No.:	13/145,035
First Named Inventor:	Tsukuo ISHITOYA

d. **(1) An information disclosure statement listing the documents cited in the international work products (ISR, WO/ISA, WO/IPEA, IPER) of the corresponding PCT application.**

☐ Is attached

☒ Has already been filed in the above-identified U.S. application on 18 July 2011

(2) Copies of all documents (except) for U.S. patents or U.S. patent application publications)

☐ Are attached.

☒ Have already been filed in the above-identified U.S. application on 18 July 2011

II. Claims Correspondence Table:

Claims in US Application	Patentable Claims in the corresponding PCT Application	Explanation regarding the correspondence
1	1	US claim 1 corresponds to PCT claim 1.
2	2	US claim 2 corresponds to PCT claim 2.
3	3	US claim 3 corresponds to PCT claim 3.
4	4	US claim 4 corresponds to PCT claim 4.
5	5	US claim 5 corresponds to PCT claim 5.
6	6	US claim 6 corresponds to PCT claim 6.

III. All the claims in the US application sufficiently correspond to the patentable claims in the corresponding PCT application.

Signature /Daniel G. Shanley/	Date 18 October 2011
Name (Print/Typed) Daniel G. Shanley	Registration Number 54,863

PATENT COOPERATION TREATY

PCT

INTERNATIONAL PRELIMINARY REPORT ON PATENTABILITY

(Chapter I of the Patent Cooperation Treaty)

(PCT Rule 44*bis*)

Applicant's or agent's file reference TSN20082008W	**FOR FURTHER ACTION**	See item 4 below
International application No. PCT/JP2009/050646	International filing date *(day/month/year)* 19 January 2009 (19.01.2009)	Priority date *(day/month/year)*
International Patent Classification (8th edition unless older edition indicated) See relevant information in Form PCT/ISA/237		
Applicant TOYOTA JIDOSHA KABUSHIKI KAISHA		

1. This international preliminary report on patentability (Chapter I) is issued by the International Bureau on behalf of the International Searching Authority under Rule 44 *bis*.1(a).

2. This REPORT consists of a total of 4 sheets, including this cover sheet.

   In the attached sheets, any reference to the written opinion of the International Searching Authority should be read as a reference to the international preliminary report on patentability (Chapter I) instead.

3. This report contains indications relating to the following items:

☒	Box No. I	Basis of the report
☐	Box No. II	Priority
☐	Box No. III	Non-establishment of opinion with regard to novelty, inventive step and industrial applicability
☐	Box No. IV	Lack of unity of invention
☒	Box No. V	Reasoned statement under Article 35(2) with regard to novelty, inventive step or industrial applicability; citations and explanations supporting such statement
☐	Box No. VI	Certain documents cited
☐	Box No. VII	Certain defects in the international application
☐	Box No. VIII	Certain observations on the international application

4. The International Bureau will communicate this report to designated Offices in accordance with Rules 44*bis*.3(c) and 93*bis*.1 but not, except where the applicant makes an express request under Article 23(2), before the expiration of 30 months from the priority date (Rule 44*bis* .2).

	Date of issuance of this report 16 August 2011 (16.08.2011)
The International Bureau of WIPO 34, chemin des Colombettes 1211 Geneva 20, Switzerland Facsimile No. +41 22 338 82 70	Authorized officer Yukari Nakamura e-mail: pt07.pct@wipo.int

PATENT COOPERATION TREATY

TRANSLATION

From the
INTERNATIONAL SEARCHING AUTHORITY

To:

PCT

WRITTEN OPINION OF THE
INTERNATIONAL SEARCHING AUTHORITY

(PCT Rule 43*bis*.1)

Date of mailing *(day/month/year)*	
Applicant's or agent's file reference TSN20082008W	**FOR FURTHER ACTION** See paragraph 2 below

International application No.	International filing date *(day/month/year)*	Priority date *(day/month/year)*
PCT/JP2009/050646	19.01.2009	

International Patent Classification (IPC) or both national classification and IPC

Applicant
TOYOTA JIDOSHA KABUSHIKI KAISHA

1. This opinion contains indications relating to the following items:

- [x] Box No. I — Basis of the opinion
- [ ] Box No. II — Priority
- [ ] Box No. III — Non-establishment of opinion with regard to novelty, inventive step and industrial applicability
- [ ] Box No. IV — Lack of unity of invention
- [x] Box No. V — Reasoned statement under Rule 43*bis*.1(a)(i) with regard to novelty, inventive step or industrial applicability; citations and explanations supporting such statement
- [ ] Box No. VI — Certain documents cited
- [ ] Box No. VII — Certain defects in the international application
- [ ] Box No. VIII — Certain observations on the international application

2. **FURTHER ACTION**

If a demand for international preliminary examination is made, this opinion will be considered to be a written opinion of the International Preliminary Examining Authority ("IPEA") except that this does not apply where the applicant chooses an Authority other than this one to be the IPEA and the chosen IPEA has notified the International Bureau under Rule 66.1*bis*(b) that written opinions of this International Searching Authority will not be so considered.

If this opinion is, as provided above, considered to be a written opinion of the IPEA, the applicant is invited to submit to the IPEA a written reply together, where appropriate, with amendments, before the expiration of 3 months from the date of mailing of Form PCT/ISA/220 or before the expiration of 22 months from the priority date, whichever expires later.

For further options, see Form PCT/ISA/220.

3. For further details, see notes to Form PCT/ISA/220.

Name and mailing address of the ISA/JP	Date of completion of this opinion	Authorized officer
Facsimile No.		Telephone No.

WRITTEN OPINION OF THE INTERNATIONAL SEARCHING AUTHORITY

International application No.
PCT/JP2009/050646

Box No. I **Basis of this opinion**

1. With regard to the **language**, this opinion has been established on the basis of:

   ☒ the international application in the language in which it was filed

   ☐ a translation of the international application into _____ , which is the language of a translation furnished for the purposes of international search (Rules 12.3(a) and 23.1(b)).

2. ☐ This opinion has been established taking into account the **rectification of an obvious mistake** authorized by or notified to this Authority under Rule 91 (Rule 43*bis*.1(a))

3. With regard to any **nucleotide and/or amino acid sequence** disclosed in the international application and necessary to the claimed invention, this opinion has been established on the basis of:

   a. type of material

   ☐ a sequence listing

   ☐ table(s) related to the sequence listing

   b. format of material

   ☐ on paper

   ☐ in electronic form

   c. time of filing/furnishing

   ☐ contained in the international application as filed

   ☐ filed together with the international application in electronic form

   ☐ furnished subsequently to this Authority for the purposes of search

4. ☐ In addition, in the case that more than one version or copy of a sequence listing and/or table(s) relating thereto has been filed or furnished, the required statements that the information in the subsequent or additional copies is identical to that in the application as filed or does not go beyond the application as filed, as appropriate, were furnished.

5. Additional comments:

WRITTEN OPINION OF THE INTERNATIONAL SEARCHING AUTHORITY

International application No.
PCT/JP2009/050646

Box No. V **Reasoned statement under Rule 43bis.1(a)(i) with regard to novelty, inventive step or industrial applicability; citations and explanations supporting such statement**

1. Statement

Novelty (N)	Claims	1-6	YES
	Claims		NO
Inventive step (IS)	Claims	1-6	YES
	Claims		NO
Industrial applicability (IA)	Claims	1-6	YES
	Claims		NO

2. Citations and explanations:

The invention as in claims 1-6 is not disclosed in any of the documents cited in the ISR, and thus is novel and involves an inventive step.

PATENT COOPERATION TREATY

PCT

INTERNATIONAL PRELIMINARY REPORT ON PATENTABILITY

(Chapter I of the Patent Cooperation Treaty)

(PCT Rule 44*bis*)

Applicant's or agent's file reference TSN20082008W	**FOR FURTHER ACTION**	See item 4 below
International application No. PCT/JP2009/050646	International filing date *(day/month/year)* 19 January 2009 (19.01.2009)	Priority date *(day/month/year)*
International Patent Classification (8th edition unless older edition indicated) See relevant information in Form PCT/ISA/237		
Applicant TOYOTA JIDOSHA KABUSHIKI KAISHA		

1. This international preliminary report on patentability (Chapter I) is issued by the International Bureau on behalf of the International Searching Authority under Rule 44 *bis*.1(a).

2. This REPORT consists of a total of 4 sheets, including this cover sheet.

   In the attached sheets, any reference to the written opinion of the International Searching Authority should be read as a reference to the international preliminary report on patentability (Chapter I) instead.

3. This report contains indications relating to the following items:

☒	Box No. I	Basis of the report
☐	Box No. II	Priority
☐	Box No. III	Non-establishment of opinion with regard to novelty, inventive step and industrial applicability
☐	Box No. IV	Lack of unity of invention
☒	Box No. V	Reasoned statement under Article 35(2) with regard to novelty, inventive step or industrial applicability; citations and explanations supporting such statement
☐	Box No. VI	Certain documents cited
☐	Box No. VII	Certain defects in the international application
☐	Box No. VIII	Certain observations on the international application

4. The International Bureau will communicate this report to designated Offices in accordance with Rules 44*bis*.3(c) and 93*bis*.1 but not, except where the applicant makes an express request under Article 23(2), before the expiration of 30 months from the priority date (Rule 44*bis* .2).

	Date of issuance of this report 19 July 2011 (19.07.2011)
The International Bureau of WIPO 34, chemin des Colombettes 1211 Geneva 20, Switzerland Facsimile No. +41 22 338 82 70	Authorized officer Yukari Nakamura e-mail: pt07.pct@wipo.int

特許協力条約

発信人　日本国特許庁（国際調査機関）

代理人

稲葉　良幸

様

あて名
〒106-6123
日本国東京都港区六本木６－１０－１
六本木ヒルズ森タワー２３階
ＴＭＩ総合法律事務所

ＰＣＴ
国際調査機関の見解書
（法施行規則第40条の2）
〔ＰＣＴ規則43の2.1〕

発送日 （日.月.年）	１０．０２．２００９
出願人又は代理人 の書類記号　TSN20082008W	今後の手続きについては、下記２を参照すること。

国際出願番号	国際出願日	優先日
ＰＣＴ／ＪＰ２００９／０５０６４６	（日.月.年）　１９．０１．２００９	（日.月.年）

国際特許分類（ＩＰＣ）Int.Cl. F17D1/20(2006.01)i, F17D1/04(2006.01)i, H01M8/04(2006.01)i

出願人（氏名又は名称）
トヨタ自動車株式会社

１．この見解書は次の内容を含む。

- ☑ 第Ｉ欄　見解の基礎
- ☐ 第Ⅱ欄　優先権
- ☐ 第Ⅲ欄　新規性、進歩性又は産業上の利用可能性についての見解の不作成
- ☐ 第Ⅳ欄　発明の単一性の欠如
- ☑ 第Ⅴ欄　ＰＣＴ規則43の2.1(a)(i)に規定する新規性、進歩性又は産業上の利用可能性についての見解、それを裏付けるための文献及び説明
- ☐ 第Ⅵ欄　ある種の引用文献
- ☐ 第Ⅶ欄　国際出願の不備
- ☐ 第Ⅷ欄　国際出願に対する意見

２．今後の手続き
国際予備審査の請求がされた場合は、出願人がこの国際調査機関とは異なる国際予備審査機関を選択し、かつ、その国際予備審査機関がＰＣＴ規則66.1の2(b)の規定に基づいて国際調査機関の見解書を国際予備審査機関の見解書とみなさない旨を国際事務局に通知していた場合を除いて、この見解書は国際予備審査機関の最初の見解書とみなされる。

この見解書が上記のように国際予備審査機関の見解書とみなされる場合、様式ＰＣＴ／ＩＳＡ／２２０を送付した日から３月又は優先日から２２月のうちいずれか遅く満了する期限が経過するまでに、出願人は国際予備審査機関に、適当な場合は補正書とともに、答弁書を提出することができる。

さらなる選択肢は、様式ＰＣＴ／ＩＳＡ／２２０を参照すること。

３．さらなる詳細は、様式ＰＣＴ／ＩＳＡ／２２０の備考を参照すること。

見解書を作成した日
０３．０２．２００９

名称及びあて先	特許庁審査官（権限のある職員）	３０	８８１４
日本国特許庁（ＩＳＡ／ＪＰ） 郵便番号１００－８９１５ 東京都千代田区霞が関三丁目４番３号	久保　竜一 電話番号　０３－３５８１－１１０１　内線　３３５８		

様式ＰＣＴ／ＩＳＡ／２３７（表紙）（２００７年４月）

国際調査機関の見解書

国際出願番号　ＰＣＴ／ＪＰ２００９／０５０６４６

第Ｉ欄　見解の基礎

１．言語に関し、この見解書は以下のものに基づき作成した。

☑ 出願時の言語による国際出願

☐ 出願時の言語から国際調査のための言語である ＿＿＿＿＿＿ 語に翻訳された、この国際出願の翻訳文（ＰＣＴ規則12.3(a)及び23.1(b)）

２．☐ この見解書は、ＰＣＴ規則 91 の規定により国際調査機関が認めた又は国際調査機関に通知された明らかな誤りの訂正を考慮して作成した（ＰＣＴ規則 43 の 2.1(b)）。

３．この国際出願で開示されたヌクレオチド又はアミノ酸配列に関して、以下に基づき見解書を作成した。

ａ．タイプ　☐ 配列表

☐ 配列表に関連するテーブル

ｂ．フォーマット　☐ 紙形式

☐ 電子形式

ｃ．提出時期　☐ 出願時の国際出願に含まれていたもの

☐ この国際出願と共に電子形式により提出されたもの

☐ 出願後に、調査のために、この国際調査機関に提出されたもの

４．☐ さらに、配列表又は配列表に関連するテーブルを提出した場合に、出願後に提出した配列若しくは追加して提出した配列が出願時に提出した配列と同一である旨、又は、出願時の開示を超える事項を含まない旨の陳述書の提出があった。

５．補足意見：

国際調査機関の見解書

国際出願番号　ＰＣＴ／ＪＰ２００９／０５０６４６

第Ｖ欄　新規性、進歩性又は産業上の利用可能性についてのＰＣＴ規則43の2.1(a)(i)に定める見解、それを裏付ける文献及び説明

１．　見解

新規性（N）	請求の範囲	１－６	有
	請求の範囲		無
進歩性（ＩＳ）	請求の範囲	１－６	有
	請求の範囲		無
産業上の利用可能性（ＩＡ）	請求の範囲	１－６	有
	請求の範囲		無

２．　文献及び説明

請求の範囲１－６に係る発明は、国際調査報告で引用された何れの文献にも開示されておらず、新規性、進歩性を有する。

UNITED STATES PATENT AND TRADEMARK OFFICE

UNITED STATES DEPARTMENT OF COMMERCE
United States Patent and Trademark Office
Address: COMMISSIONER FOR PATENTS
P.O. Box 1450
Alexandria, Virginia 22313-1450
www.uspto.gov

APPLICATION NO.	FILING DATE	FIRST NAMED INVENTOR	ATTORNEY DOCKET NO.	CONFIRMATION NO.
13/145,035	07/18/2011	Tsukuo Ishitoya	14006/217	1445

23838 7590 11/15/2011
KENYON & KENYON LLP
1500 K STREET N.W.
SUITE 700
WASHINGTON, DC 20005

EXAMINER
ENIN-OKUT, EDU E

ART UNIT	PAPER NUMBER
1727	

MAIL DATE	DELIVERY MODE
11/15/2011	PAPER

Please find below and/or attached an Office communication concerning this application or proceeding.

The time period for reply, if any, is set in the attached communication.

UNITED STATES PATENT AND TRADEMARK OFFICE

Commissioner for Patents
United States Patent and Trademark Office
P.O. Box 1450
Alexandria, VA 22313-1450
www.uspto.gov

BC

November 15, 2011

In re application of	:	DECISION ON REQUEST TO
Tsukuo Ishitoya	:	PARTICIPATE IN PATENT
Serial No. 13/145,035	:	PROSECUTION HIGHWAY
Filed: July 18, 2011	:	PROGRAM AND
Attorney Docket No: 14006/217	:	PETITION TO MAKE SPECIAL
	:	UNDER 37 CFR 1.102(a)

This is a decision on the request to participate in the PCT Patent Prosecution Highway (PCT-PPH) pilot program and the petition under 37 CFR 1.102(a), filed October 18, 2011, to make the above-identified application special.

The request and petition are **GRANTED**.

A grantable request to participate in the PCT-PPH pilot program and petition to make special require:

(1) The U.S. application must disclose an eligible relationship to one or more PCT applications where the ISA or IPEA are the APO, IPA, JPO, KIPO, NBPR, NPI, EPO, Rospatent, IPOS, SPTO, PRV, UK IPO or USPTO;

(2) At least one claim in the PCT application has novelty, inventive step, and industrial applicability and must be free of any observations in Box VIII in the latest work product in the international stage or applicant must identify and explain why the claim(s) is/are not subject to the observation in Box VIII;

(3) Applicant must submit a copy of the claim(s) from the PCT application(s) that have novelty, inventive step, and industrial applicability along with an English translation thereof and a statement that the English translation is accurate, if the claims are not in the English language;

(4) All the claims in the U.S. application must sufficiently correspond or be amended to sufficiently correspond to the claim(s) that have novelty, inventive step, and industrial applicability in the PCT application(s);

(5) Examination of the U.S. application has not begun;

(6) Applicant must submit a copy of the latest international work product from the PCT application indicating that the claim(s) have novelty, inventive step, and industrial applicability along with an English translation thereof if the latest international work

product is not in the English language; and

(7) Applicant must submit an IDS listing the documents cited by the PCT examiner in the international work product along with copies of documents except U.S. patents or U.S. patent application publications.

The request to participate in the PPH program and petition comply with the above requirements. Accordingly, the above-identified application has been accorded "special" status.

The application is being forwarded to the examiner for action on the merits commensurate with this decision.

Any inquiry regarding this decision should be directed to Blaine Copenheaver, Quality Assurance Specialist, at (571) 272-1156.

All other inquiries concerning the examination or status of the application is accessible in the PAIR system at http://www.uspto.gov/ebc/index.html.

/Blaine Copenheaver/

Blaine Copenheaver
Quality Assurance Specialist
Technology Center 1700

UNITED STATES PATENT AND TRADEMARK OFFICE

Commissioner for Patents
United States Patent and Trademark Office
P.O. Box 1450
Alexandria, VA 22313-1450
www.uspto.gov

MAILED

AUG 25 2011

PCT LEGAL ADMINISTRATION

Casimir Jones, S.C.
2275 DEMING WAY, SUITE 310
MIDDLETON WI 53562

In re Application of	:	
CHINNAIYAN	:	DECISION ON PETITION
Application No.: 13/145,067	:	
PCT No.: PCT/US2010/020501	:	UNDER 37 CFR 1.137(b)
Int. Filing Date: 08 January 2010	:	
Priority Date: 09 January 2009	:	
Atty. Docket No.: UM-30742/US-3/PCT	:	
For: RECURRENT GENE FUSIONS IN CANCER	:	

The petition to revive under 37 CFR 1.137(b) filed 18 July 2011 in the above-captioned application is hereby **GRANTED** as follows:

Applicant's statement that "the entire delay in filing the required reply form the due date for the required reply until the filing of a grantable petition under 37 CFR 1.137(b) was unintentional" and the prompt filing of the petition satisfies the requirement of 37 CFR 1.137(b)(3).

A review of the application file reveals that applicant has provided the proper reply in the form of payment of the full, U.S. Basic National Fee. Therefore, the request to revive the application abandoned under 35 U.S.C. 371(d) is granted as to the National stage in the United States of America.

This application is being returned to the United States Designated/Elected Office (DO/EO/US) for treatment in accordance with this decision.

Derek A. Putonen
Attorney Advisor
Office of PCT Legal Administration
Tel: (571) 272-3294

UNITED STATES PATENT and TRADEMARK OFFICE

COMMISSIONER FOR PATENTS
UNITED STATES PATENT AND TRADEMARK OFFICE
P.O BOX 1450
ALEXANDRIA, VA 22313-1450
www.uspto.gov

Michael Zalobsky
Harness, Dickey & Pierce, P.L.C.
P.O. Box 828
Bloomfield Hills, Michigan 48303

MAILED
SEP 14 2011
PCT LEGAL ADMINISTRATION

In re Application of	:	DECISION ON
MA et al :	:	
Application No.: 13/145,081	:	
PCT No.: PCT/CA2009/001394	:	
Filing Date: 30 September 2009	:	PETITION UNDER
Priority Date: 02 October 2008	:	
Attorney's Docket No.: 15417-000005/US/NP	:	
For: Compact Tensioner With Sustainable Damping	:	37 CFR 1.137(b)

This decision is in response to applicants' "Petition For Revival Of An International Application For Patent Designating The U.S. Abandoned Unintentionally Under 37 CFR 1.137(b)," filed 18 July 2011.

BACKGROUND

On 30 September 2009, this international application was filed, claiming an earliest priority date of 02 October 2008.

The deadline for paying the basic national fee in the United States under 35 U.S.C. 371 and 37 CFR 1.495 was 04 April 2011 (since 02 April 2011 was a Saturday). This international application became abandoned with respect to the United States at midnight on 04 April 2011 for failure to pay the required basic national fee.

On 18 July 2011, applicant filed in the United States Patent and Trademark Office (PTO) a transmittal letter for entry into the national stage in the U.S. under 35 U.S.C. 371, which was accompanied by, *inter alia*, the national basic fee, petition fee, and a petition under 37 CFR 1.137(b).

DISCUSSION

A grantable petition to revive an abandoned application under 37 CFR 1.137(b) must be accompanied by (1) the required reply, unless previously filed. In a nonprovisional application abandoned for failure to prosecute, the required reply may be met by the filing of a continuing application; (2) the petition fee as set forth in § 1.17(m); and (3) a statement that the entire delay in filing the required reply from the due date for the reply until the filing of a grantable petition pursuant to this paragraph was unintentional. The Commissioner may require additional information where there is a question whether the delay was unintentional; and (4) any terminal disclaimer (and fee as set forth in § 1.20 (d)) required pursuant to paragraph (c) of this section.

Petitioner has provided: (1) the proper reply by submitting the basic national filing fee, (2) the petition fee set forth in §1.17(m) and (3) the proper statement under 137(b)(3). In this application, no terminal disclaimer is required.

Accordingly, the petition is deemed to satisfy requirements (1), (2), (3), and (4) under 37 CFR 1.137(b).

DECISION

The petition under 37 CFR 1.137(b) is **GRANTED**.

This application is being returned to the United States Designated/Elected Office (DO/EO/US) for continued processing.

Rafael Bacares
PCT Legal Examiner
PCT Legal Office
Telephone: (571) 272-3276
Facsimile: (571) 273-0459

Stephany Shockley, Ph.D.

UNITED STATES PATENT AND TRADEMARK OFFICE

Commissioner for Patents
United States Patent and Trademark Office
P.O. Box 1450
Alexandria, VA 22313-1450
www.uspto.gov

MAILED

NOV 08 2011

PCT LEGAL ADMINISTRATION

HERBERT L. ALLEN
ALLEN, DYER, DOPPELT, MILBRATH & GILCHRIST, P.A.
255 SOUTH ORANGE AVENUE, SUITE 1401
P. O. BOX 3791
ORLANDO FL 32802-3791

In re Application of METHLEY et al.	:	DECISION ON
Application No.: 13/145,103	:	
PCT No.: PCT/IB10/50357	:	PETITION UNDER
Int. Filing: 27 January 2010	:	
Priority Date: 30 January 2009	:	37 CFR 1.137(b)
Attorney Docket No:0116781	:	
For: CAMSHAFT AND PHASER ASSEMBLY	:	

The petition to revive under 37 CFR 1.137(b) filed 16 August 2011 in the above-captioned application is hereby **GRANTED** as follows:

Applicant's statement that "the entire delay in filing the required reply from the due date for the required reply until the filing of a grantable petition under 37 CFR 1.137(b) was unintentional" meets the requirements of 37 CFR 1.137(b)(3).

A review of the application file reveals that the basic national fee has been provided. The required petition fee was also paid. Thus, the requirements of 37 CFR 1.137(b) have been satisfied. Therefore, the request to revive the application abandoned under 35 U.S.C. 371(d) is granted as to the National stage in the United States of America.

This application is being forwarded to the United States Designated/Elected Office for further processing including issuance of a Notification of Missing Requirements, indicating that an oath or declaration, in compliance with 37 CFR 1.497(a) and (b), is required along with the surcharge for filing the oath or declaration after the thirty-month period. Specifically, the executed declaration submitted on 18 July 2011 does not identify the citizenship of the inventors and thus, is not in compliance with 37 CFR 1.497(a).

/Cynthia M. Kratz/
Cynthia M. Kratz
Attorney Advisor
PCT Legal Office
Office of PCT Legal Administration
Telephone: (571) 272-3286

Doc Code: PET.GREEN
Document Description: Petition for Green Tech Pilot

PTO/SB/420 (03-11)

PETITION TO MAKE SPECIAL UNDER THE GREEN TECHNOLOGY PILOT PROGRAM

Attorney Docket Number: 31644U	Application Number (if known): 13/145,188	Filing date: July 19, 2011

First Named Inventor: ZOHAR, Yotam

Title: SOLAR COMBINED CYCLE POWER SYSTEMS

APPLICANT HEREBY REQUESTS TO PARTICIPATE IN THE GREEN TECHNOLOGY PILOT PROGRAM FOR THE ABOVE-IDENTIFIED APPLICATION. See Instruction Sheet on page 2.

This petition must be timely filed electronically using the USPTO electronic filing system, EFS-Web.

1. By filing this petition:

   Applicant is requesting early publication: Applicant hereby requests early publication under 37 CFR 1.219 and the publication fee set forth in 37 CFR 1.18(d) accompanies this request.

2. By filing this petition: applicant is agreeing to make an election without traverse in a telephonic interview and elect an invention that meets the eligibility requirements for the Green Technology Pilot Program, if the Office determines that the claims are not obviously directed to a single invention. See Instruction Sheet.

3. This request is accompanied by statements of special status for the eligibility requirement.

4. The application contains no more than three (3) independent claims and twenty (20) total claims.

5. The application does not contain any multiple dependent claims.

6. Other attachments: _____

Signature /Susanne M. Hopkins/	Date July 19, 2011
Name (Print/Typed) Susanne M. Hopkins	Registration Number 33,247

Note: *Signatures of all the inventors or assignees of record of the entire interest or their representative(s) are required in accordance with 37 CFR 1.33 and 11.18. Please see 37 CFR 1.4(d) for the form of the signature. If necessary, submit multiple forms for more than one signature, see below*.*

☒ *Total of 1 forms are submitted.

If you need assistance in completing the form, call 1-800-PTO-9199 and select option 2.

Instruction Sheet for
Petition to Make Special Under the Green Technology Pilot Program

(Not to be Submitted to the USPTO)

The following is a summary of the requirements (for more information see the notices (i) "Pilot Program for Green Technologies Including Greenhouse Gas Reduction," (ii) "Elimination of Classification Requirement in the Green Technology Pilot Program," and (iii) "Expansion and Extension of the Green Technology Pilot Program," available on the USPTO web site at http://www.uspto.gov/patents/init_events/green_tech.jsp):

(1) The application must be a non-reissue, non-provisional utility application filed under 35 U.S.C. 111(a), or an international application that has entered the national stage in compliance with 35 U.S.C. 371, irrespective of the filing date of the application. Reexamination proceedings are excluded from this pilot program.

(2) The application must contain three or fewer independent claims and twenty or fewer total claims. The application must not contain any multiple dependent claims. For an application that contains more than three independent claims or twenty total claims, or multiple dependent claims, applicant must file a preliminary amendment in compliance with 37 CFR 1.121 to cancel the excess claims and/or the multiple dependent claims at the time the petition to make special is filed.

(3) The claims must be directed to a single invention that materially enhances the quality of the environment, or that materially contributes to: (1) the discovery or development of renewable energy resources; (2) the more efficient utilization and conservation of energy resources; or (3) green house gas emission reduction (see the eligibility requirements of sections II and III of the notice (i) cited above). The petition must include a statement that, if the USPTO determines that the claims are directed to multiple inventions (e.g., in a restriction requirement), applicant will agree to make an election without traverse in a telephonic interview, and elect an invention that meets the eligibility requirements in section II or III of the notice (i) cited above.

(4) The petition to make special must be timely filed electronically using the USPTO electronic filing system, EFS-Web, and selecting the document description of "Petition for Green Tech Pilot" on the EFS-Web screen. Applicant should use form PTO/SB/420, which is available as a Portable Document Format (PDF) fillable form in EFS-Web and on the USPTO Web site.

(5) The petition to make special must be filed at least one day prior to the date that a first Office action (which may be an Office action containing only a restriction requirement) appears in the Patent Application Information Retrieval (PAIR) system. Applicant may check the status of the application using PAIR.

(6) The petition to make special must be accompanied by a request for early publication in compliance with 37 CFR 1.219 and the publication fee set forth in 37 CFR 1.18(d).

Privacy Act Statement

The **Privacy Act of 1974 (P.L. 93-579)** requires that you be given certain information in connection with your submission of the attached form related to a patent application or patent. Accordingly, pursuant to the requirements of the Act, please be advised that: (1) the general authority for the collection of this information is 35 U.S.C. 2(b)(2); (2) furnishing of the information solicited is voluntary; and (3) the principal purpose for which the information is used by the U.S. Patent and Trademark Office is to process and/or examine your submission related to a patent application or patent. If you do not furnish the requested information, the U.S. Patent and Trademark Office may not be able to process and/or examine your submission, which may result in termination of proceedings or abandonment of the application or expiration of the patent.

The information provided by you in this form will be subject to the following routine uses:

1. The information on this form will be treated confidentially to the extent allowed under the Freedom of Information Act (5 U.S.C. 552) and the Privacy Act (5 U.S.C 552a). Records from this system of records may be disclosed to the Department of Justice to determine whether disclosure of these records is required by the Freedom of Information Act.
2. A record from this system of records may be disclosed, as a routine use, in the course of presenting evidence to a court, magistrate, or administrative tribunal, including disclosures to opposing counsel in the course of settlement negotiations.
3. A record in this system of records may be disclosed, as a routine use, to a Member of Congress submitting a request involving an individual, to whom the record pertains, when the individual has requested assistance from the Member with respect to the subject matter of the record.
4. A record in this system of records may be disclosed, as a routine use, to a contractor of the Agency having need for the information in order to perform a contract. Recipients of information shall be required to comply with the requirements of the Privacy Act of 1974, as amended, pursuant to 5 U.S.C. 552a(m).
5. A record related to an International Application filed under the Patent Cooperation Treaty in this system of records may be disclosed, as a routine use, to the International Bureau of the World Intellectual Property Organization, pursuant to the Patent Cooperation Treaty.
6. A record in this system of records may be disclosed, as a routine use, to another federal agency for purposes of National Security review (35 U.S.C. 181) and for review pursuant to the Atomic Energy Act (42 U.S.C. 218(c)).
7. A record from this system of records may be disclosed, as a routine use, to the Administrator, General Services, or his/her designee, during an inspection of records conducted by GSA as part of that agency's responsibility to recommend improvements in records management practices and programs, under authority of 44 U.S.C. 2904 and 2906. Such disclosure shall be made in accordance with the GSA regulations governing inspection of records for this purpose, and any other relevant (*i.e.*, GSA or Commerce) directive. Such disclosure shall not be used to make determinations about individuals.
8. A record from this system of records may be disclosed, as a routine use, to the public after either publication of the application pursuant to 35 U.S.C. 122(b) or issuance of a patent pursuant to 35 U.S.C. 151. Further, a record may be disclosed, subject to the limitations of 37 CFR 1.14, as a routine use, to the public if the record was filed in an application which became abandoned or in which the proceedings were terminated and which application is referenced by either a published application, an application open to public inspection or an issued patent.
9. A record from this system of records may be disclosed, as a routine use, to a Federal, State, or local law enforcement agency, if the USPTO becomes aware of a violation or potential violation of law or regulation.

UNITED STATES PATENT AND TRADEMARK OFFICE

UNITED STATES DEPARTMENT OF COMMERCE
United States Patent and Trademark Office
Address: COMMISSIONER FOR PATENTS
P.O. Box 1450
Alexandria, Virginia 22313-1450
www.uspto.gov

APPLICATION NO.	FILING DATE	FIRST NAMED INVENTOR	ATTORNEY DOCKET NO.	CONFIRMATION NO.
13/145,188	07/19/2011	Yotam Zohar	31644U	2934

20529 7590 09/22/2011
THE NATH LAW GROUP
112 South West Street
Alexandria, VA 22314

EXAMINER

ART UNIT	PAPER NUMBER
3748	

MAIL DATE	DELIVERY MODE
09/22/2011	PAPER

Please find below and/or attached an Office communication concerning this application or proceeding.

The time period for reply, if any, is set in the attached communication.

UNITED STATES PATENT AND TRADEMARK OFFICE

Commissioner for Patents
United States Patent and Trademark Office
P.O. Box 1450
Alexandria, VA 22313-1450
www.uspto.gov

THE NATH LAW GROUP
112 South West Street
Alexandria VA 22314

In re Application of	:	
ZOHAR, YOTAM . et al	:	DECISION ON PETITION
Application No. 13/145,188	:	TO MAKE SPECIAL UNDER
Filed: July 19, 2011	:	THE GREEN TECHNOLOGY
Attorney Docket No. **31644U**	:	PILOT PROGRAM

This is a decision on the renewed petition under 37 CFR 1.102, filed July 19, 2011 to make the above-identified application special under the pilot program for applications pertaining to Green Technologies as set forth in 74 Federal Register Notice 64666 (December 8, 2009) and amended by 75 Federal Register Notice 28554 (May 21, 2010) and 75 Federal Register Notice 69049 (November 10, 2010).

The petition is **granted.**

A grantable petition to make an application special under 37 CFR 1.102 and the pilot program as set forth in 74 FR 64666 must be directed to a nonprovisional application filed under 35 USC 111(a) or be a national stage entry under 35 USC 371, exclusive of any reissue applications.

In order to qualify for special status, the following requirements must be met. 1) The application must have no more than 3 independent claims and no more than 20 total claims. 2) The application must not contain any multiple dependent claims. 3) The petition must state the basis for seeking special status, i.e., the claimed invention either: A) materially enhances the quality of the environment or B) materially contributes to: i) the discovery or development of renewable energy resources, ii) the more efficient utilization and conservation of energy resources, or iii) greenhouse gas emission reduction. 4) If the disclosure is not clear on its face that the claimed invention materially contributes under category (A) or (B), the petition must be accompanied by a statement by the applicant, assignee, or an attorney/agent registered to practice before the Office explaining how the materiality standard is met. 5) A statement that applicant will agree to make an election without traverse in a telephonic interview if a restriction requirement is made by the examiner. 6) The petition to make special must be filed electronically. 7) The petition must be filed at least one day prior to the date that a first Office Action appears in the Patent Application Information Retrieval (PAIR) system. 8) The petition must be accompanied by a request for early publication in compliance with 37 CFR 1.219 and include the publication fee as set forth in 37 CFR 1.18(d).

The requirement for a fee for consideration of the petition to make special for applications pertaining to Green Technologies has been waived.

The instant petition complies with items 1 – 8 above. Accordingly, the above-identified application has been accorded "special" status.

Telephone inquires concerning this decision should be directed to Henry C. Yuen at 571-272-4856.

This application will be forwarded to the Technology Center Art Unit 3748 for action on the merits commensurate with this decision.

/Henry C. Yuen/

Henry C. Yuen
Quality Assurance Specialist
Technology Center TC 3700

Modified PTO/SB/20PCT-JP (01-2010)
Approved for use through 01/31/2012. OMB 0651-0058
U.S. Patent and Trademark Office; U.S. DEPARTMENT OF COMMERCE
Under the Paperwork Reduction Act of 1995, no persons are required to respond to a collection of information unless it displays a valid OMB control number.

REQUEST FOR PARTICIPATION IN THE PATENT COOPERATION TREATY - PATENT PROSECUTION HIGHWAY (PCT-PPH) PILOT PROGRAM BETWEEN THE JAPAN PATENT OFFICE (JPO) AND THE USPTO

Application No.:	13/145,193	Filing Date:	July 19, 2011
First Named Inventor:	Osamu OIDA et al.	Attorney Docket No.:	2011_1012A
Title of the Invention:	PLASMA DISPLAY PANEL AND METHOD FOR MANUFACTURING THE SAME		

THIS REQUEST FOR PARTICIPATION IN THE PCT-PPH PILOT PROGRAM ALONG WITH THE REQUIRED DOCUMENTS MUST BE SUBMITTED VIA EFS-WEB. INFORMATION REGARDING EFS-WEB IS AVAILABLE AT HTTP://WWW.USPTO.GOV/EBC/EFS_HELP.HTML

APPLICANT HEREBY REQUESTS PARTICIPATION IN THE PCT-PPH PROGRAM AND PETITIONS TO MAKE THE ABOVE-IDENTIFIED APPLICATION SPECIAL UNDER THE PCT-PPH PROGRAM.

The above-identified application is (1) a national stage entry of the corresponding PCT application, or (2) a national stage entry of another PCT application which claims priority to the corresponding PCT application, or (3) a national application that claims domestic/ foreign priority to the corresponding PCT application, or (4) a national application which forms the basis for the priority claim in the corresponding PCT application, or (5) a continuing application of a U.S. application that satisfies one of (1) to (4) above, or (6) a U.S. application that claims domestic benefit to a U.S. provisional application which forms the basis for the priority claim in the corresponding PCT application.

The corresponding PCT application number(s) is/are: PCT/JP2011/000941

The international date of the corresponding PCT application(s) is/are: February 21, 2011

I. List of Required Documents:

a. A copy of the latest international work product (WO/ISA, WO/IPEA, or IPER) in the above–identified corresponding PCT application(s)

[X] is attached.
[ ] is <u>not</u> attached because the document is already in the U.S. application.

b. A copy of all claims which were indicated as having novelty, inventive step and industrial applicability in the above-identified corresponding PCT application(s).

[X] is attached.
[ ] is <u>not</u> attached because the document is already in the U.S. application.

c. English translations of the documents in a. and b. above are attached (if the documents are not in the English language). A statement that the English translation is accurate is attached for the document in b. above.

d. (1) An information disclosure statement listing the documents cited in the international work products (ISR, WO/ISA, WO/IPEA, IPER) of the corresponding PCT application.

[ ] is attached.
[X] Has already been filed in the above-identified U.S. application on July 19, 2011.

(2) Copies of all documents (except for U.S. patents or U.S. patent application publications)

[ ] Are attached.
[X] Have already been filed in the above-identified U.S. application on July 19, 2011.

This collection of information is required by 35 U.S.C. 119, 37 CFR 1.55, and 37 CFR 1.102(d). The information is required to obtain or retain a benefit by the public, which is to file (and by the USPTO to process) an application. Confidentiality is governed by 35 U.S.C. 122 and 37 CFR 1.11 and 1.14. This collection is estimated to take 2 hours to complete, including gathering, preparing, and submitting the completed application form to the USPTO. Time will vary depending upon the individual case. Any comments on the amount of time you require to complete this form and/or suggestions for reducing this burden should be sent to the Chief Information Officer, U.S. Patent and Trademark Office, U.S. Department of Commerce, P.O. Box 1450, Alexandria, VA 22313-1450. DO NOT SEND FEES OR COMPLETED FORMS TO THIS ADDRESS.

Modified PTO/SB/20PCT-JP (01-2010)
Approved for use through 01/31/2012. OMB 0651-0058
U.S. Patent and Trademark Office; U.S. DEPARTMENT OF COMMERCE
Under the Paperwork Reduction Act of 1995, no persons are required to respond to a collection of information unless it displays a valid OMB control number.

REQUEST FOR PARTICIPATION IN THE PCT-PPH PILOT PROGRAM BETWEEN THE JPO AND THE USPTO

(continued)

Application No.:	13/145,193
First Named Inventor:	Osamu OIDA et al.

II. Claims Correspondence Table:

Claims in US Application	Patentable Claims in the corresponding PCT Application	Explanation regarding the correspondence
1	1	Same
2	2	Same
3	3	Same
4	4	Same
5	5	US claim amended to reflect amendments to PCT claim under Article 19
6	6	Same
7	7	Same
8	8	Same

III. All the claims in the US application sufficiently correspond to the patentable claims in the corresponding PCT application.

Signature /Jeffrey R. Filipek/ 2011.07.19 14:56:33 -04'00'	Date: July 19, 2011
Name: (Print/Type) Jeffrey R. Filipek	Registration No. 41,471

PATENT COOPERATION TREATY

From THE JAPAN PATENT OFFICE
INTERNATIONAL SEARCHING AUTHORITY

To:
PANASONIC CORPORATION
Attn. Naito, Hiroki
1006, Oaza Kadoma
Kadoma-shi
Osaka 571-8501
JAPAN

PCT

WRITTEN OPINION OF THE
INTERNATIONAL SEARCHING AUTHORITY
(Implementing Regulation 40 bis 2)
(PCT Rule 43*bis*.1)

Date of mailing *(day/month/year)* 12/04/2011	
Applicant's or agent's file reference P606538P0	**FOR FURTHER ACTION** See paragraph 2 below

International application No.	International filing date *(day/month/year)*	Priority date *(day/month/year)*
PCT/JP2011/000941	21/02/2011	25/02/2010

International Patent Classification (IPC) Int. Cl. H01J11/02(2006.01)i, H01J9/02(2006.01)i, H01J9/26(2006.01)i

Applicant
PANASONIC CORPORATION

1. This opinion contains indications relating to the following items:

- ☒ Box No. I Basis of the opinion
- ☐ Box No. II Priority
- ☐ Box No. III Non-establishment of opinion with regard to novelty, inventive step and industrial applicability
- ☐ Box No. IV Lack of unity of invention
- ☒ Box No. V Reasoned statement under Rule 43*bis*.1(a)(i) with regard to novelty, inventive step or industrial applicability; citations and explanations supporting such statement
- ☐ Box No. VI Certain documents cited
- ☒ Box No. VII Certain defects in the international application
- ☐ Box No. VIII Certain observations on the international application

2. **FURTHER ACTION**

If a demand for international preliminary examination is made, this opinion will be considered to be a written opinion of the International Preliminary Examining Authority ("IPEA") except that this does not apply where the applicant chooses an Authority other than this one to be the IPEA and the chosen IPEA has notified the International Bureau under Rule 66.1*bis*(b) that written opinions of this International Searching Authority will not be so considered.

If this opinion is, as provided above, considered to be a written opinion of the IPEA, the applicant is invited to submit to the IPEA a written reply together, where appropriate, with amendments, before the expiration of 3 months from the date of mailing of Form PCT/ISA/220 or before the expiration of 22 months from the priority date, whichever expires later.

For further options, see Form PCT/ISA/220.

3. For further details, see notes to Form PCT/ISA/220.

Date of completion of this opinion 30/03/2011	
Name and mailing address of the ISA/JP Japan Patent Office 3-4-3, Kasumigaseki, Chiyoda-ku, Tokyo 100-8915 Japan	JPO Examiner (Authorized officer) 2G 9806 Gou YAMAGUCHI Telephone No. 03-3581-1101 (Ext. 3226)

WRITTEN OPINION OF THE
INTERNATIONAL SEARCHING AUTHORITY

International Application No.
PCT/JP2011/000941

Box No. I Basis of this opinion

1. With regard to the language, this opinion has been established on the basis of:

☒ the international application in the language in which it was filed

☐ a translation of the international application into _____ , which is the language of a translation furnished for the purposes of international search (Rules 12.3(a) and 23.1(b)).

2. ☐ This opinion has been established taking into account the rectification of an obvious mistake authorized by or notified to this Authority under Rule 91 (Rule 43*bis*.1(a))

3. With regard to any nucleotide and/or amino acid sequence disclosed in the international application and necessary to the claimed invention, this opinion has been established on the bases of:

a. format of material

☐ on paper

☐ in electronic form

b. time of filing/furnishing

☐ contained in the international application as filed

☐ filed together with the international application in electronic form

☐ furnished subsequently to this Authority for the purpose of search

4. ☐ In addition, in the case that more than one version or copy of a sequence listing and/or table(s) relating thereto has been filed or furnished, the required statements that the information in the subsequent or additional copies is identical to that in the application as filed or does not go beyond the application as filed, as appropriate, were furnished.

5. Additional comments:

WRITTEN OPINION OF THE
INTERNATIONAL SEARCHING AUTHORITY

International Application No.
PCT/JP2011/000941

Box No. V Reasoned statement under Rule 43 bis.1(a)(i) with regard to novelty, inventive step or industrial applicability; citations and explanations supporting such statement

1. Statement

Novelty (N)	Claims	1-8	YES
	Claims		NO
Inventive step (IS)	Claims	1-8	YES
	Claims		NO
Industrial applicability (IA)	Claims	1-8	YES
	Claims		NO

2. Citations and explanations:

Document 1: JP 8-185802A (Noritake Co., Limited) 1996/07/16

Document 2: JP 2001-312971A (Mitsubishi Electric Corporation) 2001/11/09

Document 3: WO 2007/023564 A1 (FUJITSU HITACHI PLASMA DISPLAY LIMITED) 2007/03/01

Document 4: JP 2002-42661A (NEC Corporation) 2002/02/08

Claim 1-8

The invention according to claim 1-8 is not disclosed in any of the documents cited in the International Search Report, and has a novelty and an inventive step.

Especially, the following respect has not been disclosed in any of the above documents: a deformation point of a second glass member in a bonding layer is lower than a softening point of a first glass member in a sealing member, and a softening point of the second glass member is higher than the softening point of the first glass member.

WRITTEN OPINION OF THE
INTERNATIONAL SEARCHING AUTHORITY

International Application No.
PCT/JP2011/000941

Box No. VII Certain defects in the international application

The following defects in the form or contents of the international application have been noted:

Considering the description "...contains not less than 10 mol% and 40 mol% of Bi_2O_3" found in claim 5, the description is regarded as a misprint of "... contains not less than 10 mol% and not more than 40 mol% of Bi_2O_3"

特許協力条約

発信人　日本国特許庁（国際調査機関）

代理人
内藤　浩樹
様

あて名
〒571-8501
大阪府門真市大字門真１００６番地
パナソニック株式会社内

ＰＣＴ
国際調査機関の見解書
（法施行規則第40条の2）
〔ＰＣＴ規則43の2.1〕

発送日 （日.月.年）	１２．０４．２０１１
出願人又は代理人 の書類記号　P606538P0	今後の手続きについては、下記２を参照すること。

国際出願番号	国際出願日	優先日
ＰＣＴ／ＪＰ２０１１／０００９４１	（日.月.年）　２１．０２．２０１１	（日.月.年）　２５．０２．２０１０

国際特許分類（ＩＰＣ）Int.Cl. H01J11/02(2006.01)i, H01J9/02(2006.01)i, H01J9/26(2006.01)i

出願人（氏名又は名称）
パナソニック株式会社

１．この見解書は次の内容を含む。

- ☑ 第Ｉ欄　見解の基礎
- ☐ 第II欄　優先権
- ☐ 第III欄　新規性、進歩性又は産業上の利用可能性についての見解の不作成
- ☐ 第IV欄　発明の単一性の欠如
- ☑ 第Ｖ欄　ＰＣＴ規則43の2.1(a)(i)に規定する新規性、進歩性又は産業上の利用可能性についての見解、それを裏付けるための文献及び説明
- ☐ 第VI欄　ある種の引用文献
- ☑ 第VII欄　国際出願の不備
- ☐ 第VIII欄　国際出願に対する意見

２．今後の手続き
国際予備審査の請求がされた場合は、出願人がこの国際調査機関とは異なる国際予備審査機関を選択し、かつ、その国際予備審査機関がＰＣＴ規則66.1の2(b)の規定に基づいて国際調査機関の見解書を国際予備審査機関の見解書とみなさない旨を国際事務局に通知していた場合を除いて、この見解書は国際予備審査機関の最初の見解書とみなされる。

この見解書が上記のように国際予備審査機関の見解書とみなされる場合、様式ＰＣＴ／ＩＳＡ／２２０を送付した日から３月又は優先日から２２月のうちいずれか遅く満了する期限が経過するまでに、出願人は国際予備審査機関に、適当な場合は補正書とともに、答弁書を提出することができる。

さらなる選択肢は、様式ＰＣＴ／ＩＳＡ／２２０を参照すること。

３．さらなる詳細は、様式ＰＣＴ／ＩＳＡ／２２０の備考を参照すること。

見解書を作成した日
３０．０３．２０１１

名称及びあて先 日本国特許庁（ＩＳＡ／ＪＰ） 郵便番号１００－８９１５ 東京都千代田区霞が関三丁目４番３号	特許庁審査官（権限のある職員） 山口　剛	２Ｇ	９８０６
	電話番号　０３－３５８１－１１０１　内線　３２２６		

様式ＰＣＴ／ＩＳＡ／２３７（表紙）（２００９年7月）

国際調査機関の見解書

国際出願番号　ＰＣＴ／ＪＰ２０１１／０００９４１

第Ｉ欄　見解の基礎

１．言語に関し、この見解書は以下のものに基づき作成した。

☑ 出願時の言語による国際出願

☐ 出願時の言語から国際調査のための言語である ＿＿＿＿＿＿ 語に翻訳された、この国際出願の翻訳文（ＰＣＴ規則12.3(a)及び23.1(b)）

２．☐ この見解書は、ＰＣＴ規則 91 の規定により国際調査機関が認めた又は国際調査機関に通知された明らかな誤りの訂正を考慮して作成した（ＰＣＴ規則 43 の 2.1(b)）。

３．この国際出願で開示されたヌクレオチド又はアミノ酸配列に関して、提出された以下の配列表に基づき見解書を作成した。

ａ．提出手段　☐ 紙形式

☐ 電子形式

ｂ．提出時期　☐ 出願時の国際出願に含まれていたもの

☐ この国際出願と共に電子形式により提出されたもの

☐ 出願後に、調査のために、この国際調査機関に提出されたもの

４．☐ さらに、複数の版の配列表又は配列表の写しを提出した場合、出願後に提出した配列の写し若しくは追加して提出した配列の写しが、出願時に提出した配列と同一である旨又は出願時の開示を超える事項を含まない旨の陳述書の提出があった。

５．補足意見：

国際調査機関の見解書

国際出願番号　ＰＣＴ／ＪＰ２０１１／０００９４１

第Ｖ欄　新規性、進歩性又は産業上の利用可能性についてのＰＣＴ規則 43 の 2.1(a)(i)に定める見解、それを裏付ける文献及び説明

１．　見解

新規性（N）	請求項	１－８	有
	請求項		無
進歩性（ＩＳ）	請求項	１－８	有
	請求項		無
産業上の利用可能性（ＩＡ）	請求項	１－８	有
	請求項		無

２．　文献及び説明

文献１：JP 8-185802 A（株式会社ノリタケカンパニーリミテド）1996.07.16

文献２：JP 2001-312971 A（三菱電機株式会社）2001.11.09

文献３：WO 2007/023564 A1（富士通日立プラズマディスプレイ株式会社）2007.03.01

文献４：JP 2002-42661 A（日本電気株式会社）2002.02.08

請求項１－８

請求項１－８に係る発明は、国際調査報告で引用された上記何れの文献にも開示されておらず、新規性及び進歩性を有する。

特に、接着層が有する第２のガラス部材の屈伏点が、封着部材が有する第１のガラス部材の軟化点より低く、前記第２のガラス部材の軟化点が、前記第１のガラス部材の軟化点より高い点については、上記何れの文献にも開示されていない。

第Ⅶ欄　国際出願の不備

この国際出願の形式又は内容について、次の不備を発見した。

請求項５には「Ｂｉ$_2$Ｏ$_3$を１０モル％以上４０モル％含み、」と記載されているが、当該記載は“Ｂｉ$_2$Ｏ$_3$を１０モル％以上４０モル％以下含み、”の誤記と思料される。

7

VERIFICATION OF TRANSLATION

I, Tsuneo Ikura translator of c/o Panasonic Corporation, Intellectual Property Rights Operations Company, IP Solutions Center, 1-15 Matsuo-cho, Kadoma City, Osaka 571-8504, Japan, hereby declare that I am conversant with the English and Japanese languages and am a competent translator thereof. I further declare that to the best of my knowledge and belief the translation of the attached documents made by me is a true and complete translation.

- Claims of PCT/2011/000941 that were identified as having novelty, inventive step and industrial applicability.

Date: 27. 6. 2011

Signature: Tsuneo Ikura

CLAIMS

1. A plasma display panel, comprising:

a front plate;

a rear plate having barrier ribs;

a sealing member that seals a peripheral edge of the front plate and a peripheral edge of the rear plate together; and

a bonding layer that bonds at least part of the barrier ribs and the front plate to each other, wherein

the sealing member has a first glass member,

the bonding layer has a second glass member, and

a deformation point of the second glass member is lower than a softening point of the first glass member, and a softening point of the second glass member is higher than the softening point of the first glass member.

2. The plasma display panel according to claim 1, wherein

the front plate further has band-like display electrodes,

the barrier ribs include first barrier ribs arranged in a direction intersecting with the display electrodes and second barrier ribs orthogonal to the first barrier ribs, and

the bonding layer bonds at least part of the first barrier ribs and the front plate to each other.

3. The plasma display panel according to claim 2, wherein

the front panel further has a dielectric layer that coats the display electrodes,

the display electrodes include a plurality of bus electrodes arranged in parallel,

the bonding layer bonds the first barrier ribs to the front panel at regions where the plurality of bus electrodes are opposed to the first barrier ribs, and

voids are formed between the front panel and the first barrier ribs at regions where places between the plurality of bus electrodes are opposed to the first barrier ribs.

4. The plasma display panel according to claim 1, wherein

the second glass member contains Bi_2O_3 and B_2O_3, and

a molar ratio of Bi_2O_3 to B_2O_3 in the second glass member is not less than 0.25:1 and not more than 4:1.

5. The plasma display panel according to claim 4, wherein

the second glass member contains Bi_2O_3 not less than 10 mol% and 40 mol%, and B_2O_3 not less than 10 mol% and not more than 40 mol%.

6. A method for manufacturing a plasma display panel which comprises:

a front plate;

a rear plate having barrier ribs;

a sealing member that seals a peripheral edge of the front plate and a

peripheral edge of the rear plate together; and

a bonding layer that bonds at least part of the barrier ribs and the front plate to each other, and

wherein the plasma display panel includes of which a discharge space,

wherein the sealing member has a first glass member, and the bonding layer has a second glass member having a deformation point lower than a softening point of the first glass member, and a softening point higher than the softening point of the first glass member, and

wherein thermal treatment is performed at a temperature higher than the softening point of the first glass member and lower than the softening point of the second glass member, thereby to seal the front plate and the rear plate, and at least part of the barrier ribs and the front plate are bonded to each other.

7. The method for manufacturing the plasma display panel according to claim 6, wherein

pressure is applied all over the front plate and the rear plate when the thermal treatment is performed.

8. The method for manufacturing the plasma display panel according to claim 6, wherein

after the thermal treatment, gas is exhausted from the discharge space at a temperature lower than the deformation point of the second glass member.

請求の範囲

[請求項1]　前面板と、隔壁を有する背面板と、前記前面板の周縁と前記背面板の周縁とを封着する封着部材と、前記隔壁の少なくとも一部と前記前面板とを接着する接着層と、を備え、

前記封着部材は、第１のガラス部材を有し、

前記接着層は、第２のガラス部材を有し、

前記第２のガラス部材の屈伏点は、前記第１のガラス部材の軟化点より低く、前記第２のガラス部材の軟化点は、前記第１のガラス部材の軟化点より高い、

プラズマディスプレイパネル。

[請求項2]　前記前面板は、さらに、帯状の表示電極を有し、

前記隔壁は、前記表示電極と交差する方向に配置された第１の隔壁と、前記第１の隔壁と直交する第２の隔壁とを含み、

前記接着層は、前記第１の隔壁の少なくとも一部と前記前面板とを接着する、

請求項１に記載のプラズマディスプレイパネル。

[請求項3]　前記前面板は、さらに、前記表示電極を被覆する誘電体層を有し、

前記表示電極は、平行に配置された複数のバス電極を含み、

前記接着層は、前記第１の隔壁と、前記前面板における前記複数のバス電極と前記第１の隔壁が対向する領域と、を接着し、

前記前面板における前記複数のバス電極間と前記第１の隔壁が対向する領域には、空隙が形成されている、

請求項２に記載のプラズマディスプレイパネル。

[請求項4]　前記第２のガラス部材は、Bi_2O_3とB_2O_3を含み、

前記第２のガラス部材におけるBi_2O_3とB_2O_3のモル比は、０．２５：１以上４：１以下である、

請求項１に記載のプラズマディスプレイパネル。

[請求項5]　前記第２のガラス部材は、Bi_2O_3を１０モル%以上４０モル%含

み、かつ、B_2O_3を１０モル%以上４０モル%以下含む、

請求項４に記載のプラズマディスプレイパネル。

[請求項6] 前面板と、隔壁を有する背面板と、前記前面板の周縁と前記背面板の周縁とを封着する封着部材と、前記隔壁の少なくとも一部と前記前面板とを接着する接着層と、を備え、内部に放電空間が形成されたプラズマディスプレイパネルの製造方法であって、

前記封着部材は、第１のガラス部材を有し、前記接着層は、前記第１のガラス部材の軟化点より低い屈伏点と前記第１のガラス部材の軟化点より高い軟化点とを有する第２のガラス部材を有し、

前記第１のガラス部材の軟化点より高く、かつ、前記第２のガラス部材の軟化点より低い温度で熱処理することによって前記前面板と前記背面板とを封着し、かつ、前記隔壁の少なくとも一部と前記前面板とを接着する、

プラズマディスプレイパネルの製造方法。

[請求項7] 前記熱処理の際に、前記前面板と前記背面板の全面に亘って圧力を加える、

請求項６に記載のプラズマディスプレイパネルの製造方法。

[請求項8] 前記熱処理の後、前記第２のガラス部材の屈伏点より低い温度で、前記放電空間を排気する、

請求項６に記載のプラズマディスプレイパネルの製造方法。

UNITED STATES PATENT AND TRADEMARK OFFICE

UNITED STATES DEPARTMENT OF COMMERCE
United States Patent and Trademark Office
Address: COMMISSIONER FOR PATENTS
P.O. Box 1450
Alexandria, Virginia 22313-1450
www.uspto.gov

APPLICATION NO.	FILING DATE	FIRST NAMED INVENTOR	ATTORNEY DOCKET NO.	CONFIRMATION NO.
13/145,193	07/19/2011	Osamu Oida	2011_1012A	2976

52349 7590 10/17/2011
WENDEROTH, LIND & PONACK L.L.P.
1030 15th Street, N.W.
Suite 400 East
Washington, DC 20005-1503

EXAMINER
TON, MINH TOAN T

ART UNIT	PAPER NUMBER
2889	

NOTIFICATION DATE	DELIVERY MODE
10/17/2011	ELECTRONIC

Please find below and/or attached an Office communication concerning this application or proceeding.

The time period for reply, if any, is set in the attached communication.

Notice of the Office communication was sent electronically on above-indicated "Notification Date" to the following e-mail address(es):

ddalecki@wenderoth.com
eoa@wenderoth.com

UNITED STATES PATENT AND TRADEMARK OFFICE

Commissioner for Patents
United States Patent and Trademark Office
P.O. Box 1450
Alexandria, VA 22313-1450
www.uspto.gov

WENDEROTH, LIND & PONACK L.L.P.
1030 15th Street, N.W.
Suite 400 East
Washington DC 20005-1503

OCT 17 2011

In re Application of
OIDA et al.
Application No.: 13/145,193
Filed: 19 July 2011
Attorney Docket No.: 2011_1012A
For: PLASMA DISPLAY PANEL AND METHOD FOR MANUFACTURING THE SAME

: DECISION ON REQUEST TO : PARTICIPATE IN THE PATENT : PROSECUTION HIGHWAY : PROGRAM AND PETITION : TO MAKE SPECIAL UNDER : 37 CFR 1.102(a)

This is a decision on the request to participate in the PCT Patent Prosecution Highway (PCT-PPH) pilot program and the petition under 37 CFR 1.102(a), filed on 19 July 2011, to make the above-identified application special.

The request and petition are **GRANTED**.

Discussion

A grantable request to participate in the PCT-PPH pilot program and petition to make special require:

(1) The U.S. application must have an eligible relationship to one or more PCT applications where the ISA or IPEA are the JPO, EPO, KIPO, NPI, or USPTO;

(2) At least one claim in the PCT application has novelty, inventive step, and industrial applicability and must be free of any observations in Box VIII in the latest work product in the international stage or applicant must identify and explain why the claim(s) is/are not subject to the observation in Box VIII;

(3) Applicant must submit a copy of the claim(s) from the PCT application(s) that have novelty, inventive step, and industrial applicability along with an English translation thereof and a statement that the English translation is accurate, if the claims are not in the English language;

(4) All the claims in the U.S. application must sufficiently correspond or be amended to sufficiently correspond to the claim(s) that have novelty, inventive step, and industrial applicability in the PCT application(s);

(5) Examination of the U.S. application has not begun;

(6) Applicant must submit a copy of the latest international work product from the PCT application indicating that the claim(s) have novelty, inventive step, and industrial applicability along with an English translation thereof and a statement that the English translation is accurate if the latest international work product is not in the English language;

(7) Applicant must submit an IDS listing the documents cited by the PCT examiner in the international work product along with copies of documents except U.S. patents or U.S. patent application publications.

(8) Applicant is required to submit a claims correspondence table in English which indicates how all the claims in the U.S. application correspond to the claims indicated as having novelty, inventive step and industrial applicability in the latest international work product.

The request to participate in the PCT-PPH pilot program and petition comply with the above requirements. Accordingly, the above-identified application has been accorded "special" status.

Telephone inquiries concerning this decision should be directed to Colleen Dunn at 571-272-1170.

All other inquiries concerning the examination or status of the application is accessible in the PAIR system at http://www.uspto.gov/ebc.index.html.

This application will be forwarded to the examiner for action on the merits commensurate with this decision once this application's formality reviews have been completed.

/Colleen Dunn/

Colleen Dunn
Quality Assurance Specialist
Technology Center 2800

UNITED STATES PATENT AND TRADEMARK OFFICE

Commissioner for Patents
United States Patent and Trademark Office
P.O. Box 1450
Alexandria, VA 22313-1450
www.uspto.gov

MAILED

JAN 30 2012

OFFICE OF PETITIONS

ANDRUS, SCEALES, STARKE & SAWALL, LLP
100 EAST WISCONSIN AVENUE, SUITE 1100
MILWAUKEE WI 53202

In re Application of
CORCORAN
Application No.: 13/145,243
Filed: July 19, 2011
Attorney Docket No.: 5649-00016
For: ARRESTOR

: DECISION ON REQUEST TO
: PARTICIPATE IN THE PATENT
: PROSECUTION HIGHWAY
: PROGRAM AND PETITION
: TO MAKE SPECIAL UNDER
: 37 CFR 1.102(a)

This is a decision on the request to participate in the PCT Patent Prosecution Highway (PCT-PPH) pilot program and the petition under 37 CFR 1.102(a), filed on January 5, 2012, to make the above-identified application special.

The request and petition are **GRANTED**.

Discussion

A grantable request to participate in the PCT-PPH pilot program and petition to make special require:

(1) The U.S. application must have an eligible relationship to one or more PCT applications where the ISA or IPEA are the JPO, EPO, Australia, Austria, KIPO, NPI, Russia, Finland, Spain, Sweden, China or USPTO;

(2) At least one claim in the PCT application has novelty, inventive step, and industrial applicability and must be free of any observations in Box VIII in the latest work product in the international stage or applicant must identify and explain why the claim(s) is/are not subject to the observation in Box VIII;

(3) Applicant must submit a copy of the claim(s) from the PCT application(s) that have novelty, inventive step, and industrial applicability along with an English translation thereof and a statement that the English translation is accurate, if the claims are not in the English language;

(4) All the claims in the U.S. application must sufficiently correspond or be amended to sufficiently correspond to the claim(s) that have novelty, inventive step, and industrial applicability in the PCT application(s);

(5) Examination of the U.S. application has not begun;

(6) Applicant must submit a copy of the latest international work product from the PCT application indicating that the claim(s) have novelty, inventive step, and industrial applicability along with an English translation thereof and a statement that the English translation is accurate if the latest international work product is not in the English language;

(7) Applicant must submit an IDS listing the documents cited by the PCT examiner in the international work product along with copies of documents except U.S. patents or U.S. patent application publications.

The request to participate in the PPH pilot program and petition comply with the above requirements. Accordingly, the above-identified application has been accorded "special" status.

Inquiries concerning this decision should be directed to the undersigned at (571) 272-6735.

All other inquiries concerning the examination or status of the application is accessible in the PAIR system at http://www.uspto.gov/ebc.index.html.

This application is being forwarded to Technology Center Art Unit 3656 for action on the merits commensurate with this decision.

/Diane Goodwyn/
Diane Goodwyn
Petitions Examiner
Office of Petitions

UNITED STATES PATENT AND TRADEMARK OFFICE

UNITED STATES DEPARTMENT OF COMMERCE
United States Patent and Trademark Office
Address: COMMISSIONER FOR PATENTS
P.O. Box 1450
Alexandria, Virginia 22313-1450
www.uspto.gov

APPLICATION NO.	FILING DATE	FIRST NAMED INVENTOR	ATTORNEY DOCKET NO.	CONFIRMATION NO.
13/145,271	07/19/2011	Shogo Hirai	043888-0899	3513

53080 7590 11/07/2011
MCDERMOTT WILL & EMERY LLP
600 13TH STREET, NW
WASHINGTON, DC 20005-3096

EXAMINER

ART UNIT	PAPER NUMBER
2835	

NOTIFICATION DATE	DELIVERY MODE
11/07/2011	ELECTRONIC

Please find below and/or attached an Office communication concerning this application or proceeding.

The time period for reply, if any, is set in the attached communication.

Notice of the Office communication was sent electronically on above-indicated "Notification Date" to the following e-mail address(es):

mweipdocket@mwe.com

UNITED STATES PATENT AND TRADEMARK OFFICE

Commissioner for Patents
United States Patent and Trademark Office
P.O. Box 1450
Alexandria, VA 22313-1450
www.uspto.gov

MCDERMOTT WILL & EMERY LLP
600 13TH STREET, NW
WASHINGTON DC 20005-3096

***In re* Application of**	**: DECISION ON REQUEST TO**
HIRAI, *et al.*	**: PARTICIPATE IN THE PATENT**
Application No.: 13/145,271	**: PROSECUTION HIGHWAY**
Filed: 19 July 2011	**: PROGRAM AND PETITION**
Attorney Docket No.: 043888-0899	**: TO MAKE SPECIAL UNDER**
For: WIRING BOARD, WIRING BOARD MANUFACTURING METHOD, AND VIA PASTE	**: 37 CFR 1.102(a)**

This is a decision on the request to participate in the Patent Prosecution Highway (PPH) program and the petition under 37 CFR 1.102(a), filed 29 July 2011, to make the above-identified application special.

The request and petition are **GRANTED**.

Discussion

A grantable request to participate in the PPH pilot program and petition to make special require:

1. The U.S. application is
    a. a Paris Convention application which either
        i. validly claims priority under 35 U.S.C. 119(a) and 37 CFR 1.55 to one or more applications filed in the JPO, or
        ii. validly claims priority to a PCT application that contains no priority claims, or
    b. a national stage application under the PCT (an application which entered the national stage in the U.S. from a PCT international application after compliance with 35 U.S.C. 371), which PCT application
        i. validly claims priority to an application filed in the JPO, or
        ii. validly claims priority to a PCT application that contains no priority claims, or
        iii. contains no priority claim, or
    c. a so-called bypass application filed under 35 U.S.C. 111(a) which validly claims benefit under 35 U.S.C. 120 to a PCT application, which PCT application
        i. validly claims priority to an application filed in the JPO, or
        ii. validly claims priority to a PCT application that contains no priority claims, or
        iii. contains no priority claim;

2. Applicant must submit a copy of:
    a. The allowable/patentable claim(s) from the JPO application(s);
    b. An English translation of the allowable/patentable claim(s) and
    c. A statement that the English translation is accurate;
3. Applicant must:
    a. Ensure all the claims in the U.S. application must sufficiently correspond or be amended to sufficiently correspond to the allowable/patentable claim(s) in the JPO application(s) and
    b. Submit a claims correspondence table in English;
4. Examination of the U.S. application has <u>not</u> begun;
5. Applicant must submit:
    a. Documentation of prior office action:
        i. a copy of the office action(s) just prior to the "Decision to Grant a Patent" from each of the JPO application(s) containing the allowable/patentable claim(s) or
        ii. if the allowable/patentable claims(s) are from a "Notification of Reasons for Refusal" then the Notification of Reasons for Refusal or
        iii. if the JPO application is a first action allowance then no office action from the JPO is necessary should be indicated on the request/petition form;
    b. An English language translation of the JPO Office action from (5)(a)(i)-(ii) above
    c. A statement that the English translation is accurate;
6. Applicant must submit:
    a. An IDS listing the documents cited by the JPO examiner in the JPO office action (unless already submitted in this application)
    b. Copies of the documents except U.S. patents or U.S. patent application publications (unless already submitted in this application);

The request to participate in the PPH pilot program and petition comply with the above requirements. Accordingly, the above-identified application has been accorded "special" status.

Inquiries concerning this decision should be directed to Michael Day at 571-272-1568.

All other inquiries concerning the examination or status of the application is accessible in the PAIR system at http://www.uspto.gov/ebc.index.html.

This application will be forwarded to the examiner for action on the merits commensurate with this decision once this application's formality reviews have been completed.

/Michael Day/
Michael Day
Quality Assurance Specialist
Technology Center 2800

UNITED STATES PATENT AND TRADEMARK OFFICE

Commissioner for Patents
United States Patent and Trademark Office
P.O. Box 1450
Alexandria, VA 22313-1450
www.uspto.gov

MAILED

FEB 10 2012

PCT LEGAL ADMINISTRATION

WINSTON & STRAWN LLP
PATENT DEPARTMENT
1700 K STREET, N.W.
WASHINGTON DC 20006

In re Application of LANDRU et al. Application No.: 13/145,313 PCT No.: PCT/EP09/68014 Int. Filing: 30 December 2009 Priority Date: 22 January 2009 Attorney Docket No.: 4717-37000 For: PROCESS TO DISSOLVE THE OXIDE LAYER IN THE PERIPHERAL RING OF A STRUCTURE OF SEMICONDUCTOR -ON-INSULATOR TYPE	:	DECISION ON PETITION UNDER 37 CFR 1.47(a)

This is a decision on applicant's petition under 37 CFR 1.47(a), filed in the United States Patent and Trademark Office (USPTO) on 07 December 2011, to accept the application without the signature of the joint inventor FABRICE GRITTI.

BACKGROUND

On 07 December 2011, applicant filed a petition under 37 CFR 1.47(a) and a declaration, executed by the joint inventors on behalf of the nonsigning inventor. The petition under 37 CFR 1.47(a), in an attempt to satisfy the requirements of 35 U.S.C. 371(c)(4), requested the acceptance of the application without the signature of inventor FABRICE GRITTI alleging that he refuses to sign the application.

DISCUSSION

A petition under 37 CFR §1.47(a) must be accompanied by (1) the fee under 37 CFR §1.17(g), (2) factual proof that the non-signing joint inventor(s) refuses to execute the application or cannot be reached after diligent effort, (3) a statement of the last known address of the non-signing inventor(s), and (4) an oath or declaration by each available joint inventor on his or her own behalf and on behalf of the non-signing joint inventor(s).

Applicant satisfied Item (1) with the payment of the petition fee.

With regard to item (2), applicant submitted the statement of fact of Anita Gonzalez, employee of S.O.I. TEC Silicon On Insulator Technologies, S.A., assignee. Ms. Gonzalez states that on or about 07 June 2011, she sent a complete copy of the application papers, combined

declaration and power of attorney and assignment to the nonsigning inventor via registered mail, asking him to sign the documents. Again on 17 August 2011, Ms. Gonzalez she sent a complete copy of the application papers, combined declaration and power of attorney and assignment to the nonsigning inventor via registered mail, asking him to sign the documents. In both instances, she confirmed the nonsigning inventor's last known address using an Internet search. (Copies of the search were attached to her statement.) In the first mailing, the French Postal Service returned the papers, with an indication that it notified the addressee (nonsigning inventor) of the letter but the nonsigning inventor did not appear at the post office to accept the mailing. With the second mailing, the French Postal Service returned the papers indicating that the envelope was "not claimed". In light of Ms. Gonzalez's confirmation of Mr. Gritti's postal address and her attempts to deliver the application papers to Mr. Gritti without success, it can now be concluded that the nonsigning inventor refuses to sign the application papers. Item (2) above is satisfied.

Item (3) is satisfied as the last known address of the nonsigning inventor has been provided. Item (4) is satisfied with the submission of the declaration executed by the joint inventors on their behalf and on behalf of the nonsigning inventor.

Thus, Petitioner has satisfied the requirements of 37 CFR 1.47(a). Accordingly, it is appropriate to accord the national stage application status under 37 CFR §1.47(a) at this time.

CONCLUSION

The petition under 37 CFR 1.47(a) is **GRANTED**.

The U.S. Designated/Elected Office has accepted the application as a 37 CFR 1.47(a) application using the declaration filed 19 July 2011. The application has an international filing date of 30 December 2009 under 35 U.S.C. 363, and a date of 19 July 2011 under 35 U.S.C. 371(c).

The Notification of Acceptance (FORM PCT/DO/EO/903) mailed on 04 August 2011 remains in effect.

As provided in 37 CFR 1.47(a), a notice of the filing of this application will be forwarded to the non-signing inventor at his respective last known address of record. Also, a notice of the filing of this application will be published in the Official Gazette.

/Cynthia M. Kratz/
Cynthia M. Kratz
Attorney Advisor
PCT Legal Office
Office of PCT Legal Administration
Telephone: (571) 272-3286
Facsimile (571) 272-0459

UNITED STATES PATENT AND TRADEMARK OFFICE

Commissioner for Patents
United States Patent and Trademark Office
P.O. Box 1450
Alexandria, VA 22313-1450
www.uspto.gov

MAILED

FEB 10 2012

PCT LEGAL ADMINISTRATION

FABRICE GRITTI
15 Quai Jongkind
38000 Grenoble France

In re Application of LANDRU et al.
Application No.: 13/145,313
PCT No.: PCT/EP09/68014
Int. Filing: 30 December 2009
Priority Date: 22 January 2009
Attorney Docket No.: 4717-37000
For: PROCESS TO DISSOLVE THE OXIDE LAYER IN THE PERIPHERAL RING OF A STRUCTURE OF SEMICONDUCTOR -ON-INSULATOR TYPE

Dear Mr. Gritti:

You are named as an inventor in the above identified United States patent application, filed under the provisions of 37 CFR 1.47(a) and 35 U.S.C. § 116. Should a patent be granted, you will be designated as an inventor.

As a named inventor, you are entitled to inspect any paper in the file wrapper of the application, order copies of all or any part thereof (at a prepaid cost per 37 CFR 1.19) or to make your position of record in the application. Alternatively, you may arrange to do any of the preceding through a registered patent agent or attorney presenting written authorization from you. If you care to join in the application, counsel of record (see below) would presumably assist you. Joining in the application would entail the filing of an appropriate oath or declaration by you pursuant to 37 CFR 1.63.

/Cynthia M. Kratz/
Cynthia M. Kratz
Attorney Advisor
PCT Legal Office
Telephone: (571) 272-3286
Facsimile: (571) 273-0459

WINSTON & STRAWN LLP
PATENT DEPARTMENT
1700 K STREET, N.W.
WASHINGTON DC 20006

PTO/SB/20PCT-JP (05-10)
Approved for use through 01/31/2012. OMB 0651-0058
U.S. Patent and Trademark Office; U. S. DEPARTMENT OF COMMERCE
Under the Paperwork Reduction Act of 1995, no persons are required to respond to a collection of information unless it displays a valid OMB control number.

REQUEST FOR PARTICIPATION IN THE PATENT COOPERATION TREATY - PATENT PROSECUTION HIGHWAY (PCT-PPH) PILOT PROGRAM BETWEEN THE JAPAN PATENT OFFICE (JPO) AND THE USPTO

Attorney Docket No.: 1163-0922PUS1

Application No:	13/145,318	Filing date:	July 19, 2011
First Named Inventor:	Mitsuo SHIMOTANI		
Title of the Invention:	MAP DISTRIBUTION SERVER, MAP INFORMATION TERMINAL, AND MAP DISTRIBUTION SYSTEM USING THESE MAP DISTRIBUTION SERVER AND MAP INFORMATION TERMINAL		

THIS REQUEST FOR PARTICIPATION IN THE PCT-PPH PILOT PROGRAM ALONG WITH THE REQUIRED DOCUMENTS MUST BE SUBMITTED VIA EFS-WEB. INFORMATION REGARDING EFS-WEB IS AVAILABLE AT HTTP://WWW.USPTO.GOV/EBC/EFS_HELP.HTML

APPLICANT HEREBY REQUESTS PARTICIPATION IN THE PCT-PPH PROGRAM AND PETITIONS TO MAKE THE ABOVE-IDENTIFIED APPLICATION SPECIAL UNDER THE PCT-PPH PROGRAM.

The above-identified application is (1) a national stage entry of the corresponding PCT application, or (2) a national stage entry of another PCT application which claims priority to the corresponding PCT application, or (3) a national application that claims domestic/ foreign priority to the corresponding PCT application, or (4) a national application which forms the basis for the priority claim in the corresponding PCT application, or (5) a continuing application of a U.S. application that satisfies one of (1) to (4) above, or (6) a U.S. application that claims domestic benefit to a U.S. provisional application which forms the basis for the priority claim in the corresponding PCT application.

The corresponding PCT application number(s) is/are: PCT/JP2009/006307

The international date of the corresponding PCT application(s) is/are: November 24, 2009

I. List of Required Documents:

a. **A copy of the latest international work product (WO/ISA, WO/IPEA, or IPER) in the above–identified corresponding PCT application(s)**

- [✔] Is attached.
- [ ] Is not attached because the document is already in the U.S. application.

b. **A copy of all claims which were indicated as having novelty, inventive step and industrial applicability in the above-identified corresponding PCT application(s).**

- [✔] Is attached.
- [ ] Is not attached because the document is already in the U.S. application.

c. **English translations of the documents in a. and b. above are attached (if the documents are not in the English language). A statement that the English translation is accurate is attached for the document in b. above.**

This collection of information is required by 35 U.S.C. 119, 37 CFR 1.55, and 37 CFR 1.102(d). The information is required to obtain or retain a benefit by the public, which is to file (and by the USPTO to process) an application. Confidentiality is governed by 35 U.S.C. 122 and 37 CFR 1.11 and 1.14. This collection is estimated to take 2 hours to complete, including gathering, preparing, and submitting the completed application form to the USPTO. Time will vary depending upon the individual case. Any comments on the amount of time you require to complete this form and/or suggestions for reducing this burden should be sent to the Chief Information Officer, U.S. Patent and Trademark Office, U.S. Department of Commerce, P.O. Box 1450, Alexandria, VA 22313-1450. DO NOT SEND FEES OR COMPLETED FORMS TO THIS ADDRESS.

Approved for use through 01/31/2012. OMB 0651-0058
U.S.Patent and Trademark Office; U.S. DEPARTMENT OF COMMERCE

Under the Paperwork Reduction Act of 1995, no persons are required to respond to a collection of information unless it displays a valid OMB control number.

REQUEST FOR PARTICIPATION IN THE PCT-PPH PILOT PROGRAM BETWEEN THE JPO AND THE USPTO

(continued)

Application No.:	13/145,318
First Named Inventor:	Mitsuo SHIMOTANI

d. **(1) An information disclosure statement listing the documents cited in the international work products (ISR, WO/ISA, WO/IPEA, IPER) of the corresponding PCT application.**

☐ Is attached

☑ Has already been filed in the above-identified U.S. application on July 19, 2011

(2) Copies of all documents (except) for U.S. patents or U.S. patent application publications)

☐ Are attached.

☑ Have already been filed in the above-identified U.S. application on July 19, 2011

II. Claims Correspondence Table:

Claims in US Application	Patentable Claims in the corresponding PCT Application	Explanation regarding the correspondence
Claim 1	Claim 1	U.S. claim 1 sufficiently corresponds to JP claim 1
Claim 2	Claim 2	U.S. claim 2 sufficiently corresponds to JP claim 2
Claim 3	Claim 3	U.S. claim 3 sufficiently corresponds to JP claim 3
Claim 4	Claim 4	U.S. claim 4 sufficiently corresponds to JP claim 4
Claim 5	Claim 5	U.S. claim 5 sufficiently corresponds to JP claim 5
Claim 6	Claim 6	U.S. claim 6 sufficiently corresponds to JP claim 6
Claim 7	Claim 7	U.S. claim 7 sufficiently corresponds to JP claim 7
Claim 8	Claim 8	U.S. claim 8 sufficiently corresponds to JP claim 8
Claim 9	Claim 9	U.S. claim 9 sufficiently corresponds to JP claim 9
Claim 10	Claim 10	U.S. claim 10 sufficiently corresponds to JP claim 10
Claim 11	Claim 11	U.S. claim 11 sufficiently corresponds to JP claim 11
Claim 12	Claim 12	U.S. claim 12 sufficiently corresponds to JP claim 12
Claim 13	Claim 13	U.S. claim 13 sufficiently corresponds to JP claim 13
Claim 14	Claim 14	U.S. claim 14 sufficiently corresponds to JP claim 14
Claim 15	Claim 15	U.S. claim 15 sufficiently corresponds to JP claim 15
Claim 16	Claim 16	U.S. claim 16 sufficiently corresponds to JP claim 16
Claim 17	Claim 17	U.S. claim 17 sufficiently corresponds to JP claim 17

III. All the claims in the US application sufficiently correspond to the patentable claims in the corresponding PCT application.

Signature	Date December 8, 2011
Name (Print/Typed) Michael K. Mutter	Registration Number 29680

PATENT COOPERATION TREATY

TRANSLATION

From the
INTERNATIONAL SEARCHING AUTHORITY

To:

PCT

WRITTEN OPINION OF THE
INTERNATIONAL SEARCHING AUTHORITY

(PCT Rule 43*bis*.1)

Date of mailing *(day/month/year)*	02.03.2010
Applicant's or agent's file reference 603402WO01	**FOR FURTHER ACTION** See paragraph 2 below

International application No.	International filing date *(day/month/year)*	Priority date *(day/month/year)*
PCT/JP2009/006307	24.11.2009	04.03.2009

International Patent Classification (IPC) or both national classification and IPC

G09B29/00(2006.01)i, G01C21/00(2006.01)i, G06F13/00(2006.01)i, G06F17/30(2006.01)i, G08G1/0969(2006.01)i, G08G1/137(2006.01)i

Applicant

Mitsubishi Electric Corporation

1. This opinion contains indications relating to the following items:

- ☒ Box No. I — Basis of the opinion
- ☐ Box No. II — Priority
- ☐ Box No. III — Non-establishment of opinion with regard to novelty, inventive step and industrial applicability
- ☐ Box No. IV — Lack of unity of invention
- ☒ Box No. V — Reasoned statement under Rule 43*bis*.1(a)(i) with regard to novelty, inventive step or industrial applicability; citations and explanations supporting such statement
- ☐ Box No. VI — Certain documents cited
- ☐ Box No. VII — Certain defects in the international application
- ☐ Box No. VIII — Certain observations on the international application

2. **FURTHER ACTION**

If a demand for international preliminary examination is made, this opinion will be considered to be a written opinion of the International Preliminary Examining Authority ("IPEA") except that this does not apply where the applicant chooses an Authority other than this one to be the IPEA and the chosen IPEA has notified the International Bureau under Rule 66.1*bis*(b) that written opinions of this International Searching Authority will not be so considered.

If this opinion is, as provided above, considered to be a written opinion of the IPEA, the applicant is invited to submit to the IPEA a written reply together, where appropriate, with amendments, before the expiration of 3 months from the date of mailing of Form PCT/ISA/220 or before the expiration of 22 months from the priority date, whichever expires later.

For further options, see Form PCT/ISA/220.

3. For further details, see notes to Form PCT/ISA/220.

Name and mailing address of the ISA/JP	Date of completion of this opinion	Authorized officer
Facsimile No.		Telephone No.

WRITTEN OPINION OF THE INTERNATIONAL SEARCHING AUTHORITY

International application No.
PCT/JP2009/006307

Box No. I **Basis of this opinion**

1. With regard to the **language**, this opinion has been established on the basis of:

   ☒ the international application in the language in which it was filed

   ☐ a translation of the international application into _____, which is the language of a translation furnished for the purposes of international search (Rules 12.3(a) and 23.1(b)).

2. ☐ This opinion has been established taking into account the **rectification of an obvious mistake** authorized by or notified to this Authority under Rule 91 (Rule 43*bis*.1(a))

3. With regard to any **nucleotide and/or amino acid sequence** disclosed in the international application and necessary to the claimed invention, this opinion has been established on the basis of:

   a. type of material

   ☐ a sequence listing

   ☐ table(s) related to the sequence listing

   b. format of material

   ☐ on paper

   ☐ in electronic form

   c. time of filing/furnishing

   ☐ contained in the international application as filed

   ☐ filed together with the international application in electronic form

   ☐ furnished subsequently to this Authority for the purposes of search

4. ☐ In addition, in the case that more than one version or copy of a sequence listing and/or table(s) relating thereto has been filed or furnished, the required statements that the information in the subsequent or additional copies is identical to that in the application as filed or does not go beyond the application as filed, as appropriate, were furnished.

5. Additional comments:

WRITTEN OPINION OF THE INTERNATIONAL SEARCHING AUTHORITY

International application No.
PCT/JP2009/006307

Box No. V **Reasoned statement under Rule 43bis.1(a)(i) with regard to novelty, inventive step or industrial applicability; citations and explanations supporting such statement**

1. Statement

Novelty (N)	Claims	1-17	YES
	Claims		NO
Inventive step (IS)	Claims	1-17	YES
	Claims		NO
Industrial applicability (IA)	Claims	1-17	YES
	Claims		NO

2. Citations and explanations:

Document 1: JP 2005-147713 A (Nissan Motor Co., Ltd.), 09 June 2005, entire text; all drawings

Document 2: JP 2006-126683 A (Hitachi, Ltd.), 18 May 2006, paragraphs [0011] to [0029], [0035] to [0062] & US 2006/0095202 A1 & US 2008/0301263 A1 & EP 1657526 A2

Document 3: JP 2007-271432 A (Alpine Electronics, Inc.), 18 October 2007, paragraphs [0015] to [0029]; fig. 4

The invention as in claims 1-3 and 7-10 is not indicated in any of the documents cited in the ISR and would not be obvious to a person skilled in the art.

None of the documents indicates the following matter from the invention as in claims 1-3 and 7-10: "a reliability status setting means that sets up a reliability status representing reliability of the aforementioned differential map data on the basis of the aforementioned first look-up result; and a sending means that sends distribution data containing the

aforementioned differential map data and the aforementioned reliability status to the aforementioned map information terminal". As a result, the invention as in claims 1-3 and 7-10 provides an advantageous effect wherein "in response to editing request information, it is possible to provide navigation that takes into account the level of reliability of differential map data".

The invention as in claims 4-6 is not indicated in any of the documents cited in the ISR and would not be obvious to a person skilled in the art.

None of the documents indicates the following matter from the invention as in claims 4-6: "an extended map storage means that stores extended map information formed from a photographic image corresponding to a first map information of the aforementioned identical version; a second comparing means that, if the aforementioned first look-up result indicates that information corresponding to the aforementioned editing request information is not present in the aforementioned second map information, looks up the editing request information contained in the aforementioned distribution request using the aforementioned extracted first map information and the aforementioned extended map information; a generating means that generates differential map data in response to the aforementioned distribution request on the basis of the first map information with the aforementioned identical version and the aforementioned second look-up result; a reliability status setting means that sets up a reliability status representing the reliability level of the aforementioned differential map data on the basis of the aforementioned second look-up result; and sending means that sends distribution data containing the

aforementioned differential map data and the aforementioned reliability status to the aforementioned map information terminal". As a result, the invention as in claims 4-6 provides an advantageous effect wherein "in response to editing request information, it is possible to provide navigation that takes into account the level of reliability of differential map data".

The invention as in claims 11-16 is not indicated in any of the documents cited in the ISR and would not be obvious to a person skilled in the art.

None of the documents indicates the following matter from the invention as in claims 11 to 16: "a receiving means that receives, in response to editing request information, distribution data from a map distribution server that contains differential map data, i.e., differential data corresponding to the aforementioned terminal map information, and a reliability status that indicates a reliability level of the aforementioned differential map data"; and "navigation means that performs navigation on the basis of the reliability status contained in the aforementioned distribution data". As a result, the invention as in claims 11-16 provides an advantageous effect wherein "in response to editing request information, it is possible to provide navigation that takes into account the level of reliability of differential map data".

The invention as in claim 17 is not indicated in any of the documents cited in the ISR and would not be obvious to a person skilled in the art.

None of the documents indicates the following matter from the invention as in claim 17: "... formed from a map information terminal that, by way of a communication

Box No. V **Reasoned statement under Rule 43bis.1(a)(i) with regard to novelty, inventive step or industrial applicability; citations and explanations supporting such statement**

network, sends editing request information of a user and receives distribution data as a response to the aforementioned editing request information, and a map distribution server that, by way of the aforementioned communication network, receives the aforementioned editing request information and sends the aforementioned distribution data containing differential map data generated on the basis of the aforementioned editing request information to the aforementioned map information terminal"; and "the aforementioned distribution data contains a reliability status indicating a reliability level of the contained differential data". As a result, the invention as in claim 17 provides an advantageous effect wherein "in response to editing request information, it is possible to provide navigation that takes into account the level of reliability of differential map data".

特許協力条約

発信人　日本国特許庁（国際調査機関）

代理人
高橋省吾
様

あて名
〒100-8310
日本国東京都千代田区丸の内二丁目７番３号三菱電機株式会社　知的財産センター内

ＰＣＴ
国際調査機関の見解書
（法施行規則第40条の2）
〔ＰＣＴ規則43の2.1〕

発送日 （日.月.年）	０２．０３．２０１０
出願人又は代理人の書類記号　603402W001	今後の手続きについては、下記２を参照すること。

国際出願番号	国際出願日	優先日
ＰＣＴ／ＪＰ２００９／００６３０７	（日.月.年）　２４．１１．２００９	（日.月.年）　０４．０３．２００９

国際特許分類（ＩＰＣ）Int.Cl. G09B29/00(2006.01)i, G01C21/00(2006.01)i, G06F13/00(2006.01)i, G06F17/30(2006.01)i, G08G1/0969(2006.01)i, G08G1/137(2006.01)i

出願人（氏名又は名称）
三菱電機株式会社

１．この見解書は次の内容を含む。

- ☑ 第Ｉ欄　見解の基礎
- ☐ 第Ⅱ欄　優先権
- ☐ 第Ⅲ欄　新規性、進歩性又は産業上の利用可能性についての見解の不作成
- ☐ 第Ⅳ欄　発明の単一性の欠如
- ☑ 第Ｖ欄　ＰＣＴ規則43の2.1(a)(i)に規定する新規性、進歩性又は産業上の利用可能性についての見解、それを裏付けるための文献及び説明
- ☐ 第Ⅵ欄　ある種の引用文献
- ☐ 第Ⅶ欄　国際出願の不備
- ☐ 第Ⅷ欄　国際出願に対する意見

２．今後の手続き
国際予備審査の請求がされた場合は、出願人がこの国際調査機関とは異なる国際予備審査機関を選択し、かつ、その国際予備審査機関がＰＣＴ規則66.1の2(b)の規定に基づいて国際調査機関の見解書を国際予備審査機関の見解書とみなさない旨を国際事務局に通知していた場合を除いて、この見解書は国際予備審査機関の最初の見解書とみなされる。

この見解書が上記のように国際予備審査機関の見解書とみなされる場合、様式ＰＣＴ／ＩＳＡ／２２０を送付した日から３月又は優先日から２２月のうちいずれか遅く満了する期限が経過するまでに、出願人は国際予備審査機関に、適当な場合は補正書とともに、答弁書を提出することができる。

さらなる選択肢は、様式ＰＣＴ／ＩＳＡ／２２０を参照すること。

３．さらなる詳細は、様式ＰＣＴ／ＩＳＡ／２２０の備考を参照すること。

見解書を作成した日
１７．０２．２０１０

名称及びあて先	特許庁審査官（権限のある職員）		
日本国特許庁（ＩＳＡ／ＪＰ） 郵便番号１００－８９１５ 東京都千代田区霞が関三丁目４番３号	中澤　言一 電話番号　０３－３５８１－１１０１　内線　３２３７	２Ｂ	３５０１

国際調査機関の見解書

国際出願番号　ＰＣＴ／ＪＰ２００９／００６３０７

第Ｉ欄　見解の基礎

１．言語に関し、この見解書は以下のものに基づき作成した。

☑ 出願時の言語による国際出願

☐ 出願時の言語から国際調査のための言語である ＿＿＿＿＿＿ 語に翻訳された、この国際出願の翻訳文（ＰＣＴ規則12.3(a)及び23.1(b)）

２．☐ この見解書は、ＰＣＴ規則 91 の規定により国際調査機関が認めた又は国際調査機関に通知された明らかな誤りの訂正を考慮して作成した（ＰＣＴ規則 43 の 2.1(b)）。

３．この国際出願で開示されたヌクレオチド又はアミノ酸配列に関して、以下に基づき見解書を作成した。

ａ．タイプ　☐ 配列表

☐ 配列表に関連するテーブル

ｂ．フォーマット　☐ 紙形式

☐ 電子形式

ｃ．提出時期　☐ 出願時の国際出願に含まれていたもの

☐ この国際出願と共に電子形式により提出されたもの

☐ 出願後に、調査のために、この国際調査機関に提出されたもの

４．☐ さらに、配列表又は配列表に関連するテーブルを提出した場合に、出願後に提出した配列若しくは追加して提出した配列が出願時に提出した配列と同一である旨、又は、出願時の開示を超える事項を含まない旨の陳述書の提出があった。

５．補足意見：

国際調査機関の見解書

国際出願番号 ＰＣＴ／ＪＰ２００９／００６３０７

第Ｖ欄　新規性、進歩性又は産業上の利用可能性についてのＰＣＴ規則43の2.1(a)(i)に定める見解、それを裏付ける文献及び説明

１．　見解

新規性（Ｎ）	請求項	1-17	有
	請求項		無
進歩性（ＩＳ）	請求項	1-17	有
	請求項		無
産業上の利用可能性（ＩＡ）	請求項	1-17	有
	請求項		無

２．　文献及び説明

文献１：JP 2005-147713 A（日産自動車株式会社）2005.06.09，全文，全図
文献２：JP 2006-126683 A（株式会社日立製作所）2006.05.18，
段落【0011】-【0029】，【0035】-【0062】
& US 2006/0095202 A1 & US 2008/0301263 A1 & EP 1657526 A2
文献３：JP 2007-271432 A（アルパイン株式会社）2007.10.18，
段落【0015】-【0029】，図４

請求項１－３，７－１０に係る発明は、国際調査報告で引用されたいずれの文献にも記載されておらず、当業者にとって自明なものでもない。
いずれの文献にも、請求項１－３，７－１０に係る発明の「前記第１の照合結果に基づいて、前記差分地図データの信頼度を表す信頼ステータスを設定する信頼ステータス設定手段と、前記差分地図データと前記信頼ステータスとを含む配信データを前記地図情報端末に送信する送信手段」が記載されておらず、請求項１－３，７－１０に係る発明はそれにより「編集要求情報への応答として差分地図データの信頼性の度合いが考慮されたナビゲーションを実現できる」という有利な効果を発揮する。

請求項４－６に係る発明は、国際調査報告で引用されたいずれの文献にも記載されておらず、当業者にとって自明なものでもない。
いずれの文献にも、請求項４－６に係る発明の「前記同一バージョンの第１の地図情報に対応する写真画像からなる拡張地図情報を保有する拡張地図記憶手段と、前記第１の照合結果が前記編集要求情報が前記第２の地図情報に該当する情報が存在しないという結果である場合は、前記抽出された第１の地図情報と前記拡張地図情報とを用いて前記配信要求に含まれる編集要求情報と照合し、第２の照合結果を出力する第２の照合手段と、前記第２の照合結果と前記同一バージョンの第１の地図情報とに基づいて、前記配信要求に応じた差分地図データを生成する生成手段と、前記第２の照合結果に基づいて、前記差分地図データの信頼度を表す信頼ステータスを設定する信頼ステータス設定手段と、前記差分地図データと前記信頼ステータスとを含む配信データを前記地図情報端末に送信する送信手段」が記載されておらず、請求項４－６に係る発明はそれにより「編集要求情報への応答として差分地図データの信頼性の度合いが考慮されたナビゲーションを実現できる」という有利な効果を発揮する。

補充欄

いずれかの欄の大きさが足りない場合

第 Ｖ 欄の続き

請求項１１－１６に係る発明は、国際調査報告で引用されたいずれの文献にも記載されておらず、当業者にとって自明なものでもない。

いずれの文献にも、請求項１１－１６に係る発明の「前記送信された編集要求情報への応答として、前記端末地図情報に対応した差分データである差分地図データと前記差分地図データの信頼度の程度を示す信頼ステータスとを含む配信データを地図配信サーバから受信する受信手段」及び「前記配信データに含まれる信頼ステータスに基づいて、ナビゲーションを実行するナビゲーション手段」が記載されておらず、請求項１１－１６に係る発明はそれにより「編集要求情報への応答として差分地図データの信頼性の度合いが考慮されたナビゲーションを実現できる」という有利な効果を発揮する。

請求項１７に係る発明は、国際調査報告で引用されたいずれの文献にも記載されておらず、当業者にとって自明なものでもない。

いずれの文献にも、請求項１７に係る発明の「通信ネットワークを介して、ユーザの編集要求情報を送信し、前記編集要求情報の応答としての配信データを受信する地図情報端末と、前記通信ネットワークを介して、前記編集要求情報を受信し、前記編集要求情報に基づいて作成した差分地図データを含む前記配信データを前記地図情報端末に送信する地図配信サーバと、からなる」という事項及び「前記配信データは、含まれた差分データの信頼度の程度を示す信頼ステータスをも含むこと」が記載されておらず、請求項１７に係る発明はそれにより「編集要求情報への応答として差分地図データの信頼性の度合いが考慮されたナビゲーションを実現できる」という有利な効果を発揮する。

S T A T E M E N T

International Application No.PCT/JP2009/006307

I, Hideaki TAZAWA, a Japanese citizen of c/o Sanno Patent Office, Akasaka Sanno Center Bldg. 5F, 12-4, Nagata-cho 2-chome, Chiyoda-ku, Tokyo, Japan, do hereby solemnly and sincerely declare as follows:

1. I am well acquainted with both the Japanese language and the English language.

2. I personally made the following translation.

3. The following is a true translation into the English language of the claim(s) from the PCT application No. PCT/JP2009/006307 which was filed on November 24, 2009.

And I make this solemn declaration conscientiously believing the same to be true.

This 18th day of November, 2011

Hideaki TAZAWA

Claims

[1] A map distribution server comprising:

a receiving unit for receiving a distribution request including edit request information about an edit request made by a user and a version of terminal map information held by a map information terminal;

a first map information storage unit for holding a plurality of pieces of already-released first map information;

a second map information storage unit for holding second map information which is most up to date, the second map information including yet-to-be-released map information;

a first comparing unit for extracting first map information of a same version as said terminal map information from among said plurality of pieces of first map information, and for making a comparison with the edit request information included in said distribution request by using said extracted first map information and said second map information to output a first comparison result;

a creating unit for creating difference map data according to said distribution request on a basis of said first comparison result and said first map information of the same version;

a reliance status setting unit for setting a reliance status showing a degree of reliability of said difference map data according to said first comparison result; and

a transmitting unit for transmitting distribution data including said difference map data and said reliance status to said map information terminal.

[2] The map distribution server according to claim 1, wherein when the first comparison result indicates that the edit request

information shows that information corresponding to the second map information exists, the reliance status setting unit sets the reliance status to be of a high order showing that the degree of reliability is high, whereas when the first comparison result indicates that the edit request information shows that information corresponding to the second map information does not exist, the reliance status setting unit sets the reliance status to be of a low order showing that the degree of reliability is low.

[3] The map distribution server according to claim 1, wherein the first comparing unit compares the first map information and the second map information with the edit request information by calculating a matching degree showing a degree of match between them.

[4] A map distribution server comprising:

a receiving unit for receiving a distribution request including edit request information about an edit request made by a user and a version of terminal map information held by a map information terminal;

a first map information storage unit for holding a plurality of pieces of already-released first map information;

a second map information storage unit for holding second map information which is most up to date, the second map information including yet-to-be-released map information;

a first comparing unit for extracting first map information of a same version as said terminal map information from among said plurality of pieces of first map information, and for making a comparison with the edit request information included in said distribution request by using said extracted first map information and said second map information to output

a first comparison result;

an extended map storage unit for holding extended map information comprised of photographic images corresponding to said first map information of the same version;

a second comparing unit for, when the first comparison result indicates that the edit request information shows that information corresponding to the second map information does not exist, making a comparison with the edit request information included in said distribution request by using said extracted first map information and said extended map information to output a second comparison result;

a creating unit for creating difference map data according to said distribution request on a basis of said second comparison result and said first map information of the same version;

a reliance status setting unit for setting a reliance status showing a degree of reliability of said difference map data according to said second comparison result; and

a transmitting unit for transmitting distribution data including said difference map data and said reliance status to said map information terminal.

[5] The map distribution server according to claim 4, wherein when the first comparison result indicates that the edit request information shows that information corresponding to the second map information exists, the reliance status setting unit sets the reliance status to be of a high order showing that the degree of reliability is high, when said first comparison result indicates that said edit request information shows that information corresponding to the second map information does not exist and the second comparison result indicates that said

edit request information shows that information corresponding to the extended map information exists, the reliance status setting unit sets the reliance status to be of an intermediate order showing that the degree of reliability is lower than the degree of reliability shown by said set reliance status of the high order, or when said first comparison result indicates that said edit request information shows that information corresponding to the second map information does not exist and the second comparison result indicates that said edit request information shows that information corresponding to the extended map information does not exist, the reliance status setting unit sets the reliance status to be of a low order showing that the degree of reliability is further lower than the degree of reliability shown by said set reliance status of the intermediate order.

[6] The map distribution server according to claim 4, wherein the first comparing unit compares the first map information and the second map information with the edit request information by calculating a matching degree showing a degree of match between them.

[7] The map distribution server according to claim 1 or 4, wherein the map information terminal is mounted in a vehicle, and the receiving unit receives the distribution request from another terminal which is placed outside said vehicle.

[8] The map distribution server according to claim 7, wherein the other terminal placed outside the vehicle is a PC terminal installed in a building.

[9] The map distribution server according to claim 1 or 4, wherein said map distribution serve further includes an authentication unit for verifying registration of the map

information terminal according to specific terminal ID information set to said map information terminal, and, when said authentication unit verifies that said map information terminal is a registered terminal, the map distribution server distributes the distribution data to said map information terminal, whereas when said authentication unit verifies that said map information terminal is not a registered terminal, said map distribution server sends a reply showing that said map distribution server cannot distribute the distribution data to said map information terminal.

[10] The map distribution server according to claim 1 or 4, wherein said map distribution server further includes a point storage unit for storing distributable points to restrict a number of times that the map information terminal uses the distribution request, and the map distribution server decrements said distributable points according to a number of times that said map information terminal has sent the distribution request, and, when said distributable points become equal to zero, disables the distribution to said map information terminal.

[11] A map information terminal comprising:

a terminal map information storage unit for storing terminal map information;

a terminal handling unit for inputting edit request information about a request to edit said terminal map information;

a transmitting unit for transmitting the inputted edit request information to a distribution server;

a receiving unit for receiving, as a reply to said edit request information transmitted to the distribution server,

distribution data including difference map data which are difference data corresponding to said terminal map information, and a reliance status showing a degree of reliability of said difference map data from the map distribution server;

an updating unit for making a differential update of said terminal map information according to the difference map data included in said distribution data; and

a navigation unit for carrying out navigation according to the reliance status included in said distribution data.

[12] The map information terminal according to claim 11, wherein the reliance status is set according to the degree of reliability of the difference map data to have one of stepwise orders including an order corresponding to a highest degree of reliability and an order corresponding to a lowest degree of reliability.

[13] The map information terminal according to claim 11, wherein a restriction according to the degree of reliability shown by the reliance status is imposed on execution of the navigation carried out by the navigation unit.

[14] The map information terminal according to claim 13, wherein the navigation carried out by the navigation unit includes a map display function of displaying the terminal map information as a map, and the map display is changed according to the reliance status.

[15] The map information terminal according to claim 11, wherein the map information terminal further includes a point storage unit for storing distributable points to restrict a number of times that the map information terminal uses the distribution request transmitted by the transmitting unit, and decrements said distributable points according to a number of

times that said map information terminal has used said distribution request, and, when said distributable points are lost, the distribution to said map information terminal is disabled.

[16] The map information terminal according to claim 15, wherein the map information terminal further includes a connecting terminal to which a storage medium for storing predetermined points is connected, and, when said storage medium is connected to said connecting terminal, said predetermined points are added to the distributable points stored in the point storage unit.

[17] A map distribution system including a map information terminal for transmitting edit request information about an edit request made by a user and receiving distribution data as a reply to said edit request information via a communication network, and a map distribution server for receiving said edit request information via said communication network, and for transmitting said distribution data including difference map data created thereby according to said edit request information to said map information terminal, wherein

said edit request information includes a version of terminal map information held by said map information terminal while said distribution data also include a reliance status showing a degree of reliability of the difference data included therein.

請求の範囲

[請求項1]　ユーザの編集要求情報と地図情報端末が保有する端末地図情報のバージョンとを含む配信要求を受信する受信手段と、

既にリリースした複数の第１の地図情報を保有する第１の地図情報記憶手段と、

リリース前を含む最新の第２の地図情報を保有する第２の地図情報記憶手段と、

前記複数の第１の地図情報から前記端末地図情報のバージョンと同一バージョンの第１の地図情報を抽出し、前記抽出された第１の地図情報と前記第２の地図情報とを用いて前記配信要求に含まれる編集要求情報と照合し、第１の照合結果を出力する第１の照合手段と、

前記第１の照合結果と前記同一バージョンの第１の地図情報とに基づいて、前記配信要求に応じた差分地図データを生成する生成手段と、

前記第１の照合結果に基づいて、前記差分地図データの信頼度を表す信頼ステータスを設定する信頼ステータス設定手段と、

前記差分地図データと前記信頼ステータスとを含む配信データを前記地図情報端末に送信する送信手段と、

から構成された地図配信サーバ。

[請求項2]　信頼ステータス設定手段は、

第１の照合結果が編集要求情報が第２の地図情報に該当する情報が存在するという結果である場合は、信頼ステータスを信頼度が高いことを示す高位に設定し、

前記第１の照合結果が前記編集要求情報が前記第２の地図情報に該当する情報が存在しないという結果である場合は、信頼ステータスを前記設定された高位の信頼度よりも信頼度が低いことを示す低位に設定すること

を特徴とする請求項１に記載の地図配信サーバ。

[請求項3]　第１の照合手段は、第１の地図情報及び第２の地図情報と編集要求情報との照合での一致の程度を示す一致度を算出して照合することを特徴とする請求項１に記載の地図配信サーバ。

[請求項4]　ユーザの編集要求情報と地図情報端末が保有する端末地図情報のバージョンとを含む配信要求を受信する受信手段と、

既にリリースした複数の第１の地図情報を保有する第１の地図情報記憶手段と、

リリース前を含む最新の第２の地図情報を保有する第２の地図情報記憶手段と、

前記複数の第１の地図情報から前記端末地図情報のバージョンと同一バージョンの第１の地図情報を抽出し、前記抽出された第１の地図情報と前記第２の地図情報とを用いて前記配信要求に含まれる編集要求情報と照合し、第１の照合結果を出力する第１の照合手段と、

前記同一バージョンの第１の地図情報に対応する写真画像からなる拡張地図情報を保有する拡張地図記憶手段と、

前記第１の照合結果が前記編集要求情報が前記第２の地図情報に該当する情報が存在しないという結果である場合は、前記抽出された第１の地図情報と前記拡張地図情報とを用いて前記配信要求に含まれる編集要求情報と照合し、第２の照合結果を出力する第２の照合手段と、

前記第２の照合結果と前記同一バージョンの第１の地図情報とに基づいて、前記配信要求に応じた差分地図データを生成する生成手段と、

前記第２の照合結果に基づいて、前記差分地図データの信頼度を表す信頼ステータスを設定する信頼ステータス設定手段と、

前記差分地図データと前記信頼ステータスとを含む配信データを前記地図情報端末に送信する送信手段と、

から構成された地図配信サーバ。

[請求項5]　信頼ステータス設定手段は、

第１の照合結果が編集要求情報が第２の地図情報に該当する情報が存在するという結果である場合は、信頼ステータスを信頼度が高いことを示す高位に設定し、

前記第１の照合結果が前記編集要求情報が前記第２の地図情報に該当する情報が存在しないという結果であって、かつ、第２の照合結果が前記編集要求情報が拡張地図情報に該当する情報が存在するという結果である場合は、信頼ステータスを前記設定された高位の信頼度よりも信頼度が低いことを示す中位に設定し、

前記第１の照合結果が前記編集要求情報が前記第２の地図情報に該当する情報が存在しないという結果であって、かつ、第２の照合結果が前記編集要求情報が拡張地図情報に該当する情報が存在しないという結果である場合は、信頼ステータスを前記設定された中位の信頼度よりもさらに信頼度が低いことを示す低位に設定すること

を特徴とする請求項４に記載の地図配信サーバ。

[請求項6]　第１の照合手段は、第１の地図情報及び第２の地図情報と編集要求情報との照合での一致の程度を示す一致度を算出して照合すること

を特徴とする請求項４に記載の地図配信サーバ。

[請求項7]　地図情報端末は車両に搭載されると共に、受信手段は、前記車両外に置かれた他端末から配信要求を受信すること

を特徴とする請求項１または４に記載の地図配信サーバ。

[請求項8]　車両外に置かれた他端末は、建物内に設置されたＰＣ端末であること

を特徴とする請求項７に記載の地図配信サーバ。

[請求項9]　地図情報端末に設定された固有の端末ＩＤ情報に基づいて前記地図情報端末の登録確認を行う認証手段をさらに備え、

前記地図情報端末が登録端末であると確認された場合は、配信データを配信し、

前記地図情報端末が登録端末で無いと確認された場合は、前記地図情報端末に配信不可の返信を行うこと
を特徴とする請求項１または４に記載の地図配信サーバ。

[請求項10]　地図情報端末の配信要求の使用回数を規制する配信可能ポイントを記憶するポイント記憶手段をさらに備え、
前記地図情報端末からの配信要求の回数に応じて前記配信可能ポイントが減算され、前記配信可能ポイントが無くなった際に配信不可とすること
を特徴とする請求項１または４に記載の地図配信サーバ。

[請求項11]　端末地図情報を記憶する端末地図情報記憶手段と、
前記端末地図情報が編集されるための編集要求情報を入力する端末操作手段と、
入力された編集要求情報を配信サーバに送信する送信手段と、
前記送信された編集要求情報への応答として、前記端末地図情報に対応した差分データである差分地図データと前記差分地図データの信頼度の程度を示す信頼ステータスとを含む配信データを地図配信サーバから受信する受信手段と、
前記配信データに含まれる差分地図データに基づいて、前記端末地図情報を差分更新する更新手段と、
前記配信データに含まれる信頼ステータスに基づいて、ナビゲーションを実行するナビゲーション手段と、
から構成された地図情報端末。

[請求項12]　信頼ステータスは、差分地図データの信頼度の程度に応じて、前記信頼度の最も高い高位と最も低い低位とを含めて、段階的に設定されていること
を特徴とする請求項１１に記載の地図情報端末。

[請求項13]　ナビゲーション手段によって実行されるナビゲーションは、信頼ステータスが示す信頼度の程度に応じて実行機能が制限されること

を特徴とする請求項１１に記載の地図情報端末。

[請求項14]　ナビゲーション手段によって実行されるナビゲーションは、端末地図情報を地図として表示する地図表示機能を含み、

信頼ステータスに応じて地図表示の表現が変わること

を特徴とする請求項１３に記載の地図情報端末。

[請求項15]　送信手段によって送信される配信要求の使用回数を規制する配信可能ポイントを記憶するポイント記憶手段をさらに備え、

前記配信要求の使用回数に応じて前記配信可能ポイントが減算され、前記配信可能ポイントが無くなった際に配信不可となること

を特徴とする請求項１１に記載の地図情報端末。

[請求項16]　所定のポイントを記憶する記憶媒体を接続する接続端子をさらに備え、

前記記憶媒体が接続されると前記所定のポイントがポイント記憶手段が記憶する配信可能ポイントに加算されること

を特徴とする請求項１５に記載の地図情報端末。

[請求項17]　通信ネットワークを介して、ユーザの編集要求情報を送信し、前記編集要求情報の応答としての配信データを受信する地図情報端末と、

前記通信ネットワークを介して、前記編集要求情報を受信し、前記編集要求情報に基づいて作成した差分地図データを含む前記配信データを前記地図情報端末に送信する地図配信サーバと、

からなる地図配信システムであって、

前記編集要求情報は、前記地図情報端末が保有する端末地図情報のバージョンを含むものであると共に、

前記配信データは、含まれた差分データの信頼度の程度を示す信頼ステータスをも含むこと

を特徴とする地図配信システム。

UNITED STATES PATENT AND TRADEMARK OFFICE

Commissioner for Patents
United States Patent and Trademark Office
P.O. Box 1450
Alexandria, VA 22313-1450
www.uspto.gov

BIRCH STEWART KOLASCH & BIRCH
PO BOX 747
FALLS CHURCH VA 22040-0747

MAILED
FEB 23 2012
OFFICE OF PETITIONS

In re Application of:	: DECISION ON REQUEST TO
Shimotani et al.	: PARTICIPATE IN THE PATENT
Application No. 13/145,318	: PROSECUTION HIGHWAY
Filed: July 19, 2011	: PROGRAM AND PETITION
Attorney Docket No. 1163-0922PUS1	: TO MAKE SPECIAL UNDER
	: 37 CFR 1.102(a)

This is a decision on the request to participate in the PCT Patent Prosecution Highway (PCT-PPH) pilot program and the petition under 37 CFR 1.102(a), filed on December 8, 2011 to make the above-identified application special.

The request and petition are **GRANTED**.

Discussion

A grantable request to participate in the PCT-PPH pilot program and petition to make special require:

(1) The U.S. application must have an eligible relationship to one or more PCT applications where the ISA or IPEA are the JPO, EPO, KIPO, NPI, NBPR, or USPTO;

(2) At least one claim in the PCT application has novelty, inventive step, and industrial applicability and must be free of any observations in Box VIII in the latest work product in the international stage or applicant must identify and explain why the claim(s) is/are not subject to the observation in Box VIII;

(3) Applicant must submit a copy of the claim(s) from the PCT application(s) that have novelty, inventive step, and industrial applicability along with an English translation thereof and a statement that the English translation is accurate, if the claims are not in the English language;

(4) All the claims in the U.S. application must sufficiently correspond or be amended to sufficiently correspond to the claim(s) that have novelty, inventive step, and industrial applicability in the PCT application(s);

(5) Examination of the U.S. application has not begun;

(6) Applicant must submit a copy of the latest international work product from the PCT application indicating that the claim(s) have novelty, inventive step, and industrial applicability along with an English translation thereof and a statement that the English translation is accurate if the latest international work product is not in the English language;

(7) Applicant must submit an IDS listing the documents cited by the PCT examiner in the international work product along with copies of documents except U.S. patents or U.S. patent application publications.

The request to participate in the PCT-PPH pilot program and petition comply with the above requirements. Accordingly, the above-identified application has been accorded "special" status.

Telephone inquiries concerning this decision should be directed to Joan Olszewski at 571-272-7751.

All other inquiries concerning the examination or status of the application is accessible in the PAIR system at http://www.uspto.gov/ebc.index.html.

This application will be forwarded to the examiner for action on the merits commensurate with this decision once this application's formality reviews have been completed.

/dab/
David Bucci
Petitions Examiner
Office of Petitions

UNITED STATES PATENT and TRADEMARK OFFICE

COMMISSIONER FOR PATENTS
UNITED STATES PATENT AND TRADEMARK OFFICE
P.O BOX 1450
ALEXANDRIA, VA 22313-1450
www.uspto.gov

WESTERMAN, HATTORI, DANIELS & ADRIAN, LLP
1250 CONNECTICUT AVENUE, NW
SUITE 700
WASHINGTON DC 20036

MAILED
NOV 09 2011
PCT LEGAL ADMINISTRATION

In re Application of :
Yong Ho SEOK :
Application No.: 13/145,331 :
PCT No.: PCT/KR2010/000292 :
Int. Filing Date: 18 January 2010 : DECISION
Priority Date: 20 January 2009 :
Attorney Docket No.: 2110-5027 :
For: METHOD AND APPARATUS FOR... :
AND STATION :

This decision is in response to applicant's "RESPONSE TO NOTIFICATION OF MISSING REQUIREMENTS," which is being treated as a petition under 37 CFR 1.182, filed on 07 September 2011 indicating that the executed declaration filed on 19 July 2011 contains the correct name of the inventor's name, which is Yong Ho. The petition fee under 37 CFR 1.182 of $400.00 has been charged to petitioner's Deposit Account No.: 50-2290.

BACKGROUND

On 19 July 2011, applicant filed in the United States Patent and Trademark Office (PTO) a Transmittal Letter (Form PTO-1390) accompanied by, *inter alia*, the basic national fee, and an executed declaration.

On 16 August 2011, the United States Designated/Elected Office (DO/EO/US) mailed a "NOTIFICATION OF MISSING REQUIREMENTS UNDER 35 U.S.C. 371 IN THE UNITED STATES DESIGNATED/ELECTED OFFICE (DO/EO/US)" (Form PCT/DO/EO/905) which informed applicant, inter alia, that an "Oath or Declaration of the inventors, in compliance with 37 CFR 1.497(a) and (b) In that it: On the international application, the first name of the inventor is listed as "Yongho." However, on the oath, the name is listed as "Yong" for the first name and "Ho" as the middle name. Please provide an explanation for the name discrepancy. The notification indicated that a oath or declaration must be submitted within two (2) months from the date of mailing or by 32 months from the priority date, whichever is later, in order to avoid abandonment of the national stage application.

On 07 September 2011, applicant submitted the current petition stating that the correct name and spelling as preferred by the inventor is **Yong Ho** as indicated in the submitted declaration, and not as published in the International application as Yongho.

DISCUSSION

The correct name of the sole inventor is as filed in the executed declaration on 19 July 2011 as **Yong Ho**, and not as published in the international application. Petitioner states that the inventor decided to change the spelling of his name after the PCT publication had issued. The inventor requested that the spelling of the first name be divided into two syllables and be spelled as **Yong Ho**. Accordingly, the correct name, **Yong Ho**, now appears in the declaration as filed on 19 July 2011 to the USPTO.

For the reasons above, the application may enter into national stage processing at this time.

DECISION

For the reasons above, the petition under 37 CFR 1.182 is **GRANTED** that the correct spelling of the inventor is **Yong Ho**.

This application is being returned to the United States Designated/Elected Office (DO/EO/US) for continued processing. The 35 USC 371(c)(1), (c)(2), and (c)(4) date of this application is **19 July 2011.**

Rafael Bacares
PCT Legal Examiner
PCT Legal Office
Telephone: (571) 272-3276
Facsimile: (571) 273-0459

UNITED STATES PATENT AND TRADEMARK OFFICE

Commissioner for Patents
United States Patent and Trademark Office
P.O. Box 1450
Alexandria, VA 22313-1450
www.uspto.gov

Whiteford, Taylor & Preston, LLp
Attn: Gregory M. Stone
Seven Saint Paul Street
Baltimore MD 21202-1626

MAILED
OCT 07 2011
PCT LEGAL ADMINISTRATION

In re Application of
ROSIN-ARBESFELD et al.
Application No.: 13/145,332
PCT No.: PCT/IL2010/000049
Int. Filing Date: 19 January 2010
Priority Date: 20 January 2009
Attorney Docket No.: 087041/00004
For: MIR-21 PROMOTER DRIVEN TARGETED CANCER THERAPY

DECISION ON PETITION UNDER 37 CFR 1.182

This decision is issued in response to applicant's "Petition to the Director under 37 CFR or 37 CFR 1.181 or 1.182" filed 03 October 2011 treated herein as a Petition under 37 CFR 1.182. The petition seeks to correct the bibliographic data for the national stage application papers filed 19 July 2011, so as to allow such materials to be treated as the U.S. national stage of PCT/IL2010/000049.

BACKGROUND

On 19 July 2011, applicant filed electronically a U.S. national stage application in the United States Designated/Elected Office (DO/EO/US). The submission included, inter alia, a Transmittal Letter to the United States Designated Office (DO/EO/US) Concerning a Submission under 35 U.S.C. 371 (Form PTO-1390) identifying international application number PCT/IL2010/000049.

Based on United States Patent and Trademark Office (USPTO) processing procedures, the application file was initiated in the USPTO PALM system as a U.S. national PCT/US2010/000049 the international application number set forth in the bibliographical data provided by applicant when filing the electronic application.

On 03 October 2011, applicant filed the petition considered herein.

DISCUSSION

Applicant confirms that the correct international application is PCT/IL2010/000049. An examination of the originally filed papers finds that the correct international application number was listed on the Transmittal Letter filed 19 July 2010. Applicant's present

submission included the required petition fee to correct applicant's clerical error. Accordingly, these materials satisfy the requirements for a grantable petition to correct applicant's error in the bibliographical data filed 19 July 2010 and to permit such materials to be treated as having been directed to international application PCT/IL2010/000049.

CONCLUSION

Applicant's petition under 37 CFR 1.182 is GRANTED.

As requested, the international application number, title of invention, and continuity data have been corrected and are now associated with PCT/IL2010/000049.

This application is being returned to the United States Designated/Elected Office for processing in accordance with this decision.

Anthony Smith
Attorney-Advisor
Office of PCT Legal Administration
Tel: (571) 272-3298
Fax: (571) 273-0459

UNITED STATES PATENT AND TRADEMARK OFFICE

Commissioner for Patents
United States Patent and Trademark Office
P.O. Box 1450
Alexandria, VA 22313-1450
www.uspto.gov

SHARP KABUSHIKI KAISHA
C/O KEATING & BENNETT LLP
1800 ALEXANDER BELL DRIVE
SUITE 200
RESTON VA 20191

MAILED

AUG 09 2011

OFFICE OF PETITIONS

In re Application of	:	
Kaori Ikuta	:	
Application No. 13/145,347	:	ON PETITION
Filed: July 20, 2011	:	
Attorney Docket No. 70404.787/ak	:	

This is in response to the petition under 37 CFR 1.182, filed July 20, 2011, to change inventor Kaori Yamamoto's name to Kaori Ikuta.

The petition is **DISMISSED** as moot.

The application was filed with a 37 CFR 1.63 declaration identifying the inventor as Kaori Ikuta. Accordingly, there was no need to consider the instant petition.

The application is being forwarded to the Office of Patent Application Processing for pre-examination processing.

Telephone inquiries regarding this decision should be directed to the undersigned at (571)272-3207.

Cliff Congo
Petitions Attorney
Office of Petitions

UNITED STATES PATENT AND TRADEMARK OFFICE

Commissioner for Patents
United States Patent and Trademark Office
P.O. Box 1450
Alexandria, VA 22313-1450
www.uspto.gov

WESTERMAN, HATTORI, DANIELS & ADRIAN, LLP
1250 CONNECTICUT AVENUE, NW
SUITE 700
WASHINGTON DC 20036

MAILED
JAN 25 2012
OFFICE OF PETITIONS

In re Application of
Uyama, Hiroshi
Application No.: 13/145,410
Filed: July 20, 2011
Attorney Docket No. 110893
For: SYSTEM WHICH MEDIATES PROVIDING OF MAP INFORMATION, SERVER WHICH MEDIATES PROVIDING OF MAP INFORMATION, AND METHOD FOR PROVIDING MAP INFORMATION

: DECISION ON REQUEST TO
: PARTICIPATE IN THE PATENT
: PROSECUTION HIGHWAY
: PROGRAM AND PETITION
: TO MAKE SPECIAL UNDER
: 37 CFR 1.102(a)

This is a decision on the request to participate in the Patent Prosecution Highway (PPH) program and the petition under 37 CFR 1.102(a), filed September 2, 2011, to make the above-identified application special.

The request and petition are **GRANTED**.

Discussion

A grantable request to participate in the PPH pilot program and petition to make special require:

1. The U.S. application is
   a. a Paris Convention application which either
      i. validly claims priority under 35 U.S.C. 119(a) and 37 CFR 1.55 to one or more applications filed in the JPO, or
      ii. validly claims priority to a PCT application that contains no priority claims, or
   b. a national stage application under the PCT (an application which entered the national stage in the U.S. from a PCT international application after compliance with 35 U.S.C. 371), which PCT application
      i. validly claims priority to an application filed in the JPO, or

ii. validly claims priority to a PCT application that contains no priority claims, or
iii. contains no priority claim, or

c. a so-called bypass application filed under 35 U.S.C. 111(a) which validly claims benefit under 35 U.S.C. 120 to a PCT application, which PCT application
i. validly claims priority to an application filed in the JPO, or
ii. validly claims priority to a PCT application that contains no priority claims, or
iii. contains no priority claim;

2. Applicant must submit a copy of:
a. The allowable/patentable claim(s) from the JPO application(s);
b. An English translation of the allowable/patentable claim(s) and
c. A statement that the English translation is accurate;

3. Applicant must:
a. Ensure all the claims in the U.S. application must sufficiently correspond or be amended to sufficiently correspond to the allowable/patentable claim(s) in the JPO application(s) and
b. Submit a claims correspondence table in English;

4. Examination of the U.S. application has not begun;

5. Applicant must submit:
a. Documentation of prior office action:
i. a copy of the office action(s) just prior to the "Decision to Grant a Patent" from each of the JPO application(s) containing the allowable/patentable claim(s) or
ii. if the allowable/patentable claims(s) are from a "Notification of Reasons for Refusal" then the Notification of Reasons for Refusal or
iii. if the JPO application is a first action allowance then no office action from the JPO is necessary should be indicated on the request/petition form;
b. An English language translation of the JPO Office action from (5)(a)(i)-(ii) above
c. A statement that the English translation is accurate;

6. Applicant must submit:
a. An IDS listing the documents cited by the JPO examiner in the JPO office action (unless already submitted in this application)
b. Copies of the documents except U.S. patents or U.S. patent application publications (unless already submitted in this application);

The request to participate in the PPH pilot program and petition comply with the above requirements. Accordingly, the above-identified application has been accorded "special" status.

Inquiries concerning this decision should be directed to Petitions Examiner Liana Walsh at (571) 272-3206.

All other inquiries concerning the examination or status of the application is accessible in the PAIR system at http://www.uspto.gov/ebc.index.html.

This application will be forwarded to the examiner for action on the merits commensurate with this decision once this application's formality reviews have been completed.

/dab/
David Bucci
Petitions Examiner
Office of Petitions

UNITED STATES PATENT AND TRADEMARK OFFICE

Commissioner for Patents
United States Patent and Trademark Office
P.O. Box 1450
Alexandria, VA 22313-1450
www.uspto.gov

HARNESS, DICKEY & PIERCE, P.L.C.
P.O. BOX 828
BLOOMFIELD HILLS MI 48303

MAILED
OCT 06 2011
OFFICE OF PETITIONS

In re Application of	:	
Stewart-Barnett	:	
Application No. 13/145,413	:	RESPONSE TO PETITION
Filed: July 20, 2011	:	
Attorney Docket No. 2340-000423/US/NP	:	

This is a response to the petition, filed July 21, 2011, which is treated as a petition under 37 CFR 1.59(b) to expunge information from the above identified application.

The petition is **dismissed**.

On July 20, 2011, two 8 page Preliminary Amendments were filed in the above identified application via EFS-Web with EFS ID numbers of 10559641 and 10561513. Petitioner requests the removal of the Preliminary Amendment filed under EFS ID number 10559641.

37 CFR 1.59 states in part:

> (a)(1) Information in an application will not be expunged, except as provided in paragraph (b) of this section or § 41.7(a) of this title.
> (2) Information forming part of the original disclosure (i.e., written specification including the claims, drawings, and any preliminary amendment specifically incorporated into an executed oath or declaration under §§ 1.63 and 1.175) will not be expunged from the application file.
> (b) An applicant may request that the Office expunge information, other than what is excluded by paragraph (a)(2) of this section, by filing a petition under this paragraph. Any petition to expunge information from an application must include the fee set forth in § 1.17(g) and **establish to the satisfaction of the Director that the expungement of the information is appropriate** in which case a notice granting the petition for expungement will be provided. [emphasis added]

However, the papers to be expunged are not clearly identified. Both Preliminary Amendments were submitted on the same day, are 8 pages, have the same title, and appear to be substantially the same. Although the file includes two Electronic Acknowledgement Receipts with the different EFS ID numbers, these receipts are separate papers from the Preliminary Amendments and do not serve to differentiate the Preliminary Amendments. Any renewed petition should clearly identify the papers to be removed.

Moreover, the standards for expunging information that is unintentionally submitted in an application, including the standards for establishing that the expungement of the information is appropriate, is discussed in MPEP section 724.05 II. This section states that a petition may be filed under 37 CFR 1.59(b), provided that:

> (A) the Office can effect such return prior to the issuance of any patent on the application in issue;
> (B) it is stated that the information submitted was unintentionally submitted and the failure to obtain its return would cause irreparable harm to the party who submitted the information or to the party in interest on whose behalf the information was submitted;
> (C) the information has not otherwise been made public;
> (D) there is a commitment on the part of the petitioner to retain such information for the period of any patent with regard to which such information is submitted;
> (E) it is established to the satisfaction of the Director that the information to be returned is not material information under 37 CFR 1.56; and
> (F) the petition fee as set forth in 37 CFR 1.17(g) is included.

Petitioner has not indicated that requirements B-D above are satisfied.

Telephone inquiries concerning this communication should be directed to the undersigned at (571) 272-6692.

Christopher Bottorff
Petitions Examiner
Office of Petitions

REQUEST FOR PARTICIPATION IN THE PATENT COOPERATION TREATY - PATENT PROSECUTION HIGHWAY (PCT-PPH) PILOT PROGRAM BETWEEN THE JAPAN PROPERTY OFFICE (JPO) AND THE USPTO

Application No.:	13/145,482	Filing Date:	July 20, 2011
Confirmation No.:	5580	Attorney Docket No.:	Q125434
First Named Inventor:	Kota IWAMOTO		
Title of the Invention:	IMAGE IDENTIFIER EXTRACTING APPARATUS		

THIS REQUEST FOR PARTICIPATION IN THE PCT-PPH PILOT PROGRAM ALONG WITH THE REQUIRED DOCUMENTS MUST BE SUBMITTED VIA EFS-WEB. INFORMATION REGARDING EFS-WEB IS AVAILABLE AT HTTP://WWW.USPTO.GOV/EBC/EFS_HELP.HTML.

APPLICANT HEREBY REQUESTS PARTICIPATION IN THE PCT-PPH PILOT PROGRAM AND PETITIONS TO MAKE THE ABOVE-IDENTIFIED APPLICATION SPECIAL UNDER THE PCT-PPH PILOT PROGRAM.

The above-identified application is (1) a national stage entry of the corresponding PCT application, or (2) a national stage entry of another PCT application which claims priority to the corresponding PCT application, or (3) a national application that claims domestic/ foreign priority to the corresponding PCT application, or (4) a national application which forms the basis for the priority claim in the corresponding PCT application, or (5) a continuing application of a U.S. application that satisfies one of (1) to (4) above, or (6) a U.S. application that claims domestic benefit to a U.S. provisional application which forms the basis for the priority claim in the corresponding PCT application.

The corresponding PCT application number(s) is/are: PCT/JP2010/000156

The international date of the corresponding PCT application(s) is/are: January 14, 2010

I. List of Required Documents:

a. A copy of the latest international work product (WO/ISA, WO/IPEA, or IPER) in the above–identified corresponding PCT application(s)

☑ Is attached.

☐ Is not attached because the document is already in the U.S. application.

b. A copy of all claims which were indicated as having novelty, inventive step and industrial applicability in the above-identified corresponding PCT application(s)

☑ Is attached.

☐ Is not attached because the document is already in the U.S. application.

c. English translations of the documents in a. and b. above are attached (if the documents are not in the English language). A statement that the English translation is accurate is attached for the document in b. above.

d. (1) An information disclosure statement listing the documents cited in international work products (ISR, WO/ISA, WO/IPEA, IPER) of the corresponding PCT application

☐ Is attached.

☑ Has already been filed in the above-identified U.S. application on July 20, 2011

(2) Copies of all documents (except for U.S. patents or U.S. patent application publications)

☐ Are attached.

☑ Have already been filed in the above-identified U.S. application on July 20, 2011

REQUEST FOR PARTICIPATION IN THE PATENT COOPERATION TREATY - PATENT PROSECUTION HIGHWAY (PCT-PPH) PILOT PROGRAM
BETWEEN THE JAPAN PROPERTY OFFICE (JPO) AND THE USPTO
(continued)

Application No.:	13/145,482
First Named Inventor:	Kota IWAMOTO and multiple dependency has been removed.

II. Claims Correspondence Table:

Claims in US Application	Patentable Claims in the corresponding PCT Application	Explanation regarding the correspondence
30	1	Both are the same except differences due to translations.
31	2	Both are the same except differences due to translations and the claim it depends from.
32	3	Both are the same except differences due to translations and the claim it depends from.
33	4	Both are the same except differences due to translations and the claim it depends from.
34	7	Both are the same except differences due to translations and the claim it depends from. And multiple dependency has been removed.
35	8	Both are the same except differences due to translations and the claim it depends from. And multiple dependency has been removed.
36	9	Both are the same except differences due to translations and the claim it depends from.
37	12	Both are the same except differences due to translations and the claim it depends from. And multiple dependency has been removed.
38	13	Both are the same except differences due to translations and the claim it depends from.
39	14	Both are the same, except differences due to the claim it depends from. And multiple dependency has been removed.
40	15	Both are the same except differences due to translations and the claim it depends from.
41	16	Both are the same, except differences due to the claim it depends from.
42	17	Both are the same, except differences due to the claim it depends from.
43	18	Both are the same, except differences due to the claim it depends from.
44	21	Both are the same, except differences due to the claim it depends from. And multiple dependency has been removed.
45	22	Both are the same, except differences due to the claim it depends from. And multiple dependency has been removed.
46	23	Both are the same, except differences due to the claim it depends from.
47	26	Both are the same, except differences due to the claim it depends from. And multiple dependency has been removed.
48	27	Both are the same, except differences due to the claim it depends from.
49	28	Both are the same, except differences due to the claim it depends from. And multiple dependency has been removed.

50	29	Both are the same except differences due to translations.

III. All the claims in the US application sufficiently correspond to the patentable claims in the corresponding PCT application.

IV. Payment of Fees:

☑ **The USPTO is directed and authorized to charge all required fees, except for the Issue Fee and the Publication Fee to Deposit Account No. 19-4880. Please also credit any overpayments to said Deposit Account.**

☐ **Credit Card.**

SEND ALL CORRESPONDENCE TO:
The address associated with Customer Number:

WASHINGTON OFFICE
23373
CUSTOMER NUMBER

Signature	/ Carl J. Pellegrini /	Date	August 11, 2011
Name (Print/Typed)	Carl J. Pellegrini	Registration Number	40,766

STATEMENT

I, Motohiro BABA of BABA International Patent Office, 2nd Fl., Ishii Bldg., 25-1, Sugawara-machi, Kawagoe-shi, Saitama, 350-0046, JAPAN hereby state that I am conversant in both the Japanese and English languages and certify to the best of my knowledge and belief that the attached is a true and accurate translation of claims of PCT Application No. PCT/JP2010/000156 as of the date of the latest international work product, a WO/IPER of February 1, 2011.

Signature: Motohiro Baba

Motohiro BABA

Dated: June 27, 2011

AMENDMENT

To: Examiner of the Patent Office

1 Identification of the International Application

PCT/JP2010/000156

2 Applicant

Name: NEC Corporation

Address: 7-1, Shiba 5-chome, Minato-ku, Tokyo 108-8001 Japan

Country of nationality: JAPAN

Country of residence: JAPAN

3 Agent

Name: BABA Motohiro

Address: 2nd Floor, Ishii Bldg., 25-1, Sugawara-machi, Kawagoe-shi, Saitama 350-0046 Japan

4 Item to be Amended: Claims

5 Subject Matter of Amendment

(1) The claim 1 on page 37 is amended as per the attached sheet(s).

(2) The claim 5 on page 38 is canceled.

(3) The claim 6 on page 38 is canceled.

(4) The claim 10 on page 38 to 39 is canceled.

(5) The claim 11 on page 39 is canceled.

(6) The claim 12 on page 39 is amended as per the attached sheet(s).

(7) The claim 14 on page 39 is amended as per the attached sheet(s).

(8) The claim 15 on page 39 to 40 is amended as per the attached sheet(s).

(9) The claim 19 on page 40 to 41 is canceled.

(10) The claim 20 on page 41 is canceled.

(11) The claim 24 on page 41 is canceled.

(12) The claim 25 on page 42 is canceled.

(13) The claim 26 on page 42 is amended as per the attached sheet(s).

(14) The claim 28 on page 42 is amended as per the attached sheet(s).

(15) The claim 29 on page 42 to 43 is amended as per the attached sheet(s).

6 List of Attached Documents

(1) Replacement sheets; page 37 to 42 of the claims

CLAIMS

1. (Amended) An image signature extraction device, comprising:

first feature extraction means for extracting, from an image, a first feature corresponding to each of dimensions of a feature vector, the first feature being a quantization value obtained by quantizing a physical quantity extracted from the image;

second feature extraction means for extracting, from the image, a second feature which is different from the first feature corresponding to each of dimensions of a feature vector;

feature type determination means for analyzing at least one of the image and the extracted first feature as a subject for analysis to determine whether or not the feature vector constituted of the extracted first features has effectiveness in discriminating an image, and if the feature vector has the effectiveness, determining the first feature to be a type of the feature used for each of the dimensions, while if the feature vector does not have the effectiveness, determining the second feature to be a type of the feature used for each of the dimensions in which the first feature is a predetermined quantization value and determining the first feature to be a type of the feature used for each of remaining dimensions; and

feature vector generation means for generating a feature vector of the image from the extracted first feature and the extracted second feature according to the determined type of the feature used for each of the dimensions.

2. The image signature extraction device, according to Claim 1, wherein

the feature type determination means analyzes the subject for analysis, calculates a degree of the effectiveness of the feature vector constituted of the extracted first features as an

effectiveness value, compares the effectiveness value with a threshold to determine whether or not the feature vector has the effectiveness, and determines the type of the feature used for each of the dimensions according to a determination result.

3. The image signature extraction device, according to Claim 2, wherein

the feature type determination means quantifies a discrimination capability of the feature vector constituted of the first features as the effectiveness value, the discrimination capability indicating a degree of discriminating a different image.

4. The image signature extraction device, according to Claim 2, wherein

the feature type determination means quantifies robustness of the feature vector constituted of the first features as the effectiveness value, the robustness indicating a degree that a value of a feature is not changed by various alteration processing applied to the image.

5. (Canceled)

6. (Canceled)

7. The image signature extraction device, according to Claim 2 or 3, wherein

if the first feature is a quantization value obtained by quantizing a physical quantity extracted from the image, the feature type determination means uses the number of dimensions having predetermined quantization values of the feature vector constituted of the first features, as

the effectiveness value.

8. The image signature extraction device, according to Claim 2 or 4, wherein

if the first feature is a quantization value obtained by quantizing a physical quantity extracted from the image, the feature type determination means calculates a numerical value indicating robustness of the feature vector constituted of the first features based on a value of robustness having been set beforehand for each quantization value, the value of robustness indicating a degree that the quantization value is not changed by various alteration processing applied to the image, and uses the calculated numerical value as the effectiveness value.

9. The image signature extraction device, according to Claim 8, wherein

the feature type determination means uses a mean value of values of robustness for the respective given quantization values as the effectiveness value.

10. (Canceled)

11. (Canceled)

12. (Amended) The image signature extraction device, according to Claim 4, 7, 8, or 9, wherein

the feature type determination means determines the number of dimensions for which the second feature is used, based on the effectiveness value.

13. The image signature extraction device, according to Claim 12, wherein

the feature type determination means has a priority table providing priority of dimensions for which the second features are used, and with reference to the priority table, selects dimensions for which the second features are used for the number of dimensions for which it is determined to use the second features, starting from a dimension of higher priority.

14. (Amended) The image signature extraction device, according to Claim 1, 2, 3, 4, 7, 8, 9, 11, 12, or 13, wherein

the first feature and the second feature are information relating to an edge of the image and information relating to color of the image.

15. (Amended) An image signature extraction method, comprising:

extracting, from an image, a first feature corresponding to each of dimensions of a feature vector, the first feature being a quantization value obtained by quantizing a physical quantity extracted from the image;

extracting, from the image, a second feature which is different from the first feature corresponding to each of dimensions of a feature vector;

analyzing at least one of the image and the extracted first feature as a subject for analysis to determine whether or not the feature vector constituted of the extracted first features has effectiveness in discriminating an image, and if the feature vector has the effectiveness, determining the first feature to be a type of the feature used for each of the dimensions, while if

the feature vector does not have the effectiveness, determining the second feature to be a type of the feature used for each of the dimensions in which the first feature is a predetermined quantization value and determines the first feature to be a type of the feature used for each of remaining dimensions; and

generating a feature vector of the image from the extracted first feature and the extracted second feature according to the determined type of the feature used for each of the dimensions.

16. The image signature extraction method, according to Claim 15, wherein

determining a type of the feature used for each of the dimensions includes analyzing the subject for analysis, calculating a degree of the effectiveness of the feature vector constituted of the extracted first features as an effectiveness value, comparing the effectiveness value with a threshold to determine whether or not the feature vector has the effectiveness, and determining the type of the feature used for each of the dimensions according to a determination result.

17. The image signature extraction method, according to Claim 16, wherein

determining a type of the feature used for each of the dimensions includes quantifying a discrimination capability of the feature vector constituted of the first features as the effectiveness value, the discrimination capability indicating a degree of discriminating a different image.

18. The image signature extraction method, according to Claim 16, wherein

determining a type of the feature used for each of the dimensions includes quantifying

robustness of the feature vector constituted of the first features as the effectiveness value, the robustness indicating a degree that a value of a feature is not changed by various alteration processing applied to the image.

19. (Canceled)

20. (Canceled)

21. The image signature extraction method, according to Claim 16 or 17, wherein determining a type of the feature used for each of the dimensions includes, if the first feature is a quantization value obtained by quantizing a physical quantity extracted from the image, using the number of dimensions having predetermined quantization values of the feature vector constituted of the first features, as the effectiveness value.

22. The image signature extraction method, according to Claim 16 or 18, wherein determining a type of the feature used for each of the dimensions includes, if the first feature is a quantization value obtained by quantizing a physical quantity extracted from the image, calculating a numerical value indicating robustness of the feature vector constituted of the first features based on a value of robustness having been set beforehand for each quantization value, the value of robustness indicating a degree that the quantization value is not changed by various alteration processing applied to the image, and using the calculated numerical value as the effectiveness value.

23. The image signature extraction method, according to Claim 22, wherein

determining a type of the feature used for each of the dimensions includes using a mean value of values of robustness for the respective given quantization values as the effectiveness value.

24. (Canceled)

25. (Canceled)

26. (Amended) The image signature extraction method, according to Claim 18, 21, 22, or 23, wherein

determining a type of the feature used for each of the dimensions includes determining the number of dimensions for which the second feature is used, based on the effectiveness value.

27. The image signature extraction method, according to Claim 26, wherein

a priority table defining priority of dimensions for which the second feature is used is provided, and

determining a type of the feature used for each of the dimensions includes, with reference to the priority table, selecting dimensions for which the second features are used for the number of dimensions for which it is determined to use the second features, starting from a dimension of higher priority.

28. (Amended) The image signature extraction method, according to Claim 15, 16, 17, 18, 21, 22, 23, 26, or 27, wherein the first feature and the second feature are information relating to an edge of the image and information relating to color of the image.

29. (Amended) A program for causing a computer to function as:

first feature extraction means for extracting, from an image, a first feature corresponding to each of dimensions of a feature vector, the first feature being a quantization value obtained by quantizing a physical quantity extracted from the image;

second feature extraction means for extracting, from the image, a second feature which is different from the first feature corresponding to each of dimensions of a feature vector;

feature type determination means for analyzing at least one of the image and the extracted first feature as a subject for analysis to determine whether or not the feature vector constituted of the extracted first features has effectiveness in discriminating an image, and if the feature vector has the effectiveness, determining the first feature to be a type of the feature used for each of the dimensions, while if the feature vector does not have the effectiveness, determining the second feature to be a type of the feature used for each of the dimensions in which the first feature is a predetermined quantization value and determining the first feature to be a type of the feature used for each of remaining dimensions; and

feature vector generation means for generating a feature vector of the image from the extracted first feature and the extracted second feature according to the determined type of the feature used for each of the dimensions.

手 続 補 正 書

（法第１１条の規定による補正）

特許庁審査官　殿

１　国際出願の表示　ＰＣＴ／ＪＰ２０１０／０００１５６

２　出 願 人

名　称　　日本電気株式会社

NEC Corporation

あて名　　〒108-8001　日本国東京都港区芝五丁目７番１号

7-1, Shiba 5-chome, Minato-ku, Tokyo 108-8001 Japan

国　籍　　日本国 JAPAN

住　所　　日本国 JAPAN

３　代 理 人

氏　名　　弁理士　馬　場　　資　博

BABA　Motohiro

あて名　　〒350-0046　日本国埼玉県川越市菅原町２５番地１　石井ビル２階

2nd Floor, Ishii Bldg., 25-1, Sugawara-machi, Kawagoe-shi,

Saitama 350-0046 Japan

４　補正の対象

請求の範囲

５　補正の内容

（１）請求の範囲第３７頁［請求項１］を別紙の通り補正する。

（２）請求の範囲第３８頁［請求項５］を削除する。

（３）請求の範囲第３８頁［請求項６］を削除する。

（４）請求の範囲第３８頁～第３９頁［請求項１０］を削除する。

（５）請求の範囲第３９頁［請求項１１］を削除する。

（６）請求の範囲第３９頁［請求項１２］を別紙の通り補正する。

（７）請求の範囲第３９頁［請求項１４］を別紙の通り補正する。

（８）請求の範囲第３９頁～第４０頁［請求項１５］を別紙の通り補正する。

（９）請求の範囲第４０頁～第４１頁［請求項１９］を削除する。

（１０）請求の範囲第４１頁［請求項２０］を削除する。

（１１）請求の範囲第４１頁［請求項２４］を削除する。

（１２）請求の範囲第４２頁［請求項２５］を削除する。

（１３）請求の範囲第４２頁［請求項２６］を別紙の通り補正する。

（１４）請求の範囲第４２頁［請求項２８］を別紙の通り補正する。

（１５）請求の範囲第４２頁～第４３頁［請求項２９］を別紙の通り補正する。

６　添付書類の目録

（１）請求の範囲第３７頁～第４２頁

請求の範囲

［請求項１］　（補正後）画像から、特徴ベクトルの各次元に対応して、前記画像から抽出した物理量を量子化した量子化値である第１の特徴量を抽出する第１の特徴量抽出手段と、

前記画像から、特徴ベクトルの各次元に対応して前記第１の特徴量とは異なる第２の特徴量を抽出する第２の特徴量抽出手段と、

前記画像および前記抽出された第１の特徴量の少なくとも一方を解析対象として解析して、前記抽出された第１の特徴量から構成される特徴ベクトルの画像を識別する有効性の有無を判定し、有効性が有る場合には各次元に用いる特徴量の種別を前記第１の特徴量と決定し、有効性が無い場合には、第１の特徴量が所定の量子化値となる次元についてはそれに用いる特徴量の種別を前記第２の特徴量とし、残りの次元に用いる特徴量の種別を前記第１の特徴量と決定する特徴量種別決定手段と、

前記決定した各次元に用いる特徴量の種別に従って、前記抽出された第１および第２の特徴量から前記画像の特徴ベクトルを生成する特徴ベクトル生成手段と、

を備えることを特徴とする画像識別子抽出装置。

［請求項２］　前記特徴量種別決定手段は、

前記解析対象を解析して、前記抽出された第１の特徴量から構成される特徴ベクトルの有効性の度合いを有効性数値として算出し、該有効性数値をある閾値と比較することにより前記特徴ベクトルの有効性の有無を判定し、該判定結果に従って各次元に用いる特徴量の種別を決定する

ことを特徴とする請求項１に記載の画像識別子抽出装置。

［請求項３］　前記特徴量種別決定手段は、前記有効性数値として、前記第１の特徴量から構成される特徴ベクトルの、異なる画像を識別できる度合いである識別能力を数値化する

ことを特徴とする請求項２に記載の画像識別子抽出装置。

［請求項４］　前記特徴量種別決定手段は、前記有効性数値として、前記第１の特徴量から構成される特徴ベクトルの、画像への各種改変処理によって特徴量の値が変化しない度合いである頑健性を数値化する

ことを特徴とする請求項２に記載の画像識別子抽出装置。

［請求項５］　（削除）

［請求項６］　（削除）

［請求項７］　前記特徴量種別決定手段は、前記第１の特徴量が前記画像から抽出した物理量を量子化した量子化値の場合に、前記第１の特徴量から構成される特徴ベクトルの、所定の量子化値である次元の数を、前記有効性数値として用いる

ことを特徴とする請求項２または３に記載の画像識別子抽出装置。

［請求項８］　前記特徴量種別決定手段は、前記第１の特徴量が前記画像から抽出した物理量を量子化した量子化値の場合に、予め定められた各量子化値ごとの画像への各種改変処理によって量子化値が変化しない度合いである頑健性の値に基づいて、前記第１の特徴量から構成される特徴ベクトルの頑健性を求め、前記有効性数値として用いる

ことを特徴とする請求項２または４に記載の画像識別子抽出装置。

［請求項９］　前記特徴量種別決定手段は、前記予め与えられる各量子化ごとの頑健性の値の平均値を、前記有効性数値として用いる

ことを特徴とする請求項８に記載の画像識別子抽出装置。

［請求項１０］　（削除）

［請求項１１］　（削除）

［請求項１２］　（補正後）前記特徴量種別決定手段は、前記有効性数値に基づいて、第２の特徴量を用いる次元の数を決定する

ことを特徴とする請求項４、７、８または９に記載の画像識別子抽出装置。

［請求項１３］　前記特徴量種別決定手段は、前記第２の特徴量を用いる次元の優先

順位を定める優先順位テーブルを有し、前記優先順位テーブルを参照して、より上位の優先順位の次元から前記第２の特徴量を用いると決定した次元数だけ、前記第２の特徴量を用いる次元を選択することを特徴とする請求項１２に記載の画像識別子抽出装置。

［請求項１４］　（補正後）前記第１の特徴量および前記第２の特徴量は、前記画像のエッジに関する情報と、前記画像の色に関する情報である

ことを特徴とする請求項１、２、３、４、７、８、９、１１、１２または１３に記載の画像識別子抽出装置。

［請求項１５］　（補正後）画像から、特徴ベクトルの各次元に対応して、前記画像から抽出した物理量を量子化した量子化値である第１の特徴量を抽出し、

前記画像から、特徴ベクトルの各次元に対応して前記第１の特徴量とは異なる第２の特徴量を抽出し、

前記画像および前記抽出された第１の特徴量の少なくとも一方を解析対象として解析して、前記抽出された第１の特徴量から構成される特徴ベクトルの画像を識別する有効性の有無を判定し、有効性が有る場合には各次元に用いる特徴量の種別を前記第１の特徴量と決定し、有効性が無い場合には、第１の特徴量が所定の量子化値となる次元についてはそれに用いる特徴量の種別を前記第２の特徴量とし、残りの次元に用いる特徴量の種別を前記第１の特徴量と決定し、

前記決定した各次元に用いる特徴量の種別に従って、前記抽出された第１および第２の特徴量から前記画像の特徴ベクトルを生成する

ことを特徴とする画像識別子抽出方法。

［請求項１６］　各次元に用いる特徴量の種別の決定では、

前記解析対象を解析して、前記抽出された第１の特徴量から構成される特徴ベクトルの有効性の度合いを有効性数値として算出し、該有効性数値をある閾値と比較することにより前記特徴ベクトルの有効性の有無を判定し、該判定結果に従って各次元に用いる特徴量の種別を

決定する

ことを特徴とする請求項１５に記載の画像識別子抽出方法。

［請求項１７］　各次元に用いる特徴量の種別の決定では、前記有効性数値として、前記第１の特徴量から構成される特徴ベクトルの、異なる画像を識別できる度合いである識別能力を数値化する

ことを特徴とする請求項１６に記載の画像識別子抽出方法。

［請求項１８］　各次元に用いる特徴量の種別の決定では、前記有効性数値として、前記第１の特徴量から構成される特徴ベクトルの、画像への各種改変処理によって特徴量の値が変化しない度合いである頑健性を数値化する

ことを特徴とする請求項１６に記載の画像識別子抽出方法。

［請求項１９］　（削除）

［請求項２０］　（削除）

［請求項２１］　各次元に用いる特徴量の種別の決定では、前記第１の特徴量が前記画像から抽出した物理量を量子化した量子化値の場合に、前記第１の特徴量から構成される特徴ベクトルの、所定の量子化値である次元の数を、前記有効性数値として用いる

ことを特徴とする請求項１６または１７に記載の画像識別子抽出方法。

［請求項２２］　各次元に用いる特徴量の種別の決定では、前記第１の特徴量が前記画像から抽出した物理量を量子化した量子化値の場合に、予め定められた各量子化値ごとの画像への各種改変処理によって量子化値が変化しない度合いである頑健性の値に基づいて、前記第１の特徴量から構成される特徴ベクトルの頑健性を求め、前記有効性数値として用いる

ことを特徴とする請求項１６または１８に記載の画像識別子抽出方法。

［請求項２３］　各次元に用いる特徴量の種別の決定では、前記予め与えられる各量子化ごとの頑健性の値の平均値を、前記有効性数値として用いる

ことを特徴とする請求項２２に記載の画像識別子抽出方法。

［請求項２４］　（削除）

［請求項２５］　（削除）

［請求項２６］　（補正後）各次元に用いる特徴量の種別の決定では、前記有効性数値に基づいて、第２の特徴量を用いる次元の数を決定する
ことを特徴とする請求項１８、２１、２２または２３に記載の画像識別子抽出方法。

［請求項２７］　各次元に用いる特徴量の種別の決定では、前記第２の特徴量を用いる次元の優先順位を定める優先順位テーブルを有し、前記優先順位テーブルを参照して、より上位の優先順位の次元から前記第２の特徴量を用いると決定した次元数だけ、前記第２の特徴量を用いる次元を選択することを特徴とする請求項２６に記載の画像識別子抽出方法。

［請求項２８］　（補正後）前記第１の特徴量および前記第２の特徴量は、前記画像のエッジに関する情報と、前記画像の色に関する情報である
ことを特徴とする請求項１５、１６、１７、１８、２１、２２、２３、２６または２７に記載の画像識別子抽出方法。

［請求項２９］　（補正後）コンピュータを、

画像から、特徴ベクトルの各次元に対応して、前記画像から抽出した物理量を量子化した量子化値である第１の特徴量を抽出する第１の特徴量抽出手段と、

前記画像から、特徴ベクトルの各次元に対応して前記第１の特徴量とは異なる第２の特徴量を抽出する第２の特徴量抽出手段と、

前記画像および前記抽出された第１の特徴量の少なくとも一方を解析対象として解析して、前記抽出された第１の特徴量から構成される特徴ベクトルの画像を識別する有効性の有無を判定し、有効性が有る場合には各次元に用いる特徴量の種別を前記第１の特徴量と決定し、有効性が無い場合には、第１の特徴量が所定の量子化値となる次元についてはそれに用いる特徴量の種別を前記第２の特徴量とし、残りの次元に用いる特徴量の種別を前記第１の特徴量と決定する特徴量種別決定手段と、

前記決定した各次元に用いる特徴量の種別に従って、前記抽出された第１および第２の特徴量から前記画像の特徴ベクトルを生成する特徴ベクトル生成手段と
して機能させるためのプログラム。

INTERNATIONAL SEARCH REPORT

International application No.
PCT/JP2010/000156

A. CLASSIFICATION OF SUBJECT MATTER
G06T7/00(2006.01)i

According to International Patent Classification (IPC) or to both national classification and IPC

B. FIELDS SEARCHED

Minimum documentation searched (classification system followed by classification symbols)
G06T7/00

Documentation searched other than minimum documentation to the extent that such documents are included in the fields searched

Jitsuyo Shinan Koho	1922-1996	Jitsuyo Shinan Toroku Koho	1996-2010
Kokai Jitsuyo Shinan Koho	1971-2010	Toroku Jitsuyo Shinan Koho	1994-2010

Electronic data base consulted during the international search (name of data base and, where practicable, search terms used)

C. DOCUMENTS CONSIDERED TO BE RELEVANT

Category*	Citation of document, with indication, where appropriate, of the relevant passages	Relevant to claim No.
X Y A	JP 2004-192555 A (Fuji Xerox Co., Ltd.), 08 July 2004 (08.07.2004), claim 4; paragraphs [0004] to [0008], [0048] to [0064] (Family: none)	1-3,6,15-17, 20,29 1-5,10, 14-19,24,28, 29 7-9,11-13, 21-23,25-27
Y	JP 2002-99916 A (Olympus Optical Co., Ltd.), 05 April 2002 (05.04.2002), paragraphs [0094] to [0096]; fig. 11, 13(#86) & US 2002/0143719 A1 & WO 2002/025591 A1 & AU 9025301 A & TW 569145 B & CN 1393002 A	1,10,15,24, 29

☒ Further documents are listed in the continuation of Box C. ☐ See patent family annex.

* Special categories of cited documents:
"A" document defining the general state of the art which is not considered to be of particular relevance
"E" earlier application or patent but published on or after the international filing date
"L" document which may throw doubts on priority claim(s) or which is cited to establish the publication date of another citation or other special reason (as specified)
"O" document referring to an oral disclosure, use, exhibition or other means
"P" document published prior to the international filing date but later than the priority date claimed

"T" later document published after the international filing date or priority date and not in conflict with the application but cited to understand the principle or theory underlying the invention
"X" document of particular relevance; the claimed invention cannot be considered novel or cannot be considered to involve an inventive step when the document is taken alone
"Y" document of particular relevance; the claimed invention cannot be considered to involve an inventive step when the document is combined with one or more other such documents, such combination being obvious to a person skilled in the art
"&" document member of the same patent family

Date of the actual completion of the international search 10 February, 2010 (10.02.10)	Date of mailing of the international search report 23 February, 2010 (23.02.10)
Name and mailing address of the ISA/ Japanese Patent Office Facsimile No.	Authorized officer Telephone No.

INTERNATIONAL SEARCH REPORT

International application No.
PCT/JP2010/000156

C (Continuation). DOCUMENTS CONSIDERED TO BE RELEVANT

Category*	Citation of document, with indication, where appropriate, of the relevant passages	Relevant to claim No.
Y	JP 2005-250972 A (NEC Corp.), 15 September 2005 (15.09.2005), claim 25; paragraph [0009] (Family: none)	4,14,18,28
Y	JP 2005-309535 A (Hitachi High-technologies Corp.), 04 November 2005 (04.11.2005), fig. 4; paragraph [0020] (Family: none)	5,19
A	JP 2005-100122 A (Fuji Photo Film Co., Ltd.), 14 April 2005 (14.04.2005), claim 1 (Family: none)	1-29

特許協力条約

ＰＣＴ

国際調査報告

（法８条、法施行規則第40、41条）
〔ＰＣＴ18条、ＰＣＴ規則43、44〕

出願人又は代理人の書類記号　N00050WO	今後の手続きについては、様式ＰＣＴ／ＩＳＡ／２２０及び下記５を参照すること。	
国際出願番号 ＰＣＴ／ＪＰ２０１０／０００１５６	国際出願日 (日.月.年)　１４．０１．２０１０	優先日 (日.月.年)　２３．０１．２００９
出願人（氏名又は名称） 日本電気株式会社		

国際調査機関が作成したこの国際調査報告を法施行規則第41条（ＰＣＴ18条）の規定に従い出願人に送付する。
この写しは国際事務局にも送付される。

この国際調査報告は、全部で　3　ページである。

☐ この調査報告に引用された先行技術文献の写しも添付されている。

１．国際調査報告の基礎
ａ．言語に関し、この国際調査は以下のものに基づき行った。
☑ 出願時の言語による国際出願
☐ 出願時の言語から国際調査のための言語である　＿＿＿＿＿＿　語に翻訳された、この国際出願の翻訳文（ＰＣＴ規則12.3(a)及び23.1(b)）

ｂ．☐ この国際調査報告は、ＰＣＴ規則91の規定により国際調査機関が認めた又は国際調査機関に通知された明らかな誤りの訂正を考慮して作成した（ＰＣＴ規則43.6の2(a)）。

ｃ．☐ この国際出願は、ヌクレオチド又はアミノ酸配列を含んでいる（第Ｉ欄参照）。

２．☐ 請求の範囲の一部の調査ができない（第Ⅱ欄参照）。

３．☐ 発明の単一性が欠如している（第Ⅲ欄参照）。

４．発明の名称は　☑ 出願人が提出したものを承認する。
☐ 次に示すように国際調査機関が作成した。

＿＿＿＿＿＿＿＿＿＿＿＿＿＿＿＿

５．要約は　☑ 出願人が提出したものを承認する。
☐ 第Ⅳ欄に示されているように、法施行規則第47条第１項（ＰＣＴ規則38.2）の規定により国際調査機関が作成した。出願人は、この国際調査報告の発送の日から１月以内にこの国際調査機関に意見を提出することができる。

６．図面に関して
ａ．要約書とともに公表される図は、
第　1　図とする。☑ 出願人が示したとおりである。
☐ 出願人は図を示さなかったので、国際調査機関が選択した。
☐ 本図は発明の特徴を一層よく表しているので、国際調査機関が選択した。

ｂ．☐ 要約とともに公表される図はない。

国際調査報告

国際出願番号　ＰＣＴ／ＪＰ２０１０／０００１５６

Ａ．　発明の属する分野の分類（国際特許分類（ＩＰＣ））

Int.Cl.　G06T7/00(2006.01)i

Ｂ．　調査を行った分野

調査を行った最小限資料（国際特許分類（ＩＰＣ））

Int.Cl.　G06T7/00

最小限資料以外の資料で調査を行った分野に含まれるもの

日本国実用新案公報	１９２２－１９９６年
日本国公開実用新案公報	１９７１－２０１０年
日本国実用新案登録公報	１９９６－２０１０年
日本国登録実用新案公報	１９９４－２０１０年

国際調査で使用した電子データベース（データベースの名称、調査に使用した用語）

Ｃ．　関連すると認められる文献

引用文献のカテゴリー＊	引用文献名　及び一部の箇所が関連するときは、その関連する箇所の表示	関連する請求項の番号
X	JP 2004-192555 A（富士ゼロックス株式会社）2004.07.08, 請求項４、【０００４－８】、【００４８－６４】（ファミリーなし）	1-3, 6, 15-17, 20, 29
Y		1-5, 10, 14-19, 24, 28, 29
A		7-9, 11-13, 21-23, 25-27

☑　Ｃ欄の続きにも文献が列挙されている。　☐　パテントファミリーに関する別紙を参照。

＊　引用文献のカテゴリー

「Ａ」特に関連のある文献ではなく、一般的技術水準を示すもの

「Ｅ」国際出願日前の出願または特許であるが、国際出願日以後に公表されたもの

「Ｌ」優先権主張に疑義を提起する文献又は他の文献の発行日若しくは他の特別な理由を確立するために引用する文献（理由を付す）

「Ｏ」口頭による開示、使用、展示等に言及する文献

「Ｐ」国際出願日前で、かつ優先権の主張の基礎となる出願の日の後に公表された文献

「Ｔ」国際出願日又は優先日後に公表された文献であって出願と矛盾するものではなく、発明の原理又は理論の理解のために引用するもの

「Ｘ」特に関連のある文献であって、当該文献のみで発明の新規性又は進歩性がないと考えられるもの

「Ｙ」特に関連のある文献であって、当該文献と他の１以上の文献との、当業者にとって自明である組合せによって進歩性がないと考えられるもの

「&」同一パテントファミリー文献

国際調査を完了した日 １０．０２．２０１０	国際調査報告の発送日 ２３．０２．２０１０
国際調査機関の名称及びあて先 日本国特許庁（ＩＳＡ／ＪＰ） 郵便番号１００－８９１５ 東京都千代田区霞が関三丁目４番３号	特許庁審査官（権限のある職員）　５Ｈ　４２３７ 松永　稔 電話番号　０３－３５８１－１１０１　内線　３５３１

Ｃ（続き）．　関連すると認められる文献

引用文献のカテゴリー＊	引用文献名　及び一部の箇所が関連するときは、その関連する箇所の表示	関連する請求項の番号
Y	JP 2002-99916 A（オリンパス光学工業株式会社）2002.04.05，段落【００９４－９６】、図１１，図１３（＃８６）　& US 2002/0143719 A1 & WO 2002/025591 A1 & AU 9025301 A & TW 569145 B & CN 1393002 A	1,10,15,24,29
Y	JP 2005-250972 A（日本電気株式会社）2005.09.15，請求項２５、【０００９】（ファミリーなし）	4,14,18,28
Y	JP 2005-309535 A（株式会社日立ハイテクノロジーズ）2005.11.04，図４，段落【００２０】（ファミリーなし）	5,19
A	JP 2005-100122 A（富士写真フイルム株式会社）2005.04.14，請求項１（ファミリーなし）	1-29

PATENT COOPERATION TREATY

From the
INTERNATIONAL SEARCHING AUTHORITY

To:

PCT

WRITTEN OPINION OF THE
INTERNATIONAL SEARCHING AUTHORITY

(PCT Rule 43*bis*.1)

Date of mailing *(day/month/year)*	23. 02. 2010
Applicant's or agent's file reference N00050WO	**FOR FURTHER ACTION** See paragraph 2 below

International application No.	International filing date *(day/month/year)*	Priority date *(day/month/year)*
PCT/JP2010/000156	14. 01. 2010	23. 01. 2009

International Patent Classification (IPC) or both national classification and IPC
Int.Cl. G06T7/00(2006.01)i

Applicant
NEC Corporation

1. This opinion contains indications relating to the following items:

- [X] Box No. I Basis of the opinion
- [ ] Box No. II Priority
- [ ] Box No. III Non-establishment of opinion with regard to novelty, inventive step and industrial applicability
- [ ] Box No. IV Lack of unity of invention
- [X] Box No. V Reasoned statement under Rule 43*bis*.1(a)(i) with regard to novelty, inventive step and industrial applicability; citations and explanations supporting such statement
- [ ] Box No. VI Certain documents cited
- [ ] Box No. VII Certain defects in the international application
- [X] Box No. VIII Certain observations on the international application

2. **FURTHER ACTION**

If a demand for international preliminary examination is made, this opinion will be considered to be a written opinion of the International Preliminary Examining Authority ("IPEA") except that this does not apply where the applicant chooses an Authority other than this one to be the IPEA and the chosen IPEA has notified the International Bureau under Rule 66.1*bis*(b) that written opinions of this International Searching Authority will not be so considered.

If this opinion is, as provided above, considered to be a written opinion of the IPEA, the applicant is invited to submit to the IPEA a written reply together, where appropriate, with amendments, before the expiration of 3 months from the date of mailing of Form PCT/ISA/220 or before the expiration of 22 months from the priority date, whichever expires later.

For further options, see Form PCT/ISA/220.

3. For further details, see notes to Form PCT/ISA/220.

Name and mailing address of the ISA/	Date of completion of this opinion	Authorized officer
Japanese Patent Office Facsimile No.	10. 02. 2010	Telephone No.

WRITTEN OPINION OF THE INTERNATIONAL SEARCHING AUTHORITY

International application No.
PCT/JP2010/000156

Box No. I Basis of this opinion

1. With regard to the **language**, this opinion has been established on the basis of:

   [X] the international application in the language in which it was filed.

   [ ] a translation of the international application into _____ which is the language of a translation furnished for the purposes of international search (Rules 12.3(a) and 23.1(b)).

2. [ ] This opinion has been established taking into account the **rectification of an obvious mistake** authorized by or notified to this Authority under Rule 91 (Rule 43*bis*.1(a))

3. With regard to any **nucleotide and/or amino acid sequence** disclosed in the international application, this opinion has been established on the basis of a sequence listing filed or furnished:

   a. (means)

   [ ] on paper

   [ ] in electronic form

   b. (time)

   [ ] in the international application as filed

   [ ] together with the international application in electronic form

   [ ] subsequently to this Authority for the purposes of search

4. [ ] In addition, in the case that more than one version or copy of a sequence listing has been filed or furnished, the required statements that the information in the subsequent or additional copies is identical to that in the application as filed or does not go beyond the application as filed, as appropriate, were furnished.

5. Additional comments:

WRITTEN OPINION OF THE INTERNATIONAL SEARCHING AUTHORITY

International application No.
PCT/JP2010/000156

Box No. II Priority

1. ☐ The validity of the priority claim has not been considered because the International Searching Authority does not have in its possession a copy of the earlier application whose priority has been claimed or, where required, a translation of that earlier application. This opinion has nevertheless been established on the assumption that the relevant date (Rules 43*bis*.1 and 64.1) is the claimed priority date.

2. ☐ This opinion has been established as if no priority had been claimed due to the fact that the priority claim has been found invalid (Rules 43*bis*.1 and 64.1). Thus for the purposes of this opinion, the international filing date indicated above is considered to be the relevant date.

3. Additional observations, if necessary:

WRITTEN OPINION OF THE INTERNATIONAL SEARCHING AUTHORITY

International application No.
PCT/JP2010/000156

Box No. III Non-establishment of opinion with regard to novelty, inventive step and industrial applicability

The questions whether the claimed invention appears to be novel, to involve an inventive step (to be non obvious), or to be industrially applicable have not been examined in respect of:

☐ the entire international application.

☐ claims Nos. _____

because:

☐ the said international application, or the said claims Nos. _____ relate to the following subject matter which does not require an international search *(specify)*:

☐ the description, claims or drawings *(indicate particular elements below)* or said claims Nos. _____ are so unclear that no meaningful opinion could be formed *(specify)*:

☐ the claims, or said claims Nos. _____ are so inadequately supported by the description that no meaningful opinion could be formed *(specify)*:

☐ no international search report has been established for said claims Nos. _____

☐ a meaningful opinion could not be formed without the sequence listing; the applicant did not, within the prescribed time limit:

- ☐ furnish a sequence listing on paper complying with the standard provided for in Annex C of the Administrative Instructions, and such listing was not available to the International Searching Authority in a form and manner acceptable to it.
- ☐ furnish a sequence listing in electronic form complying with the standard provided for in Annex C of the Administrative Instructions, and such listing was not available to the International Searching Authority in a form and manner acceptable to it.
- ☐ pay the required late furnishing fee for the furnishing of a sequence listing in response to an invitation under Rule 13*ter*.1(a) or (b).

☐ See Supplemental Box for further details.

WRITTEN OPINION OF THE INTERNATIONAL SEARCHING AUTHORITY

International application No.
PCT/JP2010/000156

Box No. IV Lack of unity of invention

1. ☐ In response to the invitation (Form PCT/ISA/206) to pay additional fees the applicant has, within the applicable time limit:

   ☐ paid additional fees.

   ☐ paid additional fees under protest and, where applicable, the protest fee.

   ☐ paid additional fees under protest but the applicable protest fee was not paid.

   ☐ not paid additional fees.

2. ☐ This Authority found that the requirement of unity of invention is not complied with and chose not to invite the applicant to pay additional fees.

3. This Authority considers that the requirement of unity of invention in accordance with Rule 13.1, 13.2 and 13.3 is

   ☐ complied with.

   ☐ not complied with for the following reasons:

4. Consequently, this opinion has been established in respect of the following parts of the international application:

   ☐ all parts.

   ☐ the parts relating to claims Nos. _____

WRITTEN OPINION OF THE INTERNATIONAL SEARCHING AUTHORITY

International application No.
PCT/JP2010/000156

Box No. V **Reasoned statement under Rule 43*bis*.1(a)(i) with regard to novelty, inventive step and industrial applicability; citations and explanations supporting such statement**

1. Statement

Novelty (N)	Claims	2-14, 16-28	YES
	Claims	1, 15, 29	NO
Inventive step (IS)	Claims	7-9, 11-13, 21-23, 25-27	YES
	Claims	1-6, 10, 14-20, 24, 28, 29	NO
Industrial applicability (IA)	Claims	1-29	YES
	Claims		NO

2. Citations and explanations:

D1: JP2004-192555A
D2: JP2002-99916A
D3: JP2005-250972A
D4: JP2005-309535A

Above-mentioned Document 1 discloses the art to use feature vector as additional information, so to speak, image signature for information management such as comparison, classification and search of image data. (See paragraphs [0004] -[0008])
When the meshed pattern region (i. j) is omitted, the feature obtained from each image data Bg (g=1, 2, 3…) can be expressed as Bgk (k=1~α). (See paragraph [0052])

As shown in Fig.5, feature vector obtained by combining each feature described in paragraph [0062] sequentially can be expressed as V=Bg1, Bg2…Bgα, (Bg1, Bg2), (Bg1, Bg3)….
Among the above-mentioned feature vectors V, a certain feature vector Bg1 can be considered as "first feature vector" extracted from images corresponding to each dimension of vectors.
In addition, among the above-mentioned feature vectors V, another feature vector Bg2, being different from the above-described certain vector, can be considered as "second feature vector" which is different from the first feature vector extracted from images corresponding to each dimension of vectors.

Paragraph [0063] discloses the process for "selecting feature vector as reference feature vector so as to have a small distance of vectors between each of reference image data as well as to have a large distance of vectors between reference image data and other targeted image data for search".
For example, when the feature vector Bg1 is selected as the reference feature vector between Bg1 and Bg2, it is possible to say the processes that "first features as a subject for analysis to determine whether or not the feature vector constituted of the extracted first features has effectiveness in discriminating an image, and if the feature vector has the effectiveness, determining the first features to be the type of the features used for the respective dimensions," and "generating a feature vector of the image from the extracted first features and the extracted second features, according to the determined type of the features used for the respective dimensions." are performed.

Besides, when the feature vector Bg2 is selected as the reference feature vector between Bg1 and Bg2, it is possible to say the processes that "if the feature vector does not have the effectiveness, determining the second feature to be the type of the features used for the respective dimensions," and "generating a feature vector of the image from the extracted first features and the extracted second features, according to the determined type of the features used for the respective dimensions." are performed.

WRITTEN OPINION OF THE INTERNATIONAL SEARCHING AUTHORITY

International application No.
PCT/JP2010/000156

Box No. VI Certain documents cited

1. Certain published documents (Rules 43*bis*.1 and 70.10)

Application No. Patent No.	Publication date *(day/month/year)*	Filing date *(day/month/year)*	Priority date (valid claim) *(day/month/year)*

2. Non-written disclosures (Rules 43*bis*.1 and 70.9)

Kind of non-written disclosure	Date of non-written disclosure *(day/month/year)*	Date of written disclosure referring to non-written disclosure *(day/month/year)*

WRITTEN OPINION OF THE INTERNATIONAL SEARCHING AUTHORITY

International application No.
PCT/JP2010/000156

Box No. VII Certain defects in the international application

The following defects in the form or contents of the international application have been noted:

WRITTEN OPINION OF THE INTERNATIONAL SEARCHING AUTHORITY

International application No.
PCT/JP2010/000156

Box No. VIII Certain observations on the international application

The following observations on the clarity of the claims, description, and drawings or on the question whether the claims are fully supported by the description, are made:

1. It is understandable that estimating probability density distribution of occurrence probability of the feature vector constituted of predetermined feature is possible. (See paragraph [0046] of this application.)
However, it is unclear how to define the effectiveness value because "a probability of occurrence of the feature vector constituted of the first features" disclosed in Claims 5 and 19 of this application is unclear to mean what probability of occurrence and defining of effectiveness value is also unclear.

2. It can understand about "a value of similarity between the first feature vector constituted of the first features " and "a feature vector constituted of first features extracted from a frequently appearing image pattern" disclosed in paragraph [0049] of this application.
However, it is unclear "a first feature vector extracted from an image pattern which appears frequently" disclosed in Claims 6 and 20 of this application is constituted of what kind of feature.
In addition, it is unclear "the feature vector constituted of the first features" disclosed in Claims 6 and 20 of this application is extracted from what kind of image.
Therefore, it is unclear how to define a value of similarity and an effectiveness value disclosed in Claims 6 and 20 of this application.

Supplemental Box

In case **the space in any of the preceding boxes is not sufficient.**
Continuation of: Box No. V

The disclosures of present invention in Claims 1, 15 and 29 of this application except "feature vector constituted of plurality dimension" and "if the feature vector does not have the effectiveness, determining the second feature to be a type of the feature used for each of at least part of the dimensions and determining the first feature to be a type of the feature used for each of remaining dimensions" are disclosed by Document 1 and have not a novelty and inventive step.

Claims 1, 10, 15, 24, 29
"Determining different feature to be a type of the feature used for each of at least part of the dimensions and determining certain feature to be a type of the feature used for each of remaining dimensions" for obtaining an effective combination of the features are disclosed in paragraphs [0094]-[0096] of above-mentioned Document 2 as "replacing or partly changing elements of feature information to be used". It is an art of common knowledge and obvious to a person having ordinary skill in the art. Therefore, present invention disclosed in Claims 1, 15 and 29 have not an inventive step.

Claims 2, 3, 16, 17
Determining whether or not being in a certain condition by using comparing the quantified certain condition with threshold is an art of common knowledge and obvious to a person having ordinary skill in the art. Therefore, "selecting an effective feature vector from plurality data to distinguish selected image data group as reference image data from not-selected data group as targeted image data for search" disclosed in paragraph [0063] of Document 1 is equivalent to "calculating a degree of the effectiveness of the feature vector constituted of specified features as an effectiveness value, comparing the effectiveness value with a threshold to determine whether or not the feature vector has the effectiveness".
Therefore, present invention disclosed in Claims 2, 3, 16 and 17 have not an inventive step.

Claims 4 and 18
There is no particular difficulty for a person having ordinary skill in the art to apply the art disclosed in Document 1 to the art disclosed in the paragraph [0009] of Document 3 which is concerning the determination of value of similarity between the processed image and original image .
In this case, it is obvious for a person having ordinary skill in the art that the effectiveness of value is the robustness indicating a degree that a value of a feature is not changed by various alteration processing applied to the image.Therefore, present invention disclosed in Claims 4 and 18 have not an inventive step.

Claims 5 and 19
As shown in paragraph [0020] and Fig. 4 in the above-mentioned Document 4, determining effectiveness of feature by using a probability of occurrence of the feature vector is an art of common knowledge and obvious to a person having ordinary skill in the art.
Therefore, present invention disclosed in Claims 5 and 19 have not an inventive step.

Supplemental Box

In case **the space in any of the preceding boxes is not sufficient.**
Continuation of: Box No. V

Claims 6 and 20

"Distance between feature vector of information group having common attribute and feature vector of information group not having common attribute" disclosed in Claim 4 of Document 1 is equivalent to "a value of similarity between the feature vector constituted of the first features and a first feature vector extracted from an image pattern which appears frequently".

Therefore, present invention disclosed in Claims 6 and 20 have not an inventive step.

Claims 14 and 28

"Chroma", information of color of image, is used as feature in the disclosure of paragraph [0048] of Document 1. For a person having ordinary skill in the art, using information of image edge as feature in addition to information of color is an art of common knowledge which will be adopted as appropriate. (See Claim 25 of Document 3)

Therefore, present invention disclosed in Claims 14 and 28 have not an inventive step.

特許協力条約

発信人　日本国特許庁（国際調査機関）

BABA PATENT OFFICE RECEIPT '10.2.24 受付 馬場国際特許事務所

代理人
馬場資博
様

あて名
〒350-0046
日本国埼玉県川越市菅原町２５番地１　石井ビル２階

ＰＣＴ
国際調査機関の見解書
（法施行規則第 40 条の 2）
〔ＰＣＴ規則 43 の 2.1〕

発送日 （日.月.年）	２３．０２．２０１０
出願人又は代理人 の書類記号　N00050WO	今後の手続きについては、下記２を参照すること。

国際出願番号	国際出願日	優先日
ＰＣＴ／ＪＰ２０１０／０００１５６	（日.月.年）　１４．０１．２０１０	（日.月.年）　２３．０１．２００９

国際特許分類（ＩＰＣ）Int.Cl. G06T7/00(2006.01)i

出願人（氏名又は名称）
日本電気株式会社

１．この見解書は次の内容を含む。

- ☑ 第Ｉ欄　見解の基礎
- ☐ 第II欄　優先権
- ☐ 第III欄　新規性、進歩性又は産業上の利用可能性についての見解の不作成
- ☐ 第IV欄　発明の単一性の欠如
- ☑ 第Ｖ欄　ＰＣＴ規則 43 の 2.1(a)(i)に規定する新規性、進歩性又は産業上の利用可能性についての見解、それを裏付けるための文献及び説明
- ☐ 第VI欄　ある種の引用文献
- ☐ 第VII欄　国際出願の不備
- ☑ 第VIII欄　国際出願に対する意見

２．今後の手続き
国際予備審査の請求がされた場合は、出願人がこの国際調査機関とは異なる国際予備審査機関を選択し、かつ、その国際予備審査機関がＰＣＴ規則 66.1 の 2(b)の規定に基づいて国際調査機関の見解書を国際予備審査機関の見解書とみなさない旨を国際事務局に通知していた場合を除いて、この見解書は国際予備審査機関の最初の見解書とみなされる。

この見解書が上記のように国際予備審査機関の見解書とみなされる場合、様式ＰＣＴ／ＩＳＡ／２２０を送付した日から３月又は優先日から２２月のうちいずれか遅く満了する期限が経過するまでに、出願人は国際予備審査機関に、適当な場合は補正書とともに、答弁書を提出することができる。

さらなる選択肢は、様式ＰＣＴ／ＩＳＡ／２２０を参照すること。

３．さらなる詳細は、様式ＰＣＴ／ＩＳＡ／２２０の備考を参照すること。

見解書を作成した日
１０．０２．２０１０

名称及びあて先 日本国特許庁（ＩＳＡ／ＪＰ） 郵便番号１００－８９１５ 東京都千代田区霞が関三丁目４番３号	特許庁審査官（権限のある職員）　５Ｈ　４２３７ 松永　稔 電話番号　０３－３５８１－１１０１　内線　３５３１

国際調査機関の見解書

国際出願番号　ＰＣＴ／ＪＰ２０１０／０００１５６

第Ｉ欄　見解の基礎

1．言語に関し、この見解書は以下のものに基づき作成した。

☑ 出願時の言語による国際出願

☐ 出願時の言語から国際調査のための言語である ＿＿＿＿＿＿ 語に翻訳された、この国際出願の翻訳文（ＰＣＴ規則12.3(a)及び23.1(b)）

2．☐ この見解書は、ＰＣＴ規則 91 の規定により国際調査機関が認めた又は国際調査機関に通知された明らかな誤りの訂正を考慮して作成した（ＰＣＴ規則 43 の 2.1(b)）。

3．この国際出願で開示されたヌクレオチド又はアミノ酸配列に関して、以下に基づき見解書を作成した。

a．タイプ　☐ 配列表

☐ 配列表に関連するテーブル

b．フォーマット　☐ 紙形式

☐ 電子形式

c．提出時期　☐ 出願時の国際出願に含まれていたもの

☐ この国際出願と共に電子形式により提出されたもの

☐ 出願後に、調査のために、この国際調査機関に提出されたもの

4．☐ さらに、配列表又は配列表に関連するテーブルを提出した場合に、出願後に提出した配列若しくは追加して提出した配列が出願時に提出した配列と同一である旨、又は、出願時の開示を超える事項を含まない旨の陳述書の提出があった。

5．補足意見：

国際調査機関の見解書

国際出願番号　ＰＣＴ／ＪＰ２０１０／０００１５６

第Ｖ欄　新規性、進歩性又は産業上の利用可能性についてのＰＣＴ規則43の2.1(a)(i)に定める見解、それを裏付ける文献及び説明

1.　見解

新規性（N）	請求項	2-14, 16-28	有
	請求項	1, 15, 29	無
進歩性（ＩＳ）	請求項	7-9, 11-13, 21-23, 25-27	有
	請求項	1-6, 10, 14-20, 24, 28, 29	無
産業上の利用可能性（ＩＡ）	請求項	1-29	有
	請求項		無

2.　文献及び説明

D1: JP 2004-192555 A
D2: JP 2002-99916 A
D3: JP 2005-250972 A
D4: JP 2005-309535 A

上記文献D1には、画像データを比較・分類・検索など、情報管理する際の画像識別子といえる付加情報として特徴量ベクトルを用いる技術（段落【０００４－０００８】）が記載されている。

メッシュ区画(i, j)を省略すると、各画像データ Bg(g=1, 2, 3・・・)から得られる特徴量はBgk（k=1～α）と表せる。(段落【００５２】)

段落【００６２】に記載された各特徴量を順次組み合わせて得られる特徴量ベクトルは、図５に示されるようにV＝Bg1, Bg2...Bgα, (Bg1, Bg2), (Bg1, Bg3)...と表せる。

上記特徴量ベクトルVのうち、ある１つの特徴量ベクトルBg1は、画像から、特徴ベクトルの各次元に対応して抽出された「第１の特徴量」といえ、また、上記ある１つの特徴量ベクトルとは異なる特徴量ベクトルBg2は、画像から、特徴ベクトルの各次元に対応して抽出された第１の特徴量とは異なる「第２の特徴量」といえる。

段落【００６３】に記載された「基準画像データ間においてベクトル間距離が小さく、基準画像データ群と他の検索対象画像データ群とのベクトル間距離が大きくなる特徴量ベクトルを基準特徴量ベクトルとして選択する」処理において、例えば、特徴量ベクトルBg1, Bg2から特徴量ベクトルBg1が基準特徴量ベクトルとして選択される場合の当該処理は、「第１の特徴量を解析対象として解析して、抽出された第１の特徴量から構成される特徴ベクトルの画像を識別する有効性の有無を判定し、有効性がある場合には各次元に用いる特徴量の種別を前記第１の特徴量と決定し」「決定した各次元に用いる特徴量の種別に従って、抽出された第１および第２の特徴量から画像の特徴ベクトルを生成する」処理といえる。

また、例えば、特徴量ベクトルBg1, Bg2から特徴量ベクトルBg2が基準特徴量ベクトルとして選択される場合の当該処理は、「有効性が無い場合には各次元に用いる特徴量の種別を第２の特徴量と決定し」、「決定した各次元に用いる特徴量の種別に従って、抽出された第１および第２の特徴量から画像の特徴ベクトルを生成する」する処理といえる。

第Ⅷ欄　国際出願に対する意見

請求の範囲、明細書及び図面の明瞭性又は請求の範囲の明細書による十分な裏付についての意見を次に示す。

１．　明細書の段落［００４６］に記載されたように所定の特徴量から構成される特徴ベクトルの生起確率の分布が推定し得ることは理解できるが、請求項５、１９記載の「第１の特徴量から構成される特徴ベクトルの生起確率」とは、具体的に何が生起する確率を意味するのか明らかでなく、有効性数値がどのように定義されるのか明りょうとはいえない。

２．　明細書の段落［００４９］に記載された、頻出する画像パターンから抽出した「第１の特徴量で構成される」特徴ベクトルとの類似度」については理解できるが、請求項６、２０に記載された「頻出する画像パターンから抽出された第１の特徴ベクトル」とは、どのような特徴量により構成された特徴ベクトルを意味しているのか明らかでない。

また、請求項６、２０に記載された第１の特徴量から構成される特徴ベクトルとは、どのような画像から抽出される特徴ベクトルを意味しているのか明らかでない。

したがって、請求項６、２０に記載された類似度、有効性数値がどのように定義されるのか明りょうとはいえない。

補充欄

いずれかの欄の大きさが足りない場合

第 V 欄の続き

してみると、請求項１、１５，２９記載の発明において、特徴ベクトルが複数の次元で構成され、「有効性が無い場合には一部の次元に用いる特徴量の種別を第２の特徴量として、残りの次元に用いる特徴量の種別を第１の特徴量と決定する」以外の部分は、文献D1に開示されており、新規性、進歩性は見いだせない。

請求項１、１０，１５，２４，２９
有効な特徴量の組合せを求める際に、一部の次元に用いる特徴量を異なる特徴量とし、残りの次元に用いる特徴量をそのまま用いることは、上記文献D2の段落【００９４－９６】に「利用特徴量情報要素の一部交換又は置換処理」として記載されているように当業者が容易に採用し得る公知技術である。
したがって、請求項１、１５，２９記載の発明には、進歩性がない。

請求項２、３、１６，１７
ある状態を判定する処理を、ある状態を数値化し閾値と比較することにより行うことは周知技術といえるから、文献D1の段落【００６３】記載の「複数の特徴量ベクトルのうち、基準画像データとして選ばれた画像データ群と選ばれなかった検索対象画像データ群とを区別するために有効な特徴量ベクトルを選び出す。」処理を、特定の特徴量から構成される特徴ベクトルの有効性の度合いを有効性数値として算出し、該有効性数値をある閾値と比較することにより特徴ベクトルの有効性の有無を判定することは、当業者が容易に想到し得る事項といえる。
したがって、請求項２、３、１６，１７記載の発明には、進歩性がない。

請求項４、１８
D1記載の技術を、上記文献D3の段落【０００９】に記載された加工処理が施された画像と元画像間の類似性を判定する技術として適用することは、当業者が容易に想到し得る事項といえ、適用した場合の有効性が、画像への各種改変処理によって特徴量の値が変化しない度合いである頑健性といえることは当業者にとって明らかな事項である。
したがって、請求項４、１８記載の発明には、進歩性がない。

請求項５、１９
特徴量の有効性を生起確率で判定することは、上記文献D4の段落【００２０】、図４に示されているように、当業者が適宜採用し得る公知技術である。
したがって、請求項５、１９記載の発明には、進歩性がない。

補充欄

いずれかの欄の大きさが足りない場合

第 Ｖ 欄の続き

請求項６，２０

文献D1の請求項４に記載された「共通する属性を有する情報群の特徴量ベクトルと共通する属性を有さない情報群の特徴量ベクトルとのベクトル間距離」は、頻出する画像パターンから抽出された第１の特徴ベクトルとの類似度の値といえる。

したがって、請求項６，２０記載の発明には、進歩性がない。

請求項１４、２８

D1の段落【００４８】には、特徴量として画像の色に関する情報である「彩度」を用いる点が記載されている。

そして、色に関する情報とともに画像のエッジ関する情報を特徴量として用いる点については、文献D3の請求項２５に記載されているように当業者が必要に応じて適宜採用し得る公知技術である。

したがって、請求項１４、２８記載の発明には、進歩性がない。

PATENT COOPERATION TREATY

From the INTERNATIONAL SEARCHING AUTHORITY

To:

PCT

NOTIFICATION OF TRANSMITTAL OF THE INTERNATIONAL SEARCH REPORT AND THE WRITTEN OPINION OF THE INTERNATIONAL SEARCHING AUTHORITY, OR THE DECLARATION

(PCT Rule 44.1)

	Date of mailing *(day/month/year)* 23. 02. 2010
Applicant's or agent's file reference N00050WO	**FOR FURTHER ACTION** See paragraphs 1 and 4 below
International application No. PCT/JP2010/000156	International filing date *(day/month/year)* 14. 01. 2010
Applicant NEC Corporation	

1. [X] The applicant is hereby notified that the international search report and the written opinion of the International Searching Authority have been established and are transmitted herewith.

   Filing of amendments and statement under Article 19:
   The applicant is entitled, if he so wishes, to amend the claims of the international application (see Rule 46):

   When? The time limit for filing such amendments is normally two months from the date of transmittal of the international search report.

   Where? Directly to the International Bureau of WIPO, 34 chemin des Colombettes 1211 Geneva 20, Switzerland, Facsimile No.: +41 22 338 82 70

   For more detailed instructions, see *PCT Applicant's Guide*, International Phase, paragraphs 9.004 – 9.011.

2. [ ] The applicant is hereby notified that no international search report will be established and that the declaration under Article 17(2)(a) to that effect and the written opinion of the International Searching Authority are transmitted herewith.

3. [ ] **With regard to any protest** against payment of (an) additional fee(s) under Rule 40.2, the applicant is notified that:

   [ ] the protest together with the decision thereon has been transmitted to the International Bureau together with any request to forward the texts of both the protest and the decision thereon to the designated Offices.

   [ ] no decision has been made yet on the protest; the applicant will be notified as soon as a decision is made.

4. **Reminders**

   The applicant may submit comments on an informal basis on the written opinion of the International Searching Authority to the International Bureau. The International Bureau will send a copy of such comments to all designated Offices unless an international preliminary examination report has been or is to be established. Following the expiration of 30 months from the priority date, these comments will also be made available to the public.

   Shortly after the expiration of **18 months** from the priority date, the international application will be published by the International Bureau. If the applicant wishes to avoid or postpone publication, a notice of withdrawal of the international application, or of the priority claim, must reach the International Bureau before the completion of the technical preparations for international publication (Rules 90*bis*.1 and 90*bis*.3).

   Within **19 months** from the priority date, but only in respect of some designated Offices, a demand for international preliminary examination must be filed if the applicant wishes to postpone the entry into the national phase **until 30 months** from the priority date (in some Offices even later); otherwise, the applicant must, **within 20 months** from the priority date, perform the prescribed acts for entry into the national phase before those designated Offices.

   In respect of other designated Offices, the time limit of **30 months** (or later) will apply even if no demand is filed within 19 months.

   For details about the applicable time limits, Office by Office, see www.wipo.int/pct/en/texts/time_limits.html and the *PCT Applicant's Guide*, National Chapters.

Name and mailing address of the ISA/ Japanese Patent Office	Authorized officer
Facsimile No.	Telephone No.

特許協力条約

発信人　日本国特許庁（国際調査機関）

BABA PATENT OFFICE RECEIPT '10.2.24 受付 馬場国際特許事務所

代理人
馬場資博
様

あて名
〒350-0046
日本国埼玉県川越市菅原町２５番地１　石井ビル２階

PCT

国際調査報告及び国際調査機関の見解書
又は国際調査報告を作成しない旨の決定
の送付の通知書
（法施行規則第41条）
〔ＰＣＴ規則44.1〕

	発送日（日.月.年）　２３．０２．２０１０
出願人又は代理人の書類記号　N00050WO	今後の手続きについては、下記１及び４を参照。
国際出願番号　ＰＣＴ／ＪＰ２０１０／０００１５６	国際出願日（日.月.年）　１４．０１．２０１０
出願人（氏名又は名称） 日本電気株式会社	

1．☑ 国際調査報告及び国際調査機関の見解書が作成されたこと、及びこの送付書とともに送付することを、出願人に通知する。
ＰＣＴ19条の規定に基づく補正書及び説明書の提出
出願人は、国際出願の請求の範囲を補正することができる（ＰＣＴ規則46参照）。
いつ　補正書の提出期間は、通常国際調査報告の送付の日から２月である。
どこへ　直接次の場所へ　The International Bureau of WIPO
34, chemin des Colombettes
1211 Geneva 20, Switzerland
Facsimile No.: +41 22 338 82 70
詳細な手続については、添付用紙の備考を参照すること。

2．☐ 国際調査報告が作成されないこと、及び法第8条第2項（ＰＣＴ17条(2)(a)）の規定による国際調査報告を作成しない旨の決定及び国際調査機関の見解書をこの送付書とともに送付することを、出願人に通知する。

3．☐ 法施行規則第44条（ＰＣＴ規則40.2）に規定する追加手数料の納付に対する異議の申立てに関して、出願人に下記の点を通知する。
☐ 異議の申立てと当該異議についての決定を、その異議の申し立てと当該異議についての決定の両方を指定官庁へ送付することを求める出願人の請求とともに、国際事務局へ送付した。
☐ 当該異議についての決定は、まだ行われていない。決定されしだい出願人に通知する。

4．今後の手続：　出願人は次の点に注意すること。
優先日から１８月経過後、国際出願は国際事務局によりすみやかに国際公開される。出願人が公開の延期を望むときは、国際出願又は優先権の主張の取下げの通知がＰＣＴ規則90の2.1及び90の2.3にそれぞれ規定されているように、国際公開の事務的な準備が完了する前に国際事務局に到達しなければならない。
いくつかの指定官庁については、出願人が国内段階の開始を優先日から３０月まで（官庁によってはさらに遅くまで）延期することを望むときは、優先日から１９月以内に、国際予備審査の請求書が提出されなければならない。そうでなければ、出願人はそれらの指定官庁に対して優先日から２０月以内に、国内段階の開始のための所定の手続を取らなければならない。
その他の指定官庁については、１９月以内に国際予備審査の請求書が提出されない場合にも、３０月の（あるいはさらに遅い）期限が適用される。
様式PCT/IB/301の付属書類を参照。個々の指定官庁で適用される期限の詳細については、ＰＣＴ出願人の手引、第Ⅱ巻、国内段階およびＷＩＰＯインターネットサイトを参照。

名称及びあて名 日本国特許庁（ＩＳＡ／ＪＰ） 郵便番号１００－８９１５ 東京都千代田区霞が関三丁目４番３号	権限のある職員 特許庁長官 電話番号　０３－３５８１－１１０１　内線　３５３１	５Ｈ　４２３７

（添付用紙を参照）

様式ＰＣＴ／ＩＳＡ／２２０　（２００４年１月）

注　　意

1．国際調査報告の発送日から起算する条約第19条（1）及び規則46.1に従う国際事務局への補正期間に注意してください。

2．条約22条（2）に規定する期間に注意してください。

3．法律又は契約等の制限により、国際調査報告に記載した非特許文献の写しの一部又は全てが送付されない場合があります。

4．文献の写しの請求について

国際調査報告に記載した文献の複写

特許庁にこれらの引用文献の写しを請求することもできますが、独立行政法人工業所有権情報・研修館（特許庁庁舎２階）で公報類の閲覧・複写および公報以外の文献複写等の取り扱いをしています。

〔担当及び照会先〕

〒１００－００１３　東京都千代田区霞が関３丁目４番３号（特許庁庁舎２階）

独立行政法人工業所有権情報・研修館

【公 報 類】　閲覧部　ＴＥＬ　03－3581－1101　内線3811～2

【公報以外】　資料部　ＴＥＬ　03－3581－1101　内線3831～3

また、（財）日本特許情報機構でも取り扱いをしています。

これらの引用文献の複写を請求する場合は下記の点に注意してください。

〔申込方法〕

（１）特許（実用新案・意匠）公報については、下記の点を明記してください。

○特許・実用新案及び意匠の種類

○出願公告又は出願公開の年次及び番号（又は特許番号、登録番号）

○必要部数

（２）公報以外の文献の場合は、下記の点に注意してください。

○国際調査報告の写しを添付してください（返却します）。

〔申込み及び照会先〕

〒１３５－００１６　東京都江東区東陽４－１－７　佐藤ダイヤビルディング

財団法人　日本特許情報機構　情報業務部業務課

ＴＥＬ　０３－３５０８－２３１３

注意　特許庁に対して文献の写しの請求をすることができる期間は、国際出願日から７年です。

様式ＰＣＴ／ＩＳＡ／２２０の備考

この備考は、ＰＣＴ19条の規定に基づく補正書の提出に関する基本的な指示を与えるためのものである。この備考は特許協力条約並びにこの条約に基づく規則及び実施細則の規定に基づいている。この備考とそれらの規定とが相違する場合には、後者が適用される。詳細な情報については、ＷＩＰＯの出版物であるＰＣＴ出願人の手引も参照すること。

ＰＣＴ19条の規定に基づく補正書の提出に関する指示

出願人は、国際調査報告及び国際調査機関の見解書を受領した後、国際出願の請求の範囲を補正する機会が一回ある。しかし、国際出願のすべての部分（請求の範囲、明細書及び図面）が、国際予備審査の手続においても補正できるもので、例えば出願人が仮保護のために補正書を公開することを希望する場合又は国際公開前に請求の範囲を補正する別の理由がある場合を除き、通常ＰＣＴ19条の規定に基づく補正書を提出する必要はないことを強調しておく。さらに、仮保護は一部の国のみで与えられるだけであることも強調しておく（ＰＣＴ出願人の手引、附録Ｂ１及びＢ２参照）。

補正の対象となるもの

ＰＣＴ19条の規定により請求の範囲のみ補正することができる。
国際段階においてＰＣＴ34条の規定に基づく国際予備審査の手続きにおいて請求の範囲を（更に）補正することができる。
明細書及び図面は、ＰＣＴ34条の規定に基づく国際予備審査の手続においてのみ補正することができる。
国内段階に移行する際、ＰＣＴ28条（又はＰＣＴ41条）の規定により、国際出願のすべての部分を補正することができる。

いつ

国際調査報告の送付の日から２月又は優先日から１６月の内どちらか遅く満了するほうの期間内。しかし、その期間の満了後であっても国際公開の技術的な準備の完了前に国際事務局が補正を受領した場合には、その補正書は、期間内に受理されたものとみなすことを強調しておく（ＰＣＴ規則46.1）。

補正書を提出すべきところ

補正書は、国際事務局のみに提出でき、受理官庁又は国際調査機関には提出してはいけない（ＰＣＴ規則46.2）。
国際予備審査の請求書を提出した／する場合については、以下を参照すること。

どのように

１以上の請求の範囲の削除、１以上の新たな請求の範囲の追加、又は１以上の請求の範囲の記載の補正による。
差替え用紙は、補正の結果、出願当初の用紙と相違する請求の範囲の各用紙毎に提出する。
差替え用紙に記載されているすべての請求の範囲には、アラビア数字を付さなければならない。請求の範囲を削除する場合、その他の請求の範囲の番号を付け直す必要はない。請求の範囲の番号を付け直す場合には、連続番号で付け直さなければならない（ＰＣＴ実施細則第205号(b)）。
補正は国際公開の言語で行う。

補正書にどのような書類を添付しなければならないか

書簡（ＰＣＴ実施細則第205号(b)）

補正書には書簡を添付しなければならない。
書簡は国際出願及び補正された請求の範囲とともに公開されることはない。これを「ＰＣＴ19条(1)に規定する説明書」と混同してはならない（「ＰＣＴ19条(1)に規定する説明書」については、以下を参照）。
書簡は、英語又は仏語を選択しなければならない。ただし、国際出願の言語が英語の場合、書簡は英語で、仏語の場合、書簡は仏語で記載しなければならない。
書簡には、出願時の請求の範囲と補正された請求の範囲との相違について表示しなければならない。特に、国際出願に記載した各請求の範囲との関連で次の表示（２以上の請求の範囲についての同一の表示する場合は、まとめることができる。）をしなければならない。

(i) この請求の範囲は変更しない。
(ii) この請求の範囲は削除する。
(iii) この請求の範囲は追加である。
(iv) この請求の範囲は出願時の１以上の請求の範囲と差し替える。
(v) この請求の範囲は出願時の請求の範囲の分割の結果である。

次に、添付する書簡中での、補正についての説明の例を示す。

１．［請求の範囲の一部の補正によって請求の範囲の項数が４８から５１になった場合］：
“請求の範囲１－２９、３１、３２、３４、３５、３７－４８項は、同じ番号のもとに補正された請求の範囲と置き換えられた。請求の範囲３０、３３及び３６項は変更なし。新たに請求の範囲４９－５１項が追加された。”

２．［請求の範囲の全部の補正によって請求の範囲の項数が１５から１１になった場合］：
“請求の範囲１－１５項は、補正された請求の範囲１－１１項に置き換えられた。”

３．［原請求の範囲の項数が１４で、補正が一部の請求の範囲の削除と新たな請求の範囲の追加を含む場合］：
“請求の範囲１－６及び１４項は変更なし。請求の範囲７－１３は削除。新たに請求の範囲１５、１６及び１７項を追加。”又は
“請求の範囲７－１３は削除。新たに請求の範囲１５、１６及び１７項を追加。その他の全ての請求の範囲は変更なし。”

４．［各種の補正がある場合］：
“請求の範囲１－１０項は変更なし。請求の範囲１１－１３、１８及び１９項は削除。請求の範囲１４、１５及び１６項は補正された請求の範囲１４項に置き換えられた。請求の範囲１７項は補正された請求の範囲１５、１６及び１７項に分割された。新たに請求の範囲２０及び２１項が追加された。”

“ＰＣＴ19条(1)の規定に基づく説明書”（ＰＣＴ規則46.4）

補正書には、補正並びにその補正が明細書及び図面に与える影響についての説明書を提出することができる（明細書及び図面はＰＣＴ19条(1)の規定に基づいては補正できない）。

説明書は、国際出願及び補正された請求の範囲とともに公開される。

説明書は、国際公開の言語で作成しなければならない。

説明書は、簡潔でなければならず、英語の場合又は英語に翻訳した場合に５００語を越えてはならない。

説明書は、出願時の請求の範囲と補正された請求の範囲との相違を示す書簡と混同してはならない。説明書を、その書簡に代えることはできない。説明書は別紙で提出しなければならず、見出しを付すものとし、その見出しは“ＰＣＴ19条(1)の規定に基づく説明書”の語句を用いることが望ましい。

説明書には、国際調査報告又は国際調査報告に列記された文献との関連性に関して、これらを誹謗する意見を記載してはならない。国際調査報告に列記された特定の請求の範囲に関連する文献についての言及は、当該請求の範囲の補正に関してのみ行うことができる。

国際予備審査の請求書が提出されている場合

ＰＣＴ19条の規定に基づく補正書及び添付する説明書の提出の時に国際予備審査の請求書が既に提出されている場合には、出願人は、補正書（及び説明書）を国際事務局に提出すると同時にその写し及び必要な場合、その翻訳文を国際予備審査機関にも提出することが望ましい（ＰＣＴ規則55.3(a)、62.2の第１文を参照）。詳細は国際予備審査請求書（ＰＣＴ／ＩＰＥＡ／４０１）の注意書参照。

国際予備審査の請求がされた場合は、見解書を作成した国際調査機関が国際予備審査機関としては行動しないという特定の場合を除いて、国際調査機関の見解書は国際予備審査機関の見解書とみなされる。この場合、様式ＰＣＴ／ＩＳＡ／２２０の送付日から３月又は優先日から２２月のうちいずれか遅く満了する期限が経過するまでに、出願人は国際予備審査機関に、適当な場合は補正書とともに、答弁書を提出することができる（ＰＣＴ規則43の2.1(c)）。

国内段階に移行するための国際出願の翻訳に関して

国内段階に移行する際、ＰＣＴ19条の規定に基づいて補正された請求の範囲の翻訳を出願時の請求の範囲の翻訳の代わりに又は追加して、指定官庁／選択官庁に提出しなければならないこともあるので、出願人は注意されたい。

指定官庁／選択官庁の詳細な要求については、ＰＣＴ出願人の手引きの第Ⅱ巻を参照。

PATENT APPLICATION

IN THE UNITED STATES PATENT AND TRADEMARK OFFICE

In re application of

Kota IWAMOTO, et al.

Appln. No.: 13/145,482

Confirmation No.: 5580

Filed: July 20, 2011

For: IMAGE SIGNATURE EXTRACTION DEVICE

Docket No: Q125434

Group Art Unit: Not Yet Assigned

Examiner: Not Yet Assigned

TRANSMITTAL

Commissioner for Patents
P.O. Box 1450
Alexandria, VA 22313-1450
Sir:

On August 11, 2011, Applicants filed a Request for Participation in the Patent Cooperation Treaty - Patent Prosecution Highway (PPC-PPH) Pilot Program. After submitting the Modified PTO/SB/20PCT-JP form, Applicants discovered they had made two errors in the form. First, under the List of Required Documents section, applicants indicated they were submitting the latest work product when in fact they had already submitted the latest work product, an English translation of the IPRP, with their initial filing on July 20, 2011 and the English translated Written Opinion that was submitted with the PPH Request was not the latest work product. Secondly, in the claims Corresponding Table, Applicants identified claim 40 in the Claims in US Applications Section as being a dependent claim when in fact it is an independent claim.

Applicants have made the respective corrections and submit herewith a corrected Modified PTO/SB/20PCT-JP form for the Examiner's consideration.

The USPTO is directed and authorized to charge all required fees, except for the Issue Fee and the Publication Fee, to Deposit Account No. 19-4880. Please also credit any overpayments to said Deposit Account.

Respectfully submitted,

/ Carl J. Pellegrini /

Carl J. Pellegrini
Registration No. 40,766

SUGHRUE MION, PLLC
Telephone: (202) 293-7060
Facsimile: (202) 293-7860

WASHINGTON OFFICE
23373
CUSTOMER NUMBER

Date: September 8, 2011

REQUEST FOR PARTICIPATION IN THE PATENT COOPERATION TREATY - PATENT PROSECUTION HIGHWAY (PCT-PPH) PILOT PROGRAM BETWEEN THE JAPAN PROPERTY OFFICE (JPO) AND THE USPTO

Application No.:	13/145,482	Filing Date:	July 20, 2011
Confirmation No.:	5580	Attorney Docket No.:	Q125434
First Named Inventor:	Kota IWAMOTO		
Title of the Invention:	IMAGE IDENTIFIER EXTRACTING APPARATUS		

THIS REQUEST FOR PARTICIPATION IN THE PCT-PPH PILOT PROGRAM ALONG WITH THE REQUIRED DOCUMENTS MUST BE SUBMITTED VIA EFS-WEB. INFORMATION REGARDING EFS-WEB IS AVAILABLE AT HTTP://WWW.USPTO.GOV/EBC/EFS_HELP.HTML.

APPLICANT HEREBY REQUESTS PARTICIPATION IN THE PCT-PPH PILOT PROGRAM AND PETITIONS TO MAKE THE ABOVE-IDENTIFIED APPLICATION SPECIAL UNDER THE PCT-PPH PILOT PROGRAM.

The above-identified application is (1) a national stage entry of the corresponding PCT application, or (2) a national stage entry of another PCT application which claims priority to the corresponding PCT application, or (3) a national application that claims domestic/ foreign priority to the corresponding PCT application, or (4) a national application which forms the basis for the priority claim in the corresponding PCT application, or (5) a continuing application of a U.S. application that satisfies one of (1) to (4) above, or (6) a U.S. application that claims domestic benefit to a U.S. provisional application which forms the basis for the priority claim in the corresponding PCT application.

The corresponding PCT application number(s) is/are: PCT/JP2010/000156

The international date of the corresponding PCT application(s) is/are: January 14, 2010

I. List of Required Documents:

a. A copy of the latest international work product (WO/ISA, WO/IPEA, or IPER) in the above–identified corresponding PCT application(s)

☐ Is attached.

☑ Is not attached because the document is already in the U.S. application.

b. A copy of all claims which were indicated as having novelty, inventive step and industrial applicability in the above-identified corresponding PCT application(s)

☑ Is attached.

☐ Is not attached because the document is already in the U.S. application.

c. English translations of the documents in a. and b. above are attached (if the documents are not in the English language). A statement that the English translation is accurate is attached for the document in b. above.

d. (1) An information disclosure statement listing the documents cited in international work products (ISR, WO/ISA, WO/IPEA, IPER) of the corresponding PCT application

☐ Is attached.

☑ Has already been filed in the above-identified U.S. application on July 20, 2011

(2) Copies of all documents (except for U.S. patents or U.S. patent application publications)

☐ Are attached.

☑ Have already been filed in the above-identified U.S. application on July 20, 2011

REQUEST FOR PARTICIPATION IN THE PATENT COOPERATION TREATY - PATENT PROSECUTION HIGHWAY (PCT-PPH) PILOT PROGRAM

BETWEEN THE JAPAN PROPERTY OFFICE (JPO) AND THE USPTO

(continued)

Application No.:	13/145,482
First Named Inventor:	Kota IWAMOTO and multiple dependency has been removed.

II. Claims Correspondence Table:

Claims in US Application	Patentable Claims in the corresponding PCT Application	Explanation regarding the correspondence
30	1	Both are the same except differences due to translations.
31	2	Both are the same except differences due to translations and the claim it depends from.
32	3	Both are the same except differences due to translations and the claim it depends from.
33	4	Both are the same except differences due to translations and the claim it depends from.
34	7	Both are the same except differences due to translations and the claim it depends from. And multiple dependency has been removed.
35	8	Both are the same except differences due to translations and the claim it depends from. And multiple dependency has been removed.
36	9	Both are the same except differences due to translations and the claim it depends from.
37	12	Both are the same except differences due to translations and the claim it depends from. And multiple dependency has been removed.
38	13	Both are the same except differences due to translations and the claim it depends from.
39	14	Both are the same, except differences due to the claim it depends from. And multiple dependency has been removed.
40	15	Both are the same except differences due to translations.
41	16	Both are the same, except differences due to the claim it depends from.
42	17	Both are the same, except differences due to the claim it depends from.
43	18	Both are the same, except differences due to the claim it depends from.
44	21	Both are the same, except differences due to the claim it depends from. And multiple dependency has been removed.
45	22	Both are the same, except differences due to the claim it depends from. And multiple dependency has been removed.
46	23	Both are the same, except differences due to the claim it depends from.
47	26	Both are the same, except differences due to the claim it depends from. And multiple dependency has been removed.
48	27	Both are the same, except differences due to the claim it depends from.
49	28	Both are the same, except differences due to the claim it depends from. And multiple dependency has been removed.

50	29	Both are the same except differences due to translations.

III. All the claims in the US application sufficiently correspond to the patentable claims in the corresponding PCT application.

IV. Payment of Fees:

☑ **The USPTO is directed and authorized to charge all required fees, except for the Issue Fee and the Publication Fee to Deposit Account No. 19-4880. Please also credit any overpayments to said Deposit Account.**

☐ **Credit Card.**

SEND ALL CORRESPONDENCE TO:
The address associated with Customer Number:

WASHINGTON OFFICE
23373
CUSTOMER NUMBER

Signature	/ Carl J. Pellegrini /	Date	September 8, 2011
Name (Print/Typed)	Carl J. Pellegrini	Registration Number	40,766

STATEMENT

I, Motohiro BABA of BABA International Patent Office, 2nd Fl., Ishii Bldg., 25-1, Sugawara-machi, Kawagoe-shi, Saitama, 350-0046, JAPAN hereby state that I am conversant in both the Japanese and English languages and certify to the best of my knowledge and belief that the attached is a true and accurate translation of claims of PCT Application No. PCT/JP2010/000156 as of the date of the latest international work product, a WO/IPER of February 1, 2011.

Signature: Motohiro Baba

Motohiro BABA

Dated: June 27, 2011

AMENDMENT

To: Examiner of the Patent Office

1 Identification of the International Application

PCT/JP2010/000156

2 Applicant

Name: NEC Corporation

Address: 7-1, Shiba 5-chome, Minato-ku, Tokyo 108-8001 Japan

Country of nationality: JAPAN

Country of residence: JAPAN

3 Agent

Name: BABA Motohiro

Address: 2nd Floor, Ishii Bldg., 25-1, Sugawara-machi, Kawagoe-shi, Saitama 350-0046 Japan

4 Item to be Amended: Claims

5 Subject Matter of Amendment

(1) The claim 1 on page 37 is amended as per the attached sheet(s).

(2) The claim 5 on page 38 is canceled.

(3) The claim 6 on page 38 is canceled.

(4) The claim 10 on page 38 to 39 is canceled.

(5) The claim 11 on page 39 is canceled.

(6) The claim 12 on page 39 is amended as per the attached sheet(s).

(7) The claim 14 on page 39 is amended as per the attached sheet(s).

(8) The claim 15 on page 39 to 40 is amended as per the attached sheet(s).

(9) The claim 19 on page 40 to 41 is canceled.

(10) The claim 20 on page 41 is canceled.

(11) The claim 24 on page 41 is canceled.

(12) The claim 25 on page 42 is canceled.

(13) The claim 26 on page 42 is amended as per the attached sheet(s).

(14) The claim 28 on page 42 is amended as per the attached sheet(s).

(15) The claim 29 on page 42 to 43 is amended as per the attached sheet(s).

6 List of Attached Documents

(1) Replacement sheets; page 37 to 42 of the claims

CLAIMS

1. (Amended) An image signature extraction device, comprising:

first feature extraction means for extracting, from an image, a first feature corresponding to each of dimensions of a feature vector, the first feature being a quantization value obtained by quantizing a physical quantity extracted from the image;

second feature extraction means for extracting, from the image, a second feature which is different from the first feature corresponding to each of dimensions of a feature vector;

feature type determination means for analyzing at least one of the image and the extracted first feature as a subject for analysis to determine whether or not the feature vector constituted of the extracted first features has effectiveness in discriminating an image, and if the feature vector has the effectiveness, determining the first feature to be a type of the feature used for each of the dimensions, while if the feature vector does not have the effectiveness, determining the second feature to be a type of the feature used for each of the dimensions in which the first feature is a predetermined quantization value and determining the first feature to be a type of the feature used for each of remaining dimensions; and

feature vector generation means for generating a feature vector of the image from the extracted first feature and the extracted second feature according to the determined type of the feature used for each of the dimensions.

2. The image signature extraction device, according to Claim 1, wherein

the feature type determination means analyzes the subject for analysis, calculates a degree of the effectiveness of the feature vector constituted of the extracted first features as an

effectiveness value, compares the effectiveness value with a threshold to determine whether or not the feature vector has the effectiveness, and determines the type of the feature used for each of the dimensions according to a determination result.

3. The image signature extraction device, according to Claim 2, wherein

the feature type determination means quantifies a discrimination capability of the feature vector constituted of the first features as the effectiveness value, the discrimination capability indicating a degree of discriminating a different image.

4. The image signature extraction device, according to Claim 2, wherein

the feature type determination means quantifies robustness of the feature vector constituted of the first features as the effectiveness value, the robustness indicating a degree that a value of a feature is not changed by various alteration processing applied to the image.

5. (Canceled)

6. (Canceled)

7. The image signature extraction device, according to Claim 2 or 3, wherein

if the first feature is a quantization value obtained by quantizing a physical quantity extracted from the image, the feature type determination means uses the number of dimensions having predetermined quantization values of the feature vector constituted of the first features, as

the effectiveness value.

8. The image signature extraction device, according to Claim 2 or 4, wherein

if the first feature is a quantization value obtained by quantizing a physical quantity extracted from the image, the feature type determination means calculates a numerical value indicating robustness of the feature vector constituted of the first features based on a value of robustness having been set beforehand for each quantization value, the value of robustness indicating a degree that the quantization value is not changed by various alteration processing applied to the image, and uses the calculated numerical value as the effectiveness value.

9. The image signature extraction device, according to Claim 8, wherein

the feature type determination means uses a mean value of values of robustness for the respective given quantization values as the effectiveness value.

10. (Canceled)

11. (Canceled)

12. (Amended) The image signature extraction device, according to Claim 4, 7, 8, or 9, wherein

the feature type determination means determines the number of dimensions for which the second feature is used, based on the effectiveness value.

13. The image signature extraction device, according to Claim 12, wherein

the feature type determination means has a priority table providing priority of dimensions for which the second features are used, and with reference to the priority table, selects dimensions for which the second features are used for the number of dimensions for which it is determined to use the second features, starting from a dimension of higher priority.

14. (Amended) The image signature extraction device, according to Claim 1, 2, 3, 4, 7, 8, 9, 11, 12, or 13, wherein

the first feature and the second feature are information relating to an edge of the image and information relating to color of the image.

15. (Amended) An image signature extraction method, comprising:

extracting, from an image, a first feature corresponding to each of dimensions of a feature vector, the first feature being a quantization value obtained by quantizing a physical quantity extracted from the image;

extracting, from the image, a second feature which is different from the first feature corresponding to each of dimensions of a feature vector;

analyzing at least one of the image and the extracted first feature as a subject for analysis to determine whether or not the feature vector constituted of the extracted first features has effectiveness in discriminating an image, and if the feature vector has the effectiveness, determining the first feature to be a type of the feature used for each of the dimensions, while if

the feature vector does not have the effectiveness, determining the second feature to be a type of the feature used for each of the dimensions in which the first feature is a predetermined quantization value and determines the first feature to be a type of the feature used for each of remaining dimensions; and

generating a feature vector of the image from the extracted first feature and the extracted second feature according to the determined type of the feature used for each of the dimensions.

16. The image signature extraction method, according to Claim 15, wherein

determining a type of the feature used for each of the dimensions includes analyzing the subject for analysis, calculating a degree of the effectiveness of the feature vector constituted of the extracted first features as an effectiveness value, comparing the effectiveness value with a threshold to determine whether or not the feature vector has the effectiveness, and determining the type of the feature used for each of the dimensions according to a determination result.

17. The image signature extraction method, according to Claim 16, wherein

determining a type of the feature used for each of the dimensions includes quantifying a discrimination capability of the feature vector constituted of the first features as the effectiveness value, the discrimination capability indicating a degree of discriminating a different image.

18. The image signature extraction method, according to Claim 16, wherein

determining a type of the feature used for each of the dimensions includes quantifying

robustness of the feature vector constituted of the first features as the effectiveness value, the robustness indicating a degree that a value of a feature is not changed by various alteration processing applied to the image.

19. (Canceled)

20. (Canceled)

21. The image signature extraction method, according to Claim 16 or 17, wherein determining a type of the feature used for each of the dimensions includes, if the first feature is a quantization value obtained by quantizing a physical quantity extracted from the image, using the number of dimensions having predetermined quantization values of the feature vector constituted of the first features, as the effectiveness value.

22. The image signature extraction method, according to Claim 16 or 18, wherein determining a type of the feature used for each of the dimensions includes, if the first feature is a quantization value obtained by quantizing a physical quantity extracted from the image, calculating a numerical value indicating robustness of the feature vector constituted of the first features based on a value of robustness having been set beforehand for each quantization value, the value of robustness indicating a degree that the quantization value is not changed by various alteration processing applied to the image, and using the calculated numerical value as the effectiveness value.

23. The image signature extraction method, according to Claim 22, wherein

determining a type of the feature used for each of the dimensions includes using a mean value of values of robustness for the respective given quantization values as the effectiveness value.

24. (Canceled)

25. (Canceled)

26. (Amended) The image signature extraction method, according to Claim 18, 21, 22, or 23, wherein

determining a type of the feature used for each of the dimensions includes determining the number of dimensions for which the second feature is used, based on the effectiveness value.

27. The image signature extraction method, according to Claim 26, wherein

a priority table defining priority of dimensions for which the second feature is used is provided, and

determining a type of the feature used for each of the dimensions includes, with reference to the priority table, selecting dimensions for which the second features are used for the number of dimensions for which it is determined to use the second features, starting from a dimension of higher priority.

28. (Amended) The image signature extraction method, according to Claim 15, 16, 17, 18, 21, 22, 23, 26, or 27, wherein the first feature and the second feature are information relating to an edge of the image and information relating to color of the image.

29. (Amended) A program for causing a computer to function as:

first feature extraction means for extracting, from an image, a first feature corresponding to each of dimensions of a feature vector, the first feature being a quantization value obtained by quantizing a physical quantity extracted from the image;

second feature extraction means for extracting, from the image, a second feature which is different from the first feature corresponding to each of dimensions of a feature vector;

feature type determination means for analyzing at least one of the image and the extracted first feature as a subject for analysis to determine whether or not the feature vector constituted of the extracted first features has effectiveness in discriminating an image, and if the feature vector has the effectiveness, determining the first feature to be a type of the feature used for each of the dimensions, while if the feature vector does not have the effectiveness, determining the second feature to be a type of the feature used for each of the dimensions in which the first feature is a predetermined quantization value and determining the first feature to be a type of the feature used for each of remaining dimensions; and

feature vector generation means for generating a feature vector of the image from the extracted first feature and the extracted second feature according to the determined type of the feature used for each of the dimensions.

手 続 補 正 書

（法第１１条の規定による補正）

特許庁審査官　殿

１　国際出願の表示　ＰＣＴ／ＪＰ２０１０／０００１５６

２　出 願 人

名　称　　日本電気株式会社

NEC Corporation

あて名　　〒108-8001　日本国東京都港区芝五丁目７番１号

7-1, Shiba 5-chome, Minato-ku, Tokyo 108-8001 Japan

国　籍　　日本国 JAPAN

住　所　　日本国 JAPAN

３　代 理 人

氏　名　　弁理士　馬　場　　資　博

BABA　Motohiro

あて名　　〒350-0046　日本国埼玉県川越市菅原町２５番地１　石井ビル２階

2nd Floor, Ishii Bldg., 25-1, Sugawara-machi, Kawagoe-shi,

Saitama 350-0046 Japan

４　補正の対象

請求の範囲

５　補正の内容

（１）請求の範囲第３７頁［請求項１］を別紙の通り補正する。

（２）請求の範囲第３８頁［請求項５］を削除する。

（３）請求の範囲第３８頁［請求項６］を削除する。

（４）請求の範囲第３８頁～第３９頁［請求項１０］を削除する。

（５）請求の範囲第３９頁［請求項１１］を削除する。

（６）請求の範囲第３９頁［請求項１２］を別紙の通り補正する。

（７）請求の範囲第３９頁［請求項１４］を別紙の通り補正する。

（８）請求の範囲第３９頁～第４０頁［請求項１５］を別紙の通り補正する。

（９）請求の範囲第４０頁～第４１頁［請求項１９］を削除する。

（１０）請求の範囲第４１頁［請求項２０］を削除する。

（１１）請求の範囲第４１頁［請求項２４］を削除する。

（１２）請求の範囲第４２頁［請求項２５］を削除する。

（１３）請求の範囲第４２頁［請求項２６］を別紙の通り補正する。

（１４）請求の範囲第４２頁［請求項２８］を別紙の通り補正する。

（１５）請求の範囲第４２頁～第４３頁［請求項２９］を別紙の通り補正する。

６　添付書類の目録

（１）請求の範囲第３７頁～第４２頁

請求の範囲

［請求項１］　（補正後）画像から、特徴ベクトルの各次元に対応して、前記画像から抽出した物理量を量子化した量子化値である第１の特徴量を抽出する第１の特徴量抽出手段と、

前記画像から、特徴ベクトルの各次元に対応して前記第１の特徴量とは異なる第２の特徴量を抽出する第２の特徴量抽出手段と、

前記画像および前記抽出された第１の特徴量の少なくとも一方を解析対象として解析して、前記抽出された第１の特徴量から構成される特徴ベクトルの画像を識別する有効性の有無を判定し、有効性が有る場合には各次元に用いる特徴量の種別を前記第１の特徴量と決定し、有効性が無い場合には、第１の特徴量が所定の量子化値となる次元についてはそれに用いる特徴量の種別を前記第２の特徴量とし、残りの次元に用いる特徴量の種別を前記第１の特徴量と決定する特徴量種別決定手段と、

前記決定した各次元に用いる特徴量の種別に従って、前記抽出された第１および第２の特徴量から前記画像の特徴ベクトルを生成する特徴ベクトル生成手段と、

を備えることを特徴とする画像識別子抽出装置。

［請求項２］　前記特徴量種別決定手段は、

前記解析対象を解析して、前記抽出された第１の特徴量から構成される特徴ベクトルの有効性の度合いを有効性数値として算出し、該有効性数値をある閾値と比較することにより前記特徴ベクトルの有効性の有無を判定し、該判定結果に従って各次元に用いる特徴量の種別を決定する

ことを特徴とする請求項１に記載の画像識別子抽出装置。

［請求項３］　前記特徴量種別決定手段は、前記有効性数値として、前記第１の特徴量から構成される特徴ベクトルの、異なる画像を識別できる度合いである識別能力を数値化する

ことを特徴とする請求項２に記載の画像識別子抽出装置。

［請求項４］　前記特徴量種別決定手段は、前記有効性数値として、前記第１の特徴量から構成される特徴ベクトルの、画像への各種改変処理によって特徴量の値が変化しない度合いである頑健性を数値化する
ことを特徴とする請求項２に記載の画像識別子抽出装置。

［請求項５］　（削除）

［請求項６］　（削除）

［請求項７］　前記特徴量種別決定手段は、前記第１の特徴量が前記画像から抽出した物理量を量子化した量子化値の場合に、前記第１の特徴量から構成される特徴ベクトルの、所定の量子化値である次元の数を、前記有効性数値として用いる
ことを特徴とする請求項２または３に記載の画像識別子抽出装置。

［請求項８］　前記特徴量種別決定手段は、前記第１の特徴量が前記画像から抽出した物理量を量子化した量子化値の場合に、予め定められた各量子化値ごとの画像への各種改変処理によって量子化値が変化しない度合いである頑健性の値に基づいて、前記第１の特徴量から構成される特徴ベクトルの頑健性を求め、前記有効性数値として用いる
ことを特徴とする請求項２または４に記載の画像識別子抽出装置。

［請求項９］　前記特徴量種別決定手段は、前記予め与えられる各量子化ごとの頑健性の値の平均値を、前記有効性数値として用いる
ことを特徴とする請求項８に記載の画像識別子抽出装置。

［請求項１０］　（削除）

［請求項１１］　（削除）

［請求項１２］　（補正後）前記特徴量種別決定手段は、前記有効性数値に基づいて、第２の特徴量を用いる次元の数を決定する
ことを特徴とする請求項４、７、８または９に記載の画像識別子抽出装置。

［請求項１３］　前記特徴量種別決定手段は、前記第２の特徴量を用いる次元の優先

順位を定める優先順位テーブルを有し、前記優先順位テーブルを参照して、より上位の優先順位の次元から前記第２の特徴量を用いると決定した次元数だけ、前記第２の特徴量を用いる次元を選択することを特徴とする請求項１２に記載の画像識別子抽出装置。

［請求項１４］　（補正後）前記第１の特徴量および前記第２の特徴量は、前記画像のエッジに関する情報と、前記画像の色に関する情報である

ことを特徴とする請求項１、２、３、４、７、８、９、１１、１２または１３に記載の画像識別子抽出装置。

［請求項１５］　（補正後）画像から、特徴ベクトルの各次元に対応して、前記画像から抽出した物理量を量子化した量子化値である第１の特徴量を抽出し、

前記画像から、特徴ベクトルの各次元に対応して前記第１の特徴量とは異なる第２の特徴量を抽出し、

前記画像および前記抽出された第１の特徴量の少なくとも一方を解析対象として解析して、前記抽出された第１の特徴量から構成される特徴ベクトルの画像を識別する有効性の有無を判定し、有効性が有る場合には各次元に用いる特徴量の種別を前記第１の特徴量と決定し、有効性が無い場合には、第１の特徴量が所定の量子化値となる次元についてはそれに用いる特徴量の種別を前記第２の特徴量とし、残りの次元に用いる特徴量の種別を前記第１の特徴量と決定し、

前記決定した各次元に用いる特徴量の種別に従って、前記抽出された第１および第２の特徴量から前記画像の特徴ベクトルを生成する

ことを特徴とする画像識別子抽出方法。

［請求項１６］　各次元に用いる特徴量の種別の決定では、

前記解析対象を解析して、前記抽出された第１の特徴量から構成される特徴ベクトルの有効性の度合いを有効性数値として算出し、該有効性数値をある閾値と比較することにより前記特徴ベクトルの有効性の有無を判定し、該判定結果に従って各次元に用いる特徴量の種別を

決定する

ことを特徴とする請求項１５に記載の画像識別子抽出方法。

［請求項１７］　各次元に用いる特徴量の種別の決定では、前記有効性数値として、前記第１の特徴量から構成される特徴ベクトルの、異なる画像を識別できる度合いである識別能力を数値化する

ことを特徴とする請求項１６に記載の画像識別子抽出方法。

［請求項１８］　各次元に用いる特徴量の種別の決定では、前記有効性数値として、前記第１の特徴量から構成される特徴ベクトルの、画像への各種改変処理によって特徴量の値が変化しない度合いである頑健性を数値化する

ことを特徴とする請求項１６に記載の画像識別子抽出方法。

［請求項１９］　（削除）

［請求項２０］　（削除）

［請求項２１］　各次元に用いる特徴量の種別の決定では、前記第１の特徴量が前記画像から抽出した物理量を量子化した量子化値の場合に、前記第１の特徴量から構成される特徴ベクトルの、所定の量子化値である次元の数を、前記有効性数値として用いる

ことを特徴とする請求項１６または１７に記載の画像識別子抽出方法。

［請求項２２］　各次元に用いる特徴量の種別の決定では、前記第１の特徴量が前記画像から抽出した物理量を量子化した量子化値の場合に、予め定められた各量子化値ごとの画像への各種改変処理によって量子化値が変化しない度合いである頑健性の値に基づいて、前記第１の特徴量から構成される特徴ベクトルの頑健性を求め、前記有効性数値として用いる

ことを特徴とする請求項１６または１８に記載の画像識別子抽出方法。

［請求項２３］　各次元に用いる特徴量の種別の決定では、前記予め与えられる各量子化ごとの頑健性の値の平均値を、前記有効性数値として用いる

ことを特徴とする請求項２２に記載の画像識別子抽出方法。

［請求項２４］　（削除）

［請求項２５］　（削除）

［請求項２６］　（補正後）各次元に用いる特徴量の種別の決定では、前記有効性数値に基づいて、第２の特徴量を用いる次元の数を決定することを特徴とする請求項１８、２１、２２または２３に記載の画像識別子抽出方法。

［請求項２７］　各次元に用いる特徴量の種別の決定では、前記第２の特徴量を用いる次元の優先順位を定める優先順位テーブルを有し、前記優先順位テーブルを参照して、より上位の優先順位の次元から前記第２の特徴量を用いると決定した次元数だけ、前記第２の特徴量を用いる次元を選択することを特徴とする請求項２６に記載の画像識別子抽出方法。

［請求項２８］　（補正後）前記第１の特徴量および前記第２の特徴量は、前記画像のエッジに関する情報と、前記画像の色に関する情報であることを特徴とする請求項１５、１６、１７、１８、２１、２２、２３、２６または２７に記載の画像識別子抽出方法。

［請求項２９］　（補正後）コンピュータを、

画像から、特徴ベクトルの各次元に対応して、前記画像から抽出した物理量を量子化した量子化値である第１の特徴量を抽出する第１の特徴量抽出手段と、

前記画像から、特徴ベクトルの各次元に対応して前記第１の特徴量とは異なる第２の特徴量を抽出する第２の特徴量抽出手段と、

前記画像および前記抽出された第１の特徴量の少なくとも一方を解析対象として解析して、前記抽出された第１の特徴量から構成される特徴ベクトルの画像を識別する有効性の有無を判定し、有効性が有る場合には各次元に用いる特徴量の種別を前記第１の特徴量と決定し、有効性が無い場合には、第１の特徴量が所定の量子化値となる次元についてはそれに用いる特徴量の種別を前記第２の特徴量とし、残りの次元に用いる特徴量の種別を前記第１の特徴量と決定する特徴量種別決定手段と、

前記決定した各次元に用いる特徴量の種別に従って、前記抽出された第１および第２の特徴量から前記画像の特徴ベクトルを生成する特徴ベクトル生成手段と

して機能させるためのプログラム。

UNITED STATES PATENT AND TRADEMARK OFFICE

UNITED STATES DEPARTMENT OF COMMERCE
United States Patent and Trademark Office
Address: COMMISSIONER FOR PATENTS
P.O. Box 1450
Alexandria, Virginia 22313-1450
www.uspto.gov

APPLICATION NO.	FILING DATE	FIRST NAMED INVENTOR	ATTORNEY DOCKET NO.	CONFIRMATION NO.
13/145,482	07/20/2011	Kota Iwamoto	Q125434	5580

23373 7590 09/14/2011
SUGHRUE MION, PLLC
2100 PENNSYLVANIA AVENUE, N.W.
SUITE 800
WASHINGTON, DC 20037

EXAMINER

ART UNIT	PAPER NUMBER
2624	

NOTIFICATION DATE	DELIVERY MODE
09/14/2011	ELECTRONIC

Please find below and/or attached an Office communication concerning this application or proceeding.

The time period for reply, if any, is set in the attached communication.

Notice of the Office communication was sent electronically on above-indicated "Notification Date" to the following e-mail address(es):

sughrue@sughrue.com
PPROCESSING@SUGHRUE.COM
USPTO@SUGHRUE.COM

UNITED STATES PATENT AND TRADEMARK OFFICE

Commissioner for Patents
United States Patent and Trademark Office
P.O. Box 1450
Alexandria, VA 22313-1450
www.uspto.gov

SUGHRUE MION, PLLC
2100 PENNSYLVANIA AVENUE, N.W.
SUITE 800
WASHINGTON DC 20037

In re Application of	
IWAMOTO et al.	**: DECISION ON REQUEST TO**
Application No.: 13/145,482	**: PARTICIPATE IN THE PATENT**
Filed: 20 July 2011	**: PROSECUTION HIGHWAY**
Attorney Docket No.: Q125434	**: PROGRAM AND PETITION**
For: IMAGE SIGNATURE	**: TO MAKE SPECIAL UNDER**
EXTRACTION DEVICE	**: 37 CFR 1.102(a)**

This is a decision on the request to participate in the PCT Patent Prosecution Highway (PCT-PPH) pilot program and the petition under 37 CFR 1.102(a), filed on 11 August 2011 and supplemented on 08 September 2011, to make the above-identified application special.

The request and petition are **GRANTED**.

Discussion

A grantable request to participate in the PCT-PPH pilot program and petition to make special require:

(1) The U.S. application must have an eligible relationship to one or more PCT applications where the ISA or IPEA are the JPO, EPO, KIPO, NPI, NBPR, or USPTO;

(2) At least one claim in the PCT application has novelty, inventive step, and industrial applicability and must be free of any observations in Box VIII in the latest work product in the international stage or applicant must identify and explain why the claim(s) is/are not subject to the observation in Box VIII;

(3) Applicant must submit a copy of the claim(s) from the PCT application(s) that have novelty, inventive step, and industrial applicability along with an English translation thereof and a statement that the English translation is accurate, if the claims are not in the English language;

(4) All the claims in the U.S. application must sufficiently correspond or be amended to sufficiently correspond to the claim(s) that have novelty, inventive step, and industrial applicability in the PCT application(s);

(5) Examination of the U.S. application has not begun;

(6) Applicant must submit a copy of the latest international work product from the PCT application indicating that the claim(s) have novelty, inventive step, and industrial applicability

along with an English translation thereof and a statement that the English translation is accurate if the latest international work product is not in the English language;

(7) Applicant must submit an IDS listing the documents cited by the PCT examiner in the international work product along with copies of documents except U.S. patents or U.S. patent application publications.

The request to participate in the PCT-PPH pilot program and petition comply with the above requirements. Accordingly, the above-identified application has been accorded "special" status.

Telephone inquiries concerning this decision should be directed to Lee W. Young at 571-272-4549.

All other inquiries concerning the examination or status of the application is accessible in the PAIR system at http://www.uspto.gov/ebc.index.html.

This application will be forwarded to the examiner for action on the merits commensurate with this decision once this application's formality reviews have been completed.

Lee W. Young
TQAS Technology Center 2600

UNITED STATES PATENT AND TRADEMARK OFFICE

Commissioner for Patents
United States Patent and Trademark Office
P.O. Box 1450
Alexandria, VA 22313-1450
www.uspto.gov

26111
STERNE, KESSLER, GOLDSTEIN & FOX P.L.L.C.
1100 New York Avenue, N.W.
Washington, DC 20005

MAILED

AUG 29 2011

PCT LEGAL ADMINISTRATION

In re Application of :
JESCHKE *et al* :
U.S. Application No.: 13/145,485 :
PCT No.: PCT/EP2009/009009 :
Int. Filing Date: 16 December 2009 :
Priority Date: 29 December 2008 :
Docket No.: 2400.4650002/RWE :
For: METHOD FOR IMPROVED USE OF :
THE PRODUCTION POTENTIAL OF :
GENETICALLY MODIFIED PLANTS :

DECISION ON PETITION UNDER 37 CFR 1.137(b)

Applicants' petition to revive under 37 CFR 1.137(b) filed with the national stage papers on 20 July 2011 is hereby **GRANTED** as follows:

The appropriate fee and the petition fee have been paid. Applicants made the required statement pursuant to 37 CFR 1.137(b)(3). A terminal disclaimer is not required. Accordingly, all requirements under 37 CFR 1.137(b) have been satisfied.

This application is being forwarded to the United States Designated/Elected Office for further processing.

James Thomson

James Thomson
Attorney Advisor
Office of PCT Legal Administration

Tel.: (571) 272-3302

UNITED STATES PATENT AND TRADEMARK OFFICE

UNITED STATES DEPARTMENT OF COMMERCE
United States Patent and Trademark Office
Address: COMMISSIONER FOR PATENTS
P.O. Box 1450
Alexandria, Virginia 22313-1450
www.uspto.gov

APPLICATION NO.	FILING DATE	FIRST NAMED INVENTOR	ATTORNEY DOCKET NO.	CONFIRMATION NO.
13/145,497	07/20/2011	Tatsuo Kaneko	14434.0408USWO	5695

52835 7590 10/24/2011
HAMRE, SCHUMANN, MUELLER & LARSON, P.C.
P.O. BOX 2902
MINNEAPOLIS, MN 55402-0902

EXAMINER	
ART UNIT	PAPER NUMBER
1724	

MAIL DATE	DELIVERY MODE
10/24/2011	PAPER

Please find below and/or attached an Office communication concerning this application or proceeding.

The time period for reply, if any, is set in the attached communication.

UNITED STATES PATENT AND TRADEMARK OFFICE

Commissioner for Patents
United States Patent and Trademark Office
P.O. Box 1450
Alexandria, VA 22313-1450
www.uspto.gov

October 24, 2011 WG

In re application of	:	DECISION ON REQUEST TO
Tatsuo Kaneko et al.	:	PARTICIPATE IN PATENT
Serial No. 13/145,497	:	PROSECUTION HIGHWAY
Filed: July 20, 2011	:	PROGRAM AND
For: METAL COLLECTION METHOD	:	PETITION TO MAKE SPECIAL
AND METAL COLLECTION DEVICE	:	UNDER 37 CFR 1.102(a)

This is a decision on the request to participate in the Patent Prosecution Highway (PPH) program and the petition under 37 CFR 1.102(a) to make the above-identified application special filed July 20, 2011.

The request and petition are **GRANTED**.

A grantable request to participate in the PPH program and petition to make special require:

(1) The U.S. application must validly claim priority under 35 U.S.C. 119(a) to one or more applications filed in the JPO, note where the JPO application with similar claims is not the same application from which the U.S. application claims priority that the applicant must identify the relationship between the JPO application with similar claims and the JPO priority application;

(2) Applicant must submit a copy of:
   a. The allowable/patentable claim(s) from the JPO application(s) or if a copy of the allowable/patentable claims is available via the Dossier Access System (DAS) applicant may request the USPTO to obtain a copy from DAS; however, if the USPTO is unable to obtain a copy from the DAS, the applicant will be required to submit a copy;
   b. An English translation of the allowable/ patentable claim(s), if applicable; and
   c. A statement that the English translation is accurate, if applicable;

(3) Applicant must:
   a. Ensure all the independent claims in the U.S. application must sufficiently correspond or be amended to sufficiently correspond to the allowable/patentable claim(s) in the JPO application(s); and
   b. Submit a claims correspondence table in English;

(4) Examination of the U.S. application has not begun;

(5) Applicant must submit:
   a. Documentation of prior office action:
      i. a copy of the office action(s) just prior to the "Decision to Grant a Patent" from each of the JPO application(s) containing the allowable/patentable claims(s) or
      ii. if the allowable/patentable claim(s) are from "Notification of Reasons for Refusal" then the Notification of Reasons for Refusal or
      iii. if the JPO application is a first action allowance then no office action from the JPO is necessary should be indicated on the request/petition form;
      Further, if a copy of the documents from (i) or (ii) is available via the Dossier Access System (DAS), applicant may request the USPO obtain a copy from the DAS; however, if the USPTO is unable to obtain a copy of the DAS, the applicant will be required to submit a copy; and
   b. An English language translation of the JPO Office action from (5)(a)(i)-(ii) above if applicable; and

(6) Applicant must submit:
   a. An IDS listing the documents cited by the JPO examiner in the JPO office action (unless already submitted in this application)
   b. Copies of documents except U.S. patents or U.S. patent application publications (unless already submitted in this application).

The request to participate in the PPH program and petition comply with the above requirements. Accordingly, the above-identified application has been accorded "special" status.

The application is being forwarded to the examiner for action on the merits commensurate with this decision.

Any inquiry regarding this decision should be directed to Walter D. Griffin, Supervisory Patent Examiner, at (571) 272-1447.

All other inquiries concerning the examination or status of the application is accessible in the PAIR system at http://www.uspto.gov/ebc/index.html.

/Walter D. Griffin/

Walter D. Griffin
Supervisory Patent Examiner
Technology Center 1700

UNITED STATES PATENT AND TRADEMARK OFFICE

Commissioner for Patents
United States Patent and Trademark Office
P.O. Box 1450
Alexandria, VA 22313-1450
www.uspto.gov

MAILED

SEP 14 2011

PCT LEGAL ADMINISTRATION

BUCHANAN, INGERSOLL & ROONEY PC
POST OFFICE BOX 1404
ALEXANDRIA VA 22313-1404

In re Application of
WATIER et al.
Application No.: 13/145,543
PCT No.: PCT/EP09/66463
Int. Filing Date: 04 December 2009
Priority Date: 08 December 2008
Attorney Docket No.: 1034452-000042
For: METHODS AND COMPOSITIONS FOR CANCER PROGNOSIS

DECISION on

PETITION

UNDER 37 CFR 1.137(b)

The petition to revive under 37 CFR 1.137(b) filed 20 July 2011 in the above-captioned application is hereby **GRANTED** as follows:

Applicant's statement that "the entire delay in filing the attached filing under 35 U.S.C. 371 from the due date for filing of a grantable petition under 37 CFR 1.137(b) was unintentional" has been interpreted as meaning that "entire delay in filing the required reply from the due date for the reply until the filing of this petition under 37 CFR 1.137(b) was unintentional" as required by 37 CFR 1.137(b)(3) at the time of filing this petition. If this is an incorrect interpretation in view of the rules, petitioner is required to promptly notify this office.

A review of the application file reveals that the basic national fee has now been provided. The required petition fee of $810 will be charged to applicant's deposit account per his authorization. Thus, the requirements of 37 CFR 1.137(b) have been satisfied. Therefore, the request to revive the application abandoned under 35 U.S.C. 371(d) is granted as to the National stage in the United States of America.

The application will be forwarded to the United States Designated/Elected Office for further processing including issuance of a Notification of Missing Requirements indicating, *inter alia*, that an oath or declaration, in compliance with 37 CFR 1.497(a) and (b), and the surcharge for filing the oath or declaration after the thirty month period, is required.

/Cynthia M. Kratz/
Cynthia M. Kratz
Attorney Advisor
PCT Legal Office
Office of PCT Legal Administration
Telephone: (571) 272-3286

PTO/SB/20PCT-EP (05-10)
Approved for use through 01/31/2012. OMB 0651-0058
U.S. Patent and Trademark Office; U. S. DEPARTMENT OF COMMERCE
Under the Paperwork Reduction Act of 1995, no persons are required to respond to a collection of information unless it displays a valid OMB control number.

REQUEST FOR PARTICIPATION IN THE PATENT COOPERATION TREATY - PATENT PROSECUTION HIGHWAY (PCT-PPH) PILOT PROGRAM BETWEEN THE EUROPEAN PATENT OFFICE (EPO) AND THE USPTO

Application No:	13/145,549	Filing date:	August 12, 2011
First Named Inventor:	Udo HACK		
Title of the Invention:	SOLAR ABSORBER MODULE AND SOLAR ABSORBER ARRANGEMENT		

THIS REQUEST FOR PARTICIPATION IN THE PCT-PPH PILOT PROGRAM ALONG WITH THE REQUIRED DOCUMENTS MUST BE SUBMITTED VIA EFS-WEB. INFORMATION REGARDING EFS-WEB IS AVAILABLE AT HTTP://WWW.USPTO.GOV/EBC/EFS_HELP.HTML

APPLICANT HEREBY REQUESTS PARTICIPATION IN THE PCT-PPH PROGRAM AND PETITIONS TO MAKE THE ABOVE-IDENTIFIED APPLICATION SPECIAL UNDER THE PCT-PPH PROGRAM.

The above-identified application is (1) a national stage entry of the corresponding PCT application, or (2) a national stage entry of another PCT application which claims priority to the corresponding PCT application, or (3) a national application that claims domestic/ foreign priority to the corresponding PCT application, or (4) a national application which forms the basis for the priority claim in the corresponding PCT application, or (5) a continuing application of a U.S. application that satisfies one of (1) to (4) above, or (6) a U.S. application that claims domestic benefit to a U.S. provisional application which forms the basis for the priority claim in the corresponding PCT application.

The corresponding PCT application number(s) is/are: PCT/EP2010/051181

The international date of the corresponding PCT application(s) is/are: February 1, 2010

I. List of Required Documents:

a. **A copy of the latest international work product (WO/ISA, WO/IPEA, or IPER) in the above–identified corresponding PCT application(s)**

☑ Is attached

☐ Is not attached because the document is already in the U.S. application.

b. **A copy of all claims which were indicated as having novelty, inventive step and industrial applicability in the above-identified corresponding PCT application(s).**

☑ Is attached.

☐ Is not attached because the document is already in the U.S. application.

c. **English translations of the documents in a. and b. above are attached (if the documents are not in the English language). A statement that the English translation is accurate is attached for the document in b. above.**

This collection of information is required by 35 U.S.C. 119, 37 CFR 1.55, and 37 CFR 1.102(d). The information is required to obtain or retain a benefit by the public, which is to file (and by the USPTO to process) an application. Confidentiality is governed by 35 U.S.C. 122 and 37 CFR 1.11 and 1.14. This collection is estimated to take 2 hours to complete, including gathering, preparing, and submitting the completed application form to the USPTO. Time will vary depending upon the individual case. Any comments on the amount of time you require to complete this form and/or suggestions for reducing this burden should be sent to the Chief Information Officer, U.S. Patent and Trademark Office, U.S. Department of Commerce, P.O. Box 1450, Alexandria, VA 22313-1450. DO NOT SEND FEES OR COMPLETED FORMS TO THIS ADDRESS.

Approved for use through 01/31/2012. OMB 0651-0058
U.S.Patent and Trademark Office; U.S. DEPARTMENT OF COMMERCE

Under the Paperwork Reduction Act of 1995, no persons are required to respond to a collection of information unless it displays a valid OMB control number.

REQUEST FOR PARTICIPATION IN THE PCT-PPH PILOT PROGRAM BETWEEN THE EPO AND THE USPTO

(continued)

Application No.:	13/145,549
First Named Inventor:	Udo HACK

d. **(1) An information disclosure statement listing the documents cited in the international work products (ISR, WO/ISA, WO/IPEA, IPER) of the corresponding PCT application.**

☐ Is attached

☑ Has already been filed in the above-identified U.S. application on July 20, 2011

(2) Copies of all documents (except) for U.S. patents or U.S. patent application publications)

☐ Are attached.

☑ Have already been filed in the above-identified U.S. application on July 20, 2011

II. Claims Correspondence Table:

Claims in US Application	Patentable Claims in the corresponding PCT Application	Explanation regarding the correspondence
1	23	US-23 minor linguistic differences from PCT-1
2	24	US-24 minor linguistic differences from PCT-2
3	25	US-25 minor linguistic differences from PCT-3
4	26	US-26 minor linguistic differences from PCT-4
5	27	US-27 minor linguistic differences from PCT-5
6	28	US-28 minor linguistic differences from PCT-6
7	29	US-29 minor linguistic differences from PCT-7
8	30	US-30 minor linguistic differences from PCT-8
9	31	US-31 minor linguistic differences from PCT-9
10	32	US-32 minor linguistic differences from PCT-10
11	33	US-33 minor linguistic differences from PCT-11
12	34	US-34 minor linguistic differences from PCT-12
13	35	US-35 minor linguistic differences from PCT-13
14	36	US-36 minor linguistic differences from PCT-14
15	37	US-37 minor linguistic differences from PCT-15
16	38	US-38 minor linguistic differences from PCT-16
17	39	US-39 minor linguistic differences from PCT-17
18	40	US-40 minor linguistic differences from PCT-18
Cont'd	Cont'd	(Continued on enclosed Claims Correspondence Table)

III. All the claims in the US application sufficiently correspond to the patentable claims in the corresponding PCT application.

Signature /Alessandro Steinfl, Reg. No. 56,448/	Date August 24, 2011
Name (Print/Typed) Alessandro Steinfl	Registration Number 56448

Claims Correspondence Table
(continued)

Application No.: 13/145,549

First Named Inventor: Udo HACK

II. Claims Correspondence Table (continued):

Claims in US Application	Patentable Claims in the corresponding PCT Application	Explanation regarding the correspondence
19	41	US-41 minor linguistic differences from PCT-19
20	42	US-42 minor linguistic differences from PCT-20
21	43	US-43 minor linguistic differences from PCT-21
22	44	US-44 minor linguistic differences from PCT-22

UNITED STATES PATENT AND TRADEMARK OFFICE

UNITED STATES DEPARTMENT OF COMMERCE
United States Patent and Trademark Office
Address: COMMISSIONER FOR PATENTS
P.O. Box 1450
Alexandria, Virginia 22313-1450
www.uspto.gov

APPLICATION NO.	FILING DATE	FIRST NAMED INVENTOR	ATTORNEY DOCKET NO.	CONFIRMATION NO.
13/145,549	08/12/2011	Udo Hack	P859-US	6128

72932 7590 09/26/2011
Steinfl & Bruno
301 N Lake Ave Ste 810
Pasadena, CA 91101

EXAMINER

ART UNIT	PAPER NUMBER
3749	

MAIL DATE	DELIVERY MODE
09/26/2011	PAPER

Please find below and/or attached an Office communication concerning this application or proceeding.

The time period for reply, if any, is set in the attached communication.

UNITED STATES PATENT AND TRADEMARK OFFICE

Commissioner for Patents
United States Patent and Trademark Office
P.O. Box 1450
Alexandria, VA 22313-1450
www.uspto.gov

Steinfl & Bruno
301 N Lake Ave Ste 810
Pasadena CA 91101

In re Application of
HACK, UDO
Application No. 13/145,549
Filed: August 12, 2011
Attorney Docket No. P859-US
For: SOLAR ABSORBER MODULE AND SOLAR ABSORBER ARRANGEMENT

: DECISION ON REQUEST TO PARTICIPATE IN PATENT PCT/PROSECUTION HIGHWAY PROGRAM AND PETITION TO MAKE SPECIAL UNDER 37 CFR 1.102(a)

This is a decision on the request to participate in the Patent Prosecution Highway (PPH) program and the petition under 37 CFR 1.102(a), filed August 24, 2011 to make the above-identified application special.

The request and petition are granted.

A grantable request to participate in the PPH pilot program and petition to make special require:

(1) The U.S. application must validly claim priority under 35 U.S.C. 119(a) to one or more applications filed in the JPO;
(2) Applicant must submit a copy of the allowable/patentable claim(s) from the JPO/PCT application(s) along with an English translation thereof and a statement that the English translation is accurate;
(3) All the claims in the U.S. application must sufficiently correspond or be amended to sufficiently correspond to the allowable/patentable claim(s) in the JPO application(s);
(4) Examination of the U.S. application has not begun;
(5) Applicant must submit a copy of all the office actions from each of the JPO/PCT application(s) containing the allowable/patentable claim(s) along with an English translation thereof and a statement that the English translation is accurate; and
(6) Applicant must submit an IDS listing the documents cited by the JPO examiner in the JPO office action along with copies of documents except U.S. patents or U.S. patent application publications.
In light of the petition being properly submitted, the request to participate in the PPH program and the petition comply with the above requirements. Accordingly, the above-identified application has been accorded "special" status.

The applicant is encouraged to cite and submit all relevant prior art references, if any, to facilitate examination in this application. Upon completion of pre-examination processing, this application will be forwarded to an examiner for examination.

Telephone inquiries concerning this decision should be directed to Henry C. Yuen at 571-272-4485. All other inquiries concerning the examination or status of the application should be directed to Stephen McAllister, SPE of Art Unit 3749, and 571-272-6785 for Class 126 and also accessible in the PAIR system at http://www.uspto.gov/ebc.index.html.

Petition is **granted**.

/Henry C. Yuen/

Henry C. Yuen, Special Programs Examiner
Technology Center 3700 – Mechanical Engineering,
Manufacturing and Products
571-272-4856

PTO/SB/20PCT-JP (05-10)
Approved for use through 01/31/2012. OMB 0651-0058
U.S. Patent and Trademark Office; U.S. DEPARTMENT OF COMMERCE
Under the Paperwork Reduction Act of 1995, no persons are required to respond to a collection of information unless it contains a valid OMB control number.

REQUEST FOR PARTICIPATION IN THE PATENT COOPERATION TREATY – PATENT PROSECUTION HIGHWAY (PCT-PPH) PILOT PROGRAM BETWEEN THE JAPAN PATENT OFFICE (JPO) AND THE USPTO

Application No.:	Not Yet Assigned	Filing Date:	July 20, 2011
First Named Inventor:	Tetsuo OKAMOTO		
Title of the Invention:	ELECTRIC MOTOR		

THIS REQUEST FOR PARTICIPATION IN THE PCT-PPH PILOT PROGRAM ALONG WITH THE REQUIRED DOCUMENTS MUST BE SUBMITTED VIA EFS-WEB. INFORMATION REGARDING EFS-WEB IS AVAILABLE AT HTTP://WWW.USPTO.GOV/EBC/EFS_HELP.HTML

APPLICANT HEREBY REQUESTS PARTICIPATION IN THE PCT-PPH PROGRAM AND PETITIONS TO MAKE THE ABOVE-IDENTIFIED APPLICATION SPECIAL UNDER THE PCT-PPH PROGRAM.

The above-identified application is (1) a national stage entry of the corresponding PCT application, or (2) a national stage entry of another PCT application which claims priority to the corresponding PCT application, or (3) a national application that claims domestic/foreign priority to the corresponding PCT application, or (4) a national application which forms the basis for the priority claim in the corresponding PCT application, or (5) a continuing application of a U.S. application that satisfies one of (1) to (4) above, or (6) a U.S. application that claims domestic benefit to a U.S. provisional application which forms the basis for the priority claim in the corresponding PCT application.

The corresponding PCT application number(s) is/are: PCT/JP2009/002010

The international date of the corresponding PCT application(s) is/are: May 7, 2009

I. List of Required Documents:

a. **A copy of the latest international work product (WO/ISA, WO/IPEA, or IPER) in the above-identified corresponding PCT application(s)**

[X] Is attached.

[ ] Is not attached because the document is already in the U.S. application.

b. **A copy of all claims which were indicated as having novelty, inventive step and industrial applicability in the above-identified corresponding PCT application(s).**

[X] Is attached.

[ ] Is not attached because the document is already in the U.S. application.

c. **English translations of the documents in a. and b. above are attached (if the documents are not in the English language). A statement that the English translation is accurate is attached for the document in b. above.**

d. **(1) An information disclosure statement listing the documents cited in the international work products (ISR, WO/ISA, WO/IPEA, IPER) of the corresponding PCT application.**

[X] Is attached.

[ ] Has already been filed in the above-identified U.S. application on _____

(2) Copies of all documents (except) for U.S. patents or U.S. patent application publications)

[X] Are attached.

[ ] Have already been filed in the above-identified U.S. application on _____

Under the Paperwork Reduction Act of 1995, no persons are required to respond to a collection of information unless it contains a valid OMB control number.

REQUEST FOR PARTICIPATION IN THE PCT-PPH PILOT PROGRAM BETWEEN THE JPO AND THE USPTO
(continued)

Application No.:	Not Yet Assigned
First Named Inventor:	Tetsuo OKAMOTO

II. Claims Correspondence Table:

Claims in US Application	Patentable Claims in the corresponding PCT Application	Explanation regarding the correspondence
1, 2	1, 2	Claims 1and 2 were patentable in the Notice of Allowance dated April 28, 2009.

III. All the claims in the US application sufficiently correspond to the patentable claims in the corresponding PCT application.

Signature	/Steven M. Rabin/	Date	July 20, 2011
Name (Print/Typed)	Steven M. Rabin	Registration Number	29,102

UNITED STATES PATENT AND TRADEMARK OFFICE

UNITED STATES DEPARTMENT OF COMMERCE
United States Patent and Trademark Office
Address: COMMISSIONER FOR PATENTS
P.O. Box 1450
Alexandria, Virginia 22313-1450
www.uspto.gov

APPLICATION NO.	FILING DATE	FIRST NAMED INVENTOR	ATTORNEY DOCKET NO.	CONFIRMATION NO.
13/145,559	07/20/2011	Tetsuo Okamoto	HAG-141NP	6338

23995 7590 11/03/2011
RABIN & Berdo, PC
1101 14TH STREET, NW
SUITE 500
WASHINGTON, DC 20005

EXAMINER

ART UNIT	PAPER NUMBER
2834	

MAIL DATE	DELIVERY MODE
11/03/2011	PAPER

Please find below and/or attached an Office communication concerning this application or proceeding.

The time period for reply, if any, is set in the attached communication.

UNITED STATES PATENT AND TRADEMARK OFFICE

Commissioner for Patents
United States Patent and Trademark Office
P.O. Box 1450
Alexandria, VA 22313-1450
www.uspto.gov

RABIN & Berdo, PC
1101 14TH STREET, NW
SUITE 500
WASHINGTON DC 20005

NOV 3 2011

In re Application of	:	
Tetsuo OKAMOTO	:	DECISION ON REQUEST TO
Application No. 13/145559	:	PARTICIPATE IN PATENT
Filed: 20 July 2011	:	PROSECUTION HIGHWAY
Attorney Docket No. HAG-141NP	:	PILOT PROGRAM AND PETITION
	:	TO MAKE SPECIAL UNDER
	:	37 CFR 1.102(a)

This is a decision on the request to participate in the Patent Prosecution Highway (PPH) pilot program and the petition under 37 CFR 1.102(a), filed 20 July 2011, to make the above-identified application special.

The request and petition are **GRANTED**.

A grantable request to participate in the PPH pilot program and petition to make special require:

(1) The U.S. application must validly claim priority under 35 U.S.C. 119(a) to one or more applications filed in the PCT;
(2) Applicant must submit a copy of the allowable/patentable claim(s) from the PCT application(s) along with an English translation thereof and a statement that the English translation is accurate;
(3) All the claims in the U.S. application must sufficiently correspond or be amended to sufficiently correspond to the allowable/patentable claim(s) in the PCT application(s);
(4) Examination of the U.S. application has not begun;
(5) Applicant must submit a copy of all the office actions from each of the PCT application(s) containing the allowable/patentable claim(s) along with an English translation thereof and a statement that the English translation is accurate; and
(6) Applicant must submit an IDS listing the documents cited by the PCT examiner in the PCT office action along with copies of documents except U.S. patents or U.S. patent application publications.

The request to participate in the PPH pilot program and petition comply with the above requirements. Accordingly, the above-identified application has been accorded "special" status.

Response must be filed via the Electronic Filing System (EFS) with the Document Code PPH.PET.

Telephone inquiries concerning this decision should be directed to Michael Day at 571-272-1568.

All other inquiries concerning the examination or status of the application is accessible in the PAIR system at http://www.uspto.gov/ebc.index.html.

This application is being forwarded to the examiner for action on the merits commensurate with this decision.

/Michael Day/

Michael Day
TQAS
Technology Center 2800 – Semiconductors
Electrical & Optical Systems & Components

UNITED STATES PATENT AND TRADEMARK OFFICE

Commissioner for Patents
United States Patent and Trademark Office
P.O. Box 1450
Alexandria, VA 22313-1450
www.uspto.gov

MAILED

SEP 27 2011

PCT LEGAL ADMINISTRATION

CROCKETT & CROCKETT, P.C.
26020 ACERO
SUITE 200
MISSION VIEJO CA 92691

In re Application of :
LU, Hai Xin :
U.S. App. No.: 13/145,633 (13/145,630) :
PCT No.: PCT/SG2009/000033 :
Int. Filing Date: 23 January 2009 :
Priority Date: None :
Attorney Docket No.: 213/370US :
For: METHOD OF ACCESSING A DATA :
STORAGE DEVICE :

DECISION

This application is before the Office of PCT Legal Administration for matters arising under 35 USC 371.

BACKGROUND

On 21 July 2011, applicant filed two sets of paperwork for the national phase entry of PCT/SG2009/000033. The sets were assigned application nos. 13/145,633 and 13/145,630, respectively. Application 13/145,633 is the national phase.

DISCUSSION

Applicant has submitted multiple sets of papers for the national stage entry of international application number PCT/SG2009/000033. The end result for an international application designating the United States of America is a single U.S. national stage application. Therefore, the submission of multiple sets of national stage papers to enter the United States is improper. Accordingly, 13/145,633 and 13/145,630 have been consolidated into a single application, 13/145,633.

All future correspondence in regards to the national phase of PCT/SG2009/000033 should use 13/145,633.

CONCLUSION

Any further correspondence with respect to this matter may be filed electronically via EFS-Web selecting the document description "Petition for review and processing by the PCT

Legal Office" or by mail addressed to Mail Stop PCT, Commissioner for Patents, Office of PCT Legal Administration, P.O. Box 1450, Alexandria, Virginia 22313-1450, with the contents of the letter marked to the attention of the Office of PCT Legal Administration.

This application is being referred to the National Stage Processing Division of the Office of Patent Application Processing for further action consistent with this decision.

/Erin P. Thomson/

Erin P. Thomson
Attorney Advisor
PCT Legal Administration

Telephone: 571-272-3292

PTO/SB/20PCT-JP (05-10)
Approved for use through 01/31/2012. OMB 0651-0058
U.S. Patent and Trademark Office; U. S. DEPARTMENT OF COMMERCE
Under the Paperwork Reduction Act of 1995, no persons are required to respond to a collection of information unless it displays a valid OMB control number.

REQUEST FOR PARTICIPATION IN THE PATENT COOPERATION TREATY - PATENT PROSECUTION HIGHWAY (PCT-PPH) PILOT PROGRAM BETWEEN THE JAPAN PATENT OFFICE (JPO) AND THE USPTO

Application No:	13/145,690	Filing date:	July 21, 2011
First Named Inventor:	TAKEDA		
Title of the Invention:	DISPLAY DEVICE, GAME SYSTEM, AND GAME PROCESS METHOD		

THIS REQUEST FOR PARTICIPATION IN THE PCT-PPH PILOT PROGRAM ALONG WITH THE REQUIRED DOCUMENTS MUST BE SUBMITTED VIA EFS-WEB. INFORMATION REGARDING EFS-WEB IS AVAILABLE AT HTTP://WWW.USPTO.GOV/EBC/EFS_HELP.HTML

APPLICANT HEREBY REQUESTS PARTICIPATION IN THE PCT-PPH PROGRAM AND PETITIONS TO MAKE THE ABOVE-IDENTIFIED APPLICATION SPECIAL UNDER THE PCT-PPH PROGRAM.

The above-identified application is (1) a national stage entry of the corresponding PCT application, or (2) a national stage entry of another PCT application which claims priority to the corresponding PCT application, or (3) a national application that claims domestic/ foreign priority to the corresponding PCT application, or (4) a national application which forms the basis for the priority claim in the corresponding PCT application, or (5) a continuing application of a U.S. application that satisfies one of (1) to (4) above, or (6) a U.S. application that claims domestic benefit to a U.S. provisional application which forms the basis for the priority claim in the corresponding PCT application.

The corresponding PCT application number(s) is/are: PCT/JP2011/000566

The international date of the corresponding PCT application(s) is/are: 02 February 2011

I. List of Required Documents:

a. **A copy of the latest international work product (WO/ISA, WO/IPEA, or IPER) in the above–identified corresponding PCT application(s)**

☑ Is attached.

☐ Is not attached because the document is already in the U.S. application.

b. **A copy of all claims which were indicated as having novelty, inventive step and industrial applicability in the above-identified corresponding PCT application(s).**

☑ Is attached.

☐ Is not attached because the document is already in the U.S. application.

c. **English translations of the documents in a. and b. above are attached (if the documents are not in the English language). A statement that the English translation is accurate is attached for the document in b. above.**

This collection of information is required by 35 U.S.C. 119, 37 CFR 1.55, and 37 CFR 1.102(d). The information is required to obtain or retain a benefit by the public, which is to file (and by the USPTO to process) an application. Confidentiality is governed by 35 U.S.C. 122 and 37 CFR 1.11 and 1.14. This collection is estimated to take 2 hours to complete, including gathering, preparing, and submitting the completed application form to the USPTO. Time will vary depending upon the individual case. Any comments on the amount of time you require to complete this form and/or suggestions for reducing this burden should be sent to the Chief Information Officer, U.S. Patent and Trademark Office, U.S. Department of Commerce, P.O. Box 1450, Alexandria, VA 22313-1450. DO NOT SEND FEES OR COMPLETED FORMS TO THIS ADDRESS.

Approved for use through 01/31/2012. OMB 0651-0058
U.S.Patent and Trademark Office; U.S. DEPARTMENT OF COMMERCE

Under the Paperwork Reduction Act of 1995, no persons are required to respond to a collection of information unless it displays a valid OMB control number.

REQUEST FOR PARTICIPATION IN THE PCT-PPH PILOT PROGRAM BETWEEN THE JPO AND THE USPTO

(continued)

Application No.:	13/145,690
First Named Inventor:	TAKEDA

d. **(1) An information disclosure statement listing the documents cited in the international work products (ISR, WO/ISA, WO/IPEA, IPER) of the corresponding PCT application.**

☑ Is attached

☐ Has already been filed in the above-identified U.S. application on _____

(2) Copies of all documents (except) for U.S. patents or U.S. patent application publications)

☑ Are attached.

☐ Have already been filed in the above-identified U.S. application on _____

II. Claims Correspondence Table:

Claims in US Application	Patentable Claims in the corresponding PCT Application	Explanation regarding the correspondence
1	1	Identical wording between U.S. and JP claims
2	2	Identical wording between U.S. and JP claims
3	3	Identical wording between U.S. and JP claims
4	4	Essentially identical wording between U.S. and JP claims*
5	5	Identical wording between U.S. and JP claims
6	6	Identical wording between U.S. and JP claims
7	7	Identical wording between U.S. and JP claims
8	8	Essentially identical wording between U.S. and JP claims*
9	9	Essentially identical wording between U.S. and JP claims*
10	10	Essentially identical wording between U.S. and JP claims*
11	11	Essentially identical wording between U.S. and JP claims*
12	12	Essentially identical wording between U.S. and JP claims*
13	13	Essentially identical wording between U.S. and JP claims*
14	14	Essentially identical wording between U.S. and JP claims*
15	15	Identical wording between U.S. and JP claims
		*Only difference is deletion of multiple dependency wording from JP claims.

III. All the claims in the US application sufficiently correspond to the patentable claims in the corresponding PCT application.

Signature /Raymond Y. Mah/	Date August 12, 2011
Name (Print/Typed) /Raymond Y. Mah/	Registration Number 41,426

U.S. APPLICATION NO. 13/145,690
ATTORNEY DOCKET NO. RYM-723-3133

COPY OF THE LATEST INTERNATIONAL WORK PRODUCT (WO/ISA)

(ATTACHMENT 1.a. and 1.c. of form PTO/SB/20PCT-JP(05-10)

特許協力条約

発信人　日本国特許庁（国際調査機関）

代理人
▲高▼山　嘉成
様

あて名
〒532-0011
日本国大阪府大阪市淀川区西中島４丁目７番２０号
日宝新大阪第一ビル２階６号

受領
11.3.09
高山

ＰＣＴ
国際調査機関の見解書
（法施行規則第40条の2）
［ＰＣＴ規則43の2.1］

発送日 （日.月.年）	０８．０３．２０１１
出願人又は代理人の書類記号　FXP2140W0	今後の手続きについては、下記２を参照すること。

国際出願番号	国際出願日	優先日
ＰＣＴ／ＪＰ２０１１／０００５６６	（日.月.年）　０２．０２．２０１１	（日.月.年）　０３．０２．２０１０

国際特許分類（ＩＰＣ）Int.Cl. A63F13/12(2006.01)i, A63F13/00(2006.01)i, A63F13/06(2006.01)i

出願人（氏名又は名称）
任天堂株式会社

１．この見解書は次の内容を含む。

- ☑ 第Ⅰ欄　見解の基礎
- ☐ 第Ⅱ欄　優先権
- ☐ 第Ⅲ欄　新規性、進歩性又は産業上の利用可能性についての見解の不作成
- ☐ 第Ⅳ欄　発明の単一性の欠如
- ☑ 第Ⅴ欄　ＰＣＴ規則43の2.1(a)(i)に規定する新規性、進歩性又は産業上の利用可能性についての見解、それを裏付けるための文献及び説明
- ☐ 第Ⅵ欄　ある種の引用文献
- ☐ 第Ⅶ欄　国際出願の不備
- ☐ 第Ⅷ欄　国際出願に対する意見

２．今後の手続き
国際予備審査の請求がされた場合は、出願人がこの国際調査機関とは異なる国際予備審査機関を選択し、かつ、その国際予備審査機関がＰＣＴ規則66.1の2(b)の規定に基づいて国際調査機関の見解書を国際予備審査機関の見解書とみなさない旨を国際事務局に通知していた場合を除いて、この見解書は国際予備審査機関の最初の見解書とみなされる。

この見解書が上記のように国際予備審査機関の見解書とみなされる場合、様式ＰＣＴ／ＩＳＡ／２２０を送付した日から３月又は優先日から２２月のうちいずれか遅く満了する期限が経過するまでに、出願人は国際予備審査機関に、適当な場合は補正書とともに、答弁書を提出することができる。

さらなる選択肢は、様式ＰＣＴ／ＩＳＡ／２２０を参照すること。

３．さらなる詳細は、様式ＰＣＴ／ＩＳＡ／２２０の備考を参照すること。

見解書を作成した日
２８．０２．２０１１

名称及びあて先 日本国特許庁（ＩＳＡ／ＪＰ） 郵便番号１００－８９１５ 東京都千代田区霞が関三丁目４番３号	特許庁審査官（権限のある職員） 植田　泰郎 電話番号　０３－３５８１－１１０１　内線　３２３７	２Ｂ　３９２１

国際調査機関の見解書

国際出願番号　ＰＣＴ／ＪＰ２０１１／０００５６６

第Ⅰ欄　見解の基礎

1．言語に関し、この見解書は以下のものに基づき作成した。

☑ 出願時の言語による国際出願

☐ 出願時の言語から国際調査のための言語である ＿＿＿＿＿＿ 語に翻訳された、この国際出願の翻訳文（ＰＣＴ規則12.3(a)及び23.1(b)）

2．☐ この見解書は、ＰＣＴ規則 91 の規定により国際調査機関が認めた又は国際調査機関に通知された明らかな誤りの訂正を考慮して作成した（ＰＣＴ規則 43 の 2.1(b)）。

3．この国際出願で開示されたヌクレオチド又はアミノ酸配列に関して、提出された以下の配列表に基づき見解書を作成した。

a．提出手段　☐ 紙形式

☐ 電子形式

b．提出時期　☐ 出願時の国際出願に含まれていたもの

☐ この国際出願と共に電子形式により提出されたもの

☐ 出願後に、調査のために、この国際調査機関に提出されたもの

4．☐ さらに、複数の版の配列表又は配列表の写しを提出した場合、出願後に提出した配列の写し若しくは追加して提出した配列の写しが、出願時に提出した配列と同一である旨又は出願時の開示を超える事項を含まない旨の陳述書の提出があった。

5．補足意見：

国際調査機関の見解書

国際出願番号　ＰＣＴ／ＪＰ２０１１／０００５６６

第Ｖ欄　新規性、進歩性又は産業上の利用可能性についてのＰＣＴ規則４３の２．１(a)(i)に定める見解、それを裏付ける文献及び説明

１．　見解

新規性（Ｎ）	請求項	１－１５	有
	請求項		無
進歩性（ＩＳ）	請求項	１－１５	有
	請求項		無
産業上の利用可能性（ＩＡ）	請求項	１－１５	有
	請求項		無

２．　文献及び説明

請求項１－１５に係る発明は、国際調査報告で引用されたいずれの文献にも記載されておらず、赤外線を発光可能な赤外発光部を備え、ゲーム装置から圧縮画像データを逐次受信し、圧縮画像データを逐次伸張してゲーム画像を得、伸張によって得られたゲーム画像を逐次表示する可搬型の表示装置、は当業者にとって自明なものではない。

PATENT COOPERATION TREATY

From the
INTERNATIONAL SEARCHING AUTHORITY

To:

TAKAYAMA, Yoshinari
NippoShinOsakaDaiIchi Bldg. #206 4-7-20,
Nishinakajima, Yodogawa-ku, Osaka-shi,
Osaka
532-0011
Japan

PCT

WRITTEN OPINION OF THE
INTERNATIONAL SEARCHING AUTHORITY

(PCT Rule 43*bis*.1)

Date of mailing *(day/month/year)*	08.03.2011
Applicant's or agent's file reference: FNP2140WO	**FOR FURTHER ACTION** See paragraph 2 below

International application No.	International filing date *(day/month/year)*	Priority date *(day/month/year)*
PCT/JP2011/000566	02.02.2011	03.02.2010

International Patent Classification (IPC) or both national classification and IPC
A63F13/12(2006.01)i, A63F13/00(2006.01)i, A63F13/06(2006.01)i

Applicant
Nintendo Co., Ltd.

1. This opinion contains indications relating to the following items:

- [x] Box No. I Basis of the opinion
- [ ] Box No. II Priority
- [ ] Box No. III Non-establishment of opinion with regard to novelty, inventive step and industrial applicability
- [ ] Box No. IV Lack of unity of invention
- [x] Box No. V Reasoned statement under Rule 43*bis*.1(a)(i) with regard to novelty, inventive step and industrial applicability; citations and explanations supporting such statement
- [ ] Box No. VI Certain documents cited
- [ ] Box No. VII Certain defects in the international application
- [ ] Box No. VIII Certain observations on the international application

2. **FURTHER ACTION**

If a demand for international preliminary examination is made, this opinion will be considered to be a written opinion of the International Preliminary Examining Authority ("IPEA") except that this does not apply where the applicant chooses an Authority other than this one to be the IPEA and the chosen IPEA has notified the International Bureau under Rule 66.1*bis*(b) that written opinions of this International Searching Authority will not be so considered.

If this opinion is, as provided above, considered to be a written opinion of the IPEA, the applicant is invited to submit to the IPEA a written reply together, where appropriate, with amendments, before the expiration of 3 months from the date of mailing of Form PCT/ISA/220 or before the expiration of 22 months from the priority date, whichever expires later.

For further options, see Form PCT/ISA/220.

Name and mailing address of the ISA/	Date of completion of this opinion	Authorized officer
JAPAN PATENT OFFICE 3-4-3, Kasumigaseki, Chiyoda-ku, Tokyo 100-8915	28.02.2011	Taiki Ueda
Facsimile No.		Telephone No. 03-3581-1101 extention 3237

WRITTEN OPINION OF THE INTERNATIONAL SEARCHING AUTHORITY

International application No.
PCT/JP2011/000566

Box No. 1 Basis of this opinion

1. With regard to the **language**, this opinion has been established on the basis of:

   ☒ the international application in the language in which it was filed.

   ☐ a translation of the international application into _____ which is the language of a translation furnished for the purposes of international search (Rules 12.3(a) and 23.1(b)).

2. ☐ This opinion has been established taking into account the **rectification of an obvious mistake** authorized by or notified to this Authority under Rule 91 (Rule 43*bis*.1(a))

3. With regard to any **nucleotide and/or amino acid sequence** disclosed in the international application, this opinion has been established on the basis of a sequence listing filed or furnished:

   a. (means)

   ☐ on paper

   ☐ in electronic form

   b. (time)

   ☐ in the international application as filed

   ☐ together with the international application in electronic form

   ☐ subsequently to this Authority for the purposes of search

4. ☐ In addition, in the case that more than one version or copy of a sequence listing has been filed or furnished, the required statements that the information in the subsequent or additional copies is identical to that in the application as filed or does not go beyond the application as filed, as appropriate, were furnished.

5. Additional comments:

WRITTEN OPINION OF THE
INTERNATIONAL SEARCHING AUTHORITY

International application No.
PCT/JP2011/000566

Box No. V **Reasoned statement under Rule 43*bis*.1(a)(i) with regard to novelty, inventive step and industrial applicability; citations and explanations supporting such statement**

1. Statement

Novelty (N)	Claims	1—15	YES
	Claims		NO
Inventive step (IS)	Claims	1—15	YES
	Claims		NO
Industrial applicability (IA)	Claims	1—15	YES
	Claims		NO

2. Citations and explanations:

The inventions in claim 1 to 15 are not described in any documents cited in International Search Report. The portable display device which is comprising an infrared light-emitting portion capable of emitting infrared light, successively receiving the compressed image data from the game device, successively expanding the compressed image data to obtain the game image, and successively displaying the game image obtained by the expansion is not obvious for a person skilled in the art.

PATENT COOPERATION TREATY PCT/JP2011/000566

From the INTERNATIONAL BUREAU

PCT

NOTIFICATION CONCERNING SUBMISSION, OBTENTION OR TRANSMITTAL OF PRIORITY DOCUMENT

(PCT Administrative Instructions, Section 411)

To:

受領 11.4.05 高山

TAKAYAMA, Yoshinari
NippoShinOsakaDaiichi Bldg. #206, 4-7-20,
Nishinakajima, Yodogawa-ku, Osaka-shi, Osaka
5320011
JAPON

Date of mailing *(day/month/year)* 18 March 2011 (18.03.2011)	
Applicant's or agent's file reference FNP2140WO	**IMPORTANT NOTIFICATION**
International application No. PCT/JP2011/000566	International filing date *(day/month/year)* 02 February 2011 (02.02.2011)
International publication date *(day/month/year)* **Not yet published**	Priority date *(day/month/year)* 03 February 2010 (03.02.2010)
Applicant NINTENDO CO., LTD. et al	

The applicant is hereby notified of the date of receipt (or of obtaining by the International Bureau) of the priority document(s) relating to all earlier application(s) whose priority is claimed. Unless otherwise indicated by the letters "NR", in the right-hand column or by an asterisk appearing next to the date of receipt, the priority document concerned was submitted or transmitted to or obtained by the International Bureau in compliance with Rule 17.1(a), (b) or (b-*bis*). This Form replaces any previously issued notification concerning submission, transmittal or obtaining of priority documents.

Priority date	Priority application No.	Country or regional Office or PCT receiving Office	Date of receipt of priority document
03 February 2010 (03.02.2010)	2010-022022	JP	16 March 2011 (16.03.2011)
03 February 2010 (03.02.2010)	2010-022023	JP	16 March 2011 (16.03.2011)
06 August 2010 (06.08.2010)	2010-177893	JP	16 March 2011 (16.03.2011)
20 August 2010 (20.08.2010)	2010-185315	JP	16 March 2011 (16.03.2011)
30 August 2010 (30.08.2010)	2010-192220	JP	16 March 2011 (16.03.2011)
30 August 2010 (30.08.2010)	2010-192221	JP	16 March 2011 (16.03.2011)
01 November 2010 (01.11.2010)	2010-245298	JP	16 March 2011 (16.03.2011)
01 November 2010 (01.11.2010)	2010-245299	JP	16 March 2011 (16.03.2011)

The **letters "NR"** denote **a priority document which, on the date of mailing of this Form, had not yet been received or obtained by the International Bureau** in compliance with Rule 17.1(a), (b) or (b-*bis*). Where the applicant has failed to either submit, request to transmit or obtain and transmit the priority document within the applicable time limit under that Rule, **the attention of the applicant** is directed to Rule 17.1(c) which provides that no designated Office may disregard the priority claim concerned before giving the applicant an opportunity, upon entry into the national phase, to furnish the priority document within a time limit which is reasonable under the circumstances.

An asterisk "*" next to a date of receipt, denotes **a priority document submitted or transmitted to or obtained by the International Bureau but not in compliance with Rule 17.1(a), (b) or (b-*bis*)** (the priority document was received after the time limit prescribed in Rule 17.1(a); the request to prepare and transmit the priority document was submitted to the receiving Office after the applicable time limit under Rule 17.1(b) or the request to the receiving Office or the International Bureau to obtain the priority document was made after the applicable time limit under Rule 17.1(b-*bis*)). Even though the priority document was not furnished in compliance with Rule 17.1(a), (b) or (b-*bis*), the International Bureau will nevertheless transmit a copy of the document to the designated Offices, for their consideration. In case such a copy is not accepted by the designated Office as the priority document, Rule 17.1(c) provides that no designated Office may disregard the priority claim concerned before giving the applicant an opportunity, upon entry into the national phase, to furnish the priority document within a time limit which is reasonable under the circumstances.

The International Bureau of WIPO 34, chemin des Colombettes 1211 Geneva 20, Switzerland Facsimile No. +41 22 338 70 10	Authorized officer Masashi Honda e-mail pt08.pct@wipo.int Telephone No. +41 22 338 74 08

特 許 庁 長 官

受領書

以下の書類を受領しました。

国際出願番号	PCT/JP2011/000566
受領日	2011年02月02日
受理官庁	日本国特許庁
書類記号	FNP2140WO
出願人	任天堂株式会社
発明の名称	表示装置、ゲームシステム、およびゲーム処理方法
メッセージダイジェスト	3D:A7:D0:6E:FE:A8:AF:AD:FD:90:31:A0:D6:C4:19:60:95:C3:A1:57
出願方法	インターネット

/日本国特許庁/

U.S. APPLICATION NO. 13/145,690
ATTORNEY DOCKET NO. RYM-723-3133

COPY OF ALL CLAIMS ALONG WITH AN ENGLISH TRANSLATION THEREOF AND STATEMENT OF ACCURACY

(ATTACHMENT 1.b. and 1.c. of form PTO/SB/20PCT-JP(05-10)

Certificate of Verification

I, Masahiro OZAWA

of NippoShinOsakaDaiIchi Bldg. #206 4-7-20, Nishinakajima, Yodogawa-ku, Osaka-shi, Osaka 532-0011 Japan

state that the attached document is a true and complete translation to the best of my knowledge of claims in International Patent Application

No. PCT/JP2011/000566

Dated this 20th day of July 2011

Signature of translator: Masahiro Ozawa

CLAIMS

1. A game system comprising a home-console type game device, a controller device and a portable display device,

the game device comprising:

an operation data reception section for receiving operation data from the controller device;

a game process section for performing a game process based on the operation data;

a game image generation section for successively generating a first game image based on the game process;

a game image compression section for successively compressing the first game image to generate compressed image data; and

a data transmission section for successively wirelessly transmitting the compressed image data to the portable display device,

the controller device comprising:

an image-capturing section capable of detecting infrared light;

an inertia sensor;

at least one operation button; and

an operation data transmission section for wirelessly transmitting the operation data to the game device, wherein the operation data includes data representing a detection

result from the image-capturing section, data representing a detection result from the inertia sensor, and data representing an operation performed on the operation button,

the portable display device comprising:

an infrared light-emitting portion capable of emitting infrared light;

a game image reception section for successively receiving the compressed image data from the game device;

a game image expansion section for successively expanding the compressed image data to obtain the first game image; and

a display section for successively displaying the first game image obtained by the expansion.

2. The game system according to claim 1, wherein:

the game system further comprises a marker device capable of emitting infrared light;

the game image generation section further generates a second game image based on the game process; and

the game device further comprises:

an image outputting section for successively outputting the second game image to an external display device which is separate from the portable display device; and

a light emission control section for controlling the light emission of the marker device.

3. The game system according to claim 2, wherein:

the game system includes two controller devices; and

the game process section performs the game process based on the operation data received from the controller devices.

4. The game system according to claim 2 or 3, wherein the light emission control section controls the light emission of the marker device and the infrared light-emitting portion in accordance with content of the game process.

5. The game system according to claim 4, wherein:

the light emission control section generates control data representing control instructions for the light emission of the infrared light-emitting portion;

the data transmission section wirelessly transmits the control data to the portable display device;

the portable display device further comprises a control data reception section for receiving the control data from the game device; and

the infrared light-emitting portion operates based on the received control data.

6. A portable display device capable of wirelessly communicating with a game device, wherein:

the game device receives, from a controller device including an image-capturing section capable of detecting infrared light, data representing a detection result of the image-capturing section, and successively transmits, to the display device, compressed image data which is obtained by compressing a game image generated based on a game process performed based on the data; and

the display device comprises:

an infrared light-emitting portion capable of emitting infrared light;

a game image reception section for successively receiving the compressed image data from the game device;

a game image expansion section for successively expanding the compressed image data to obtain the game image; and

a display section for successively displaying the game image obtained by the expansion.

7. The display device according to claim 6, further comprising:

a touch panel provided on a screen of the display section;

an inertia sensor; and

an operation data transmission section for wirelessly transmitting to the game device operation data including output data of the touch panel and the inertia sensor,

wherein the game device performs the game process based

on the operation data.

8. The display device according to claim 6 or 7, wherein:

the game device wirelessly transmits a game sound generated based on the game process to the display device; and

the game device further comprises:

a game sound reception section for receiving the game sound from the game device; and

a speaker for outputting the game sound received by the game sound reception section.

9. The display device according to any one of claims 6 to 8, wherein:

the display device further comprises a microphone; and

the operation data transmission section further wirelessly transmits data of sound detected by the microphone to the game device.

10. The display device according to any one of claims 6 to 9, further comprising:

a camera; and

a camera image compression section for compressing a camera image captured by the camera to generate compressed captured image data,

wherein the operation data transmission section further

wirelessly transmits the compressed captured image data to the game device.

11. The display device according to any one of claims 6 to 10, comprising:

a plurality of front surface operation buttons provided on a front surface of the display device, on which a screen of the display section is provided, on opposite sides of the screen; and

direction input sections capable of specifying directions, provided on the front surface on opposite sides of the screen,

wherein the operation data further comprises data representing operations performed on the plurality of front surface operation buttons and the direction input sections.

12. The display device according to any one of claims 6 to 11, further comprising:

a plurality of back surface operation buttons provided on a back surface of the display device opposite to a front surface of the display device, on which the screen of the display section is provided; and

a plurality of side surface operation buttons provided on a side surface between the front surface and the back surface,

wherein the operation data further comprises data representing operations performed on the plurality of back surface

operation buttons and the side surface operation buttons.

13. The display device according to any one of claims 6 to 12, further comprising a magnetic sensor,

wherein the operation data further comprises data of a detection result of the magnetic sensor.

14. The display device according to any one of claims 6 to 13, wherein the inertia sensor includes a 3-axis acceleration sensor and a 3-axis gyrosensor.

15. A game process method carried out in a game system comprising a home-console type game device, a controller device and a portable display device, wherein:

the portable display device comprises an infrared light-emitting portion capable of emitting infrared light;

the controller device includes an image-capturing section capable of detecting infrared light, an inertia sensor and at least one operation button, and performs an operation data transmission step of wirelessly transmitting operation data to the game device, wherein the operation data includes data representing a detection result of the image-capturing section, data representing a detection result of the inertia sensor, and data representing an operation performed on the operation button;

the game device performs:

an operation data reception step of receiving operation data from the controller device;

a game process step of performing a game process based on the operation data;

a game image generation step of successively generating a first game image based on the game process;

a game image compression step of successively compressing the first game image to generate compressed image data; and

a data transmission step of successively wirelessly transmitting the compressed image data to the portable display device; and

the portable display device performs:

a game image reception step of successively receiving the compressed image data from the game device;

a game image expansion step of successively expanding the compressed image data to obtain the first game image; and

a display step of successively displaying the first game image obtained by the expansion.

請求の範囲

[請求項1]　据置型のゲーム装置と、操作装置と、可搬型表示装置とを含むゲームシステムであって、

前記ゲーム装置は、

前記操作装置から操作データを受信する操作データ受信部と、

前記操作データに基づいてゲーム処理を実行するゲーム処理部と、

前記ゲーム処理に基づいて第１ゲーム画像を逐次生成するゲーム画像生成部と、

前記第１ゲーム画像を逐次圧縮して圧縮画像データを生成するゲーム画像圧縮部と、

前記圧縮画像データを前記可搬型表示装置へ無線で逐次送信するデータ送信部とを備え、

前記操作装置は、

赤外光を検知可能な撮像部と、

慣性センサと、

少なくとも１つの操作ボタンと、

前記撮像部による検知結果を表すデータと、前記慣性センサの検出結果を表すデータと、前記操作ボタンに対する操作を表すデータとを含む操作データを前記ゲーム装置へ無線で送信する操作データ送信部とを備え、

前記可搬型表示装置は、

赤外線を発光可能な赤外発光部と、

前記ゲーム装置から前記圧縮画像データを逐次受信するゲーム画像受信部と、

前記圧縮画像データを逐次伸張して前記第１ゲーム画像を得るゲーム画像伸張部と、

伸張によって得られた前記第１ゲーム画像を逐次表示する表示部

とを備える、ゲームシステム。

[請求項2]　前記ゲームシステムは、赤外光を発光可能なマーカ装置をさらに含み、

前記ゲーム画像生成部は、前記ゲーム処理に基づいて第２ゲーム画像をさらに生成し、

前記ゲーム装置は、

前記可搬型表示装置とは別体の外部表示装置へ前記第２ゲーム画像を逐次出力する画像出力部と、

前記マーカ装置の発光を制御する発光制御部とをさらに備える、請求項１に記載のゲームシステム。

[請求項3]　前記ゲームシステムは、２つの操作装置を含み、

前記ゲーム処理部は、各操作装置から受信した操作データに基づいてゲーム処理を実行する、請求項２に記載のゲームシステム。

[請求項4]　前記発光制御部は、前記ゲーム処理の内容に応じて前記マーカ装置および前記赤外発光部の発光を制御する、請求項２または請求項３に記載のゲームシステム。

[請求項5]　前記発光制御部は、前記赤外発光部による発光に対する制御指示を表す制御データを生成し、

前記データ送信部は、前記制御データを前記前記可搬型表示装置へ無線で送信し、

前記可搬型表示装置は、前記ゲーム装置から前記制御データを受信する制御データ受信部をさらに備え、

前記赤外発光部は、受信された制御データに従って動作する、請求項４に記載のゲームシステム。

[請求項6]　ゲーム装置と無線通信可能な可搬型の表示装置であって、

前記ゲーム装置は、赤外光を検知可能な撮像部を備える操作装置から前記撮像部による検知結果を表すデータを受信し、当該データに基づいて実行されるゲーム処理に基づいて生成されるゲーム画像を圧縮

した圧縮画像データを前記表示装置へ逐次送信し、

前記表示装置は、

赤外線を発光可能な赤外発光部と、

前記ゲーム装置から前記圧縮画像データを逐次受信するゲーム画像受信部と、

前記圧縮画像データを逐次伸張して前記ゲーム画像を得るゲーム画像伸張部と、

伸張によって得られたゲーム画像を逐次表示する表示部とを備える、表示装置。

[請求項7] 前記表示部の画面に設けられるタッチパネルと、

慣性センサと、

前記タッチパネルおよび前記慣性センサの出力データを含む操作データを前記ゲーム装置へ無線で送信する操作データ送信部とをさらに備え、

前記ゲーム装置は、前記操作データに基づいて前記ゲーム処理を実行する、請求項６に記載の表示装置。

[請求項8] 前記ゲーム装置は、前記ゲーム処理に基づいて生成されるゲーム音声を前記表示装置へ無線で送信し、

前記ゲーム音声を前記ゲーム装置から受信するゲーム音声受信部と、

前記ゲーム音声受信部によって受信されたゲーム音声を出力するスピーカとをさらに備える、請求項６または請求項７に記載の表示装置。

[請求項9] 前記表示装置はマイクをさらに備え、

前記操作データ送信部は、前記マイクが検知した音のデータを前記ゲーム装置へ無線でさらに送信する、請求項６から請求項８のいずれか１項に記載の表示装置。

[請求項10] カメラと、

前記カメラが撮像したカメラ画像を圧縮して圧縮撮像データを生成するカメラ画像圧縮部とをさらに備え、

前記操作データ送信部は、前記圧縮撮像データを前記ゲーム装置へ無線でさらに送信する、請求項６から請求項９のいずれか１項に記載の表示装置。

[請求項11]　前記表示部の画面が設けられる表平面において当該画面の両側に設けられる複数の表面操作ボタンと、

前記表平面において前記画面の両側に設けられ、方向を指示可能な方向入力部とを備え、

前記操作データは、前記複数の表面操作ボタンおよび前記方向入力部に対する操作を表すデータをさらに含む、請求項６から請求項１０のいずれか１項に記載の表示装置。

[請求項12]　前記表示部の画面が設けられる表平面の反対側の裏平面に設けられる複数の裏面操作ボタンと、

前記表平面と前記裏平面との間の側面に設けられる複数の側面操作ボタンとをさらに備え、

前記操作データは、前記複数の裏面操作ボタンおよび側面操作ボタンに対する操作を表すデータをさらに含む、請求項６から請求項１１のいずれか１項に記載の表示装置。

[請求項13]　磁気センサをさらに備え、

前記操作データは前記磁気センサの検出結果のデータをさらに含む、請求項６から請求項１２のいずれか１項に記載の表示装置。

[請求項14]　前記慣性センサは、３軸の加速度センサおよび３軸のジャイロセンサである、請求項６から請求項１３のいずれか１項に記載の表示装置。

[請求項15]　据置型のゲーム装置と、操作装置と、可搬型表示装置とを含むゲームシステムにおいて実行されるゲーム処理方法であって、

前記可搬型表示装置は、赤外線を発光可能な赤外発光部を備えてお

り、

前記操作装置は、赤外光を検知可能な撮像部と、慣性センサと、少なくとも１つの操作ボタンとを備え、前記撮像部による検知結果を表すデータと、前記慣性センサの検出結果を表すデータと、前記操作ボタンに対する操作を表すデータとを含む操作データを前記ゲーム装置へ無線で送信する操作データ送信ステップを実行し、

前記ゲーム装置は、

前記操作装置から操作データを受信する操作データ受信ステップと、

前記操作データに基づいてゲーム処理を実行するゲーム処理ステップと、

前記ゲーム処理に基づいて第１ゲーム画像を逐次生成するゲーム画像生成ステップと、

前記第１ゲーム画像を逐次圧縮して圧縮画像データを生成するゲーム画像圧縮ステップと、

前記圧縮画像データを前記可搬型表示装置へ無線で逐次送信するデータ送信ステップとを実行し、

前記可搬型表示装置は、

前記ゲーム装置から前記圧縮画像データを逐次受信するゲーム画像受信ステップと、

前記圧縮画像データを逐次伸張して前記第１ゲーム画像を得るゲーム画像伸張ステップと、

伸張によって得られた前記第１ゲーム画像を逐次表示する表示ステップとを実行する、ゲーム処理方法。

特許協力条約

ＰＣＴ

国際調査報告

（法８条、法施行規則第40、41条）
〔ＰＣＴ18条、ＰＣＴ規則43、44〕

受領 '11.3.09 高山

出願人又は代理人の書類記号 FNP2140W0	今後の手続きについては、様式ＰＣＴ／ＩＳＡ／２２０及び下記５を参照すること。	
国際出願番号 ＰＣＴ／ＪＰ２０１１／０００５６６	国際出願日 (日.月.年) ０２．０２．２０１１	優先日 (日.月.年) ０３．０２．２０１０
出願人（氏名又は名称） 任天堂株式会社		

国際調査機関が作成したこの国際調査報告を法施行規則第41条（ＰＣＴ18条）の規定に従い出願人に送付する。
この写しは国際事務局にも送付される。

この国際調査報告は、全部で ３ ページである。

☐ この調査報告に引用された先行技術文献の写しも添付されている。

１．国際調査報告の基礎
ａ．言語に関し、この国際調査は以下のものに基づき行った。
☑ 出願時の言語による国際出願
☐ 出願時の言語から国際調査のための言語である ＿＿＿＿＿＿ 語に翻訳された、この国際出願の翻訳文（ＰＣＴ規則12.3(a)及び23.1(b)）

ｂ．☐ この国際調査報告は、ＰＣＴ規則91の規定により国際調査機関が認めた又は国際調査機関に通知された明らかな誤りの訂正を考慮して作成した（ＰＣＴ規則43.6の2(a)）。

ｃ．☐ この国際出願は、ヌクレオチド又はアミノ酸配列を含んでいる（第Ｉ欄参照）。

２．☐ 請求の範囲の一部の調査ができない（第Ⅱ欄参照）。

３．☐ 発明の単一性が欠如している（第Ⅲ欄参照）。

４．発明の名称は ☑ 出願人が提出したものを承認する。
☐ 次に示すように国際調査機関が作成した。

＿＿＿＿＿＿＿＿＿＿＿＿＿＿＿＿

５．要約は ☑ 出願人が提出したものを承認する。
☐ 第Ⅳ欄に示されているように、法施行規則第47条第１項（ＰＣＴ規則38.2）の規定により国際調査機関が作成した。出願人は、この国際調査報告の発送の日から１月以内にこの国際調査機関に意見を提出することができる。

６．図面に関して
ａ．要約書とともに公表される図は、
第 １ 図とする。 ☑ 出願人が示したとおりである。
☐ 出願人は図を示さなかったので、国際調査機関が選択した。
☐ 本図は発明の特徴を一層よく表しているので、国際調査機関が選択した。

ｂ．☐ 要約とともに公表される図はない。

国際調査報告

国際出願番号　ＰＣＴ／ＪＰ２０１１／０００５６６

Ａ．　発明の属する分野の分類（国際特許分類（ＩＰＣ））

Int.Cl.　A63F13/12(2006.01)i, A63F13/00(2006.01)i, A63F13/06(2006.01)i

Ｂ．　調査を行った分野

調査を行った最小限資料（国際特許分類（ＩＰＣ））

Int.Cl.　A63F13/00-13/12, A63F9/24

最小限資料以外の資料で調査を行った分野に含まれるもの

日本国実用新案公報	１９２２－１９９６年
日本国公開実用新案公報	１９７１－２０１１年
日本国実用新案登録公報	１９９６－２０１１年
日本国登録実用新案公報	１９９４－２０１１年

国際調査で使用した電子データベース（データベースの名称、調査に使用した用語）

Ｃ．　関連すると認められる文献

引用文献のカテゴリー＊	引用文献名　及び一部の箇所が関連するときは、その関連する箇所の表示	関連する請求項の番号
A	JP 2009-247763 A (株式会社バンダイナムコゲームス) 2009.10.29, 全文（ファミリーなし）	1-15
A	JP 9-294260 A (株式会社セガ・エンタープライゼス) 1997.11.11, 段落【００４５】、【００５６】、【００９９】－【０１４９】（ファミリーなし）	1-15

☑　Ｃ欄の続きにも文献が列挙されている。

☐　パテントファミリーに関する別紙を参照。

＊　引用文献のカテゴリー

「Ａ」特に関連のある文献ではなく、一般的技術水準を示すもの

「Ｅ」国際出願日前の出願または特許であるが、国際出願日以後に公表されたもの

「Ｌ」優先権主張に疑義を提起する文献又は他の文献の発行日若しくは他の特別な理由を確立するために引用する文献（理由を付す）

「Ｏ」口頭による開示、使用、展示等に言及する文献

「Ｐ」国際出願日前で、かつ優先権の主張の基礎となる出願の日の後に公表された文献

「Ｔ」国際出願日又は優先日後に公表された文献であって出願と矛盾するものではなく、発明の原理又は理論の理解のために引用するもの

「Ｘ」特に関連のある文献であって、当該文献のみで発明の新規性又は進歩性がないと考えられるもの

「Ｙ」特に関連のある文献であって、当該文献と他の１以上の文献との、当業者にとって自明である組合せによって進歩性がないと考えられるもの

「&」同一パテントファミリー文献

国際調査を完了した日 ２８．０２．２０１１	国際調査報告の発送日 ０８．０３．２０１１
国際調査機関の名称及びあて先 日本国特許庁（ＩＳＡ／ＪＰ） 郵便番号１００－８９１５ 東京都千代田区霞が関三丁目４番３号	特許庁審査官（権限のある職員）　２Ｂ　３９２１ 植田　泰輝 電話番号　０３－３５８１－１１０１　内線　３２３７

C（続き）．　関連すると認められる文献

引用文献のカテゴリー＊	引用文献名　及び一部の箇所が関連するときは、その関連する箇所の表示	関連する請求項の番号
A	JP 2009-178363 A（株式会社バンダイナムコゲームス）2009.08.13, 段落【００３２】－【００３６】（ファミリーなし）	7-14
A	JP 2010-17412 A（任天堂株式会社）2010.01.28, 段落【００４２】－【００６４】 & US 2010/0007926 A & EP 2158947 A2	10-14
A	JP 2004-32548 A（アルプス電気株式会社）2004.01.29, 段落【０００９】、【００１７】（ファミリーなし）	12-14

PTO/SB/20PCT-AU (01-11)
Approved for use through 01/31/2012. OMB 0651-0058
U.S. Patent and Trademark Office; U. S. DEPARTMENT OF COMMERCE
Under the Paperwork Reduction Act of 1995, no persons are required to respond to a collection of information unless it displays a valid OMB control number.

REQUEST FOR PARTICIPATION IN THE PATENT COOPERATION TREATY - PATENT PROSECUTION HIGHWAY (PCT-PPH) PILOT PROGRAM BETWEEN THE IP AUSTRALIA (IPAU) AND THE USPTO

Application No:		Filing date:	
First Named Inventor:	David T. Scadden		
Title of the Invention:	METHODS FOR EXPANSION OF HEMATOPOIETIC STEM AND PROGENITOR CELLS		

THIS REQUEST FOR PARTICIPATION IN THE PCT-PPH PILOT PROGRAM ALONG WITH THE REQUIRED DOCUMENTS MUST BE SUBMITTED VIA EFS-WEB. INFORMATION REGARDING EFS-WEB IS AVAILABLE AT HTTP://WWW.USPTO.GOV/EBC/EFS_HELP.HTML

APPLICANT HEREBY REQUESTS PARTICIPATION IN THE PCT-PPH PROGRAM AND PETITIONS TO MAKE THE ABOVE-IDENTIFIED APPLICATION SPECIAL UNDER THE PCT-PPH PROGRAM.

The above-identified application is (1) a national stage entry of the corresponding PCT application, or (2) a national stage entry of another PCT application which claims priority to the corresponding PCT application, or (3) a national application that claims domestic/ foreign priority to the corresponding PCT application, or (4) a national application which forms the basis for the priority claim in the corresponding PCT application, or (5) a continuing application of a U.S. application that satisfies one of (1) to (4) above, or (6) a U.S. application that claims domestic benefit to a U.S. provisional application which forms the basis for the priority claim in the corresponding PCT application.

The corresponding PCT application number(s) is/are: PCT/US2010/021638

The international filing date of the corresponding PCT application(s) is/are: January 21, 2010

I. List of Required Documents:

a. **A copy of the latest international work product (WO/ISA, WO/IPEA, or IPER) in the above–identified corresponding PCT application(s)**

- [✔] Is attached.
- [ ] Is not attached because the document is already in the U.S. application.

b. **A copy of all claims which were indicated as having novelty, inventive step and industrial applicability in the above-identified corresponding PCT application(s).**

- [ ] Is attached.
- [✔] Is not attached because the document is already in the U.S. application.

c. **English translations of the documents in a. and b. above are attached (if the documents are not in the English language). A statement that the English translation is accurate is attached for the document in b. above.**

This collection of information is required by 35 U.S.C. 119, 37 CFR 1.55, and 37 CFR 1.102(d). The information is required to obtain or retain a benefit by the public, which is to file (and by the USPTO to process) an application. Confidentiality is governed by 35 U.S.C. 122 and 37 CFR 1.11 and 1.14. This collection is estimated to take 2 hours to complete, including gathering, preparing, and submitting the completed application form to the USPTO. Time will vary depending upon the individual case. Any comments on the amount of time you require to complete this form and/or suggestions for reducing this burden should be sent to the Chief Information Officer, U.S. Patent and Trademark Office, U.S. Department of Commerce, P.O. Box 1450, Alexandria, VA 22313-1450. DO NOT SEND FEES OR COMPLETED FORMS TO THIS ADDRESS.

Under the Paperwork Reduction Act of 1995, no persons are required to respond to a collection of information unless it displays a valid OMB control number.

REQUEST FOR PARTICIPATION IN THE PCT-PPH PILOT PROGRAM BETWEEN THE IPAU AND THE USPTO

(continued)

Application No.:	
First Named Inventor:	David T. Scadden

d. **(1) An information disclosure statement listing the documents cited in the international work products (ISR, WO/ISA, WO/IPEA, IPER) of the corresponding PCT application.**

☑ Is attached

☐ Has already been filed in the above-identified U.S. application on _____

(2) Copies of all documents (except) for U.S. patents or U.S. patent application publications)

☑ Are attached.

☐ Have already been filed in the above-identified U.S. application on _____

II. Claims Correspondence Table:

Claims in US Application	Patentable Claims in the corresponding PCT Application	Explanation regarding the correspondence
1-3	1-3	exact/same as PCT
6-10	6-10	exact/same as PCT
25	25	exact/same as PCT
30-32	30-32	exact/same as PCT
34	34	exact/same as PCT
37-38	37-38	exact/same as PCT
43-47	43-47	exact/same as PCT

III. All the claims in the US application sufficiently correspond to the patentable claims in the corresponding PCT application.

Signature /Tari W. Mills, Reg. No. 61,593/	Date 7/21/11
Name (Print/Typed) Tari W. Mills	Registration Number 61,593

Privacy Act Statement

The **Privacy Act of 1974 (P.L. 93-579)** requires that you be given certain information in connection with your submission of the attached form related to a patent application or patent. Accordingly, pursuant to the requirements of the Act, please be advised that: (1) the general authority for the collection of this information is 35 U.S.C. 2(b)(2); (2) furnishing of the information solicited is voluntary; and (3) the principal purpose for which the information is used by the U.S. Patent and Trademark Office is to process and/or examine your submission related to a patent application or patent. If you do not furnish the requested information, the U.S. Patent and Trademark Office may not be able to process and/or examine your submission, which may result in termination of proceedings or abandonment of the application or expiration of the patent.

The information provided by you in this form will be subject to the following routine uses:

1. The information on this form will be treated confidentially to the extent allowed under the Freedom of Information Act (5 U.S.C. 552) and the Privacy Act (5 U.S.C 552a). Records from this system of records may be disclosed to the Department of Justice to determine whether disclosure of these records is required by the Freedom of Information Act.
2. A record from this system of records may be disclosed, as a routine use, in the course of presenting evidence to a court, magistrate, or administrative tribunal, including disclosures to opposing counsel in the course of settlement negotiations.
3. A record in this system of records may be disclosed, as a routine use, to a Member of Congress submitting a request involving an individual, to whom the record pertains, when the individual has requested assistance from the Member with respect to the subject matter of the record.
4. A record in this system of records may be disclosed, as a routine use, to a contractor of the Agency having need for the information in order to perform a contract. Recipients of information shall be required to comply with the requirements of the Privacy Act of 1974, as amended, pursuant to 5 U.S.C. 552a(m).
5. A record related to an International Application filed under the Patent Cooperation Treaty in this system of records may be disclosed, as a routine use, to the International Bureau of the World Intellectual Property Organization, pursuant to the Patent Cooperation Treaty.
6. A record in this system of records may be disclosed, as a routine use, to another federal agency for purposes of National Security review (35 U.S.C. 181) and for review pursuant to the Atomic Energy Act (42 U.S.C. 218(c)).
7. A record from this system of records may be disclosed, as a routine use, to the Administrator, General Services, or his/her designee, during an inspection of records conducted by GSA as part of that agency's responsibility to recommend improvements in records management practices and programs, under authority of 44 U.S.C. 2904 and 2906. Such disclosure shall be made in accordance with the GSA regulations governing inspection of records for this purpose, and any other relevant (*i.e.*, GSA or Commerce) directive. Such disclosure shall not be used to make determinations about individuals.
8. A record from this system of records may be disclosed, as a routine use, to the public after either publication of the application pursuant to 35 U.S.C. 122(b) or issuance of a patent pursuant to 35 U.S.C. 151. Further, a record may be disclosed, subject to the limitations of 37 CFR 1.14, as a routine use, to the public if the record was filed in an application which became abandoned or in which the proceedings were terminated and which application is referenced by either a published application, an application open to public inspection or an issued patent.
9. A record from this system of records may be disclosed, as a routine use, to a Federal, State, or local law enforcement agency, if the USPTO becomes aware of a violation or potential violation of law or regulation.

UNITED STATES PATENT AND TRADEMARK OFFICE

Commissioner for Patents
United States Patent and Trademark Office
P.O. Box 1450
Alexandria, VA 22313-1450
www.uspto.gov

MAILED

SEP 28 2011

PCT LEGAL ADMINISTRATION

Stephen B. Salai, Esq.
Harter Secrest & Emery LLP
1600 Bausch & Lomb Place
Rochester NY 14604-2711

In re Application of: KNIGHT, Peter, et al.
U.S. Application No.: 13/145,714
PCT Application No.: PCT/GB2010/000045
International Filing Date: 12 January 2010
Priority Date: 22 January 2009
Attorney's Docket No.: 96172.000013
For: ADVERTISING DISPLAY AND METHOD

DECISION ON PETITION UNDER 37 CFR 1.182

This decision is issued in response to the "Petition For Review And Processing By The PCT Legal Office Under 37 CFR 1.182" filed on 07 September 2011. Applicants have paid the required petition fee.

BACKGROUND

On 22 August 2011, this Office mailed a notification indicating that a petition under 37 CFR 1.182 was required to clarify the record as to the correct international application number for the present national stage application. The notification indicated that the original application submission on 21 July 2011 referenced two different international applications, specifically, PCT/GB2010/000045 and PCT/2009/000045.

On 07 September 2011, applicants filed the petition under 37 CFR 1.182 considered herein.

DISCUSSION

The petition filed on 07 September 2011 confirms that the correct international application number for the present national stage application is PCT/GB2010/000045 and that the reference to PCT/GB2009/000045 in the original submission was the result of a typographical error. The petition notes that the correct international application number was present in the initial application materials filed on 21 July 2011 (i.e., in the ADS). In addition, the petition was accompanied by the required petition fee.

Applicants' 07 September 2011 submission satisfies the requirements for a grantable petition under 37 CFR 1.182 to correct the inconsistency in the international application numbers referenced in applicants' 21 July 2011 filing. Accordingly, the application materials filed on 21 July 2011 will be treated as directed to international application of PCT/GB2010/000045. Such

materials, including payment of the U.S. basic national fee, were filed prior to the expiration of thirty months from the priority date of PCT/GB2010/000045, thereby avoiding abandonment of the international application with respect to the United States.

CONCLUSION

The petition under 37 CFR 1.182 is **GRANTED**.

The present application will be treated as the U.S. national stage under 35 U.S.C. 371 of PCT/GB2010/000045.

The application is being referred to the National Stage Processing Branch of the Office of PCT Operations for further processing in accordance with this decision.

/RichardMRoss/

Richard M. Ross
Attorney Advisor
Office of PCT Legal Administration
Telephone: (571) 272-3296

PTO/SB/20PCT-EP (05-10)
Approved for use through 01/31/2012. OMB 0651-0058
U.S. Patent and Trademark Office; U. S. DEPARTMENT OF COMMERCE
Under the Paperwork Reduction Act of 1995, no persons are required to respond to a collection of information unless it displays a valid OMB control number.

REQUEST FOR PARTICIPATION IN THE PATENT COOPERATION TREATY - PATENT PROSECUTION HIGHWAY (PCT-PPH) PILOT PROGRAM BETWEEN THE EUROPEAN PATENT OFFICE (EPO) AND THE USPTO

Application No:	Unknown	Filing date:	Herewith
First Named Inventor:	Alvaro Orjuela		
Title of the Invention:	CARBOXYLIC ACID RECOVERY AND METHODS RELATED THERETO		

THIS REQUEST FOR PARTICIPATION IN THE PCT-PPH PILOT PROGRAM ALONG WITH THE REQUIRED DOCUMENTS MUST BE SUBMITTED VIA EFS-WEB. INFORMATION REGARDING EFS-WEB IS AVAILABLE AT HTTP://WWW.USPTO.GOV/EBC/EFS_HELP.HTML

APPLICANT HEREBY REQUESTS PARTICIPATION IN THE PCT-PPH PROGRAM AND PETITIONS TO MAKE THE ABOVE-IDENTIFIED APPLICATION SPECIAL UNDER THE PCT-PPH PROGRAM.

The above-identified application is (1) a national stage entry of the corresponding PCT application, or (2) a national stage entry of another PCT application which claims priority to the corresponding PCT application, or (3) a national application that claims domestic/ foreign priority to the corresponding PCT application, or (4) a national application which forms the basis for the priority claim in the corresponding PCT application, or (5) a continuing application of a U.S. application that satisfies one of (1) to (4) above, or (6) a U.S. application that claims domestic benefit to a U.S. provisional application which forms the basis for the priority claim in the corresponding PCT application.

The corresponding PCT application number(s) is/are: PCT/US2010/058787

The international filing date of the corresponding PCT application(s) is/are: December 2, 2010

I. List of Required Documents:

a. **A copy of the latest international work product (WO/ISA, WO/IPEA, or IPER) in the above–identified corresponding PCT application(s)**

- [x] Is attached
- [ ] Is not attached because the document is already in the U.S. application.

b. **A copy of all claims which were indicated as having novelty, inventive step and industrial applicability in the above-identified corresponding PCT application(s).**

- [x] Is attached.
- [ ] Is not attached because the document is already in the U.S. application.

c. **English translations of the documents in a. and b. above are attached (if the documents are not in the English language). A statement that the English translation is accurate is attached for the document in b. above.**

This collection of information is required by 35 U.S.C. 119, 37 CFR 1.55, and 37 CFR 1.102(d). The information is required to obtain or retain a benefit by the public, which is to file (and by the USPTO to process) an application. Confidentiality is governed by 35 U.S.C. 122 and 37 CFR 1.11 and 1.14. This collection is estimated to take 2 hours to complete, including gathering, preparing, and submitting the completed application form to the USPTO. Time will vary depending upon the individual case. Any comments on the amount of time you require to complete this form and/or suggestions for reducing this burden should be sent to the Chief Information Officer, U.S. Patent and Trademark Office, U.S. Department of Commerce, P.O. Box 1450, Alexandria, VA 22313-1450. DO NOT SEND FEES OR COMPLETED FORMS TO THIS ADDRESS.

Approved for use through 01/31/2012. OMB 0651-0058
U.S.Patent and Trademark Office; U.S. DEPARTMENT OF COMMERCE
Under the Paperwork Reduction Act of 1995, no persons are required to respond to a collection of information unless it displays a valid OMB control number.

REQUEST FOR PARTICIPATION IN THE PCT-PPH PILOT PROGRAM BETWEEN THE EPO AND THE USPTO

(continued)

Application No.:	Unknown
First Named Inventor:	Alvaro Orjuela

d. **(1) An information disclosure statement listing the documents cited in the international work products (ISR, WO/ISA, WO/IPEA, IPER) of the corresponding PCT application.**

☒ Is attached

☐ Has already been filed in the above-identified U.S. application on _____

(2) Copies of all documents (except) for U.S. patents or U.S. patent application publications)

☒ Are attached.

☐ Have already been filed in the above-identified U.S. application on _____

II. Claims Correspondence Table:

Claims in US Application	Patentable Claims in the corresponding PCT Application	Explanation regarding the correspondence
1-4	1-4	Both claims are the same
5	5	Sufficient correspondence between the claims
6	6	Both claims are the same
7	7	Sufficient correspondence between the claims
8	8	Both claims are the same
9-10	9-10	Sufficient correspondence between the claims
11	11	Both claims are the same
12-13	12-13	Sufficient correspondence between the claims
14	14	Both claims are the same
15-16	15-16	Sufficient correspondence between the claims
17	17	Both claims are the same
18	18	Sufficient correspondence between the claims
19-22	19-22	Both claims are the same

III. All the claims in the US application sufficiently correspond to the patentable claims in the corresponding PCT application.

Signature /Barbara J. Clark/	Date July 21, 2011
Name (Print/Typed) Barbara J. Clark	Registration Number 38,107

UNITED STATES PATENT AND TRADEMARK OFFICE

Commissioner for Patents
United States Patent and Trademark Office
P.O. Box 1450
Alexandria, VA 22313-1450
www.uspto.gov

CLARK IP LAW, PLC
1631 CRESTWOOD CIRCLE
AMES IA 50010

MAILED
FEB 21 2012
OFFICE OF PETITIONS

In re Application of
Alvaro ORJUELA et al
Application No.: 13/145,731
Filed: July 21, 2011
Attorney Docket No.: 3000.009US1
For: CARBOXYLIC ACID RECOVERY AND METHODS RELATED THERETO

: DECISION ON REQUEST TO
: PARTICIPATE IN THE PATENT
: PROSECUTION HIGHWAY
: PROGRAM AND PETITION
: TO MAKE SPECIAL UNDER
: 37 CFR 1.102(a)

This is a decision on the request to participate in the PCT Patent Prosecution Highway (PCT-PPH) pilot program and the petition under 37 CFR 1.102(a), filed on July 21, 2011, to make the above-identified application special.

The request and petition are **GRANTED**.

Discussion

A grantable request to participate in the PCT-PPH pilot program and petition to make special require:

(1) The U.S. application must have an eligible relationship to one or more PCT applications where the ISA or IPEA are the JPO, EPO, KIPO, NPI, Australia, Austria, Russia, Spain, Sweden, Finland, China, or USPTO;

(2) At least one claim in the PCT application has novelty, inventive step, and industrial applicability and must be free of any observations in Box VIII in the latest work product in the international stage or applicant must identify and explain why the claim(s) is/are not subject to the observation in Box VIII;

(3) Applicant must submit a copy of the claim(s) from the PCT application(s) that have novelty, inventive step, and industrial applicability along with an English translation thereof and a statement that the English translation is accurate, if the claims are not in the English language;

(4) All the claims in the U.S. application must sufficiently correspond or be amended to sufficiently correspond to the claim(s) that have novelty, inventive step, and industrial applicability in the PCT application(s);

(5) Examination of the U.S. application has not begun;

(6) Applicant must submit a copy of the latest international work product from the PCT application indicating that the claim(s) have novelty, inventive step, and industrial applicability along with an English translation thereof and a statement that the English translation is accurate if the latest international work product is not in the English language;

(7) Applicant must submit an IDS listing the documents cited by the PCT examiner in the international work product along with copies of documents except U.S. patents or U.S. patent application publications.

The request to participate in the PCT-PPH pilot program and petition comply with the above requirements. Accordingly, the above-identified application has been accorded "special" status.

Telephone inquiries concerning this decision should be directed to the undersigned at (571) 272-0602.

All other inquiries concerning the examination or status of the application is accessible in the PAIR system at http://www.uspto.gov/ebc.index.html.

This application is being referred to Technology Center Art Unit 1621 for action on the merits commensurate with this decision.

Thurman K. Page
Petitions Examiner
Office of Petitions

PTO/SB/20PCT-JP (05-10)
Approved for use through 01/31/2012. OMB 0651-0058
U.S. Patent and Trademark Office; U. S. DEPARTMENT OF COMMERCE
Under the Paperwork Reduction Act of 1995, no persons are required to respond to a collection of information unless it displays a valid OMB control number.

REQUEST FOR PARTICIPATION IN THE PATENT COOPERATION TREATY - PATENT PROSECUTION HIGHWAY (PCT-PPH) PILOT PROGRAM BETWEEN THE JAPAN PATENT OFFICE (JPO) AND THE USPTO

Application No:	13/145,745	Filing date:	July 21, 2011
First Named Inventor:	Takayuki Sugiro		
Title of the Invention:	GAME CONTROL PROGRAM AND GAME DEVICE		

THIS REQUEST FOR PARTICIPATION IN THE PCT-PPH PILOT PROGRAM ALONG WITH THE REQUIRED DOCUMENTS MUST BE SUBMITTED VIA EFS-WEB. INFORMATION REGARDING EFS-WEB IS AVAILABLE AT HTTP://WWW.USPTO.GOV/EBC/EFS_HELP.HTML

APPLICANT HEREBY REQUESTS PARTICIPATION IN THE PCT-PPH PROGRAM AND PETITIONS TO MAKE THE ABOVE-IDENTIFIED APPLICATION SPECIAL UNDER THE PCT-PPH PROGRAM.

The above-identified application is (1) a national stage entry of the corresponding PCT application, or (2) a national stage entry of another PCT application which claims priority to the corresponding PCT application, or (3) a national application that claims domestic/ foreign priority to the corresponding PCT application, or (4) a national application which forms the basis for the priority claim in the corresponding PCT application, or (5) a continuing application of a U.S. application that satisfies one of (1) to (4) above, or (6) a U.S. application that claims domestic benefit to a U.S. provisional application which forms the basis for the priority claim in the corresponding PCT application.

The corresponding PCT application number(s) is/are: PCT/JP2009/006826

The international date of the corresponding PCT application(s) is/are: December 13, 2009

I. List of Required Documents:

a. **A copy of the latest international work product (WO/ISA, WO/IPEA, or IPER) in the above-identified corresponding PCT application(s)**

☑ Is attached.

☐ Is not attached because the document is already in the U.S. application.

b. **A copy of all claims which were indicated as having novelty, inventive step and industrial applicability in the above-identified corresponding PCT application(s).**

☐ Is attached.

☑ Is not attached because the document is already in the U.S. application.

c. **English translations of the documents in a. and b. above are attached (if the documents are not in the English language). A statement that the English translation is accurate is attached for the document in b. above.**

This collection of information is required by 35 U.S.C. 119, 37 CFR 1.55, and 37 CFR 1.102(d). The information is required to obtain or retain a benefit by the public, which is to file (and by the USPTO to process) an application. Confidentiality is governed by 35 U.S.C. 122 and 37 CFR 1.11 and 1.14. This collection is estimated to take 2 hours to complete, including gathering, preparing, and submitting the completed application form to the USPTO. Time will vary depending upon the individual case. Any comments on the amount of time you require to complete this form and/or suggestions for reducing this burden should be sent to the Chief Information Officer, U.S. Patent and Trademark Office, U.S. Department of Commerce, P.O. Box 1450, Alexandria, VA 22313-1450. DO NOT SEND FEES OR COMPLETED FORMS TO THIS ADDRESS.

Approved for use through 01/31/2012. OMB 0651-0058
U.S.Patent and Trademark Office; U.S. DEPARTMENT OF COMMERCE

Under the Paperwork Reduction Act of 1995, no persons are required to respond to a collection of information unless it displays a valid OMB control number.

REQUEST FOR PARTICIPATION IN THE PCT-PPH PILOT PROGRAM BETWEEN THE JPO AND THE USPTO

(continued)

Application No.:	13/145,745
First Named Inventor:	Takayuki Sugiro

d. **(1) An information disclosure statement listing the documents cited in the international work products (ISR, WO/ISA, WO/IPEA, IPER) of the corresponding PCT application.**

☐ Is attached

☑ Has already been filed in the above-identified U.S. application on July 21, 2011

(2) Copies of all documents (except) for U.S. patents or U.S. patent application publications)

☐ Are attached.

☑ Have already been filed in the above-identified U.S. application on July 21, 2011

II. Claims Correspondence Table:

Claims in US Application	Patentable Claims in the corresponding PCT Application	Explanation regarding the correspondence
1	1	US App claim 1 is a translation of corresponding Japanese case claim 1.
2	2	US App claim 2 is a translation of corresponding Japanese case claim 2.
3		US App claim 3 is a translation of corresponding Japanese case claim 3*.
4	4	US App claim 4 is a translation of corresponding Japanese case claim 4**.
5	5	US App claim 5 is a translation of corresponding Japanese case claim 5**.
6	6	US App claim 6 is a translation of corresponding Japanese case claim 6.
		* Claim 3 depends from claim 2.
		** Multiple dependency removed in US claims 4-5 by preliminary amendment.

III. All the claims in the US application sufficiently correspond to the patentable claims in the corresponding PCT application.

Signature		Date	August 31, 2011
Name (Print/Typed)	C. Bruce Hamburg	Registration Number	22,389

DECLARATION

I, Iori Joko, residing at 133 Seaman Ave. #1A, New York, NY, USA, do hereby declare under Section 1001 of Title 18 of the United States Code that I am conversant with the English and Japanese languages and am a competent translator thereof, and that to the best of my knowledge and belief the attached is a true and correct English translation of "PCT Opinions by International Searching Authority" originally written in Japanese, omitting textual items that are unmarked by checkmarks.

On this day of Aug 29, 2011

Iori Joko

F-10626

PCT/JP2009/006826
Patent Cooperation Treaty

Issued by Japan Patent Office (International Searching Authority)

Agent: Makoto Yamamoto Address: Best Tsunashima 504 1-9-13 Tsunashima-nishi, Kohoku-ku, Yokohama-shi, Kanagawa 223-0053 JAPAN	PCT Opinions by International Searching Authority (Law Enforcement Regulations Article 40-2) (PCT Rule 43, 2.1)
	Sent on (day. month. year) 09.03.2010
Document code of applicant or agent: P080097WO	For future action, see 2 below

International filing number: PCT/JP2009/006826	International filing date: (day. month. year) 13.12.2009	Priority date (day. month. year) 27.01.2009

International patent classification (IPC) Int. Cl. A63F13/10(2006.01)i, A63A13/00(2006)i

Applicant (name)
Sega Corporation

1. This opinion contains the following items:
   - Box I: Basis of the opinion
   - Box V: Opinions regarding novelty, inventive step or industrial applicability prescribed in PCT Rule 43, 2.1(a)(i), and document and explanations for supporting such opinions
   - Box VIII: Opinions regarding the international application

2. Future action
If any international preliminary examination is requested, this opinion will be considered to be the initial written opinion of the International Preliminary Examining Authority except when the applicant selects an Authority other than this one to be the International Preliminary Examining Authority and the selected International Preliminary Examining Authority has notified the International Bureau according to Rule 66.1 (b) that written opinions of this International Searching Authority will not be so considered.

If this written opinion is, as described above, considered to be a written opinion of the International Preliminary Examining Authority, the applicant may submit to the International Preliminary Examining Authority a written reply, together with amendments where appropriate, before the expiration of 3 months from the date of mailing of Form PCT/ISA/220 or before the expiration of 22 months from the priority date, whichever expires later.

For further options, see Form PCT/ISA/220.

3. For further details, see notes to Form PCT/ISA/220.

Date on which the written opinion was prepared:
24.02.2010

Name and address Japan Patent Office (ISA/JP) 3-4-3 Kasumigaseki, Chiyoda-ku, Tokyo 200-8915		2B	4096
	Patent Office Examiner (authorized staff) Kenji Usada Phone: 03-3581-1101 Ex. 3237		

Opinions of International Searching Authority	International Filing No. PCT/JP2009/006826
Box I: Basis of the opinions	
1. With regard to the language, this opinion has been established on the basis of: The international application in the language in which it was filed	

Opinions of International Searching Authority	International Filing No. PCT/JP2009/006826

Box V: Opinions regarding novelty, inventive step or industrial applicability prescribed in PCT Rule 43, 2.1(a)(i), and document and explanations for supporting such opinions

1. Opinions

Novelty (N):	claims 1-6
Inventive step (IS):	claims 1-6
Industrial applicability (IA):	claims 1-6

2. Documents and explanations

Document 1: JP 2005-304 A (Konami Entertainment Japan Co. Ltd.), January 06, 2005, abstract, paragraphs 0052-0053 & US 2004/0254004 A1

Document 2: JP 2008-161601 A (Sega Corporation), July 17, 2008, claims 1 and 5

Document 3: JP 2007-54171 A (Nintendo Co., Ltd.), March 08, 2007, paragraphs 0037-0038 & US 2007/0060234 A1

Document 4: JP 2006-75299 A (Capcom Co., Ltd), March 23, 2006, abstract

Document 5: JP 2003-62343 A (Konnami Corporation), March 04, 2003, paragraph 0140

Document 6: JP 2000-37558 A (Sega Enterprises Co., Ltd.), February 08, 2000, paragraph 0020

Regarding the invention relating to claims 1-6

The invention relating to claims 1-6 is not disclosed in any of the documents cited in the International Search Report, and would not be obvious to a person skilled in the art. More specifically, none of the above documents discloses the following feature of the invention relating to claims 1-6: "means for setting said damage as a temporary damage or an actual damage; means for recording a temporary damage amount according to said temporary damage in the memory when said player character receives said temporary damage; means for updating said temporary damage amount recorded in said memory to an amount that is decreased by a prescribed amount over time after said player character has received said temporary damage; and means for calculating a damage amount when said player character receives an actual damage while said temporary damage amount is recorded in said memory, whereby the damage amount is a total of actual damage amount according to said actual damage and said temporary damage amount in said memory, and reducing the life force parameter of said player character according to said damage amount." With such a feature, the current invention demonstrates the advantageous effect of "allowing setting of an actual damage that reduces the life force parameter and a temporary damage that can be restored, thereby diversifying game development."

Opinions of International Searching Authority	International Filing No. PCT/JP2009/006826

Box VIII: Opinions on the international application

Opinion regarding clarity of claims and specification, or sufficiency of basis in the specification for the claims.

Claim 3 states: "when the cumulative sum of said points has reached a prescribed amount, said player character is set to a state where said damages are all set as temporary damage regardless of said attack capability parameter." However, even in consideration of the specification etc. regarding the above, no specific description can be found other than some abstract description in paragraph 0012. Therefore, the correspondence between the two is unclear, and the description in claim 3 cannot be said to allow a person skilled in the art to clearly understand the matter.

特許協力条約

発信人　日本国特許庁（国際調査機関）

代理人
山本鋭
様

あて名
〒223-0053
日本国神奈川県横浜市港北区綱島西１丁目９－１３
ベスト綱島５０４号

ＰＣＴ
国際調査機関の見解書
（法施行規則第40条の2）
〔ＰＣＴ規則43の2.1〕

発送日 （日.月.年）	０９．０３．２０１０
出願人又は代理人 の書類記号　P080097WO	今後の手続きについては、下記２を参照すること。

国際出願番号	国際出願日	優先日
ＰＣＴ／ＪＰ２００９／００６８２６	（日.月.年）　１３．１２．２００９	（日.月.年）　２７．０１．２００９

国際特許分類（ＩＰＣ）Int.Cl. A63F13/10(2006.01)i, A63F13/00(2006.01)i

出願人（氏名又は名称）
株式会社セガ

１．この見解書は次の内容を含む。
- ☑ 第Ⅰ欄　見解の基礎
- ☐ 第Ⅱ欄　優先権
- ☐ 第Ⅲ欄　新規性、進歩性又は産業上の利用可能性についての見解の不作成
- ☐ 第Ⅳ欄　発明の単一性の欠如
- ☑ 第Ⅴ欄　ＰＣＴ規則43の2.1(a)(i)に規定する新規性、進歩性又は産業上の利用可能性についての見解、それを裏付けるための文献及び説明
- ☐ 第Ⅵ欄　ある種の引用文献
- ☐ 第Ⅶ欄　国際出願の不備
- ☑ 第Ⅷ欄　国際出願に対する意見

２．今後の手続き
国際予備審査の請求がされた場合は、出願人がこの国際調査機関とは異なる国際予備審査機関を選択し、かつ、その国際予備審査機関がＰＣＴ規則66.1の2(b)の規定に基づいて国際調査機関の見解書を国際予備審査機関の見解書とみなさない旨を国際事務局に通知していた場合を除いて、この見解書は国際予備審査機関の最初の見解書とみなされる。

この見解書が上記のように国際予備審査機関の見解書とみなされる場合、様式ＰＣＴ／ＩＳＡ／２２０を送付した日から３月又は優先日から２２月のうちいずれか遅く満了する期限が経過するまでに、出願人は国際予備審査機関に、適当な場合は補正書とともに、答弁書を提出することができる。

さらなる選択肢は、様式ＰＣＴ／ＩＳＡ／２２０を参照すること。

３．さらなる詳細は、様式ＰＣＴ／ＩＳＡ／２２０の備考を参照すること。

見解書を作成した日
２４．０２．２０１０

名称及びあて先 日本国特許庁（ＩＳＡ／ＪＰ） 郵便番号１００－８９１５ 東京都千代田区霞が関三丁目４番３号	特許庁審査官（権限のある職員） 宇佐田　健二 電話番号　０３－３５８１－１１０１　内線　３２３７	２Ｂ	４０９６

様式ＰＣＴ／ＩＳＡ／２３７（表紙）（２００９年７月）

国際調査機関の見解書

国際出願番号　PCT／JP2009／006826

第Ⅰ欄　見解の基礎

1．言語に関し、この見解書は以下のものに基づき作成した。

☑ 出願時の言語による国際出願

☐ 出願時の言語から国際調査のための言語である ＿＿＿＿＿＿ 語に翻訳された、この国際出願の翻訳文（ＰＣＴ規則12.3(a)及び23.1(b)）

2．☐ この見解書は、ＰＣＴ規則 91 の規定により国際調査機関が認めた又は国際調査機関に通知された明らかな誤りの訂正を考慮して作成した（ＰＣＴ規則 43 の 2.1(b)）。

3．この国際出願で開示されたヌクレオチド又はアミノ酸配列に関して、提出された以下の配列表に基づき見解書を作成した。

a．提出手段　☐ 紙形式

☐ 電子形式

b．提出時期　☐ 出願時の国際出願に含まれていたもの

☐ この国際出願と共に電子形式により提出されたもの

☐ 出願後に、調査のために、この国際調査機関に提出されたもの

4．☐ さらに、複数の版の配列表又は配列表の写しを提出した場合、出願後に提出した配列の写し若しくは追加して提出した配列の写しが、出願時に提出した配列と同一である旨又は出願時の開示を超える事項を含まない旨の陳述書の提出があった。

5．補足意見：

国際調査機関の見解書

国際出願番号 PCT／JP2009／006826

第V欄 新規性、進歩性又は産業上の利用可能性についてのPCT規則43の2.1(a)(i)に定める見解、それを裏付ける文献及び説明

1. 見解

新規性（N）	請求項	1－6	有
	請求項		無
進歩性（IS）	請求項	1－6	有
	請求項		無
産業上の利用可能性（IA）	請求項	1－6	有
	請求項		無

2. 文献及び説明

文献1：JP 2005-304 A（株式会社コナミコンピュータエンタテインメントジャパン）２００５．０１．０６，要約，段落００５２－００５３ & US 2004/0254004 A1

文献2：JP 2008-161601 A（株式会社セガ）２００８．０７．１７，請求項1，5

文献3：JP 2007-54171 A（任天堂株式会社）２００７．０３．０８，段落００３７－００３８ & US 2007/0060234 A1

文献4：JP 2006-75299 A（株式会社カプコン）２００６．０３．２３，要約

文献5：JP 2003-62343 A（コナミ株式会社）２００３．０３．０４，段落０１４０

文献6：JP 2000-37558 A（株式会社セガ・エンタープライゼス）２０００．０２．０８，段落００２０

請求項１－６に係る発明について

請求項１－６に係る発明は、国際調査報告に引用されたいずれの文献にも記載されておらず、当業者にとって自明なものでもない。即ち、請求項１－６に係る発明における、「前記ダメージを仮ダメージあるいは実ダメージに設定する手段と、前記プレーヤキャラクタが前記仮ダメージを受けたときに、該仮ダメージに基づく仮ダメージ量をメモリに記憶する手段と、前記プレーヤキャラクタが前記仮ダメージを受けた後、前記メモリに記憶されている前記仮ダメージ量を、時間の経過に従って所定量減少したものに更新する手段と、前記メモリに前記仮ダメージ量が記憶されている際に、前記プレーヤキャラクタが実ダメージを受けたときに、該実ダメージに基づく実ダメージ量と、前記メモリ内の前記仮ダメージ量とを合計したダメージ量を算出し、該ダメージ量に基づいて前記プレーヤキャラクタの生命力パラメータを減少させる手段」については、上記いずれの文献にも記載されておらず、これにより「生命力パラメータを減少させる実ダメージと、回復可能な仮ダメージが設定でき、ゲーム展開を多様化し得る」という有利な効果を発揮する。

第Ⅷ欄　国際出願に対する意見

請求の範囲、明細書及び図面の明瞭性又は請求の範囲の明細書による十分な裏付についての意見を次に示す。

請求項３には、「前記ポイントの累積が所定量に達したときに、前記プレーヤキャラクタの状態を、前記攻撃力パラメータに関わらず前記ダメージを全て仮ダメージに設定される状態とする」と記載されているが、上記について明細書等を参酌しても、段落００１２に形式的な記載はあるものの、具体的な記載は見当たらないため、両者の対応関係が不明瞭であり、当業者に明確に理解できるように記載されているとはいえない。

UNITED STATES PATENT AND TRADEMARK OFFICE

UNITED STATES DEPARTMENT OF COMMERCE
United States Patent and Trademark Office
Address: COMMISSIONER FOR PATENTS
P.O. Box 1450
Alexandria, Virginia 22313-1450
www.uspto.gov

APPLICATION NO.	FILING DATE	FIRST NAMED INVENTOR	ATTORNEY DOCKET NO.	CONFIRMATION NO.
13/145,745	07/21/2011	Takayuki Suguro	F10626	7637

28107 7590 10/02/2011
JORDAN AND HAMBURG LLP
122 EAST 42ND STREET
SUITE 4000
NEW YORK, NY 10168

EXAMINER

ART UNIT	PAPER NUMBER
3714	

MAIL DATE	DELIVERY MODE
10/02/2011	PAPER

Please find below and/or attached an Office communication concerning this application or proceeding.

The time period for reply, if any, is set in the attached communication.

UNITED STATES PATENT AND TRADEMARK OFFICE

Commissioner for Patents
United States Patent and Trademark Office
P.O. Box 1450
Alexandria, VA 22313-1450
www.uspto.gov

JORDAN AND HAMBURG LLP
122 EAST 42ND STREET
SUITE 4000
NEW YORK NY 10168

In re Application of: SUGURO, TAKAYUKI Serial No.: 13/145,745 Filed: July 21, 2011 Attorney Docket No. : F10626 Title: GAME CONTROL PROGRAM AND GAME DEVICE	: DECISION ON A REQUEST TO : PARTICIPATE IN PATENT : PCT/PROSECUTION HIGHWAY : PROGRAM AND PETITION : TO MAKE SPECIAL UNDER : CFR 1.102(a) :

This is a decision on the request to participate in the Patent Prosecution Highway (PPH) program and the petition under 37 CFR 1.102(a), filed August 31, 2011 to make the above-identified application special.

The request and petition are **granted**.

A grantable request to participate in the PPH pilot program and petition to make special require:

(1) The U.S. application must validly claim priority under 35 U.S.C. 119(a) to one or more applications filed in the JPO;
(2) Applicant must submit a copy of the allowable/patentable claim(s) from the JPO application(s);
(3) All the claims in the U.S. application must sufficiently correspond or be amended to sufficiently correspond to the allowable/patentable claim(s) in the JPO application(s);
(4) Examination of the U.S. application has not begun;
(5) Applicant must submit a copy of all the office actions from each of the JPO application(s) containing the allowable/patentable claim(s) along with an English translation thereof and a statement that the English translation is accurate; and
(6) Applicant must submit an IDS listing the documents cited by the JPO examiner in the JPO office action along with copies of documents except U.S. patents or U.S. patent application publications.

In light of the petition being properly submitted, the request to participate in the PPH program and the petition comply with the above requirements. Accordingly, the above-identified application has been accorded "special" status.

This application is undergoing pre-examination processing. Upon competition, the application will be forwarded to an examiner for docketing. The applicant is encouraged to cite and submit all relevant prior art references, if any, to facilitate examination in this application.

Response must be filed via EFS-Web. Telephone inquiries concerning this decision should be directed to Henry C. Yuen, at 571-272-4856.

Petition is **granted**.

/Henry C. Yuen/

Henry C. Yuen
Special Programs Examiner
Technology Center 3700
Tel: 571-272-4856

PTO/SB/20PCT-KR (06-10)
Approved for use through 01/31/2012. OMB 0651-0058
U.S. Patent and Trademark Office; U. S. DEPARTMENT OF COMMERCE
Under the Paperwork Reduction Act of 1995, no persons are required to respond to a collection of information unless it displays a valid OMB control number.

REQUEST FOR PARTICIPATION IN THE PATENT COOPERATION TREATY - PATENT PROSECUTION HIGHWAY (PCT-PPH) PILOT PROGRAM BETWEEN THE KOREAN INTELLECTUAL PROPERTY OFFICE (KIPO) AND THE USPTO

Application No:	13/145,785	Filing date:	JULY 21, 2011
First Named Inventor:	BLAKE EDWARD DICKINSON		
Title of the Invention:	Electric Vehicle Simulator and Analyzer (EVSA) for Electric Vehicle Supply Equipment		

THIS REQUEST FOR PARTICIPATION IN THE PCT-PPH PILOT PROGRAM ALONG WITH THE REQUIRED DOCUMENTS MUST BE SUBMITTED VIA EFS-WEB. INFORMATION REGARDING EFS-WEB IS AVAILABLE AT HTTP://WWW.USPTO.GOV/EBC/EFS_HELP.HTML

APPLICANT HEREBY REQUESTS PARTICIPATION IN THE PCT-PPH PROGRAM AND PETITIONS TO MAKE THE ABOVE-IDENTIFIED APPLICATION SPECIAL UNDER THE PCT-PPH PROGRAM.

The above-identified application is (1) a national stage entry of the corresponding PCT application, or (2) a national stage entry of another PCT application which claims priority to the corresponding PCT application, or (3) a national application that claims domestic/ foreign priority to the corresponding PCT application, or (4) a national application which forms the basis for the priority claim in the corresponding PCT application, or (5) a continuing application of a U.S. application that satisfies one of (1) to (4) above, or (6) a U.S. application that claims domestic benefit to a U.S. provisional application which forms the basis for the priority claim in the corresponding PCT application.

The corresponding PCT application number(s) is/are: PCT/US10/48179

The international filing date of the corresponding PCT application(s) is/are: SEPTEMBER 8, 2010

I. List of Required Documents:

a. **A copy of the latest international work product (WO/ISA, WO/IPEA, or IPER) in the above–identified corresponding PCT application(s)**

☐ Is attached.

☑ Is not attached because the document is already in the U.S. application.

b. **A copy of all claims which were indicated as having novelty, inventive step and industrial applicability in the above-identified corresponding PCT application(s).**

☑ Is attached.

☐ Is not attached because the document is already in the U.S. application.

c. **English translations of the documents in a. and b. above are attached (if the documents are not in the English language). A statement that the English translation is accurate is attached for the document in b. above.**

This collection of information is required by 35 U.S.C. 119, 37 CFR 1.55, and 37 CFR 1.102(d). The information is required to obtain or retain a benefit by the public, which is to file (and by the USPTO to process) an application. Confidentiality is governed by 35 U.S.C. 122 and 37 CFR 1.11 and 1.14. This collection is estimated to take 2 hours to complete, including gathering, preparing, and submitting the completed application form to the USPTO. Time will vary depending upon the individual case. Any comments on the amount of time you require to complete this form and/or suggestions for reducing this burden should be sent to the Chief Information Officer, U.S. Patent and Trademark Office, U.S. Department of Commerce, P.O. Box 1450, Alexandria, VA 22313-1450. DO NOT SEND FEES OR COMPLETED FORMS TO THIS ADDRESS.

Approved for use through 01/31/2012. OMB 0651-0058
U.S.Patent and Trademark Office; U.S. DEPARTMENT OF COMMERCE

Under the Paperwork Reduction Act of 1995, no persons are required to respond to a collection of information unless it displays a valid OMB control number.

REQUEST FOR PARTICIPATION IN THE PCT-PPH PILOT PROGRAM BETWEEN THE KIPO AND THE USPTO

(continued)

Application No.:	13/145,785
First Named Inventor:	BLAKE EDWARD DICKINSON

d. **(1) An information disclosure statement listing the documents cited in the international work products (ISR, WO/ISA, WO/IPEA, IPER) of the corresponding PCT application.**

☐ Is attached

☑ Has already been filed in the above-identified U.S. application on JULY 21, 2011

(2) Copies of all documents (except) for U.S. patents or U.S. patent application publications)

☐ Are attached.

☑ Have already been filed in the above-identified U.S. application on JULY 22, 2011

II. Claims Correspondence Table:

Claims in US Application	Patentable Claims in the corresponding PCT Application	Explanation regarding the correspondence
1-14	1-14	IDENTICAL

III. All the claims in the US application sufficiently correspond to the patentable claims in the corresponding PCT application.

Signature Michael B. Brooks	Date JULY 25, 2011
Name (Print/Typed) MICHAEL B. BROOKS	Registration Number 39,921

IN THE UNITED STATES PATENT AND TRADEMARK OFFICE

Application no.	:	13/145,785	Confirmation No. 8088
Applicant	:	Blake Edward Dickinson	
Filed	:	July 21, 2011	
Title	:	Electric Vehicle Simulator and Analyzer (EVSA) for Electric Vehicle Supply Equipment	
Art Unit	:	TBD	
Examiner	:	TBD	
Docket no.	:	AEROVI1116	
Customer no.	:	68236	

Date: July 25, 2011

Mail Stop AMENDMENT
Commissioner for Patents
P.O. Box 1450
Alexandria, VA 22313-1450

SUPPLEMENTAL SUBMISSION OF PCT CLAIMS SUPPORTING A REQUEST FOR THE PATENT PROSECUTION HIGHWAY

Dear Sir:

A REQUEST FOR PARTICIPATION IN THE PATENT PROSECUTION HIGHWAY (PPH) PROGRAM BETWEEN THE KOREAN INTELLECTUAL PROPERTY OFFICE (KIPO) AND THE USPTO was filed on July 22, 2011.

Please include with the Request of July 22, 2011, the following copy of the PCT claims from the corresponding international application PCT/US10/48179.

Respectfully submitted,
MICHAEL BLAINE BROOKS, P.C.

/michael blaine brooks/

Dr. Michael B. Brooks, Esq.
Registration Number 39,921

Telephone No. (805) 579-2500; FAX (805) 584-6427
Michael Blaine Brooks, P.C.
P.O. Box 1630
Simi Valley, CA 93062-1630

Customer No. 68236

UNITED STATES PATENT AND TRADEMARK OFFICE

Commissioner for Patents
United States Patent and Trademark Office
P.O. Box 1450
Alexandria, VA 22313-1450
www.uspto.gov

MICHAEL BLAINE BROOKS, P.C.
P.O. BOX 1630
SIMI VALLEY, CA 93062-1630

MAILED

JAN 30 2012

OFFICE OF PETITIONS

In re Application of
Blake Edward Dickinson, et. al.
Application No.: 13/145,785
Filed: September 23, 2011
Attorney Docket No.: AEROVI1116
For: ELECTRIC VEHICLE SIMULATOR AND ANALYZER (EVSA) FOR ELECTRIC VEHICLE SUPPLY EQUIPMENT

: DECISION ON REQUEST TO
: PARTICIPATE IN THE PATENT
: PROSECUTION HIGHWAY
: PROGRAM AND PETITION
: TO MAKE SPECIAL UNDER
: 37 CFR 1.102(a)

This is a decision on the request to participate in the Patent Prosecution Highway (PPH) program and the petition under 37 CFR 1.102(a), filed on July 25, 2011, to make the above-identified application special.

The request and petition are **GRANTED**.

Discussion

A grantable request to participate in the PCT-PPH pilot program and petition to make special require:

(1) The U.S. application must have an eligible relationship to one or more PCT applications where the ISA or IPEA are the Australia, Austria, EPO, Finland, JPO, KIPO, NPI, NBPR, Spain, Sweden, USPTO, or CHINA;

(2) At least one claim in the PCT application has novelty, inventive step, and industrial applicability and must be free of any observations in Box VIII in the latest work product in the international stage or applicant must identify and explain why the claim(s) is/are not subject to the observation in Box VIII;

(3) Applicant must submit a copy of the claim(s) from the PCT application(s) that have novelty, inventive step, and industrial applicability along with an English translation thereof and a statement that the English translation is accurate, if the claims are not in the English language;

(4) All the claims in the U.S. application must sufficiently correspond or be amended to sufficiently correspond to the claim(s) that have novelty, inventive step, and industrial applicability in the PCT application(s);

(5) Examination of the U.S. application has not begun;

(6) Applicant must submit a copy of the latest international work product from the PCT application indicating that the claim(s) have novelty, inventive step, and industrial applicability along with an English translation thereof and a statement that the English translation is accurate if the latest international work product is not in the English language;

(7) Applicant must submit an IDS listing the documents cited by the PCT examiner in the international work product along with copies of documents except U.S. patents or U.S. patent application publications.

The request to participate in the PCT-PPH pilot program and petition comply with the above requirements. Accordingly, the above-identified application has been accorded "special" status.

Telephone inquiries concerning this decision should be directed to the undersigned at (571) 272-3226. All other inquiries concerning the examination or status of the application is accessible in the PAIR system at http://www.uspto.gov/ebc.index.html.

This application will be forwarded to the examiner for action on the merits commensurate with this decision.

/Andrea Smith/
Andrea Smith
Petitions Examiner
Office of Petitions

UNITED STATES PATENT AND TRADEMARK OFFICE

Commissioner for Patents
United States Patent and Trademark Office
P.O. Box 1450
Alexandria, VA 22313-1450
www.uspto.gov

DUANE MORRIS LLP, IP DEPARTMENT (BOCA RATON)
SUITE 300
2700 NORTH MILITARY TRAIL
BOCA RATON FL 33431-1808

MAILED
AUG 24 2011
OFFICE OF PETITIONS

In re Application of	:	
Gleim et al.	:	
Application No. 13/145,963	:	ON PETITION
Date Deposited: July 22, 2011		
Attorney Docket No. F6200-00301	:	
	:	

This is a decision on the petition under 37 CFR 1.102(c)(1), filed July 22, 2011, to make the above-identified application special based on applicant's age as set forth in M.P.E.P. § 708.02, Section IV.

The petition is **GRANTED**.

A grantable petition to make an application special under 37 CFR 1.102(c)(1) and MPEP § 708.02, Section IV: Applicant's Age must be accompanied by evidence showing that at least one of the applicants is 65 years of age, or more, such as a birth certificate or a statement by applicant. No fee is required

The instant petition includes a statement (PTO/SB/130 form) by the applicant's attorney that applicant is 65 years of age. Accordingly, the above-identified application has been accorded "special" status.

Telephone inquiries concerning this decision should be directed to the undersigned at 571-272-7751. All other inquiries concerning either the examination or status of the application should be directed to the Technology Center.

The application is being referred to the Office of Patent Application Processing for further processing in accordance with this decision on petition.

/Joan Olszewski/
Joan Olszewski
Petitions Examiner
Office of Petitions

UNITED STATES PATENT AND TRADEMARK OFFICE

Commissioner for Patents
United States Patent and Trademark Office
P.O. Box 1450
Alexandria, VA 22313-1450
www.uspto.gov

Byrne Poh LLP
11 Broadway, Ste 814
New York NY 10004

MAILED
AUG 01 2011
PCT LEGAL ADMINISTRATION

In re Application of
CABRERA CARRILLO, et al
Application No.: 13/146,079
PCT No.: PCT/ES09/000601
Int. Filing Date: 29 December 2009
Priority Date: 31 December 2008
ATTY Docket No.: 1615140.135-US1
For: AUTOMOBILE BRAKING SYSTEM WITH GRIP PREDICTION AND CONTINUOUS CONTROL OF BRAKING PRESSURE

DECISION ON PETITION
UNDER 37 CFR 1.137(b)

This decision is in response to applicant's PETITION FOR REVIVAL OF AN INTERNATIONAL APPLICATION FOR PATENT DESIGNATING THE U.S. ABANDONED UNINTENTIONALLY UNDER 37 CFR 1.137(b) in application serial number 13/146,079. The petition was filed in the United States Patent and Trademark Office (USPTO) on 25 July 2011.

BACKGROUND

On 29 December 2009, applicant filed international application, PCT/ES09/000601, claiming priority to a Spanish Application dated of 31 December 2008.

The thirty-month period for paying the basic national fee in the United States expired on 30 June 2011. This application became abandoned with respect to the United States at midnight on 30 June 2011 for failure to pay the required basic national fee and providing the documents as required by 35 U.S.C. 371 (c).

On 25 July 2011, applicant submitted national stage papers with the United States Designated/Elected Office (DO/EO/US) along with the required basic national filing fee, petition fee, and petition under 37 CFR 1.137(b).

DISCUSSION

A grantable petition to revive an abandoned application under 37 CFR 1.137(b) must be accompanied by:

(1) The required reply, unless previously filed;

(2) The petition fee as set forth in 37 CFR 1.17(m);

(3) A statement that the entire delay in filing the required reply from the due date for the reply until the filing of a grantable petition pursuant to 37 CFR 1.137(b) was unintentional. The Director may require additional information where there is a question whether the delay was unintentional; and,

(4) Any terminal disclaimer (and fee as set forth in 37 CFR 1.20(d) required pursuant to 37 CFR 1.137(d).

Regarding item (1), applicant has provided the required reply.

Regarding item (2), applicant has paid the $810 petition fee.

Regarding item (3), the applicant has provided the required statement.

Regarding item (4), because the international application was filed after 8 June 1995, no terminal disclaimer is required.

Accordingly, the petition is deemed to satisfy the requirements under 37 CFR 1.137(b).

CONCLUSION

The petition under 37 CFR 1.137(b) is **GRANTED.**

The application is being returned to the United States Designated/Elected Office (DO/EO/US) for continued processing, including mailing of a Notification of Missing Requirements (Form PCT/DO/EO/905) indicating that an oath or declaration in compliance with 37 C.F.R. 1.497 must be filed.

Gwendolyn Blackwell
PCT Legal Detailee
Office of PCT Legal Administration
Tel: (571) 272-6094

Boris Milef
PCT Legal Examiner
Office of PCT Legal Administration

UNITED STATES PATENT AND TRADEMARK OFFICE

Commissioner for Patents
United States Patent and Trademark Office
P.O. Box 1450
Alexandria, VA 22313-1450
www.uspto.gov

SIM & MCBURNEY
330 UNIVERSITY AVENUE
6TH FLOOR
TORONTO ON M5G 1R7 CA CANADA

MAILED
SEP 27 2011
PCT LEGAL ADMINISTRATION

In re Application of :
SEGALL et al. :
Application No.: 13/146,082 :
PCT No.: PCT/CA2010/000109 :
Int. Filing Date: 25 January 2010 :
Priority Date: 26 January 2009 :
Attorney Docket No.: 7865-574 MIS :
For: PRODUCTION OF SOLUBLE SOY PROTEIN PRODUCT FROM SOY PROTEIN MICELLAR MASS

DECISION ON PETITION
UNDER 37 CFR 1.137(b)

The petition to revive under 37 CFR 1.137(b) filed 08 September 2011 in the above-captioned application is hereby GRANTED as follows:

Applicants' statement that "the entire delay in filing the required reply from the due date for the reply until the filing of a grantable petition under 37 CFR 1.137(b) was unintentional" meets the requirements of 37 CFR 1.137(b)(3).

A review of the application file reveals that applicants have submitted the basic national fee and the requirements of 37 CFR 1.137(b) have been satisfied. Therefore, the request to revive the application abandoned under 35 U.S.C. 371(d) is granted as to the National stage in the United States of America.

This application is being returned to the United States Designated/Elected Office for processing in accordance with this decision

Anthony Smith
Attorney-Advisor
Office of PCT Legal Administration
Telephone: (571) 272-3298
Facsimile: (571) 273-0459

UNITED STATES PATENT AND TRADEMARK OFFICE

Commissioner for Patents
United States Patent and Trademark Office
P.O. Box 1450
Alexandria, VA 22313-1450
www.uspto.gov

MAILED

OCT 14 2011

PCT LEGAL ADMINISTRATION

Cantor Colburn LLP - Carrier
20 Church Street, 22nd Floor
Hartford CT 06103

In re Application of: YU, Lei, et al.
U.S. Application No.: 13/146,094
PCT Application No.: PCT/US2010/024425
International Filing Date: 17 February 2010
Priority Date: 24 February 2009
Attorney's Docket No.: PA-0008101
For: AIR TREATMENT MODULE

DECISION ON PETITION UNDER 37 CFR 1.182

This decision is issued in response to the "Petition Under 37 CFR 1.182 For Review And Processing By The PCT Legal Office" filed on 29 September 2011. Applicants have paid the required petition fee.

BACKGROUND

On 20 September 2011, this Office mailed a communication indicating that a petition under 37 CFR 1.182 was required to clarify the record as to the correct international application number for the present national stage application. The notification indicated that the original application submission on 25 July 2011 referenced two different international applications, specifically, PCT/US2010/023196 and PCT/US2010/024425.

On 29 September 2011, applicants filed the petition under 37 CFR 1.182 considered herein.

DISCUSSION

The petition filed on 29 September 2011 confirms that the correct international application number for the present national stage application is PCT/US2010/024425 and that the reference to incorrect application number PCT/US2010/023196 in the Form PTO-1390 filed on 25 July 2011 was the result of an inadvertent error. The petition notes that the correct international application number was present in the initial application materials filed on 25 July 2011 (e.g., in the ADS). In addition, the petition was accompanied by the required petition fee.

Applicants' 29 September 2011 submission satisfies the requirements for a grantable petition under 37 CFR 1.182 to correct the inconsistency in the international application numbers referenced in applicants' 25 July 2011 filing. Accordingly, the application materials filed on 25 July 2011 will be treated as directed to international application PCT/US2010/024425. Such materials, including payment of the U.S. basic national fee, were filed prior to the expiration of

thirty months from the priority date of PCT/US2010/024425, thereby avoiding abandonment of the international application with respect to the United States.

CONCLUSION

The petition under 37 CFR 1.182 is **GRANTED**.

The present application will be treated as the U.S. national stage under 35 U.S.C. 371 of PCT/US2010/024425.

The application is being referred to the National Stage Processing Branch of the Office of PCT Operations for further processing in accordance with this decision.

/RichardMRoss/

Richard M. Ross
Attorney Advisor
Office of PCT Legal Administration
Telephone: (571) 272-3296

UNITED STATES PATENT AND TRADEMARK OFFICE

Commissioner for Patents
United States Patent and Trademark Office
P.O. Box 1450
Alexandria, VA 22313-1450
www.uspto.gov

HOWARD M COHN
PATENT ATTORNEY LLC
30195 CHAGRIN BLVD, #300
CLEVELAND, OH 44124

MAILED
OCT 13 2011
PCT LEGAL ADMINISTRATION

In re Application of MYBURGH	:	
U.S. Application No.: 13/146,128	:	
PCT Application No.: PCT/US2010/020434	:	
Int. Filing Date: 08 January 2010	:	DECISION
Priority Date Claimed: 26 January 2009	:	
Attorney Docket No.: HMH-102us	:	
For: POWERED STAPLER AND METHOD OF OPERATING	:	

This is in response to applicant's correspondence filed 25 July 2011, which is being treated as a request for status under 37 CFR 1.42.

BACKGROUND

On 08 January 2010, applicant filed international application PCT/US2010/020434, which claimed priority of an earlier United States application filed 26 January 2009. The thirty-month period for paying the basic national fee in the United States expired on 26 July 2011.

On 25 July 2011, applicant filed national stage papers in the United States Designated/Elected Office (DO/EO/US). The submission was accompanied by, *inter alia*, the basic national fee required by 35 U.S.C. 371(c)(1), an executed declaration, and the instant request for status under 37 CFR 1.42.

DISCUSSION

The declaration indicates that inventor Herman Myburgh is deceased.

37 CFR 1.42 provides, "In case of the death of the inventor, the legal representative (executor, administrator, etc.) of the deceased inventor may make the necessary oath or declaration, and apply for and obtain the patent."

Effective 07 November 2000, 37 CFR 1.497(b)(2) specifies that, where a person making the declaration is the legal representative of a deceased inventor, the declaration shall state the following: (1) the relationship of the person to the inventor, (2) the facts the inventor would have been required to state, upon information and belief, (3) that the person is the legal representative of the deceased inventor, and (4) the citizenship, residence, and mailing address of the legal representative.

The declaration filed is in compliance with 37 CFR 1.42 and 1.497. Applicant is advised that the use of Form PTO/SB02LR (instead of Form PCT/SB02A) in similar situations in the future will reduce the possibility of the legal representative being listed as an inventor in any patent publication.

CONCLUSION

For the reasons above, the request for status under 37 CFR 1.42 is GRANTED.

The application has an International Filing Date under 35 U.S.C. 363 of 08 January 2010, and a date under 35 U.S.C. 371(c)(1), (c)(2), and (c)(4) of 25 July 2011.

This application is being forwarded to the United States Designated/Elected Office (DO/EO/US) for further processing in accordance with this decision.

Bryan Lin

Bryan Lin
PCT Legal Examiner
PCT Legal Office

Telephone: 571-272-3303
Facsimile: 571-273-0459

UNITED STATES PATENT AND TRADEMARK OFFICE

Commissioner for Patents
United States Patent and Trademark Office
P.O. Box 1450
Alexandria, VA 22313-1450
www.uspto.gov

MAILED

AUG 25 2011

PCT LEGAL ADMINISTRATION

BRINKS HOFER GILSON & LIONE
P.O. BOX 10395
CHICAGO IL 60610

In re Application of	:	
YVES	:	DECISION ON PETITION
Application No.: 13/146,307	:	
PCT No.: PCT/JP2008/073702	:	UNDER 37 CFR 1.137(b)
Int. Filing Date: 26 December 2008	:	
Priority Date: None	:	
Atty. Docket No.: 14552-3	:	
For: METHOD AND DEVICE FOR MEASURING TEMPERATURE DURING DEPOSITION OF SEMICONDUCTOR	:	

The petition to revive under 37 CFR 1.137(b) filed 26 July 2011 in the above-captioned application is hereby **GRANTED** as follows:

Applicant's statement that "the entire delay in filing the required reply form the due date for the required reply until the filing of a grantable petition under 37 CFR 1.137(b) was unintentional" and the prompt filing of the petition satisfies the requirement of 37 CFR 1.137(b)(3).

A review of the application file reveals that applicant has provided the proper reply in the form of payment of the full, U.S. Basic National Fee. Therefore, the request to revive the application abandoned under 35 U.S.C. 371(d) is granted as to the National stage in the United States of America.

This application is being returned to the United States Designated/Elected Office (DO/EO/US) for treatment in accordance with this decision.

Derek A. Putonen
Attorney Advisor
Office of PCT Legal Administration
Tel: (571) 272-3294

UNITED STATES PATENT AND TRADEMARK OFFICE

Commissioner for Patents
United States Patent and Trademark Office
P.O. Box 1450
Alexandria, VA 22313-1450
www.uspto.gov

BUCHANAN, INGERSOLL & ROONEY PC
POST OFFICE BOX 1404
ALEXANDRIA VA 22313-1404

MAILED
OCT 28 2011
PCT LEGAL ADMINISTRATION

In re Application of :
LENNARTSSON, Daniel, et al. :
Application No.: 13/146,320 :
PCT No.: PCT/SE2009/000106 :
Int. Filing Date: 24 February 2009 : DECISION
Priority Date: None :
Attorney Docket No.: 1003301-000429 :
For: ARC WELDING METHOD AND :
APPARATUS FOR ARC WELDING :

This decision is in response to applicants' statement under MPEP 1893.01(e), filed in the United State Patent and Trademark Office on 30 August 2011.

BACKGROUND

On 23 August 2011, applicants filed a declaration of the inventors.

On 26 August 2011, the Office mailed Notification of Missing Requirements (Form PCT/DO/EO/905) indicating that the declaration did not comply with 37 CFR 1.497(a)-(b) as there was a discrepancy in the spelling of inventor Johansson's name.

On 30 August 2011, applicants filed a statement under MPEP 1893.01(e).

DISCUSSION

Applicants state the second inventor's name is "Tomas Johansson" as stated in the international application, but that the name in the declaration contained a transliteration error. The correction of the error in the inventor's name is accepted under MPEP 1893.01(e). The declaration complies with 37 CFR 1.497(a)-(b).

CONCLUSION

For the above reasons, applicant's statement under 1893.01(e) is **GRANTED**.

This application is being referred to the National Phase Processing Branch of the Office of Patent Application Processing for further action consistent with this decision.

/Erin P. Thomson/

Erin P. Thomson
Attorney Advisor
PCT Legal Administration

Telephone: 571-272-3292

PTO/SB/20PCT-JP (05-10)
Approved for use through 01/31/2012. OMB 0651-0058
U.S. Patent and Trademark Office; U.S. DEPARTMENT OF COMMERCE

Under the Paperwork Reduction Act of 1995, no persons are required to respond to a collection of information unless it displays a valid OMB control number.

REQUEST FOR PARTICIPATION IN THE PATENT COOPERATION TREATY - PATENT PROSECUTION HIGHWAY (PCT-PPH) PILOT PROGRAM BETWEEN THE JAPAN PATENT OFFICE (JPO) AND THE USPTO

Application No.:	13/146,366	Filing Date:	July 26, 2011
First Named Inventor:	Junji KIMURA et al.		
Attorney Docket No.:	150033		
Title of the Invention:	ANTI-LEISHMANIAL COMPOUND AND ANTI-LEISHMANIAL DRUG		

THIS REQUEST FOR PARTICIPATION IN THE PCT-PPH PILOT PROGRAM ALONG WITH THE REQUIRED DOCUMENTS MUST BE SUBMITTED VIA EFS-WEB. INFORMATION REGARDING EFS-WEB IS AVAILABLE AT HTTP://WWW.USPTO.GOV/EBC/EFS_HELP.HTML.

APPLICANT HEREBY REQUESTS PARTICIPATION IN THE PCT-PPH PROGRAM AND PETITIONS TO MAKE THE ABOVE-IDENTIFIED APPLICATION SPECIAL UNDER THE PCT-PPH PROGRAM.

The above-identified application is (1) a national stage entry of the corresponding PCT application, or (2) a national stage entry of another PCT application which claims priority to the corresponding PCT application, or (3) a national application that claims domestic/ foreign priority to the corresponding PCT application, or (4) a national application which forms the basis for the priority claim in the corresponding PCT application, or (5) a continuing application of a U.S. application that satisfies one of (1) to (4) above, or (6) a U.S. application that claims domestic benefit to a U.S. provisional application which forms the basis for the priority claim in the corresponding PCT application.

The corresponding PCT application number(s) is/are: PCT/JP2011/055292

The international date of the corresponding PCT application(s) is/are: March 8, 2011

I. **List of Required Documents:**

a. **A copy of the latest international work product (WO/ISA, WO/IPEA, or IPER) in the above–identified corresponding PCT application(s)**

☒ Is attached.

☐ Is not attached because the document is already in the U.S. application.

b. **A copy of all claims which were indicated as having novelty, inventive step and industrial applicability in the above-identified corresponding PCT application(s).**

☒ Is attached.

☐ Is not attached because the document is already in the U.S. application.

c. **English translations of the documents in a. and b. above are attached (if the documents are not in the English language). A statement that the English translation is accurate is attached for the document in b. above.**

This collection of information is required by 35 U.S.C. 119, 37 CFR 1.55, and 37 CFR 1.102(d). The information is required to obtain or retain a benefit by the public, which is to file (and by the USPTO to process) an application. Confidentiality is governed by 35 U.S.C. 122 and 37 CFR 1.11 and 1.14. This collection is estimated to take 2 hours to complete, including gathering, preparing, and submitting the completed application form to the USPTO. Time will vary depending upon the individual case. Any comments on the amount of time you require to complete this form and/or suggestions for reducing this burden should be sent to the Chief Information Officer, U.S. Patent and Trademark Office, U.S. Department of Commerce, P.O. Box 1450, Alexandria, VA 22313-1450. DO NOT SEND FEES OR COMPLETED FORMS TO THIS ADDRESS.

Under the Paperwork Reduction Act of 1995, no persons are required to respond to a collection of information unless it displays a valid OMB control number.

REQUEST FOR PARTICIPATION IN THE PCT-PPH PILOT PROGRAM BETWEEN THE JPO AND THE USPTO

(continued)

Application No.:	13/146,366
First Named Inventor:	Junji KIMURA et al.

d. **(1) An information disclosure statement listing the documents cited in the international work products (ISR, WO/ISA, WO/IPEA, IPER) of the corresponding PCT application.**

☒ No references have been cited.

☐ Has already been filed in the above-identified U.S. application on _____

(2) Copies of all documents (except) for U.S. patents or U.S. patent application publications)

☐ Are attached.

☐ Have already been filed in the above-identified U.S. application on _____

II. Claims Correspondence Table:

Claims in US Application	Patentable Claims in the corresponding PCT Application	Explanation regarding the correspondence
1	1	U.S. Claim 1 Sufficiently Corresponds to PCT Claim 1
2	2	U.S. Claim 2 Sufficiently Corresponds to PCT Claim 2

III. All the claims in the US application sufficiently correspond to the patentable claims in the corresponding PCT application.

Signature	Date September 22, 2011
Name (Print/Typed) James A. Oliff	Registration Number 27,075
Name (Print/Typed) Aaron L. Webb	Registration Number 56,930

OLIFF & BERRIDGE, PLC
P.O. Box 320850
Alexandria, Virginia 22320-4850
Telephone: (703) 836-6400

DEPOSIT ACCOUNT USE AUTHORIZATION
Please grant any extension necessary for entry of this filing; Charge any fee due to our Deposit Account No. 15-0461

Privacy Act Statement

The **Privacy Act of 1974 (P.L. 93-579)** requires that you be given certain information in connection with your submission of the attached form related to a patent application or patent. Accordingly, pursuant to the requirements of the Act, please be advised that: (1) the general authority for the collection of this information is 35 U.S.C. 2(b)(2); (2) furnishing of the information solicited is voluntary; and (3) the principal purpose for which the information is used by the U.S. Patent and Trademark Office is to process and/or examine your submission related to a patent application or patent. If you do not furnish the requested information, the U.S. Patent and Trademark Office may not be able to process and/or examine your submission, which may result in termination of proceedings or abandonment of the application or expiration of the patent.

The information provided by you in this form will be subject to the following routine uses:

1. The information on this form will be treated confidentially to the extent allowed under the Freedom of Information Act (5 U.S.C. 552) and the Privacy Act (5 U.S.C 552a). Records from this system of records may be disclosed to the Department of Justice to determine whether disclosure of these records is required by the Freedom of Information Act.
2. A record from this system of records may be disclosed, as a routine use, in the course of presenting evidence to a court, magistrate, or administrative tribunal, including disclosures to opposing counsel in the course of settlement negotiations.
3. A record in this system of records may be disclosed, as a routine use, to a Member of Congress submitting a request involving an individual, to whom the record pertains, when the individual has requested assistance from the Member with respect to the subject matter of the record.
4. A record in this system of records may be disclosed, as a routine use, to a contractor of the Agency having need for the information in order to perform a contract. Recipients of information shall be required to comply with the requirements of the Privacy Act of 1974, as amended, pursuant to 5 U.S.C. 552a(m).
5. A record related to an International Application filed under the Patent Cooperation Treaty in this system of records may be disclosed, as a routine use, to the International Bureau of the World Intellectual Property Organization, pursuant to the Patent Cooperation Treaty.
6. A record in this system of records may be disclosed, as a routine use, to another federal agency for purposes of National Security review (35 U.S.C. 181) and for review pursuant to the Atomic Energy Act (42 U.S.C. 218(c)).
7. A record from this system of records may be disclosed, as a routine use, to the Administrator, General Services, or his/her designee, during an inspection of records conducted by GSA as part of that agency's responsibility to recommend improvements in records management practices and programs, under authority of 44 U.S.C. 2904 and 2906. Such disclosure shall be made in accordance with the GSA regulations governing inspection of records for this purpose, and any other relevant (*i.e.*, GSA or Commerce) directive. Such disclosure shall not be used to make determinations about individuals.
8. A record from this system of records may be disclosed, as a routine use, to the public after either publication of the application pursuant to 35 U.S.C. 122(b) or issuance of a patent pursuant to 35 U.S.C. 151. Further, a record may be disclosed, subject to the limitations of 37 CFR 1.14, as a routine use, to the public if the record was filed in an application which became abandoned or in which the proceedings were terminated and which application is referenced by either a published application, an application open to public inspection or an issued patent.
9. A record from this system of records may be disclosed, as a routine use, to a Federal, State, or local law enforcement agency, if the USPTO becomes aware of a violation or potential violation of law or regulation.

I. List of Required Documents

A copy of the latest international work products (WO/ISA, WO/IPEA, or IPER) of the corresponding PCT application

- Written Opinion of the International Searching Authority (in Japanese)

特許協力条約

発信人　日本国特許庁（国際調査機関）

代理人
藤本　芳洋
様

あて名
〒107-0062
日本国東京都港区南青山１丁目１４番７号
ヴェルディ乃木坂２階

ＰＣＴ

国際調査報告及び国際調査機関の見解書
又は国際調査報告を作成しない旨の決定
の送付の通知書
（法施行規則第41条）
〔ＰＣＴ規則44.1〕

発送日（日.月.年）	０５．０４．２０１１
出願人又は代理人の書類記号 PCT1102AG	今後の手続きについては、下記１及び４を参照。
国際出願番号 ＰＣＴ／ＪＰ２０１１／０５５２９２	国際出願日（日.月.年） ０８．０３．２０１１
出願人（氏名又は名称） 学校法人青山学院	

１．☑ 国際調査報告及び国際調査機関の見解書が作成されたこと、及びこの送付書とともに送付することを、出願人に通知する。
ＰＣＴ19条の規定に基づく補正書及び説明書の提出
出願人は、国際出願の請求の範囲を補正することができる（ＰＣＴ規則46参照）。
いつ　補正書の提出期間は、通常国際調査報告の送付の日から２月である。
どこへ　直接次の場所へ　The International Bureau of WIPO
34, chemin des Colombettes
1211 Geneva 20, Switzerland
Facsimile No.: +41 22 338 82 70
詳細な手続については、添付用紙の備考を参照すること。

２．☐ 国際調査報告が作成されないこと、及び法第8条第2項（ＰＣＴ17条(2)(a)）の規定による国際調査報告を作成しない旨の決定及び国際調査機関の見解書をこの送付書とともに送付することを、出願人に通知する。

３．☐ 法施行規則第44条（ＰＣＴ規則40.2）に規定する追加手数料の納付に対する異議の申立てに関して、出願人に下記の点を通知する。
☐ 異議の申立てと当該異議についての決定を、その異議の申し立てと当該異議についての決定の両方を指定官庁へ送付することを求める出願人の請求とともに、国際事務局へ送付した。
☐ 当該異議についての決定は、まだ行われていない。決定されしだい出願人に通知する。

４．今後の手続：　出願人は次の点に注意すること。
優先日から１８月経過後、国際出願は国際事務局によりすみやかに国際公開される。出願人が公開の中止又は延期を望むときは、国際出願又は優先権の主張の取下げの通知がＰＣＴ規則90の2.1及び90の2.3にそれぞれ規定されているように、国際公開の事務的な準備が完了する前に国際事務局に到達しなければならない。
出願人は、国際調査機関の見解書に対して、非公式コメントを提出することができる。国際事務局は、国際予備審査報告が作成された場合又は作成される場合を除いて、このコメントをすべての指定官庁に送付する。これらのコメントは公開されるが、優先日から３０月が経過するまでは公開されない。
いくつかの指定官庁については、出願人が国内段階の開始を優先日から３０月まで（官庁によってはさらに遅くまで）延期することを望むときは、優先日から１９月以内に、国際予備審査の請求書が提出されなければならない。そうでなければ、出願人はそれらの指定官庁に対して優先日から２０月以内に、国内段階の開始のための所定の手続を取らなければならない。
その他の指定官庁については、１９月以内に国際予備審査の請求書が提出されない場合にも、３０月の（あるいはさらに遅い）期限が適用される。
様式ＰＣＴ／ＩＢ／３０１の付属書類を参照。個々の指定官庁で適用される期限の詳細については、ＰＣＴ出願人の手引、国内段階を参照。

名称及びあて名 日本国特許庁（ＩＳＡ／ＪＰ） 郵便番号１００－８９１５ 東京都千代田区霞が関三丁目４番３号	権限のある職員 特　許　庁　長　官 電話番号　０３－３５８１－１１０１　内線　３４８３	４Ｖ　９７３４

特許協力条約

発信人　日本国特許庁（国際調査機関）

代理人
藤本　芳洋
様

あて名
〒107-0062
日本国東京都港区南青山１丁目１４番７号
ヴェルディ乃木坂２階

ＰＣＴ
国際調査機関の見解書
（法施行規則第40条の2）
〔ＰＣＴ規則43の2.1〕

発送日 (日.月.年)	０５．０４．２０１１
出願人又は代理人 の書類記号　PCT1102AG	今後の手続きについては、下記２を参照すること。

国際出願番号	国際出願日	優先日
ＰＣＴ／ＪＰ２０１１／０５５２９２	(日.月.年)　０８．０３．２０１１	(日.月.年)　１９．１０．２０１０

国際特許分類（ＩＰＣ）Int.Cl. C07C403/02(2006.01)i, A61K31/202(2006.01)i, A61P33/02(2006.01)i, C07C59/82(2006.01)i

出願人（氏名又は名称）
学校法人青山学院

１．この見解書は次の内容を含む。

- ☑ 第Ｉ欄　見解の基礎
- ☐ 第Ⅱ欄　優先権
- ☐ 第Ⅲ欄　新規性、進歩性又は産業上の利用可能性についての見解の不作成
- ☐ 第Ⅳ欄　発明の単一性の欠如
- ☑ 第Ⅴ欄　ＰＣＴ規則43の2.1(a)(i)に規定する新規性、進歩性又は産業上の利用可能性についての見解、それを裏付けるための文献及び説明
- ☐ 第Ⅵ欄　ある種の引用文献
- ☐ 第Ⅶ欄　国際出願の不備
- ☐ 第Ⅷ欄　国際出願に対する意見

２．今後の手続き
国際予備審査の請求がされた場合は、出願人がこの国際調査機関とは異なる国際予備審査機関を選択し、かつ、その国際予備審査機関がＰＣＴ規則66.1の2(b)の規定に基づいて国際調査機関の見解書を国際予備審査機関の見解書とみなさない旨を国際事務局に通知していた場合を除いて、この見解書は国際予備審査機関の最初の見解書とみなされる。

この見解書が上記のように国際予備審査機関の見解書とみなされる場合、様式ＰＣＴ／ＩＳＡ／２２０を送付した日から３月又は優先日から２２月のうちいずれか遅く満了する期限が経過するまでに、出願人は国際予備審査機関に、適当な場合は補正書とともに、答弁書を提出することができる。

さらなる選択肢は、様式ＰＣＴ／ＩＳＡ／２２０を参照すること。

３．さらなる詳細は、様式ＰＣＴ／ＩＳＡ／２２０の備考を参照すること。

見解書を作成した日
２３．０３．２０１１

名称及びあて先 日本国特許庁（ＩＳＡ／ＪＰ） 郵便番号１００－８９１５ 東京都千代田区霞が関三丁目４番３号	特許庁審査官（権限のある職員） 近藤　政克 電話番号　０３－３５８１－１１０１　内線　３４８３	４Ｖ	９７３４

国際調査機関の見解書

国際出願番号　ＰＣＴ／ＪＰ２０１１／０５５２９２

第Ｉ欄　見解の基礎

１．言語に関し、この見解書は以下のものに基づき作成した。

☑ 出願時の言語による国際出願

☐ 出願時の言語から国際調査のための言語である ＿＿＿＿＿＿ 語に翻訳された、この国際出願の翻訳文（ＰＣＴ規則12.3(a)及び23.1(b)）

２．☐ この見解書は、ＰＣＴ規則 91 の規定により国際調査機関が認めた又は国際調査機関に通知された明らかな誤りの訂正を考慮して作成した（ＰＣＴ規則 43 の 2.1(b)）。

３．この国際出願で開示されたヌクレオチド又はアミノ酸配列に関して、提出された以下の配列表に基づき見解書を作成した。

ａ．提出手段　☐ 紙形式

☐ 電子形式

ｂ．提出時期　☐ 出願時の国際出願に含まれていたもの

☐ この国際出願と共に電子形式により提出されたもの

☐ 出願後に、調査のために、この国際調査機関に提出されたもの

４．☐ さらに、複数の版の配列表又は配列表の写しを提出した場合、出願後に提出した配列の写し若しくは追加して提出した配列の写しが、出願時に提出した配列と同一である旨又は出願時の開示を超える事項を含まない旨の陳述書の提出があった。

５．補足意見：

国際調査機関の見解書

国際出願番号　ＰＣＴ／ＪＰ２０１１／０５５２９２

第Ｖ欄　新規性、進歩性又は産業上の利用可能性についてのＰＣＴ規則 43 の 2.1(a)(i)に定める見解、それを裏付ける文献及び説明

１．　見解

新規性（N）	請求項	１－２	有
	請求項		無
進歩性（ＩＳ）	請求項	１－２	有
	請求項		無
産業上の利用可能性（ＩＡ）	請求項	１－２	有
	請求項		無

２．　文献及び説明

・請求項１－２に係る発明は、国際調査報告で引用された何れの文献にも開示されておらず、新規性・進歩性を有する。

とくに、本願の式（３）で表される化学構造の化合物については、何れの文献にも開示されていない。

I. List of Required Documents

b. A copy of all claims which were indicated as having novelty, inventive step and industrial applicability of the corresponding PCT application

- All claims which were determined to be patentable by the JPO (in Japanese)

Claims

請求の範囲

[請求項1]　式（３）

[化3]

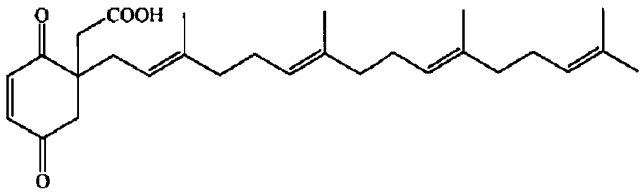

（３）

で表される抗リーシュマニア化合物。

[請求項2]　請求項１記載の抗リーシュマニア化合物またはその薬理上許容される塩を有効成分として含有することを特徴とする抗リーシュマニア薬。

I. List of Required Documents

c. English translations of the documents in a. and b. along with a statement that the English translations are accurate

- An English language translation of the claims which were indicated as having novelty, inventive step and industrial applicability in the above-identified corresponding PCT application

- An English language translation of the latest international work product (WO/ISA, WO/IPEA, or IPER)

- Statement that the English Translation is accurate for the claims which were indicated as having novelty, inventive step and industrial applicability in the above-identified corresponding PCT application

{Claims}

{Claim 1}

An anti-leishmanial compound represented by formula (3):

{Chem. 3}

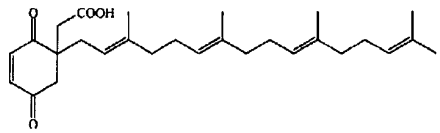

(3)

{Claim 2}

An anti-leishmanial drug comprising the anti-leishmanial compound according to claim 1 or a pharmacologically acceptable salt thereof as an active ingredient.

Partial English translation of NOTICE (Form PCT/ISA/220)

Date of mailing:	April 5, 2011
Agent's file reference:	PCT1102AG
International application No.:	PCT/JP2011/055292
International application date:	March 8, 2011
Applicant:	Aoyama Gakuin Educational Foundation

1. ☒ The applicant is hereby notified that International Search Report and Written Opinion of International Searching Authority were issued, and transmitted together with this notification.

2. ☐ (omitted)

3. ☐ (omitted)

4. ☐ (omitted)

Authorized officer: Commissioner of Japan Patent Office
Tel. No.: 03-3581-1101, extension 3483

Partial English translation of Written Opinion (Form PCT/ISA/237)

Date of mailing:	April 5, 2011
Agent's file reference:	PCT1102AG
International application No.:	PCT/JP2011/055292
International application date:	March 8, 2011
Priority date:	October 19, 2010
IPC Int'l Cl.:	C07C403/02(2006.01)i, 61K31/202(2006.01)i A61P33/02(2006.01)i, C07C59/82(2006.01)i
Applicant:	Aoyama Gakuin Educational Foundation

1. This report contains indications relating to the following items:

- [x] Box No. I Basis of the report
- [ ] Box No. II Priority
- [ ] Box No. III Non-establishment of opinion with regard to novelty, inventive step and industrial applicability
- [ ] Box No. IV Lack of unity of invention
- [x] Box No. V Reasoned statement under Rule 43bis.1(a)(i) with regard to novelty, inventive step or industrial applicability; citations and explanations supporting such statement
- [ ] Box No. VI Certain documents cited
- [ ] Box No. VII Certain defects in the international application
- [ ] Box No. VIII Certain observations on the international application

2. Further Action: (omitted)

3. For further details, see notes to Form PCT/ISA/220

Date of completion of this opinion: March 23, 2011

JPO Examiner (Authorized officer): Masakatsu KONDO

Tel. No.: 03-3581-1101, extension 3483

[WRITTEN OPINION OF THE INTERNATIONAL SEARCHING AUTHORITY]

International application No.:	PCT/JP2011/055292

Box No. I Basis of this opinion

1. With regard to the language, this opinion has been established on the basis of:

☒ the international application in the language in which it was filed

☐ a translation of the international application into _____, which is the language of a translation furnished for the purposes of international search (Rules12.3(a) and 23.1(b))

2. ☐ This opinion has been established taking into account the rectification of an obvious mistake authorized by or notified to this Authority under Rule 91 (Rule 43 bis.1(a)).

3. With regard to any nucleotide and/or amino acid sequence disclosed in the international application and necessary to the claimed invention, this opinion has been established on the basis of:

a. type of material

☐ a sequence listing

☐ table(s) related to the sequence listing

b. format of material

☐ on paper

☐ in electronic form

c. time of filing/furnishing

☐ contained in the international application as filed

☐ filed together with the international application in electronic form

☐ furnished subsequently to this Authority for the purposes of search

4. ☐ In addition, in the case that --- (omitted).

5. Additional Comments:

Box No. V Reasoned statement under Rule 43bis.1(a)(i) with regard to novelty, inventive step or industrial applicability; citations and explanations supporting such statement

1. Statement

Novelty (N)	Claims	1-2	YES
	Claims		NO
Inventive step (IS)	Claims	1-2	YES
	Claims		NO
Industrial applicability (IA)	Claims	1-2	YES
	Claims		NO

2. Citations and explanations:

The invention as in Claims 1 and 2 is not disclosed in any of the citations in International Search Report; hence, Claims 1 and 2 involve novelty and inventive step.

Especially, the compound of chemical structure which is represented by formula (3) of this application is not disclosed in any of citation.

VERIFICATION OF A TRANSLATION

Re: International Patent Application **No. PCT/JP2011/055292** filed on **March 8, 2011**.

I, Yoshihiro FUJIMOTO of

Addres 1-3-25-202, Sakura, Setagaya-ku, Tokyo

156-0053 JAPAN

hereby declare that I am the translator of the document attached and certify that the following is a true translation to the best of my knowledge and belief.

Signature of Translator: Y. Fujimoto

Date this: 25th day of August, 2011

I. List of Required Documents

d. Information Disclosure Statement listing the documents cited in the International work products (WO/ISA, WO/IPEA, or IPER) of the corresponding PCT application

- The Written Opinion of the International Searching Authority does not cite any references.

UNITED STATES PATENT AND TRADEMARK OFFICE

Commissioner for Patents
United States Patent and Trademark Office
P.O. Box 1450

MAILED

MAR 14 2012

OFFICE OF PETITIONS

OLIFF & BERRIDGE, PLC
P.O. BOX 320850
ALEXANDRIA VA 22320-4850

In re Application of
Junji KIMURA et al.
Application No. 13/146,366
Filed: November 1, 2011
Atty. Docket No.: 150033
For: ANTI-LEISHMANIAL COMPOUND AND ANTI-LEISHMANIAL DRUG

: DECISION ON REQUEST TO
: PARTICIPATE IN PCT-PPH PROGRAM
: AND PETITION TO MAKE SPECIAL
: UNDER 37 CFR 1.102(a)

This is a decision on the request to participate in the PCT Patent Prosecution Highway (PCT-PPH) program and the petition under 37 CFR 1.102(a), filed September 22, 2011, to make the above-identified application special.

The request and petition are **DISMISSED.**

A grantable request to participate in the PCT –PPH program and petition to make special under 37 CFR 1.102(a) require:

(1) the U.S. application must have an eligible relationship to one or more PCT application where the ISA or IPEA are the JPO, EPO, KIPO, IPAU, Russia, Spain, Finland, Austria, or USPTO;

(2) at least one claim in the PCT application has novelty, inventive step, and industrial applicability and must be free of any observations in Box VIII in the latest work product in the international stage or applicant must identify and explain why the claim(s) is/are not subject to the observation in Box VIII;

(3) applicant must submit a copy of the claim(s) from the PCT application(s) that have novelty, inventive step, and industrial applicability along with an English translation thereof and a statement that the English translation is accurate, if the claims are not in the English language;

(4) all the claims in the U.S. application must sufficiently correspond or be amended to sufficiently correspond to the claim(s) that have novelty, inventive step, and industrial applicability in the PCT application(s);

(5) examination of the U.S. application has not begun;

(6) applicant must submit a copy of the latest international work product from the PCT application indicating that the claim(s) have novelty, inventive step, and industrial applicability along with an English translation thereof;

(7) applicant must submit an IDS listing the documents cited by the PCT examiner in the international work product along with copies of documents except U.S. patents or U.S. patent application publications; and

(8) applicant is required to submit a claims correspondence table in English which indicates how all the claims in the U.S. application correspond to the claims indicated as having novelty, inventive step, and industrial applicability in the latest international work product.

Requirements (1) to (3) and (5) to (8) above are considered to have been met. However, the request to participate in the PPH program and petition fail to meet requirement (4).

Regarding requirement (4), it cannot be determined if the claims in the U.S. application sufficiently correspond to the claims in the PCT application because the U.S. application fails to include claims.

Applicant is given **ONE** opportunity with a time period of **ONE MONTH** or **THIRTY DAYS**, whichever is longer, from the mailing date of this decision to correct the deficiencies. **NO EXTENSION OF TIME UNDER 37 CFR 1.136 IS PERMITTED**. If the deficiencies are not corrected within the time period given, the application will await action in its regular turn.

Response must be filed via the Electronic Filing System (EFS) using the document description: Petition to make special under Patent Pros. Hwy. Any preliminary amendments and IDS submitted with the PPH documents must be separately indexed as a preliminary amendment and IDS, respectively.

Telephone inquiries concerning this decision should be directed to Robert DeWitty, Petition Attorney, Office of Petitions at 571-272-8427.

All other inquiries concerning the examination or status of the application is accessible in the PAIR system at http://www.uspto.gov/ebc/index.html.

David Bucci
Petitions Examiner
Office of Petitions

PATENT APPLICATION

IN THE UNITED STATES PATENT AND TRADEMARK OFFICE

In re the Application of

Junji KIMURA et al. | Group Art Unit:

Application No.: 13/146,366 | Examiner:

Filed: November 1, 2011 | Docket No.: 150033

For: ANTI-LEISHMANIAL COMPOUND AND ANTI-LEISHMANIAL DRUG

RESPONSE TO DECISION ON REQUEST TO PARTICIPATE IN PCT-PPH PROGRAM AND PETITION TO MAKE SPECIAL UNDER 37 CFR 1.102(a)

Commissioner for Patents
P.O. Box 1450
Alexandria, VA 22313-1450

Sir:

In reply to the March 14, 2012, "Decision On Request To Participate In PCT-PPH Program In PCT-PPH Program and Petition To Make Special Under 37 C.F.R. §1.102(a)," please consider the following:

Remarks.

REMARKS

The courtesies extended to Applicants' representative by Petition Attorney Robert DeWitty ("Mr. DeWitty") and Mr. DeWitty's supervisor, Petition Attorney Anthony Knight ("Mr. Knight") during telephone conversations held on April 2 and April 3, are appreciated. During these conversations, both Mr. DeWitty and Mr. Knight admitted that Applicants' Request To Participate In PCT-PPH Program and Petition To Make Special Under 37 C.F.R. §1.102(a) was erroneously denied. The reasons presented during these conversations as warranting favorable action are discussed further below.

On March 14, the United States Patent and Trademark Office erroneously denied Applicants' PCT-PPH Request by issuing a "Decision On Request To Participate In PCT-PPH Program and Petition To Make Special Under 37 C.F.R. §1.102(a)" and asserting that "it cannot be determined [whether] the claims in the U.S. application sufficiently correspond to the claims in the PCT application because the U.S. application fails to include claims." *See* page 2 of the USPTO's March 14 decision. However, in view of Applicants' September 22, 2011 submission to the USPTO and as further admitted by both Mr. DeWitty and Mr. Knight during telephone conversations held on April 2 and April 3, the USPTO's position is incorrect.

On September 22, 2011, Applicants submitted the following to the UPSTO: (1) a Request for Participation in the PCT-PPH Pilot Program between the JPO and the USPTO, (2) a claim identification chart asserting that pending claims 1 and 2 for this U.S. Patent Application correspond to PCT claims 1 and 2 in the corresponding PCT Application, (3) the PCT International Search Report and Written Opinion written in Japanese and a partial English translation of the PCT Search Report and Written Opinion, (4) the Japanese version of the PCT claims and an English version of the corresponding U.S. Patent Application's claims, and (5) a partial translation of the PCT Search Report and a statement identifying that

the PCT claims were found to have novelty, inventive step, and industrial applicability. Based on Applicants' September 22, 2011 submission it is clear that the pending U.S. Patent Application (1) has claims, (2) the pending U.S. claims 1 and 2 correspond to the PCT Application's claims 1 and 2, and (3) these claims were found to have novelty, inventive step, and industrial applicability during the PCT stage. Thus, for at least these reasons, it is clear that the claims in the pending U.S. Patent Application sufficiently correspond to the claims in the PCT Application and that the USPTO's March 14, "Decision On Request To Participate In PCT-PPH Program and Petition To Make Special Under 37 C.F.R. §1.102(a)" erroneously denied Applicant's request.

As stated above, during the conversations held on April 2 and April 3 with Mr. DeWitty and Mr. Knight, both Mr. DeWitty and Mr. Knight admitted that the USPTO's decision was erroneous. Furthermore, Mr. DeWitty stated that if Applicants formally respond to this decision, the decision would be withdrawn and that Applicants' Request to Participate in the PCT-PPH Program would be granted.

Conclusion

In view of the foregoing, it is respectfully submitted that Applicants' Request to Participate in PCT-PPH Program is proper, and Applicants' request should be granted.

Should Mr. DeWitty believe that anything further would be desirable in order to expedite this request, Mr. DeWitty is invited to contact the undersigned at the telephone number set forth below.

Respectfully submitted,

James A. Oliff
Registration No. 27,075

John A. Radi
Registration No. 59,345

JAO:JAR/jcs

Date: April 11, 2012

OLIFF & BERRIDGE, PLC
P.O. Box 320850
Alexandria, Virginia 22320-4850
Telephone: (703) 836-6400

DEPOSIT ACCOUNT USE AUTHORIZATION
Please grant any extension necessary for entry of this filing; Charge any fee due to our Deposit Account No. 15-0461

PTO/SB/20PCT-US (09-10)
Approved for use through 01/31/2012. OMB 0651-0058
U.S. Patent and Trademark Office; U. S. DEPARTMENT OF COMMERCE
Under the Paperwork Reduction Act of 1995, no persons are required to respond to a collection of information unless it displays a valid OMB control number.

REQUEST FOR PARTICIPATION IN THE PATENT COOPERATION TREATY - PATENT PROSECUTION HIGHWAY (PCT-PPH) PILOT PROGRAM IN A U.S. APPLICATION WHERE THE USPTO WAS THE ISA OR IPEA

Application No:	Unknown	Filing date:	Herewith
First Named Inventor:	Peter R. Anderson		
Title of the Invention:	CONFIGURING AND CONTROLLING WAGERING GAME COMPATIBILITY		

THIS REQUEST FOR PARTICIPATION IN THE PCT-PPH PILOT PROGRAM ALONG WITH THE REQUIRED DOCUMENTS MUST BE SUBMITTED VIA EFS-WEB. INFORMATION REGARDING EFS-WEB IS AVAILABLE AT HTTP://WWW.USPTO.GOV/EBC/EFS_HELP.HTML

APPLICANT HEREBY REQUESTS PARTICIPATION IN THE PCT-PPH PROGRAM AND PETITIONS TO MAKE THE ABOVE-IDENTIFIED APPLICATION SPECIAL UNDER THE PCT-PPH PROGRAM.

The above-identified application is (1) a national stage entry of the corresponding PCT application, or (2) a national stage entry of another PCT application which claims priority to the corresponding PCT application, or (3) a national application that claims domestic/ foreign priority to the corresponding PCT application, or (4) a national application which forms the basis for the priority claim in the corresponding PCT application, or (5) a continuing application of a U.S. application that satisfies one of (1) to (4) above, or (6) a U.S. application that claims domestic benefit to a U.S. provisional application which forms the basis for the priority claim in the corresponding PCT application.

The corresponding PCT application number(s) is/are: PCT/US10/22295

The international date of the corresponding PCT application(s) is/are: Jan-27-2010

I. List of Required Documents:

a. **A copy of the latest international work product (WO/ISA, WO/IPEA, or IPER) in the above–identified corresponding PCT application(s)**

- [x] Is attached
- [ ] Is not attached because the document is already in the U.S. application.

b. **A copy of all claims which were indicated as having novelty, inventive step and industrial applicability in the above-identified corresponding PCT application(s).**

- [x] Is attached.
- [ ] Is not attached because the document is already in the U.S. application.

c. **English translations of the documents in a. and b. above are attached (if the documents are not in the English language). A statement that the English translation is accurate is attached for the document in b. above.**

This collection of information is required by 35 U.S.C. 119, 37 CFR 1.55, and 37 CFR 1.102(d). The information is required to obtain or retain a benefit by the public, which is to file (and by the USPTO to process) an application. Confidentiality is governed by 35 U.S.C. 122 and 37 CFR 1.11 and 1.14. This collection is estimated to take 2 hours to complete, including gathering, preparing, and submitting the completed application form to the USPTO. Time will vary depending upon the individual case. Any comments on the amount of time you require to complete this form and/or suggestions for reducing this burden should be sent to the Chief Information Officer, U.S. Patent and Trademark Office, U.S. Department of Commerce, P.O. Box 1450, Alexandria, VA 22313-1450. DO NOT SEND FEES OR COMPLETED FORMS TO THIS ADDRESS.

Under the Paperwork Reduction Act of 1995, no persons are required to respond to a collection of information unless it displays a valid OMB control number.

REQUEST FOR PARTICIPATION IN THE PCT-PPH PILOT PROGRAM IN A U.S. APPLICATION WHERE THE USPTO WAS THE ISA OR IPEA

(continued)

Application No.:	Unknown
First Named Inventor:	Peter R. Anderson

d. **(1) An information disclosure statement listing the documents cited in the international work products (ISR, WO/ISA, WO/IPEA, IPER) of the corresponding PCT application.**

- [x] Is attached
- [ ] Has already been filed in the above-identified U.S. application on _____

(2) Copies of all documents (except) for U.S. patents or U.S. patent application publications)

- [x] Are attached.
- [ ] Have already been filed in the above-identified U.S. application on _____

II. Claims Correspondence Table:

Claims in US Application	Patentable Claims in the corresponding PCT Application	Explanation regarding the correspondence
1-25	1-25	Same claims.

III. All the claims in the US application sufficiently correspond to the patentable claims in the corresponding PCT application.

Signature /Andrew DeLizio	Date July 26, 2011
Name (Print/Typed) Andrew DeLizio	Registration Number 52806

Privacy Act Statement

The **Privacy Act of 1974 (P.L. 93-579)** requires that you be given certain information in connection with your submission of the attached form related to a patent application or patent. Accordingly, pursuant to the requirements of the Act, please be advised that: (1) the general authority for the collection of this information is 35 U.S.C. 2(b)(2); (2) furnishing of the information solicited is voluntary; and (3) the principal purpose for which the information is used by the U.S. Patent and Trademark Office is to process and/or examine your submission related to a patent application or patent. If you do not furnish the requested information, the U.S. Patent and Trademark Office may not be able to process and/or examine your submission, which may result in termination of proceedings or abandonment of the application or expiration of the patent.

The information provided by you in this form will be subject to the following routine uses:

1. The information on this form will be treated confidentially to the extent allowed under the Freedom of Information Act (5 U.S.C. 552) and the Privacy Act (5 U.S.C 552a). Records from this system of records may be disclosed to the Department of Justice to determine whether disclosure of these records is required by the Freedom of Information Act.
2. A record from this system of records may be disclosed, as a routine use, in the course of presenting evidence to a court, magistrate, or administrative tribunal, including disclosures to opposing counsel in the course of settlement negotiations.
3. A record in this system of records may be disclosed, as a routine use, to a Member of Congress submitting a request involving an individual, to whom the record pertains, when the individual has requested assistance from the Member with respect to the subject matter of the record.
4. A record in this system of records may be disclosed, as a routine use, to a contractor of the Agency having need for the information in order to perform a contract. Recipients of information shall be required to comply with the requirements of the Privacy Act of 1974, as amended, pursuant to 5 U.S.C. 552a(m).
5. A record related to an International Application filed under the Patent Cooperation Treaty in this system of records may be disclosed, as a routine use, to the International Bureau of the World Intellectual Property Organization, pursuant to the Patent Cooperation Treaty.
6. A record in this system of records may be disclosed, as a routine use, to another federal agency for purposes of National Security review (35 U.S.C. 181) and for review pursuant to the Atomic Energy Act (42 U.S.C. 218(c)).
7. A record from this system of records may be disclosed, as a routine use, to the Administrator, General Services, or his/her designee, during an inspection of records conducted by GSA as part of that agency's responsibility to recommend improvements in records management practices and programs, under authority of 44 U.S.C. 2904 and 2906. Such disclosure shall be made in accordance with the GSA regulations governing inspection of records for this purpose, and any other relevant (*i.e.*, GSA or Commerce) directive. Such disclosure shall not be used to make determinations about individuals.
8. A record from this system of records may be disclosed, as a routine use, to the public after either publication of the application pursuant to 35 U.S.C. 122(b) or issuance of a patent pursuant to 35 U.S.C. 151. Further, a record may be disclosed, subject to the limitations of 37 CFR 1.14, as a routine use, to the public if the record was filed in an application which became abandoned or in which the proceedings were terminated and which application is referenced by either a published application, an application open to public inspection or an issued patent.
9. A record from this system of records may be disclosed, as a routine use, to a Federal, State, or local law enforcement agency, if the USPTO becomes aware of a violation or potential violation of law or regulation.

UNITED STATES PATENT AND TRADEMARK OFFICE

Commissioner for Patents
United States Patent and Trademark Office
Washington, D.C. 20231
www.uspto.gov

JOSEPH P. HAMILTON
P.O. BOX 1208
SEATTLE, WA 98111-1208

In re Application of	:	
PYE, Edward	:	
U.S. Application No.: 13/146399	:	DECISION ON PETITION
PCT No.: PCT/CA2010/000057	:	
Int. Filing Date: 15 JANUARY 2010	:	
Priority Date: 16 JANUARY 2009	:	
For: ORGANOSOLV BIOREFINING OF	:	
WHOLE SUGAR CANE	:	

The petition to revive under 37 CFR 1.137(b) filed 26 July 2011, in the above-captioned application is hereby **GRANTED**.

Applicant states that the entire delay in filing the required reply from the due date was unintentional, as required by 37 CFR 1.137(b)(3). The appropriate petition fee has been submitted. A terminer disclaimer is not required as the application was filed on or after 08 June 1995. Accordingly, all requirements under 37 CFR 1.137(b) have been satisfied.

A review of the application file reveals that applicant has now provided payment of the full, U.S. Basic National Fee. Therefore, the request to revive the application abandoned under 35 U.S.C. 371(d) is granted as to the National stage in the United States of America.

This application is being forwarded to the United States Designated/Elected Office (US/DO/EO) for continued processing.

Wanda Banks
Paralegal Specialist
Office of PCT Legal Administration
Tel: (571) 272-3277

Richard Cole
PCT Legal Examiner
Office of PCT Legal Administration

UNITED STATES PATENT AND TRADEMARK OFFICE

Commissioner for Patents
United States Patent and Trademark Office
P.O. Box 1450
Alexandria, VA 22313-1450
www.uspto.gov

MAILED

MAR 09 2012

OFFICE OF PETITIONS

WINSTEAD PC
P.O. BOX 50784
DALLAS TX 75201

Applicant: Per Ingeberg
Appl. No.: 13/146,466
International Filing Date: February 25, 2010
Title: METHOD AND DEVICE FOR HANDLING OF ROPE
Attorney Docket: 47055-P057WOUS
Pub. No.: US 20110278520 A1
Pub. Date: November 17, 2011

This is a decision on the request for a corrected patent application publication under 37 CFR 1.221(b), received on December 20, 2012, for the above-identified application.

The request is DISMISSED.

Applicant requests that the application be republished because the patent application publication contains material errors wherein the preliminary amendment filed with the application on July 27, 2011 (Article 34) was not included in the publication.

37 CFR 1.221 (b) is applicable "only when the Office makes a material mistake which is apparent from Office records.... Any request for a corrected publication or revised patent application publication other than provided as provided in paragraph (a) of this section must be filed within two months from the date of the patent application publication. This period is not extendable." A material mistake must affect the public's ability to appreciate the technical disclosure of the patent application publication, to determine the scope of the patent application publication, or to determine the scope of the provisional rights that an applicant may seek to enforce upon issuance of a patent. [1]

The error noted by requestor with respect to the preliminary amendment is <u>not</u> an Office error. The patent application publication does not include a mistake regarding the failure to include the preliminary amendment to the specification because patent application publications are not required to include preliminary amendments. See 37 CFR 1.215(a). The "failure to include an amendment is not an Office error." See MPEP 1130(b). The publication accurately reflected the specification as filed.

37 C.F.R. 1.215(a) states that the patent application publication may also be based upon amendments to the specification (other than the abstract or the claims) that are reflected in a substitute specification

[1] <u>Changes to Implement Eighteen-Month Publication of Patent Applications</u>, 65 FR 57023, 57038 (Sept. 20, 2000), 1239, <u>Off. Gaz. Pat. Office Notices</u> 63, 75 (Oct. 10, 2000) (final rule).

under § 1.125(b), amendments to the abstract under § 1.121(b), amendments to the claims that are reflected in a complete claim listing under § 1.121(c), and amendments to the drawings under §1.121(d), provided that such substitute specification or amendment is submitted in sufficient time to be entered into the Office file wrapper of the application before technical preparations for publication of the application have begun. (emphasis added) 37 CFR 1.215(c) states that applicant may file an amended copy of the application for publication purposes, but such amendments, including a substitute specification, must be submitted in compliance with the Office electronic filing system requirements, and within one month of the mailing date of the first Office communication that includes a confirmation number for the application, or fourteen months of the earliest filing date for which a benefit is sought under title 35, United States Code, whichever is later.

The applicant is advised that a "request for republication of an application previously published" may be filed under 37 CFR 1.221 (a). Such a request for republication "must include a copy of the application compliance with the Office's electronic filing system requirements and be accompanied by the publication fee set forth in § 1.18 (d) and the processing fee set forth in § 1.17 (i)." If the request for republication does not comply with the electronic filing system requirements, the republication will not take place and the publication fee set forth in § 1.18 (d) will be refunded. The processing fee will be retained.

A guide for filing a request for a Pre-Grant Publication, such as a request for republication, may be found on the link below:

http://www.uspto.gov/patents/process/file/efs/guidance/index.jsp
OR
http://www.uspto.gov/ebc/portal/efs/pgpub_quickstart.pdf

Any request for republication under 37 CFR 1.221(a), must be submitted via the EFS system, as a "Pre-Grant Publication".

Inquiries relating to this matter may be directed to Karen Creasy at (571) 272-3208.

/Christopher Bottorff/

Christopher Bottorff
Petitions Examiner
Office of Petitions

UNITED STATES PATENT AND TRADEMARK OFFICE

Commissioner for Patents
United States Patent and Trademark Office
P.O. Box 1450
Alexandria, VA 22313-1450
www.uspto.gov

OBLON, SPIVAK, MCCLELLAND MAIER & NEUSTADT, L.L.P.
1940 DUKE STREET
ALEXANDRIA, VA 22314

MAILED

SEP 28 2011

PCT LEGAL ADMINISTRATION

In re Application of SILVA VALENTE	:	
U.S. Application No.: 13/146,558	:	
PCT Application No.: PCT/PT2009/000022	:	
Int. Filing Date: 20 April 2009	:	DECISION
Priority Date Claimed: 21 April 2008	:	
Attorney Docket No.: 383884US41PCT	:	
For: PRESSURE REDUCTION PLANT FOR A GAS OR GAS MIXTURE	:	

This is in response to applicant's petition under 37 CFR 1.137(b) filed 27 July 2011.

BACKGROUND

On 20 April 2009, applicant filed international application PCT/PT2009/000022, which claimed priority of an earlier Portugal application filed 21 April 2008. A copy of the international application was communicated to the USPTO from the International Bureau on 29 October 2009. The thirty-month period for paying the basic national fee in the United States expired on 21 October 2010.

On 22 October 2010, international application PCT/PT2009/000022 became abandoned as to the United States for failure to timely pay the basic national fee.

On 27 July 2011, applicant filed the present petition under 37 CFR 1.137(b).

DISCUSSION

Under 37 CFR 1.137(b), a petition requesting that an application be revived on the grounds of unintentional abandonment must be accompanied by: (1) the required reply unless previously filed, (2) the petition fee as set forth in 37 CFR 1.17(m), (3) a statement that the entire delay in filing the required reply from the due date for the reply until the filing of a grantable petition was unintentional, and (4) a terminal disclaimer if the application was filed before 08 June 1995.

With regard to item (1), applicant has provided the required reply under 35 U.S.C. 371.

With regard to item (2), applicant has provided the required petition fee.

With regard to item (3), applicant has provided the required statement.

With regard to item (4), because the international application was filed after 08 June 1995, no terminal disclaimer is required.

CONCLUSION

For the reasons above, the petition under 37 CFR 1.137(b) is GRANTED.

The application has an International Filing Date under 35 U.S.C. 363 of 20 April 2009, and a date under 35 U.S.C. 371(c)(1), (c)(2), and (c)(4) of 27 July 2011.

This application is being forwarded to the United States Designated/Elected Office (DO/EO/US) for further processing in accordance with this decision.

BryanLin

Bryan Lin
PCT Legal Examiner
PCT Legal Office

Telephone: 571-272-3303
Facsimile: 571-273-0459

PTO/SB/20PCT-KR (06-10)
Approved for use through 01/31/2012. OMB 0651-0058
U.S. Patent and Trademark Office; U. S. DEPARTMENT OF COMMERCE
Under the Paperwork Reduction Act of 1995, no persons are required to respond to a collection of information unless it displays a valid OMB control number.

REQUEST FOR PARTICIPATION IN THE PATENT COOPERATION TREATY - PATENT PROSECUTION HIGHWAY (PCT-PPH) PILOT PROGRAM BETWEEN THE KOREAN INTELLECTUAL PROPERTY OFFICE (KIPO) AND THE USPTO

Application No:	13/146,572	Filing date:	2011-07-27
First Named Inventor:	Dordunoo, Stephen K.		
Title of the Invention:	Transdermal Delivery of Diclofenac, Carbamazepine and Benzydamine		

THIS REQUEST FOR PARTICIPATION IN THE PCT-PPH PILOT PROGRAM ALONG WITH THE REQUIRED DOCUMENTS MUST BE SUBMITTED VIA EFS-WEB. INFORMATION REGARDING EFS-WEB IS AVAILABLE AT HTTP://WWW.USPTO.GOV/EBC/EFS_HELP.HTML

APPLICANT HEREBY REQUESTS PARTICIPATION IN THE PCT-PPH PROGRAM AND PETITIONS TO MAKE THE ABOVE-IDENTIFIED APPLICATION SPECIAL UNDER THE PCT-PPH PROGRAM.

The above-identified application is (1) a national stage entry of the corresponding PCT application, or (2) a national stage entry of another PCT application which claims priority to the corresponding PCT application, or (3) a national application that claims domestic/ foreign priority to the corresponding PCT application, or (4) a national application which forms the basis for the priority claim in the corresponding PCT application, or (5) a continuing application of a U.S. application that satisfies one of (1) to (4) above, or (6) a U.S. application that claims domestic benefit to a U.S. provisional application which forms the basis for the priority claim in the corresponding PCT application.

The corresponding PCT application number(s) is/are: PCT/US2010/00157

The international filing date of the corresponding PCT application(s) is/are: 2010-01-22

I. List of Required Documents:

a. **A copy of the latest international work product (WO/ISA, WO/IPEA, or IPER) in the above–identified corresponding PCT application(s)**

- [x] Is attached.
- [ ] Is not attached because the document is already in the U.S. application.

b. **A copy of all claims which were indicated as having novelty, inventive step and industrial applicability in the above-identified corresponding PCT application(s).**

- [ ] Is attached.
- [x] Is not attached because the document is already in the U.S. application.

c. **English translations of the documents in a. and b. above are attached (if the documents are not in the English language). A statement that the English translation is accurate is attached for the document in b. above.**

This collection of information is required by 35 U.S.C. 119, 37 CFR 1.55, and 37 CFR 1.102(d). The information is required to obtain or retain a benefit by the public, which is to file (and by the USPTO to process) an application. Confidentiality is governed by 35 U.S.C. 122 and 37 CFR 1.11 and 1.14. This collection is estimated to take 2 hours to complete, including gathering, preparing, and submitting the completed application form to the USPTO. Time will vary depending upon the individual case. Any comments on the amount of time you require to complete this form and/or suggestions for reducing this burden should be sent to the Chief Information Officer, U.S. Patent and Trademark Office, U.S. Department of Commerce, P.O. Box 1450, Alexandria, VA 22313-1450. DO NOT SEND FEES OR COMPLETED FORMS TO THIS ADDRESS.

Approved for use through 01/31/2012. OMB 0651-0058
U.S.Patent and Trademark Office; U.S. DEPARTMENT OF COMMERCE
Under the Paperwork Reduction Act of 1995, no persons are required to respond to a collection of information unless it displays a valid OMB control number.

REQUEST FOR PARTICIPATION IN THE PCT-PPH PILOT PROGRAM BETWEEN THE KIPO AND THE USPTO

(continued)

Application No.:	13/146,572
First Named Inventor:	Dordunoo, Stephen K.

d. **(1) An information disclosure statement listing the documents cited in the international work products (ISR, WO/ISA, WO/IPEA, IPER) of the corresponding PCT application.**

- [✔] Is attached
- [ ] Has already been filed in the above-identified U.S. application on _____

(2) Copies of all documents (except) for U.S. patents or U.S. patent application publications)

- [✔] Are attached.
- [ ] Have already been filed in the above-identified U.S. application on _____

II. Claims Correspondence Table:

Claims in US Application	Patentable Claims in the corresponding PCT Application	Explanation regarding the correspondence
1-20	1-20	Full correspondence

III. All the claims in the US application sufficiently correspond to the patentable claims in the corresponding PCT application.

Signature /s/ Michael David	Date 2011-08-18
Name (Print/Typed) Michael David	Registration Number 44,642

Privacy Act Statement

The **Privacy Act of 1974 (P.L. 93-579)** requires that you be given certain information in connection with your submission of the attached form related to a patent application or patent. Accordingly, pursuant to the requirements of the Act, please be advised that: (1) the general authority for the collection of this information is 35 U.S.C. 2(b)(2); (2) furnishing of the information solicited is voluntary; and (3) the principal purpose for which the information is used by the U.S. Patent and Trademark Office is to process and/or examine your submission related to a patent application or patent. If you do not furnish the requested information, the U.S. Patent and Trademark Office may not be able to process and/or examine your submission, which may result in termination of proceedings or abandonment of the application or expiration of the patent.

The information provided by you in this form will be subject to the following routine uses:

1. The information on this form will be treated confidentially to the extent allowed under the Freedom of Information Act (5 U.S.C. 552) and the Privacy Act (5 U.S.C 552a). Records from this system of records may be disclosed to the Department of Justice to determine whether disclosure of these records is required by the Freedom of Information Act.
2. A record from this system of records may be disclosed, as a routine use, in the course of presenting evidence to a court, magistrate, or administrative tribunal, including disclosures to opposing counsel in the course of settlement negotiations.
3. A record in this system of records may be disclosed, as a routine use, to a Member of Congress submitting a request involving an individual, to whom the record pertains, when the individual has requested assistance from the Member with respect to the subject matter of the record.
4. A record in this system of records may be disclosed, as a routine use, to a contractor of the Agency having need for the information in order to perform a contract. Recipients of information shall be required to comply with the requirements of the Privacy Act of 1974, as amended, pursuant to 5 U.S.C. 552a(m).
5. A record related to an International Application filed under the Patent Cooperation Treaty in this system of records may be disclosed, as a routine use, to the International Bureau of the World Intellectual Property Organization, pursuant to the Patent Cooperation Treaty.
6. A record in this system of records may be disclosed, as a routine use, to another federal agency for purposes of National Security review (35 U.S.C. 181) and for review pursuant to the Atomic Energy Act (42 U.S.C. 218(c)).
7. A record from this system of records may be disclosed, as a routine use, to the Administrator, General Services, or his/her designee, during an inspection of records conducted by GSA as part of that agency's responsibility to recommend improvements in records management practices and programs, under authority of 44 U.S.C. 2904 and 2906. Such disclosure shall be made in accordance with the GSA regulations governing inspection of records for this purpose, and any other relevant (*i.e.*, GSA or Commerce) directive. Such disclosure shall not be used to make determinations about individuals.
8. A record from this system of records may be disclosed, as a routine use, to the public after either publication of the application pursuant to 35 U.S.C. 122(b) or issuance of a patent pursuant to 35 U.S.C. 151. Further, a record may be disclosed, subject to the limitations of 37 CFR 1.14, as a routine use, to the public if the record was filed in an application which became abandoned or in which the proceedings were terminated and which application is referenced by either a published application, an application open to public inspection or an issued patent.
9. A record from this system of records may be disclosed, as a routine use, to a Federal, State, or local law enforcement agency, if the USPTO becomes aware of a violation or potential violation of law or regulation.

PCT/US2010/000157

PATENT COOPERATION TREATY

ADVANCE E-MAIL

From the INTERNATIONAL BUREAU

PCT

NOTIFICATION CONCERNING TRANSMITTAL OF COPY OF INTERNATIONAL PRELIMINARY REPORT ON PATENTABILITY (CHAPTER I OF THE PATENT COOPERATION TREATY)
(PCT Rule 44bis.1(c))

To:

DAVID, Michael
Whiteford, Taylor & Preston, LLP
7 St. Paul Street
Baltimore, MD 21202-1636
ETATS-UNIS D'AMERIQUE

Date of mailing *(day/month/year)* 11 August 2011 (11.08.2011)	
Applicant's or agent's file reference 084034/00002	**IMPORTANT NOTICE**

International application No.	International filing date *(day/month/year)*	Priority date *(day/month/year)*
PCT/US2010/000157	22 January 2010 (22.01.2010)	30 January 2009 (30.01.2009)

Applicant
KYDES PHARMACEUTICALS, LLC et al

The International Bureau transmits herewith a copy of the international preliminary report on patentability (Chapter I of the Patent Cooperation Treaty)

The International Bureau of WIPO 34, chemin des Colombettes 1211 Geneva 20, Switzerland Facsimile No. +41 22 338 82 70	Authorized officer Masashi Honda e-mail: pt08.pct@wipo.int

PATENT COOPERATION TREATY

PCT

INTERNATIONAL PRELIMINARY REPORT ON PATENTABILITY

(Chapter I of the Patent Cooperation Treaty)

(PCT Rule 44*bis*)

Applicant's or agent's file reference 084034/00002	**FOR FURTHER ACTION**	See item 4 below
International application No. PCT/US2010/000157	International filing date *(day/month/year)* 22 January 2010 (22.01.2010)	Priority date *(day/month/year)* 30 January 2009 (30.01.2009)
International Patent Classification (8th edition unless older edition indicated) See relevant information in Form PCT/ISA/237		
Applicant KYDES PHARMACEUTICALS, LLC		

1. This international preliminary report on patentability (Chapter I) is issued by the International Bureau on behalf of the International Searching Authority under Rule 44 *bis*.1(a).

2. This REPORT consists of a total of 4 sheets, including this cover sheet.

   In the attached sheets, any reference to the written opinion of the International Searching Authority should be read as a reference to the international preliminary report on patentability (Chapter I) instead.

3. This report contains indications relating to the following items:

☒	Box No. I	Basis of the report
☐	Box No. II	Priority
☐	Box No. III	Non-establishment of opinion with regard to novelty, inventive step and industrial applicability
☐	Box No. IV	Lack of unity of invention
☒	Box No. V	Reasoned statement under Article 35(2) with regard to novelty, inventive step or industrial applicability; citations and explanations supporting such statement
☐	Box No. VI	Certain documents cited
☐	Box No. VII	Certain defects in the international application
☐	Box No. VIII	Certain observations on the international application

4. The International Bureau will communicate this report to designated Offices in accordance with Rules 44*bis*.3(c) and 93*bis*.1 but not, except where the applicant makes an express request under Article 23(2), before the expiration of 30 months from the priority date (Rule 44*bis* .2).

	Date of issuance of this report 02 August 2011 (02.08.2011)
The International Bureau of WIPO 34, chemin des Colombettes 1211 Geneva 20, Switzerland Facsimile No. +41 22 338 82 70	Authorized officer Masashi Honda e-mail: pt08.pct@wipo.int

PATENT COOPERATION TREATY

From the
INTERNATIONAL SEARCHING AUTHORITY

To:
MICHAEL DAVID

WHITEFORD, TAYLOR & PRESTON, LLP 7 ST. PAUL STREET BALTIMORE MD 21202-1636 USA

PCT

WRITTEN OPINION OF THE INTERNATIONAL SEARCHING AUTHORITY

(PCT Rule 43bis.1)

Date of mailing *(day/month/year)*	**04 OCTOBER 2010 (04.10.2010)**
Applicant's or agent's file reference 084034/00002	**FOR FURTHER ACTION** See paragraph 2 below

International application No.	International filing date *(day/month/year)*	Priority date *(day/month/year)*
PCT/US2010/000157	**22 JANUARY 2010 (22.01.2010)**	30 JANUARY 2009 (30.01.2009)

International Patent Classification (IPC) or both national classification and IPC

A61K 9/08(2006.01)i, A61K 9/06(2006.01)i, A61K 31/195(2006.01)i, A61K 31/155(2006.01)i, A61K 31/415(2006.01)i, A61P 17/00(2006.01)i

Applicant

KYDES PHARMACEUTICALS, LLC et al

1. This opinion contains indications relating to the following items:

- [x] Box No. I Basis of the opinion
- [ ] Box No. II Priority
- [ ] Box No. III Non-establishment of opinion with regard to novelty, inventive step and industrial applicability
- [ ] Box No. IV Lack of unity of invention
- [x] Box No. V Reasoned statement under Rule 43bis.1(a)(i) with regard to novelty, inventive step or industrial applicability; citations and explanations supporting such statement
- [ ] Box No. VI Certain documents cited
- [ ] Box No. VII Certain defects in the international application
- [ ] Box No. VIII Certain observations on the international application

2. **FURTHER ACTION**

If a demand for international preliminary examination is made, this opinion will be considered to be a written opinion of the International Preliminary Examining Authority ("IPEA") except that this does not apply where the applicant chooses an Authority other than this one to be the IPEA and the chosen IPEA has notified the International Bureau under Rule 66.1bis(b) that written opinions of this International Searching Authority will not be so considered.

If this opinion is, as provided above, considered to be a written opinion of the IPEA, the applicant is invited to submit to the IPEA a written reply together, where appropriate, with amendments, before the expiration of 3 months from the date of mailing of Form PCT/ISA/220 or before the expiration of 22 months from the priority date, whichever expires later.
For further options, see Form PCT/ISA/220.

3. For further details, see notes to Form PCT/ISA/220.

Name and mailing address of the ISA/KR	Date of completion of this opinion	Authorized officer
Korean Intellectual Property Office Government Complex-Daejeon, 139 Seonsa-ro, Seo-gu, Daejeon 302-701, Republic of Korea Facsimile No. 82-42-472-7140	01 OCTOBER 2010 (01.10.2010)	LEE, MIN JUNG Telephone No.82-42-481-5603

WRITTEN OPINION OF THE INTERNATIONAL SEARCHING AUTHORITY

International application No.
PCT/US2010/000157

Box No. I Basis of this opinion

1. With regard to the **language**, this opinion has been established on the basis of :

   ☒ the international application in the language in which it was filed

   ☐ a translation of the international application into _____ , which is the language of a translation furnished for the purposes of international search (Rules 12.3(a) and 23.1(b))

2. ☐ This opinion has been established taking into account the **rectification of an obvious mistake** authorized by or notified to this Authority under Rule 91 (Rule 43*bis*.1(a))

3. With regard to any **nucleotide and/or amino acid sequence** disclosed in the international application, this opinion has been established on the basis of:

   a. a sequence listing filed or furnished
   ☐ on paper
   ☐ in electronic form

   b. time of filing or furnishing
   ☐ contained in the international application as filed.
   ☐ filed together with the international application in electronic form.
   ☐ furnished subsequently to this Authority for the purposes of search.

4. ☐ In addition, in the case that more than one version or copy of a sequence listing has been filed or furnished, the required statements that the information in the subsequent or additioanl copies is identical to that in the application as filed or does not go beyond the application as filed, as appropriate, were furnished.

5. Additional comments:

WRITTEN OPINION OF THE INTERNATIONAL SEARCHING AUTHORITY

International application No.
PCT/US2010/000157

Box No. V Reasoned statement under Rule 43bis.1(a)(i) with regard to novelty, inventive step or industrial applicability; citations and explanations supporting such statement

1. Statement

Novelty (N)	Claims	1-20	YES
	Claims	NONE	NO
Inventive step (IS)	Claims	1-20	YES
	Claims	NONE	NO
Industrial applicability (IA)	Claims	1-20	YES
	Claims	NONE	NO

2. Citations and explanations :

The present invention relates to a oily solution stable for extended periods of time at room temperature comprising: at least one active ingredient from diclofenac; carbamazepine; benzydamine base; naproxen; ibuprofen, a solvent, and an emollient.

The following document is referred to in this Written Opinion;

D1: US 6262121 B1
D2: US 4711906 A1
D3: Methods and Finding in Experimental and Clinical Pharmacology 2006, 28(2), pp. 109-114
D4: Advanced in Colloidal and Interface Science 2006, 123-126, pp. 369-385
D5: US 2004-68007 A1

1. Novelty and Inventive Step

D1 discloses the oil patches containing diclofenac sodium characterized in that diclofenac sodium, isostearic acid and a fatty acid having 10 to 18 carbon atoms which is liquid at ordinary temperature. However, the subject matter of D1 is different from that of the present invention in provided type of active ingredient and kind of solvent. D2-D5, respectively, disclose aqueous solution of diclofenac and/or lidocaine.

The prior art documents do not teach or fairly suggest oily solution of drug such as diclofenac, carbamazepine, benzydamine, naproxen, or ibuprofen provided as a free acid or base or a simple ester without water solvent, in which the active ingredient remains stable without precipitation/crystallization for sufficient periods of time.

Therefore, the subject matter of claims 1-20 is considered to be novel and involve an inventive step under PCT Article 33(2)-(3).

2. Industrial Applicability

The subject matter of claims 1-20 is considered to be industrially applicable under PCT Article 33(4).

UNITED STATES PATENT AND TRADEMARK OFFICE

Commissioner for Patents
United States Patent and Trademark Office
P.O. Box 1450
Alexandria, VA 22313-1450
www.uspto.gov

10872
RIVERSIDE LAW LLP
300 Four Falls Corporate Center, Suite 710
300 Conshohocken State Road
Conshohocken, PA

MAILED
DEC 02 2011
PCT LEGAL ADMINISTRATION

In re Application of
CALLE *et al*
U.S. Application No.: 13/146,605
PCT No.: PCT/US2010/023213
Int. Filing Date: 04 February 2010
Priority Date: 04 February 2009
Attorney's Docket No.:
47162-5066-00-US.600956
For: TISSUE ENGINEERING OF LUNG

DECISION

This is a decision on the response filed 10 October 2011 which is treated as a petition under 37 CFR 1.181. No fee is required.

BACKGROUND

On 12 August 2011, the United States Designated/Elected Office (DO/EO/US) mailed a Notification of Missing Requirements under 35 U.S.C. 371 (Form PCT/DO/EO/905) indicating that a declaration in compliance with 37 CFR 1.497(a) and (b) was required. Applicants were given two months to respond with extensions of time available pursuant to 37 CFR 1.136(a).

On 10 October 2011, applicants filed the subject response which was accompanied by, *inter alia*, an executed declaration and a corrected Application Data Sheet (ADS).

DISCUSSION

Applicants' provided a declaration where the third named inventor crossed out his last name and signed as Thomas PETERSEN. The inventor was listed as Thomas PETERSON on the international application, PCT/US2010/023213. The change was initialed by the inventor on the declaration. Applicants also provided a new ADS recording the change in last name of the inventor to PETERSEN.

Applicants state that this change was to correct the spelling of the inventor's last name.

This is treated as a typographical error. Section 1893.01(e) of the MPEP states that where a typographical or transliteration error in the spelling of an inventor's name is

discovered, a petition under 37 CFR 1.182 is not required. In such case, the Office should simply be notified of the error.

Applicants' explanation meets the requirements of the MPEP. A typographical error was made in the international application with regards to the last name of the inventor, Thomas PETERSEN.

The declaration filed 10 October 2011 is in compliance with 37 CFR 1.497(a) and (b).

CONCLUSION

Applicants' petition under 37 CFR 1.181 is **GRANTED**.

The third named inventor is recognized as Thomas PETERSEN.

This application is being forwarded to the National Stage Processing Division of the Office of PCT Operations for continued processing.

James Thomson
Attorney Advisor
Office of PCT Legal Administration

Tel.: (571) 272-3302

PTO/SB/20PCT-KR (06-10)
Approved for use through 01/31/2012. OMB 0651-0058
U.S. Patent and Trademark Office; U. S. DEPARTMENT OF COMMERCE
Under the Paperwork Reduction Act of 1995, no persons are required to respond to a collection of information unless it displays a valid OMB control number.

REQUEST FOR PARTICIPATION IN THE PATENT COOPERATION TREATY - PATENT PROSECUTION HIGHWAY (PCT-PPH) PILOT PROGRAM BETWEEN THE KOREAN INTELLECTUAL PROPERTY OFFICE (KIPO) AND THE USPTO

Application No:	To be assigned	Filing date:	Filed concurrently herewith
First Named Inventor:	Francis E. SCZERZENIE		
Title of the Invention:	Ni-Ti SEMI-FINISHED PRODUCTS AND RELATED METHODS		

THIS REQUEST FOR PARTICIPATION IN THE PCT-PPH PILOT PROGRAM ALONG WITH THE REQUIRED DOCUMENTS MUST BE SUBMITTED VIA EFS-WEB. INFORMATION REGARDING EFS-WEB IS AVAILABLE AT HTTP://WWW.USPTO.GOV/EBC/EFS_HELP.HTML

APPLICANT HEREBY REQUESTS PARTICIPATION IN THE PCT-PPH PROGRAM AND PETITIONS TO MAKE THE ABOVE-IDENTIFIED APPLICATION SPECIAL UNDER THE PCT-PPH PROGRAM.

The above-identified application is (1) a national stage entry of the corresponding PCT application, or (2) a national stage entry of another PCT application which claims priority to the corresponding PCT application, or (3) a national application that claims domestic/ foreign priority to the corresponding PCT application, or (4) a national application which forms the basis for the priority claim in the corresponding PCT application, or (5) a continuing application of a U.S. application that satisfies one of (1) to (4) above, or (6) a U.S. application that claims domestic benefit to a U.S. provisional application which forms the basis for the priority claim in the corresponding PCT application.

The corresponding PCT application number(s) is/are: PCT/US2010/054579

The international filing date of the corresponding PCT application(s) is/are: October 28, 2010

I. List of Required Documents:

a. **A copy of the latest international work product (WO/ISA, WO/IPEA, or IPER) in the above–identified corresponding PCT application(s)**

☑ Is attached.

☐ Is not attached because the document is already in the U.S. application.

b. **A copy of all claims which were indicated as having novelty, inventive step and industrial applicability in the above-identified corresponding PCT application(s).**

☑ Is attached.

☐ Is not attached because the document is already in the U.S. application.

c. **English translations of the documents in a. and b. above are attached (if the documents are not in the English language). A statement that the English translation is accurate is attached for the document in b. above.**

This collection of information is required by 35 U.S.C. 119, 37 CFR 1.55, and 37 CFR 1.102(d). The information is required to obtain or retain a benefit by the public, which is to file (and by the USPTO to process) an application. Confidentiality is governed by 35 U.S.C. 122 and 37 CFR 1.11 and 1.14. This collection is estimated to take 2 hours to complete, including gathering, preparing, and submitting the completed application form to the USPTO. Time will vary depending upon the individual case. Any comments on the amount of time you require to complete this form and/or suggestions for reducing this burden should be sent to the Chief Information Officer, U.S. Patent and Trademark Office, U.S. Department of Commerce, P.O. Box 1450, Alexandria, VA 22313-1450. DO NOT SEND FEES OR COMPLETED FORMS TO THIS ADDRESS.

Approved for use through 01/31/2012. OMB 0651-0058
U.S.Patent and Trademark Office; U.S. DEPARTMENT OF COMMERCE
Under the Paperwork Reduction Act of 1995, no persons are required to respond to a collection of information unless it displays a valid OMB control number.

REQUEST FOR PARTICIPATION IN THE PCT-PPH PILOT PROGRAM BETWEEN THE KIPO AND THE USPTO

(continued)

Application No.:	To be assigned
First Named Inventor:	Francis E. SCZERZENIE

d. **(1) An information disclosure statement listing the documents cited in the international work products (ISR, WO/ISA, WO/IPEA, IPER) of the corresponding PCT application.**

- [✓] Is attached
- [ ] Has already been filed in the above-identified U.S. application on _____

(2) Copies of all documents (except) for U.S. patents or U.S. patent application publications)

- [✓] Are attached.
- [ ] Have already been filed in the above-identified U.S. application on _____

II. Claims Correspondence Table:

Claims in US Application	Patentable Claims in the corresponding PCT Application	Explanation regarding the correspondence
1	1	US-1 identical to PCT-1
2	2	US-2 identical to PCT-2
3	3	US-3 identical to PCT-3
4	4	US-4 identical to PCT-4
5	5	US-5 amended to remove dependency on claims 2-3
6	6	US-6 identical to PCT-6
7	7	US-7 identical to PCT-7
8	8	US-8 identical to PCT-8
9	9	US-9 identical to PCT-9
10	10	Minor linguistic difference from PCT-10
11	11	US-11 amended to remove dependency on claims 2-10
12	12	US-12 identical to PCT-12
13	13	US-13 amended to remove dependency on claims 2-11
14	14	US-14 identical to PCT-14
15	15	US-15 identical to PCT-15
16	16	US-16 identical to PCT-16
17	17	US-17 identical to PCT-17
18	18	US-18 identical to PCT-18
Cont'd	Cont'd	(Continued on enclosed Claims Correspondence Table)

III. All the claims in the US application sufficiently correspond to the patentable claims in the corresponding PCT application.

Signature /Alessandro Steinfl, Reg. No. 56,448/	Date July 27, 2011
Name (Print/Typed) Alessandro Steinfl	Registration Number 56,448

Claims Correspondence Table
(continued)

Application No.: To be assigned

First Named Inventor: Francis E. SCZERZENIE

Attorney Docket No.: P457-US

II. Claims Correspondence Table (continued):

Claims in US Application	Patentable Claims in the corresponding PCT Application	Explanation regarding the correspondence
19	19	US-19 identical to PCT-19
20	20	US-20 identical to PCT-20
21	21	US-21 identical to PCT-21
22	22	US-22 identical to PCT-22
23	23	US-23 identical to PCT-23
24	24	US-24 identical to PCT-24
25	25	US-25 identical to PCT-25
26	26	Minor linguistic difference from PCT-26
27	27	US-27 amended to remove dependency on claims 17-26
28	28	US-28 amended to remove dependency on claims 17-26
29	29	US-29 identical to PCT-29
30	30	US-30 identical to PCT-30
31	31	US-31 identical to PCT-31
32	32	US-32 identical to PCT-32
33	33	US-33 identical to PCT-33
34	34	US-34 identical to PCT-34

UNITED STATES PATENT AND TRADEMARK OFFICE

UNITED STATES DEPARTMENT OF COMMERCE
United States Patent and Trademark Office
Address: COMMISSIONER FOR PATENTS
P.O. Box 1450
Alexandria, Virginia 22313-1450
www.uspto.gov

APPLICATION NO.	FILING DATE	FIRST NAMED INVENTOR	ATTORNEY DOCKET NO.	CONFIRMATION NO.
13/146,644	07/27/2011	Francis E. Sczerzenic	P457-US	6036

72932 7590 11/15/2011
Steinfl & Bruno LLP
155 N. Lake Ave. Ste 700
Pasadena, CA 91101

EXAMINER
RAEVIS, ROBERT R

ART UNIT	PAPER NUMBER
2856	

MAIL DATE	DELIVERY MODE
11/15/2011	PAPER

Please find below and/or attached an Office communication concerning this application or proceeding.

The time period for reply, if any, is set in the attached communication.

UNITED STATES PATENT AND TRADEMARK OFFICE

Commissioner for Patents
United States Patent and Trademark Office
P.O. Box 1450
Alexandria, VA 22313-1450
www.uspto.gov

Steinfl & Bruno
301 N Lake Ave Ste 810
Pasadena CA 91101

NOV 15 2011

In re Application of
SCZERENIE, *et al.*
Application No.: 13/146,644
Filed: 27 July 2011
Attorney Docket No.: P457-US
For: NI-TI SEMI-FINISHED PRODUCTS AND RELATED METHODS

: DECISION ON REQUEST TO
: PARTICIPATE IN THE PATENT
: PROSECUTION HIGHWAY
: PROGRAM AND PETITION
: TO MAKE SPECIAL UNDER
: 37 CFR 1.102(a)

This is a decision on the request to participate in the PCT Patent Prosecution Highway (PCT-PPH) pilot program and the petition under 37 CFR 1.102(a), filed on 27 July 2011, to make the above-identified application special.

The request and petition are **GRANTED**.

Discussion

A grantable request to participate in the PCT-PPH pilot program and petition to make special require:

(1) The U.S. application must have an eligible relationship to one or more PCT applications where the ISA or IPEA are the JPO, EPO, KIPO, NPI, or USPTO;

(2) At least one claim in the PCT application has novelty, inventive step, and industrial applicability and must be free of any observations in Box VIII in the latest work product in the international stage or applicant must identify and explain why the claim(s) is/are not subject to the observation in Box VIII;

(3) Applicant must submit a copy of the claim(s) from the PCT application(s) that have novelty, inventive step, and industrial applicability along with an English translation thereof and a statement that the English translation is accurate, if the claims are not in the English language;

(4) All the claims in the U.S. application must sufficiently correspond or be amended to sufficiently correspond to the claim(s) that have novelty, inventive step, and industrial applicability in the PCT application(s);

(5) Examination of the U.S. application has not begun;

(6) Applicant must submit a copy of the latest international work product from the PCT application indicating that the claim(s) have novelty, inventive step, and industrial applicability

along with an English translation thereof and a statement that the English translation is accurate if the latest international work product is not in the English language;

(7) Applicant must submit an IDS listing the documents cited by the PCT examiner in the international work product along with copies of documents except U.S. patents or U.S. patent application publications.

(8) Applicant is required to submit a claims correspondence table in English which indicates how all the claims in the U.S. application correspond to the claims indicated as having novelty, inventive step and industrial applicability in the latest international work product.

The request to participate in the PCT-PPH pilot program and petition comply with the above requirements. Accordingly, the above-identified application has been accorded "special" status.

Telephone inquiries concerning this decision should be directed to Michael Day at 571-272-1568.

All other inquiries concerning the examination or status of the application is accessible in the PAIR system at http://www.uspto.gov/ebc.index.html.

This application will be forwarded to the examiner for action on the merits commensurate with this decision once this application's formality reviews have been completed.

/Michael Day/

Michael Day
Quality Assurance Specialist
Technology Center 2800

UNITED STATES PATENT AND TRADEMARK OFFICE

Commissioner for Patents
United States Patent and Trademark Office
P.O. Box 1450
Alexandria, VA 22313-1450
www.uspto.gov

LERNER GREENBERG STEMER, LLP
P.O. BOX 2480
HOLLYWOOD, FL 33022-2480

MAILED
JAN 18 2012
OFFICE OF PETITIONS

In re Application of
Joerg Braeuer, et. al.
Application No.: 13/146,759
Filed: July 28, 2011
Attorney Docket No.: STG-09941
For: MICROSTRUCTURE, METHOD FOR PRODUCING THE SAME, DEVICE FOR BONDING A MICROSTRUCTURE AND MICROSYSTEM

: DECISION ON REQUEST TO PARTICIPATE IN THE PATENT PROSECUTION HIGHWAY PROGRAM AND PETITION TO MAKE SPECIAL UNDER 37 CFR 1.102(a)

This is a decision on the request to participate in the Patent Prosecution Highway (PPH) program and the petition under 37 CFR 1.102(a), filed November 23, 2011, to make the above-identified application special.

The request and petition are **DISMISSED**.

Discussion

A grantable request to participate in the PPH program and petition to make special require:

1. The U.S. application is
   a. a Paris Convention application which either
      i. validly claims priority under 35 U.S.C. 119(a) and 37 CFR 1.55 to one or more applications filed in the DPMA, or
      ii. validly claims priority to a PCT application that contains no priority claims,

      or
   b. a national stage application under the PCT (an application which entered the national stage in the U.S. from a PCT international application after compliance with 35 U.S.C. 371), which PCT application
      i. validly claims priority to an application filed in the DPMA, or
      ii. validly claims priority to a PCT application that contains no priority claims, or
      iii. contains no priority claim,

      or
   c. a so-called bypass application filed under 35 U.S.C. 111(a) which validly claims benefit under 35 U.S.C. 120 to a PCT application, which PCT application
      i. validly claims priority to an application filed in the DPMA, or
      ii. validly claims priority to a PCT application that contains no priority claims, or
      iii. contains no priority claim;

2. Applicant must submit a copy of:
   a. The allowable/patentable claim(s) from the DPMA application(s), and
   b. An English translation of the allowable/patentable claim(s), and

   c. A statement that the English translation is accurate;
3. Applicant must:
   a. Ensure all the claims in the U.S. application must sufficiently correspond or be amended to sufficiently correspond to the allowable/patentable claim(s) in the DPMA application(s), and
   b. Submit a claims correspondence table in English;
4. Examination of the U.S. application has not begun;
5. Applicant must submit:
   a. Documentation of prior office action:
      i. a copy of all office actions from each of the DPMA application(s) containing the allowable/patentable claim(s), and
      ii. a copy of any office action which is relevant to patentability from the DPMA application(s) issued after grant of the request to participate in the PPH pilot program, and
   b. An English language translation of the DPMA office action from (5)(a)(i)-(ii) above, and
   c. A statement that the English translation is accurate;
6. Applicant must submit:
   a. An IDS listing the documents cited by the DPMA examiner in the DPMA office action (unless already submitted in this application), and
   b. Copies of the documents except U.S. patents or U.S. patent application publications (unless already submitted in this application);

Conditions (1-4) and (6) above are considered to have been met. However, the request to participate in the PPH pilot program and petition does not appear to meet condition (5b).

Regarding the requirement of condition (5b), applicant has failed to submit an English language translation of the DPMA office action. Therefore, the request and petition cannot be granted at this time.

Applicant is given **ONE** opportunity within a time period of **ONE MONTH or THIRTY DAYS**, whichever is longer, from the mailing date of this decision to correct the deficiencies. **NO EXTENSION OF TIME UNDER 37 CFR 1.136 IS PERMITTED.** If the deficiencies are not corrected with the time period given, the application will await action in its regular turn.

Response must be filed via the Electronic Filing System (EFS) with the Document Description: Petition to make special under Patent Pros Hwy. Any preliminary amendments and IDS submitted with the PPH documents must be separately indexed as a preliminary amendment and IDS, respectively.

Inquiries concerning this decision should be directed to the undersigned at (571) 272-3226. All other inquiries concerning the examination or status of the application is accessible in the PAIR system at http://www.uspto.gov/ebc.index.html.

This application will be forwarded to the examiner for action on the merits commensurate with this decision.

/Andrea Smith/
Andrea Smith
Petitions Examiner
Office of Petitions

UNITED STATES PATENT AND TRADEMARK OFFICE

Commissioner for Patents
United States Patent and Trademark Office
P.O. Box 1450
Alexandria, VA 22313-1450
www.uspto.gov

LERNER GREENBERG STEMER, LLP
P.O. BOX 2480
HOLLYWOOD, FL 33022-2480

MAILED

MAR 14 2012

OFFICE OF PETITIONS

In re Application of
Joerg Braeuer, et. al.
Application No.: 13/146,759
Filed: July 28, 2011
Attorney Docket No.: STG-09941
For: MICROSTRUCTURE, METHOD FOR PRODUCING THE SAME, DEVICE FOR BONDING A MICROSTRUCTURE AND MICROSYSTEM

: DECISION ON REQUEST TO PARTICIPATE IN THE PATENT PROSECUTION HIGHWAY PROGRAM AND PETITION TO MAKE SPECIAL UNDER 37 CFR 1.102(a)

This is a decision on the request to participate in the Patent Prosecution Highway (PPH) program and the petition under 37 CFR 1.102(a), filed November 23, 2011 and renewed on February 17, 2012, to make the above-identified application special.

The request and petition are **GRANTED**.

Discussion

A grantable request to participate in the PPH program and petition to make special require:

1. The U.S. application is

   a. a Paris Convention application which either
      i. validly claims priority under 35 U.S.C. 119(a) and 37 CFR 1.55 to one or more applications filed in the DPMA, or
      ii. validly claims priority to a PCT application that contains no priority claims,

   or

   b. a national stage application under the PCT (an application which entered the national stage in the U.S. from a PCT international application after compliance with 35 U.S.C. 371), which PCT application
      i. validly claims priority to an application filed in the DPMA, or
      ii. validly claims priority to a PCT application that contains no priority claims, or
      iii. contains no priority claim,

   or

   c. a so-called bypass application filed under 35 U.S.C. 111(a) which validly claims benefit under 35 U.S.C. 120 to a PCT application, which PCT application
      i. validly claims priority to an application filed in the DPMA, or
      ii. validly claims priority to a PCT application that contains no priority claims, or
      iii. contains no priority claim;

2. Applicant must submit a copy of:
    a. The allowable/patentable claim(s) from the DPMA application(s), and
    b. An English translation of the allowable/patentable claim(s), and
    c. A statement that the English translation is accurate;
3. Applicant must:
    a. Ensure all the claims in the U.S. application must sufficiently correspond or be amended to sufficiently correspond to the allowable/patentable claim(s) in the DPMA application(s), and
    b. Submit a claims correspondence table in English;
4. Examination of the U.S. application has not begun;
5. Applicant must submit:
    a. Documentation of prior office action:
        i. a copy of all office actions from each of the DPMA application(s) containing the allowable/patentable claim(s), and
        ii. a copy of any office action which is relevant to patentability from the DPMA application(s) issued after grant of the request to participate in the PPH pilot program, and
    b. An English language translation of the DPMA office action from (5)(a)(i)-(ii) above, and
    c. A statement that the English translation is accurate;
6. Applicant must submit:
    a. An IDS listing the documents cited by the DPMA examiner in the DPMA office action (unless already submitted in this application), and
    b. Copies of the documents except U.S. patents or U.S. patent application publications (unless already submitted in this application);

The request to participate in the PPH pilot program and petition comply with the above requirements. Accordingly, the above-identified application has been accorded "special" status.

Inquiries concerning this decision should be directed to the undersigned at (571) 272-3226. All other inquiries concerning the examination or status of the application is accessible in the PAIR system at http://www.uspto.gov/ebc.index.html.

This application will be forwarded to the examiner for action on the merits commensurate with this decision.

/Andrea Smith/
Andrea Smith
Petitions Examiner
Office of Petitions

UNITED STATES PATENT AND TRADEMARK OFFICE

Commissioner for Patents
United States Patent and Trademark Office
P.O. Box 1450
Alexandria, VA 22313-1450
www.uspto.gov

MAILED

NOV 02 2011

PCT LEGAL ADMINISTRATION

OLIFF & BERRIDGE, PLC
P.O. BOX 320850
ALEXANDRIA VA 22320-4850

In re Application of	:	
TANAKA, et al.	:	
U.S. Application No.: 13/146,807	:	DECISION ON PETITION
PCT No.: PCT/JP2010/050462	:	
Int. Filing Date: 18 January 2010	:	UNDER 37 CFR 1.182
Priority Date: 30 January 2009	:	
Attorney's Docket No.: 150156	:	
For: DISPLAY DEVICE AND DISPLAY CONTROL DEVICE	:	

This decision is in response to applicant's "PETITION UNDER 37 C.F.R. §1.182 FOR CHANGE OF NAME OF INVENTOR" filed 28 July 2011 in the United States Patent and Trademark Office (USPTO). Applicant has provided payment of the $400.00 petition fee.

BACKGROUND

On 18 January 2010, applicant filed international application PCT/JP2010/050462, which claimed priority of an earlier application filed 30 January 2009. A copy of the International Application was forwarded to the United States Patent and Trademark Office (USPTO) from the International Bureau (IB) on 05 August 2010. Pursuant to 37 CFR 1.495, the thirty-month period for paying the basic national fee in the United States expired at midnight on 30 July 2011.

On 28 July 2011, applicant filed a transmittal letter for entry into the national stage in the United States, which was accompanied by the requisite basic national fee as required by 35 U.S.C. 371(c)(1); an English translation of the international application as filed; an Application Data Sheet; a preliminary amendment; an Information Disclosure Statement and the petition discussed herein.

DISCUSSION

The Manual of Patent Examining Procedure (MPEP) section 605.04 provides guidance for instances where an inventor has changed names. It explains that:

In cases where an inventor's name has been changed after the application has been filed and the inventor desires to change his or her name on the application, he or she must submit a petition under 37 CFR 1.182. Applicants are also strongly encouraged to submit an application data sheet (37 CFR 1.76) showing the new name. The petition should be directed to the attention of the Office of Petitions. The petition must include an appropriate petition fee and a statement signed by the inventor setting forth both names and the procedure whereby the change of name was effected, or a copy of the court order.

The present petition is accompanied by an affidavit signed by Mrs. Miki Ozawa indicating that her name has changed as a result of marriage. The affidavit sets forth both names and, as such, it is proper to grant applicant's petition at this time.

CONCLUSION

For the reasons stated above, applicant's petition under 37 CFR 1.182 is **GRANTED**.

This application is being forwarded to the National Stage Processing Branch of the Office Of PCT Operations for further processing in accord with this decision. The date under 35 U.S.C. 371(c)(1), (c)(2), and (c)(4) is **28 July 2011**.

Derek A. Putonen
Attorney Advisor
Office of PCT Legal Administration
Tel: (571) 272-3294

PTO/SB/20PCT-JP (05-10)
Approved for use through 01/31/2012. OMB 0651-0058
U.S. Patent and Trademark Office; U. S. DEPARTMENT OF COMMERCE
Under the Paperwork Reduction Act of 1995, no persons are required to respond to a collection of information unless it displays a valid OMB control number.

REQUEST FOR PARTICIPATION IN THE PATENT COOPERATION TREATY - PATENT PROSECUTION HIGHWAY (PCT-PPH) PILOT PROGRAM BETWEEN THE JAPAN PATENT OFFICE (JPO) AND THE USPTO

Application No:	13/146,814	Filing date:	07/28/2011
First Named Inventor:	Megumi KUWABARA		
Title of the Invention:	INPUT DEVICE		

THIS REQUEST FOR PARTICIPATION IN THE PCT-PPH PILOT PROGRAM ALONG WITH THE REQUIRED DOCUMENTS MUST BE SUBMITTED VIA EFS-WEB. INFORMATION REGARDING EFS-WEB IS AVAILABLE AT HTTP://WWW.USPTO.GOV/EBC/EFS_HELP.HTML

APPLICANT HEREBY REQUESTS PARTICIPATION IN THE PCT-PPH PROGRAM AND PETITIONS TO MAKE THE ABOVE-IDENTIFIED APPLICATION SPECIAL UNDER THE PCT-PPH PROGRAM.

The above-identified application is (1) a national stage entry of the corresponding PCT application, or (2) a national stage entry of another PCT application which claims priority to the corresponding PCT application, or (3) a national application that claims domestic/ foreign priority to the corresponding PCT application, or (4) a national application which forms the basis for the priority claim in the corresponding PCT application, or (5) a continuing application of a U.S. application that satisfies one of (1) to (4) above, or (6) a U.S. application that claims domestic benefit to a U.S. provisional application which forms the basis for the priority claim in the corresponding PCT application.

The corresponding PCT application number(s) is/are: PCT/2010/000459

The international date of the corresponding PCT application(s) is/are: 01/27/2010

I. List of Required Documents:

a. **A copy of the latest international work product (WO/ISA, WO/IPEA, or IPER) in the above–identified corresponding PCT application(s)**

☑ Is attached.

☐ Is not attached because the document is already in the U.S. application.

b. **A copy of all claims which were indicated as having novelty, inventive step and industrial applicability in the above-identified corresponding PCT application(s).**

☑ Is attached.

☐ Is not attached because the document is already in the U.S. application.

c. **English translations of the documents in a. and b. above are attached (if the documents are not in the English language). A statement that the English translation is accurate is attached for the document in b. above.**

This collection of information is required by 35 U.S.C. 119, 37 CFR 1.55, and 37 CFR 1.102(d). The information is required to obtain or retain a benefit by the public, which is to file (and by the USPTO to process) an application. Confidentiality is governed by 35 U.S.C. 122 and 37 CFR 1.11 and 1.14. This collection is estimated to take 2 hours to complete, including gathering, preparing, and submitting the completed application form to the USPTO. Time will vary depending upon the individual case. Any comments on the amount of time you require to complete this form and/or suggestions for reducing this burden should be sent to the Chief Information Officer, U.S. Patent and Trademark Office, U.S. Department of Commerce, P.O. Box 1450, Alexandria, VA 22313-1450. DO NOT SEND FEES OR COMPLETED FORMS TO THIS ADDRESS.

Approved for use through 01/31/2012. OMB 0651-0058
U.S.Patent and Trademark Office; U.S. DEPARTMENT OF COMMERCE

Under the Paperwork Reduction Act of 1995, no persons are required to respond to a collection of information unless it displays a valid OMB control number.

REQUEST FOR PARTICIPATION IN THE PCT-PPH PILOT PROGRAM BETWEEN THE JPO AND THE USPTO

(continued)

Application No.:	13/146,814
First Named Inventor:	Megumi KUWABARA

d. **(1) An information disclosure statement listing the documents cited in the international work products (ISR, WO/ISA, WO/IPEA, IPER) of the corresponding PCT application.**

☐ Is attached

☑ Has already been filed in the above-identified U.S. application on 07/28/2011

(2) Copies of all documents (except) for U.S. patents or U.S. patent application publications)

☐ Are attached.

☑ Have already been filed in the above-identified U.S. application on 07/28/2011

II. Claims Correspondence Table:

Claims in US Application	Patentable Claims in the corresponding PCT Application	Explanation regarding the correspondence
3	3	Direct translation
4	4	Direct translation
5	5	Direct translation

III. All the claims in the US application sufficiently correspond to the patentable claims in the corresponding PCT application.

Signature	Date 01-25-2012
Name (Print/Typed) Kathleen L. Connell	Registration Number 45,344

PATENT COOPERATION TREATY

PCT

INTERNATIONAL PRELIMINARY REPORT ON PATENTABILITY

(Chapter I of the Patent Cooperation Treaty)

(PCT Rule 44*bis*)

Applicant's or agent's file reference 10P00193WO	**FOR FURTHER ACTION**	See item 4 below
International application No. PCT/JP2010/000459	International filing date *(day/month/year)* 27 January 2010 (27.01.2010)	Priority date *(day/month/year)* 28 January 2009 (28.01.2009)
International Patent Classification (8th edition unless older edition indicated) See relevant information in Form PCT/ISA/237		
Applicant KYOCERA Corporation		

1. This international preliminary report on patentability (Chapter I) is issued by the International Bureau on behalf of the International Searching Authority under Rule 44 *bis*.1(a).

2. This REPORT consists of a total of 5 sheets, including this cover sheet.

   In the attached sheets, any reference to the written opinion of the International Searching Authority should be read as a reference to the international preliminary report on patentability (Chapter I) instead.

3. This report contains indications relating to the following items:

☒	Box No. I	Basis of the report
☐	Box No. II	Priority
☐	Box No. III	Non-establishment of opinion with regard to novelty, inventive step and industrial applicability
☐	Box No. IV	Lack of unity of invention
☒	Box No. V	Reasoned statement under Article 35(2) with regard to novelty, inventive step or industrial applicability; citations and explanations supporting such statement
☐	Box No. VI	Certain documents cited
☐	Box No. VII	Certain defects in the international application
☐	Box No. VIII	Certain observations on the international application

4. The International Bureau will communicate this report to designated Offices in accordance with Rules 44*bis*.3(c) and 93*bis*.1 but not, except where the applicant makes an express request under Article 23(2), before the expiration of 30 months from the priority date (Rule 44*bis* .2).

	Date of issuance of this report 02 August 2011 (02.08.2011)
The International Bureau of WIPO 34, chemin des Colombettes 1211 Geneva 20, Switzerland Facsimile No. +41 22 338 82 70	Authorized officer Masashi Honda e-mail: pt08.pct@wipo.int

特許協力条約

発信人　日本国特許庁（国際調査機関）

代理人
杉村　憲司
様

あて名
〒100-0013
日本国東京都千代田区霞が関三丁目２番１号
霞が関コモンゲート西館３６階

ＰＣＴ
国際調査機関の見解書
（法施行規則第40条の2）
〔ＰＣＴ規則43の2.1〕

発送日 （日.月.年）	２０．０４．２０１０
出願人又は代理人 の書類記号　10P00193WO	今後の手続きについては、下記２を参照すること。

国際出願番号	国際出願日	優先日
ＰＣＴ／ＪＰ２０１０／０００４５９	（日.月.年）　２７．０１．２０１０	（日.月.年）　２８．０１．２００９

国際特許分類（ＩＰＣ）Int.Cl. G06F3/048(2006.01)i, G06F3/041(2006.01)i

出願人（氏名又は名称）
京セラ株式会社

１．この見解書は次の内容を含む。

- ☑ 第Ｉ欄　見解の基礎
- ☐ 第Ⅱ欄　優先権
- ☐ 第Ⅲ欄　新規性、進歩性又は産業上の利用可能性についての見解の不作成
- ☐ 第Ⅳ欄　発明の単一性の欠如
- ☑ 第Ⅴ欄　ＰＣＴ規則43の2.1(a)(i)に規定する新規性、進歩性又は産業上の利用可能性についての見解、それを裏付けるための文献及び説明
- ☐ 第Ⅵ欄　ある種の引用文献
- ☐ 第Ⅶ欄　国際出願の不備
- ☐ 第Ⅷ欄　国際出願に対する意見

２．今後の手続き
国際予備審査の請求がされた場合は、出願人がこの国際調査機関とは異なる国際予備審査機関を選択し、かつ、その国際予備審査機関がＰＣＴ規則66.1の2(b)の規定に基づいて国際調査機関の見解書を国際予備審査機関の見解書とみなさない旨を国際事務局に通知していた場合を除いて、この見解書は国際予備審査機関の最初の見解書とみなされる。

この見解書が上記のように国際予備審査機関の見解書とみなされる場合、様式ＰＣＴ／ＩＳＡ／２２０を送付した日から３月又は優先日から２２月のうちいずれか遅く満了する期限が経過するまでに、出願人は国際予備審査機関に、適当な場合は補正書とともに、答弁書を提出することができる。

さらなる選択肢は、様式ＰＣＴ／ＩＳＡ／２２０を参照すること。

３．さらなる詳細は、様式ＰＣＴ／ＩＳＡ／２２０の備考を参照すること。

見解書を作成した日
０７．０４．２０１０

名称及びあて先 日本国特許庁（ＩＳＡ／ＪＰ） 郵便番号１００－８９１５ 東京都千代田区霞が関三丁目４番３号	特許庁審査官（権限のある職員） 岩橋　龍太郎 電話番号　０３－３５８１－１１０１　内線　３５２１	５Ｅ　３７９０

国際調査機関の見解書

国際出願番号　ＰＣＴ／ＪＰ２０１０／０００４５９

第Ｉ欄　見解の基礎

１．言語に関し、この見解書は以下のものに基づき作成した。

☑ 出願時の言語による国際出願

☐ 出願時の言語から国際調査のための言語である ＿＿＿＿＿＿ 語に翻訳された、この国際出願の翻訳文（ＰＣＴ規則12.3(a)及び23.1(b)）

２．☐ この見解書は、ＰＣＴ規則 91 の規定により国際調査機関が認めた又は国際調査機関に通知された明らかな誤りの訂正を考慮して作成した（ＰＣＴ規則 43 の 2.1(b)）。

３．この国際出願で開示されたヌクレオチド又はアミノ酸配列に関して、提出された以下の配列表に基づき見解書を作成した。

ａ．提出手段　☐ 紙形式

☐ 電子形式

ｂ．提出時期　☐ 出願時の国際出願に含まれていたもの

☐ この国際出願と共に電子形式により提出されたもの

☐ 出願後に、調査のために、この国際調査機関に提出されたもの

４．☐ さらに、複数の版の配列表又は配列表の写しを提出した場合、出願後に提出した配列の写し若しくは追加して提出した配列の写しが、出願時に提出した配列と同一である旨又は出願時の開示を超える事項を含まない旨の陳述書の提出があった。

５．補足意見：

国際調査機関の見解書

国際出願番号　ＰＣＴ／ＪＰ２０１０／０００４５９

第Ｖ欄　新規性、進歩性又は産業上の利用可能性についてのＰＣＴ規則43の2.1(a)(i)に定める見解、それを裏付ける文献及び説明

１．　見解

新規性（N）	請求項	1-5	有
	請求項		無
進歩性（ＩＳ）	請求項	3-5	有
	請求項	1,2	無
産業上の利用可能性（ＩＡ）	請求項	1-5	有
	請求項		無

２．　文献及び説明

文献１：JP 2000-207079 A（株式会社日立製作所）2000.07.28,
段落【００１８】－【００６１】,【図１】－【図８】（ファミリーなし）
文献２：JP 2008-508628 A（コーニンクレッカ　フィリップス　エレクトロニクス　エヌ　ヴィ）2008.03.21, 全文, 全図 & US 2008/0094367 A1
& EP 1776630 A & WO 2006/013485 A2 & CN 1993672 A
文献３：JP 2001-202192 A（ソニー株式会社）2001.07.27,
全文, 全図（ファミリーなし）
文献４：JP 2004-070492 A（株式会社日立製作所）2004.03.04,
全文, 全図 & US 6940494 B2
文献５：JP 8-511637 A（アプル・コンピュータ・インコーポレーテッド）1996.12.03,
第１５頁第２８行－第２０頁第２４行, 第１図－第３図 & US 6307545 B1
& EP 0702811 A & WO 94/029787 A1

請求項１に係る発明は、文献１及び文献２から進歩性を有さない。

文献１には、フォルダ・ファイルアイコン画面を表示するデータ処理装置において、該データ処理装置を前後方向に移動させると拡大・縮小ルーチンが起動され、拡大時に拡大率が閾値αに達すると、画面の中心位置にあるフォルダアイコンのフォルダを自動的に開き、縮小時に縮小率が一定の閾値β以下になると、そのフォルダの上位のフォルダに対するフォルダ・ファイルアイコン画面を表示することで、フォルダのオープンもしくはクローズを、データ処理装置の前後方向への移動のみで容易に実現させる発明が記載されている。

また、文献２には、ユーザが選択可能なオプションのメニュー等の画像を、タッチスクリーンに示された圧力の値に依存してスケーリングさせる装置において、ある閾値より上の圧力を増加することによって、小さなスケールに戻る変化（ズームアウト）を起こさせることが記載されている（特に、段落【００２０】を参照。）。

したがって、文献１に記載の発明において、データ処理装置を前後方向に移動させて画像を縮小させる構成に代え、文献２に記載の、タッチスクリーンへある閾値より上の圧力を増加させてズームアウトさせる構成を採用し、画像のズームアウト時にフォルダをクローズさせることは、当業者が容易に想到し得たものである。

（補充欄へ続く）

補充欄

いずれかの欄の大きさが足りない場合

第 V.2 欄の続き

請求項２に係る発明は、文献１及び文献２から進歩性を有さない。

文献２には、スクリーンへの圧力を増加させることにより画像を拡大し、圧力を減少させることでスケールを減少させる構成も開示されている（特に、段落【００２１】を参照。）。

したがって、文献１に記載の発明において、データ処理装置を前後方向に移動させて画像を拡大又は縮小させる構成に代え、文献２に記載の、スクリーンへの圧力を増加させることにより画像を拡大し、圧力を減少させることでスケールを減少させる構成を採用し、スクリーンへの圧力を増加させることにより画像を拡大して、フォルダを自動的に開き、圧力を減少させることでスケールを減少させて、フォルダをクローズさせることは、当業者が容易に想到し得たものである。

請求項３に係る発明の、表示部に表示されたフォルダのオブジェクトの位置に対応する入力部に対する、第１の荷重基準を満たさない状態から満たす状態へ変化する押圧荷重が、荷重検出部により検出された際に、当該フォルダをオープンし、該フォルダがオープンされた後は、前記第１の荷重基準より低い第２の荷重基準を満たす状態から満たさない状態へ変化する押圧荷重が前記荷重検出部により検出された際に、当該オープンされているフォルダのうち最下層のフォルダをクローズするように制御することは、国際調査報告に引用された、いずれの文献にも記載されておらず、当業者にとって自明なものでもない。

請求項４に係る発明の、表示部に表示されたフォルダのオブジェクトの位置に対応する入力部に対する、第１の荷重基準を満たさない状態から満たす状態へ変化する押圧荷重が、荷重検出部により検出された際に、当該フォルダをオープンし、該フォルダがオープンされた後は、前記第１の荷重基準より高い第２の荷重基準を満たす状態から満たさない状態へ変化する押圧荷重が前記荷重検出部により検出された際に、当該オープンされているフォルダのうち最下層のフォルダをクローズするように制御することは、国際調査報告に引用された、いずれの文献にも記載されておらず、当業者にとって自明なものでもない。

請求項５に係る発明の、表示部に表示されたフォルダがオープンしている状態で、入力部に対する、第１の荷重基準を満たす状態から当該第１の荷重基準より低い第２の荷重基準を満たさない状態へ変化する押圧荷重が、荷重検出部により検出された際に、当該オープンしている全てのフォルダをクローズするように制御することは、国際調査報告に引用された、いずれの文献にも記載されておらず、当業者にとって自明なものでもない。

PATENT COOPERATION TREATY

PCT

INTERNATIONAL PRELIMINARY REPORT ON PATENTABILITY

(Chapter I of the Patent Cooperation Treaty)

(PCT Rule 44*bis*)

Applicant's or agent's file reference 10P00193WO	**FOR FURTHER ACTION**	See item 4 below
International application No. PCT/JP2010/000459	International filing date *(day/month/year)* 27 January 2010 (27.01.2010)	Priority date *(day/month/year)* 28 January 2009 (28.01.2009)
International Patent Classification (8th edition unless older edition indicated) See relevant information in Form PCT/ISA/237		
Applicant KYOCERA Corporation		

1. This international preliminary report on patentability (Chapter I) is issued by the International Bureau on behalf of the International Searching Authority under Rule 44 *bis*.1(a).

2. This REPORT consists of a total of 7 sheets, including this cover sheet.

   In the attached sheets, any reference to the written opinion of the International Searching Authority should be read as a reference to the international preliminary report on patentability (Chapter I) instead.

3. This report contains indications relating to the following items:

☒	Box No. I	Basis of the report
☐	Box No. II	Priority
☐	Box No. III	Non-establishment of opinion with regard to novelty, inventive step and industrial applicability
☐	Box No. IV	Lack of unity of invention
☒	Box No. V	Reasoned statement under Article 35(2) with regard to novelty, inventive step or industrial applicability; citations and explanations supporting such statement
☐	Box No. VI	Certain documents cited
☐	Box No. VII	Certain defects in the international application
☐	Box No. VIII	Certain observations on the international application

4. The International Bureau will communicate this report to designated Offices in accordance with Rules 44*bis*.3(c) and 93*bis*.1 but not, except where the applicant makes an express request under Article 23(2), before the expiration of 30 months from the priority date (Rule 44*bis* .2).

	Date of issuance of this report 09 August 2011 (09.08.2011)
The International Bureau of WIPO 34, chemin des Colombettes 1211 Geneva 20, Switzerland Facsimile No. +41 22 338 82 70	Authorized officer Masashi Honda e-mail: pt08.pct@wipo.int

PATENT COOPERATION TREATY

TRANSLATION

From the
INTERNATIONAL SEARCHING AUTHORITY

To:

PCT

WRITTEN OPINION OF THE
INTERNATIONAL SEARCHING AUTHORITY

(PCT Rule 43*bis*.1)

Date of mailing *(day/month/year)*	
Applicant's or agent's file reference 10P00193WO	**FOR FURTHER ACTION** See paragraph 2 below

International application No.	International filing date *(day/month/year)*	Priority date *(day/month/year)*
PCT/JP2010/000459	27.01.2010	28.01.2009

International Patent Classification (IPC) or both national classification and IPC

Applicant
KYOCERA Corporation

1. This opinion contains indications relating to the following items:

- [x] Box No. I — Basis of the opinion
- [ ] Box No. II — Priority
- [ ] Box No. III — Non-establishment of opinion with regard to novelty, inventive step and industrial applicability
- [ ] Box No. IV — Lack of unity of invention
- [x] Box No. V — Reasoned statement under Rule 43*bis*.1(a)(i) with regard to novelty, inventive step or industrial applicability; citations and explanations supporting such statement
- [ ] Box No. VI — Certain documents cited
- [ ] Box No. VII — Certain defects in the international application
- [ ] Box No. VIII — Certain observations on the international application

2. **FURTHER ACTION**

If a demand for international preliminary examination is made, this opinion will be considered to be a written opinion of the International Preliminary Examining Authority ("IPEA") except that this does not apply where the applicant chooses an Authority other than this one to be the IPEA and the chosen IPEA has notified the International Bureau under Rule 66.1*bis*(b) that written opinions of this International Searching Authority will not be so considered.

If this opinion is, as provided above, considered to be a written opinion of the IPEA, the applicant is invited to submit to the IPEA a written reply together, where appropriate, with amendments, before the expiration of 3 months from the date of mailing of Form PCT/ISA/220 or before the expiration of 22 months from the priority date, whichever expires later.

For further options, see Form PCT/ISA/220.

3. For further details, see notes to Form PCT/ISA/220.

Name and mailing address of the ISA/JP	Date of completion of this opinion	Authorized officer
Facsimile No.		Telephone No.

WRITTEN OPINION OF THE INTERNATIONAL SEARCHING AUTHORITY

International application No.
PCT/JP2010/000459

Box No. I **Basis of this opinion**

1. With regard to the **language**, this opinion has been established on the basis of:

   ☒ the international application in the language in which it was filed

   ☐ a translation of the international application into _____ , which is the language of a translation furnished for the purposes of international search (Rules 12.3(a) and 23.1(b)).

2. ☐ This opinion has been established taking into account the **rectification of an obvious mistake** authorized by or notified to this Authority under Rule 91 (Rule 43*bis*.1(a))

3. With regard to any **nucleotide and/or amino acid sequence** disclosed in the international application, this opinion has been established on the basis of a sequence listing filed or furnished:

   a. (means)

   ☐ on paper

   ☐ in electronic form

   b. (time)

   ☐ in the international application as filed

   ☐ together with the international application in electronic form

   ☐ subsequently to this Authority for the purposes of search

4. ☐ In addition, in the case that more than one version or copy of a sequence listing has been filed or furnished, the required statements that the information in the subsequent or additional copies is identical to that in the application as filed or does not go beyond the application as filed, as appropriate, were furnished.

5. Additional comments:

WRITTEN OPINION OF THE INTERNATIONAL SEARCHING AUTHORITY

International application No.
PCT/JP2010/000459

Box No. V **Reasoned statement under Rule 43bis.1(a)(i) with regard to novelty, inventive step or industrial applicability; citations and explanations supporting such statement**

1. Statement

Novelty (N)	Claims	1-5	YES
	Claims		NO
Inventive step (IS)	Claims	3-5	YES
	Claims	1,2	NO
Industrial applicability (IA)	Claims	1-5	YES
	Claims		NO

2. Citations and explanations:

Document 1: JP 2000-207079 A (Hitachi, Ltd.), 28 July 2000, paragraphs [0018]-[0061], fig. 1-8 (Family: none)

Document 2: JP 2008-508628 A (Koninklijke Philips Electronics N.V.), 21 March 2008, entire text, all drawings & US 2008/0094367 A1 & EP 1776630 A & WO 2006/013485 A2 & CN 1993672 A

Document 3: JP 2001-202192 A (Sony Corp.), 27 July 2001, entire text, all drawings (Family: none)

Document 4: JP 2004-070492 A (Hitachi, Ltd.), 04 March 2004, entire text, all drawings & US 6940494 B2

Document 5: JP 8-511637 A (Apple Computer, Inc.), 03 December 1996, page 15, line 28 to page 20, line 24, fig. 1-3 & US 6307545 B1 & EP 0702811 A & WO 94/029787 A1

The invention as in claim 1 does not involve an inventive step in the light of documents 1 and 2.

Document 1 describes a data processor for displaying a folder/file icon screen, in which a zoom-in or zoom-out routine is invoked by moving said data processor back and forth; when the zoom-in ratio reaches a threshold value α

during zooming in, the folder of the folder icon in the center of the screen is automatically opened, and when the zoom-out ratio falls below a certain threshold value β during zooming out, the folder/file icon screen for the higher folder of the opened folder is displayed, thereby enabling folders to be easily opened or closed by simply moving the data processor back and forth.

Furthermore, document 2 describes a device in which the scale of an image, such as an option menu that can be selected by a user, is changed depending on a pressure value registered by a touch screen; wherein, increasing the pressure having the value above a certain threshold value invokes a change (zoom out), which returns the image to a small scale (in particular, see paragraph [0020]).

Consequently, a person skilled in the art could have easily conceived of employing the configuration described in document 2, in which increasing the pressure having the value above a certain threshold value on a touch screen causes the screen to zoom out, as an alternative to the configuration in the invention described in document 1, in which moving a data processor back and forth causes an image to be reduced in size, in order to close a folder when zooming out on an image.

The invention as in claim 2 does not involve an inventive step in the light of documents 1 and 2.

Document 2 also discloses a configuration in which increasing the pressure on a screen causes an image to expand, and decreasing the pressure causes the scale to decrease (in particular, see paragraph [0021]).

Consequently, a person skilled in the art could have easily conceived of employing the configuration described in document 2, in which increasing the pressure on a screen

causes an image to expand, and decreasing the pressure causes the scale to decrease, as an alternative to the configuration in the invention described in document 1, in which moving a data processor back and forth causes an image to be reduced in size, in order to automatically open a folder by increasing the pressure on a screen to expand an image, or to close a folder by decreasing the pressure to reduce the scale.

The invention as in claim 3, in which when a load detection unit detects a pressing load, which has been applied to an input unit that corresponds to the position of a folder object displayed on a display unit and which changes from a state where a first load criterion is not satisfied to a state where the first load criterion is satisfied, said folder opens, and after said folder has opened, when the load detection unit detects a pressing load that changes from a state where a second load criterion, which is lower than the first load criterion, is satisfied to a state where the second load criterion is not satisfied, control is performed in such a manner that the lowest folder among the folders that are open is closed is not disclosed in any of the documents cited in the ISR, and would not be obvious to a person skilled in the art.

The invention as in claim 4, in which when a load detection unit detects a pressing load, which has been applied to an input unit that corresponds to the position of a folder object displayed on a display unit and which changes from a state where a first load criterion is not satisfied to a state where the first load criterion is satisfied, said folder opens, and after said folder has opened, when the load detection unit detects a pressing load that changes from a

Box No. V **Reasoned statement under Rule 43bis.1(a)(i) with regard to novelty, inventive step or industrial applicability; citations and explanations supporting such statement**

state where a second load criterion, which is higher than the first load criterion, is satisfied to a state where the second load criterion is not satisfied, control is performed in such a manner that the lowest folder among the folders that are open is closed is not disclosed in any of the documents cited in the ISR, and would not be obvious to a person skilled in the art.

The invention as in claim 5, in which, in the state where the folders displayed on a display unit are open, when a load detection unit detects a pressing load, which has been applied to an input unit and which changes from a state where a first load criterion is satisfied to a state where a second load criterion, which is lower than the first load criterion, is not satisfied, control is performed in such a manner that all of the open folders close, is not disclosed in any of the documents cited in the ISR, and would not be obvious to a person skilled in the art.

VERIFICATION OF TRANSLATION

Takashi Sugiura of Otsu, Shiga, Japan states the following:

I am familiar with both English and Japanese languages and capable of translating documents from one into the other of these languages.

I have reviewed both the claims indicated as having novelty, inventive step and industrial applicability in PCT/JP2010/000459 and the attached English translation thereof.

The attached document is a true and accurate English translation of the claims indicated as having novelty, inventive step and industrial applicability in PCT/JP2010/000459.

I declare that all statements made herein of my own knowledge are true and that all statements made on information and belief are believed to be true.

Signature: Takashi Sugiura Date: January 24, 2012

請求の範囲

[請求項1]　階層構造を有するフォルダのオブジェクトを表示する表示部と、
前記表示部に対する押圧入力を受け付ける入力部と、
前記入力部に対する押圧荷重を検出する荷重検出部と、
前記表示部に、前記フォルダがオープンして表示されている状態で、前記入力部に対する、所定の荷重基準を満たす押圧荷重が、前記荷重検出部により検出された際に、当該オープンしているフォルダをクローズするように制御する制御部と、
を備えることを特徴とする入力装置。

[請求項2]　階層構造を有するフォルダのオブジェクトを表示する表示部と、
前記表示部に対する押圧入力を受け付ける入力部と、
前記入力部に対する押圧荷重を検出する荷重検出部と、
前記表示部に表示された前記フォルダのオブジェクトの位置に対応する前記入力部に対する、所定の荷重基準を満たさない状態から満たす状態へ変化する押圧荷重が、前記荷重検出部により検出された際に、当該フォルダをオープンし、該フォルダがオープンされた後は、前記所定の荷重基準を満たす状態から満たさない状態へ変化する押圧荷重が前記荷重検出部により検出された際に、当該オープンされているフォルダをクローズするように制御する制御部と、
を備えることを特徴とする入力装置。

[請求項3]　階層構造を有するフォルダのオブジェクトを表示する表示部と、
前記表示部に対する押圧入力を受け付ける入力部と、
前記入力部に対する押圧荷重を検出する荷重検出部と、
前記表示部に表示された前記フォルダのオブジェクトの位置に対応する前記入力部に対する、第１の荷重基準を満たさない状態から満たす状態へ変化する押圧荷重が、前記荷重検出部により検出された際に、当該フォルダをオープンし、該フォルダがオープンされた後は、前記第１の荷重基準より低い第２の荷重基準を満たす状態から満たさな

い状態へ変化する押圧荷重が前記荷重検出部により検出された際に、当該オープンされているフォルダのうち最下層のフォルダをクローズするように制御する制御部と、

を備えることを特徴とする入力装置。

[請求項4]　階層構造を有するフォルダのオブジェクトを表示する表示部と、

前記表示部に対する押圧入力を受け付ける入力部と、

前記入力部に対する押圧荷重を検出する荷重検出部と、

前記表示部に表示された前記フォルダのオブジェクトの位置に対応する前記入力部に対する、第１の荷重基準を満たさない状態から満たす状態へ変化する押圧荷重が、前記荷重検出部により検出された際に、当該フォルダをオープンし、該フォルダがオープンされた後は、前記第１の荷重基準より高い第２の荷重基準を満たす状態から満たさない状態へ変化する押圧荷重が前記荷重検出部により検出された際に、当該オープンされているフォルダのうち最下層のフォルダをクローズするように制御する制御部と、

を備えることを特徴とする入力装置。

[請求項5]　階層構造を有するフォルダのオブジェクトを表示する表示部と、

前記表示部に対する押圧入力を受け付ける入力部と、

前記入力部に対する押圧荷重を検出する荷重検出部と、

前記表示部に表示された前記フォルダがオープンしている状態で、前記入力部に対する、第１の荷重基準を満たす状態から当該第１の荷重基準より低い第２の荷重基準を満たさない状態へ変化する押圧荷重が、前記荷重検出部により検出された際に、当該オープンしている全てのフォルダをクローズするように制御する制御部と、

を備えることを特徴とする入力装置。

ENGLISH CLAIMS OF PCT/JP2010/000459 CLAIMS 3 THROUGH 5

3. An input device, comprising:

a display unit configured to display an object of a folder with a hierarchical structure;

an input unit configured to receive pressing inputs with respect to the display unit;

a load detection unit configured to detect a pressing load with respect to the input unit, and

a control unit configured to control the folder such that, if a pressing load that changes from a state of not satisfying a first load standard to a state of satisfying the first load standard is detected by the load detection unit with respect to the input unit corresponding to the location of the object of the folder that is displayed on the display unit, the folder is opened, and after the folder is opened, if a pressing load that changes from a state of satisfying a second load standard which is lower than the first load standard to a state of not satisfying the second load standard is detected by the load detection unit, a folder in the lowest hierarchy among folders that are open is closed.

4. An input device, comprising:

a display unit configured to display an object of a folder with a hierarchical structure;

an input unit configured to receive pressing inputs on the display unit;

a load detection unit configured to detect a pressing load with respect to the

input unit,

and a control unit configured to control a folder such that, if a pressing load that changes from a state of not satisfying a first load standard to a state of satisfying the first load standard is detected by the load detection unit with respect to the input unit corresponding to the location of the object of the folder that is displayed on the display unit, the folder is opened, and after the folder is opened, if a pressing load that changes from a state of satisfying a second load standard which is higher than the first load standard to a state of not satisfying the second load standard is detected by the load detection unit, a folder in the lowest hierarchy among folders that are open is closed.

5. An input device, comprising:

a display unit configured to display an object of a folder with a hierarchical structure;

an input unit configured to receive pressing inputs on the display unit;

a load detection unit configured to detect a pressing load with respect to the input unit, and

a control unit configured to control the folder such that, if the folder is open and is displayed on the display unit, and if a pressing load that changes from a state of satisfying a first load standard to a state of not satisfying a second load standard which is lower than the first load standard is detected by the load detection unit with respect to the input unit, all folders which are currently open are closed.

UNITED STATES PATENT AND TRADEMARK OFFICE

Commissioner for Patents
United States Patent and Trademark Office
P.O. Box 1450

MAILED
MAR 12 2012
OFFICE OF PETITIONS

KYOCERA INTERNATIONAL INC.
INTELLECTUAL PROPERY DEPARTMENT
P.O. BOX 928289
SAN DIEGO CA 92192

In re Application of
Megumi KUWABARA et al.
Application No. 13/146,814
Filed: July 28, 2011
Atty. Docket No.: 10P00193US
For: INPUT DEVICE

: DECISION ON REQUEST TO
: PARTICIPATE IN PCT-PPH PROGRAM
: AND PETITION TO MAKE SPECIAL
: UNDER 37 CFR 1.102(a)

This is a decision on the request to participate in the PCT Patent Prosecution Highway (PCT-PPH) program and the petition under 37 CFR 1.102(a), filed January 27, 2012, to make the above-identified application special.

The request and petition are **GRANTED.**

A grantable request to participate in the PCT –PPH program and petition to make special under 37 CFR 1.102(a) require:

(1) the U.S. application must have an eligible relationship to one or more PCT application where the ISA or IPEA are the JPO, EPO, KIPO, IPAU, Russia, Spain, Finland, Austria, or USPTO;

(2) at least one claim in the PCT application has novelty, inventive step, and industrial applicability and must be free of any observations in Box VIII in the latest work product in the international stage or applicant must identify and explain why the claim(s) is/are not subject to the observation in Box VIII;

(3) applicant must submit a copy of the claim(s) from the PCT application(s) that have novelty, inventive step, and industrial applicability along with an English translation thereof and a statement that the English translation is accurate, if the claims are not in the English language;

(4) all the claims in the U.S. application must sufficiently correspond or be amended to sufficiently correspond to the claim(s) that have novelty, inventive step, and industrial applicability in the PCT application(s);

(5) examination of the U.S. application has not begun;

(6) applicant must submit a copy of the latest international work product from the PCT application indicating that the claim(s) have novelty, inventive step, and industrial applicability along with an English translation thereof;

(7) applicant must submit an IDS listing the documents cited by the PCT examiner in the international work product along with copies of documents except U.S. patents or U.S. patent application publications; and

(8) applicant is required to submit a claims correspondence table in English which indicates how all the claims in the U.S. application correspond to the claims indicated as having novelty, inventive step, and industrial applicability in the latest international work product.

The request to participate in the PCT-PPH program and petition comply with the above requirements. Accordingly, the above-identified application has been accorded "special" status.

Telephone inquiries concerning this decision should be directed to Robert DeWitty, Petitions Attorney, Office of Petitions (571-272-8427). All other inquiries concerning the examination or status of the application is accessible in the PAIR system at http://www.uspto.gov/ebc.index.html.

This application will be forwarded to Technology Center Art Unit 2629 for action commensurate with this decision.

David Bucci
Petitions Examiner
Office of Petitions

PTO/SB/20PCT-EP (05-10)
Approved for use through 01/31/2012. OMB 0651-0058
U.S. Patent and Trademark Office; U. S. DEPARTMENT OF COMMERCE
Under the Paperwork Reduction Act of 1995, no persons are required to respond to a collection of information unless it displays a valid OMB control number.

REQUEST FOR PARTICIPATION IN THE PATENT COOPERATION TREATY - PATENT PROSECUTION HIGHWAY (PCT-PPH) PILOT PROGRAM BETWEEN THE EUROPEAN PATENT OFFICE (EPO) AND THE USPTO

Application No:	13/146,836	Filing date:	July 28, 2011
First Named Inventor:	William Campbell Crawford		
Title of the Invention:	IMPREGNATED CLOTH		

THIS REQUEST FOR PARTICIPATION IN THE PCT-PPH PILOT PROGRAM ALONG WITH THE REQUIRED DOCUMENTS MUST BE SUBMITTED VIA EFS-WEB. INFORMATION REGARDING EFS-WEB IS AVAILABLE AT HTTP://WWW.USPTO.GOV/EBC/EFS_HELP.HTML

APPLICANT HEREBY REQUESTS PARTICIPATION IN THE PCT-PPH PROGRAM AND PETITIONS TO MAKE THE ABOVE-IDENTIFIED APPLICATION SPECIAL UNDER THE PCT-PPH PROGRAM.

The above-identified application is (1) a national stage entry of the corresponding PCT application, or (2) a national stage entry of another PCT application which claims priority to the corresponding PCT application, or (3) a national application that claims domestic/ foreign priority to the corresponding PCT application, or (4) a national application which forms the basis for the priority claim in the corresponding PCT application, or (5) a continuing application of a U.S. application that satisfies one of (1) to (4) above, or (6) a U.S. application that claims domestic benefit to a U.S. provisional application which forms the basis for the priority claim in the corresponding PCT application.

The corresponding PCT application number(s) is/are: PCT/GB2010/000156

The international filing date of the corresponding PCT application(s) is/are: January 29, 2010

I. List of Required Documents:

a. **A copy of the latest international work product (WO/ISA, WO/IPEA, or IPER) in the above–identified corresponding PCT application(s)**

☐ Is attached

☒ Is not attached because the document is already in the U.S. application.

b. **A copy of all claims which were indicated as having novelty, inventive step and industrial applicability in the above-identified corresponding PCT application(s).**

☒ Is attached.

☐ Is not attached because the document is already in the U.S. application.

c. **English translations of the documents in a. and b. above are attached (if the documents are not in the English language). A statement that the English translation is accurate is attached for the document in b. above.**

This collection of information is required by 35 U.S.C. 119, 37 CFR 1.55, and 37 CFR 1.102(d). The information is required to obtain or retain a benefit by the public, which is to file (and by the USPTO to process) an application. Confidentiality is governed by 35 U.S.C. 122 and 37 CFR 1.11 and 1.14. This collection is estimated to take 2 hours to complete, including gathering, preparing, and submitting the completed application form to the USPTO. Time will vary depending upon the individual case. Any comments on the amount of time you require to complete this form and/or suggestions for reducing this burden should be sent to the Chief Information Officer, U.S. Patent and Trademark Office, U.S. Department of Commerce, P.O. Box 1450, Alexandria, VA 22313-1450. DO NOT SEND FEES OR COMPLETED FORMS TO THIS ADDRESS.

Approved for use through 01/31/2012. OMB 0651-0058
U.S.Patent and Trademark Office; U.S. DEPARTMENT OF COMMERCE

Under the Paperwork Reduction Act of 1995, no persons are required to respond to a collection of information unless it displays a valid OMB control number.

REQUEST FOR PARTICIPATION IN THE PCT-PPH PILOT PROGRAM BETWEEN THE EPO AND THE USPTO

(continued)

Application No.:	13/146,836
First Named Inventor:	William Campbell Crawford

d. **(1) An information disclosure statement listing the documents cited in the international work products (ISR, WO/ISA, WO/IPEA, IPER) of the corresponding PCT application.**

☐ Is attached

☒ Has already been filed in the above-identified U.S. application on August 2, 2011

(2) Copies of all documents (except) for U.S. patents or U.S. patent application publications)

☐ Are attached.

☒ Have already been filed in the above-identified U.S. application on August 2, 2011

II. Claims Correspondence Table:

Claims in US Application	Patentable Claims in the corresponding PCT Application	Explanation regarding the correspondence
1	1	Same
2	2	Same
3	3	Amended to depend on claim 1
4	4	Canceled
5	5	Amended to depend on claim 1
6	6	Amended to depend on claim 1
7	7	Same
8	8	Amended to depend on claim 1
9	9	Amended to depend on claim 1
10 - 21	10 -15	Canceled

III. All the claims in the US application sufficiently correspond to the patentable claims in the corresponding PCT application.

Signature /John E. Nemazi/	Date October 18, 2011
Name (Print/Typed) John E. Nemazi	Registration Number 30876

Privacy Act Statement

The **Privacy Act of 1974 (P.L. 93-579)** requires that you be given certain information in connection with your submission of the attached form related to a patent application or patent. Accordingly, pursuant to the requirements of the Act, please be advised that: (1) the general authority for the collection of this information is 35 U.S.C. 2(b)(2); (2) furnishing of the information solicited is voluntary; and (3) the principal purpose for which the information is used by the U.S. Patent and Trademark Office is to process and/or examine your submission related to a patent application or patent. If you do not furnish the requested information, the U.S. Patent and Trademark Office may not be able to process and/or examine your submission, which may result in termination of proceedings or abandonment of the application or expiration of the patent.

The information provided by you in this form will be subject to the following routine uses:

1. The information on this form will be treated confidentially to the extent allowed under the Freedom of Information Act (5 U.S.C. 552) and the Privacy Act (5 U.S.C 552a). Records from this system of records may be disclosed to the Department of Justice to determine whether disclosure of these records is required by the Freedom of Information Act.
2. A record from this system of records may be disclosed, as a routine use, in the course of presenting evidence to a court, magistrate, or administrative tribunal, including disclosures to opposing counsel in the course of settlement negotiations.
3. A record in this system of records may be disclosed, as a routine use, to a Member of Congress submitting a request involving an individual, to whom the record pertains, when the individual has requested assistance from the Member with respect to the subject matter of the record.
4. A record in this system of records may be disclosed, as a routine use, to a contractor of the Agency having need for the information in order to perform a contract. Recipients of information shall be required to comply with the requirements of the Privacy Act of 1974, as amended, pursuant to 5 U.S.C. 552a(m).
5. A record related to an International Application filed under the Patent Cooperation Treaty in this system of records may be disclosed, as a routine use, to the International Bureau of the World Intellectual Property Organization, pursuant to the Patent Cooperation Treaty.
6. A record in this system of records may be disclosed, as a routine use, to another federal agency for purposes of National Security review (35 U.S.C. 181) and for review pursuant to the Atomic Energy Act (42 U.S.C. 218(c)).
7. A record from this system of records may be disclosed, as a routine use, to the Administrator, General Services, or his/her designee, during an inspection of records conducted by GSA as part of that agency's responsibility to recommend improvements in records management practices and programs, under authority of 44 U.S.C. 2904 and 2906. Such disclosure shall be made in accordance with the GSA regulations governing inspection of records for this purpose, and any other relevant (*i.e.*, GSA or Commerce) directive. Such disclosure shall not be used to make determinations about individuals.
8. A record from this system of records may be disclosed, as a routine use, to the public after either publication of the application pursuant to 35 U.S.C. 122(b) or issuance of a patent pursuant to 35 U.S.C. 151. Further, a record may be disclosed, subject to the limitations of 37 CFR 1.14, as a routine use, to the public if the record was filed in an application which became abandoned or in which the proceedings were terminated and which application is referenced by either a published application, an application open to public inspection or an issued patent.
9. A record from this system of records may be disclosed, as a routine use, to a Federal, State, or local law enforcement agency, if the USPTO becomes aware of a violation or potential violation of law or regulation.

UNITED STATES PATENT AND TRADEMARK OFFICE

UNITED STATES DEPARTMENT OF COMMERCE
United States Patent and Trademark Office
Address: COMMISSIONER FOR PATENTS
P.O. Box 1450
Alexandria, Virginia 22313-1450
www.uspto.gov

APPLICATION NO.	FILING DATE	FIRST NAMED INVENTOR	ATTORNEY DOCKET NO.	CONFIRMATION NO.
13/146,836	09/06/2011	William Campbell Crawford	KIST0146PUSA	7483

22045 7590 11/15/2011
BROOKS KUSHMAN P.C.
1000 TOWN CENTER
TWENTY-SECOND FLOOR
SOUTHFIELD, MI 48075

EXAMINER
JUSKA, CHERYL ANN

ART UNIT	PAPER NUMBER
1798	

MAIL DATE	DELIVERY MODE
11/15/2011	PAPER

Please find below and/or attached an Office communication concerning this application or proceeding.

The time period for reply, if any, is set in the attached communication.

UNITED STATES PATENT AND TRADEMARK OFFICE

Commissioner for Patents
United States Patent and Trademark Office
P.O. Box 1450
Alexandria, VA 22313-1450
www.uspto.gov

BC

November 15, 2011

In re application of	:	DECISION ON REQUEST TO
William C. Crawford et al.	:	PARTICIPATE IN PATENT
Serial No. 13/146,836	:	PROSECUTION HIGHWAY
Filed: July 28, 2011	:	PROGRAM AND
Attorney Docket No: KIST0146PUSA	:	PETITION TO MAKE SPECIAL
	:	UNDER 37 CFR 1.102(a)

This is a decision on the request to participate in the PCT Patent Prosecution Highway (PCT-PPH) pilot program and the petition under 37 CFR 1.102(a), filed October 19, 2011, to make the above-identified application special.

The request and petition are **GRANTED**.

A grantable request to participate in the PCT-PPH pilot program and petition to make special require:

(1) The U.S. application must disclose an eligible relationship to one or more PCT applications where the ISA or IPEA are the APO, IPA, JPO, KIPO, NBPR, NPI, EPO, Rospatent, IPOS, SPTO, PRV, UK IPO or USPTO;

(2) At least one claim in the PCT application has novelty, inventive step, and industrial applicability and must be free of any observations in Box VIII in the latest work product in the international stage or applicant must identify and explain why the claim(s) is/are not subject to the observation in Box VIII;

(3) Applicant must submit a copy of the claim(s) from the PCT application(s) that have novelty, inventive step, and industrial applicability along with an English translation thereof and a statement that the English translation is accurate, if the claims are not in the English language;

(4) All the claims in the U.S. application must sufficiently correspond or be amended to sufficiently correspond to the claim(s) that have novelty, inventive step, and industrial applicability in the PCT application(s);

(5) Examination of the U.S. application has not begun;

(6) Applicant must submit a copy of the latest international work product from the PCT application indicating that the claim(s) have novelty, inventive step, and industrial applicability along with an English translation thereof if the latest international work

product is not in the English language; and

(7) Applicant must submit an IDS listing the documents cited by the PCT examiner in the international work product along with copies of documents except U.S. patents or U.S. patent application publications.

The request to participate in the PPH program and petition comply with the above requirements. Accordingly, the above-identified application has been accorded "special" status.

The application is being forwarded to the examiner for action on the merits commensurate with this decision.

Any inquiry regarding this decision should be directed to Blaine Copenheaver, Quality Assurance Specialist, at (571) 272-1156.

All other inquiries concerning the examination or status of the application is accessible in the PAIR system at http://www.uspto.gov/ebc/index.html.

/Blaine Copenheaver/

Blaine Copenheaver
Quality Assurance Specialist
Technology Center 1700

PTO/SB/20PCT-KR (06-10)
Approved for use through 01/31/2012. OMB 0651-0058
U.S. Patent and Trademark Office; U. S. DEPARTMENT OF COMMERCE
Under the Paperwork Reduction Act of 1995, no persons are required to respond to a collection of information unless it displays a valid OMB control number.

REQUEST FOR PARTICIPATION IN THE PATENT COOPERATION TREATY - PATENT PROSECUTION HIGHWAY (PCT-PPH) PILOT PROGRAM BETWEEN THE KOREAN INTELLECTUAL PROPERTY OFFICE (KIPO) AND THE USPTO

Application No:	13146896	Filing date:	October 17, 2011
First Named Inventor:	THOMPSON, TODD		
Title of the Invention:	Multiplexed, Multi-Electrode Neurostimulation Devices with Integrated Circuits Having Integrated Electroc		

THIS REQUEST FOR PARTICIPATION IN THE PCT-PPH PILOT PROGRAM ALONG WITH THE REQUIRED DOCUMENTS MUST BE SUBMITTED VIA EFS-WEB. INFORMATION REGARDING EFS-WEB IS AVAILABLE AT HTTP://WWW.USPTO.GOV/EBC/EFS_HELP.HTML

APPLICANT HEREBY REQUESTS PARTICIPATION IN THE PCT-PPH PROGRAM AND PETITIONS TO MAKE THE ABOVE-IDENTIFIED APPLICATION SPECIAL UNDER THE PCT-PPH PROGRAM.

The above-identified application is (1) a national stage entry of the corresponding PCT application, or (2) a national stage entry of another PCT application which claims priority to the corresponding PCT application, or (3) a national application that claims domestic/ foreign priority to the corresponding PCT application, or (4) a national application which forms the basis for the priority claim in the corresponding PCT application, or (5) a continuing application of a U.S. application that satisfies one of (1) to (4) above, or (6) a U.S. application that claims domestic benefit to a U.S. provisional application which forms the basis for the priority claim in the corresponding PCT application.

The corresponding PCT application number(s) is/are: PCT/US2010/023687

The international date of the corresponding PCT application(s) is/are: February 9, 2010

I. List of Required Documents:

a. **A copy of the latest international work product (WO/ISA, WO/IPEA, or IPER) in the above–identified corresponding PCT application(s)**

- [x] Is attached.
- [ ] Is not attached because the document is already in the U.S. application.

b. **A copy of all claims which were indicated as having novelty, inventive step and industrial applicability in the above-identified corresponding PCT application(s).**

- [ ] Is attached.
- [x] Is not attached because the document is already in the U.S. application.

c. **English translations of the documents in a. and b. above are attached (if the documents are not in the English language). A statement that the English translation is accurate is attached for the document in b. above.**

This collection of information is required by 35 U.S.C. 119, 37 CFR 1.55, and 37 CFR 1.102(d). The information is required to obtain or retain a benefit by the public, which is to file (and by the USPTO to process) an application. Confidentiality is governed by 35 U.S.C. 122 and 37 CFR 1.11 and 1.14. This collection is estimated to take 2 hours to complete, including gathering, preparing, and submitting the completed application form to the USPTO. Time will vary depending upon the individual case. Any comments on the amount of time you require to complete this form and/or suggestions for reducing this burden should be sent to the Chief Information Officer, U.S. Patent and Trademark Office, U.S. Department of Commerce, P.O. Box 1450, Alexandria, VA 22313-1450. DO NOT SEND FEES OR COMPLETED FORMS TO THIS ADDRESS.

Approved for use through 01/31/2012. OMB 0651-0058
U.S.Patent and Trademark Office; U.S. DEPARTMENT OF COMMERCE
Under the Paperwork Reduction Act of 1995, no persons are required to respond to a collection of information unless it displays a valid OMB control number.

REQUEST FOR PARTICIPATION IN THE PCT-PPH PILOT PROGRAM BETWEEN THE KIPO AND THE USPTO

(continued)

Application No.:	13146896
First Named Inventor:	THOMPSON, TODD

d. **(1) An information disclosure statement listing the documents cited in the international work products (ISR, WO/ISA, WO/IPEA, IPER) of the corresponding PCT application.**

☒ Is attached

☐ Has already been filed in the above-identified U.S. application on _____

(2) Copies of all documents (except) for U.S. patents or U.S. patent application publications)

☒ Are attached.

Have already been filed in the above-identified U.S. application on _____

II. Claims Correspondence Table:

Claims in US Application	Patentable Claims in the corresponding PCT Application	Explanation regarding the correspondence
1-2	1-2	Claims are identical
3	3	Claim is amended to clarify wording
4	4	Claim is canceled
5-7	5-7	Claims are identical
8-9	8-9	Claims are amended to correct clerical error
10-17	10-17	Claims are identical
18	18	Claim is amended to correct typographical error and address
		Box 8 observation
19-24	19-24	Claims are identical
25	25	Claim is amended to incorporate elements of claims 26 & 27
26-27	26-27	Claims are canceled
28-29	28-29	Claims are identical

III. All the claims in the US application sufficiently correspond to the patentable claims in the corresponding PCT application.

Signature	/Bret E. Field, Reg. No. 37,620/	Date	2011-10-18
Name (Print/Typed)	Bret E. Field	Registration Number	37,620

Privacy Act Statement

The **Privacy Act of 1974 (P.L. 93-579)** requires that you be given certain information in connection with your submission of the attached form related to a patent application or patent. Accordingly, pursuant to the requirements of the Act, please be advised that: (1) the general authority for the collection of this information is 35 U.S.C. 2(b)(2); (2) furnishing of the information solicited is voluntary; and (3) the principal purpose for which the information is used by the U.S. Patent and Trademark Office is to process and/or examine your submission related to a patent application or patent. If you do not furnish the requested information, the U.S. Patent and Trademark Office may not be able to process and/or examine your submission, which may result in termination of proceedings or abandonment of the application or expiration of the patent.

The information provided by you in this form will be subject to the following routine uses:

1. The information on this form will be treated confidentially to the extent allowed under the Freedom of Information Act (5 U.S.C. 552) and the Privacy Act (5 U.S.C 552a). Records from this system of records may be disclosed to the Department of Justice to determine whether disclosure of these records is required by the Freedom of Information Act.
2. A record from this system of records may be disclosed, as a routine use, in the course of presenting evidence to a court, magistrate, or administrative tribunal, including disclosures to opposing counsel in the course of settlement negotiations.
3. A record in this system of records may be disclosed, as a routine use, to a Member of Congress submitting a request involving an individual, to whom the record pertains, when the individual has requested assistance from the Member with respect to the subject matter of the record.
4. A record in this system of records may be disclosed, as a routine use, to a contractor of the Agency having need for the information in order to perform a contract. Recipients of information shall be required to comply with the requirements of the Privacy Act of 1974, as amended, pursuant to 5 U.S.C. 552a(m).
5. A record related to an International Application filed under the Patent Cooperation Treaty in this system of records may be disclosed, as a routine use, to the International Bureau of the World Intellectual Property Organization, pursuant to the Patent Cooperation Treaty.
6. A record in this system of records may be disclosed, as a routine use, to another federal agency for purposes of National Security review (35 U.S.C. 181) and for review pursuant to the Atomic Energy Act (42 U.S.C. 218(c)).
7. A record from this system of records may be disclosed, as a routine use, to the Administrator, General Services, or his/her designee, during an inspection of records conducted by GSA as part of that agency's responsibility to recommend improvements in records management practices and programs, under authority of 44 U.S.C. 2904 and 2906. Such disclosure shall be made in accordance with the GSA regulations governing inspection of records for this purpose, and any other relevant (*i.e.*, GSA or Commerce) directive. Such disclosure shall not be used to make determinations about individuals.
8. A record from this system of records may be disclosed, as a routine use, to the public after either publication of the application pursuant to 35 U.S.C. 122(b) or issuance of a patent pursuant to 35 U.S.C. 151. Further, a record may be disclosed, subject to the limitations of 37 CFR 1.14, as a routine use, to the public if the record was filed in an application which became abandoned or in which the proceedings were terminated and which application is referenced by either a published application, an application open to public inspection or an issued patent.
9. A record from this system of records may be disclosed, as a routine use, to a Federal, State, or local law enforcement agency, if the USPTO becomes aware of a violation or potential violation of law or regulation.

UNITED STATES PATENT AND TRADEMARK OFFICE

Commissioner for Patents
United States Patent and Trademark Office
P.O. Box 1450
Alexandria, VA 22313-1450
www.uspto.gov

Proteus Biomedical, Inc.
Bozicevic, Field & Francis LLP
1900 University Avenue, Suite 200
East Palo Alto CA 94303

MAILED

FEB 24 2012

OFFICE OF PETITIONS

In re Application of
THOMPSON, Todd et al.
Application No.: 13/146,896
Filed: October 17, 2011
Attorney Docket No.: PRTS-140(PRO-130)
For: MULTIPLEXED, MULTI-ELECTRODE NEUROSTIMULATION DEVICES WITH ...

: DECISION ON REQUEST TO
: PARTICIPATE IN THE PATENT
: PROSECUTION HIGHWAY
: PROGRAM AND PETITION
: TO MAKE SPECIAL UNDER
: 37 CFR 1.102(a)

This is a decision on the request to participate in the PCT Patent Prosecution Highway (PCT-PPH) pilot program and the petition under 37 CFR 1.102(a), filed on October 18, 2011, to make the above-identified application special.

The request and petition are **DISMISSED**.

Discussion

A grantable request to participate in the PCT-PPH pilot program and petition to make special require:

(1) The U.S. application must have an eligible relationship to one or more PCT applications where the ISA or IPEA are the JPO, EPO, KIPO, IPAU, Russia, Spain, Finland, Austria, or USPTO;

(2) At least one claim in the PCT application has novelty, inventive step, and industrial applicability and must be free of any observations in Box VIII in the latest work product in the international stage or applicant must identify and explain why the claim(s) is/are not subject to the observation in Box VIII;

(3) Applicant must submit a copy of the claim(s) from the PCT application(s) that have novelty, inventive step, and industrial applicability along with an English translation thereof and a statement that the English translation is accurate, if the claims are not in the English language;

(4) All the claims in the U.S. application must sufficiently correspond or be amended to sufficiently correspond to the claim(s) that have novelty, inventive step, and industrial applicability in the PCT application(s);

(5) Examination of the U.S. application has not begun;

(6) Applicant must submit a copy of the latest international work product from the PCT application indicating that the claim(s) have novelty, inventive step, and industrial applicability along with an English translation thereof.

(7) Applicant must submit an IDS listing the documents cited by the PCT examiner in the international work product along with copies of documents except U.S. patents or U.S. patent application publications.

(8) Applicant is required to submit a claims correspondence table in English which indicates how all the claims in the U.S. application correspond to the claims indicated as having novelty, inventive step and industrial applicability in the latest international work product.

Requirements (1), (3-6), and (7-8) above are considered to have been met. However, the request to participate in the PPH pilot program and petition fail to meet requirements (2).

Regarding the requirement of condition (2), applicant has failed to identify and explain why the claims are not subject to the observation in Box VIII of the Written Opinion (PCT/ISA/237).

Applicant is given **ONE** opportunity within a time period of **ONE MONTH or THIRTY DAYS**, whichever is longer, from the mailing date of this decision to correct the deficiencies. **NO EXTENSION OF TIME UNDER 37 CFR 1.136 IS PERMITTED.** If the deficiencies are not corrected with the time period given, the application will await action in its regular turn.

Response must be filed via the Electronic Filing System (EFS) using the document description: Petition to make special under PCT – Patent Pros Hwy. Any preliminary amendments and IDS submitted with the PPH documents must be separately indexed as a preliminary amendment and IDS, respectively.

Telephone inquiries concerning this decision should be directed to JoAnne Burke at 571-272-4584.

All other inquiries concerning the examination or status of the application is accessible in the PAIR system at http://www.uspto.gov/ebc/index.html.

David Bucci
Petitions Examiner
Office of Petitions

PTO/SB/20PCT-EP (01-10)
Approved for use through 01/31/2012. OMB 0651-0058
U.S. Patent and Trademark Office; U. S. DEPARTMENT OF COMMERCE
Under the Paperwork Reduction Act of 1995, no persons are required to respond to a collection of information unless it displays a valid OMB control number.

REQUEST FOR PARTICIPATION IN THE PATENT COOPERATION TREATY - PATENT PROSECUTION HIGHWAY (PCT-PPH) PILOT PROGRAM BETWEEN THE EUROPEAN PATENT OFFICE (EPO) AND THE USPTO

Application No:	13/147,002	Filing date:	July 29, 2011
First Named Inventor:	Johannes Germishuizen		
Title of the Invention:	END TURN ARRANGEMENT		

THIS REQUEST FOR PARTICIPATION IN THE PCT-PPH PILOT PROGRAM ALONG WITH THE REQUIRED DOCUMENTS MUST BE SUBMITTED VIA EFS-WEB. INFORMATION REGARDING EFS-WEB IS AVAILABLE AT HTTP://WWW.USPTO.GOV/EBC/EFS_HELP.HTML

APPLICANT HEREBY REQUESTS PARTICIPATION IN THE PCT-PPH PROGRAM AND PETITIONS TO MAKE THE ABOVE-IDENTIFIED APPLICATION SPECIAL UNDER THE PCT-PPH PROGRAM.

The above-identified application is (1) a national stage entry of the corresponding PCT application, or (2) a national stage entry of another PCT application which claims priority to the corresponding PCT application, or (3) a national application that claims domestic/ foreign priority to the corresponding PCT application, or (4) a national application which forms the basis for the priority claim in the corresponding PCT application.

The corresponding PCT application number(s) is/are: PCT/EP2010/056698

The international date of the corresponding PCT application(s) is/are: May 17, 2010

I. List of Required Documents:

a. **A copy of the latest international work product (WO/ISA, WO/IPEA, or IPER) in the above–identified corresponding PCT application(s)**

☑ Is attached

☐ Is not attached because the document is already in the U.S. application.

b. **A copy of all claims which were indicated as having novelty, inventive step and industrial applicability in the above-identified corresponding PCT application(s).**

☑ Is attached.

☐ Is not attached because the document is already in the U.S. application.

c. **English translations of the documents in a. and b. above are attached (if the documents are not in the English language). A statement that the English translation is accurate is attached for the document in b. above.**

d. **(1) An information disclosure statement listing the documents cited in the international work products (ISR, WO/ISA, WO/IPEA, IPER) of the corresponding PCT application.**

☐ Is attached

☑ Has already been filed in the above-identified U.S. application on August 17, 2011

(2) Copies of all documents (except) for U.S. patents or U.S. patent application publications)

☐ Are attached.

☑ Have already been filed in the above-identified U.S. application on August 17, 2011

This collection of information is required by 35 U.S.C. 119, 37 CFR 1.55, and 37 CFR 1.102(d). The information is required to obtain or retain a benefit by the public, which is to file (and by the USPTO to process) an application. Confidentiality is governed by 35 U.S.C. 122 and 37 CFR 1.11 and 1.14. This collection is estimated to take 2 hours to complete, including gathering, preparing, and submitting the completed application form to the USPTO. Time will vary depending upon the individual case. Any comments on the amount of time you require to complete this form and/or suggestions for reducing this burden should be sent to the Chief Information Officer, U.S. Patent and Trademark Office, U.S. Department of Commerce, P.O. Box 1450, Alexandria, VA 22313-1450. DO NOT SEND FEES OR COMPLETED FORMS TO THIS ADDRESS.

Approved for use through 01/31/2012. OMB 0651-0058
U.S.Patent and Trademark Office; U.S. DEPARTMENT OF COMMERCE
Under the Paperwork Reduction Act of 1995, no persons are required to respond to a collection of information unless it displays a valid OMB control number.

REQUEST FOR PARTICIPATION IN THE PCT-PPH PILOT PROGRAM BETWEEN THE EPO AND THE USPTO

(continued)

Application No.:	13/147,002
First Named Inventor:	Johannes Germishuizen

II. Claims Correspondence Table:

Claims in US Application	Patentable Claims in the corresponding PCT Application	Explanation regarding the correspondence
10	1,2	SEE CONTINUATION SHEET
11	3	US claim 11 substantially corresponds in scope to PCT claim 3 except for the deletion of reference numbers
12	4	US claim 12 substantially corresponds in scope to PCT claim 4 except for the deletion of reference numbers
13	5	US claim 13 substantially corresponds in scope to PCT claim 5 except for the deletion of reference numbers
14	6	US claim 14 substantially corresponds in scope to PCT claim 6 except for the deletion of reference numbers
15	7,2	SEE CONTINUATION SHEET
16	7,3	SEE CONTINUATION SHEET
17	7,4	SEE CONTINUATION SHEET
18	7,5	SEE CONTINUATION SHEET
19	7,6	SEE CONTINUATION SHEET
20	8	SEE CONTINUATION SHEET
21	8	SEE CONTINUATION SHEET
22	9,8	SEE CONTINUATION SHEET

III. All the claims in the US application sufficiently correspond to the patentable claims in the corresponding PCT application.

IV. Payment of Fees:

The petition fee under 37 CFR 1.17(h) as required by 37 CFR 1.102(d) must be paid via EFS-Web (using credit card, authorization to charge a deposit account, or electronic funds transfer).

Signature	Date 10-26-2011
Name (Print/Typed) Henry M. Feiereisen	Registration Number 31,084

CONTINUATION SHEET

US claim 10 substantially corresponds in scope to PCT claim 1, including the subject matter of claim 2 and excluding reference numbers.

US claim 15 substantially corresponds in scope to PCT claim 7, including the subject matter of claim 2 and excluding reference numbers.

US claim 16 substantially corresponds in scope to PCT claim 7, including the subject matter of claim 3 and excluding reference numbers.

US claim 17 substantially corresponds in scope to PCT claim 7, including the subject matter of claim 4 and excluding reference numbers.

US claim 18 substantially corresponds in scope to PCT claim 7, including the subject matter of claim 5 and excluding reference numbers.

US claim 19 substantially corresponds in scope to PCT claim 7, including the subject matter of claim 6 and excluding reference numbers.

US claim 20 substantially corresponds in scope to PCT claim 8, including the subject matter of claim 7 and excluding reference numbers and recitation of a particular preferred example.

US claim 21 sets forth the recitation of a particular preferred example, as set forth in PCT claim 8.

US claim 22 substantially corresponds in scope to PCT claim 9, including the subject matter of claim 8.

UNITED STATES PATENT AND TRADEMARK OFFICE

Commissioner for Patents
United States Patent and Trademark Office
P.O. Box 1450
Alexandria, VA 22313-1450

MAILED

AUG 31 2011

PCT LEGAL ADMINISTRATION

LADAS & PARRY LLP
26 WEST 61ST STREET
NEW YORK NY 10023

In re Application of: REDDY, Vanga, et al.
U.S. Application No.: 13/147,004
PCT No: PCT/IN2009/000685
International Filing Date: 27 November 2009
Priority Date: 27 November 2008
Attorney Docket No.: U 018428-6
For: A METHOD OF EXPRESSING FOREIGN PROTEIN IN PLASTIDS

DECISION ON PETITION UNDER 37 CFR 1.137(b)

This decision is issued in response to the petition for revival under 37 CFR 1.137(b) filed on 29 July 2011. Applicants have paid the required petition fee.

BACKGROUND

On 27 November 2009, applicants filed international application PCT/IN2009/000685. The application claimed a priority date of 27 November 2008, and it designated the United States. On 03 June 2010, the International Bureau (IB) communicated a copy of the international application to the United States Patent and Trademark Office (USPTO). The deadline for payment of the basic national fee was thirty months from the priority date, i.e., 27 May 2011.

Applicants did not submit a request for entry into the national stage in the United States accompanied by payment of the basic national fee prior to the expiration of the thirty month deadline. Accordingly, international application PCT/IN2009/000685 became abandoned with respect to the United States at midnight on 27 May 2011.

On 29 July 2011, applicants filed the petition for revival under 37 CFR 1.137(b) considered herein, accompanied by, among other materials, a request for entry into the national stage in the United States and payment of the basic national fee.

DISCUSSION

37 CFR 1.137(b) permits the filing of a petition to revive an abandoned application where the abandonment resulted from an unintentional delay. A grantable petition under this section must include: (1) the required reply, unless previously filed; (2) the petition fee required by law; (3) a statement that the "entire delay in filing the required reply from the due date for the reply until the filing of a grantable petition pursuant to this paragraph was unintentional;" and (4) any

terminal disclaimer and fee required pursuant to 37 CFR 1.137(c). It is noted that item (4) does not apply to the present application.

With respect to item (1), the "required reply" here is a request for entry into the national stage in the United States accompanied by payment of the basic national. The present petition was accompanied by such materials. Accordingly, item (1) of a grantable petition is satisfied.

With respect to item (2), applicant has paid the required petition fee. Item (2) is therefore satisfied.

With respect to item (3), the petition document filed by applicants includes a statement that "[t[he entire delay in filing the required reply from the due date for the required reply until the filing of a grantable petition under 37 CFR 1.137(b) was unintentional." However, the petition document contains a signature line identified as "Signature of person making statement that abandonment was due to an unintentional delay," and this signature line was left blank and unexecuted. The statement of unintentional delay contained in the petition document is therefore considered unexecuted and cannot be accepted as satisfying element (3) of a grantable petition.

In view of the above, the present record does not include an acceptable statement that the "the entire delay in filing the required reply from the due date for the required reply until the filing of a grantable petition under 37 CFR 1.137(b) was unintentional." Item (3) of a grantable petition is therefore not satisfied.

CONCLUSION

Applicant's petition for revival under 37 CFR 1.137(b) is **DISMISSED** without prejudice.

If reconsideration on the merits of this petition is desired, a proper response must be filed within **TWO (2) MONTHS** from the mail date of this decision. Any request for reconsideration should be entitled "Renewed Petition Under 37 CFR 1.137(b)" and it must include the materials required to satisfy item (3) of a grantable petition, as discussed above. No additional petition fee is required. Extensions of time may be obtained under 37 CFR 1.136(a).

Any further correspondence with respect to this matter may be filed electronically via EFS-Web selecting the document description "Petition for review and processing by the PCT Legal Office" or by mail addressed to Mail Stop PCT, Commissioner for Patents, Office of PCT Legal Administration, P.O. Box 1450, Alexandria, Virginia 22313-1450, with the contents of the letter marked to the attention of the Office of PCT Legal Administration.

/RichardMRoss/

Richard M. Ross
Attorney Advisor
Office of PCT Legal Administration
Telephone: (571) 272-3296

MAILED

NOV 17 2011

PCT LEGAL ADMINISTRATION

UNITED STATES PATENT AND TRADEMARK OFFICE

Commissioner for Patents
United States Patent and Trademark Office
P.O. Box 1450
Alexandria, VA 22313-1450

LADAS & PARRY LLP
26 WEST 61ST STREET
NEW YORK NY 10023

In re Application of: REDDY, Vanga, et al.	:	
U.S. Application No.: 13/147,004	:	DECISION ON RENEWED
PCT No: PCT/IN2009/000685	:	PETITION UNDER
International Filing Date: 27 November 2009	:	37 CFR 1.137(b)
Priority Date: 27 November 2008	:	
Attorney Docket No.: U 018428-6	:	
For: A METHOD OF EXPRESSING	:	
FOREIGN PROTEIN IN PLASTIDS	:	

This decision is issued in response to the "Renewed Petition Under 37 CFR 1.137(b)" filed on 31 October 2011. No additional petition fee is required.

BACKGROUND

The procedural background for the present application was set forth in the decision mailed on 31 August 2011. The decision dismissed without prejudice applicants' petition under 37 CFR 1.137(b) for revival of international application PCT/IN2009/000685, finding that applicants had not satisfied all the requirements of a grantable petition. Specifically, the decision indicated that applicants had not provided an acceptable statement that the "entire delay in filing the required reply from the due date for the reply until the filing of a grantable petition pursuant to this paragraph was unintentional."

On 31 October 2011, applicants filed the renewed petition under 37 CFR 1.137(b) considered herein.

DISCUSSION

The renewed petition includes a revised version of the petition for revival in which the statement that "[t[he entire delay in filing the required reply from the due date for the required reply until the filing of a grantable petition under 37 CFR 1.137(b) was unintentional" has been expressly executed by the agent filing petition. This statement satisfies the requirement of 37 CFR 1.137(b)(3).

In view of the above, applicants have now satisfied the final outstanding element of a grantable petition for revival under 37 CFR 1.137(b). The petition is therefore appropriately granted.

CONCLUSION

The petition for revival of international application PCT/IN2009/000685 under 37 CFR 1.137(b) is **GRANTED.**

The application is being referred to the National Stage Processing Branch of the Office of PCT Operations for further processing.

/RichardMRoss/

Richard M. Ross
Attorney Advisor
Office of PCT Legal Administration
Telephone: (571) 272-3296

UNITED STATES PATENT AND TRADEMARK OFFICE

Commissioner for Patents
United States Patent and Trademark Office
P.O. Box 1450
Alexandria, VA 22313-1450
www.uspto.gov

MAILED
NOV 02 2011
PCT LEGAL ADMINISTRATION

JAMES C. LYDON
100 DAINGERFIELD ROAD
SUITE 100
ALEXANDRIA, VA 22314

In re Application of:	:	
VALLITTU et al.	:	DECISION
PCT Application No.: PCT/FI2010/050052	:	
US Application No.: 13/147,085	:	UNDER
Int. Filing Date: 29 January 2010	:	
Priority Date claimed: 30 January 2009	:	37 CFR 1.182
Atty Docket No.: TUR-224	:	
For: A COMPOSITE AND ITS USE	:	

This decision is in response to applicants' "PETITION UNDER 37 CFR 1.182" received on 14 October 2011.

BACKGROUND

On 29 July 2011, applicants filed papers to initiate a U.S. national stage application. This submission included, among other materials, a preliminary amendment and payment of the basic national fee. The materials filed by applicants, including the Transmittal Letter (PTO-1390), identified the international application number as PCT/FI10/050052. However, the Electronic Filing Receipt indicated the international application number as **PCT/FI2005/050052**.

Based on applicants' error and USPTO processing procedures, the application file was initiated in the USPTO PALM system as the U.S. national stage of PCT/FI2005/050052.

DISCUSSION

In order to correct applicants' error, a grantable petition under 37 CFR 1.182 is required to correct the record with regard to the inconsistent international application numbers provided by applicants. The petition must include the following: (1) payment of the $400 petition fee; (2) a statement confirming the correct international application number; and (3) an indication that the correct international application number was included somewhere in the national stage application papers filed prior to the expiration of thirty months from the priority date.

With regard to item (1), the fee has been paid.

With regard to items (2) and ((3), applicants have provided the correct international application number in the transmittal letter within the expiration of thirty months from the priority date.

CONCLUSION

For this reason, applicant's petition under 37 CFR 1.182 is **GRANTED**.

This application is being referred to the National Stage Processing (DO/EO/US) for further processing in accordance with this decision.

/Boris Milef/

Shian Luong
PCT Special Programs Examiner
Office of PCT Legal Administration
Telephone: (571) 272-4557

Boris Milef
Senior PCT Legal Examiner
Office of PCT Legal Administration

PTO/SB/20PCT-EP (05-10)
Approved for use through 01/31/2012. OMB 0651-0058
U.S. Patent and Trademark Office; U. S. DEPARTMENT OF COMMERCE
Under the Paperwork Reduction Act of 1995, no persons are required to respond to a collection of information unless it displays a valid OMB control number.

REQUEST FOR PARTICIPATION IN THE PATENT COOPERATION TREATY - PATENT PROSECUTION HIGHWAY (PCT-PPH) PILOT PROGRAM BETWEEN THE EUROPEAN PATENT OFFICE (EPO) AND THE USPTO

Application No:	13/147,163	Filing date:	July 29, 2011
First Named Inventor:	Sato et al.		
Title of the Invention:	CULTURE MEDIUM FOR EPITHELIAL STEM CELLS AND ORGANOIDS COMPRISING SAID STEM CELLS		

THIS REQUEST FOR PARTICIPATION IN THE PCT-PPH PILOT PROGRAM ALONG WITH THE REQUIRED DOCUMENTS MUST BE SUBMITTED VIA EFS-WEB. INFORMATION REGARDING EFS-WEB IS AVAILABLE AT HTTP://WWW.USPTO.GOV/EBC/EFS_HELP.HTML

APPLICANT HEREBY REQUESTS PARTICIPATION IN THE PCT-PPH PROGRAM AND PETITIONS TO MAKE THE ABOVE-IDENTIFIED APPLICATION SPECIAL UNDER THE PCT-PPH PROGRAM.

The above-identified application is (1) a national stage entry of the corresponding PCT application, or (2) a national stage entry of another PCT application which claims priority to the corresponding PCT application, or (3) a national application that claims domestic/ foreign priority to the corresponding PCT application, or (4) a national application which forms the basis for the priority claim in the corresponding PCT application, or (5) a continuing application of a U.S. application that satisfies one of (1) to (4) above, or (6) a U.S. application that claims domestic benefit to a U.S. provisional application which forms the basis for the priority claim in the corresponding PCT application.

The corresponding PCT application number(s) is/are: PCT/NL2010/000017

The international filing date of the corresponding PCT application(s) is/are: Feb. 3, 2010

I. List of Required Documents:

a. **A copy of the latest international work product (WO/ISA, WO/IPEA, or IPER) in the above–identified corresponding PCT application(s)**

- [x] Is attached
- [ ] Is not attached because the document is already in the U.S. application.

b. **A copy of all claims which were indicated as having novelty, inventive step and industrial applicability in the above-identified corresponding PCT application(s).**

- [x] Is attached.
- [ ] Is not attached because the document is already in the U.S. application.

c. **English translations of the documents in a. and b. above are attached (if the documents are not in the English language). A statement that the English translation is accurate is attached for the document in b. above.**

This collection of information is required by 35 U.S.C. 119, 37 CFR 1.55, and 37 CFR 1.102(d). The information is required to obtain or retain a benefit by the public, which is to file (and by the USPTO to process) an application. Confidentiality is governed by 35 U.S.C. 122 and 37 CFR 1.11 and 1.14. This collection is estimated to take 2 hours to complete, including gathering, preparing, and submitting the completed application form to the USPTO. Time will vary depending upon the individual case. Any comments on the amount of time you require to complete this form and/or suggestions for reducing this burden should be sent to the Chief Information Officer, U.S. Patent and Trademark Office, U.S. Department of Commerce, P.O. Box 1450, Alexandria, VA 22313-1450. DO NOT SEND FEES OR COMPLETED FORMS TO THIS ADDRESS.

Approved for use through 01/31/2012. OMB 0651-0058
U.S.Patent and Trademark Office; U.S. DEPARTMENT OF COMMERCE

Under the Paperwork Reduction Act of 1995, no persons are required to respond to a collection of information unless it displays a valid OMB control number.

REQUEST FOR PARTICIPATION IN THE PCT-PPH PILOT PROGRAM BETWEEN THE EPO AND THE USPTO

(continued)

Application No.:	13/147,163
First Named Inventor:	Sato et al.

d. **(1) An information disclosure statement listing the documents cited in the international work products (ISR, WO/ISA, WO/IPEA, IPER) of the corresponding PCT application.**

☐ Is attached

☒ Has already been filed in the above-identified U.S. application on July 29, 2011

(2) Copies of all documents (except) for U.S. patents or U.S. patent application publications)

☐ Are attached.

☒ Have already been filed in the above-identified U.S. application on July 29, 2011

II. Claims Correspondence Table:

Claims in US Application	Patentable Claims in the corresponding PCT Application	Explanation regarding the correspondence
1	none	Claim 1 canceled.
2-9	2-9	Equivalent claim scope
10, 11	none	Claims 10 and 11 canceled.
12	12	Equivalent claim scope, but method claim rather than cell culture.
13-18	none	Claim 13-18 canceled.
19-34	none	Claims dependent on allowable claims
35	9	Rewritten in more typical Office forrmat
36-41	none specific	Claims dependent on allowable claims

III. All the claims in the US application sufficiently correspond to the patentable claims in the corresponding PCT application.

Signature	Date September 13, 2011
Name (Print/Typed) Allen C. Turner	Registration Number 33,041

Privacy Act Statement

The **Privacy Act of 1974 (P.L. 93-579)** requires that you be given certain information in connection with your submission of the attached form related to a patent application or patent. Accordingly, pursuant to the requirements of the Act, please be advised that: (1) the general authority for the collection of this information is 35 U.S.C. 2(b)(2); (2) furnishing of the information solicited is voluntary; and (3) the principal purpose for which the information is used by the U.S. Patent and Trademark Office is to process and/or examine your submission related to a patent application or patent. If you do not furnish the requested information, the U.S. Patent and Trademark Office may not be able to process and/or examine your submission, which may result in termination of proceedings or abandonment of the application or expiration of the patent.

The information provided by you in this form will be subject to the following routine uses:

1. The information on this form will be treated confidentially to the extent allowed under the Freedom of Information Act (5 U.S.C. 552) and the Privacy Act (5 U.S.C 552a). Records from this system of records may be disclosed to the Department of Justice to determine whether disclosure of these records is required by the Freedom of Information Act.
2. A record from this system of records may be disclosed, as a routine use, in the course of presenting evidence to a court, magistrate, or administrative tribunal, including disclosures to opposing counsel in the course of settlement negotiations.
3. A record in this system of records may be disclosed, as a routine use, to a Member of Congress submitting a request involving an individual, to whom the record pertains, when the individual has requested assistance from the Member with respect to the subject matter of the record.
4. A record in this system of records may be disclosed, as a routine use, to a contractor of the Agency having need for the information in order to perform a contract. Recipients of information shall be required to comply with the requirements of the Privacy Act of 1974, as amended, pursuant to 5 U.S.C. 552a(m).
5. A record related to an International Application filed under the Patent Cooperation Treaty in this system of records may be disclosed, as a routine use, to the International Bureau of the World Intellectual Property Organization, pursuant to the Patent Cooperation Treaty.
6. A record in this system of records may be disclosed, as a routine use, to another federal agency for purposes of National Security review (35 U.S.C. 181) and for review pursuant to the Atomic Energy Act (42 U.S.C. 218(c)).
7. A record from this system of records may be disclosed, as a routine use, to the Administrator, General Services, or his/her designee, during an inspection of records conducted by GSA as part of that agency's responsibility to recommend improvements in records management practices and programs, under authority of 44 U.S.C. 2904 and 2906. Such disclosure shall be made in accordance with the GSA regulations governing inspection of records for this purpose, and any other relevant (*i.e.*, GSA or Commerce) directive. Such disclosure shall not be used to make determinations about individuals.
8. A record from this system of records may be disclosed, as a routine use, to the public after either publication of the application pursuant to 35 U.S.C. 122(b) or issuance of a patent pursuant to 35 U.S.C. 151. Further, a record may be disclosed, subject to the limitations of 37 CFR 1.14, as a routine use, to the public if the record was filed in an application which became abandoned or in which the proceedings were terminated and which application is referenced by either a published application, an application open to public inspection or an issued patent.
9. A record from this system of records may be disclosed, as a routine use, to a Federal, State, or local law enforcement agency, if the USPTO becomes aware of a violation or potential violation of law or regulation.

UNITED STATES PATENT AND TRADEMARK OFFICE

Commissioner for Patents
United States Patent and Trademark Office
P.O. Box 1450
Alexandria, VA 22313-1450
www.uspto.gov

TRASKBRITT, P.C.
P.O. BOX 2550
SALT LAKE CITY, UT 84110

MAILED

MAR 01 2012

OFFICE OF PETITIONS

In re Application of
Toshiro SATO et al
Application No.: 13/147,163
Filed: September 14, 2011
Attorney Docket No.: 3482P10684US
For: CULTURE MEDIUM FOR EPITHELIAL STEM CELLS AND ORGANOIDS COMPRISING SAID STEM CELLS

: DECISION ON REQUEST TO
: PARTICIPATE IN THE PATENT
: PROSECUTION HIGHWAY
: PROGRAM AND PETITION
: TO MAKE SPECIAL UNDER
: 37 CFR 1.102(a)

This is a decision on the request to participate in the PCT Patent Prosecution Highway (PCT-PPH) pilot program and the petition under 37 CFR 1.102(a), filed on September 14, 2011, to make the above-identified application special.

The request and petition are **GRANTED**.

Discussion

A grantable request to participate in the PCT-PPH pilot program and petition to make special require:

(1) The U.S. application must have an eligible relationship to one or more PCT applications where the ISA or IPEA are the JPO, EPO, KIPO, NPI, Australia, Austria, Russia, Spain, Sweden, Finland, China, or USPTO;

(2) At least one claim in the PCT application has novelty, inventive step, and industrial applicability and must be free of any observations in Box VIII in the latest work product in the international stage or applicant must identify and explain why the claim(s) is/are not subject to the observation in Box VIII;

(3) Applicant must submit a copy of the claim(s) from the PCT application(s) that have novelty, inventive step, and industrial applicability along with an English translation thereof and a statement that the English translation is accurate, if the claims are not in the English language;

(4) All the claims in the U.S. application must sufficiently correspond or be amended to sufficiently correspond to the claim(s) that have novelty, inventive step, and industrial applicability in the PCT application(s);

(5) Examination of the U.S. application has not begun;

(6) Applicant must submit a copy of the latest international work product from the PCT application indicating that the claim(s) have novelty, inventive step, and industrial applicability along with an English translation thereof and a statement that the English translation is accurate if the latest international work product is not in the English language;

(7) Applicant must submit an IDS listing the documents cited by the PCT examiner in the international work product along with copies of documents except U.S. patents or U.S. patent application publications.

The request to participate in the PCT-PPH pilot program and petition comply with the above requirements. Accordingly, the above-identified application has been accorded "special" status.

Telephone inquiries concerning this decision should be directed to the undersigned at (571) 272-0602.

All other inquiries concerning the examination or status of the application is accessible in the PAIR system at http://www.uspto.gov/ebc.index.html.

This application is being referred to Technology Center Art Unit 1657 for action on the merits commensurate with this decision.

Thurman K. Page
Petitions Examiner
Office of Petitions

UNITED STATES PATENT AND TRADEMARK OFFICE

Commissioner for Patents
United States Patent and Trademark Office
P.O. Box 1450
Alexandria, VA 22313-1450
www.uspto.gov

32425
FULBRIGHT & JAWORSKI L.L.P.
98 San Jacinto Blvd.
Suite 1100
Austin, TX 78701-4255

MAILED

SEP 28 2011

PCT LEGAL ADMINISTRATION

In re Application of :
DZEKUNOV, Sergey :
U.S. Application No.: 13/147,165 :
PCT No.: PCT/US2009/050726 :
Int. Filing Date: 15 July 2009 :
Priority Date: 18 July 2008 :
Docket No.: MAXC.P0032US :
For: METHOD FOR OPTIMIZING :
ELECTROPORATION :

DECISION ON PETITION UNDER 37 CFR 1.137(b)

Applicant's petition to revive under 37 CFR 1.137(b) filed on 29 July 2011 is hereby **GRANTED** as follows:

The proper fees and petition fee have been paid. Applicant made the required statement pursuant to 37 CFR 1.137(b)(3). A terminal disclaimer is not required. Accordingly, all requirements under 37 CFR 1.137(b) have been satisfied.

A declaration in compliance with 37 CFR 1.497(a) and (b) was not submitted.

This application is being forwarded to the United States Designated/Elected Office for further processing including mailing a Notification of Missing Requirements Under 35 U.S.C. 371 in the United States Designated/Elected Office (DO/EO/US) (Form PCT/DO/EO/905) indicating that an oath or declaration in compliance with 37 CFR 1.497(a) and (b) and a $130.00 surcharge fee are required.

James Thomson
Attorney Advisor
Office of PCT Legal Administration

Tel.: (571) 272-3302

UNITED STATES PATENT AND TRADEMARK OFFICE

UNITED STATES DEPARTMENT OF COMMERCE
United States Patent and Trademark Office
Address: COMMISSIONER FOR PATENTS
P.O. Box 1450
Alexandria, Virginia 22313-1450
www.uspto.gov

APPLICATION NO.	FILING DATE	FIRST NAMED INVENTOR	ATTORNEY DOCKET NO.	CONFIRMATION NO.
13/147,169	07/29/2011	Michiel Bergstra	16035	1342

25570 7590 02/03/2012
ROBERTS MLOTKOWSKI SAFRAN & COLE, P.C.
Intellectual Property Department
P.O. Box 10064
MCLEAN, VA 22102-8064

EXAMINER
SCOTT, ANGELA C

ART UNIT	PAPER NUMBER
1767	

NOTIFICATION DATE	DELIVERY MODE
02/03/2012	ELECTRONIC

Please find below and/or attached an Office communication concerning this application or proceeding.

The time period for reply, if any, is set in the attached communication.

Notice of the Office communication was sent electronically on above-indicated "Notification Date" to the following e-mail address(es):

lgallaugher@rmsclaw.com
dbeltran@rmsclaw.com
docketing@rmsclaw.com

UNITED STATES PATENT AND TRADEMARK OFFICE

Commissioner for Patents
United States Patent and Trademark Office
P.O. Box 1450
Alexandria, VA 22313-1450
www.uspto.gov

ROBERTS MLOTKOWSKI SAFRAN & COLE, P.C.
Intellectual Property Department
P.O. Box 10064
MCLEAN VA 22102-8064

Applicant: Bergstra et al.
Appl. No.: 13/147,169
Filing Date: July 29, 2011
Title: MULTIMODAL POLYMER OF PROPYLENE, COMPOSITION CONTAINING THE SAME AND A PROCESS FOR MANUFACTURING THE SAME
Attorney Docket No.: 16035
Pub. No.: US 2011/0288213 A1
Pub. Date: November 24, 2011

This is a decision on the request for republication of patent application publication under 37 CFR 1.221(a), filed on January 27, 2012, for the above-identified application.

The request under 37 CFR 1.221(a) is DISMISSED.

37 CFR 1.221(a) requires "a copy of the application in compliance with the Office electronic filing system requirements and be accompanied by the publication fee set forth in § 1.18(d) and the processing fee set forth in § 1.17(i)". If the request for republication does not comply with the electronic filing system requirements, the republication will not take place and the publication fee set forth in § 1.18(d) will be refunded. The processing fee will be retained.

The applicant did not supply a copy of the application in compliance with the Office electronic filing system, as required by 37 CFR 1.221(a) because **the applicant submitted the papers as a "Document for an existing application", which are entered into the application file, and not as a "Pre-Grant Publication" submission**. The request for republication does not comply with the electronic filing system requirements, thus republication will not take place.

Any request for republication under 37 CFR 1.221(a), must be submitted via the EFS system, as a Pre-Grant publication submission and must include a copy of the application in compliance with the Office electronic filing system requirements. The applicant is directed to the following website for additional instructions on how to submit a Pre-Grant Publication submission via the electronic filing system:

http://www.uspto.gov/ebc/portal/efs/pgpub_quickstart.pdf

Any questions or requests for reconsideration of the decision should be addressed as follows:

By mail to: Mail Stop PGPUB
Commissioner for Patents
P.O. Box 1450
Alexandria, Va. 22313-1450

By facsimile: 571-273-8300

Telephone inquiries regarding this correspondence should be directed to The Office of Data Management at 571-272-4200.

Tammy J. Koontz
Office of Data Management
United States Patent & Trademark Office

Adjustment date: 02/03/2012 KKING1
01/31/2012 INTEFSW 00007152 502478 13147169
01 FC:1504 300.00 CR

UNITED STATES PATENT AND TRADEMARK OFFICE

Commissioner for Patents
United States Patent and Trademark Office
P.O. Box 1450
Alexandria, VA 22313-1450
www.uspto.gov

MAILED

SEP 28 2011

PCT LEGAL ADMINISTRATION

ABELMAN, FRAYNE & SCHWAB
666 THIRD AVENUE, 10TH FLOOR
NEW YORK NY 10017

In re Application of :
CHEVALIER, John Philip :
Application No.: 13/147,180 :
PCT No.: PCT/GB2009/002858 : DECISION
Int. Filing Date: 10 December 2009 :
Priority Date: 10 December 2008 :
Att. Docket No.: 211,596 :
For: LATCHES :

Applicant's petition under 37 CFR 1.137(b), filed in the United States Patent and Trademark Office on 29 July 2011, is **GRANTED**.

Applicant states that the entire delay in filing the required reply from the due date for the required reply until the filing of a grantable petition under 37 CFR 1.137(b) was unintentional, as required by 37 CFR 1.137(b)(3). The appropriate national fee and petition fee have been submitted. A terminal disclaimer is not required as the application was filed on or after 08 June 1995. Accordingly, all requirements under 37 CFR 1.137(b) have been satisfied.

The surcharge for filing the search fee, examination fee or oath or declaration after thirty months will be charged to deposit account no. 01-0035, as authorized.

This application is being referred to the National Stage Processing Branch of the Office of Patent Application Processing for continued processing in accordance with this decision.

/Erin P. Thomson/

Erin P. Thomson
Attorney Advisor
PCT Legal Administration

Telephone: 571-272-3292

PTO/SB/20PCT-EP (05-10)
Approved for use through 01/31/2012. OMB 0651-0058
U.S. Patent and Trademark Office; U. S. DEPARTMENT OF COMMERCE
Under the Paperwork Reduction Act of 1995, no persons are required to respond to a collection of information unless it displays a valid OMB control number.

REQUEST FOR PARTICIPATION IN THE PATENT COOPERATION TREATY - PATENT PROSECUTION HIGHWAY (PCT-PPH) PILOT PROGRAM BETWEEN THE EUROPEAN PATENT OFFICE (EPO) AND THE USPTO

Application No:	13/147,198	Filing date:	October 9, 2011
First Named Inventor:	Matthias Seiler		
Title of the Invention:	CO2 Absorption from Gas Mixtures Using an Aqueous Solution of 4-Amino-2,2,6,6-Tetra-Methylpiperidine		

THIS REQUEST FOR PARTICIPATION IN THE PCT-PPH PILOT PROGRAM ALONG WITH THE REQUIRED DOCUMENTS MUST BE SUBMITTED VIA EFS-WEB. INFORMATION REGARDING EFS-WEB IS AVAILABLE AT HTTP://WWW.USPTO.GOV/EBC/EFS_HELP.HTML

APPLICANT HEREBY REQUESTS PARTICIPATION IN THE PCT-PPH PROGRAM AND PETITIONS TO MAKE THE ABOVE-IDENTIFIED APPLICATION SPECIAL UNDER THE PCT-PPH PROGRAM.

The above-identified application is (1) a national stage entry of the corresponding PCT application, or (2) a national stage entry of another PCT application which claims priority to the corresponding PCT application, or (3) a national application that claims domestic/ foreign priority to the corresponding PCT application, or (4) a national application which forms the basis for the priority claim in the corresponding PCT application, or (5) a continuing application of a U.S. application that satisfies one of (1) to (4) above, or (6) a U.S. application that claims domestic benefit to a U.S. provisional application which forms the basis for the priority claim in the corresponding PCT application.

The corresponding PCT application number(s) is/are: PCT/EP2010/051083

The international filing date of the corresponding PCT application(s) is/are: January 29, 2010

I. List of Required Documents:

a. **A copy of the latest international work product (WO/ISA, WO/IPEA, or IPER) in the above–identified corresponding PCT application(s)**

☐ Is attached

☒ Is not attached because the document is already in the U.S. application.

b. **A copy of all claims which were indicated as having novelty, inventive step and industrial applicability in the above-identified corresponding PCT application(s).**

☐ Is attached.

☒ Is not attached because the document is already in the U.S. application.

c. **English translations of the documents in a. and b. above are attached (if the documents are not in the English language). A statement that the English translation is accurate is attached for the document in b. above.**

This collection of information is required by 35 U.S.C. 119, 37 CFR 1.55, and 37 CFR 1.102(d). The information is required to obtain or retain a benefit by the public, which is to file (and by the USPTO to process) an application. Confidentiality is governed by 35 U.S.C. 122 and 37 CFR 1.11 and 1.14. This collection is estimated to take 2 hours to complete, including gathering, preparing, and submitting the completed application form to the USPTO. Time will vary depending upon the individual case. Any comments on the amount of time you require to complete this form and/or suggestions for reducing this burden should be sent to the Chief Information Officer, U.S. Patent and Trademark Office, U.S. Department of Commerce, P.O. Box 1450, Alexandria, VA 22313-1450. DO NOT SEND FEES OR COMPLETED FORMS TO THIS ADDRESS.

Approved for use through 01/31/2012. OMB 0651-0058
U.S.Patent and Trademark Office; U.S. DEPARTMENT OF COMMERCE

Under the Paperwork Reduction Act of 1995, no persons are required to respond to a collection of information unless it displays a valid OMB control number.

REQUEST FOR PARTICIPATION IN THE PCT-PPH PILOT PROGRAM BETWEEN THE EPO AND THE USPTO

(continued)

Application No.:	13/147,198
First Named Inventor:	Matthias Seiler

d. **(1) An information disclosure statement listing the documents cited in the international work products (ISR, WO/ISA, WO/IPEA, IPER) of the corresponding PCT application.**

☐ Is attached

☒ Has already been filed in the above-identified U.S. application on 10/20/2011

(2) Copies of all documents (except) for U.S. patents or U.S. patent application publications)

☐ Are attached.

☒ Have already been filed in the above-identified U.S. application on 10/20/2011

II. Claims Correspondence Table:

Claims in US Application	Patentable Claims in the corresponding PCT Application	Explanation regarding the correspondence
21	1	Claim 21 is essentially identical to claim 1, save for minor grammatical changes.
22	2	Claim 22 corresponds to claim 2 with changes to accommodate U.S. practice.
23	3	Claim 23 corresponds to claim 3 without multiple dependency.
24	4	Claim 24 corresponds to claim 4 with changes to accommodate U.S. practice.
25	5	Claim 25 corresponds to claim 5 without multiple dependency.
26	6	Claim 26 corresponds to claim 6 without multiple dependency.
27	7	Claim 27 corresponds to claim 7 without multiple dependency.
28	8	Claim 28 corresponds to claim 8 with changes to accommodate U.S. practice.
29	9	Claim 29 corresponds to claim 9 with changes to accommodate U.S. practice.
30	10	Claim 30 corresponds to claim 10 without multiple dependency.
31	11	Claim 31 corresponds to claim 11 with changes to accommodate U.S. practice.
32	12	Claim 32 corresponds to claim 12 and accommodates its multiple dependency.
33	12	Claim 33 corresponds to claim 12 and accommodates its multiple dependency.
34	13	Claim 34 corresponds to claim 13, redrafted into independent form.
35	2	Claim 35 corresponds to claim 2 with changes to accommodate U.S. practice.
36	3	Claim 36 corresponds to claim 3 without multiple dependency.
37	4	Claim 37 corresponds to claim 4 with changes to accommodate U.S. practice.
38	5	Claim 38 corresponds to claim 5 without multiple dependency.
39	6	Claim 39 corresponds to claim 6 without multiple dependency.

III. All the claims in the US application sufficiently correspond to the patentable claims in the corresponding PCT application.

Signature /Andrew McAleavey/	Date 11/3/2011
Name (Print/Typed) Andrew McAleavey	Registration Number 50535

Privacy Act Statement

The **Privacy Act of 1974 (P.L. 93-579)** requires that you be given certain information in connection with your submission of the attached form related to a patent application or patent. Accordingly, pursuant to the requirements of the Act, please be advised that: (1) the general authority for the collection of this information is 35 U.S.C. 2(b)(2); (2) furnishing of the information solicited is voluntary; and (3) the principal purpose for which the information is used by the U.S. Patent and Trademark Office is to process and/or examine your submission related to a patent application or patent. If you do not furnish the requested information, the U.S. Patent and Trademark Office may not be able to process and/or examine your submission, which may result in termination of proceedings or abandonment of the application or expiration of the patent.

The information provided by you in this form will be subject to the following routine uses:

1. The information on this form will be treated confidentially to the extent allowed under the Freedom of Information Act (5 U.S.C. 552) and the Privacy Act (5 U.S.C 552a). Records from this system of records may be disclosed to the Department of Justice to determine whether disclosure of these records is required by the Freedom of Information Act.
2. A record from this system of records may be disclosed, as a routine use, in the course of presenting evidence to a court, magistrate, or administrative tribunal, including disclosures to opposing counsel in the course of settlement negotiations.
3. A record in this system of records may be disclosed, as a routine use, to a Member of Congress submitting a request involving an individual, to whom the record pertains, when the individual has requested assistance from the Member with respect to the subject matter of the record.
4. A record in this system of records may be disclosed, as a routine use, to a contractor of the Agency having need for the information in order to perform a contract. Recipients of information shall be required to comply with the requirements of the Privacy Act of 1974, as amended, pursuant to 5 U.S.C. 552a(m).
5. A record related to an International Application filed under the Patent Cooperation Treaty in this system of records may be disclosed, as a routine use, to the International Bureau of the World Intellectual Property Organization, pursuant to the Patent Cooperation Treaty.
6. A record in this system of records may be disclosed, as a routine use, to another federal agency for purposes of National Security review (35 U.S.C. 181) and for review pursuant to the Atomic Energy Act (42 U.S.C. 218(c)).
7. A record from this system of records may be disclosed, as a routine use, to the Administrator, General Services, or his/her designee, during an inspection of records conducted by GSA as part of that agency's responsibility to recommend improvements in records management practices and programs, under authority of 44 U.S.C. 2904 and 2906. Such disclosure shall be made in accordance with the GSA regulations governing inspection of records for this purpose, and any other relevant (*i.e.*, GSA or Commerce) directive. Such disclosure shall not be used to make determinations about individuals.
8. A record from this system of records may be disclosed, as a routine use, to the public after either publication of the application pursuant to 35 U.S.C. 122(b) or issuance of a patent pursuant to 35 U.S.C. 151. Further, a record may be disclosed, subject to the limitations of 37 CFR 1.14, as a routine use, to the public if the record was filed in an application which became abandoned or in which the proceedings were terminated and which application is referenced by either a published application, an application open to public inspection or an issued patent.
9. A record from this system of records may be disclosed, as a routine use, to a Federal, State, or local law enforcement agency, if the USPTO becomes aware of a violation or potential violation of law or regulation.

UNITED STATES PATENT AND TRADEMARK OFFICE

Commissioner for Patents
United States Patent and Trademark Office
P.O. Box 1450
Alexandria, VA 22313-1450
www.uspto.gov

LAW OFFICE OF MICHAEL A. SANZO, LLC
15400 CALHOUN DR.
SUITE 125
ROCKVILLE, MD 20855

MAILED
JAN 1 1 2012
OFFICE OF PETITIONS

In re Application of
Matthias SEILER, et al.
Application No.: 13/147,198
Filed: 9 October 2011
Attorney Docket No.: 7601/28000
For: CO2 ABSORPTION FROM GAS MIXTURES USING AN AQUEOUS SOLUTION OF 4-AMINO-2,2,6,6-TETRAMETHYPIPERIDINE

: DECISION ON REQUEST TO
: PARTICIPATE IN THE PATENT
: PROSECUTION HIGHWAY
: PROGRAM AND PETITION
: TO MAKE SPECIAL UNDER
: 37 CFR 1.102(a)

This is a decision on the request to participate in the PCT Patent Prosecution Highway (PCT-PPH) pilot program and the petition under 37 CFR 1.102(a), filed on November 3, 2011 and renewed on 14 November 2011, to make the above-identified application special.

The request and petition are **GRANTED**.

DISCUSSION

A grantable request to participate in the PCT-PPH pilot program and petition to make special require:

(1) The U.S. application must have an eligible relationship to one or more PCT applications where the ISA or IPEA are the JPO, EPO, KIPO, NPI, NBPR, or USPTO;

(2) At least one claim in the PCT application has novelty, inventive step, and industrial applicability and must be free of any observations in Box VIII in the latest work product in the international stage or applicant must identify and explain why the claim(s) is/are not subject to the observation in Box VIII;

(3) Applicant must submit a copy of the claim(s) from the PCT application(s) that have novelty, inventive step, and industrial applicability along with an English translation thereof and a statement that the English translation is accurate, if the claims are not in the English language;

(4) All the claims in the U.S. application must sufficiently correspond or be amended to sufficiently correspond to the claim(s) that have novelty, inventive step, and industrial applicability in the PCT application(s);

(5) Examination of the U.S. application has not begun;

(6) Applicant must submit a copy of the latest international work product from the PCT application indicating that the claim(s) have novelty, inventive step, and industrial applicability along with an English translation thereof and a statement that the English translation is accurate if the latest international work product is not in the English language;

(7) Applicant must submit an IDS listing the documents cited by the PCT examiner in the international work product along with copies of documents except U.S. patents or U.S. patent application publications.

The request to participate in the PCT-PPH pilot program and petition comply with the above requirements. Accordingly, the above-identified application has been accorded "special" status.

Telephone inquiries concerning this decision should be directed to April M. Wise at (571) 272-1642.

All other inquiries concerning the examination or status of the application is accessible in the PAIR system at http://www.uspto.gov/ebc.index.html.

This application will be forwarded to the examiner for action on the merits commensurate with this decision once this application's formality reviews have been completed.

/dab/
David Bucci
Petitions Examiner
Office of Petitions

PTO/SB/20PCT-KR (06-10)
Approved for use through 01/31/2012. OMB 0651-0058
U.S. Patent and Trademark Office; U. S. DEPARTMENT OF COMMERCE
Under the Paperwork Reduction Act of 1995, no persons are required to respond to a collection of information unless it displays a valid OMB control number.

REQUEST FOR PARTICIPATION IN THE PATENT COOPERATION TREATY - PATENT PROSECUTION HIGHWAY (PCT-PPH) PILOT PROGRAM BETWEEN THE KOREAN INTELLECTUAL PROPERTY OFFICE (KIPO) AND THE USPTO

Application No:	13/147,201	Filing date:	July 31, 2011
First Named Inventor:	Robert TERO		
Title of the Invention:	Nasal Interface Device		

THIS REQUEST FOR PARTICIPATION IN THE PCT-PPH PILOT PROGRAM ALONG WITH THE REQUIRED DOCUMENTS MUST BE SUBMITTED VIA EFS-WEB. INFORMATION REGARDING EFS-WEB IS AVAILABLE AT HTTP://WWW.USPTO.GOV/EBC/EFS_HELP.HTML

APPLICANT HEREBY REQUESTS PARTICIPATION IN THE PCT-PPH PROGRAM AND PETITIONS TO MAKE THE ABOVE-IDENTIFIED APPLICATION SPECIAL UNDER THE PCT-PPH PROGRAM.

The above-identified application is (1) a national stage entry of the corresponding PCT application, or (2) a national stage entry of another PCT application which claims priority to the corresponding PCT application, or (3) a national application that claims domestic/ foreign priority to the corresponding PCT application, or (4) a national application which forms the basis for the priority claim in the corresponding PCT application, or (5) a continuing application of a U.S. application that satisfies one of (1) to (4) above, or (6) a U.S. application that claims domestic benefit to a U.S. provisional application which forms the basis for the priority claim in the corresponding PCT application.

The corresponding PCT application number(s) is/are: PCT/US10/23159

The international filing date of the corresponding PCT application(s) is/are: February 4, 2010

I. List of Required Documents:

a. **A copy of the latest international work product (WO/ISA, WO/IPEA, or IPER) in the above–identified corresponding PCT application(s)**

☐ Is attached.

☑ Is not attached because the document is already in the U.S. application.

b. **A copy of all claims which were indicated as having novelty, inventive step and industrial applicability in the above-identified corresponding PCT application(s).**

☐ Is attached.

☑ Is not attached because the document is already in the U.S. application.

c. **English translations of the documents in a. and b. above are attached (if the documents are not in the English language). A statement that the English translation is accurate is attached for the document in b. above.**

This collection of information is required by 35 U.S.C. 119, 37 CFR 1.55, and 37 CFR 1.102(d). The information is required to obtain or retain a benefit by the public, which is to file (and by the USPTO to process) an application. Confidentiality is governed by 35 U.S.C. 122 and 37 CFR 1.11 and 1.14. This collection is estimated to take 2 hours to complete, including gathering, preparing, and submitting the completed application form to the USPTO. Time will vary depending upon the individual case. Any comments on the amount of time you require to complete this form and/or suggestions for reducing this burden should be sent to the Chief Information Officer, U.S. Patent and Trademark Office, U.S. Department of Commerce, P.O. Box 1450, Alexandria, VA 22313-1450. DO NOT SEND FEES OR COMPLETED FORMS TO THIS ADDRESS.

Approved for use through 01/31/2012. OMB 0651-0058
U.S.Patent and Trademark Office; U.S. DEPARTMENT OF COMMERCE
Under the Paperwork Reduction Act of 1995, no persons are required to respond to a collection of information unless it displays a valid OMB control number.

REQUEST FOR PARTICIPATION IN THE PCT-PPH PILOT PROGRAM BETWEEN THE KIPO AND THE USPTO

(continued)

Application No.:	13/147,201
First Named Inventor:	Robert TERO

d. **(1) An information disclosure statement listing the documents cited in the international work products (ISR, WO/ISA, WO/IPEA, IPER) of the corresponding PCT application.**

☐ Is attached

☑ Has already been filed in the above-identified U.S. application on August 14, 2011

(2) Copies of all documents (except) for U.S. patents or U.S. patent application publications)

☐ Are attached.

☑ Have already been filed in the above-identified U.S. application on August 14, 2011

II. Claims Correspondence Table:

Claims in US Application	Patentable Claims in the corresponding PCT Application	Explanation regarding the correspondence
1-20	1-20	Identical

III. All the claims in the US application sufficiently correspond to the patentable claims in the corresponding PCT application.

Signature /Joseph E. Maenner/	Date 15 August 2011
Name (Print/Typed) Joseph E. Maenner	Registration Number 41964

Privacy Act Statement

The **Privacy Act of 1974 (P.L. 93-579)** requires that you be given certain information in connection with your submission of the attached form related to a patent application or patent. Accordingly, pursuant to the requirements of the Act, please be advised that: (1) the general authority for the collection of this information is 35 U.S.C. 2(b)(2); (2) furnishing of the information solicited is voluntary; and (3) the principal purpose for which the information is used by the U.S. Patent and Trademark Office is to process and/or examine your submission related to a patent application or patent. If you do not furnish the requested information, the U.S. Patent and Trademark Office may not be able to process and/or examine your submission, which may result in termination of proceedings or abandonment of the application or expiration of the patent.

The information provided by you in this form will be subject to the following routine uses:

1. The information on this form will be treated confidentially to the extent allowed under the Freedom of Information Act (5 U.S.C. 552) and the Privacy Act (5 U.S.C 552a). Records from this system of records may be disclosed to the Department of Justice to determine whether disclosure of these records is required by the Freedom of Information Act.
2. A record from this system of records may be disclosed, as a routine use, in the course of presenting evidence to a court, magistrate, or administrative tribunal, including disclosures to opposing counsel in the course of settlement negotiations.
3. A record in this system of records may be disclosed, as a routine use, to a Member of Congress submitting a request involving an individual, to whom the record pertains, when the individual has requested assistance from the Member with respect to the subject matter of the record.
4. A record in this system of records may be disclosed, as a routine use, to a contractor of the Agency having need for the information in order to perform a contract. Recipients of information shall be required to comply with the requirements of the Privacy Act of 1974, as amended, pursuant to 5 U.S.C. 552a(m).
5. A record related to an International Application filed under the Patent Cooperation Treaty in this system of records may be disclosed, as a routine use, to the International Bureau of the World Intellectual Property Organization, pursuant to the Patent Cooperation Treaty.
6. A record in this system of records may be disclosed, as a routine use, to another federal agency for purposes of National Security review (35 U.S.C. 181) and for review pursuant to the Atomic Energy Act (42 U.S.C. 218(c)).
7. A record from this system of records may be disclosed, as a routine use, to the Administrator, General Services, or his/her designee, during an inspection of records conducted by GSA as part of that agency's responsibility to recommend improvements in records management practices and programs, under authority of 44 U.S.C. 2904 and 2906. Such disclosure shall be made in accordance with the GSA regulations governing inspection of records for this purpose, and any other relevant (*i.e.*, GSA or Commerce) directive. Such disclosure shall not be used to make determinations about individuals.
8. A record from this system of records may be disclosed, as a routine use, to the public after either publication of the application pursuant to 35 U.S.C. 122(b) or issuance of a patent pursuant to 35 U.S.C. 151. Further, a record may be disclosed, subject to the limitations of 37 CFR 1.14, as a routine use, to the public if the record was filed in an application which became abandoned or in which the proceedings were terminated and which application is referenced by either a published application, an application open to public inspection or an issued patent.
9. A record from this system of records may be disclosed, as a routine use, to a Federal, State, or local law enforcement agency, if the USPTO becomes aware of a violation or potential violation of law or regulation.

UNITED STATES PATENT AND TRADEMARK OFFICE

UNITED STATES DEPARTMENT OF COMMERCE
United States Patent and Trademark Office
Address: COMMISSIONER FOR PATENTS
P.O. Box 1450
Alexandria, Virginia 22313-1450
www.uspto.gov

APPLICATION NO.	FILING DATE	FIRST NAMED INVENTOR	ATTORNEY DOCKET NO.	CONFIRMATION NO.
13/147,201	07/31/2011	Robert Tero	TER-001	1033

53265 7590 09/26/2011
MAENNER & ASSOCIATES, LLC
P.O. Box 90
388 Main Street
Harleysville, PA 19438

EXAMINER

ART UNIT	PAPER NUMBER
3771	

MAIL DATE	DELIVERY MODE
09/26/2011	PAPER

Please find below and/or attached an Office communication concerning this application or proceeding.

The time period for reply, if any, is set in the attached communication.

UNITED STATES PATENT AND TRADEMARK OFFICE

Commissioner for Patents
United States Patent and Trademark Office
P.O. Box 1450
Alexandria, VA 22313-1450
www.uspto.gov

MAENNER & ASSOCIATES, LLC
P.O. Box 90
388 Main Street
Harleysville PA 19438

In re Application of	
TERO, ROBERT	: DECISION ON REQUEST TO
Application No. 13/147,201	: PARTICIPATE IN PATENT
Filed: July 31, 2011	: PCT/PROSECUTION HIGHWAY
Attorney Docket No. TER-001	: PROGRAM AND PETITION
For: NASAL INTERFACE DEVICE	: TO MAKE SPECIAL UNDER
	: 37 CFR 1.102(a)

This is a decision on the request to participate in the Patent Prosecution Highway (PPH) program and the petition under 37 CFR 1.102(a), filed August 16, 2011 to make the above-identified application special.

The request and petition are granted.

A grantable request to participate in the PPH pilot program and petition to make special require:

(1) The U.S. application must validly claim priority under 35 U.S.C. 119(a) to one or more applications filed in the JPO;
(2) Applicant must submit a copy of the allowable/patentable claim(s) from the JPO/PCT application(s) along with an English translation thereof and a statement that the English translation is accurate;
(3) All the claims in the U.S. application must sufficiently correspond or be amended to sufficiently correspond to the allowable/patentable claim(s) in the JPO application(s);
(4) Examination of the U.S. application has not begun;
(5) Applicant must submit a copy of all the office actions from each of the JPO/PCT application(s) containing the allowable/patentable claim(s) along with an English translation thereof and a statement that the English translation is accurate; and
(6) Applicant must submit an IDS listing the documents cited by the JPO examiner in the JPO office action along with copies of documents except U.S. patents or U.S. patent application publications.
In light of the petition being properly submitted, the request to participate in the PPH program and the petition comply with the above requirements. Accordingly, the above-identified application has been accorded "special" status.

The applicant is encouraged to cite and submit all relevant prior art references, if any, to facilitate examination in this application. Upon completion of pre-examination processing, this application will be forwarded to an examiner for examination.

Telephone inquiries concerning this decision should be directed to Henry C. Yuen at 571-272-4485. All other inquiries concerning the examination or status of the application should be directed to Justin Yu, SPE of Art Unit 3771, and 571-272-4835 for Class 128 and also accessible in the PAIR system at http://www.uspto.gov/ebc.index.html.

Petition is **granted**.

/Henry C. Yuen/

Henry C. Yuen, Special Programs Examiner
Technology Center 3700 – Mechanical Engineering,
Manufacturing and Products
571-272-4856

UNITED STATES PATENT AND TRADEMARK OFFICE

Commissioner for Patents
United States Patent and Trademark Office
P.O. Box 1450
Alexandria, VA 22313-1450
www.uspto.gov

MAILED

JAN 3 0 2012

PCT LEGAL ADMINISTRATION

HWU, CHYN HERNG
11F, No. 3, Lane 53, Guanming Rd.
Pingzhen City
Taoyuan County, 32446 TW
TAIWAN

In re Application of
Hwu
Application No.: 13/147,216 & 13/147,226
PCT No.: PCT/IB2010/050404
Int. Filing Date: 29 January 2010
Priority Date: 02 February 2009
Attorney Docket No.: N/A
For: The World's 1st Martial Arts (Fighting Sports) Training Instrument And Fighting Ability Index Appraisal System

DECISION

This is in response to the correspondence filed on 01 August 2011.

BACKGROUND

International application PCT/IB2010/050404 was filed on 29 January 2010, claimed an earlier priority date of 02 February 2009, and designated the United States. The International Bureau transmitted a copy of the published international application to the USPTO on 05 August 2010. The period for payment of the basic national fee in the United States expired as of midnight on 02 August 2011. Applicant filed *inter alia* a basic national fee directed toward said international application in 13/147,216 on 01 August 2011. Applicant also filed correspondence on the same date, which was assigned to application no. 13/147,226.

DISCUSSION

Review of the record reveals that applicant has filed two sets of correspondence, 13/147,216 and 13/147,226, directed toward the national stage under 35 U.S.C. 371 of the same international application, PCT/IB2010/050404. Any particular international application under the PCT culminates in a single national stage entry in the United States under 35 U.S.C. 371; multiple national stage entries of a single PCT application are not permitted. As such, since these purported national stage entries were both intended as the national stage of the same international application, it would be appropriate to merge the applications. Since a Notice of Acceptance (Form PCT/DO/EO/903) already has been mailed in 13/147,216, and since fees have not been charged and applied to 13/147,226, the papers filed in 13/147,226 are being placed into the '216 application file. All future correspondence should be directed toward 13/147,216.

DECISION

The application papers are **ACCEPTED**, as described above.

Application number 13/147,226 has not been activated, but has been merged with 13/147,216. All further correspondence with respect to this matter should be directed to 13/147,216.

/George Dombroske/
George Dombroske
PCT Legal Examiner
Office of PCT Legal Administration
Tel: (571) 272-3283

PTO/SB/20PCT-KR (06-10)
Approved for use through 01/31/2012. OMB 0651-0058
U.S. Patent and Trademark Office; U. S. DEPARTMENT OF COMMERCE
Under the Paperwork Reduction Act of 1995, no persons are required to respond to a collection of information unless it displays a valid OMB control number.

REQUEST FOR PARTICIPATION IN THE PATENT COOPERATION TREATY - PATENT PROSECUTION HIGHWAY (PCT-PPH) PILOT PROGRAM BETWEEN THE KOREAN INTELLECTUAL PROPERTY OFFICE (KIPO) AND THE USPTO

Application No:		Filing date:	August 1, 2011
First Named Inventor:	Simonetti et al.		
Title of the Invention:	METHOD FOR SHARING DATA BETWEEN DATA SETS WITH DIFFERENTIALLY ENCODED DATA		

THIS REQUEST FOR PARTICIPATION IN THE PCT-PPH PILOT PROGRAM ALONG WITH THE REQUIRED DOCUMENTS MUST BE SUBMITTED VIA EFS-WEB. INFORMATION REGARDING EFS-WEB IS AVAILABLE AT HTTP://WWW.USPTO.GOV/EBC/EFS_HELP.HTML

APPLICANT HEREBY REQUESTS PARTICIPATION IN THE PCT-PPH PROGRAM AND PETITIONS TO MAKE THE ABOVE-IDENTIFIED APPLICATION SPECIAL UNDER THE PCT-PPH PROGRAM.

The above-identified application is (1) a national stage entry of the corresponding PCT application, or (2) a national stage entry of another PCT application which claims priority to the corresponding PCT application, or (3) a national application that claims domestic/ foreign priority to the corresponding PCT application, or (4) a national application which forms the basis for the priority claim in the corresponding PCT application, or (5) a continuing application of a U.S. application that satisfies one of (1) to (4) above, or (6) a U.S. application that claims domestic benefit to a U.S. provisional application which forms the basis for the priority claim in the corresponding PCT application.

The corresponding PCT application number(s) is/are: PCT/US2010/022748

The international filing date of the corresponding PCT application(s) is/are: February 1, 2010

I. List of Required Documents:

a. **A copy of the latest international work product (WO/ISA, WO/IPEA, or IPER) in the above–identified corresponding PCT application(s)**

☐ Is attached.

☑ Is not attached because the document is already in the U.S. application.

b. **A copy of all claims which were indicated as having novelty, inventive step and industrial applicability in the above-identified corresponding PCT application(s).**

☐ Is attached.

☑ Is not attached because the document is already in the U.S. application.

c. **English translations of the documents in a. and b. above are attached (if the documents are not in the English language). A statement that the English translation is accurate is attached for the document in b. above.**

This collection of information is required by 35 U.S.C. 119, 37 CFR 1.55, and 37 CFR 1.102(d). The information is required to obtain or retain a benefit by the public, which is to file (and by the USPTO to process) an application. Confidentiality is governed by 35 U.S.C. 122 and 37 CFR 1.11 and 1.14. This collection is estimated to take 2 hours to complete, including gathering, preparing, and submitting the completed application form to the USPTO. Time will vary depending upon the individual case. Any comments on the amount of time you require to complete this form and/or suggestions for reducing this burden should be sent to the Chief Information Officer, U.S. Patent and Trademark Office, U.S. Department of Commerce, P.O. Box 1450, Alexandria, VA 22313-1450. DO NOT SEND FEES OR COMPLETED FORMS TO THIS ADDRESS.

Approved for use through 01/31/2012. OMB 0651-0058
U.S.Patent and Trademark Office; U.S. DEPARTMENT OF COMMERCE
Under the Paperwork Reduction Act of 1995, no persons are required to respond to a collection of information unless it displays a valid OMB control number.

REQUEST FOR PARTICIPATION IN THE PCT-PPH PILOT PROGRAM BETWEEN THE KIPO AND THE USPTO

(continued)

Application No.:	
First Named Inventor:	Simonetti et al.

d. **(1) An information disclosure statement listing the documents cited in the international work products (ISR, WO/ISA, WO/IPEA, IPER) of the corresponding PCT application.**

- [✓] Is attached
- [ ] Has already been filed in the above-identified U.S. application on _____

(2) Copies of all documents (except) for U.S. patents or U.S. patent application publications)

- [✓] Are attached.
- [ ] Have already been filed in the above-identified U.S. application on _____

II. Claims Correspondence Table:

Claims in US Application	Patentable Claims in the corresponding PCT Application	Explanation regarding the correspondence
1-6	1-6	Identical

III. All the claims in the US application sufficiently correspond to the patentable claims in the corresponding PCT application.

Signature /Carol G. Stovsky/	Date August 1, 2011
Name (Print/Typed) Carol G. Stovsky	Registration Number 42,171

UNITED STATES PATENT AND TRADEMARK OFFICE

UNITED STATES DEPARTMENT OF COMMERCE
United States Patent and Trademark Office
Address: COMMISSIONER FOR PATENTS
P.O. Box 1450
Alexandria, Virginia 22313-1450
www.uspto.gov

APPLICATION NO.	FILING DATE	FIRST NAMED INVENTOR	ATTORNEY DOCKET NO.	CONFIRMATION NO.
13/147,342	09/19/2011	Chang Ho Cho	3570-151	2274

6449 7590 11/16/2011
ROTHWELL, FIGG, ERNST & MANBECK, P.C.
1425 K STREET, N.W.
SUITE 800
WASHINGTON, DC 20005

EXAMINER

ART UNIT	PAPER NUMBER
1722	

NOTIFICATION DATE	DELIVERY MODE
11/16/2011	ELECTRONIC

Please find below and/or attached an Office communication concerning this application or proceeding.

The time period for reply, if any, is set in the attached communication.

Notice of the Office communication was sent electronically on above-indicated "Notification Date" to the following e-mail address(es):

PTO-PAT-Email@rfem.com

UNITED STATES PATENT AND TRADEMARK OFFICE

Commissioner for Patents
United States Patent and Trademark Office
P.O. Box 1450
Alexandria, VA 22313-1450
www.uspto.gov

BC

November 15, 2011

In re application of	:	DECISION ON REQUEST TO
Chang Ho Cho et al.	:	PARTICIPATE IN PATENT
Serial No. 13/147,342	:	PROSECUTION HIGHWAY
Filed: August 01, 2011	:	PROGRAM AND
Attorney Docket No: 3570-151	:	PETITION TO MAKE SPECIAL
	:	UNDER 37 CFR 1.102(a)

This is a decision on the request for reconsideration to participate in the Patent Prosecution Highway (PPH) program and the petition under 37 CFR 1.102(a) to make the above-identified application special filed October 24, 2011.

The request and petition are **GRANTED**.

A grantable request to participate in the PPH program and petition to make special require:

(1) The U.S. application must validly claim priority under 35 U.S.C. 119(a) to one or more applications filed in the KIPO, note where the KIPO application with similar claims is not the same application from which the U.S. application claims priority that the applicant must identify the relationship between the KIPO application with similar claims and the KIPO priority application;

(2) Applicant must submit a copy of:
   a. The allowable/patentable claim(s) from the KIPO application(s);
   b. An English translation of the allowable/ patentable claim(s); and
   c. A statement that the English translation is accurate;

(3) Applicant must:
   a. Ensure all the claims in the U.S. application must sufficiently correspond or be amended to sufficiently correspond to the allowable/patentable claim(s) in the KIPO application(s); and
   b. Submit a claims correspondence table in English;

(4) Examination of the U.S. application has not begun;

(5) Applicant must submit a copy of:
   a. All of the Office actions from each of the KIPO application(s) containing the allowable/patentable claim(s) that are the basis for the request;

b. An English language translation of the KIPO Office actions from (5)(a) above; and
c. A statement that the English translation is accurate; and

(6) Applicant must submit:
a. An IDS listing the documents cited by the KIPO examiner in the KIPO office action (unless already submitted in this application)
b. Copies of documents except U.S. patents or U.S. patent application publications (unless already submitted in this application).

The request to participate in the PPH program and petition comply with the above requirements. Accordingly, the above-identified application has been accorded "special" status.

The application is being forwarded to the examiner for action on the merits commensurate with this decision.

Any inquiry regarding this decision should be directed to Blaine Copenheaver, Quality Assurance Specialist, at (571) 272-1156.

All other inquiries concerning the examination or status of the application is accessible in the PAIR system at http://www.uspto.gov/ebc/index.html.

/Blaine Copenheaver/

Blaine Copenheaver
Quality Assurance Specialist
Technology Center 1700

PTO/SB/20PCT-EP (05-10)
Approved for use through 01/31/2012. OMB 0651-0058
U.S. Patent and Trademark Office; U. S. DEPARTMENT OF COMMERCE
Under the Paperwork Reduction Act of 1995, no persons are required to respond to a collection of information unless it displays a valid OMB control number.

REQUEST FOR PARTICIPATION IN THE PATENT COOPERATION TREATY - PATENT PROSECUTION HIGHWAY (PCT-PPH) PILOT PROGRAM BETWEEN THE EUROPEAN PATENT OFFICE (EPO) AND THE USPTO

Application No:	13/147,416	Filing date:	August 2, 2011
First Named Inventor:	Wolfgang Wenger		
Title of the Invention:	Novel Tricyanoborates		

THIS REQUEST FOR PARTICIPATION IN THE PCT-PPH PILOT PROGRAM ALONG WITH THE REQUIRED DOCUMENTS MUST BE SUBMITTED VIA EFS-WEB. INFORMATION REGARDING EFS-WEB IS AVAILABLE AT HTTP://WWW.USPTO.GOV/EBC/EFS_HELP.HTML

APPLICANT HEREBY REQUESTS PARTICIPATION IN THE PCT-PPH PROGRAM AND PETITIONS TO MAKE THE ABOVE-IDENTIFIED APPLICATION SPECIAL UNDER THE PCT-PPH PROGRAM.

The above-identified application is (1) a national stage entry of the corresponding PCT application, or (2) a national stage entry of another PCT application which claims priority to the corresponding PCT application, or (3) a national application that claims domestic/ foreign priority to the corresponding PCT application, or (4) a national application which forms the basis for the priority claim in the corresponding PCT application, or (5) a continuing application of a U.S. application that satisfies one of (1) to (4) above, or (6) a U.S. application that claims domestic benefit to a U.S. provisional application which forms the basis for the priority claim in the corresponding PCT application.

The corresponding PCT application number(s) is/are: PCT/EP2010/000426

The international filing date of the corresponding PCT application(s) is/are: January 26, 2010

I. List of Required Documents:

a. **A copy of the latest international work product (WO/ISA, WO/IPEA, or IPER) in the above–identified corresponding PCT application(s)**

☐ Is attached

☒ Is not attached because the document is already in the U.S. application.

b. **A copy of all claims which were indicated as having novelty, inventive step and industrial applicability in the above-identified corresponding PCT application(s).**

☐ Is attached.

☒ Is not attached because the document is already in the U.S. application.

c. **English translations of the documents in a. and b. above are attached (if the documents are not in the English language). A statement that the English translation is accurate is attached for the document in b. above.**

This collection of information is required by 35 U.S.C. 119, 37 CFR 1.55, and 37 CFR 1.102(d). The information is required to obtain or retain a benefit by the public, which is to file (and by the USPTO to process) an application. Confidentiality is governed by 35 U.S.C. 122 and 37 CFR 1.11 and 1.14. This collection is estimated to take 2 hours to complete, including gathering, preparing, and submitting the completed application form to the USPTO. Time will vary depending upon the individual case. Any comments on the amount of time you require to complete this form and/or suggestions for reducing this burden should be sent to the Chief Information Officer, U.S. Patent and Trademark Office, U.S. Department of Commerce, P.O. Box 1450, Alexandria, VA 22313-1450. DO NOT SEND FEES OR COMPLETED FORMS TO THIS ADDRESS.

Approved for use through 01/31/2012. OMB 0651-0058
U.S.Patent and Trademark Office; U.S. DEPARTMENT OF COMMERCE
Under the Paperwork Reduction Act of 1995, no persons are required to respond to a collection of information unless it displays a valid OMB control number.

REQUEST FOR PARTICIPATION IN THE PCT-PPH PILOT PROGRAM BETWEEN THE EPO AND THE USPTO

(continued)

Application No.:	13/147,416
First Named Inventor:	Wolfgang Wenger

d. **(1) An information disclosure statement listing the documents cited in the international work products (ISR, WO/ISA, WO/IPEA, IPER) of the corresponding PCT application.**

☐ Is attached

☒ Has already been filed in the above-identified U.S. application on August 2, 2011

(2) Copies of all documents (except) for U.S. patents or U.S. patent application publications)

☐ Are attached.

☒ Have already been filed in the above-identified U.S. application on August 2, 2011

II. Claims Correspondence Table:

Claims in US Application	Patentable Claims in the corresponding PCT Application	Explanation regarding the correspondence
1	1	Identical
2	2	Identical
3	3	Multiple Dependency Deleted
4	4	Identical
5	5	Multiple Dependency Deleted
6	6	Multiple Dependency Deleted
7	7	Identical
8	8	Multiple Dependency Deleted
9	9	Multiple Dependency Deleted, "Preferably" Clause Deleted
10	10	"Preferably" Clause Deleted
11	11	Identical
12	12	"Use" Changed to Composition, Multiple Dependency Deleted
13	13	Identical
14	14	Multiple Dependency Deleted
15	15	Limitation of Claim 13 Added
16	3	Made Singly Dependent
17	4	Made Singly Dependent
18	5	Made Singly Dependent
19	5	Made Singly Dependent

III. All the claims in the US application sufficiently correspond to the patentable claims in the corresponding PCT application.

Signature /Sandra B. Weiss/	Date October 3, 2011
Name (Print/Typed) Sandra B. Weiss	Registration Number 30814

II. Claims Correspondence Table: (cont'd)

Claims In US Application	Patentable Claims in the corresponding PCT Application	Explanation regarding the Correspondence
20	5	Made Singly Dependent
21	6	Made Singly Dependent
22	6	Made Singly Dependent
23	6	Made Singly Dependent
24	2,6,7	Made Singly Dependent
25	3,6,7	Made Singly Dependent
26	4,6,7	Made Singly Dependent
27	7,8	Made Singly Dependent
28	7,9	Made Singly Dependent
29	8,9	Made Singly Dependent

Privacy Act Statement

The **Privacy Act of 1974 (P.L. 93-579)** requires that you be given certain information in connection with your submission of the attached form related to a patent application or patent. Accordingly, pursuant to the requirements of the Act, please be advised that: (1) the general authority for the collection of this information is 35 U.S.C. 2(b)(2); (2) furnishing of the information solicited is voluntary; and (3) the principal purpose for which the information is used by the U.S. Patent and Trademark Office is to process and/or examine your submission related to a patent application or patent. If you do not furnish the requested information, the U.S. Patent and Trademark Office may not be able to process and/or examine your submission, which may result in termination of proceedings or abandonment of the application or expiration of the patent.

The information provided by you in this form will be subject to the following routine uses:

1. The information on this form will be treated confidentially to the extent allowed under the Freedom of Information Act (5 U.S.C. 552) and the Privacy Act (5 U.S.C 552a). Records from this system of records may be disclosed to the Department of Justice to determine whether disclosure of these records is required by the Freedom of Information Act.
2. A record from this system of records may be disclosed, as a routine use, in the course of presenting evidence to a court, magistrate, or administrative tribunal, including disclosures to opposing counsel in the course of settlement negotiations.
3. A record in this system of records may be disclosed, as a routine use, to a Member of Congress submitting a request involving an individual, to whom the record pertains, when the individual has requested assistance from the Member with respect to the subject matter of the record.
4. A record in this system of records may be disclosed, as a routine use, to a contractor of the Agency having need for the information in order to perform a contract. Recipients of information shall be required to comply with the requirements of the Privacy Act of 1974, as amended, pursuant to 5 U.S.C. 552a(m).
5. A record related to an International Application filed under the Patent Cooperation Treaty in this system of records may be disclosed, as a routine use, to the International Bureau of the World Intellectual Property Organization, pursuant to the Patent Cooperation Treaty.
6. A record in this system of records may be disclosed, as a routine use, to another federal agency for purposes of National Security review (35 U.S.C. 181) and for review pursuant to the Atomic Energy Act (42 U.S.C. 218(c)).
7. A record from this system of records may be disclosed, as a routine use, to the Administrator, General Services, or his/her designee, during an inspection of records conducted by GSA as part of that agency's responsibility to recommend improvements in records management practices and programs, under authority of 44 U.S.C. 2904 and 2906. Such disclosure shall be made in accordance with the GSA regulations governing inspection of records for this purpose, and any other relevant (*i.e.*, GSA or Commerce) directive. Such disclosure shall not be used to make determinations about individuals.
8. A record from this system of records may be disclosed, as a routine use, to the public after either publication of the application pursuant to 35 U.S.C. 122(b) or issuance of a patent pursuant to 35 U.S.C. 151. Further, a record may be disclosed, subject to the limitations of 37 CFR 1.14, as a routine use, to the public if the record was filed in an application which became abandoned or in which the proceedings were terminated and which application is referenced by either a published application, an application open to public inspection or an issued patent.
9. A record from this system of records may be disclosed, as a routine use, to a Federal, State, or local law enforcement agency, if the USPTO becomes aware of a violation or potential violation of law or regulation.

UNITED STATES PATENT AND TRADEMARK OFFICE

Commissioner for Patents
United States Patent and Trademark Office
P.O. Box 1450
Alexandria, VA 22313-1450
www.uspto.gov

MCDONNELL BOEHNEN HULBERT
& BERGHOFF LLP
300 S. WACKER DRIVE
32ND FLOOR
CHICAGO IL 60606

MAILED
FEB 27 2012
OFFICE OF PETITIONS

In re Application of
Wolfgang Wenger et al.
Application No.: 13/147,416
Filed: August 2, 2011
Attorney Docket No.: 11-979-WO-US
For: Novel Tricyanoborates

: DECISION ON REQUEST TO
: PARTICIPATE IN THE PATENT
: PROSECUTION HIGHWAY
: PROGRAM AND PETITION
: TO MAKE SPECIAL UNDER
: 37 CFR 1.102(a)

This is a decision on the request to participate in the PCT Patent Prosecution Highway (PCT-PPH) pilot program and the petition under 37 CFR 1.102(a), filed on October 3, 2011, to make the above-identified application special.

The request and petition are **DISMISSED**.

Discussion

A grantable request to participate in the PCT-PPH pilot program and petition to make special require:

1) The U.S. application must have an eligible relationship to one or more PCT applications where the ISA or IPEA are Australia, Austria, China, EPO, Finland, JPO, Korea, NPI, Russia, Spain, Sweden and the USPTO;

(2) At least one claim in the PCT application has novelty, inventive step, and industrial applicability and must be free of any observations in Box VIII in the latest work product in the international stage or applicant must identify and explain why the claim(s) is/are not subject to the observation in Box VIII;

(3) Applicant must submit a copy of the claim(s) from the PCT application(s) that have novelty, inventive step, and industrial applicability along with an English translation thereof and a statement that the English translation is accurate, if the claims are not in the English language;

(4) All the claims in the U.S. application must sufficiently correspond or be amended to sufficiently correspond to the claim(s) that have novelty, inventive step, and industrial applicability in the PCT application(s);

(5) Examination of the U.S. application has not begun;

(6) Applicant must submit a copy of the latest international work product from the PCT application indicating that the claim(s) have novelty, inventive step, and industrial applicability along with an English translation thereof and a statement that the English translation is accurate if the latest international work product is not in the English language;

(7) Applicant must submit an IDS listing the documents cited by the PCT examiner in the international work product along with copies of documents except U.S. patents or U.S. patent application publications.

(8) Applicant is required to submit a claims correspondence table in English which indicates how all the claims in the U.S. application correspond to the claims indicated as having novelty, inventive step and industrial applicability in the latest international work product.

The request to participate in the PPH pilot program and petition fails to meet requirement (4).

Regarding requirement (4), claims do not sufficiently correspond. Specifically, US claim 12 does not correspond to EP claim 12 because the category of the claim has changed from "use" to a "composition".

Applicant is given **ONE** opportunity within a time period of **ONE MONTH or THIRTY DAYS**, whichever is longer, from the mailing date of this decision to correct the deficiencies. **NO EXTENSION OF TIME UNDER 37 CFR 1.136 IS PERMITTED.** If the deficiencies are not corrected with the time period given, the application will await action in its regular turn.

Response must be filed via the Electronic Filing System (EFS) using the document description: Petition to make special under PCT – Patent Pros Hwy. Any preliminary amendments and IDS submitted with the PPH documents must be separately indexed as a preliminary amendment and IDS, respectively.

Telephone inquiries concerning this decision should be directed to Kimberly Inabinet at 571-272-4618.

All other inquiries concerning the examination or status of the application is accessible in the PAIR system at http://www.uspto.gov/ebc/index.html.

David Bucci
Petitions Examiner
Office of Petitions

IN THE UNITED STATES PATENT AND TRADEMARK OFFICE
(Docket No. 11-979-WO-US)

In re Application of: Wolfgang Wenger, et al.	)	
	)	**Examiner: TBD**
US Application No: 13/147,416	)	
	)	**Art Unit: 1761**
Filed: August 2, 2011	)	
	)	**Confirmation No.: 3073**
Title: Novel Tricyanoborates	)	

REQUEST FOR RECONSIDERATION OF DISMISSAL OF REQUEST TO PARTICIPATE IN THE PCT PATENT PROSECUTION HIGHWAY AND PETITION TO MAKE SPECIAL UNDER 37 CFR 1.102(a)

Commissioner for Patents
P.O. Box 1450
Alexandria, VA 22313-1450

Dear Sir or Madam:

Applicants respectfully request reconsideration of the dismissal mailed February 27, 2012 of Applicants request to participate in the PCT Patent Prosecution Highway and Petition to Make Special Under 37 CFR 1.102(a) for the above identified patent application.

This application was filed on August 2, 2011, along with a Preliminary Amendment. In the Preliminary Amendment, claims 1, 2, 4, 7, 11 and 13 remained unchanged; claims 3, 5, 6, 8, 9, 14 and 15 were amended to change multiple dependencies to single dependencies; claims 9 and 10 were amended to delete "preferably" clauses; claim 12 was amended from a "use" claim to a "composition" claim; and new claims 16 – 29 were added to cover subject matter that had previously been encompassed by the original multiply dependent claims.

On October 3, 2011, Applicants filed form PTO/SB/20PCT-EP (05-10), "Request for Participation in the Patent Cooperation Treaty – Patent Prosecution Highway (PCT-PPH) Pilot

Program Between the European Patent Office (EPO) and the USPTO." Pages 2-3 of the form included the required Claims Correspondence Table, showing correspondence between the claims of the application as reflected in the preliminary amendment with the claims as presented in the corresponding PCT application.

On February 27, 2012, the Office mailed a Dismissal of the Petition. The Petition listed eight (8) requirements for a grantable request to participate in the PCT-PPH, and stated that the fourth requirement was not met, because the claims as set forth in the Preliminary Amendment submitted on August 2, 2011 did not sufficiently correspond with the claims having novelty, inventive step, and industrial applicability in the PCT application. In particular, US claim 12 was stated to not correspond to EP claim 12 because the category of the claim had changed from "use" to a "composition."

It is Applicants' understanding that the Preliminary Amendment submitted on August 2, 2011 with the original application has not yet been entered. Accordingly, submitted herewith is a Second Preliminary Amendment in which the amendments to the specification and claims are identical to those in the original Preliminary Amendment, except that claim 12 is now cancelled rather than amended. Also submitted herewith is a corrected form for Request for Participation in the PCT-PPH program, which is identical in all respects to the Request submitted on October 3, 2011, except that claim 12 is now indicated as cancelled.

As all requirements for acceptance of the Petition and Request have now been fulfilled, it is respectfully requested that the Petition and Request be granted.

The undersigned applicants' representative acknowledges with appreciation the assistance of Ms. Kimerly Inabinet of the USPTO, who graciously provided guidance as to the proper format for response to the Decision of February 27, 2012.

Respectfully submitted,

Date: March 23, 2012

/Sandra B. Weiss/
Sandra B. Weiss
Registration No. 30,814

McDonnell Boehnen Hulbert & Berghoff LLP
300 South Wacker Drive, Suite 3100
Chicago, IL 60606
Telephone: 312-913-0001
Facsimile: 312-913-0002

PTO/SB/20PCT-EP (05-10)
Approved for use through 01/31/2015. OMB 0651-0058
U.S. Patent and Trademark Office; U.S DEPARTMENT OF COMMERCE
Under the Paperwork Reduction Act of 1995, no persons are required to respond to a collection of information unless it displays a valid OMB control number.

CORRECTED REQUEST FOR PARTICIPATION IN THE PATENT COOPERATION TREATY – PATENT PROSECUTION HIGHWAY (PCT-PPH) PILOT PROGRAM BETWEEN THE EUROPEAN PATENT OFFICE (EPO) AND THE USPTO

Application No.:	13/147,416	First Named Inventor:	Wolfgang Wenger
Filing Date:	August 2, 2011	Attorney Docket No.:	11-979-WO-US
Title of the Invention:	Novel Tricyanoborates		

THIS REQUEST FOR PARTICIPATION IN THE PCT-PPH PILOT PROGRAM ALONG WITH THE REQUIRED DOCUMENTS MUST BE SUBMITTED VIA EFS-WEB. INFORMATION REGARDING EFS-WEB IS AVAILABLE AT HTTP://WWW.USPTO.GOV/EBC/EFS_HELP.HTML.

APPLICANT HEREBY REQUESTS PARTICIPATION IN THE PCT-PPH PILOT PROGRAM AND PETITIONS TO MAKE THE ABOVE-IDENTIFIED APPLICATION SPECIAL UNDER THE PCT-PPH PILOT PROGRAM.

The above-identified application is (1) a national stage entry of the corresponding PCT application, or (2) a national stage entry of another PCT application which claims priority to the corresponding PCT application, or (3) a national application that claims domestic/ foreign priority to the corresponding PCT application, or (4) a national application which forms the basis for the priority claim in the corresponding PCT application, or (5) a continuing application of a U.S. application that satisfies one of (1) to (4) above, or (6) a U.S. application that claims domestic benefit to a U.S. provisional application which forms the basis for the priority claim in the corresponding PCT application.

The corresponding PCT application number(s) is/are: PCT/EP2010/000426

The international filing date of the corresponding PCT application(s) is/are: January 26, 2010

I. List of Required Documents:

a. **A copy of the latest international work product (WO/ISA, WO/IPEA, or IPER) in the above-identified corresponding PCT application(s)**

☐ is attached.

☑ is not attached because the document is already in the U.S. application.

b. **A copy of all claims which were indicated as having novelty, inventive step and industrial applicability in the above-identified corresponding PCT application(s)**

☐ is attached.

☑ is not attached because the document is already in the U.S. application.

c. **English translations of the documents in a. and b. above are attached (if the documents are not in the English language). A statement that the English translation is accurate is attached for the document in b. above.**

d. **(1) An information disclosure statement listing the documents cited in the international work products (ISR, WO/ISA, WO/IPEA, IPER) of the corresponding PCT application.**

☐ is attached.

☑ has already been filed in the above-identified U.S. application on August 2, 2011

(2) Copies of all documents (except for U.S. patents or U.S. patent application publications)

☐ are attached.

☑ have already been filed in the above-identified U.S. application on August 2, 2011

This collection of information is required by 35 U.S.C. 119, 37 CFR 1.55, and 37 CFR 1.102(d). The information is required to obtain or retain a benefit by the public, which is to file (and by the USPTO to process) an application. Confidentiality is governed by 35 U.S.C. 122 and 37 CFR 1.11 and 1.14. This collection is estimated to take 2 hours to complete, including gathering, preparing, and submitting the completed application form to the USPTO. Time will vary depending upon the individual case. Any comments on the amount of time you require to complete this form and/or suggestions for reducing this burden should be sent to the Chief Information Officer, U.S. Patent and Trademark Office, U.S. Department of Commerce, P.O. Box 1450, Alexandria, VA 22313-1450. DO NOT SEND FEES OR COMPLETED FORMS TO THIS ADDRESS.

Under the Paperwork Reduction Act of 1995, no persons are required to respond to a collection of information unless it displays a valid OMB control number.

CORRECTED REQUEST FOR PARTICIPATION IN THE PCT-PPH PILOT PROGRAM BETWEEN THE EPO AND THE USPTO

(continued)

Application No.:	13/147,416	First Named Inventor:	Wolfgang Wenger

II. Claims Correspondence Table:

Claims in US Application	Patentable Claims in the corresponding PCT application	Explanation regarding the correspondence
1	1	Identical
2	2	Identical
3	3	Multiple Dependency Deleted
4	4	Identical
5	5	Multiple Dependency Deleted
6	6	Multiple Dependency Deleted
7	7	Identical
8	8	Multiple Dependency Deleted
9	9	Multiple Dependency Deleted, "Preferably" Clause Deleted
10	10	"Preferably" Clause Deleted
11	11	Identical
12	(none)	U.S. Claim 12 Cancelled
13	13	Identical
14	14	Multiple Dependency Deleted
15	15	Limitation of Claim 13 Added
16	3	Made Singly Dependent
17	4	Made Singly Dependent
18	5	Made Singly Dependent
19	5	Made Singly Dependent
20	5	Made Singly Dependent
21	6	Made Singly Dependent
22	6	Made Singly Dependent

III. All the claims in the US application sufficiently correspond to the patentable claims in the corresponding PCT application.

Signature /Sandra B. Weiss/	Date March 23, 2012
Name (Print/Typed) Sandra B. Weiss	Registration Number 30,814

II. Claims Correspondence Table: (cont'd)

Claims In US Application	Patentable Claims in the corresponding PCT Application	Explanation regarding the Correspondence
23	6	Made Singly Dependent
24	2,6,7	Made Singly Dependent
25	3,6,7	Made Singly Dependent
26	4,6,7	Made Singly Dependent
27	7,8	Made Singly Dependent
28	7,9	Made Singly Dependent
29	8,9	Made Singly Dependent

Privacy Act Statement

The **Privacy Act of 1974 (P.L. 93-579)** requires that you be given certain information in connection with your submission of the attached form related to a patent application or patent. Accordingly, pursuant to the requirements of the Act, please be advised that: (1) the general authority for the collection of this information is 35 U.S.C. 2(b)(2); (2) furnishing of the information solicited is voluntary; and (3) the principal purpose for which the information is used by the U.S. Patent and Trademark Office is to process and/or examine your submission related to a patent application or patent. If you do not furnish the requested information, the U.S. Patent and Trademark Office may not be able to process and/or examine your submission, which may result in termination of proceedings or abandonment of the application or expiration of the patent.

The information provided by you in this form will be subject to the following routine uses:

1. The information on this form will be treated confidentially to the extent allowed under the Freedom of Information Act (5 U.S.C. 552) and the Privacy Act (5 U.S.C 552a). Records from this system of records may be disclosed to the Department of Justice to determine whether disclosure of these records is required by the Freedom of Information Act.
2. A record from this system of records may be disclosed, as a routine use, in the course of presenting evidence to a court, magistrate, or administrative tribunal, including disclosures to opposing counsel in the course of settlement negotiations.
3. A record in this system of records may be disclosed, as a routine use, to a Member of Congress submitting a request involving an individual, to whom the record pertains, when the individual has requested assistance from the Member with respect to the subject matter of the record.
4. A record in this system of records may be disclosed, as a routine use, to a contractor of the Agency having need for the information in order to perform a contract. Recipients of information shall be required to comply with the requirements of the Privacy Act of 1974, as amended, pursuant to 5 U.S.C. 552a(m).
5. A record related to an International Application filed under the Patent Cooperation Treaty in this system of records may be disclosed, as a routine use, to the International Bureau of the World Intellectual Property Organization, pursuant to the Patent Cooperation Treaty.
6. A record in this system of records may be disclosed, as a routine use, to another federal agency for purposes of National Security review (35 U.S.C. 181) and for review pursuant to the Atomic Energy Act (42 U.S.C. 218(c)).
7. A record from this system of records may be disclosed, as a routine use, to the Administrator, General Services, or his/her designee, during an inspection of records conducted by GSA as part of that agency's responsibility to recommend improvements in records management practices and programs, under authority of 44 U.S.C. 2904 and 2906. Such disclosure shall be made in accordance with the GSA regulations governing inspection of records for this purpose, and any other relevant (*i.e.*, GSA or Commerce) directive. Such disclosure shall not be used to make determinations about individuals.
8. A record from this system of records may be disclosed, as a routine use, to the public after either publication of the application pursuant to 35 U.S.C. 122(b) or issuance of a patent pursuant to 35 U.S.C. 151. Further, a record may be disclosed, subject to the limitations of 37 CFR 1.14, as a routine use, to the public if the record was filed in an application which became abandoned or in which the proceedings were terminated and which application is referenced by either a published application, an application open to public inspection or an issued patent.
9. A record from this system of records may be disclosed, as a routine use, to a Federal, State, or local law enforcement agency, if the USPTO becomes aware of a violation or potential violation of law or regulation.

UNITED STATES PATENT AND TRADEMARK OFFICE

Commissioner for Patents
United States Patent and Trademark Office
P.O. Box 1450
Alexandria, VA 22313-1450
www.uspto.gov

MCDONNELL BOEHNEN HULBERT
& BERGHOFF LLP
300 S. WACKER DRIVE
32ND FLOOR
CHICAGO IL 60606

MAILED
MAR 30 2012
OFFICE OF PETITIONS

In re Application of	**: DECISION ON REQUEST TO**
Wolfgang Wenger et al.	**: PARTICIPATE IN THE PATENT**
Application No.: 13/147,416	**: PROSECUTION HIGHWAY**
Filed: August 2, 2011	**: PROGRAM AND PETITION**
Attorney Docket No.: 11-979-WO-US	**: TO MAKE SPECIAL UNDER**
For: Novel Tricyanoborates	**: 37 CFR 1.102(a)**

This is a decision on the renewed request to participate in the PCT Patent Prosecution Highway (PCT-PPH) pilot program and the petition under 37 CFR 1.102(a), filed on March 23, 2012, to make the above-identified application special.

The request and petition are **GRANTED**.

Discussion

A grantable request to participate in the PCT-PPH pilot program and petition to make special require:

1) The U.S. application must have an eligible relationship to one or more PCT applications where the ISA or IPEA are Australia, Austria, China, EPO, Finland, JPO, Korea, NPI, Russia, Spain, Sweden and the USPTO;

(2) At least one claim in the PCT application has novelty, inventive step, and industrial applicability and must be free of any observations in Box VIII in the latest work product in the international stage or applicant must identify and explain why the claim(s) is/are not subject to the observation in Box VIII;

(3) Applicant must submit a copy of the claim(s) from the PCT application(s) that have novelty, inventive step, and industrial applicability along with an English translation thereof and a statement that the English translation is accurate, if the claims are not in the English language;

(4) All the claims in the U.S. application must sufficiently correspond or be amended to sufficiently correspond to the claim(s) that have novelty, inventive step, and industrial applicability in the PCT application(s);

(5) Examination of the U.S. application has not begun;

(6) Applicant must submit a copy of the latest international work product from the PCT application indicating that the claim(s) have novelty, inventive step, and industrial applicability along with an English translation thereof and a statement that the English translation is accurate if the latest international work product is not in the English language;

(7) Applicant must submit an IDS listing the documents cited by the PCT examiner in the international work product along with copies of documents except U.S. patents or U.S. patent application publications.

The request to participate in the PCT-PPH pilot program and petition comply with the above requirements. Accordingly, the above-identified application has been accorded "special" status.

Telephone inquiries concerning this decision should be directed to Kimberly Inabinet at 571-272-4618.

All other inquiries concerning the examination or status of the application is accessible in the PAIR system at http://www.uspto.gov/ebc.index.html.

This application will be forwarded to the examiner for action on the merits commensurate with this decision.

Thurman K. Page
Petitions Examiner
Office of Petitions

UNITED STATES PATENT AND TRADEMARK OFFICE

Commissioner for Patents
United States Patent and Trademark Office
P.O. Box 1450
Alexandria, VA 22313-1450
www.uspto.gov

SALIWANCHIK, LLOYD & EISENSCHENK
A PROFESSIONAL ASSOCIATION
PO Box 142950
GAINESVILLE FL 32614

MAILED
NOV 22 2011
PCT LEGAL ADMINISTRATION

In re Application of	:	
MONTAGNE et al.	:	
Application No.: 13/147,449	:	
PCT No.: PCT/EP2010/051373	:	DECISION
Int. Filing Date: 04 February 2010	:	
Priority Date: 12 February 2009	:	
Attorney's Docket No.: SER.175	:	
For: 2-MORPHOLINO-PYRIDO[3,2-D]PYRIMIDINES	:	

This decision is in response to applicants' petition filed 13 October 2011 to change the name of inventor Gwenaelle DESFORGES to Gwenaelle DESFORGES-BOUSCARY in the USPTO records, which has properly been treated as a petition under 37 CFR 1.182.

BACKGROUND

On 04 February 2010, applicants filed international application PCT/EP2010/051373 which designated the U.S. and claimed a priority date of 12 February 2009. The thirty-month period for paying the basic national fee in the United States expired at midnight on 12 August 2011.

On 02 August 2011, applicants filed a transmittal letter for entry into the national stage in the United States, which was accompanied by, *inter alia*, the Basic National Fee and a copy of the declaration of inventors filed under PCT Rule 4.17(iv) in the international phase.

On 02 March 2011, the United States Designated/Elected Office (DO/EO/US) issued a NOTICE OF ACCEPTANCE OF APPLICATION UNDER 35 U.S.C. 371 AND 37 CFR 1.495 (Form PCT/DO/EO/903) according the application a 35 U.S.C. 371(c)(1), (c)(2), and (c)(4) date of 02 August 2011 and a 35 U.S.C. 371 date of 12 August 2011.

On 02 March 2011, the DO/EO/US also mailed a Filing Receipt.

On 13 October 2011, applicants filed the instant petition under 37 CFR 1.182 to change the name of inventor Gwenaelle DESFORGES to Gwenaelle DESFORGES-BOUSCARY in the USPTO records.

DISCUSSION

In instances where an inventor has changed his or her name after the application has been filed, a petition under 37 CFR 1.182 must be submitted. The petition must include (1) the appropriate petition fee and (2) a statement signed by the inventor setting forth both names and the procedure whereby the change of name was effected, or a certified copy of the court order. MPEP § 605.04(c).

As to item (1), the petition fee has been paid.

With regard to item (2), the statement of Gwenaelle DESFORGES is a statement setting forth both names (Gwenaelle DESFORGES and Gwenaelle DESFORGES-BOUSCARY) and the procedure (marriage) whereby the change of name was effected. This statement is accepted. The inventor's name will be changed accordingly in the USPTO records.

CONCLUSION

For the reasons set forth above, the petition under 37 CFR 1.182 is **GRANTED**.

/Daniel Stemmer/

Daniel Stemmer
Legal Examiner
PCT Legal Affairs
Office of Patent Cooperation Treaty
Legal Administration
Telephone: (571) 272-3301

UNITED STATES PATENT AND TRADEMARK OFFICE

UNITED STATES DEPARTMENT OF COMMERCE
United States Patent and Trademark Office
Address: COMMISSIONER FOR PATENTS
P.O. Box 1450
Alexandria, Virginia 22313-1450
www.uspto.gov

APPLICATION NO.	FILING DATE	FIRST NAMED INVENTOR	ATTORNEY DOCKET NO.	CONFIRMATION NO.
13/147,493	08/02/2011	Satoshi Hamatani	Q125695	3669

23373 7590 10/18/2011
SUGHRUE MION, PLLC
2100 PENNSYLVANIA AVENUE, N.W.
SUITE 800
WASHINGTON, DC 20037

EXAMINER

ART UNIT	PAPER NUMBER
2123	

NOTIFICATION DATE	DELIVERY MODE
10/18/2011	ELECTRONIC

Please find below and/or attached an Office communication concerning this application or proceeding.

The time period for reply, if any, is set in the attached communication.

Notice of the Office communication was sent electronically on above-indicated "Notification Date" to the following e-mail address(es):

USPTO@sughrue.com
sughrue@sughrue.com
PPROCESSING@SUGHRUE.COM

UNITED STATES PATENT AND TRADEMARK OFFICE

Commissioner for Patents
United States Patent and Trademark Office
P.O. Box 1450
Alexandria, VA 22313-1450
www.uspto.gov

SUGHRUE MION, PLLC
2100 PENNSYLVANIA AVENUE, N.W.
SUITE 800
WASHINGTON DC 20037

In re Application of:
HAMATANI, Satoshi et al.
Application No. 13/147,493
Filed: August 2, 2011
For: **DEVICE FOR PREDICTING DEFORMATION BEHAVIOR OF RUBBER MATERIAL AND METHOD FOR PREDICTING DEFORMATION BEHAVIOR OF RUBBER MATERIAL**

DECISION ON PETITION UNDER 37 C.F.R. § 1.84(a)(2) TO ACCEPT COLOR DRAWINGS

This is a decision on the petition under 37 C.F.R. § 1.84(a)(2), filed on August 2, 2011, requesting acceptance of color drawings.

The petition requests that the color drawings of Figures 5 and 8 be accepted in lieu of black and white drawings.

A grantable petition under 37 C.F.R. § 1.84(a)(2) must be accompanied by a fee set forth under 37 C.F.R. § 1.17(h), 3 (three) sets of the color drawings in question, and the specification must contain, or be amended to contain, the following language as the first paragraph in that portion of the specification relating to the brief description of the drawings:

"The patent or application file contains at least one drawing executed in color. Copies of this patent or patent application publication with color drawings will be provided by the U.S. Patent and Trademark Office upon request and payment of the necessary fee."

The petition was filed with the required fee and was filed with one (1) set of color drawings (Figures 5 and 8) via EFS-Web, which is acceptable. The amendment filed August 2, 2011 to the specification contains the required notification described above.

Accordingly, the petition is **GRANTED**.

Any inquiry regarding this decision should be directed to Eddie C. Lee at (571) 272-1732.

/Eddie C. Lee/

Eddie C. Lee
Quality Assurance Specialist, TC 2100

UNITED STATES PATENT and TRADEMARK OFFICE

COMMISSIONER FOR PATENTS
UNITED STATES PATENT AND TRADEMARK OFFICE
P.O BOX 1450
ALEXANDRIA, VA 22313-1450
www.uspto.gov

Clements Bernard PLLC
1901 Roxborough Road. Suite 250
Charlotte, NC 28211

In re Application of	:	DECISION ON
CUEMAN et al	:	
Application No.: 13/147,499	:	
PCT No.: PCT/US2009/61694	:	
Filing Date: 22 October 2009	:	PETITION UNDER
Priority Date: 22 October 2008	:	
Attorney's Docket No.: 4937	:	
For: Reusable Water Filter Systems and Methods	:	37 CFR 1.137(b)

MAILED
AUG 30 2011
PCT LEGAL ADMINISTRATION

This decision is in response to applicants' "Petition For Revival Of An International Application For Patent Designating the U.S. Abandoned Unintentionally Under 37 CFR 1.137(b)," filed 2 August 2011.

BACKGROUND

On 22 October 2009, this international application was filed, claiming an earliest priority date of 22 October 2008.

The deadline for paying the basic national fee in the United States under 35 U.S.C. 371 and 37 CFR 1.495 was 22 April 2011. This international application became abandoned with respect to the United States at midnight on 22 April 2011 for failure to pay the required basic national fee.

On 2 August 2011, applicant filed in the United States Patent and Trademark Office (PTO) via EFS-web entry into the national stage in the U.S. under 35 U.S.C. 371, which was accompanied by, *inter alia*, the national basic fee, small entity petition fee, and a petition under 37 CFR 1.137(b).

On 2 August 2011, applicant also filed preliminary amendments and an executed Declaration.

DISCUSSION

A grantable petition to revive an abandoned application under 37 CFR 1.137(b) must be accompanied by (1) the required reply, unless previously filed. In a nonprovisional application abandoned for failure to prosecute, the required reply may be met by the filing of a continuing application; (2) the petition fee as set forth in § 1.17(m); and (3) a statement that the entire delay in filing the required reply from the due date for the reply until the filing of a grantable petition pursuant to this paragraph was unintentional. The Commissioner may require additional information where there is a question whether the delay was unintentional; and (4) any terminal disclaimer (and fee as set forth in § 1.20 (d)) required pursuant to paragraph (c) of this section.

Petitioner has provided: (1) the proper reply by submitting the basic national filing fee, (2) the petition fee set forth in §1.17(m) and (3) the proper statement under 137(b)(3). In this application, no terminal disclaimer is required.

Accordingly, the petition is deemed to satisfy requirements (1), (2), (3), and (4) under 37 CFR 1.137(b).

DECISION

The petition under 37 CFR 1.137(b) is **GRANTED**.

This application is being returned to the United States Designated/Elected Office (DO/EO/US) for continued processing.

Rafael Bacares
PCT Legal Examiner
PCT Legal Office
Telephone: (571) 272-3276
Facsimile: (571) 273-0459

Jacquelyn Prather

UNITED STATES PATENT AND TRADEMARK OFFICE

Commissioner for Patents
United States Patent and Trademark Office
P.O. Box 1450
Alexandria, VA 22313-1450
www.uspto.gov

MAILED

OCT 04 2011

PCT LEGAL ADMINISTRATION

NOVOZYMES NORTH AMERICA, INC.
500 FIFTH AVENUE
SUITE 1600
NEW YORK NY 10110

In re Application of LI et al.	:	
Application No.: 13/147,513	:	DECISION ON
PCT No.: PCT/US09/69772	:	
Int. Filing: 30 December 2009	:	PETITION TO REVIVE
Priority Date: 30 December 2008	:	
Attorney Docket No.: 11443-US-PCT	:	UNDER 37 CFR 1.137(b)
For: IMPROVEMENT OF ENZYMATIC HYDROLYSIS	:	
OF PRE-TREATED LIGNOCELLULOSE-CONTAINING	:	
MATERIAL WITH DISSOLVED AIR FLOTATION SLUDGE		

The petition to revive under 37 CFR 1.137(b) filed 02 August 2011 in the above captioned application is hereby **GRANTED** as follows:

Applicant's statement that "the entire delay in filing the required reply from the due date for the required reply until the filing of a grantable petition under 37 CFR 1.137(b) was unintentional" satisfies the requirement of 37 CFR 1.137(b)(3). The petition fee of $1620 was paid. The basic national fee was paid

Applicant submitted a declaration executed by the joint inventors which is in compliance with 37 CFR 1.497(a) and (b). The $130 surcharge for filing the declaration after the thirty month period was also paid.

This application is being referred to the National Stage Processing Branch of the Office of PCT Operations for further processing. The 35 U.S.C. 371(c)(1), (c)(2) and (c)(4) date is 02 August 2011.

/Cynthia M. Kratz/
Cynthia M. Kratz
Attorney Advisor
PCT Legal Office
Office of PCT Legal Administration
Telephone: (571) 272-3286

UNITED STATES PATENT and TRADEMARK OFFICE

COMMISSIONER FOR PATENTS
UNITED STATES PATENT AND TRADEMARK OFFICE
P.O BOX 1450
ALEXANDRIA, VA 22313-1450
www.uspto.gov

Scully, Scott, Murphy & Presser, P.C.
400 Garden City Plaza
Suite 300
Garden City, NY 11530

MAILED
AUG 30 2011
PCT LEGAL ADMINISTRATION

In re Application of	:	DECISION ON
LUO :	:	
Application No.: 13/147,546	:	
PCT No.: PCT/CN2009/074203	:	
Filing Date: 24 September 2009	:	PETITION UNDER
Priority Date: 15 December 2008	:	
Attorney's Docket No.: 27914	:	
For: Method For Improving Call Success Rate And	:	
Base Station System Thereof	:	37 CFR 1.137(b)

This decision is in response to applicants' "Petition For Revival Of An Application For Patent Abandoned Unintentionally Under 37 CFR 1.137(b)," filed 02 August 2011.

BACKGROUND

On 24 September 2009, this international application was filed, claiming an earliest priority date of 15 December 2008.

The deadline for paying the basic national fee in the United States under 35 U.S.C. 371 and 37 CFR 1.495 was 15 June 2011. This international application became abandoned with respect to the United States at midnight on 15 June 2011 for failure to pay the required basic national fee.

On 02 August 2011, applicant filed in the United States Patent and Trademark Office (PTO) a transmittal letter for entry into the national stage in the U.S. under 35 U.S.C. 371, which was accompanied by, *inter alia*, the national basic fee, petition fee, and a petition under 37 CFR 1.137(b), and an executed declaration.

DISCUSSION

A grantable petition to revive an abandoned application under 37 CFR 1.137(b) must be accompanied by (1) the required reply, unless previously filed. In a nonprovisional application abandoned for failure to prosecute, the required reply may be met by the filing of a continuing application; (2) the petition fee as set forth in § 1.17(m); and (3) a statement that the entire delay in filing the required reply from the due date for the reply until the filing of a grantable petition pursuant to this paragraph was unintentional. The Commissioner may require additional information where there is a question whether the delay was unintentional; and (4) any terminal disclaimer (and fee as set forth in § 1.20 (d)) required pursuant to paragraph (c) of this section.

Petitioner has provided: (1) the proper reply by submitting the basic national filing fee, (2) the petition fee set forth in §1.17(m) and (3) the proper statement under 137(b)(3). In this application, no terminal disclaimer is required.

Accordingly, the petition is deemed to satisfy requirements (1), (2), (3), and (4) under 37 CFR 1.137(b).

DECISION

The petition under 37 CFR 1.137(b) is **GRANTED**.

This application is being returned to the United States Designated/Elected Office (DO/EO/US) for continued processing.

Rafael Bacares
PCT Legal Examiner
PCT Legal Office
Telephone: (571) 272-3276
Facsimile: (571) 273-0459

Stephany Shockley, Ph.D.

UNITED STATES PATENT AND TRADEMARK OFFICE

Commissioner for Patents
United States Patent and Trademark Office
P.O. Box 1450
Alexandria, VA 22313-1450
www.uspto.gov

MAILED
APR 09 2012
OFFICE OF PETITIONS

BIRCH STEWART
KOLASCH & BIRCH
P.O. BOX 747
FALLS CHURCH VA 22040-0747

In re Application of	**: DECISION ON REQUEST TO**
Yasuhiro Hamaguchi et al	**: PARTICIPATE IN THE PATENT**
Application No.: 13/147,553	**: PROSECUTION HIGHWAY**
Filed: September 22, 2011	**: PROGRAM AND PETITION**
Attorney Docket No.: 5132-0181PUS1	**: TO MAKE SPECIAL UNDER**
For: WIRELESS COMMUNICATION SYSTEM, BASE STATION APPARATUS, MOBILE STATION APPARATUR, AND COMMUNICATION METHOD	**: 37 CFR 1.102(a)**

This is a decision on the request to participate in the Patent Prosecution Highway (PPH) program and the petition under 37 CFR 1.102(a), filed December 29, 2011, to make the above-identified application special.

The request and petition are **DENIED**.

Discussion

A grantable request to participate in the PPH pilot program and petition to make special require:

1. The U.S. application is
    a. a Paris Convention application which either
        i. validly claims priority under 35 U.S.C. 119(a) and 37 CFR 1.55 to one or more applications filed in the JPO, or
        ii. validly claims priority to a PCT application that contains no priority claims, or
    b. a national stage application under the PCT (an application which entered the national stage in the U.S. from a PCT international application after compliance with 35 U.S.C. 371), which PCT application
        i. validly claims priority to an application filed in the JPO, or
        ii. validly claims priority to a PCT application that contains no priority claims, or
        iii. contains no priority claim, or
    c. a so-called bypass application filed under 35 U.S.C. 111(a) which validly claims benefit under 35 U.S.C. 120 to a PCT application, which PCT application
        i. validly claims priority to an application filed in the JPO, or

ii. validly claims priority to a PCT application that contains no priority claims, or
iii. contains no priority claim;

2. Applicant must submit a copy of:
   a. The allowable/patentable claim(s) from the JPO application(s);
   b. An English translation of the allowable/patentable claim(s) and
   c. A statement that the English translation is accurate;
3. Applicant must:
   a. Ensure all the claims in the U.S. application must sufficiently correspond or be amended to sufficiently correspond to the allowable/patentable claim(s) in the JPO application(s) and
   b. Submit a claims correspondence table in English;
4. Examination of the U.S. application has <u>not</u> begun;
5. Applicant must submit:
   a. Documentation of prior office action:
      i. a copy of the office action(s) just prior to the "Decision to Grant a Patent" from each of the JPO application(s) containing the allowable/patentable claim(s) or
      ii. if the allowable/patentable claims(s) are from a "Notification of Reasons for Refusal" then the Notification of Reasons for Refusal or
      iii. if the JPO application is a first action allowance then no office action from the JPO is necessary should be indicated on the request/petition form;
   b. An English language translation of the JPO Office action from (5)(a)(i)-(ii) above
   c. A statement that the English translation is accurate;
6. Applicant must submit:
   a. An IDS listing the documents cited by the JPO examiner in the JPO office action (unless already submitted in this application)
   b. Copies of the documents except U.S. patents or U.S. patent application publications (unless already submitted in this application);

However, the request to participate in the PPH pilot program and petition fail to meet requirement (4).

Regarding the requirement of condition (4), a non-final action was issued for this application on March 15, 2012.

Telephone inquiries concerning this decision should be directed to Irvin Dingle at (571) 272-3210.

All other inquiries concerning the examination or status of the application is accessible in the PAIR system at http://www.uspto.gov/ebc.index.html.

Anthony Knight
Director
Office of Petitions

UNITED STATES PATENT AND TRADEMARK OFFICE

Commissioner for Patents
United States Patent and Trademark Office
P.O. Box 1450
Alexandria, VA 22313-1450
www.uspto.gov

MAILED

NOV 10 2011

PCT LEGAL ADMINISTRATION

REN-SHENG INTERNATIONAL IP MANAGEMENT LTD.
GENE I. SU
7F, NO. 57, SEC. 2, DUN HUA S. ROAD
TAIPEI 106 TW TAIWAN

In re Application of: ZHANG, Xinggong, et al. :
U.S. Application No.: 13/147,594 :
PCT Application No.: PCT/CN2010/075057 :
International Filing Date: 08 July 2010 :
Priority Date: 08 July 2010 :
Attorney's Docket No.: 130-0030-US-NAT :
For: DATA TRANSMISSION IN MOBILE AD-HOC NETWROK :

DECISION ON PETITION UNDER 37 CFR 1.182

This decision is issued in response to the "Petition Under 37 CFR 1.182" filed on 29 September 2011. Applicants have paid the required petition fee.

BACKGROUND

On 11 October 2011, this Office mailed a communication indicating that a petition under 37 CFR 1.182 was required to clarify the record as to the correct international application number for the present national stage application. The notification indicated that the original application submission on 03 August 2011 referenced two different international applications, specifically, PCT/US2010/075057 and PCT/CN2010/075057.

On 21 October 2011, applicants filed the petition under 37 CFR 1.182 considered herein.

DISCUSSION

The petition filed on 21 October 2011 confirms that the correct international application number for the present national stage application is PCT/CN2010/075057. The petition notes that the correct international application number was present in the initial application materials filed on 25 July 2011 (e.g., in the ADS). In addition, the petition was accompanied by the required petition fee.

Applicants' 21 October 2011 submission satisfies the requirements for a grantable petition under 37 CFR 1.182 to correct the inconsistency in the international application numbers referenced in applicants' 25 July 2011 filing. Accordingly, the application materials filed on 03 August 2011 will be treated as directed to international application PCT/CN2010/075057. Such materials, including payment of the U.S. basic national fee, were filed prior to the expiration of thirty months from the priority date of PCT/CN2010/075057.

CONCLUSION

The petition under 37 CFR 1.182 is **GRANTED**.

The present application will be treated as the U.S. national stage under 35 U.S.C. 371 of PCT/CN2010/075057.

The application is being referred to the National Stage Processing Branch of the Office of PCT Operations for further processing in accordance with this decision.

/RichardMRoss/

Richard M. Ross
Attorney Advisor
Office of PCT Legal Administration
Telephone: (571) 272-3296

PTO/SB/20PCT-EP (05-10)
Approved for use through 01/31/2012. OMB 0651-0058
U.S. Patent and Trademark Office; U. S. DEPARTMENT OF COMMERCE
Under the Paperwork Reduction Act of 1995, no persons are required to respond to a collection of information unless it displays a valid OMB control number.

REQUEST FOR PARTICIPATION IN THE PATENT COOPERATION TREATY - PATENT PROSECUTION HIGHWAY (PCT-PPH) PILOT PROGRAM BETWEEN THE EUROPEAN PATENT OFFICE (EPO) AND THE USPTO

Application No:	Not Yet Assigned	Filing date:	August 3, 2011
First Named Inventor:	Shaul Shohat		
Title of the Invention:	Expandable Joint Implant		

THIS REQUEST FOR PARTICIPATION IN THE PCT-PPH PILOT PROGRAM ALONG WITH THE REQUIRED DOCUMENTS MUST BE SUBMITTED VIA EFS-WEB. INFORMATION REGARDING EFS-WEB IS AVAILABLE AT HTTP://WWW.USPTO.GOV/EBC/EFS_HELP.HTML

APPLICANT HEREBY REQUESTS PARTICIPATION IN THE PCT-PPH PROGRAM AND PETITIONS TO MAKE THE ABOVE-IDENTIFIED APPLICATION SPECIAL UNDER THE PCT-PPH PROGRAM.

The above-identified application is (1) a national stage entry of the corresponding PCT application, or (2) a national stage entry of another PCT application which claims priority to the corresponding PCT application, or (3) a national application that claims domestic/ foreign priority to the corresponding PCT application, or (4) a national application which forms the basis for the priority claim in the corresponding PCT application, or (5) a continuing application of a U.S. application that satisfies one of (1) to (4) above, or (6) a U.S. application that claims domestic benefit to a U.S. provisional application which forms the basis for the priority claim in the corresponding PCT application.

The corresponding PCT application number(s) is/are: PCT/IB2010/050562

The international filing date of the corresponding PCT application(s) is/are: February 8, 2010

I. List of Required Documents:

a. **A copy of the latest international work product (WO/ISA, WO/IPEA, or IPER) in the above–identified corresponding PCT application(s)**

- [x] Is attached
- [ ] Is not attached because the document is already in the U.S. application.

b. **A copy of all claims which were indicated as having novelty, inventive step and industrial applicability in the above-identified corresponding PCT application(s).**

- [x] Is attached.
- [ ] Is not attached because the document is already in the U.S. application.

c. **English translations of the documents in a. and b. above are attached (if the documents are not in the English language). A statement that the English translation is accurate is attached for the document in b. above.**

This collection of information is required by 35 U.S.C. 119, 37 CFR 1.55, and 37 CFR 1.102(d). The information is required to obtain or retain a benefit by the public, which is to file (and by the USPTO to process) an application. Confidentiality is governed by 35 U.S.C. 122 and 37 CFR 1.11 and 1.14. This collection is estimated to take 2 hours to complete, including gathering, preparing, and submitting the completed application form to the USPTO. Time will vary depending upon the individual case. Any comments on the amount of time you require to complete this form and/or suggestions for reducing this burden should be sent to the Chief Information Officer, U.S. Patent and Trademark Office, U.S. Department of Commerce, P.O. Box 1450, Alexandria, VA 22313-1450. DO NOT SEND FEES OR COMPLETED FORMS TO THIS ADDRESS.

Approved for use through 01/31/2012. OMB 0651-0058
U.S.Patent and Trademark Office; U.S. DEPARTMENT OF COMMERCE

Under the Paperwork Reduction Act of 1995, no persons are required to respond to a collection of information unless it displays a valid OMB control number.

REQUEST FOR PARTICIPATION IN THE PCT-PPH PILOT PROGRAM BETWEEN THE EPO AND THE USPTO

(continued)

Application No.:	Not Yet Assigned
First Named Inventor:	Shaul Shohat

d. **(1) An information disclosure statement listing the documents cited in the international work products (ISR, WO/ISA, WO/IPEA, IPER) of the corresponding PCT application.**

- [x] Is attached
- [ ] Has already been filed in the above-identified U.S. application on _____

(2) Copies of all documents (except) for U.S. patents or U.S. patent application publications)

- [x] Are attached.
- [ ] Have already been filed in the above-identified U.S. application on _____

II. Claims Correspondence Table:

Claims in US Application	Patentable Claims in the corresponding PCT Application	Explanation regarding the correspondence
1 - 2	1 - 2	Same exact claims
3 - 4	3 - 4	Removed multiple dependency
5	5	Same exact claim
6 - 10	6 - 10	Removed multiple dependency
11 - 12	11 - 12	Same exact claims
13 - 18	13 - 18	Removed multiple dependency
19 - 20	19 - 20	Same exact claims
21-23	21-23	Removed multiple dependency
24	24	Same exact claim
25	25	Removed multiple dependency
26	26	Same exact claim
27 - 31	27 - 31	Removed multiple dependency

III. All the claims in the US application sufficiently correspond to the patentable claims in the corresponding PCT application.

Signature /Danielle T. Abramson/	Date August 3, 2011
Name (Print/Typed) Danielle T. Abramson	Registration Number 52,539

PTO/SB/20PCT-SE (06-11)
Approved for use through 01/31/2012. OMB 0651-0058
U.S. Patent and Trademark Office; U. S. DEPARTMENT OF COMMERCE
Under the Paperwork Reduction Act of 1995, no persons are required to respond to a collection of information unless it displays a valid OMB control number.

REQUEST FOR PARTICIPATION IN THE PATENT COOPERATION TREATY - PATENT PROSECUTION HIGHWAY (PCT-PPH) PILOT PROGRAM BETWEEN THE SWEDISH PATENT AND REGISTRATION OFFICE (PRV) AND THE USPTO

Application No:	13/147,720	Filing date:	August 3, 2011
First Named Inventor:	Karl-Johan Engdahl		
Title of the Invention:	A FLUID CONTAINER CARRYING DEVICE AND A NECK PROTECTION DEVICE PROVIDED WITH SU		

THIS REQUEST FOR PARTICIPATION IN THE PCT-PPH PILOT PROGRAM ALONG WITH THE REQUIRED DOCUMENTS MUST BE SUBMITTED VIA EFS-WEB. INFORMATION REGARDING EFS-WEB IS AVAILABLE AT HTTP://WWW.USPTO.GOV/EBC/EFS_HELP.HTML

APPLICANT HEREBY REQUESTS PARTICIPATION IN THE PCT-PPH PROGRAM AND PETITIONS TO MAKE THE ABOVE-IDENTIFIED APPLICATION SPECIAL UNDER THE PCT-PPH PROGRAM.

The above-identified application is (1) a national stage entry of the corresponding PCT application, or (2) a national stage entry of another PCT application which claims priority to the corresponding PCT application, or (3) a national application that claims domestic/ foreign priority to the corresponding PCT application, or (4) a national application which forms the basis for the priority claim in the corresponding PCT application, or (5) a continuing application of a U.S. application that satisfies one of (1) to (4) above, or (6) a U.S. application that claims domestic benefit to a U.S. provisional application which forms the basis for the priority claim in the corresponding PCT application.

The corresponding PCT application number(s) is/are: PCT/SE2009/050113

The international filing date of the corresponding PCT application(s) is/are: February 4, 2009

I. List of Required Documents:

a. **A copy of the latest international work product (WO/ISA, WO/IPEA, or IPER) in the above–identified corresponding PCT application(s)**

- [✔] Is attached.
- [ ] Is not attached because the document is already in the U.S. application.

b. **A copy of all claims which were indicated as having novelty, inventive step and industrial applicability in the above-identified corresponding PCT application(s).**

- [ ] Is attached.
- [✔] Is not attached because the document is already in the U.S. application.

c. **English translations of the documents in a. and b. above are attached (if the documents are not in the English language). A statement that the English translation is accurate is attached for the document in b. above.**

This collection of information is required by 35 U.S.C. 119, 37 CFR 1.55, and 37 CFR 1.102(d). The information is required to obtain or retain a benefit by the public, which is to file (and by the USPTO to process) an application. Confidentiality is governed by 35 U.S.C. 122 and 37 CFR 1.11 and 1.14. This collection is estimated to take 2 hours to complete, including gathering, preparing, and submitting the completed application form to the USPTO. Time will vary depending upon the individual case. Any comments on the amount of time you require to complete this form and/or suggestions for reducing this burden should be sent to the Chief Information Officer, U.S. Patent and Trademark Office, U.S. Department of Commerce, P.O. Box 1450, Alexandria, VA 22313-1450. DO NOT SEND FEES OR COMPLETED FORMS TO THIS ADDRESS.

Under the Paperwork Reduction Act of 1995, no persons are required to respond to a collection of information unless it displays a valid OMB control number.

REQUEST FOR PARTICIPATION IN THE PCT-PPH PILOT PROGRAM BETWEEN THE PRV AND THE USPTO

(continued)

Application No.:	13/147,720
First Named Inventor:	Karl-Johan Engdahl

d. **(1) An information disclosure statement listing the documents cited in the international work products (ISR, WO/ISA, WO/IPEA, IPER) of the corresponding PCT application.**

☐ Is attached

☑ Has already been filed in the above-identified U.S. application on September 27, 2011

(2) Copies of all documents (except) for U.S. patents or U.S. patent application publications)

☐ Are attached.

☑ Have already been filed in the above-identified U.S. application on September 27, 2011

II. Claims Correspondence Table:

Claims in US Application	Patentable Claims in the corresponding PCT Application	Explanation regarding the correspondence
1	1	Amended to remove reference numbers
2	2	Amended to remove reference numbers
3	3	Amended to remove reference numbers
4	4	Amended to remove multiple dependencies and reference numbe
5	5	Amended to remove multiple dependencies and reference numbe
6	6	Amended to remove multiple dependencies and reference numbe
7	7	Amended to remove multiple dependencies and reference numbe
8	8	Amended to remove multiple dependencies and reference numbe
9	9	Amended to remove reference numbers
10	10	Amended to remove multiple dependencies and reference numbe
11	11	Amended to remove multiple dependencies and reference numbe

III. All the claims in the US application sufficiently correspond to the patentable claims in the corresponding PCT application.

Signature /John E. Nemazi/	Date 11/1/11
Name (Print/Typed) John E. Nemazi	Registration Number 30876

Privacy Act Statement

The **Privacy Act of 1974 (P.L. 93-579)** requires that you be given certain information in connection with your submission of the attached form related to a patent application or patent. Accordingly, pursuant to the requirements of the Act, please be advised that: (1) the general authority for the collection of this information is 35 U.S.C. 2(b)(2); (2) furnishing of the information solicited is voluntary; and (3) the principal purpose for which the information is used by the U.S. Patent and Trademark Office is to process and/or examine your submission related to a patent application or patent. If you do not furnish the requested information, the U.S. Patent and Trademark Office may not be able to process and/or examine your submission, which may result in termination of proceedings or abandonment of the application or expiration of the patent.

The information provided by you in this form will be subject to the following routine uses:

1. The information on this form will be treated confidentially to the extent allowed under the Freedom of Information Act (5 U.S.C. 552) and the Privacy Act (5 U.S.C 552a). Records from this system of records may be disclosed to the Department of Justice to determine whether disclosure of these records is required by the Freedom of Information Act.
2. A record from this system of records may be disclosed, as a routine use, in the course of presenting evidence to a court, magistrate, or administrative tribunal, including disclosures to opposing counsel in the course of settlement negotiations.
3. A record in this system of records may be disclosed, as a routine use, to a Member of Congress submitting a request involving an individual, to whom the record pertains, when the individual has requested assistance from the Member with respect to the subject matter of the record.
4. A record in this system of records may be disclosed, as a routine use, to a contractor of the Agency having need for the information in order to perform a contract. Recipients of information shall be required to comply with the requirements of the Privacy Act of 1974, as amended, pursuant to 5 U.S.C. 552a(m).
5. A record related to an International Application filed under the Patent Cooperation Treaty in this system of records may be disclosed, as a routine use, to the International Bureau of the World Intellectual Property Organization, pursuant to the Patent Cooperation Treaty.
6. A record in this system of records may be disclosed, as a routine use, to another federal agency for purposes of National Security review (35 U.S.C. 181) and for review pursuant to the Atomic Energy Act (42 U.S.C. 218(c)).
7. A record from this system of records may be disclosed, as a routine use, to the Administrator, General Services, or his/her designee, during an inspection of records conducted by GSA as part of that agency's responsibility to recommend improvements in records management practices and programs, under authority of 44 U.S.C. 2904 and 2906. Such disclosure shall be made in accordance with the GSA regulations governing inspection of records for this purpose, and any other relevant (*i.e.*, GSA or Commerce) directive. Such disclosure shall not be used to make determinations about individuals.
8. A record from this system of records may be disclosed, as a routine use, to the public after either publication of the application pursuant to 35 U.S.C. 122(b) or issuance of a patent pursuant to 35 U.S.C. 151. Further, a record may be disclosed, subject to the limitations of 37 CFR 1.14, as a routine use, to the public if the record was filed in an application which became abandoned or in which the proceedings were terminated and which application is referenced by either a published application, an application open to public inspection or an issued patent.
9. A record from this system of records may be disclosed, as a routine use, to a Federal, State, or local law enforcement agency, if the USPTO becomes aware of a violation or potential violation of law or regulation.

UNITED STATES PATENT AND TRADEMARK OFFICE

Commissioner for Patents
United States Patent and Trademark Office
P.O. Box 1450
Alexandria, VA 22313-1450
www.uspto.gov

BROOKS KUSHMAN, P.C.
1000 TOWN CENTER
TWENTY-SECOND FLOOR
SOUTHFIELD, MI 48075

MAILED
JAN 18 2012
OFFICE OF PETITIONS

In re Application of	:
Karl-Johan Engdahl	: DECISION ON REQUEST TO
Application No.: 13/147,720	: PARTICIPATE IN THE PATENT
Filed: August 3, 2011	: PROSECUTION HIGHWAY
Attorney Docket No.: AWAS0101PUSA	: PROGRAM AND PETITION
For: FLUID CONTAINER CARRYING	: TO MAKE SPECIAL UNDER
DEVICE AND A NECK PROTECTION	: 37 CFR 1.102(a)
DEVICE PROVIDED WITH SUCH A	:
FLUID CONTAINER CARRYING DEVICE	:

This is a decision on the request to participate in the PCT Patent Prosecution Highway (PCT-PPH) pilot program and the petition under 37 CFR 1.102(a), filed on November 1, 2011, to make the above-identified application special.

The request and petition are **GRANTED**.

Discussion

A grantable request to participate in the PCT-PPH pilot program and petition to make special require:

(1) The U.S. application must have an eligible relationship to one or more PCT applications where the ISA or IPEA are the Australia, Austria, EPO, Finland, JPO, KIPO, NPI, NBPR, Spain, Sweden, USPTO, or CHINA;

(2) At least one claim in the PCT application has novelty, inventive step, and industrial applicability and must be free of any observations in Box VIII in the latest work product in the international stage or applicant must identify and explain why the claim(s) is/are not subject to the observation in Box VIII;

(3) Applicant must submit a copy of the claim(s) from the PCT application(s) that have novelty, inventive step, and industrial applicability along with an English translation thereof and a statement that the English translation is accurate, if the claims are not in the English language;

(4) All the claims in the U.S. application must sufficiently correspond or be amended to sufficiently correspond to the claim(s) that have novelty, inventive step, and industrial applicability in the PCT application(s);

(5) Examination of the U.S. application has not begun;

(6) Applicant must submit a copy of the latest international work product from the PCT application indicating that the claim(s) have novelty, inventive step, and industrial applicability along with an English translation thereof and a statement that the English translation is accurate if the latest international work product is not in the English language;

(7) Applicant must submit an IDS listing the documents cited by the PCT examiner in the international work product along with copies of documents except U.S. patents or U.S. patent application publications.

The request to participate in the PCT-PPH pilot program and petition comply with the above requirements. Accordingly, the above-identified application has been accorded "special" status.

Telephone inquiries concerning this decision should be directed to Andrea Smith at (571) 272-3226. All other inquiries concerning the examination or status of the application is accessible in the PAIR system at http://www.uspto.gov/ebc.index.html.

This application will be forwarded to the examiner for action on the merits commensurate with this decision.

/Andrea Smith/
Andrea Smith
Petitions Examiner
Office of Petitions

David Buck
Petitions Examiner

PTO/SB/20PCT-US (09-10)
Approved for use through 01/31/2012. OMB 0651-0058
U.S. Patent and Trademark Office; U. S. DEPARTMENT OF COMMERCE
Under the Paperwork Reduction Act of 1995, no persons are required to respond to a collection of information unless it displays a valid OMB control number.

REQUEST FOR PARTICIPATION IN THE PATENT COOPERATION TREATY - PATENT PROSECUTION HIGHWAY (PCT-PPH) PILOT PROGRAM IN A U.S. APPLICATION WHERE THE USPTO WAS THE ISA OR IPEA

Application No:	U.S. National Phase of PCT/JP2010/000599	Filing date:	February 2, 2010
First Named Inventor:	Kaoru YASUDA		
Title of the Invention:	PNEUMATIC TIRE FOR PASSENGER CAR AND METHOD OF MANUFACTURING THE SAME		

THIS REQUEST FOR PARTICIPATION IN THE PCT-PPH PILOT PROGRAM ALONG WITH THE REQUIRED DOCUMENTS MUST BE SUBMITTED VIA EFS-WEB. INFORMATION REGARDING EFS-WEB IS AVAILABLE AT HTTP://WWW.USPTO.GOV/EBC/EFS_HELP.HTML

APPLICANT HEREBY REQUESTS PARTICIPATION IN THE PCT-PPH PROGRAM AND PETITIONS TO MAKE THE ABOVE-IDENTIFIED APPLICATION SPECIAL UNDER THE PCT-PPH PROGRAM.

The above-identified application is (1) a national stage entry of the corresponding PCT application, or (2) a national stage entry of another PCT application which claims priority to the corresponding PCT application, or (3) a national application that claims domestic/ foreign priority to the corresponding PCT application, or (4) a national application which forms the basis for the priority claim in the corresponding PCT application, or (5) a continuing application of a U.S. application that satisfies one of (1) to (4) above, or (6) a U.S. application that claims domestic benefit to a U.S. provisional application which forms the basis for the priority claim in the corresponding PCT application.

The corresponding PCT application number(s) is/are: PCT/JP2010/000599

The international date of the corresponding PCT application(s) is/are:

February 2, 2010

I. List of Required Documents:

a. **A copy of the latest international work product (WO/ISA, WO/IPEA, or IPER) in the above–identified corresponding PCT application(s)**

- [x] Is attached
- [ ] Is not attached because the document is already in the U.S. application.

b. **A copy of all claims which were indicated as having novelty, inventive step and industrial applicability in the above-identified corresponding PCT application(s).**

- [x] Is attached.
- [ ] Is not attached because the document is already in the U.S. application.

c. **English translations of the documents in a. and b. above are attached (if the documents are not in the English language). A statement that the English translation is accurate is attached for the document in b. above.**

This collection of information is required by 35 U.S.C. 119, 37 CFR 1.55, and 37 CFR 1.102(d). The information is required to obtain or retain a benefit by the public, which is to file (and by the USPTO to process) an application. Confidentiality is governed by 35 U.S.C. 122 and 37 CFR 1.11 and 1.14. This collection is estimated to take 2 hours to complete, including gathering, preparing, and submitting the completed application form to the USPTO. Time will vary depending upon the individual case. Any comments on the amount of time you require to complete this form and/or suggestions for reducing this burden should be sent to the Chief Information Officer, U.S. Patent and Trademark Office, U.S. Department of Commerce, P.O. Box 1450, Alexandria, VA 22313-1450. DO NOT SEND FEES OR COMPLETED FORMS TO THIS ADDRESS.

Under the Paperwork Reduction Act of 1995, no persons are required to respond to a collection of information unless it displays a valid OMB control number.

REQUEST FOR PARTICIPATION IN THE PCT-PPH PILOT PROGRAM IN A U.S. APPLICATION WHERE THE USPTO WAS THE ISA OR IPEA

(continued)

Application No.:	U.S. National Phase of PCT/JP2010/000599
First Named Inventor:	Kaoru YASUDA

d. **(1) An information disclosure statement listing the documents cited in the international work products (ISR, WO/ISA, WO/IPEA, IPER) of the corresponding PCT application.**

- [x] Is attached
- [ ] Has already been filed in the above-identified U.S. application on _____

(2) Copies of all documents (except) for U.S. patents or U.S. patent application publications)

- [x] Are attached.
- [ ] Have already been filed in the above-identified U.S. application on _____

II. Claims Correspondence Table:

Claims in US Application	Patentable Claims in the corresponding PCT Application	Explanation regarding the correspondence
1	1	Preliminary Amendment
2	2	Preliminary Amendment
3	3/1	Preliminary Amendment
4	4/1	Preliminary Amendment
5	5/1	Preliminary Amendment
6	6	Preliminary Amendment
7	7	Preliminary Amendment
8	8	Preliminary Amendment
9	9/6	Preliminary Amendment
10	10/6	Preliminary Amendment
11	11/6	Preliminary Amendment
12	3/2	Preliminary Amendment
13	4/2	Preliminary Amendment
14	5/2	Preliminary Amendment
15	5/4/3/2	Preliminary Amendment
16	1	Preliminary Amendment
17	9/7	Preliminary Amendment
18	10/7	Preliminary Amendment
19	11/10/9/8/7	Preliminary Amendment

III. All the claims in the US application sufficiently correspond to the patentable claims in the corresponding PCT application.

Signature /Joseph J. Buczynski/	Date August 3, 2011
Name (Print/Typed) Joseph J. Buczynski	Registration Number 35,084

REQUEST FOR PARTICIPATION IN THE PATENT COOPERATION TREATY - PATENT PROSECUTION HIGHWAY (PCT-PPH) PILOT PROGRAM IN A U.S. APPLICATION WHERE THE USPTO WAS THE ISA OR IPEA

ATTACHMENT

Application No:	U.S. National Phase of PCT/JP2010/000599
First Named Inventor:	Kaoru YASUDA

II. Claims Correspondence Table (Continued):

Claims in US Application	Patentable Claims in the corresponding PCT Application	Explanation regarding the correspondence
20	6	Preliminary Amendment

/Joseph J. Buczynski/	August 3, 2011
Joseph J. Buczynski	35,084

Privacy Act Statement

The **Privacy Act of 1974 (P.L. 93-579)** requires that you be given certain information in connection with your submission of the attached form related to a patent application or patent. Accordingly, pursuant to the requirements of the Act, please be advised that: (1) the general authority for the collection of this information is 35 U.S.C. 2(b)(2); (2) furnishing of the information solicited is voluntary; and (3) the principal purpose for which the information is used by the U.S. Patent and Trademark Office is to process and/or examine your submission related to a patent application or patent. If you do not furnish the requested information, the U.S. Patent and Trademark Office may not be able to process and/or examine your submission, which may result in termination of proceedings or abandonment of the application or expiration of the patent.

The information provided by you in this form will be subject to the following routine uses:

1. The information on this form will be treated confidentially to the extent allowed under the Freedom of Information Act (5 U.S.C. 552) and the Privacy Act (5 U.S.C 552a). Records from this system of records may be disclosed to the Department of Justice to determine whether disclosure of these records is required by the Freedom of Information Act.
2. A record from this system of records may be disclosed, as a routine use, in the course of presenting evidence to a court, magistrate, or administrative tribunal, including disclosures to opposing counsel in the course of settlement negotiations.
3. A record in this system of records may be disclosed, as a routine use, to a Member of Congress submitting a request involving an individual, to whom the record pertains, when the individual has requested assistance from the Member with respect to the subject matter of the record.
4. A record in this system of records may be disclosed, as a routine use, to a contractor of the Agency having need for the information in order to perform a contract. Recipients of information shall be required to comply with the requirements of the Privacy Act of 1974, as amended, pursuant to 5 U.S.C. 552a(m).
5. A record related to an International Application filed under the Patent Cooperation Treaty in this system of records may be disclosed, as a routine use, to the International Bureau of the World Intellectual Property Organization, pursuant to the Patent Cooperation Treaty.
6. A record in this system of records may be disclosed, as a routine use, to another federal agency for purposes of National Security review (35 U.S.C. 181) and for review pursuant to the Atomic Energy Act (42 U.S.C. 218(c)).
7. A record from this system of records may be disclosed, as a routine use, to the Administrator, General Services, or his/her designee, during an inspection of records conducted by GSA as part of that agency's responsibility to recommend improvements in records management practices and programs, under authority of 44 U.S.C. 2904 and 2906. Such disclosure shall be made in accordance with the GSA regulations governing inspection of records for this purpose, and any other relevant (*i.e.*, GSA or Commerce) directive. Such disclosure shall not be used to make determinations about individuals.
8. A record from this system of records may be disclosed, as a routine use, to the public after either publication of the application pursuant to 35 U.S.C. 122(b) or issuance of a patent pursuant to 35 U.S.C. 151. Further, a record may be disclosed, subject to the limitations of 37 CFR 1.14, as a routine use, to the public if the record was filed in an application which became abandoned or in which the proceedings were terminated and which application is referenced by either a published application, an application open to public inspection or an issued patent.
9. A record from this system of records may be disclosed, as a routine use, to a Federal, State, or local law enforcement agency, if the USPTO becomes aware of a violation or potential violation of law or regulation.

UNITED STATES PATENT AND TRADEMARK OFFICE

UNITED STATES DEPARTMENT OF COMMERCE
United States Patent and Trademark Office
Address: COMMISSIONER FOR PATENTS
P.O. Box 1450
Alexandria, Virginia 22313-1450
www.uspto.gov

APPLICATION NO.	FILING DATE	FIRST NAMED INVENTOR	ATTORNEY DOCKET NO.	CONFIRMATION NO.
13/147,764	08/03/2011	Kaoru Yasuda	YR-US103016	5854

22919 7590 10/27/2011
GLOBAL IP COUNSELORS, LLP
1233 20TH STREET, NW, SUITE 700
WASHINGTON, DC 20036-2680

EXAMINER

ART UNIT	PAPER NUMBER
1747	

NOTIFICATION DATE	DELIVERY MODE
10/27/2011	ELECTRONIC

Please find below and/or attached an Office communication concerning this application or proceeding.

The time period for reply, if any, is set in the attached communication.

Notice of the Office communication was sent electronically on above-indicated "Notification Date" to the following e-mail address(es):

mailpto@giplaw.com

UNITED STATES PATENT AND TRADEMARK OFFICE

Commissioner for Patents
United States Patent and Trademark Office
P.O. Box 1450
Alexandria, VA 22313-1450
www.uspto.gov

OCT 27 2011

BC

In re application of Kaoru Yasuda Serial No. 13/147,764 Filed: August 03, 2011 Attorney Docket No: YR-US103016	: : : : : :	DECISION ON REQUEST TO PARTICIPATE IN PATENT PROSECUTION HIGHWAY PROGRAM AND PETITION TO MAKE SPECIAL UNDER 37 CFR 1.102(a)

This is a decision on the request for reconsideration to participate in the PCT Patent Prosecution Highway (PCT-PPH) pilot program and the petition under 37 CFR 1.102(a), filed August 03, 2011, to make the above-identified application special.

The request and petition are **GRANTED**.

A grantable request to participate in the PCT-PPH pilot program and petition to make special require:

(1) The U.S. application must disclose an eligible relationship to one or more PCT applications where the ISA or IPEA are the APO, IPA, JPO, KIPO, NBPR, NPI, EPO, Rospatent, IPOS, SPTO, PRV, UK IPO or USPTO;

(2) At least one claim in the PCT application has novelty, inventive step, and industrial applicability and must be free of any observations in Box VIII in the latest work product in the international stage or applicant must identify and explain why the claim(s) is/are not subject to the observation in Box VIII;

(3) Applicant must submit a copy of the claim(s) from the PCT application(s) that have novelty, inventive step, and industrial applicability along with an English translation thereof and a statement that the English translation is accurate, if the claims are not in the English language;

(4) All the claims in the U.S. application must sufficiently correspond or be amended to sufficiently correspond to the claim(s) that have novelty, inventive step, and industrial applicability in the PCT application(s);

(5) Examination of the U.S. application has not begun;

(6) Applicant must submit a copy of the latest international work product from the PCT application indicating that the claim(s) have novelty, inventive step, and industrial applicability along with an English translation thereof if the latest international work

product is not in the English language; and

(7) Applicant must submit an IDS listing the documents cited by the PCT examiner in the international work product along with copies of documents except U.S. patents or U.S. patent application publications.

The request to participate in the PPH program and petition comply with the above requirements. Accordingly, the above-identified application has been accorded "special" status.

The application is being forwarded to the examiner for action on the merits commensurate with this decision.

Any inquiry regarding this decision should be directed to Blaine Copenheaver, Quality Assurance Specialist, at (571) 272-1156.

All other inquiries concerning the examination or status of the application is accessible in the PAIR system at http://www.uspto.gov/ebc/index.html.

/Blaine Copenheaver/

Blaine Copenheaver
Quality Assurance Specialist
Technology Center 1700

UNITED STATES PATENT AND TRADEMARK OFFICE

UNITED STATES DEPARTMENT OF COMMERCE
United States Patent and Trademark Office
Address: COMMISSIONER FOR PATENTS
P.O. Box 1450
Alexandria, Virginia 22313-1450
www.uspto.gov

APPLICATION NO.	FILING DATE	FIRST NAMED INVENTOR	ATTORNEY DOCKET NO.	CONFIRMATION NO.
13/147,780	08/03/2011	Ernst Gösta Robert Axelsson	81421-7180	6045

28765 7590 11/02/2011
WINSTON & STRAWN LLP
PATENT DEPARTMENT
1700 K STREET, N.W.
WASHINGTON, DC 20006

EXAMINER

ART UNIT	PAPER NUMBER
1742	

NOTIFICATION DATE	DELIVERY MODE
11/02/2011	ELECTRONIC

Please find below and/or attached an Office communication concerning this application or proceeding.

The time period for reply, if any, is set in the attached communication.

Notice of the Office communication was sent electronically on above-indicated "Notification Date" to the following e-mail address(es):

patentdocket@winston.com
mwalker@winston.com

UNITED STATES PATENT AND TRADEMARK OFFICE

Commissioner for Patents
United States Patent and Trademark Office
P.O. Box 1450
Alexandria, VA 22313-1450
www.uspto.gov

November 1, 2011 WG

In re application of Ernst Axelsson et al. Serial No. 13/147,780 Filed: August 3, 2011 For: CORE ASSEMBLY FOR AN INJECTION MOULDING-MACHINE	: : : : : : :	DECISION ON REQUEST TO PARTICIPATE IN PATENT PROSECUTION HIGHWAY PROGRAM AND PETITION TO MAKE SPECIAL UNDER 37 CFR 1.102(a)

This is a decision on the request for reconsideration to participate in the Patent Prosecution Highway (PPH) program filed August 3, 2011.

The request and petition are **DISMISSED**.

A grantable request to participate in the PPH program and petition to make special require:

(1) The U.S. application must validly claim priority under 35 U.S.C. 119(a) to one or more applications filed in the EPO;

(2) Applicant must submit a copy of the allowable/patentable claim(s) from the EPO application(s) along with an English translation thereof and a statement that the English translation is accurate;

(3) All the claims in the U.S. application must sufficiently correspond or be amended to sufficiently correspond to the allowable/patentable claim(s) in the EPO application(s);

(4) Examination of the U.S. application has not begun;

(5) Applicant must submit a copy of all the office actions from each of the EPO application(s) containing the allowable/patentable claim(s) along with an English translation thereof and a statement that the English translation is accurate; and

(6) Applicant must submit an IDS listing the documents cited by the EPO examiner in the EPO office action along with copies of documents except U.S. patents or U.S. patent application publications.

The request to participate in the PPH program and petition fail because applicant has not submitted a copy of all the office actions from each of the EPO application(s) containing the allowable/patentable claim(s). Note that the submitted International

Application No. 13/147,780

Preliminary Report on Patentability is not a copy of the office action from the EPO application.

Applicant is given a time period of **ONE MONTH OR THIRTY DAYS**, whichever is longer, from the mailing date of this decision to correct the deficiencies. **NO EXTENSION OF TIME UNDER 37 CFR 1.136 IS PERMITTED.** If the deficiencies are not corrected within the time period given, the application will await action in its regular turn.

The application is being forwarded to the examiner for action on the merits commensurate with this decision.

Any inquiry regarding this decision should be directed to Walter D. Griffin, Supervisory Patent Examiner, at (571) 272-1447.

All other inquiries concerning the examination or status of the application is accessible in the PAIR system at http://www.uspto.gov/ebc/index.html.

/Walter D. Griffin/

Walter D. Griffin
Supervisory Patent Examiner
Technology Center 1700

UNITED STATES PATENT AND TRADEMARK OFFICE

Commissioner for Patents
United States Patent and Trademark Office
P.O. Box 1450
Alexandria, VA 22313-1450
www.uspto.gov

WINSTON & STRAWN LLP
PATENT DEPARTMENT
1700 K STREET, N.W.
WASHINGTON DC 20006

MAILED
JAN 26 2012
OFFICE OF PETITIONS

In re Application of:
Axelsson et al.
Application No. 13/147,780
Filed: August 3, 2011
Attorney Docket No. 81421-7180

: DECISION ON REQUEST TO
: PARTICIPATE IN THE PATENT
: PROSECUTION HIGHWAY
: PROGRAM AND PETITION
: TO MAKE SPECIAL UNDER
: 37 CFR 1.102(a)

This is a decision on the second request to participate in the PCT Patent Prosecution Highway (PCT-PPH) program and the petition under 37 CFR 1.102(a), filed November 28, 2011, to make the above-identified application special.

Petitioner asserts that "To the extent that Applicants' attorney may have submitted the wrong PTO form, a new form is enclosed referencing the PCT/EP application rather than the subsequently filed EPO application." Further, petitioner asserts that the documents submitted "clearly establish that claims 1-14 of the PCT/EP application meet the criteria of PCT articles 33(2)-(4) and th[ese] are allowable". However, this submission with respect to the Claims Correspondence Table indicates that Claims 15-28 in the US application have "Identical subject matter claimed but edits made to conform the European claims to the US format and to avoid multiple dependencies" with those Claims 1-14 in the EPO application. However, applicant has failed to ensure that all the claims in the U.S. application (currently amended claims filed August 3, 2011) sufficiently correspond to the allowable/patentable claims in the EPO application. US claim 15 requires "A mould having a movable mould half and a stationary mould half clamped onto a platen of an injection moulding-machine", while EP claim 1 requires wherein, "Mould (30;45) with a core assembly (1;16), where the core assembly comprises an actuator (2;17) for during operation advancing and retracting at least one core (5;20) into and from a mould cavity (44) in a mould (45;30) consisting of a movable mould half (45) and a stationary mould half (30) clamped onto each their planten". Accordingly, the scope of US claim 1 is different from the scope of EP claim 1.

Further, petitioner is permitted only two attempts to qualify to participate in the Patent Prosecution Highway (PCT-PPH) program and petition under 37 CFR 1.102(a).

Therefore the request and petition are **DENIED**.

Since, the request and petition do not qualify the above-identified application to participate in the (PCT-PPH) program, the application will await action in its regular turn.

Additionally, it is noted that petitioner submitted an untimely supplemental response January 5, 2012 whose contents would not have corrected the above-identified deficiencies.

Telephone inquiries concerning this decision should be directed to Joan Olszewski at 571-272-7751.

All other inquiries concerning the examination or status of the application is accessible in the PAIR system at http://www.uspto.gov/ebc/index.html.

Anthony Knight
Director
Office of Petitions

UNITED STATES PATENT AND TRADEMARK OFFICE

Commissioner for Patents
United States Patent and Trademark Office
P.O. Box 1450

MAILED

FEB 22 2012

OFFICE OF PETITIONS

B. CRAIG KILLOUGH
P. O. DRAWER H
CHARLESTON SC 29402

In re Application of	: DECISION ON REQUEST TO
Michael A. LAKE et al.	: PARTICIPATE IN PPH PROGRAM
Application No. 13/147,785	: AND PETITION TO MAKE SPECIAL
Filed: August 3, 0211	: UNDER 37 CFR 1.102(a)
Atty. Docket No.: 3460.001/US	:
For: PROCESS FOR RECOVERING LIGNIN	

This is a decision on the request to participate in the Patent Prosecution Highway (PPH) program and the petition under 37 CFR 1.102(a), filed January 24, 2012 to make the above-identified application special.

The petition and request are **DISMISSED**.

A grantable request to participate in the PPH (patent prosecution highway) program and petition to make special require:

(1) the U.S. application is a Paris Convention application which either validly claims priority under 35 U.S.C. 119(a) and 37 CFR 1.55 to one or more applications filed in the KIPO (Korean Intellectual Property Office) or claims priority to a PCT application that contains no priority claims. Alternatively, it can be a national stage application under the PCT that contains no priority claims;

(2) applicant must submit a copy of the allowable/patentable claim(s) from the KIPO application(s) along with an English translation thereof and a statement that the English translation is accurate;

(3) all the claims in the U.S. application must sufficiently correspond or be amended to sufficiently correspond to the allowable/patentable claim(s) in the KIPO application(s);

(4) examination of the U.S. application has not begun;

(5) applicant must submit a copy of all the office actions from each of the KIPO application(s) containing the allowability/patentable claim(s) along with an English translation thereof and a statement that the English translation is accurate; and

(6) applicant must submit an IDS listing the documents cited by the KIPO examiner in the KIPO office action along with copies of documents except U.S. patents or U.S. patent application publications.

Requirements (1), (3) to (4), and (6) above are considered to have been met. However, the request to participate in the PPH program and petition fail to meet requirements (2) and (5).

Regarding requirement (2), applicant has not submitted a copy of claims from the KIPO application, but rather has submitted claims from the PCT application.

Regarding requirement (5), applicant has failed to submit copies of all office actions from the KIPO application that contain the allowable/patentable claims. Whereas applicant has provided claims from the PCT application, these do not appear to be from the KIPO application.

Applicant is given **ONE** opportunity with a time period of **ONE MONTH** or **THIRTY DAYS**, whichever is longer, from the mailing date of this decision to correct the deficiencies. **NO EXTENSION OF TIME UNDER 37 CFR 1.136 IS PERMITTED**. If the deficiencies are not corrected within the time period given, the application will await action in its regular turn.

Response must be filed via the Electronic Filing System (EFS) using the document description: Petition to make special under Patent Pros. Hwy. Any preliminary amendments and IDS submitted with the PPH documents must be separately indexed as a preliminary amendment and IDS, respectively.

Telephone inquiries concerning this decision should be directed to Robert DeWitty, Petition Attorney, Office of Petitions at 571-272-8427.

All other inquiries concerning the examination or status of the application is accessible in the PAIR system at http://www.uspto.gov/ebc/index.html.

David Bucci
Petitions Examiner
Office of Petitions

UNITED STATES PATENT AND TRADEMARK OFFICE

Commissioner for Patents
United States Patent and Trademark Office
P.O. Box 1450
Alexandria, VA 22313-1450
www.uspto.gov

BLAKELY SOKOLOFF TAYLOR &
ZAFMAN LLP
1279 OAKMEAD PARKWAY
SUNNYVALE CA 94085-4040

MAILED
AUG 29 2011
OFFICE OF PETITIONS

In re Application of
Erano Martin Evangelista
Application No. 13/147,796
Filed: August 3, 2011
Attorney Docket No. 9082P002

DECISION ON PETITION
TO MAKE SPECIAL UNDER
37 CFR 1.102(c)(1)

This is a decision on the petition under 37 CFR 1.102(c)(1), filed August 12, 2011, to make the above-identified application special based on applicant's age as set forth in M.P.E.P. § 708.02, Section IV.

The petition is **GRANTED**.

A grantable petition to make an application special under 37 CFR 1.102(c)(1) and MPEP § 708.02, Section IV: Applicant's Age must be accompanied by evidence showing that at least one of the applicants is 65 years of age, or more, such as a birth certificate or a statement by applicant. No fee is required

The instant petition includes a statement from the attorney of record declaring that he is in possession of such evidence that shows the applicant, Erano Martin Evangelista 65 years of age or older. Accordingly, the above-identified application has been accorded "special" status.

Telephone inquiries concerning this decision should be directed to Terri Johnson at 571-272-2991.

All other inquiries concerning either the examination or status of the application should be directed to the Technology Center.

The application is being forwarded to the Office of Patent Application for further processing.

/Terri Johnson/
Terri Johnson
Petitions Examiner
Office of Petitions

PTO/SB/20PCT-EP (05-10)
Approved for use through 01/31/2012. OMB 0651-0058
U.S. Patent and Trademark Office; U. S. DEPARTMENT OF COMMERCE
Under the Paperwork Reduction Act of 1995, no persons are required to respond to a collection of information unless it displays a valid OMB control number.

REQUEST FOR PARTICIPATION IN THE PATENT COOPERATION TREATY - PATENT PROSECUTION HIGHWAY (PCT-PPH) PILOT PROGRAM BETWEEN THE EUROPEAN PATENT OFFICE (EPO) AND THE USPTO

Application No:	13/147,797	Filing date:	08/03/2011
First Named Inventor:	Markus Buscher		
Title of the Invention:	Method for the Beta Annealing of a Workpiece Produced from a TI Alloy		

THIS REQUEST FOR PARTICIPATION IN THE PCT-PPH PILOT PROGRAM ALONG WITH THE REQUIRED DOCUMENTS MUST BE SUBMITTED VIA EFS-WEB. INFORMATION REGARDING EFS-WEB IS AVAILABLE AT HTTP://WWW.USPTO.GOV/EBC/EFS_HELP.HTML

APPLICANT HEREBY REQUESTS PARTICIPATION IN THE PCT-PPH PROGRAM AND PETITIONS TO MAKE THE ABOVE-IDENTIFIED APPLICATION SPECIAL UNDER THE PCT-PPH PROGRAM.

The above-identified application is (1) a national stage entry of the corresponding PCT application, or (2) a national stage entry of another PCT application which claims priority to the corresponding PCT application, or (3) a national application that claims domestic/ foreign priority to the corresponding PCT application, or (4) a national application which forms the basis for the priority claim in the corresponding PCT application, or (5) a continuing application of a U.S. application that satisfies one of (1) to (4) above, or (6) a U.S. application that claims domestic benefit to a U.S. provisional application which forms the basis for the priority claim in the corresponding PCT application.

The corresponding PCT application number(s) is/are: PCT/EP2010/051078

The international filing date of the corresponding PCT application(s) is/are: 01/29/2010

I. List of Required Documents:

a. **A copy of the latest international work product (WO/ISA, WO/IPEA, or IPER) in the above–identified corresponding PCT application(s)**

- [x] Is attached
- [ ] Is not attached because the document is already in the U.S. application.

b. **A copy of all claims which were indicated as having novelty, inventive step and industrial applicability in the above-identified corresponding PCT application(s).**

- [ ] Is attached.
- [x] Is not attached because the document is already in the U.S. application.

c. **English translations of the documents in a. and b. above are attached (if the documents are not in the English language). A statement that the English translation is accurate is attached for the document in b. above.**

This collection of information is required by 35 U.S.C. 119, 37 CFR 1.55, and 37 CFR 1.102(d). The information is required to obtain or retain a benefit by the public, which is to file (and by the USPTO to process) an application. Confidentiality is governed by 35 U.S.C. 122 and 37 CFR 1.11 and 1.14. This collection is estimated to take 2 hours to complete, including gathering, preparing, and submitting the completed application form to the USPTO. Time will vary depending upon the individual case. Any comments on the amount of time you require to complete this form and/or suggestions for reducing this burden should be sent to the Chief Information Officer, U.S. Patent and Trademark Office, U.S. Department of Commerce, P.O. Box 1450, Alexandria, VA 22313-1450. DO NOT SEND FEES OR COMPLETED FORMS TO THIS ADDRESS.

Approved for use through 01/31/2012. OMB 0651-0058
U.S.Patent and Trademark Office; U.S. DEPARTMENT OF COMMERCE

Under the Paperwork Reduction Act of 1995, no persons are required to respond to a collection of information unless it displays a valid OMB control number.

REQUEST FOR PARTICIPATION IN THE PCT-PPH PILOT PROGRAM BETWEEN THE EPO AND THE USPTO

(continued)

Application No.:	13/147,797
First Named Inventor:	Markus Buscher

d. **(1) An information disclosure statement listing the documents cited in the international work products (ISR, WO/ISA, WO/IPEA, IPER) of the corresponding PCT application.**

- [x] Is attached
- [ ] Has already been filed in the above-identified U.S. application on _____

(2) Copies of all documents (except) for U.S. patents or U.S. patent application publications)

- [x] Are attached.
- [ ] Have already been filed in the above-identified U.S. application on _____

II. Claims Correspondence Table:

Claims in US Application	Patentable Claims in the corresponding PCT Application	Explanation regarding the correspondence
6	1	Minor wording changes to conform to US practice.
7	2	Minor wording changes to conform to US practice.
8	3	Minor wording changes to conform to US practice.
9	4	Minor wording changes to conform to US practice and remove multiple-dependencies.
10	4	Minor wording changes to conform to US practice and remove multiple-dependencies.
11	4	Minor wording changes to conform to US practice and remove multiple-dependencies.
12	5	Minor wording changes to conform to US practice and remove multiple-dependencies.
13	5	Minor wording changes to conform to US practice and remove multiple-dependencies.
14	5	Minor wording changes to conform to US practice and remove multiple-dependencies.
15	5	Minor wording changes to conform to US practice and remove multiple-dependencies.
16	5	Minor wording changes to conform to US practice and remove multiple-dependencies.
17	5	Minor wording changes to conform to US practice and remove multiple-dependencies.

III. All the claims in the US application sufficiently correspond to the patentable claims in the corresponding PCT application.

Signature /Margaret Polson/	Date 2011-09-13
Name (Print/Typed) Margaret Polson	Registration Number 42082

Privacy Act Statement

The **Privacy Act of 1974 (P.L. 93-579)** requires that you be given certain information in connection with your submission of the attached form related to a patent application or patent. Accordingly, pursuant to the requirements of the Act, please be advised that: (1) the general authority for the collection of this information is 35 U.S.C. 2(b)(2); (2) furnishing of the information solicited is voluntary; and (3) the principal purpose for which the information is used by the U.S. Patent and Trademark Office is to process and/or examine your submission related to a patent application or patent. If you do not furnish the requested information, the U.S. Patent and Trademark Office may not be able to process and/or examine your submission, which may result in termination of proceedings or abandonment of the application or expiration of the patent.

The information provided by you in this form will be subject to the following routine uses:

1. The information on this form will be treated confidentially to the extent allowed under the Freedom of Information Act (5 U.S.C. 552) and the Privacy Act (5 U.S.C 552a). Records from this system of records may be disclosed to the Department of Justice to determine whether disclosure of these records is required by the Freedom of Information Act.
2. A record from this system of records may be disclosed, as a routine use, in the course of presenting evidence to a court, magistrate, or administrative tribunal, including disclosures to opposing counsel in the course of settlement negotiations.
3. A record in this system of records may be disclosed, as a routine use, to a Member of Congress submitting a request involving an individual, to whom the record pertains, when the individual has requested assistance from the Member with respect to the subject matter of the record.
4. A record in this system of records may be disclosed, as a routine use, to a contractor of the Agency having need for the information in order to perform a contract. Recipients of information shall be required to comply with the requirements of the Privacy Act of 1974, as amended, pursuant to 5 U.S.C. 552a(m).
5. A record related to an International Application filed under the Patent Cooperation Treaty in this system of records may be disclosed, as a routine use, to the International Bureau of the World Intellectual Property Organization, pursuant to the Patent Cooperation Treaty.
6. A record in this system of records may be disclosed, as a routine use, to another federal agency for purposes of National Security review (35 U.S.C. 181) and for review pursuant to the Atomic Energy Act (42 U.S.C. 218(c)).
7. A record from this system of records may be disclosed, as a routine use, to the Administrator, General Services, or his/her designee, during an inspection of records conducted by GSA as part of that agency's responsibility to recommend improvements in records management practices and programs, under authority of 44 U.S.C. 2904 and 2906. Such disclosure shall be made in accordance with the GSA regulations governing inspection of records for this purpose, and any other relevant (*i.e.*, GSA or Commerce) directive. Such disclosure shall not be used to make determinations about individuals.
8. A record from this system of records may be disclosed, as a routine use, to the public after either publication of the application pursuant to 35 U.S.C. 122(b) or issuance of a patent pursuant to 35 U.S.C. 151. Further, a record may be disclosed, subject to the limitations of 37 CFR 1.14, as a routine use, to the public if the record was filed in an application which became abandoned or in which the proceedings were terminated and which application is referenced by either a published application, an application open to public inspection or an issued patent.
9. A record from this system of records may be disclosed, as a routine use, to a Federal, State, or local law enforcement agency, if the USPTO becomes aware of a violation or potential violation of law or regulation.

UNITED STATES PATENT AND TRADEMARK OFFICE

Commissioner for Patents
United States Patent and Trademark Office
P.O. Box 1450
Alexandria, VA 22313-1450
www.uspto.gov

OPPEDAHL PATENT LAW FIRM LLC (P&A)
12000 PECOS STREET #252
WESTMINSTER CO 80234

MAILED
APR 02 2012
OFFICE OF PETITIONS

In re Application of:	: DECISION ON REQUEST TO
Buscher et al.	: PARTICIPATE IN THE PATENT
Application No. 13/147,797	: PROSECUTION HIGHWAY
Filed: September 19, 2011	: PROGRAM AND PETITION
Attorney Docket No. 00006.P-OF02-500US	: TO MAKE SPECIAL UNDER
	: 37 CFR 1.102(a)

This is a decision on the request to participate in the PCT Patent Prosecution Highway (PCT-PPH) program and the petition under 37 CFR 1.102(a), filed September 13, 2011, to make the above-identified application special.

The request and petition are **DENIED**.

Examination of the above-identified U.S. application has begun and therefore the request from applicant to participate in the PCT-PPH program is denied. A non-final Office action was mailed March 9, 2012 in the above-identified application.

Telephone inquiries concerning this decision should be directed to Petitions Examiner Joan Olszewski at 571-272-7751.

All other inquiries concerning the examination or status of the application is accessible in the PAIR system at http://www.uspto.gov/ebc/index.html.

Anthony Knight
Director
Office of Petitions

UNITED STATES PATENT AND TRADEMARK OFFICE

UNITED STATES DEPARTMENT OF COMMERCE
United States Patent and Trademark Office
Address: COMMISSIONER FOR PATENTS
P.O. Box 1450
Alexandria, Virginia 22313-1450
www.uspto.gov

APPLICATION NO.	FILING DATE	FIRST NAMED INVENTOR	ATTORNEY DOCKET NO.	CONFIRMATION NO.
13/147,932	08/04/2011	Satoshi Nakamura	Q125931	7394

23373 7590 09/08/2011
SUGHRUE MION, PLLC
2100 PENNSYLVANIA AVENUE, N.W.
SUITE 800
WASHINGTON, DC 20037

EXAMINER

ART UNIT	PAPER NUMBER
2628	

NOTIFICATION DATE	DELIVERY MODE
09/08/2011	ELECTRONIC

Please find below and/or attached an Office communication concerning this application or proceeding.

The time period for reply, if any, is set in the attached communication.

Notice of the Office communication was sent electronically on above-indicated "Notification Date" to the following e-mail address(es):

sughrue@sughrue.com
PPROCESSING@SUGHRUE.COM
USPTO@SUGHRUE.COM

UNITED STATES PATENT AND TRADEMARK OFFICE

Commissioner for Patents
United States Patent and Trademark Office
P.O. Box 1450
Alexandria, VA 22313-1450
www.uspto.gov

SUGHRUE MION, PLLC
2100 PENNSYLVANIA AVENUE, N.W.
SUITE 800
WASHINGTON DC 20037

In re Application of	
NAKAMURA et al.	**: DECISION ON REQUEST TO**
Application No.: 13/147,932	**: PARTICIPATE IN THE PATENT**
Filed: 04 August 2011	**: PROSECUTION HIGHWAY**
Attorney Docket No.: Q125931	**: PROGRAM AND PETITION**
For: THREE-DIMENSIONAL IMAGE OUTPUT DEVICE AND THREE-DIMENSIONAL IMAGE OUTPUT METHOD	**: TO MAKE SPECIAL UNDER : 37 CFR 1.102(a)**

This is a decision on the request to participate in the Patent Prosecution Highway (PPH) program and the petition under 37 CFR 1.102(a), filed 17 August 2011, to make the above-identified application special.

The request and petition are **GRANTED**.

Discussion

A grantable request to participate in the PPH pilot program and petition to make special require:

1. The U.S. application is

    a. a Paris Convention application which either
        i. validly claims priority under 35 U.S.C. 119(a) and 37 CFR 1.55 to one or more applications filed in the JPO, or
        ii. validly claims priority to a PCT application that contains no priority claims, or

    b. a national stage application under the PCT (an application which entered the national stage in the U.S. from a PCT international application after compliance with 35 U.S.C. 371), which PCT application
        i. validly claims priority to an application filed in the JPO, or
        ii. validly claims priority to a PCT application that contains no priority claims, or
        iii. contains no priority claim, or

    c. a so-called bypass application filed under 35 U.S.C. 111(a) which validly claims benefit under 35 U.S.C. 120 to a PCT application, which PCT application
        i. validly claims priority to an application filed in the JPO, or

ii. validly claims priority to a PCT application that contains no priority claims, or
iii. contains no priority claim;

2. Applicant must submit a copy of:
   a. The allowable/patentable claim(s) from the JPO application(s);
   b. An English translation of the allowable/patentable claim(s) and
   c. A statement that the English translation is accurate;
3. Applicant must:
   a. Ensure all the claims in the U.S. application must sufficiently correspond or be amended to sufficiently correspond to the allowable/patentable claim(s) in the JPO application(s) and
   b. Submit a claims correspondence table in English;
4. Examination of the U.S. application has not begun;
5. Applicant must submit:
   a. Documentation of prior office action:
      i. a copy of the office action(s) just prior to the "Decision to Grant a Patent" from each of the JPO application(s) containing the allowable/patentable claim(s) or
      ii. if the allowable/patentable claims(s) are from a "Notification of Reasons for Refusal" then the Notification of Reasons for Refusal or
      iii. if the JPO application is a first action allowance then no office action from the JPO is necessary should be indicated on the request/petition form;
   b. An English language translation of the JPO Office action from (5)(a)(i)-(ii) above
   c. A statement that the English translation is accurate;
6. Applicant must submit:
   a. An IDS listing the documents cited by the JPO examiner in the JPO office action (unless already submitted in this application)
   b. Copies of the documents except U.S. patents or U.S. patent application publications (unless already submitted in this application);

The request to participate in the PPH pilot program and petition comply with the above requirements. Accordingly, the above-identified application has been accorded "special" status.

Inquiries concerning this decision should be directed to Lee W. Young at 571-272-4549.

All other inquiries concerning the examination or status of the application is accessible in the PAIR system at http://www.uspto.gov/ebc.index.html.

This application will be forwarded to the examiner for action on the merits commensurate with this decision once this application's formality reviews have been completed.

Lee W. Young
TQAS, Technology Center 2600

UNITED STATES PATENT AND TRADEMARK OFFICE

UNITED STATES DEPARTMENT OF COMMERCE
United States Patent and Trademark Office
Address: COMMISSIONER FOR PATENTS
P.O. Box 1450
Alexandria, Virginia 22313-1450
www.uspto.gov

APPLICATION NO.	FILING DATE	FIRST NAMED INVENTOR	ATTORNEY DOCKET NO.	CONFIRMATION NO.
13/147,932	08/04/2011	Satoshi Nakamura	Q125931	7394

23373 7590 09/14/2011
SUGHRUE MION, PLLC
2100 PENNSYLVANIA AVENUE, N.W.
SUITE 800
WASHINGTON, DC 20037

EXAMINER

ART UNIT	PAPER NUMBER
2628	

NOTIFICATION DATE	DELIVERY MODE
09/14/2011	ELECTRONIC

Please find below and/or attached an Office communication concerning this application or proceeding.

The time period for reply, if any, is set in the attached communication.

Notice of the Office communication was sent electronically on above-indicated "Notification Date" to the following e-mail address(es):

sughrue@sughrue.com
PPROCESSING@SUGHRUE.COM
USPTO@SUGHRUE.COM

UNITED STATES PATENT AND TRADEMARK OFFICE

Commissioner for Patents
United States Patent and Trademark Office
P.O. Box 1450
Alexandria, VA 22313-1450
www.uspto.gov

SUGHRUE MION, PLLC
2100 PENNSYLVANIA AVENUE, N.W.
SUITE 800
WASHINGTON DC 20037

In re Application of	
NAKAMURA et al.	**: DECISION ON REQUEST TO**
Application No.: 13/147,932	**: PARTICIPATE IN THE PATENT**
Filed: 04 August 2011	**: PROSECUTION HIGHWAY**
Attorney Docket No.: Q125931	**: PROGRAM AND PETITION**
For: THREE-DIMENSIONAL IMAGE OUTPUT DEVICE AND THREE-DIMENSIONAL IMAGE OUTPUT METHOD	**: TO MAKE SPECIAL UNDER : 37 CFR 1.102(a)**

This is a decision on the request to participate in the Patent Prosecution Highway (PPH) program and the petition under 37 CFR 1.102(a), filed 17 August 2011, to make the above-identified application special.

The request and petition are **GRANTED**.

Discussion

A grantable request to participate in the PPH pilot program and petition to make special require:

1. The U.S. application is

    a. a Paris Convention application which either
        i. validly claims priority under 35 U.S.C. 119(a) and 37 CFR 1.55 to one or more applications filed in the JPO, or
        ii. validly claims priority to a PCT application that contains no priority claims, or
    b. a national stage application under the PCT (an application which entered the national stage in the U.S. from a PCT international application after compliance with 35 U.S.C. 371), which PCT application
        i. validly claims priority to an application filed in the JPO, or
        ii. validly claims priority to a PCT application that contains no priority claims, or
        iii. contains no priority claim, or
    c. a so-called bypass application filed under 35 U.S.C. 111(a) which validly claims benefit under 35 U.S.C. 120 to a PCT application, which PCT application
        i. validly claims priority to an application filed in the JPO, or

ii. validly claims priority to a PCT application that contains no priority claims, or
iii. contains no priority claim;

2. Applicant must submit a copy of:
   a. The allowable/patentable claim(s) from the JPO application(s);
   b. An English translation of the allowable/patentable claim(s) and
   c. A statement that the English translation is accurate;
3. Applicant must:
   a. Ensure all the claims in the U.S. application must sufficiently correspond or be amended to sufficiently correspond to the allowable/patentable claim(s) in the JPO application(s) and
   b. Submit a claims correspondence table in English;
4. Examination of the U.S. application has not begun;
5. Applicant must submit:
   a. Documentation of prior office action:
      i. a copy of the office action(s) just prior to the "Decision to Grant a Patent" from each of the JPO application(s) containing the allowable/patentable claim(s) or
      ii. if the allowable/patentable claims(s) are from a "Notification of Reasons for Refusal" then the Notification of Reasons for Refusal or
      iii. if the JPO application is a first action allowance then no office action from the JPO is necessary should be indicated on the request/petition form;
   b. An English language translation of the JPO Office action from (5)(a)(i)-(ii) above
   c. A statement that the English translation is accurate;
6. Applicant must submit:
   a. An IDS listing the documents cited by the JPO examiner in the JPO office action (unless already submitted in this application)
   b. Copies of the documents except U.S. patents or U.S. patent application publications (unless already submitted in this application);

The request to participate in the PPH pilot program and petition comply with the above requirements. Accordingly, the above-identified application has been accorded "special" status.

Inquiries concerning this decision should be directed to Lee W. Young at 571-272-4549.

All other inquiries concerning the examination or status of the application is accessible in the PAIR system at http://www.uspto.gov/ebc.index.html.

This application will be forwarded to the examiner for action on the merits commensurate with this decision once this application's formality reviews have been completed.

Lee W. Young
TQAS, Technology Center 2600

UNITED STATES PATENT AND TRADEMARK OFFICE

Commissioner for Patents
United States Patent and Trademark Office
P.O. Box 1450
Alexandria, VA 22313-1450
www.uspto.gov

MAILED

SEP 16 2011

PCT LEGAL ADMINISTRATION

E I DU PONT DE NEMOURS AND COMPANY
LEGAL PATENT RECORDS CENTER
BARLEY MILL PLAZA 25/1125
4417 LANCASTER PIKE
WILMINGTON DE 19805

In re Application of :
LOH et al. :
Application No.: 13/147,962 :
PCT No.: PCT/US2010/022506 :
Int. Filing Date: 29 January 2010 :
Priority Date: 03 February 2009 :
Attorney Docket No.: FL1495USPCT :
For: FOAM-FORMING COMPOSITIONS CONTAINING MIXTURES OF CIS-1,1,1,4,4,4-HEXAFLUORO-2-BUTENE AND . . . . . .

DECISION ON PETITION
UNDER 37 CFR 1.137(b)

The petition to revive under 37 CFR 1.137(b) filed 04 August 2011 in the above-captioned application is hereby GRANTED as follows:

Applicants' statement that "the entire delay in filing the required reply from the due date for the reply until the filing of a grantable petition under 37 CFR 1.137(b) was unintentional" meets the requirements of 37 CFR 1.137(b)(3).

A review of the application file reveals that applicants have submitted the basic national fee and the requirements of 37 CFR 1.137(b) have been satisfied. Therefore, the request to revive the application abandoned under 35 U.S.C. 371(d) is granted as to the National stage in the United States of America.

This application is being returned to the United States Designated/Elected Office for processing in accordance with this decision

Anthony Smith
Attorney-Advisor
Office of PCT Legal Administration
Telephone: (571) 272-3298
Facsimile: (571) 273-0459

UNITED STATES PATENT AND TRADEMARK OFFICE

Commissioner for Patents
United States Patent and Trademark Office
P.O. Box 1450
Alexandria, VA 22313-1450
www.uspto.gov

MAILED

OCT 17 2011

PCT LEGAL ADMINISTRATION

CHRISTOPHER PAUL MITCHELL
888 16TH ST., NW
SUITE 800
WASHINGTON DC 20006

In re Application of Kwon Application No.: 13/147,976 PCT No.: PCT/KR2008/005932 Int. Filing Date: 09 October 2008 Priority Date: 10 October 2007 Attorney Docket No.: 0714.0259 For: Container With Anti-Loss And Anti-Idle Rotation Cap	DECISION ON PETITION

The petition to revive under 37 CFR 1.137(b) filed on 04 August 2011 in the above-captioned application is hereby **GRANTED** as follows:

Petitioner states that "the entire delay in filing the required reply from the due date for the required reply until the filing of a grantable petition under 37 C.F.R. 1.137(b) was unintentional." Said statement is being accepted in satisfaction of 37 CFR 1.137(b)(3).

A review of the application file reveals that applicant has paid the petition fee. The required reply has been filed. No terminal disclaimer is required. Therefore, the request to revive the application abandoned under 35 U.S.C. 371(d) is granted as to the national stage in the United States of America.

The surcharge under 37 CFR 1.492(h) is required. Although a fee authorization appears in the Transmittal Letter, insufficient funds are currently available.

This application is being returned to the Office of Patent Application Processing for further processing, including the preparation and mailing of a Notification of Missing Requirements (Form PCT/DO/EO/905) requiring the surcharge under 37 CFR 1.492(h).

/George Dombroske/
George Dombroske
PCT Legal Examiner
Office of PCT Legal Administration
Tel: (571) 272-3283

PTO/SB/20PCT-JP (05-10)
Approved for use through 01/31/2012. OMB 0651-0058
U.S. Patent and Trademark Office; U. S. DEPARTMENT OF COMMERCE
Under the Paperwork Reduction Act of 1995, no persons are required to respond to a collection of information unless it displays a valid OMB control number.

REQUEST FOR PARTICIPATION IN THE PATENT COOPERATION TREATY - PATENT PROSECUTION HIGHWAY (PCT-PPH) PILOT PROGRAM BETWEEN THE JAPAN PATENT OFFICE (JPO) AND THE USPTO

Application No:	13/147,992	Filing date:	August 4, 2011
First Named Inventor:	Junji Shimamura		
Title of the Invention:	HIGH STRENGTH STEEL PIPE FOR LOW-TEMPRATURE USAGE HAVING EXCELLENT BUCKLING RESISTANCE AND TOUGHNESS OF WELDED HEAT AFFECTED ZONE AND METHOD FOR PDOCUING THE SAME		

THIS REQUEST FOR PARTICIPATION IN THE PCT-PPH PILOT PROGRAM ALONG WITH THE REQUIRED DOCUMENTS MUST BE SUBMITTED VIA EFS-WEB. INFORMATION REGARDING EFS-WEB IS AVAILABLE AT HTTP://WWW.USPTO.GOV/EBC/EFS_HELP.HTML

APPLICANT HEREBY REQUESTS PARTICIPATION IN THE PCT-PPH PROGRAM AND PETITIONS TO MAKE THE ABOVE-IDENTIFIED APPLICATION SPECIAL UNDER THE PCT-PPH PROGRAM.

The above-identified application is (1) a national stage entry of the corresponding PCT application, or (2) a national stage entry of another PCT application which claims priority to the corresponding PCT application, or (3) a national application that claims domestic/ foreign priority to the corresponding PCT application, or (4) a national application which forms the basis for the priority claim in the corresponding PCT application, or (5) a continuing application of a U.S. application that satisfies one of (1) to (4) above, or (6) a U.S. application that claims domestic benefit to a U.S. provisional application which forms the basis for the priority claim in the corresponding PCT application.

The corresponding PCT application number(s) is/are: PCT/JP2010/052118

The international date of the corresponding PCT application(s) is/are: February 5, 2010

I. List of Required Documents:

a. **A copy of the latest international work product (WO/ISA, WO/IPEA, or IPER) in the above–identified corresponding PCT application(s)**

☐ Is attached.

☑ Is not attached because the document is already in the U.S. application.

b. **A copy of all claims which were indicated as having novelty, inventive step and industrial applicability in the above-identified corresponding PCT application(s).**

☑ Is attached.

☐ Is not attached because the document is already in the U.S. application.

c. **English translations of the documents in a. and b. above are attached (if the documents are not in the English language). A statement that the English translation is accurate is attached for the document in b. above.**

This collection of information is required by 35 U.S.C. 119, 37 CFR 1.55, and 37 CFR 1.102(d). The information is required to obtain or retain a benefit by the public, which is to file (and by the USPTO to process) an application. Confidentiality is governed by 35 U.S.C. 122 and 37 CFR 1.11 and 1.14. This collection is estimated to take 2 hours to complete, including gathering, preparing, and submitting the completed application form to the USPTO. Time will vary depending upon the individual case. Any comments on the amount of time you require to complete this form and/or suggestions for reducing this burden should be sent to the Chief Information Officer, U.S. Patent and Trademark Office, U.S. Department of Commerce, P.O. Box 1450, Alexandria, VA 22313-1450. DO NOT SEND FEES OR COMPLETED FORMS TO THIS ADDRESS.

Approved for use through 01/31/2012. OMB 0651-0058
U.S.Patent and Trademark Office; U.S. DEPARTMENT OF COMMERCE

Under the Paperwork Reduction Act of 1995, no persons are required to respond to a collection of information unless it displays a valid OMB control number.

REQUEST FOR PARTICIPATION IN THE PCT-PPH PILOT PROGRAM BETWEEN THE JPO AND THE USPTO

(continued)

Application No.:	13/147,992
First Named Inventor:	Junji Shimamura

d. **(1) An information disclosure statement listing the documents cited in the international work products (ISR, WO/ISA, WO/IPEA, IPER) of the corresponding PCT application.**

☐ Is attached

☑ Has already been filed in the above-identified U.S. application on August 4, 2011, January 3, 2012 and February 15, 2012

(2) Copies of all documents (except) for U.S. patents or U.S. patent application publications)

☐ Are attached.

☑ Have already been filed in the above-identified U.S. application on August 4, 2011, January 3, 2012 and February 15, 2012

II. Claims Correspondence Table:

Claims in US Application	Patentable Claims in the corresponding PCT Application	Explanation regarding the correspondence
1 and 2	1 and 2	
3 and 11	3	Multiple dependent Claim 3 removed dependency from Claims 1 and 2
4 and 12-13	4	Multiple dependent Claim 4 removed dependency from Claims 2 through 3
5 and 14-15	5	Multiple dependent Claim 5 removed dependency from Claims 1 through 4
6 and 17	6	Multiple dependent Claim 6 removed dependency from Claims 4 and 5
7 and 18-20	7	Multiple dependent Claim 7 removed dependency from Claims 1 through 5
8	8	
9	9	Multiple dependent Claim 9 removed dependency from Claims 7 and 8
10	10	

III. All the claims in the US application sufficiently correspond to the patentable claims in the corresponding PCT application.

Signature /TDC/	Date March 19, 2012
Name (Print/Typed) T. Daniel Christenbury	Registration Number 31,750

PTO/SB/20PCT-JP (05-10)
Approved for use through 01/31/2012. OMB 0651-0058
U.S. Patent and Trademark Office; U. S. DEPARTMENT OF COMMERCE
Under the Paperwork Reduction Act of 1995, no persons are required to respond to a collection of information unless it displays a valid OMB control number.

REQUEST FOR PARTICIPATION IN THE PATENT COOPERATION TREATY - PATENT PROSECUTION HIGHWAY (PCT-PPH) PILOT PROGRAM BETWEEN THE JAPAN PATENT OFFICE (JPO) AND THE USPTO

Application No:	13/147,998	Filing date:	4 August 2011
First Named Inventor:	Katsumi KOZU		
Title of the Invention:	BATTERY MODULE		

THIS REQUEST FOR PARTICIPATION IN THE PCT-PPH PILOT PROGRAM ALONG WITH THE REQUIRED DOCUMENTS MUST BE SUBMITTED VIA EFS-WEB. INFORMATION REGARDING EFS-WEB IS AVAILABLE AT HTTP://WWW.USPTO.GOV/EBC/EFS_HELP.HTML

APPLICANT HEREBY REQUESTS PARTICIPATION IN THE PCT-PPH PROGRAM AND PETITIONS TO MAKE THE ABOVE-IDENTIFIED APPLICATION SPECIAL UNDER THE PCT-PPH PROGRAM.

The above-identified application is (1) a national stage entry of the corresponding PCT application, or (2) a national stage entry of another PCT application which claims priority to the corresponding PCT application, or (3) a national application that claims domestic/ foreign priority to the corresponding PCT application, or (4) a national application which forms the basis for the priority claim in the corresponding PCT application, or (5) a continuing application of a U.S. application that satisfies one of (1) to (4) above, or (6) a U.S. application that claims domestic benefit to a U.S. provisional application which forms the basis for the priority claim in the corresponding PCT application.

The corresponding PCT application number(s) is/are: PCT/JP2010/006638

The international date of the corresponding PCT application(s) is/are: November 11, 2010

I. List of Required Documents:

a. **A copy of the latest international work product (WO/ISA, WO/IPEA, or IPER) in the above–identified corresponding PCT application(s)**

☑ Is attached.

☐ Is not attached because the document is already in the U.S. application.

b. **A copy of all claims which were indicated as having novelty, inventive step and industrial applicability in the above-identified corresponding PCT application(s).**

☑ Is attached.

☐ Is not attached because the document is already in the U.S. application.

c. **English translations of the documents in a. and b. above are attached (if the documents are not in the English language). A statement that the English translation is accurate is attached for the document in b. above.**

This collection of information is required by 35 U.S.C. 119, 37 CFR 1.55, and 37 CFR 1.102(d). The information is required to obtain or retain a benefit by the public, which is to file (and by the USPTO to process) an application. Confidentiality is governed by 35 U.S.C. 122 and 37 CFR 1.11 and 1.14. This collection is estimated to take 2 hours to complete, including gathering, preparing, and submitting the completed application form to the USPTO. Time will vary depending upon the individual case. Any comments on the amount of time you require to complete this form and/or suggestions for reducing this burden should be sent to the Chief Information Officer, U.S. Patent and Trademark Office, U.S. Department of Commerce, P.O. Box 1450, Alexandria, VA 22313-1450. DO NOT SEND FEES OR COMPLETED FORMS TO THIS ADDRESS.

Approved for use through 01/31/2012. OMB 0651-0058
U.S.Patent and Trademark Office; U.S. DEPARTMENT OF COMMERCE
Under the Paperwork Reduction Act of 1995, no persons are required to respond to a collection of information unless it displays a valid OMB control number.

REQUEST FOR PARTICIPATION IN THE PCT-PPH PILOT PROGRAM BETWEEN THE JPO AND THE USPTO

(continued)

Application No.:	13/147,998
First Named Inventor:	Katsumi KOZU

d. **(1) An information disclosure statement listing the documents cited in the international work products (ISR, WO/ISA, WO/IPEA, IPER) of the corresponding PCT application.**

☐ Is attached

☑ Has already been filed in the above-identified U.S. application on 4 August 2011

(2) Copies of all documents (except) for U.S. patents or U.S. patent application publications)

☐ Are attached.

☑ Have already been filed in the above-identified U.S. application on 4 August 2011

II. Claims Correspondence Table:

Claims in US Application	Patentable Claims in the corresponding PCT Application	Explanation regarding the correspondence
1-29 cancelled	-	-
30	1 + 7 + 8 + 9	PCT claim 9 was indicated as having novelty and industrial applicability
31	3	same, except 31 depends from claim 30, amended to include PCT claim 9
32	5	same, except 32 depends from claim 30, amended to include PCT claim 9
33	6	same, except 33 depends from claim 30, amended to include PCT claim 9
34	10	same, except 34 depends from claim 30, amended to include PCT claim 9
35	15	same, except 35 depends from claim 30, amended to include PCT claim 9
36	16 + 20 + 26 + 27	PCT claims 26 and 27 were indicated as having novelty and industrial applicability
37	17	same, except 37 depends from claim 36, amended to include PCT claims 26 and 27
38	18	same, except 38 depends from claim 36, amended to include PCT claims 26 and 27
39	19	same, except 39 depends from claim 36, amended to include PCT claims 26 and 27
40	22	same, except 40 depends from claim 36, amended to include PCT claims 26 and 27
41	24	same, except 41 depends from claim 36, amended to include PCT claims 26 and 27
42	25	same, except 42 depends from claim 36, amended to include PCT claims 26 and 27
43	28	same, except 43 depends from claim 36, amended to include PCT claims 26 and 27
44	29	same, except 44 depends from claim 36, amended to include PCT claims 26 and 27

III. All the claims in the US application sufficiently correspond to the patentable claims in the corresponding PCT application.

Signature	Date August 12, 2011
Name (Print/Typed) Michael E. Fogarty	Registration Number 36,139

WRITTEN OPINION OF THE INTERNATIONAL SEARCHING AUTHORITY

International application No. PCT/JP2010/006638

Box No. V

1. Statement

Novelty (N)	Claims 2, 5, 7-15, 17-29	YES
	Claims 1, 3, 4, 6, 16	NO
Inventive step (IS)	Claims 9, 26-28	YES
	Claims 1-8, 10-25, 29	NO
Industrial applicability (IA)	Claims 1-29	YES
	Claims	NO

2. Citations and Explanation:

Citation 1: **JP10-106521 A** (Matsushita Electric Industrial Co., Ltd.) 1998.04.24, full text, FIGS. 1-7 (no family)

Citation 2: **JP2006-156404 A** (Samsung SDI Co., Ltd.) 2006.06.15, full text, FIGS. 1-10 & US2006/0113965 A1 & KR10-2006-0060816 A & KR10-2006-0103630 A & CN1808752 A

Citation 3: **JP2000-268791 A** (Toshiba Battery Co., Ltd.) 2000.09.29, full text, FIGS. 1-9 & JP2001-118551 A & JP2001-135290 A & JP2001-135287 A & JP2001-155701 A & US6428925 B1 & EP1035599 A1 & DE60014474 D & DE60014474 T & NO20001282 A & TW463402 B & DK1035599 T & HK1033616 A & CN1267093 A & NO20001282 D0

Citation 4: **JP2006-128007 A** (Sanyo Electric Co., Ltd.) 2006.05.18, full text, FIGS. 1-10 (no family)

Citation 5: **WO2008/018374 A1** (Calsonic Kansei Corporation) 2008.02.14, full text, FIGS. 1-15
& JP2008-44476 A & JP2008-54379 A

Citation 6: **JP2008-124033 A** (Takehiro Co., Ltd.) 2008.05.29, full text, FIGS. 1-17 & JP2007-294407 A

Citation 7: **WO2009/102014 A1** (Calsonic Kansei Corporation) 2009.08.20, full text, FIGS. 1-19

& JP2009-193832 A

Citation 8: **JP2009-140786 A** (Sekisui Chemical Co., Ltd.) 2009.06.25, full text, FIG. 1 (no family)

Citation 9: **JP2002-291670 A** (Toshiba Corporation) 2002.10.08, full text, FIGS. 1-7 (no family)

Citation 10: **WO2008/034584 A1** (Magna Steyr Fahrzeugtechnik Aktiengesellschaft & Company Kommanditgesellschaft) 2008.03.27, full text, FIGS. 1-10
& JP2010-503976 A & US2010/0028764 A & EP2067206 A & DE102007043947 A
& DE112007002188 A & AT9922 U & KR10-2009-0043566 A & CN101536245 A

Citation 11: **JP2000-58016 A** (Toshiba Battery Co., Ltd.) 2000.02.25, full text, FIGS. 1-10 (no family)

Claims 1, 3, 4, and 6

Novelty and inventive step of claims 1, 3, 4, and 6 are denied by Citations 1-4.

Cells described in Citations 1-4 are pressed by a certain force onto a holder which functions as a radiator for thermal conduction. Thus, there is no substantial difference between the invention of claims 1, 3, 4, and 6 and the inventions of Citations 1-4.

Claims 2, 7, and 8

Inventive step of claims 2, 7, and 8 is denied by Citations 1-4.

Those skilled in the art would have easily connected the cells in parallel in accordance with the required battery capacity, and have used gas (air) or liquid as a cooling medium in accordance with the required cooling capability in the invention of Citations 1-4.

Claims 10-23, 25, and 29

Inventive step of claims 10-23, 25, and 29 is denied by Citations 1-4, and 7-9.

Citations 7-9 describe that a latent heat storage medium (phase change element) as a member for cooling lithium batteries etc. Thus, those skilled in the art would have easily used the latent heat storage medium as the cooling member in the inventions of Citations 1-4.

As described in Citation 7 (paragraph [0019]), increase in battery temperature has to be controlled not to deteriorate the battery, and not to shorten the battery life. Thus, those skilled in the art would have easily set a melting point of the latent heat storage medium (phase change element) not to exceed a temperature at which the battery is deteriorated to shorten the battery life.

Further, those skilled in the art would have easily connected the cells in serial parallel in accordance with the required battery voltage and battery capacity.

Claims 1, 2, 4, 5, 7, and 8

Inventive step of claims 1, 2, 4, 5, 7, and 8 is denied by Citations 5 and 6.

Citation 5 does not describe that a battery 2 is pressed onto a battery case 1. However, Citation 6 describes that batteries constituting a battery module are pressed by an elastic member to improve resistance to pressure, cooling capability, and resistance to vibration. Thus, those skilled in the art would have easily employed the technology of Citation 6 in the invention of Citation 5.

Further, those skilled in the art would have easily used gas (air) or liquid as a cooling medium in accordance with the required cooling capability in the invention of Citation 5.

Claim 16

Novelty and inventive step of claim 16 are denied by Citation 7.

Citation 7 (FIG. 3) describes a battery cooling system including a case 2 for containing a plurality of batteries 3, and a cool storage 6 including a storage medium 61 arranged in the case 2. The storage medium 61 is not in contact with the batteries 3, and is thermally connected to the batteries 3 through the case 2.

Claims 17-19

Inventive step of claims 17-19 is denied by Citations 7-9.

Citations 8 and 9 describe that various types of latent heat storage mediums (phase change elements) are used a member for cooling the batteries. As described in Citation 7 (FIG. 3), increase in battery temperature has to be controlled not to deteriorate the battery, and not to shorten the battery life. Thus, those skilled in the art would have easily set a melting point of the latent heat storage medium (phase change element) not to exceed a temperature at which the battery is deteriorated to shorten the battery life.

Claims 20-24, 29

Inventive step of claims 20-24, and 29 is denied by Citations 6-9.

Citation 7 does not describe that the batteries 3 are pressed onto the battery case 2. However, Citation 6 describes that batteries constituting a battery module are pressed by an elastic member to improve resistance to pressure, cooling capability, and resistance to vibration. Thus, those skilled in the art would have easily employed the technology of Citation 6 in the invention of Citation 7.

Those skilled in the art would have easily connected the cells in serial parallel in accordance with the required battery voltage and battery capacity in the invention of Citation 7.

Claims 9, and 26-28

The invention of claims 9, and 26-28 is not described in any of Citations 1-11, and is not obvious to those skilled in the art.

特許協力条約

発信人　日本国特許庁（国際調査機関）

前田
11.2.16
特許

代理人
前田弘
様

あて名
〒541-0053
日本国大阪府大阪市中央区本町２丁目５番７号
大阪丸紅ビル

ＰＣＴ
国際調査機関の見解書
（法施行規則第40条の2）
［ＰＣＴ規則43の2.1］

発送日 （日.月.年）　１５．０２．２０１１	
出願人又は代理人の書類記号　P597281P0	今後の手続きについては、下記２を参照すること。

国際出願番号	国際出願日	優先日
ＰＣＴ／ＪＰ２０１０／００６６３８	（日.月.年）　１１．１１．２０１０	（日.月.年）　２５．１１．２００９

国際特許分類（ＩＰＣ）Int.Cl. H01M10/50(2006.01)i, H01M2/10(2006.01)i

出願人（氏名又は名称）
パナソニック株式会社

１．この見解書は次の内容を含む。

- ☑ 第Ⅰ欄　見解の基礎
- ☐ 第Ⅱ欄　優先権
- ☐ 第Ⅲ欄　新規性、進歩性又は産業上の利用可能性についての見解の不作成
- ☐ 第Ⅳ欄　発明の単一性の欠如
- ☑ 第Ⅴ欄　ＰＣＴ規則43の2.1(a)(i)に規定する新規性、進歩性又は産業上の利用可能性についての見解、それを裏付けるための文献及び説明
- ☐ 第Ⅵ欄　ある種の引用文献
- ☐ 第Ⅶ欄　国際出願の不備
- ☐ 第Ⅷ欄　国際出願に対する意見

２．今後の手続き

国際予備審査の請求がされた場合は、出願人がこの国際調査機関とは異なる国際予備審査機関を選択し、かつ、その国際予備審査機関がＰＣＴ規則66.1の2(b)の規定に基づいて国際調査機関の見解書を国際予備審査機関の見解書とみなさない旨を国際事務局に通知していた場合を除いて、この見解書は国際予備審査機関の最初の見解書とみなされる。

この見解書が上記のように国際予備審査機関の見解書とみなされる場合、様式ＰＣＴ／ＩＳＡ／２２０を送付した日から３月又は優先日から２２月のうちいずれか遅く満了する期限が経過するまでに、出願人は国際予備審査機関に、適当な場合は補正書とともに、答弁書を提出することができる。

さらなる選択肢は、様式ＰＣＴ／ＩＳＡ／２２０を参照すること。

３．さらなる詳細は、様式ＰＣＴ／ＩＳＡ／２２０の備考を参照すること。

見解書を作成した日
０３．０２．２０１１

名称及びあて先	特許庁審査官（権限のある職員）	４Ｋ	９１７１
日本国特許庁（ＩＳＡ／ＪＰ） 郵便番号１００－８９１５ 東京都千代田区霞が関三丁目４番３号	長谷山　健 電話番号　０３－３５８１－１１０１　内線　３４３５		

国際調査機関の見解書

国際出願番号　PCT／JP2010／006638

第Ⅰ欄　見解の基礎

1．言語に関し、この見解書は以下のものに基づき作成した。

☑ 出願時の言語による国際出願

☐ 出願時の言語から国際調査のための言語である _____ 語に翻訳された、この国際出願の翻訳文（PCT規則12.3(a)及び23.1(b)）

2．☐ この見解書は、PCT規則91の規定により国際調査機関が認めた又は国際調査機関に通知された明らかな誤りの訂正を考慮して作成した（PCT規則43の2.1(b)）。

3．この国際出願で開示されたヌクレオチド又はアミノ酸配列に関して、提出された以下の配列表に基づき見解書を作成した。

a．提出手段　☐ 紙形式

☐ 電子形式

b．提出時期　☐ 出願時の国際出願に含まれていたもの

☐ この国際出願と共に電子形式により提出されたもの

☐ 出願後に、調査のために、この国際調査機関に提出されたもの

4．☐ さらに、複数の版の配列表又は配列表の写しを提出した場合、出願後に提出した配列の写し若しくは追加して提出した配列の写しが、出願時に提出した配列と同一である旨又は出願時の開示を超える事項を含まない旨の陳述書の提出があった。

5．補足意見：

国際調査機関の見解書

国際出願番号 PCT／JP2010／006638

第V欄 新規性、進歩性又は産業上の利用可能性についてのPCT規則43の2.1(a)(i)に定める見解、それを裏付ける文献及び説明

1. 見解

新規性（N）	請求項	2，5，7－15，17－29	有
	請求項	1，3，4，6，16	無
進歩性（IS）	請求項	9，26－28	有
	請求項	1－8，10－25，29	無
産業上の利用可能性（IA）	請求項	1－29	有
	請求項		無

2. 文献及び説明

文献 1: **JP 10-106521 A** (松下電器産業株式会社) 1998.04.24, 全文, 第 1-7 図
(ファミリーなし)

文献 2: **JP 2006-156404 A** (三星エスディアイ株式会社) 2006.06.15, 全文, 第 1-10 図
& US 2006/0113965 A1 & KR 10-2006-0060816 A & KR 10-2006-0103630 A
& CN 1808752 A

文献 3: **JP 2000-268791 A** (東芝電池株式会社) 2000.09.29, 全文, 第 1-9 図
& JP 2001-118551 A & JP 2001-135290 A & JP 2001-135287 A
& JP 2001-155701 A & US 6428925 B1 & EP 1035599 A1 & DE 60014474 D
& DE 60014474 T & NO 20001282 A & TW 463402 B & DK 1035599 T
& HK 1033616 A & CN 1267093 A & NO 20001282 D0

文献 4: **JP 2006-128007 A** (三洋電機株式会社) 2006.05.18, 全文, 第 1-10 図
(ファミリーなし)

文献 5: **WO 2008/018374 A1** (カルソニックカンセイ株式会社) 2008.02.14, 全文, 第 1-15 図
& JP 2008-44476 A & JP 2008-54379 A

文献 6: **JP 2008-124033 A** (株式会社タケヒロ) 2008.05.29, 全文, 第 1-17 図
& JP 2007-294407 A

文献 7: **WO 2009/102014 A1** (カルソニックカンセイ株式会社) 2009.08.20, 全文, 第 1-19 図
& JP 2009-193832 A

文献 8: **JP 2009-140786 A** (積水化学工業株式会社) 2009.06.25, 全文, 第 1 図
(ファミリーなし)

(補充欄に続く)

補充欄

いずれかの欄の大きさが足りない場合

第 V2. 欄の続き

文献 9: JP 2002-291670 A (株式会社東芝) 2002.10.08, 全文, 第 1-7 図 (ファミリーなし)

文献 10: WO 2008/034584 A1 (マグナ・シュタイユ・フアールツオイクテヒニク・アクチエンゲゼルシヤフト・ウント・コンパニー・コマンデイトゲゼルシヤフト) 2008.03.27, 全文, 第 1-10 図
& JP 2010-503976 A & US 2010/0028764 A & EP 2067206 A & DE 102007043947 A & DE 112007002188 A & AT 9922 U & KR 10-2009-0043566 A & CN 101536245 A

文献 11: JP 2000-58016 A (東芝電池株式会社) 2000.02.25, 全文, 第 1-10 図 (ファミリーなし)

請求項 1, 3, 4, 6

請求項 1, 3, 4, 6 に係る発明は、文献 1-4 により新規性及び進歩性を有さない。

文献 1-4 に記載された発明における単電池は、熱伝導のために放熱体として機能するホルダに一定程度の力で押圧されているものと判断されるから、上記請求項に係る発明と文献 1-4 に記載された発明との間に、発明特定事項の実質的な差異を認めることはできない。

請求項 2, 7, 8

請求項 2, 7, 8 に係る発明は、文献 1-4 により進歩性を有さない。

文献 1-4 に記載された発明において、必要する電池容量に応じて単電池を並列に接続することや、必要とする冷却性能に応じて冷却媒体として気体(空気)や液体を用いることは、当業者であれば容易になし得たことである。

請求項 10-23, 25, 29

請求項 10-23, 25, 29 に係る発明は、文献 1-4, 7-9 により進歩性を有さない。

文献 7-9 には、リチウム電池等の冷却手段として潜熱蓄熱材(相変化部材)を用いることが記載されているから、文献 1-4 に記載された発明における冷却手段として潜熱蓄熱材(相変化部材)を用いることは、当業者であれば容易になし得たことである。

また、文献 7(段落[0019])にも記載されているように、電池の温度上昇は電池が劣化し、電池寿命を短くするほどにはならないように配慮すべきであるから、文献 1-4 に記載された発明における冷却手段として潜熱蓄熱材(相変化部材)を用いる際に、潜熱蓄熱材(相変化部材)の融点を電池の劣化によって電池寿命が短くならないような温度を超えないように設定することも、当業者であれば容易になし得たことである。

さらに、文献 1-4 に記載された発明において、必要とする電池電圧と電池容量に応じて単電池を直並列に接続することも、当業者であれば容易になし得たことである。

(補充欄に続く)

補充欄

いずれかの欄の大きさが足りない場合

第 V2. 欄の続き

請求項 1, 2, 4, 5, 7, 8

請求項 1, 2, 4, 5, 7, 8 に係る発明は、文献 5, 6 により進歩性を有さない。

文献 5 に記載された発明では、バッテリ 2 がバッテリケース 1 に押圧されていないが、文献 6 には、弾性部材を用いて電池モジュールを形成する単電池を押圧することにより、耐圧性能、冷却性能、対振性を高める技術が記載されているから、文献 5 に記載された発明において上記技術を採用することは、当業者であれば容易になし得たことである。

また、文献 5 に記載された発明において、必要とする冷却性能に応じて冷却媒体として気体(空気)や液体を用いることも、当業者であれば容易になし得たことである。

請求項 16

請求項 16 に係る発明は、文献 7 により新規性及び進歩性を有さない。

文献 7(第 3 図)には、複数のバッテリ 3 を保持するケース 2 と、ケース 2 に配設された蓄冷材 61 を有する蓄冷部 6 を備え、蓄冷材 61 はバッテリ 3 とは接触しておらず、ケース 2 を介してバッテリ 3 と熱的に接続されているバッテリ冷却システムが記載されている。

請求項 17-19

請求項 17-19 に係る発明は、文献 7-9 により進歩性を有さない。

文献 8, 9 には、電池の冷却手段として各種の潜熱蓄熱材(相変化部材)を用いることが記載されており、文献 7(段落[0019])にも記載されているように、電池の温度上昇は電池が劣化し、電池寿命を短くするほどにはならないように配慮すべきであるから、文献 7 に記載された発明における潜熱蓄熱材(相変化部材)として、融点が電池の劣化によって電池寿命が短くならないような温度を超えないものを選択することは、当業者であれば容易になし得たことである。

請求項 20-24, 29

請求項 20-24, 29 に係る発明は、文献 6-9 により進歩性を有さない。

文献 7 に記載された発明では、バッテリ 3 がバッテリケース 2 に押圧されていないが、文献 6 には、弾性部材を用いて電池モジュールを形成する単電池を押圧することにより、耐圧性能、冷却性能、対振性を高める技術が記載されているから、文献 5 に記載された発明において上記技術を採用することは、当業者であれば容易になし得たことである。

また、文献 7 に記載された発明において、必要とする電池電圧と電池容量に応じて単電池を直並列に接続することも、当業者であれば容易になし得たことである。

請求項 9, 26-28

請求項 9, 26-28 に係る発明は、文献 1-11 のいずれにも記載されておらず、当業者にとって自明なものでもない。

CERTIFICATE OF TRANSLATION

I, the undersigned, hereby certify

that I am well acquainted with the English and Japanese languages,

that I prepared the attached document, and

that, to the best of my knowledge and belief, the attached document is an accurate translation of the International Patent Application PCT/JP2010-006638 filed on November 11, 2010.

I declare that all statements made herein of my own knowledge are true and that all statements made on information and belief are believed to be true.

Y. Oha

Yoshiko OHA

July 14, 2011
Date

Claims as filed

請求の範囲

[請求項1] 複数の柱状又は板状の素電池と、該素電池を保持するホルダとを備えた電池モジュールであって、

前記ホルダは、前記素電池を収容する筒状の収容部と、前記素電池の温度を調節する温度調節部と、前記素電池を該収容部の内周面へ押圧する押圧部とを有し、金属又は高熱伝導性樹脂で形成されており、

前記素電池は、前記押圧部で押圧されることによって、その外周面が前記収容部の内周面に接触している電池モジュール。

[請求項2] 請求項１に記載の電池モジュールにおいて、

前記複数の素電池は、並列に接続されている電池モジュール。

[請求項3] 請求項１又は２に記載の電池モジュールにおいて、

前記ホルダは、前記素電池が前記収容部の軸方向一端側から軸方向へ挿入されるように構成されている電池モジュール。

[請求項4] 請求項１乃至３の何れか１つに記載の電池モジュールにおいて、

前記押圧部は、前記素電池を弾性的に押圧する電池モジュール。

[請求項5] 請求項１乃至４の何れか１つに記載の電池モジュールにおいて、

前記ホルダは、前記収容部が形成されたホルダ本体を有し、

前記押圧部は、前記ホルダ本体と別体に構成されている電池モジュール。

[請求項6] 請求項１乃至４の何れか１つに記載の電池モジュールにおいて、

前記ホルダは、前記収容部が形成されたホルダ本体を有し、

前記押圧部は、前記ホルダ本体と一体に構成されている電池モジュール。

[請求項7] 請求項１乃至６の何れか１つに記載の電池モジュールにおいて、

前記温度調節部は、前記ホルダに形成され、該ホルダを空冷するための冷媒流路である電池モジュール。

[請求項8] 請求項１乃至６の何れか１つに記載の電池モジュールにおいて、

前記温度調節部は、前記ホルダに形成され、該ホルダを液冷するた

めの冷媒流路である電池モジュール。

[請求項9] 請求項７又は８に記載の電池モジュールにおいて、

前記押圧部は、前記冷媒流路を区画する壁部で構成されている電池モジュール。

[請求項10] 請求項１乃至６の何れか１つに記載の電池モジュールにおいて、

前記温度調節部は、前記素電池の温度を吸熱して相変化する相変化部材である電池モジュール。

[請求項11] 請求項１０に記載の電池モジュールにおいて、

前記相変化部材は、前記素電池とは接触しておらず、前記ホルダを介して該素電池と熱的に接続されている電池モジュール。

[請求項12] 請求項１０又は１１に記載の電池モジュールにおいて、

前記相変化部材は、相変化温度が前記素電池の動作上限温度よりも高い電池モジュール。

[請求項13] 請求項１０乃至１２の何れか１つに記載の電池モジュールにおいて、

前記相変化部材は、前記素電池の温度を吸熱して固相から液相に相変化する電池モジュール。

[請求項14] 請求項１乃至１３の何れか１つに記載の電池モジュールにおいて、

前記相変化部材は、その相変化温度が前記素電池の許容上限温度よりも低い電池モジュール。

[請求項15] 請求項１、３乃至１４の何れか１つに記載の電池モジュールにおいて、

前記ホルダを複数備えており、

前記各ホルダにおいて、前記複数の素電池は、並列に接続されており、

一の前記ホルダに保持された前記複数の素電池は、他の前記ホルダに保持された前記複数の素電池と直列に接続されている電池モジュール。

[請求項16] 複数の素電池を備えた電池モジュールであって、

前記複数の素電池を保持するホルダと、

前記ホルダに配設されて、前記素電池の温度を吸熱して相変化する相変化部材をさらに備え、

前記相変化部材は、前記素電池とは接触しておらず、前記ホルダを介して該素電池と熱的に接続されている電池モジュール。

[請求項17] 請求項１６に記載の電池モジュールにおいて、

前記相変化部材は、相変化温度が前記素電池の動作上限温度よりも高い電池モジュール。

[請求項18] 請求項１６又は１７に記載の電池モジュールにおいて、

前記相変化部材は、前記素電池の温度を吸熱して固相から液相に相変化する電池モジュール。

[請求項19] 請求項１６乃至１８の何れか１つに記載の電池モジュールにおいて、

前記相変化部材は、その相変化温度が前記素電池の許容上限温度よりも低い電池モジュール。

[請求項20] 請求項１６乃至１９の何れか１つに記載の電池モジュールにおいて、

前記素電池は、柱状又は板状に形成されており、

前記ホルダは、前記素電池を収容する筒状の収容部と、前記素電池を該収容部の内周面へ押圧する押圧部とを有し、金属又は高熱伝導性樹脂で形成されており、前記素電池は、前記押圧部で押圧されることによって、その外周面が前記収容部の内周面に接触している電池モジュール。

[請求項21] 請求項２０に記載の電池モジュールにおいて、

前記複数の素電池は、並列に接続されている電池モジュール。

[請求項22] 請求項２０又は２１に記載の電池モジュールにおいて、

前記ホルダは、前記素電池が前記収容部の軸方向一端側から軸方向

へ挿入されるように構成されている電池モジュール。

[請求項23] 請求項２０乃至２２の何れか１つに記載の電池モジュールにおいて、

前記押圧部は、前記素電池を弾性的に押圧する電池モジュール。

[請求項24] 請求項２０乃至２３の何れか１つに記載の電池モジュールにおいて、

前記ホルダは、前記収容部が形成されたホルダ本体を有し、

前記押圧部は、前記ホルダ本体と別体に構成されている電池モジュール。

[請求項25] 請求項２０乃至２３の何れか１つに記載の電池モジュールにおいて、

前記ホルダは、前記収容部が形成されたホルダ本体を有し、

前記押圧部は、前記ホルダ本体と一体に構成されている電池モジュール。

[請求項26] 請求項２０乃至２５の何れか１つに記載の電池モジュールにおいて、

前記ホルダには、該ホルダを空冷するための冷媒流路が形成されている電池モジュール。

[請求項27] 請求項２０乃至２５の何れか１つに記載の電池モジュールにおいて、

前記ホルダには、該ホルダを液冷するための冷媒流路が形成されている電池モジュール。

[請求項28] 請求項２６又は２７に記載の電池モジュールにおいて、

前記押圧部は、前記冷媒流路を区画する壁部で構成されている電池モジュール。

[請求項29] 請求項２０、２２乃至２８の何れか１つに記載の電池モジュールにおいて、

前記ホルダを複数備えており、

前記各ホルダにおいて、前記複数の素電池は、並列に接続されており、

一の前記ホルダに保持された前記複数の素電池は、他の前記ホルダに保持された前記複数の素電池と直列に接続されている電池モジュール。

CLAIMS

1. (amended) A battery module comprising:

a plurality of substantially columnar or plate-shaped cells; and

a holder for holding the cells, wherein

the holder is made of metal or highly thermally conductive resin, and includes cylindrical container portions for containing the cells, respectively, a temperature adjusting portion for adjusting temperature of the cells, and pressing portions for pressing the cells toward inner circumferential surfaces of the container portions, respectively,

outer circumferential surfaces of the cells pressed by the pressing portions are in contact with the inner circumferential surfaces of the container portions, respectively,

the temperature adjusting portion is a refrigerant passage which is formed in the holder to air-cool or liquid-cool the holder, and

each of the pressing portions is comprised of a wall which forms the refrigerant passage.

2. (canceled)

3. (amended) The battery module of claim 1, wherein

the holder is configured to allow insertion of each of the cells from an axial end to the other axial end of the container portion.

4. (canceled)

5. (amended) The battery module of claim 1 or 3, wherein

the holder includes a holder body including the container portions, and the pressing portions are separate from the holder body.

6. (amended) The battery module of claim 1 or 3, wherein

the holder includes a holder body including the container portions, and

the pressing portions are integral with the holder body.

7. (canceled)

8. (canceled)

9. (canceled)

10. (amended) The battery module of any one of claims 1, 3, 5, and 6, wherein

the temperature adjusting portion is a phase change element which changes its phase by absorbing heat of the cells.

11. (canceled)

12. (canceled)

13. (canceled)

14. (canceled)

15. (amended) The battery module of any one of claims 1, 3, 5, and 6-10, further comprising:

multiple ones of the holder, wherein

the cells in each of the holders are connected in parallel, and

the cells held in one of the holders are connected in series to the cells held in the other one of the holders.

16. (amended) A battery module including a plurality of cells, the battery module comprising:

a holder for holding the plurality of cells; and

a phase change element which is arranged in the holder, and changes its phase by absorbing heat of the cells, wherein

the phase change element is not in contact with the cells, and is thermally connected to the cells through the holder,

the cells are columnar or plate-shaped,

the holder is made of metal or highly thermally conductive resin, and includes cylindrical container portions for containing the cells, respectively, and pressing portions for pressing the cells toward inner circumferential surfaces of the container portions,

outer circumferential surfaces of the cells pressed by the pressing portions are in

contact with the inner circumferential surfaces of the container portions, respectively, and

the holder includes a refrigerant passage for air-cooling or liquid-cooling the holder.

17. The battery module of claim 16, wherein

the phase change element changes its phase at a phase change temperature higher than a maximum operating temperature of the cells.

18. The battery module of claim 16 or 17, wherein

the phase change element changes its phase from a solid phase to a liquid phase by absorbing the heat of the cells.

19. The battery module of any one of claims 16-18, wherein

the phase change element changes its phase at a phase change temperature lower than a maximum allowable temperature of the cells.

20. (canceled)

21. (canceled)

22. (amended) The battery module of claim 16, wherein

the holder is configured to allow insertion of each of the cells from an axial end to the other axial end of the container portion.

23. (canceled)

24. (amended) The battery module of claim 16 or 22, wherein
the holder includes a holder body including the container portions, and
the pressing portions are separate from the holder body.

25. (amended) The battery module of claim 16 or 22, wherein
the holder includes a holder body including the container portions, and
the pressing portions are integral with the holder body.

26. (canceled)

27. (canceled)

28. (amended) The battery module of claim 16, wherein
each of the pressing portions is comprised of a wall which forms the refrigerant passage.

29. (amended) The battery module of any one of claims 16, 22, 24, 25, and 28, further

comprising:

multiple ones of the holder, wherein

the cells in each of the holders are connected in parallel, and

the cells held in one of the holders are connected in series to the cells held in the other one of the holders.

Amended Claim

補正された請求の範囲
[2011年3月28日(28.03.2011)国際事務局受理]

[請求項1] （補正後）複数の柱状又は板状の素電池と、該素電池を保持するホルダとを備えた電池モジュールであって、

前記ホルダは、前記素電池を収容する筒状の収容部と、前記素電池の温度を調節する温度調節部と、前記素電池を該収容部の内周面へ押圧する押圧部とを有し、金属又は高熱伝導性樹脂で形成されており、

前記素電池は、前記押圧部で押圧されることによって、その外周面が前記収容部の内周面に接触しており、

前記温度調節部は、前記ホルダに形成され、該ホルダを空冷又は液冷するための冷媒流路であり、

前記押圧部は、前記冷媒流路を区画する壁部で構成されている電池モジュール。

[請求項2] （削除）

[請求項3] （補正後）請求項１に記載の電池モジュールにおいて、

前記ホルダは、前記素電池が前記収容部の軸方向一端側から軸方向へ挿入されるように構成されている電池モジュール。

[請求項4] （削除）

[請求項5] （補正後）請求項１又は３に記載の電池モジュールにおいて、

前記ホルダは、前記収容部が形成されたホルダ本体を有し、

前記押圧部は、前記ホルダ本体と別体に構成されている電池モジュール。

[請求項6] （補正後）請求項１又は３に記載の電池モジュールにおいて、

前記ホルダは、前記収容部が形成されたホルダ本体を有し、

前記押圧部は、前記ホルダ本体と一体に構成されている電池モジュール。

[請求項7] （削除）

[請求項8] （削除）

[請求項9] （削除）

[請求項10] （補正後）請求項１、３、５及び６の何れか１つに記載の電池モジュールにおいて、

前記温度調節部は、前記素電池の温度を吸熱して相変化する相変化部材である電池モジュール。

[請求項11] （削除）

[請求項12] （削除）

[請求項13] （削除）

[請求項14] （削除）

[請求項15] （補正後）請求項１、３、５、６乃至１０の何れか１つに記載の電池モジュールにおいて、

前記ホルダを複数備えており、

前記各ホルダにおいて、前記複数の素電池は、並列に接続されており、

一の前記ホルダに保持された前記複数の素電池は、他の前記ホルダに保持された前記複数の素電池と直列に接続されている電池モジュール。

[請求項16] （補正後）複数の素電池を備えた電池モジュールであって、

前記複数の素電池を保持するホルダと、

前記ホルダに配設されて、前記素電池の温度を吸熱して相変化する相変化部材をさらに備え、

前記相変化部材は、前記素電池とは接触しておらず、前記ホルダを介して該素電池と熱的に接続されており、

前記素電池は、柱状又は板状に形成されており、

前記ホルダは、前記素電池を収容する筒状の収容部と、前記素電池を該収容部の内周面へ押圧する押圧部とを有し、金属又は高熱伝導性樹脂で形成されており、

前記素電池は、前記押圧部で押圧されることによって、その外周面が前記収容部の内周面に接触しており、

前記ホルダには、該ホルダを空冷又は液冷するための冷媒流路が形成されている電池モジュール。

[請求項17] 請求項１６に記載の電池モジュールにおいて、

前記相変化部材は、相変化温度が前記素電池の動作上限温度よりも高い電池モジュール。

[請求項18] 請求項１６又は１７に記載の電池モジュールにおいて、

前記相変化部材は、前記素電池の温度を吸熱して固相から液相に相変化する電池モジュール。

[請求項19] 請求項１６乃至１８の何れか１つに記載の電池モジュールにおいて、

前記相変化部材は、その相変化温度が前記素電池の許容上限温度よりも低い電池モジュール。

[請求項20] （削除）

[請求項21] （削除）

[請求項22] （補正後）請求項１６に記載の電池モジュールにおいて、

前記ホルダは、前記素電池が前記収容部の軸方向一端側から軸方向へ挿入されるように構成されている電池モジュール。

[請求項23] （削除）

[請求項24] （補正後）請求項１６又は２２に記載の電池モジュールにおいて、

前記ホルダは、前記収容部が形成されたホルダ本体を有し、

前記押圧部は、前記ホルダ本体と別体に構成されている電池モジュール。

[請求項25] （補正後）請求項１６又は２２に記載の電池モジュールにおいて、

前記ホルダは、前記収容部が形成されたホルダ本体を有し、

前記押圧部は、前記ホルダ本体と一体に構成されている電池モジュール。

[請求項26] （削除）

[請求項27] （削除）

[請求項28] （補正後）請求項１６に記載の電池モジュールにおいて、

前記押圧部は、前記冷媒流路を区画する壁部で構成されている電池モジュール。

[請求項29] （補正後）請求項１６、２２、２４、２５、及び２８の何れか１つに記載の電池モジュールにおいて、

前記ホルダを複数備えており、

前記各ホルダにおいて、前記複数の素電池は、並列に接続されており、

一の前記ホルダに保持された前記複数の素電池は、他の前記ホルダに保持された前記複数の素電池と直列に接続されている電池モジュール。

CLAIMS

1. A battery module comprising:

a plurality of substantially columnar or plate-shaped cells; and

a holder for holding the cells, wherein

the holder is made of metal or highly thermally conductive resin, and includes cylindrical container portions for containing the cells, respectively, a temperature adjusting portion for adjusting temperature of the cells, and pressing portions for pressing the cells toward inner circumferential surfaces of the container portions, respectively, and

outer circumferential surfaces of the cells pressed by the pressing portions are in contact with the inner circumferential surfaces of the container portions, respectively.

2. The battery module of claim 1, wherein

the plurality of cells are connected in parallel.

3. The battery module of claim 1 or 2, wherein

the holder is configured to allow insertion of each of the cells from an axial end to the other axial end of the container portion.

4. The battery module of any one of claims 1-3, wherein

each of the pressing portions elastically presses the cell.

5. The battery module of any one of claims 1-4, wherein

the holder includes a holder body including the container portions, and

the pressing portions are separate from the holder body.

6. The battery module of any one of claims 1-4, wherein

the holder includes a holder body including the container portions, and

the pressing portions are integral with the holder body.

7. The battery module of any one of claims 1-6, wherein

the temperature adjusting portion is a refrigerant passage which is formed in the holder to air-cool the holder.

8. The battery module of any one of claims 1-6, wherein

the temperature adjusting portion is a refrigerant passage which is formed in the holder to liquid-cool the holder.

9. The battery module of claim 7 or 8, wherein

each of the pressing portions is comprised of a wall which forms the refrigerant passage.

10. The battery module of any one of claims 1-6, wherein

the temperature adjusting portion is a phase change element which changes its phase by absorbing heat of the cells.

11. The battery module of claim 10, wherein

the phase change element is not in contact with the cells, and is thermally connected to the cells through the holder.

12. The battery module of claim 10 or 11, wherein

the phase change element changes its phase at a phase change temperature higher than a maximum operating temperature of the cells.

13. The battery module of any one of claims 10-12, wherein

the phase change element changes its phase from a solid phase to a liquid phase by absorbing heat of the cells.

14. The battery module of any one of claims 1-13, wherein

the phase change element changes its phase at a phase change temperature lower than a maximum allowable temperature of the cells.

15. The battery module of any one of claims 1, and 3-14, further comprising:

multiple ones of the holder, wherein

the cells in each of the holders are connected in parallel, and

the cells held in one of the holders are connected in series to the cells held in the other one of the holders.

16. A battery module including a plurality of cells, the battery module comprising:

a holder for holding the plurality of cells; and

a phase change element which is arranged in the holder, and changes its phase by absorbing heat of the cells, wherein

the phase change element is not in contact with the cells, and is thermally connected to the cells through the holder.

17. The battery module of claim 16, wherein

the phase change element changes its phase at a phase change temperature higher than a maximum operating temperature of the cells.

18. The battery module of claim 16 or 17, wherein

the phase change element changes its phase from a solid phase to a liquid phase by absorbing the heat of the cells.

19. The battery module of any one of claims 16-18, wherein

the phase change element changes its phase at a phase change temperature lower than a maximum allowable temperature of the cells.

20. The battery module of any one of claims 16-19, wherein

the cells are columnar or plate-shaped,

the holder is made of metal or highly thermally conductive resin, and includes cylindrical container portions for containing the cells, respectively, and pressing portions for pressing the cells toward inner circumferential surfaces of the container portions, and

outer circumferential surfaces of the cells pressed by the pressing portions are in contact with the inner circumferential surfaces of the container portions, respectively.

21. The battery module of claim 20, wherein

the cells are connected in parallel.

22. The battery module of claim 20 or 21, wherein

the holder is configured to allow insertion of each of the cells from an axial end to the other axial end of the container portion.

23. The battery module of any one of claims 20-22, wherein each of the pressing portions elastically presses the cell.

24. The battery module of any one of claims 20-23, wherein the holder includes a holder body including the container portions, and the pressing portions are separate from the holder body.

25. The battery module of any one of claims 20-23, wherein the holder includes a holder body including the container portions, and the pressing portions are integral with the holder body.

26. The battery module of any one of claims 20-25, wherein the holder includes a refrigerant passage for air-cooling the holder.

27. The battery module of any one of claims 20-25, wherein the holder includes a refrigerant passage for liquid-cooling the holder.

28. The battery module of claim 26 or 27, wherein each of the pressing portions is comprised of a wall which forms the refrigerant passage.

29. The battery module of any one of claims 20, and 22-28, further

comprising:

multiple ones of the holder, wherein

the cells in each of the holders are connected in parallel, and

the cells held in one of the holders are connected in series to the cells held in the other one of the holders.

UNITED STATES PATENT AND TRADEMARK OFFICE

UNITED STATES DEPARTMENT OF COMMERCE
United States Patent and Trademark Office
Address: COMMISSIONER FOR PATENTS
P.O. Box 1450
Alexandria, Virginia 22313-1450
www.uspto.gov

APPLICATION NO.	FILING DATE	FIRST NAMED INVENTOR	ATTORNEY DOCKET NO.	CONFIRMATION NO.
13/147,998	08/04/2011	Katsumi Kozu	085393-0647	7767

53080 7590 10/25/2011
MCDERMOTT WILL & EMERY LLP
600 13TH STREET, NW
WASHINGTON, DC 20005-3096

EXAMINER
YANCHUK, STEPHEN J

ART UNIT	PAPER NUMBER
1729	

NOTIFICATION DATE	DELIVERY MODE
10/25/2011	ELECTRONIC

Please find below and/or attached an Office communication concerning this application or proceeding.

The time period for reply, if any, is set in the attached communication.

Notice of the Office communication was sent electronically on above-indicated "Notification Date" to the following e-mail address(es):

mweipdocket@mwe.com

UNITED STATES PATENT AND TRADEMARK OFFICE

Commissioner for Patents
United States Patent and Trademark Office
P.O. Box 1450
Alexandria, VA 22313-1450
www.uspto.gov

WG

October 24, 2011

In re application of	:	DECISION ON REQUEST TO
Katsumi Kozu	:	PARTICIPATE IN PATENT
Serial No. 13/147,998	:	PROSECUTION HIGHWAY
Filed: August 4, 2011	:	PROGRAM AND
For: BATTERY MODULE	:	PETITION TO MAKE SPECIAL
	:	UNDER 37 CFR 1.102(a)

This is a decision on the request to participate in the PCT Patent Prosecution Highway (PCT-PPH) pilot program and the petition under 37 CFR 1.102(a), filed August 12, 2011, to make the above-identified application special.

The request and petition are **GRANTED**.

A grantable request to participate in the PCT-PPH pilot program and petition to make special require:

(1) The U.S. application must disclose an eligible relationship to one or more PCT applications where the ISA or IPEA are the JPO, EPO, KIPO or USPTO;

(2) At least one claim in the PCT application has novelty, inventive step, and industrial applicability and must be free of any observations in Box VIII in the latest work product in the international stage or applicant must identify and explain why the claim(s) is/are not subject to the observation in Box VIII;

(3) Applicant must submit a copy of the claim(s) from the PCT application(s) that have novelty, inventive step, and industrial applicability along with an English translation thereof and a statement that the English translation is accurate, if the claims are not in the English language;

(4) All the claims in the U.S. application must sufficiently correspond or be amended to sufficiently correspond to the claim(s) that have novelty, inventive step, and industrial applicability in the PCT application(s);

(5) Examination of the U.S. application has not begun;

(6) Applicant must submit a copy of the latest international work product from the PCT application indicating that the claim(s) have novelty, inventive step, and industrial

applicability along with an English translation thereof if the latest international work product is not in the English language; and

(7) Applicant must submit an IDS listing the documents cited by the PCT examiner in the international work product along with copies of documents except U.S. patents or U.S. patent application publications.

The request to participate in the PPH program and petition comply with the above requirements. Accordingly, the above-identified application has been accorded "special" status.

The application is being forwarded to the examiner for action on the merits commensurate with this decision.

Any inquiry regarding this decision should be directed to Walter D. Griffin, Supervisory Patent Examiner, at (571) 272-1447.

All other inquiries concerning the examination or status of the application is accessible in the PAIR system at http://www.uspto.gov/ebc/index.html.

/Walter D. Griffin/

Walter D. Griffin
Supervisory Patent Examiner
Technology Center 1700

PTO/SB/20PCT-KR (06-10)
Approved for use through 01/31/2012. OMB 0651-0058
U.S. Patent and Trademark Office; U. S. DEPARTMENT OF COMMERCE
Under the Paperwork Reduction Act of 1995, no persons are required to respond to a collection of information unless it displays a valid OMB control number.

REQUEST FOR PARTICIPATION IN THE PATENT COOPERATION TREATY - PATENT PROSECUTION HIGHWAY (PCT-PPH) PILOT PROGRAM BETWEEN THE KOREAN INTELLECTUAL PROPERTY OFFICE (KIPO) AND THE USPTO

Application No:	To be assigned	Filing date:	August 4, 2011
First Named Inventor:	THURMAN, Joshua M.		
Title of the Invention:	Non-Invasive Detection of Complement-Mediated Inflammation Using CR2-Targeted Nanoparticles		

THIS REQUEST FOR PARTICIPATION IN THE PCT-PPH PILOT PROGRAM ALONG WITH THE REQUIRED DOCUMENTS MUST BE SUBMITTED VIA EFS-WEB. INFORMATION REGARDING EFS-WEB IS AVAILABLE AT HTTP://WWW.USPTO.GOV/EBC/EFS_HELP.HTML

APPLICANT HEREBY REQUESTS PARTICIPATION IN THE PCT-PPH PROGRAM AND PETITIONS TO MAKE THE ABOVE-IDENTIFIED APPLICATION SPECIAL UNDER THE PCT-PPH PROGRAM.

The above-identified application is (1) a national stage entry of the corresponding PCT application, or (2) a national stage entry of another PCT application which claims priority to the corresponding PCT application, or (3) a national application that claims domestic/ foreign priority to the corresponding PCT application, or (4) a national application which forms the basis for the priority claim in the corresponding PCT application, or (5) a continuing application of a U.S. application that satisfies one of (1) to (4) above, or (6) a U.S. application that claims domestic benefit to a U.S. provisional application which forms the basis for the priority claim in the corresponding PCT application.

The corresponding PCT application number(s) is/are: PCT/US2010/023201

The international filing date of the corresponding PCT application(s) is/are: 04 February 2010

I. List of Required Documents:

a. **A copy of the latest international work product (WO/ISA, WO/IPEA, or IPER) in the above–identified corresponding PCT application(s)**

- [x] Is attached.
- [ ] Is not attached because the document is already in the U.S. application.

b. **A copy of all claims which were indicated as having novelty, inventive step and industrial applicability in the above-identified corresponding PCT application(s).**

- [ ] Is attached.
- [x] Is not attached because the document is already in the U.S. application.

c. **English translations of the documents in a. and b. above are attached (if the documents are not in the English language). A statement that the English translation is accurate is attached for the document in b. above.**

This collection of information is required by 35 U.S.C. 119, 37 CFR 1.55, and 37 CFR 1.102(d). The information is required to obtain or retain a benefit by the public, which is to file (and by the USPTO to process) an application. Confidentiality is governed by 35 U.S.C. 122 and 37 CFR 1.11 and 1.14. This collection is estimated to take 2 hours to complete, including gathering, preparing, and submitting the completed application form to the USPTO. Time will vary depending upon the individual case. Any comments on the amount of time you require to complete this form and/or suggestions for reducing this burden should be sent to the Chief Information Officer, U.S. Patent and Trademark Office, U.S. Department of Commerce, P.O. Box 1450, Alexandria, VA 22313-1450. DO NOT SEND FEES OR COMPLETED FORMS TO THIS ADDRESS.

Approved for use through 01/31/2012. OMB 0651-0058
U.S.Patent and Trademark Office; U.S. DEPARTMENT OF COMMERCE
Under the Paperwork Reduction Act of 1995, no persons are required to respond to a collection of information unless it displays a valid OMB control number.

REQUEST FOR PARTICIPATION IN THE PCT-PPH PILOT PROGRAM BETWEEN THE KIPO AND THE USPTO

(continued)

Application No.:	To be assigned
First Named Inventor:	THURMAN, Joshua M.

d. **(1) An information disclosure statement listing the documents cited in the international work products (ISR, WO/ISA, WO/IPEA, IPER) of the corresponding PCT application.**

- [✔] Is attached
- [ ] Has already been filed in the above-identified U.S. application on _____

(2) Copies of all documents (except) for U.S. patents or U.S. patent application publications)

- [✔] Are attached.
- [ ] Have already been filed in the above-identified U.S. application on _____

II. Claims Correspondence Table:

Claims in US Application	Patentable Claims in the corresponding PCT Application	Explanation regarding the correspondence
1-5	33-37	Claims are identical in PCT and instant US application

III. All the claims in the US application sufficiently correspond to the patentable claims in the corresponding PCT application.

Signature /Steven C. Koerber/	Date August 4, 2011
Name (Print/Typed) Steven C. Koerber, Ph.D.	Registration Number 54,233

Privacy Act Statement

The **Privacy Act of 1974 (P.L. 93-579)** requires that you be given certain information in connection with your submission of the attached form related to a patent application or patent. Accordingly, pursuant to the requirements of the Act, please be advised that: (1) the general authority for the collection of this information is 35 U.S.C. 2(b)(2); (2) furnishing of the information solicited is voluntary; and (3) the principal purpose for which the information is used by the U.S. Patent and Trademark Office is to process and/or examine your submission related to a patent application or patent. If you do not furnish the requested information, the U.S. Patent and Trademark Office may not be able to process and/or examine your submission, which may result in termination of proceedings or abandonment of the application or expiration of the patent.

The information provided by you in this form will be subject to the following routine uses:

1. The information on this form will be treated confidentially to the extent allowed under the Freedom of Information Act (5 U.S.C. 552) and the Privacy Act (5 U.S.C 552a). Records from this system of records may be disclosed to the Department of Justice to determine whether disclosure of these records is required by the Freedom of Information Act.
2. A record from this system of records may be disclosed, as a routine use, in the course of presenting evidence to a court, magistrate, or administrative tribunal, including disclosures to opposing counsel in the course of settlement negotiations.
3. A record in this system of records may be disclosed, as a routine use, to a Member of Congress submitting a request involving an individual, to whom the record pertains, when the individual has requested assistance from the Member with respect to the subject matter of the record.
4. A record in this system of records may be disclosed, as a routine use, to a contractor of the Agency having need for the information in order to perform a contract. Recipients of information shall be required to comply with the requirements of the Privacy Act of 1974, as amended, pursuant to 5 U.S.C. 552a(m).
5. A record related to an International Application filed under the Patent Cooperation Treaty in this system of records may be disclosed, as a routine use, to the International Bureau of the World Intellectual Property Organization, pursuant to the Patent Cooperation Treaty.
6. A record in this system of records may be disclosed, as a routine use, to another federal agency for purposes of National Security review (35 U.S.C. 181) and for review pursuant to the Atomic Energy Act (42 U.S.C. 218(c)).
7. A record from this system of records may be disclosed, as a routine use, to the Administrator, General Services, or his/her designee, during an inspection of records conducted by GSA as part of that agency's responsibility to recommend improvements in records management practices and programs, under authority of 44 U.S.C. 2904 and 2906. Such disclosure shall be made in accordance with the GSA regulations governing inspection of records for this purpose, and any other relevant (*i.e.*, GSA or Commerce) directive. Such disclosure shall not be used to make determinations about individuals.
8. A record from this system of records may be disclosed, as a routine use, to the public after either publication of the application pursuant to 35 U.S.C. 122(b) or issuance of a patent pursuant to 35 U.S.C. 151. Further, a record may be disclosed, subject to the limitations of 37 CFR 1.14, as a routine use, to the public if the record was filed in an application which became abandoned or in which the proceedings were terminated and which application is referenced by either a published application, an application open to public inspection or an issued patent.
9. A record from this system of records may be disclosed, as a routine use, to a Federal, State, or local law enforcement agency, if the USPTO becomes aware of a violation or potential violation of law or regulation.

PTO/SB/20PCT-KR (06-10)
Approved for use through 01/31/2012. OMB 0651-0058
U.S. Patent and Trademark Office; U. S. DEPARTMENT OF COMMERCE
Under the Paperwork Reduction Act of 1995, no persons are required to respond to a collection of information unless it displays a valid OMB control number.

REQUEST FOR PARTICIPATION IN THE PATENT COOPERATION TREATY - PATENT PROSECUTION HIGHWAY (PCT-PPH) PILOT PROGRAM BETWEEN THE KOREAN INTELLECTUAL PROPERTY OFFICE (KIPO) AND THE USPTO

Application No:	13/148,028	Filing date:	August 4, 2011
First Named Inventor:	THURMAN, Joshua M.		
Title of the Invention:	Non-Invasive Detection of Complement-Mediated Inflammation Using CR2-Targeted Nanoparticles		

THIS REQUEST FOR PARTICIPATION IN THE PCT-PPH PILOT PROGRAM ALONG WITH THE REQUIRED DOCUMENTS MUST BE SUBMITTED VIA EFS-WEB. INFORMATION REGARDING EFS-WEB IS AVAILABLE AT HTTP://WWW.USPTO.GOV/EBC/EFS_HELP.HTML

APPLICANT HEREBY REQUESTS PARTICIPATION IN THE PCT-PPH PROGRAM AND PETITIONS TO MAKE THE ABOVE-IDENTIFIED APPLICATION SPECIAL UNDER THE PCT-PPH PROGRAM.

The above-identified application is (1) a national stage entry of the corresponding PCT application, or (2) a national stage entry of another PCT application which claims priority to the corresponding PCT application, or (3) a national application that claims domestic/ foreign priority to the corresponding PCT application, or (4) a national application which forms the basis for the priority claim in the corresponding PCT application, or (5) a continuing application of a U.S. application that satisfies one of (1) to (4) above, or (6) a U.S. application that claims domestic benefit to a U.S. provisional application which forms the basis for the priority claim in the corresponding PCT application.

The corresponding PCT application number(s) is/are: PCT/US2010/023201

The international filing date of the corresponding PCT application(s) is/are: 04 February 2010

I. List of Required Documents:

a. **A copy of the latest international work product (WO/ISA, WO/IPEA, or IPER) in the above–identified corresponding PCT application(s)**

☐ Is attached.

☑ Is not attached because the document is already in the U.S. application.

b. **A copy of all claims which were indicated as having novelty, inventive step and industrial applicability in the above-identified corresponding PCT application(s).**

☑ Is attached.

☐ Is not attached because the document is already in the U.S. application.

c. **English translations of the documents in a. and b. above are attached (if the documents are not in the English language). A statement that the English translation is accurate is attached for the document in b. above.**

This collection of information is required by 35 U.S.C. 119, 37 CFR 1.55, and 37 CFR 1.102(d). The information is required to obtain or retain a benefit by the public, which is to file (and by the USPTO to process) an application. Confidentiality is governed by 35 U.S.C. 122 and 37 CFR 1.11 and 1.14. This collection is estimated to take 2 hours to complete, including gathering, preparing, and submitting the completed application form to the USPTO. Time will vary depending upon the individual case. Any comments on the amount of time you require to complete this form and/or suggestions for reducing this burden should be sent to the Chief Information Officer, U.S. Patent and Trademark Office, U.S. Department of Commerce, P.O. Box 1450, Alexandria, VA 22313-1450. DO NOT SEND FEES OR COMPLETED FORMS TO THIS ADDRESS.

Approved for use through 01/31/2012. OMB 0651-0058
U.S.Patent and Trademark Office; U.S. DEPARTMENT OF COMMERCE
Under the Paperwork Reduction Act of 1995, no persons are required to respond to a collection of information unless it displays a valid OMB control number.

REQUEST FOR PARTICIPATION IN THE PCT-PPH PILOT PROGRAM BETWEEN THE KIPO AND THE USPTO

(continued)

Application No.:	To be assigned
First Named Inventor:	THURMAN, Joshua M.

d. **(1) An information disclosure statement listing the documents cited in the international work products (ISR, WO/ISA, WO/IPEA, IPER) of the corresponding PCT application.**

☐ Is attached

☑ Has already been filed in the above-identified U.S. application on August 4, 2011

(2) Copies of all documents (except) for U.S. patents or U.S. patent application publications)

☐ Are attached.

☑ Have already been filed in the above-identified U.S. application on August 4, 2011

II. Claims Correspondence Table:

Claims in US Application	Patentable Claims in the corresponding PCT Application	Explanation regarding the correspondence
33-37	33-37	Claims are identical in PCT and instant US application

III. All the claims in the US application sufficiently correspond to the patentable claims in the corresponding PCT application.

Signature /Steven C. Koerber/	Date January 19, 2012
Name (Print/Typed) Steven C. Koerber, Ph.D.	Registration Number 54,233

Privacy Act Statement

The **Privacy Act of 1974 (P.L. 93-579)** requires that you be given certain information in connection with your submission of the attached form related to a patent application or patent. Accordingly, pursuant to the requirements of the Act, please be advised that: (1) the general authority for the collection of this information is 35 U.S.C. 2(b)(2); (2) furnishing of the information solicited is voluntary; and (3) the principal purpose for which the information is used by the U.S. Patent and Trademark Office is to process and/or examine your submission related to a patent application or patent. If you do not furnish the requested information, the U.S. Patent and Trademark Office may not be able to process and/or examine your submission, which may result in termination of proceedings or abandonment of the application or expiration of the patent.

The information provided by you in this form will be subject to the following routine uses:

1. The information on this form will be treated confidentially to the extent allowed under the Freedom of Information Act (5 U.S.C. 552) and the Privacy Act (5 U.S.C 552a). Records from this system of records may be disclosed to the Department of Justice to determine whether disclosure of these records is required by the Freedom of Information Act.
2. A record from this system of records may be disclosed, as a routine use, in the course of presenting evidence to a court, magistrate, or administrative tribunal, including disclosures to opposing counsel in the course of settlement negotiations.
3. A record in this system of records may be disclosed, as a routine use, to a Member of Congress submitting a request involving an individual, to whom the record pertains, when the individual has requested assistance from the Member with respect to the subject matter of the record.
4. A record in this system of records may be disclosed, as a routine use, to a contractor of the Agency having need for the information in order to perform a contract. Recipients of information shall be required to comply with the requirements of the Privacy Act of 1974, as amended, pursuant to 5 U.S.C. 552a(m).
5. A record related to an International Application filed under the Patent Cooperation Treaty in this system of records may be disclosed, as a routine use, to the International Bureau of the World Intellectual Property Organization, pursuant to the Patent Cooperation Treaty.
6. A record in this system of records may be disclosed, as a routine use, to another federal agency for purposes of National Security review (35 U.S.C. 181) and for review pursuant to the Atomic Energy Act (42 U.S.C. 218(c)).
7. A record from this system of records may be disclosed, as a routine use, to the Administrator, General Services, or his/her designee, during an inspection of records conducted by GSA as part of that agency's responsibility to recommend improvements in records management practices and programs, under authority of 44 U.S.C. 2904 and 2906. Such disclosure shall be made in accordance with the GSA regulations governing inspection of records for this purpose, and any other relevant (*i.e.*, GSA or Commerce) directive. Such disclosure shall not be used to make determinations about individuals.
8. A record from this system of records may be disclosed, as a routine use, to the public after either publication of the application pursuant to 35 U.S.C. 122(b) or issuance of a patent pursuant to 35 U.S.C. 151. Further, a record may be disclosed, subject to the limitations of 37 CFR 1.14, as a routine use, to the public if the record was filed in an application which became abandoned or in which the proceedings were terminated and which application is referenced by either a published application, an application open to public inspection or an issued patent.
9. A record from this system of records may be disclosed, as a routine use, to a Federal, State, or local law enforcement agency, if the USPTO becomes aware of a violation or potential violation of law or regulation.

UNITED STATES PATENT AND TRADEMARK OFFICE

Commissioner for Patents
United States Patent and Trademark Office
P.O. Box 1450
Alexandria, VA 22313-1450
www.uspto.gov

KILPATRICK TOWNSEND & STOCKTON LLP
TWO EMBARCADERO CENTER
EIGHTH FLOOR
SAN FRANCISCO CA 94111-3834

MAILED
MAR 26 2012
OFFICE OF PETITIONS

In re Application of
Thurman et al.
Application No.: 13/148,028
Filed: August 4, 2011
Attorney Docket No.: 85256-005810US-811688
For: NON-INVASIVE DETECTION OF COMPLEMENT-MEDIATED INFLAMMATION USING CR2-TARGETED NANOPARTICLES

: DECISION ON REQUEST TO
: PARTICIPATE IN THE PATENT
: PROSECUTION HIGHWAY
: PROGRAM AND PETITION
: TO MAKE SPECIAL UNDER
: 37 CFR 1.102(a)

This is a decision on the request to participate in the PCT Patent Prosecution Highway (PCT-PPH) pilot program and the petition under 37 CFR 1.102(a), filed on January 19, 2012, to make the above-identified application special.

The request and petition are **GRANTED**.

Discussion

A grantable request to participate in the PCT-PPH pilot program and petition to make special require:

(1) The U.S. application must have an eligible relationship to one or more PCT applications where the ISA or IPEA are the JPO, EPO, KIPO, NPI, NBPR, or USPTO;

(2) At least one claim in the PCT application has novelty, inventive step, and industrial applicability and must be free of any observations in Box VIII in the latest work product in the international stage or applicant must identify and explain why the claim(s) is/are not subject to the observation in Box VIII;

(3) Applicant must submit a copy of the claim(s) from the PCT application(s) that have novelty, inventive step, and industrial applicability along with an English translation thereof and a statement that the English translation is accurate, if the claims are not in the

English language;

(4) All the claims in the U.S. application must sufficiently correspond or be amended to sufficiently correspond to the claim(s) that have novelty, inventive step, and industrial applicability in the PCT application(s);

(5) Examination of the U.S. application has not begun;

(6) Applicant must submit a copy of the latest international work product from the PCT application indicating that the claim(s) have novelty, inventive step, and industrial applicability along with an English translation thereof if the latest international work product is not in the English language;

(7) Applicant must submit an IDS listing the documents cited by the PCT examiner in the international work product along with copies of documents except U.S. patents or U.S. patent application publications.

(8) Applicant is required to submit a claims correspondence table in English which indicates how all the claims in the U.S. application correspond to the claims indicated as having novelty, inventive step and industrial applicability in the latest international work product.

The request to participate in the PCT-PPH pilot program and petition comply with the above requirements. Accordingly, the above-identified application has been accorded "special" status.

Inquiries concerning this decision should be directed to Petitions Examiner Liana Walsh at (571) 272-3206.

All other inquiries concerning the examination or status of the application is accessible in the PAIR system at http://www.uspto.gov/ebc.index.html.

This application will be forwarded to the examiner for action on the merits commensurate with this decision once this application's formality reviews have been completed.

/dab/
David Bucci
Petitions Examiner
Office of Petitions

PTO/SB/20PCT-EP (05-10)
Approved for use through 01/31/2012. OMB 0651-0058
U.S. Patent and Trademark Office; U. S. DEPARTMENT OF COMMERCE
Under the Paperwork Reduction Act of 1995, no persons are required to respond to a collection of information unless it displays a valid OMB control number.

REQUEST FOR PARTICIPATION IN THE PATENT COOPERATION TREATY - PATENT PROSECUTION HIGHWAY (PCT-PPH) PILOT PROGRAM BETWEEN THE EUROPEAN PATENT OFFICE (EPO) AND THE USPTO

Application No:	Unassigned	Filing date:	2011-08-05
First Named Inventor:	Riccardo Alluigi		
Title of the Invention:	Trigger Sprayer		

THIS REQUEST FOR PARTICIPATION IN THE PCT-PPH PILOT PROGRAM ALONG WITH THE REQUIRED DOCUMENTS MUST BE SUBMITTED VIA EFS-WEB. INFORMATION REGARDING EFS-WEB IS AVAILABLE AT HTTP://WWW.USPTO.GOV/EBC/EFS_HELP.HTML

APPLICANT HEREBY REQUESTS PARTICIPATION IN THE PCT-PPH PROGRAM AND PETITIONS TO MAKE THE ABOVE-IDENTIFIED APPLICATION SPECIAL UNDER THE PCT-PPH PROGRAM.

The above-identified application is (1) a national stage entry of the corresponding PCT application, or (2) a national stage entry of another PCT application which claims priority to the corresponding PCT application, or (3) a national application that claims domestic/ foreign priority to the corresponding PCT application, or (4) a national application which forms the basis for the priority claim in the corresponding PCT application, or (5) a continuing application of a U.S. application that satisfies one of (1) to (4) above, or (6) a U.S. application that claims domestic benefit to a U.S. provisional application which forms the basis for the priority claim in the corresponding PCT application.

The corresponding PCT application number(s) is/are: PCT/IB2010/052369

The international filing date of the corresponding PCT application(s) is/are: May 27, 2010

I. List of Required Documents:

a. **A copy of the latest international work product (WO/ISA, WO/IPEA, or IPER) in the above–identified corresponding PCT application(s)**

- [x] Is attached
- [ ] Is not attached because the document is already in the U.S. application.

b. **A copy of all claims which were indicated as having novelty, inventive step and industrial applicability in the above-identified corresponding PCT application(s).**

- [x] Is attached.
- [ ] Is not attached because the document is already in the U.S. application.

c. **English translations of the documents in a. and b. above are attached (if the documents are not in the English language). A statement that the English translation is accurate is attached for the document in b. above.**

This collection of information is required by 35 U.S.C. 119, 37 CFR 1.55, and 37 CFR 1.102(d). The information is required to obtain or retain a benefit by the public, which is to file (and by the USPTO to process) an application. Confidentiality is governed by 35 U.S.C. 122 and 37 CFR 1.11 and 1.14. This collection is estimated to take 2 hours to complete, including gathering, preparing, and submitting the completed application form to the USPTO. Time will vary depending upon the individual case. Any comments on the amount of time you require to complete this form and/or suggestions for reducing this burden should be sent to the Chief Information Officer, U.S. Patent and Trademark Office, U.S. Department of Commerce, P.O. Box 1450, Alexandria, VA 22313-1450. DO NOT SEND FEES OR COMPLETED FORMS TO THIS ADDRESS.

Approved for use through 01/31/2012. OMB 0651-0058
U.S.Patent and Trademark Office; U.S. DEPARTMENT OF COMMERCE
Under the Paperwork Reduction Act of 1995, no persons are required to respond to a collection of information unless it displays a valid OMB control number.

REQUEST FOR PARTICIPATION IN THE PCT-PPH PILOT PROGRAM BETWEEN THE EPO AND THE USPTO

(continued)

Application No.:	Unassigned
First Named Inventor:	Riccardo Alluigi

d. **(1) An information disclosure statement listing the documents cited in the international work products (ISR, WO/ISA, WO/IPEA, IPER) of the corresponding PCT application.**

- [x] Is attached
- [ ] Has already been filed in the above-identified U.S. application on _____

(2) Copies of all documents (except) for U.S. patents or U.S. patent application publications)

- [x] Are attached.
- [ ] Have already been filed in the above-identified U.S. application on _____

II. Claims Correspondence Table:

Claims in US Application	Patentable Claims in the corresponding PCT Application	Explanation regarding the correspondence
1-17	1-17	Claims 1-17 (as set forth in the Preliminary Amendment) correspond to PCT claims 1-17, respectively.

III. All the claims in the US application sufficiently correspond to the patentable claims in the corresponding PCT application.

Signature /luke a kilyk/	Date 2011-08-05
Name (Print/Typed) Luke A. Kilyk	Registration Number 33251

Privacy Act Statement

The **Privacy Act of 1974 (P.L. 93-579)** requires that you be given certain information in connection with your submission of the attached form related to a patent application or patent. Accordingly, pursuant to the requirements of the Act, please be advised that: (1) the general authority for the collection of this information is 35 U.S.C. 2(b)(2); (2) furnishing of the information solicited is voluntary; and (3) the principal purpose for which the information is used by the U.S. Patent and Trademark Office is to process and/or examine your submission related to a patent application or patent. If you do not furnish the requested information, the U.S. Patent and Trademark Office may not be able to process and/or examine your submission, which may result in termination of proceedings or abandonment of the application or expiration of the patent.

The information provided by you in this form will be subject to the following routine uses:

1. The information on this form will be treated confidentially to the extent allowed under the Freedom of Information Act (5 U.S.C. 552) and the Privacy Act (5 U.S.C 552a). Records from this system of records may be disclosed to the Department of Justice to determine whether disclosure of these records is required by the Freedom of Information Act.
2. A record from this system of records may be disclosed, as a routine use, in the course of presenting evidence to a court, magistrate, or administrative tribunal, including disclosures to opposing counsel in the course of settlement negotiations.
3. A record in this system of records may be disclosed, as a routine use, to a Member of Congress submitting a request involving an individual, to whom the record pertains, when the individual has requested assistance from the Member with respect to the subject matter of the record.
4. A record in this system of records may be disclosed, as a routine use, to a contractor of the Agency having need for the information in order to perform a contract. Recipients of information shall be required to comply with the requirements of the Privacy Act of 1974, as amended, pursuant to 5 U.S.C. 552a(m).
5. A record related to an International Application filed under the Patent Cooperation Treaty in this system of records may be disclosed, as a routine use, to the International Bureau of the World Intellectual Property Organization, pursuant to the Patent Cooperation Treaty.
6. A record in this system of records may be disclosed, as a routine use, to another federal agency for purposes of National Security review (35 U.S.C. 181) and for review pursuant to the Atomic Energy Act (42 U.S.C. 218(c)).
7. A record from this system of records may be disclosed, as a routine use, to the Administrator, General Services, or his/her designee, during an inspection of records conducted by GSA as part of that agency's responsibility to recommend improvements in records management practices and programs, under authority of 44 U.S.C. 2904 and 2906. Such disclosure shall be made in accordance with the GSA regulations governing inspection of records for this purpose, and any other relevant (*i.e.*, GSA or Commerce) directive. Such disclosure shall not be used to make determinations about individuals.
8. A record from this system of records may be disclosed, as a routine use, to the public after either publication of the application pursuant to 35 U.S.C. 122(b) or issuance of a patent pursuant to 35 U.S.C. 151. Further, a record may be disclosed, subject to the limitations of 37 CFR 1.14, as a routine use, to the public if the record was filed in an application which became abandoned or in which the proceedings were terminated and which application is referenced by either a published application, an application open to public inspection or an issued patent.
9. A record from this system of records may be disclosed, as a routine use, to a Federal, State, or local law enforcement agency, if the USPTO becomes aware of a violation or potential violation of law or regulation.

UNITED STATES PATENT AND TRADEMARK OFFICE

Commissioner for Patents
United States Patent and Trademark Office
P.O. Box 1450
Alexandria, VA 22313-1450
www.uspto.gov

THOMPSON HINE L.L.P.
INTELLECTUAL PROPERTY GROUP
10050 INNOVATION DRIVE
SUITE 400
DAYTON OH 45342-4934

MAILED
MAR 27 2012
OFFICE OF PETITIONS

Applicant: Suk Bong Hong
Appl. No.: 13/148,078
International Filing Date: September 21, 2009
Title: METHOD FOR SELECTIVELY ISOLATING HYDROGEN OR HELIUM USING A NATROLITE-BASED ZEOLITE, AND NOVEL NATROLITE-BASED ZEOLITE
Attorney Docket: 074283.11
Pub. No.: US 20110308385 A1
Pub. Date: December 22, 2011

This is a decision on the request for a corrected patent application publication under 37 CFR 1.221(b), received on January 4, 2012 and again on January 6, 2012, for the above-identified application.

The request is DISMISSED.

Applicant requests that the application be republished because the patent application publication contains an error in the claims.

37 CFR 1.221 (b) is applicable "only when the Office makes a material mistake which is apparent from Office records.... Any request for a corrected publication or revised patent application publication other than provided as provided in paragraph (a) of this section must be filed within two months from the date of the patent application publication. This period is not extendable." A material mistake must affect the public's ability to appreciate the technical disclosure of the patent application publication, to determine the scope of the patent application publication, or to determine the scope of the provisional rights that an applicant may seek to enforce upon issuance of a patent. [1]

The error noted by requestor in the claims is not an Office error under 37 CFR 1.221(b). The publication accurately reflected the specification/claims as filed. See MPEP 1130B. Moreover, the error is due to the quality of the text, which makes it difficult to electronically reproduce by digital imaging and optical character recognition. See 37 CFR 1.52(a)(1)(v), which states that all papers that are to become a permanent part of Office records must be presented "in a form

[1] Changes to Implement Eighteen-Month Publication of Patent Applications, 65 FR 57023, 57038 (Sept. 20, 2000), 1239, Off. Gaz. Pat. Office Notices 63, 75 (Oct. 10, 2000) (final rule).

having sufficient clarity and contrast between the paper and the writing to permit . . . electronic capture by use of digital imaging and optical character recognition." As set forth at MPEP 1121, "applications with poor quality text, which may be acceptable for scanning and examination purposes, may lead to errors in the patent application publication. Correction of these errors and inclusion of any desired amendments into the text of the originally-filed specification and drawings will only occur if applicant files a request for republication under 37 CFR 1.221(a). They will not be corrected by the Office in a corrected publication under 37 CFR 1.221(b)."

The applicant is advised that a "request for republication of an application previously published" may be filed under 37 CFR 1.221 (a). Such a request for republication "must include a copy of the application compliance with the Office's electronic filing system requirements and be accompanied by the publication fee set forth in § 1.18 (d) and the processing fee set forth in § 1.17 (i)." If the request for republication does not comply with the electronic filing system requirements, the republication will not take place and the publication fee set forth in § 1.18 (d) will be refunded. The processing fee will be retained.

A guide for filing a request for a Pre-Grant Publication, such as a request for republication, may be found on the link below:

http://www.uspto.gov/patents/process/file/efs/guidance/index.jsp

http://www.uspto.gov/ebc/portal/efs/pgpub_quickstart.pdf

Any request for republication under 37 CFR 1.221(a), must be submitted via the EFS system, as a "Pre-Grant Publication".

Inquiries relating to this matter may be directed to Karen Creasy at (571) 272-3208.

/Christopher Bottorff/

Christopher Bottorff
Petitions Examiner
Office of Petitions

Modified PTO/SB/20PCT-JP (01-2010)
Approved for use through 01/31/2012. OMB 0651-0058
U.S. Patent and Trademark Office; U.S. DEPARTMENT OF COMMERCE
Under the Paperwork Reduction Act of 1995, no persons are required to respond to a collection of information unless it displays a valid OMB control number.

REQUEST FOR PARTICIPATION IN THE PATENT COOPERATION TREATY - PATENT PROSECUTION HIGHWAY (PCT-PPH) PILOT PROGRAM BETWEEN THE JAPAN PATENT OFFICE (JPO) AND THE USPTO

Application No.:	13/148,129	Filing Date:	August 5, 2011
First Named Inventor:	Kyohei YOSHINO et al.	Attorney Docket No.:	2011_1106A
Title of the Invention:	PLASMA DISPLAY PANEL		

THIS REQUEST FOR PARTICIPATION IN THE PCT-PPH PILOT PROGRAM ALONG WITH THE REQUIRED DOCUMENTS MUST BE SUBMITTED VIA EFS-WEB. INFORMATION REGARDING EFS-WEB IS AVAILABLE AT HTTP://WWW.USPTO.GOV/EBC/EFS_HELP.HTML

APPLICANT HEREBY REQUESTS PARTICIPATION IN THE PCT-PPH PROGRAM AND PETITIONS TO MAKE THE ABOVE-IDENTIFIED APPLICATION SPECIAL UNDER THE PCT-PPH PROGRAM.

The above-identified application is (1) a national stage entry of the corresponding PCT application, or (2) a national stage entry of another PCT application which claims priority to the corresponding PCT application, or (3) a national application that claims domestic/ foreign priority to the corresponding PCT application, or (4) a national application which forms the basis for the priority claim in the corresponding PCT application, or (5) a continuing application of a U.S. application that satisfies one of (1) to (4) above, or (6) a U.S. application that claims domestic benefit to a U.S. provisional application which forms the basis for the priority claim in the corresponding PCT application.

The corresponding PCT application number(s) is/are: PCT/JP2011/001049

The international date of the corresponding PCT application(s) is/are: February 24, 2011

I. List of Required Documents:

a. A copy of the latest international work product (WO/ISA, WO/IPEA, or IPER) in the above–identified corresponding PCT application(s)

[X] is attached. (Including the explanation rebutting the Observation in Box VIII)
[ ] is not attached because the document is already in the U.S. application.

b. A copy of all claims which were indicated as having novelty, inventive step and industrial applicability in the above-identified corresponding PCT application(s).

[X] is attached.
[ ] is not attached because the document is already in the U.S. application.

c. English translations of the documents in a. and b. above are attached (if the documents are not in the English language). A statement that the English translation is accurate is attached for the document in b. above.

d. (1) An information disclosure statement listing the documents cited in the international work products (ISR, WO/ISA, WO/IPEA, IPER) of the corresponding PCT application.

[ ] is attached.
[X] Has already been filed in the above-identified U.S. application on August 5, 2011.

(2) Copies of all documents (except for U.S. patents or U.S. patent application publications)

[ ] Are attached.
[X] Have already been filed in the above-identified U.S. application on August 5, 2011.

This collection of information is required by 35 U.S.C. 119, 37 CFR 1.55, and 37 CFR 1.102(d). The information is required to obtain or retain a benefit by the public, which is to file (and by the USPTO to process) an application. Confidentiality is governed by 35 U.S.C. 122 and 37 CFR 1.11 and 1.14. This collection is estimated to take 2 hours to complete, including gathering, preparing, and submitting the completed application form to the USPTO. Time will vary depending upon the individual case. Any comments on the amount of time you require to complete this form and/or suggestions for reducing this burden should be sent to the Chief Information Officer, U.S. Patent and Trademark Office, U.S. Department of Commerce, P.O. Box 1450, Alexandria, VA 22313-1450. DO NOT SEND FEES OR COMPLETED FORMS TO THIS ADDRESS.

Modified PTO/SB/20PCT-JP (01-2010)
Approved for use through 01/31/2012. OMB 0651-0058
U.S. Patent and Trademark Office; U.S. DEPARTMENT OF COMMERCE
Under the Paperwork Reduction Act of 1995, no persons are required to respond to a collection of information unless it displays a valid OMB control number.

REQUEST FOR PARTICIPATION IN THE PCT-PPH PILOT PROGRAM BETWEEN THE JPO AND THE USPTO

(continued)

Application No.:	13/148,129
First Named Inventor:	Kyohei YOSHINO et al.

II. Claims Correspondence Table:

Claims in US Application	Patentable Claims in the corresponding PCT Application	Explanation regarding the correspondence
1	1	Same
2	2	Same
3	3	US Claim amended to correct minor error
4	4	Same
5	5	US Claim amended to remove multiple claim dependency

III. All the claims in the US application sufficiently correspond to the patentable claims in the corresponding PCT application.

Signature /Jeffrey R. Filipek/ 2011.08.05 16:32:55 -04'00'	Date: August 5, 2011
Name: (Print/Type) Jeffrey R. Filipek	Registration No. 41,471

Ce

PATENT COOPERATION TREATY

From THE JAPAN PATENT OFFICE

INTERNATIONAL SEARCHING AUTHORITY

To:
PANASONIC CORPORATION
Attn. Naito, Hiroki
1006, Oaza Kadoma
Kadoma-shi
Osaka 571-8501
JAPAN

PCT

WRITTEN OPINION OF THE
INTERNATIONAL SEARCHING AUTHORITY
(Implementing Regulation 40 bis 2)
(PCT Rule 43*bis*.1)

Date of mailing *(day/month/year)*	05.04.2011
Applicant's or agent's file reference: P605455P0	**FOR FURTHER ACTION** See paragraph 2 below

International application No.	International filing date *(day/month/year)*	Priority date *(day/month/year)*
PCT/JP2011/001049	24.02.2011	01.03.2010

International Patent Classification (IPC) Int. Cl. H01J11/02(2006.01)i, H01J17/24(2006.01)i

Applicant
PANASONIC CORPORATION

1. This opinion contains indications relating to the following items:

- ☒ Box No. I Basis of the opinion
- ☐ Box No. II Priority
- ☐ Box No. III Non-establishment of opinion with regard to novelty, inventive step and industrial applicability
- ☐ Box No. IV Lack of unity of invention
- ☒ Box No. V Reasoned statement under Rule 43*bis*.1(a)(i) with regard to novelty, inventive step or industrial applicability; citations and explanations supporting such statement
- ☐ Box No. VI Certain documents cited
- ☐ Box No. VII Certain defects in the international application
- ☒ Box No. VIII Certain observations on the international application

2. **FURTHER ACTION**

If a demand for international preliminary examination is made, this opinion will be considered to be a written opinion of the International Preliminary Examining Authority ("IPEA") except that this does not apply where the applicant chooses an Authority other than this one to be the IPEA and the chosen IPEA has notified the International Bureau under Rule 66.1*bis*(b) that written opinions of this International Searching Authority will not be so considered.

If this opinion is, as provided above, considered to be a written opinion of the IPEA, the applicant is invited to submit to the IPEA a written reply together, where appropriate, with amendments, before the expiration of 3 months from the date of mailing of Form PCT/ISA/220 or before the expiration of 22 months from the priority date, whichever expires later.

For further options, see Form PCT/ISA/220.

3. For further details, see notes to Form PCT/ISA/220.

Date of completion of this opinion: 24.03.2011	
Name and mailing address of the ISA/JP Japan Patent Office 3-4-3, Kasumigaseki, Chiyoda-ku, Tokyo 100-8915 Japan	JPO Examiner (Authorized officer) 2G 3207 Tomokazu MURAI Telephone No. 03-3581-1101 (3226)

WRITTEN OPINION OF THE
INTERNATIONAL SEARCHING AUTHORITY

International Application No.
PCT/JP2011/001049

Box No. I Basis of this opinion

1. With regard to the language, this opinion has been established on the basis of:

☒ the international application in the language in which it was filed

☐ a translation of the international application into _____ , which is the language of a translation furnished for the purposes of international search (Rules 12.3(a) and 23.1(b)).

2. ☐ This opinion has been established taking into account the rectification of an obvious mistake authorized by or notified to this Authority under Rule 91 (Rule 43*bis*.1(a))

3. With regard to any nucleotide and/or amino acid sequence disclosed in the international application and necessary to the claimed invention, this opinion has been established on the bases of:

a. format of material

☐ on paper

☐ in electronic form

b. time of filing/furnishing

☐ contained in the international application as filed

☐ filed together with the international application in electronic form

☐ furnished subsequently to this Authority for the purpose of search

4. ☐ In addition, in the case that more than one version or copy of a sequence listing and/or table(s) relating thereto has been filed or furnished, the required statements that the information in the subsequent or additional copies is identical to that in the application as filed or does not go beyond the application as filed, as appropriate, were furnished.

5. Additional comments:

WRITTEN OPINION OF THE
INTERNATIONAL SEARCHING AUTHORITY

International Application No.
PCT/JP2011/001049

Box No. V Reasoned statement under Rule 43 bis.1(a)(i) with regard to novelty, inventive step or industrial applicability; citations and explanations supporting such statement

1. Statement

Novelty (N)	Claims	1-5	YES
	Claims		NO
Inventive step (IS)	Claims	1-5	YES
	Claims		NO
Industrial applicability (IA)	Claims	1-5	YES
	Claims		NO

2. Citations and explanations:

Document 1:

JP 2009-259512 A (Panasonic Corporation) November 05, 2009, entire text; all drawings

& US2010/0085278 A & EP 2200067 A1 & WO 2009/128236 A1 & KR10-2009-0122478 A & CN 101802958 A

Document 2:

JP 2009-258465 A (Panasonic Corporation) November 05, 2009, entire text; all drawings

& US2010/0134466 A & EP 2146336 A1 & WO 2009/128247 A1 & KR10-2010-0009601 A & CN 101772796 A

Document 3:

JP 2009-266405 A (Panasonic Corporation) November 12, 2009, entire text; all drawings

& WO 2009/130874 A1 & KR10-2009-0130339 A

Documents 1-3 listed above are cited in the ISR.

The inventions as in claims 1-5 are neither described nor suggested in any of Documents 1-3 listed above and would not be obvious to a person skilled in the art.

WRITTEN OPINION OF THE
INTERNATIONAL SEARCHING AUTHORITY

International Application No.
PCT/JP2011/001049

Box No. VIII Certain observations on the international application

The following observations on the clarity of the claims, description, and drawings or on the question whether the claims are fully supported by the description, are made:

Based on the reasons described so far, the inventions recited in claims 1–5 are unclear.

It is recited in claim 1 that the base layer includes at least the first metallic oxide and the second metallic oxide, and the peak through the X-ray diffraction analysis of the base layer is present at an intermediate position between the peak through the X-ray diffraction analysis of the first metallic oxide and the peak through the X-ray diffraction analysis of the second metallic oxide.

As far as the base layer includes two metallic oxides which are the first metallic oxide and the second metallic oxide, "the peak through the X-ray diffraction analysis of the base layer is present at an intermediate position between the peak through the X-ray diffraction analysis of the first metallic oxide and the peak through the X-ray diffraction analysis of the second metallic oxide" can be clearly understood. In the case of the base layer including at least three metallic oxides, however, it is unclear which ones of the at least three metallic oxides are called the first metallic oxide and the second metallic oxide, failing to clearly define "the peak through the X-ray diffraction analysis of the base layer is present at an intermediate position between the peak through the X-ray diffraction analysis of the first metallic oxide and the peak through the X-ray diffraction analysis of the second metallic oxide".

特許協力条約

発信人　日本国特許庁（国際調査機関）

代理人
内藤　浩樹
様

あて名
〒571-8501
日本国大阪府門真市大字門真１００６番地パナソニック株式会社内

ＰＣＴ
国際調査機関の見解書
（法施行規則第40条の2）
［ＰＣＴ規則43の2.1］

発送日 （日.月.年）	０５．０４．２０１１
出願人又は代理人の書類記号　P605455P0	今後の手続きについては、下記２を参照すること。

国際出願番号	国際出願日	優先日
ＰＣＴ／ＪＰ２０１１／００１０４９	（日.月.年）　２４．０２．２０１１	（日.月.年）　０１．０３．２０１０

国際特許分類（ＩＰＣ）Int.Cl. H01J11/02(2006.01)i, H01J17/24(2006.01)i

出願人（氏名又は名称）
パナソニック株式会社

１．この見解書は次の内容を含む。

- ☑ 第Ｉ欄　見解の基礎
- ☐ 第Ⅱ欄　優先権
- ☐ 第Ⅲ欄　新規性、進歩性又は産業上の利用可能性についての見解の不作成
- ☐ 第Ⅳ欄　発明の単一性の欠如
- ☑ 第Ⅴ欄　ＰＣＴ規則43の2.1(a)(i)に規定する新規性、進歩性又は産業上の利用可能性についての見解、それを裏付けるための文献及び説明
- ☐ 第Ⅵ欄　ある種の引用文献
- ☐ 第Ⅶ欄　国際出願の不備
- ☑ 第Ⅷ欄　国際出願に対する意見

２．今後の手続き
国際予備審査の請求がされた場合は、出願人がこの国際調査機関とは異なる国際予備審査機関を選択し、かつ、その国際予備審査機関がＰＣＴ規則66.1の2(b)の規定に基づいて国際調査機関の見解書を国際予備審査機関の見解書とみなさない旨を国際事務局に通知していた場合を除いて、この見解書は国際予備審査機関の最初の見解書とみなされる。

この見解書が上記のように国際予備審査機関の見解書とみなされる場合、様式ＰＣＴ／ＩＳＡ／２２０を送付した日から３月又は優先日から２２月のうちいずれか遅く満了する期限が経過するまでに、出願人は国際予備審査機関に、適当な場合は補正書とともに、答弁書を提出することができる。

さらなる選択肢は、様式ＰＣＴ／ＩＳＡ／２２０を参照すること。

３．さらなる詳細は、様式ＰＣＴ／ＩＳＡ／２２０の備考を参照すること。

見解書を作成した日
２４．０３．２０１１

名称及びあて先	特許庁審査官（権限のある職員）	２Ｇ	３２０７
日本国特許庁（ＩＳＡ／ＪＰ） 郵便番号１００－８９１５ 東京都千代田区霞が関三丁目４番３号	村井　友和 電話番号　０３－３５８１－１１０１　内線　３２２６		

様式ＰＣＴ／ＩＳＡ／２３７（表紙）（２００９年７月）

国際調査機関の見解書

国際出願番号　ＰＣＴ／ＪＰ２０１１／００１０４９

第Ｉ欄　見解の基礎

１．言語に関し、この見解書は以下のものに基づき作成した。

☑ 出願時の言語による国際出願

☐ 出願時の言語から国際調査のための言語である ＿＿＿＿＿＿ 語に翻訳された、この国際出願の翻訳文（ＰＣＴ規則12.3(a)及び23.1(b)）

２．☐ この見解書は、ＰＣＴ規則 91 の規定により国際調査機関が認めた又は国際調査機関に通知された明らかな誤りの訂正を考慮して作成した（ＰＣＴ規則 43 の 2.1(b)）。

３．この国際出願で開示されたヌクレオチド又はアミノ酸配列に関して、提出された以下の配列表に基づき見解書を作成した。

ａ．提出手段　☐ 紙形式

☐ 電子形式

ｂ．提出時期　☐ 出願時の国際出願に含まれていたもの

☐ この国際出願と共に電子形式により提出されたもの

☐ 出願後に、調査のために、この国際調査機関に提出されたもの

４．☐ さらに、複数の版の配列表又は配列表の写しを提出した場合、出願後に提出した配列の写し若しくは追加して提出した配列の写しが、出願時に提出した配列と同一である旨又は出願時の開示を超える事項を含まない旨の陳述書の提出があった。

５．補足意見：

国際調査機関の見解書

国際出願番号　ＰＣＴ／ＪＰ２０１１／００１０４９

第Ｖ欄　新規性、進歩性又は産業上の利用可能性についてのＰＣＴ規則 43 の 2.1(a)(i)に定める見解、それを裏付ける文献及び説明

１．　見解

新規性（N）	請求項	1-5	有
	請求項		無
進歩性（ＩＳ）	請求項	1-5	有
	請求項		無
産業上の利用可能性（ＩＡ）	請求項	1-5	有
	請求項		無

２．　文献及び説明

文献１：
JP 2009-259512 A(パナソニック株式会社)2009.11.05,全文、全図
& US 2010/0085278 A & EP 2200067 A1 & WO 2009/128236 A1 & KR 10-2009-0122478 A & CN 101802958 A

文献２：
JP 2009-258465 A(パナソニック株式会社)2009.11.05,全文、全図
& US 2010/0134466 A & EP 2146336 A1 & WO 2009/128247 A1 & KR 10-2010-0009601 A & CN 101772796 A

文献３：
JP 2009-266405 A(パナソニック株式会社)2009.11.12,全文、全図
& WO 2009/130874 A1 & KR 10-2009-0130339 A

前記文献１－３は国際調査報告で引用された文献である。

請求項１－５に係る発明は、前記文献１－３に記載も示唆もされていないし、当業者にとって自明でもない。

第Ⅷ欄　国際出願に対する意見

請求の範囲、明細書及び図面の明瞭性又は請求の範囲の明細書による十分な裏付についての意見を次に示す。

次のことから、請求項１－５は明確でない。

請求項１には、下地層が少なくとも第１の金属酸化物と第２の金属酸化物を含むこと、及び、下地層のＸ線回折分析におけるピークが、第１の金属酸化物のＸ線回折分析におけるピークと第２の金属酸化物のＸ線回折分析におけるピークの間にあることが記載されている。

下地層が第１の金属酸化物と第２の金属酸化物の２つの金属酸化物を含む場合、前記「下地層のＸ線回折分析におけるピークが、第１の金属酸化物のＸ線回折分析におけるピークと第２の金属酸化物のＸ線回折分析におけるピークの間にある」は意味が明確である。しかし、下地層が３つ以上の金属酸化物を含む場合、３つ以上の金属酸化物の内のどの２つを第１の金属酸化物と第２の金属酸化物と呼んでいるのかが不明であるため、前記「下地層のＸ線回折分析におけるピークが、第１の金属酸化物のＸ線回折分析におけるピークと第２の金属酸化物のＸ線回折分析におけるピークの間にある」は意味が明確でない。

Based on the reasons described so far, we maintain that the inventions recited in claims 1-5 are technically clear.

In the case of the base layer including at least three metallic oxides, of the at least three metallic oxides, the metallic oxides relevant to peaks in two X-ray diffraction analyses between which the peak through the X-ray diffraction analysis of the base layer is present are called the first metallic oxide and the second metallic oxide. In other words, the metallic oxides relevant to peaks in two X-ray diffraction analyses are not called the first metallic oxide and the second metallic oxide unless the peak through the X-ray diffraction analysis of the base layer analysis is present between the peaks.

Therefore, the technical requirement of the base layer including at least three metallic oxides, "the peak through the X-ray diffraction analysis of the base layer is present at an intermediate position between the peak through the X-ray diffraction analysis of the first metallic oxide and the peak through the X-ray diffraction analysis of the second metallic oxide", can be clearly defined.

VERIFICATION OF TRANSLATION

I, Kenta Endo translator of c/o Panasonic Corporation, Intellectual Property Rights Operations Company, IP Solutions Center, 1-15 Matsuo-cho, Kadoma City, Osaka 571-8504, Japan, hereby declare that I am conversant with the English and Japanese languages and am a competent translator thereof. I further declare that to the best of my knowledge and belief the translation of the attached documents made by me is a true and complete translation.

- Claims of PCT/2011/001049 that were identified as having novelty, inventive step and industrial applicability.

Date: July 15, 2011

Signature: Kenta Endo

CLAIMS

1. A plasma display panel comprising:

a front plate; and

a rear plate disposed so as to face the front plate, wherein

the front plate includes a dielectric layer and a protective layer which covers the dielectric layer,

the rear plate includes a base dielectric layer, a plurality of barrier ribs formed on the base dielectric layer, and phosphor layers formed on the base dielectric layer and side surfaces of the barrier ribs,

the protective layer includes a base layer formed on the dielectric layer,

agglomerated particles in which crystal particles of magnesium oxide are agglomerated to one another are dispersed evenly on an entire surface of the base layer,

the base layer includes at least a first metallic oxide and a second metallic oxide, and has at least a peak through an X-ray diffraction analysis,

the peak is present at an intermediate position between a first peak through an X-ray diffraction analysis of the first metallic oxide and a second peak through an X-ray diffraction analysis of the second metallic oxide,

the first peak and the second peak indicate a plane orientation equal to a plane orientation indicated by the peak of the base layer,

the first metallic oxide and the second metallic oxide are two selected from a group consisting of magnesium oxide, calcium oxide, strontium oxide, and barium oxide, and

the phosphor layers include particles of a platinum group element.

2. The plasma display panel according to claim 1, wherein

the phosphor layers include a plurality of phosphor particles, and

an average particle diameter of the particles of the platinum group element is no more than an average particle diameter of the phosphor particles.

3. The plasma display panel according to claim 2, wherein

the average particle diameter of the particles of the platinum group element is no less than 1/2 and no more than 1/10 of the average particle diameter of the phosphor particles.

4. The plasma display panel according to claim 3, wherein

the average particle diameter of the particles of the platinum group element is no less than 0.3 μm and no more than 1 μm.

5. The plasma display panel according to any one of claims 1 to 4, wherein

the particles of the platinum group element adhere to at least a part of surfaces of the phosphor layers.

5

【書類名】請求の範囲

【請求項１】

前面板と、

前記前面板と対向配置された背面板と、を備え、

前記前面板は、誘電体層と前記誘電体層を覆う保護層とを有し、

前記背面板は、下地誘電体層と、前記下地誘電体層上に形成された複数の隔壁と、前記下地誘電体層上および前記隔壁の側面に形成された蛍光体層と、を有し、

前記保護層は、前記誘電体層上に形成された下地層を含み、

前記下地層には、酸化マグネシウムの結晶粒子が複数個凝集した凝集粒子が全面に亘って分散配置され、

前記下地層は、少なくとも第１の金属酸化物と第２の金属酸化物とを含み、

さらに、前記下地層は、Ｘ線回折分析において少なくとも一つのピークを有し、

前記ピークは、第１金属酸化物のＸ線回折分析における第１のピークと、第２金属酸化物のＸ線回折分析における第２のピークと、の間にあり、

前記第１のピークおよび前記第２のピークは、前記ピークが示す面方位と同じ面方位を示し、

前記第１の金属酸化物および前記第２の金属酸化物は、酸化マグネシウム、酸化カルシウム、酸化ストロンチウムおよび酸化バリウムからなる群の中から選ばれる２種であり、

前記蛍光体層は、白金族元素の粒子を含む、

プラズマディスプレイパネル。

【請求項２】

請求項１に記載のプラズマディスプレイパネルであって、

前記蛍光体層は、複数の蛍光体粒子を含み、

前記白金族元素の粒子の平均粒径は、前記蛍光体粒子の平均粒径以下であるプラズマディスプレイパネル。

【請求項３】

請求項２に記載のプラズマディスプレイパネルであって、

前記白金族元素の粒子の平均粒径は、前記蛍光体粒子の平均粒径の１／２以上１／１０以下である、

プラズマディスプレイパネル。

【請求項４】

請求項３に記載のプラズマディスプレイパネルであって、

前記白金族元素の粒子の平均粒径は、０．３μｍ以上１μｍ以下である、

プラズマディスプレイパネル。

【請求項５】

請求項１から請求項４のいずれか一項に記載のプラズマディスプレイパネルであって、

前記白金族元素の粒子は、前記蛍光体層の少なくとも一部の表面に付着している、

プラズマディスプレイパネル。

Modified PTO/SB/20PCT-JP (01-2010)
Approved for use through 01/31/2012. OMB 0651-0058
U.S. Patent and Trademark Office; U.S. DEPARTMENT OF COMMERCE
Under the Paperwork Reduction Act of 1995, no persons are required to respond to a collection of information unless it displays a valid OMB control number.

REQUEST FOR PARTICIPATION IN THE PATENT COOPERATION TREATY - PATENT PROSECUTION HIGHWAY (PCT-PPH) PILOT PROGRAM BETWEEN THE JAPAN PATENT OFFICE (JPO) AND THE USPTO

Application No.:	13/148,152	Filing Date:	August 5, 2011
First Named Inventor:	Eiji TAKEDA et al.	Attorney Docket No.:	2011_1108A
Title of the Invention:	METHOD FOR PRODUCING PLASMA DISPLAY PANEL		

THIS REQUEST FOR PARTICIPATION IN THE PCT-PPH PILOT PROGRAM ALONG WITH THE REQUIRED DOCUMENTS MUST BE SUBMITTED VIA EFS-WEB. INFORMATION REGARDING EFS-WEB IS AVAILABLE AT HTTP://WWW.USPTO.GOV/EBC/EFS_HELP.HTML

APPLICANT HEREBY REQUESTS PARTICIPATION IN THE PCT-PPH PROGRAM AND PETITIONS TO MAKE THE ABOVE-IDENTIFIED APPLICATION SPECIAL UNDER THE PCT-PPH PROGRAM.

The above-identified application is (1) a national stage entry of the corresponding PCT application, or (2) a national stage entry of another PCT application which claims priority to the corresponding PCT application, or (3) a national application that claims domestic/ foreign priority to the corresponding PCT application, or (4) a national application which forms the basis for the priority claim in the corresponding PCT application, or (5) a continuing application of a U.S. application that satisfies one of (1) to (4) above, or (6) a U.S. application that claims domestic benefit to a U.S. provisional application which forms the basis for the priority claim in the corresponding PCT application.

The corresponding PCT application number(s) is/are:

The international date of the corresponding PCT application(s) is/are:

I. List of Required Documents:

a. A copy of the latest international work product (WO/ISA, WO/IPEA, or IPER) in the above–identified corresponding PCT application(s)

[X] is attached.
[ ] is not attached because the document is already in the U.S. application.

b. A copy of all claims which were indicated as having novelty, inventive step and industrial applicability in the above-identified corresponding PCT application(s).

[X] is attached.
[ ] is not attached because the document is already in the U.S. application.

c. English translations of the documents in a. and b. above are attached (if the documents are not in the English language). A statement that the English translation is accurate is attached for the document in b. above.

d. (1) An information disclosure statement listing the documents cited in the international work products (ISR, WO/ISA, WO/IPEA, IPER) of the corresponding PCT application.

[ ] is attached.
[X] Has already been filed in the above-identified U.S. application on August 5, 2011.

(2) Copies of all documents (except for U.S. patents or U.S. patent application publications)

[ ] Are attached.
[X] Have already been filed in the above-identified U.S. application on August 5, 2011.

This collection of information is required by 35 U.S.C. 119, 37 CFR 1.55, and 37 CFR 1.102(d). The information is required to obtain or retain a benefit by the public, which is to file (and by the USPTO to process) an application. Confidentiality is governed by 35 U.S.C. 122 and 37 CFR 1.11 and 1.14. This collection is estimated to take 2 hours to complete, including gathering, preparing, and submitting the completed application form to the USPTO. Time will vary depending upon the individual case. Any comments on the amount of time you require to complete this form and/or suggestions for reducing this burden should be sent to the Chief Information Officer, U.S. Patent and Trademark Office, U.S. Department of Commerce, P.O. Box 1450, Alexandria, VA 22313-1450. DO NOT SEND FEES OR COMPLETED FORMS TO THIS ADDRESS.

Under the Paperwork Reduction Act of 1995, no persons are required to respond to a collection of information unless it displays a valid OMB control number.

REQUEST FOR PARTICIPATION IN THE PCT-PPH PILOT PROGRAM BETWEEN THE JPO AND THE USPTO

(continued)

Application No.:	13/148,152
First Named Inventor:	Eiji TAKEDA et al.

II. Claims Correspondence Table:

Claims in US Application	Patentable Claims in the corresponding PCT Application	Explanation regarding the correspondence
1	1	Same
2	2	Same
3	3	Same
4	4	Same
5	5	Same

III. All the claims in the US application sufficiently correspond to the patentable claims in the corresponding PCT application.

Signature /Jeffrey R. Filipek/ 2011.08.05 17:04:06 -04'00'	Date: August 5, 2011
Name: (Print/Type) Jeffrey R. Filipek	Registration No. 41,471

6

PATENT COOPERATION TREATY

From THE JAPAN PATENT OFFICE

INTERNATIONAL SEARCHING AUTHORITY

To:
PANASONIC CORPORATION
Attn. Naito, Hiroki
1006, Oaza Kadoma
Kadoma-shi
Osaka 571-8501
JAPAN

PCT

WRITTEN OPINION OF THE
INTERNATIONAL SEARCHING AUTHORITY
(Implementing Regulation 40 bis 2)
(PCT Rule 43*bis*.1)

Date of mailing *(day/month/year)*	12.04.2011
Applicant's or agent's file reference P605967P0	**FOR FURTHER ACTION** See paragraph 2 below

International application No.	International filing date *(day/month/year)*	Priority date *(day/month/year)*
PCT/JP2011/001528	16.03.2011	26.03.2010

International Patent Classification (IPC) Int. Cl. H01J9/02(2006.01)i, H01J11/02(2006.01)i

Applicant
PANASONIC CORPORATION

1. This opinion contains indications relating to the following items:

- ☒ Box No. I Basis of the opinion
- ☐ Box No. II Priority
- ☐ Box No. III Non-establishment of opinion with regard to novelty, inventive step and industrial applicability
- ☐ Box No. IV Lack of unity of invention
- ☒ Box No. V Reasoned statement under Rule 43*bis*.1(a)(i) with regard to novelty, inventive step or industrial applicability; citations and explanations supporting such statement
- ☒ Box No. VI Certain documents cited
- ☐ Box No. VII Certain defects in the international application
- ☐ Box No. VIII Certain observations on the international application

2. **FURTHER ACTION**

If a demand for international preliminary examination is made, this opinion will be considered to be a written opinion of the International Preliminary Examining Authority ("IPEA") except that this does not apply where the applicant chooses an Authority other than this one to be the IPEA and the chosen IPEA has notified the International Bureau under Rule 66.1*bis*(b) that written opinions of this International Searching Authority will not be so considered.

If this opinion is, as provided above, considered to be a written opinion of the IPEA, the applicant is invited to submit to the IPEA a written reply together, where appropriate, with amendments, before the expiration of 3 months from the date of mailing of Form PCT/ISA/220 or before the expiration of 22 months from the priority date, whichever expires later.

For further options, see Form PCT/ISA/220.

3. For further details, see notes to Form PCT/ISA/220.

Date of completion of this opinion 31.03.2011	
Name and mailing address of the ISA/JP Japan Patent Office 3-4-3, Kasumigaseki, Chiyoda-ku, Tokyo 100-8915 Japan	JPO Examiner (Authorized officer) 2G 9806 Gou YAMAGUCHI Telephone No. 03-3581-1101 (3226)

WRITTEN OPINION OF THE
INTERNATIONAL SEARCHING AUTHORITY

International Application No.
PCT/JP2011/001528

Box No. I Basis of this opinion

1. With regard to the language, this opinion has been established on the basis of:

☒ the international application in the language in which it was filed

☐ a translation of the international application into _____ , which is the language of a translation furnished for the purposes of international search (Rules 12.3(a) and 23.1(b)).

2. ☐ This opinion has been established taking into account the rectification of an obvious mistake authorized by or notified to this Authority under Rule 91 (Rule 43*bis*.1(a))

3. With regard to any nucleotide and/or amino acid sequence disclosed in the international application and necessary to the claimed invention, this opinion has been established on the bases of:

a. format of material

☐ on paper

☐ in electronic form

b. time of filing/furnishing

☐ contained in the international application as filed

☐ filed together with the international application in electronic form

☐ furnished subsequently to this Authority for the purpose of search

4. ☐ In addition, in the case that more than one version or copy of a sequence listing and/or table(s) relating thereto has been filed or furnished, the required statements that the information in the subsequent or additional copies is identical to that in the application as filed or does not go beyond the application as filed, as appropriate, were furnished.

5. Additional comments:

WRITTEN OPINION OF THE
INTERNATIONAL SEARCHING AUTHORITY

International Application No.
PCT/JP2011/001528

Box No. V Reasoned statement under Rule 43 bis.1(a)(i) with regard to novelty, inventive step or industrial applicability; citations and explanations supporting such statement

1. Statement

Novelty (N)	Claims	1-5	YES
	Claims		NO
Inventive step (IS)	Claims	1-5	YES
	Claims		NO
Industrial applicability (IA)	Claims	1-5	YES
	Claims		NO

2. Citations and explanations:

Document 1: JP 2009-129616 A (Panasonic Corporation) June 11, 2009
Document 2: WO 2009/044456 A1 (Hitachi, Ltd.) April 9, 2009

Claims 1–5

None of the inventions in claims 1–5 is disclosed in any of the documents cited in the ISR, and therefore these inventions meet the requirements for novelty and inventive step.

It is emphasized that none of the documents discloses forming a base layer on a dielectric layer; spreading a first organic solvent on the base layer to form a first coating layer, next spreading a second organic solvent in which agglomerated particles are dispersed on the first coating layer to form a second coating layer, and then heating the first and second coating layers to evaporate the first and second organic solvents and further to disperse the agglomerated particles on the base layer.

WRITTEN OPINION OF THE
INTERNATIONAL SEARCHING AUTHORITY

International Application No.
PCT/JP2011/001528

Box No. VI Certain documents cited

1. Certain published documents (Rules 43*bis*.1 and 70.10)

Application No. Patent No.	Publication date *(day/month/year)*	Filing date *(day/month/year)*	Priority date (valid claim) *(day/month/year)*
JP 2010-80388 A [E,A]	08.04.2010	29.09.2008	

2. Non-written disclosures (Rules 43*bis*.1 and 70.9)

Kind of non-written disclosure	Date of non-written disclosure *(day/month/year)*	Date of written disclosure referring to non-written disclosure *(day/month/year)*

特 許 協 力 条 約

発信人　日本国特許庁（国際調査機関）

代理人
内藤　浩樹
様

あて名
〒571-8501
大阪府門真市大字門真１００６番地
パナソニック株式会社内

ＰＣＴ
国際調査機関の見解書
（法施行規則第40条の2）
〔ＰＣＴ規則43の2.1〕

発送日 （日.月.年）	１２．０４．２０１１
出願人又は代理人 の書類記号　P605967P0	今後の手続きについては、下記２を参照すること。

国際出願番号	国際出願日	優先日
ＰＣＴ／ＪＰ２０１１／００１５２８	（日.月.年）　１６．０３．２０１１	（日.月.年）　２６．０３．２０１０

国際特許分類（ＩＰＣ）Int.Cl. H01J9/02(2006.01)i, H01J11/02(2006.01)i

出願人（氏名又は名称）
パナソニック株式会社

１．この見解書は次の内容を含む。

- ☑ 第Ⅰ欄　見解の基礎
- ☐ 第Ⅱ欄　優先権
- ☐ 第Ⅲ欄　新規性、進歩性又は産業上の利用可能性についての見解の不作成
- ☐ 第Ⅳ欄　発明の単一性の欠如
- ☑ 第Ⅴ欄　ＰＣＴ規則43の2.1(a)(i)に規定する新規性、進歩性又は産業上の利用可能性についての見解、それを裏付けるための文献及び説明
- ☑ 第Ⅵ欄　ある種の引用文献
- ☐ 第Ⅶ欄　国際出願の不備
- ☐ 第Ⅷ欄　国際出願に対する意見

２．今後の手続き

国際予備審査の請求がされた場合は、出願人がこの国際調査機関とは異なる国際予備審査機関を選択し、かつ、その国際予備審査機関がＰＣＴ規則66.1の2(b)の規定に基づいて国際調査機関の見解書を国際予備審査機関の見解書とみなさない旨を国際事務局に通知していた場合を除いて、この見解書は国際予備審査機関の最初の見解書とみなされる。

この見解書が上記のように国際予備審査機関の見解書とみなされる場合、様式ＰＣＴ／ＩＳＡ／２２０を送付した日から３月又は優先日から２２月のうちいずれか遅く満了する期限が経過するまでに、出願人は国際予備審査機関に、適当な場合は補正書とともに、答弁書を提出することができる。

さらなる選択肢は、様式ＰＣＴ／ＩＳＡ／２２０を参照すること。

３．さらなる詳細は、様式ＰＣＴ／ＩＳＡ／２２０の備考を参照すること。

見解書を作成した日
３１．０３．２０１１

名称及びあて先	特許庁審査官（権限のある職員）	２Ｇ	９８０６
日本国特許庁（ＩＳＡ／ＪＰ） 郵便番号１００－８９１５ 東京都千代田区霞が関三丁目４番３号	山口　剛 電話番号　０３－３５８１－１１０１　内線　３２２６		

国際調査機関の見解書

国際出願番号 PCT／JP2011／001528

第Ⅰ欄 見解の基礎

1．言語に関し、この見解書は以下のものに基づき作成した。

☑ 出願時の言語による国際出願

☐ 出願時の言語から国際調査のための言語である ＿＿＿＿＿＿ 語に翻訳された、この国際出願の翻訳文（ＰＣＴ規則12.3(a)及び23.1(b)）

2．☐ この見解書は、ＰＣＴ規則 91 の規定により国際調査機関が認めた又は国際調査機関に通知された明らかな誤りの訂正を考慮して作成した（ＰＣＴ規則 43 の 2.1(b)）。

3．この国際出願で開示されたヌクレオチド又はアミノ酸配列に関して、提出された以下の配列表に基づき見解書を作成した。

a．提出手段 ☐ 紙形式

☐ 電子形式

b．提出時期 ☐ 出願時の国際出願に含まれていたもの

☐ この国際出願と共に電子形式により提出されたもの

☐ 出願後に、調査のために、この国際調査機関に提出されたもの

4．☐ さらに、複数の版の配列表又は配列表の写しを提出した場合、出願後に提出した配列の写し若しくは追加して提出した配列の写しが、出願時に提出した配列と同一である旨又は出願時の開示を超える事項を含まない旨の陳述書の提出があった。

5．補足意見：

国際調査機関の見解書

国際出願番号 ＰＣＴ／ＪＰ２０１１／００１５２８

第Ｖ欄　新規性、進歩性又は産業上の利用可能性についてのＰＣＴ規則43の2.1(a)(i)に定める見解、それを裏付ける文献及び説明

１．　見解

新規性（N）	請求項	１－５	有
	請求項		無
進歩性（ＩＳ）	請求項	１－５	有
	請求項		無
産業上の利用可能性（ＩＡ）	請求項	１－５	有
	請求項		無

２．　文献及び説明

文献１：JP 2009-129616 A（パナソニック株式会社）2009.06.11

文献２：WO 2009/044456 A1（株式会社日立製作所）2009.04.09

請求項１－５

請求項１－５に係る発明は、国際調査報告で引用された上記何れの文献にも開示されておらず、新規性及び進歩性を有する。

特に、誘電体層上に下地層を形成し、続けて、第１の有機溶剤を前記下地層上に塗布することにより第１の塗布層を形成し、次に、凝集粒子を分散させた第２の有機溶剤を前記第１の塗布層上に塗布することにより第２の塗布層を形成し、次に、前記第１の塗布層および前記第２の塗布層を加熱することにより前記第１の有機溶剤および前記第２の有機溶剤を蒸発させ、かつ、前記凝集粒子を前記下地層上に分散配置する点については、上記何れの文献にも開示されていない。

国際調査機関の見解書

国際出願番号　ＰＣＴ／ＪＰ２０１１／００１５２８

第VI欄　ある種の引用文献

１．　ある種の公表された文書（ＰＣＴ規則43の2.1及び70.10）

出願番号 特許番号	公知日 （日．月．年）	出願日 （日．月．年）	優先日（有効な優先権の主張） （日．月．年）
JP 2010-80388 A ［E，A］	2010.04.08	2008.09.29	

２．　書面による開示以外の開示（ＰＣＴ規則43の2.1及び70.9）

書面による開示以外の開示の種類	書面による開示以外の開示の日付 （日．月．年）	書面による開示以外の開示に言及している書面の日付（日．月．年）

VERIFICATION OF TRANSLATION

I, Kenta Endo translator of c/o Panasonic Corporation, Intellectual Property Rights Operations Company, IP Solutions Center, 1-15 Matsuo-cho, Kadoma City, Osaka 571-8504, Japan, hereby declare that I am conversant with the English and Japanese languages and am a competent translator thereof. I further declare that to the best of my knowledge and belief the translation of the attached documents made by me is a true and complete translation.

- Claims of PCT/JP2011/001528 that were identified as having novelty, inventive step and industrial applicability.

Date: July 15, 2011

Signature: Kenta Endo

CLAIMS

1. A method for producing a plasma display panel having a rear plate and a front plate disposed so as to face the rear plate, wherein

the front plate includes a dielectric layer and a protective layer which covers the dielectric layer, the protective layer including a base layer formed on the dielectric layer,

agglomerated particles in which crystal particles of magnesium oxide are agglomerated to one another are dispersed evenly on an entire surface of the base layer,

the base layer includes at least a first metallic oxide and a second metallic oxide, and has at least a peak through an X-ray diffraction analysis,

the peak of the base layer is present at an intermediate position between a first peak through an X-ray diffraction analysis of the first metallic oxide and a second peak through an X-ray diffraction analysis of the second metallic oxide,

the first peak and the second peak indicate a plane orientation equal to a plane orientation indicated by the peak of the base layer, and

the first metallic oxide and the second metallic oxide are two selected from a group consisting of magnesium oxide, calcium oxide, strontium oxide, and barium oxide,

the method for producing the plasma display panel comprising:

forming the base layer on the dielectric layer; then

spreading a first organic solvent on the base layer to form a first coating layer; next

spreading a second organic solvent in which the agglomerated particles are dispersed on the first coating layer to form a second coating layer; and then

heating the first and second coating layers to evaporate the first and second organic solvents and further to disperse the agglomerated particles on the base layer.

2. The method for producing the plasma display panel according to claim 1, comprising:

forming the first coating layer within two hours after the base layer is formed.

3. The method for producing the plasma display panel according to claim 2, comprising:

forming the first coating layer within one hour after the base layer is formed.

4. The method for producing the plasma display panel according to claim 1, wherein

the first organic solvent includes a resin, and

the first coating layer and the second coating layer are heated to evaporate the resin, the first organic solvent, and the second organic solvent, and the agglomerated particles are dispersed on the base layer.

5. The method for producing the plasma display panel according to

claim 1, wherein

the second organic solvent to have a specific gravity no more than a specific gravity of the first organic solvent.

【書類名】請求の範囲

【請求項１】

背面板と、前記背面板と対向配置された前面板と、を備え、

前記前面板は、誘電体層と前記誘電体層を覆う保護層とを有し、

前記保護層は、前記誘電体層上に形成された下地層を含み、

前記下地層には、酸化マグネシウムの結晶粒子が複数個凝集した凝集粒子が全面に亘って分散配置され、

前記下地層は、少なくとも第１の金属酸化物と第２の金属酸化物とを含み、

さらに、前記下地層は、Ｘ線回折分析において少なくとも一つのピークを有し、

前記ピークは、第１金属酸化物のＸ線回折分析における第１のピークと、第２金属酸化物のＸ線回折分析における第２のピークと、の間にあり、

前記第１のピークおよび前記第２のピークは、前記ピークが示す面方位と同じ面方位を示し、

前記第１の金属酸化物および前記第２の金属酸化物は、酸化マグネシウム、酸化カルシウム、酸化ストロンチウムおよび酸化バリウムからなる群の中から選ばれる２種である、

プラズマディスプレイパネルの製造方法であって、

前記誘電体層上に前記下地層を形成し、

続けて、第１の有機溶剤を前記下地層上に塗布することにより第１の塗布層を形成し、

次に、前記凝集粒子を分散させた第２の有機溶剤を前記第１の塗布層上に塗布することにより第２の塗布層を形成し、

次に、前記第１の塗布層および前記第２の塗布層を加熱することにより前記第１の有機溶剤および前記第２の有機溶剤を蒸発させ、かつ、前記凝集粒子を前記下地層上に分散配置する、

ことを備えるプラズマディスプレイパネルの製造方法。

【請求項２】

請求項１に記載のプラズマディスプレイパネルの製造方法であって、

下地層の形成後２時間以内に前記第１の塗布層を形成する、
ことを備えるプラズマディスプレイパネルの製造方法。

【請求項３】

請求項２に記載のプラズマディスプレイパネルの製造方法であって、

下地層の形成後１時間以内に前記第１の塗布層を形成する、
ことを備えるプラズマディスプレイパネルの製造方法。

【請求項４】

請求項１に記載のプラズマディスプレイパネルの製造方法であって、

前記第１の有機溶剤は、樹脂を含み、

第１の塗布層および第２の塗布層を加熱することにより前記樹脂、前記第１の有機溶剤および前記第２の有機溶剤を蒸発させ、かつ、前記凝集粒子を前記下地層上に分散配置する、
プラズマディスプレイパネルの製造方法。

【請求項５】

請求項１に記載のプラズマディスプレイパネルの製造方法であって、

前記第２の有機溶剤の比重は、前記第１の有機溶剤の比重以下である、
ことを備えるプラズマディスプレイパネルの製造方法。

UNITED STATES PATENT AND TRADEMARK OFFICE

UNITED STATES DEPARTMENT OF COMMERCE
United States Patent and Trademark Office
Address: COMMISSIONER FOR PATENTS
P.O. Box 1450
Alexandria, Virginia 22313-1450
www.uspto.gov

APPLICATION NO.	FILING DATE	FIRST NAMED INVENTOR	ATTORNEY DOCKET NO.	CONFIRMATION NO.
13/148,221	08/05/2011	Tomoya Kikuchi	074835-0029	9537

53080 7590 11/07/2011
MCDERMOTT WILL & EMERY LLP
600 13TH STREET, NW
WASHINGTON, DC 20005-3096

EXAMINER
ASSOUAD, PATRICK J

ART UNIT	PAPER NUMBER
2858	

NOTIFICATION DATE	DELIVERY MODE
11/07/2011	ELECTRONIC

Please find below and/or attached an Office communication concerning this application or proceeding.

The time period for reply, if any, is set in the attached communication.

Notice of the Office communication was sent electronically on above-indicated "Notification Date" to the following e-mail address(es):

mweipdocket@mwe.com

UNITED STATES PATENT AND TRADEMARK OFFICE

Commissioner for Patents
United States Patent and Trademark Office
P.O. Box 1450
Alexandria, VA 22313-1450
www.uspto.gov

MCDERMOTT WILL & EMERY LLP
600 13TH STREET, NW
WASHINGTON DC 20005-3096

In re Application of
KIKUCHI *et al.*
Application No.: 13/148,221
Filed: 05 August 2011
Attorney Docket No.: 074835-0029
For: LEAD STORAGE BATTERY CHARGING CONTROL METHOD, CHARGING CONTROL CIRCUIT, POWER SOURCE DEVICE, AND LEAD STORAGE BATTERY

: DECISION ON REQUEST TO
: PARTICIPATE IN THE PATENT
: PROSECUTION HIGHWAY
: PROGRAM AND PETITION
: TO MAKE SPECIAL UNDER
: 37 CFR 1.102(a)

This is a decision on the request to participate in the Patent Prosecution Highway (PPH) program and the petition under 37 CFR 1.102(a), filed 29 August 2011, to make the above-identified application special.

The request and petition are **GRANTED**.

Discussion

A grantable request to participate in the PPH pilot program and petition to make special require:

1. The U.S. application is
    a. a Paris Convention application which either
        i. validly claims priority under 35 U.S.C. 119(a) and 37 CFR 1.55 to one or more applications filed in the JPO, or
        ii. validly claims priority to a PCT application that contains no priority claims, or
    b. a national stage application under the PCT (an application which entered the national stage in the U.S. from a PCT international application after compliance with 35 U.S.C. 371), which PCT application
        i. validly claims priority to an application filed in the JPO, or
        ii. validly claims priority to a PCT application that contains no priority claims, or
        iii. contains no priority claim, or
    c. a so-called bypass application filed under 35 U.S.C. 111(a) which validly claims benefit under 35 U.S.C. 120 to a PCT application, which PCT application
        i. validly claims priority to an application filed in the JPO, or

ii. validly claims priority to a PCT application that contains no priority claims, or
iii. contains no priority claim;

2. Applicant must submit a copy of:
   a. The allowable/patentable claim(s) from the JPO application(s);
   b. An English translation of the allowable/patentable claim(s) and
   c. A statement that the English translation is accurate;
3. Applicant must:
   a. Ensure all the claims in the U.S. application must sufficiently correspond or be amended to sufficiently correspond to the allowable/patentable claim(s) in the JPO application(s) and
   b. Submit a claims correspondence table in English;
4. Examination of the U.S. application has not begun;
5. Applicant must submit:
   a. Documentation of prior office action:
      i. a copy of the office action(s) just prior to the "Decision to Grant a Patent" from each of the JPO application(s) containing the allowable/patentable claim(s) or
      ii. if the allowable/patentable claims(s) are from a "Notification of Reasons for Refusal" then the Notification of Reasons for Refusal or
      iii. if the JPO application is a first action allowance then no office action from the JPO is necessary should be indicated on the request/petition form;
   b. An English language translation of the JPO Office action from (5)(a)(i)-(ii) above
   c. A statement that the English translation is accurate;
6. Applicant must submit:
   a. An IDS listing the documents cited by the JPO examiner in the JPO office action (unless already submitted in this application)
   b. Copies of the documents except U.S. patents or U.S. patent application publications (unless already submitted in this application);

The request to participate in the PPH pilot program and petition comply with the above requirements. Accordingly, the above-identified application has been accorded "special" status.

Inquiries concerning this decision should be directed to Michael Day at 571-272-1568.

All other inquiries concerning the examination or status of the application is accessible in the PAIR system at http://www.uspto.gov/ebc.index.html.

This application will be forwarded to the examiner for action on the merits commensurate with this decision once this application's formality reviews have been completed.

/Michael Day/

Michael Day
Quality Assurance Specialist
Technology Center 2800

UNITED STATES PATENT AND TRADEMARK OFFICE

UNITED STATES DEPARTMENT OF COMMERCE
United States Patent and Trademark Office
Address: COMMISSIONER FOR PATENTS
P.O. Box 1450
Alexandria, Virginia 22313-1450
www.uspto.gov

APPLICATION NO.	FILING DATE	FIRST NAMED INVENTOR	ATTORNEY DOCKET NO.	CONFIRMATION NO.
13/148,246	08/05/2011	Peter Edward Timan	034075/406807	9708

826 7590 10/25/2011
ALSTON & BIRD LLP
BANK OF AMERICA PLAZA
101 SOUTH TRYON STREET, SUITE 4000
CHARLOTTE, NC 28280-4000

EXAMINER

ART UNIT	PAPER NUMBER
3617	

MAIL DATE	DELIVERY MODE
10/25/2011	PAPER

Please find below and/or attached an Office communication concerning this application or proceeding.

The time period for reply, if any, is set in the attached communication.

UNITED STATES PATENT AND TRADEMARK OFFICE

Commissioner for Patents
United States Patent and Trademark Office
P.O. Box 1450
Alexandria, VA 22313-1450
www.uspto.gov

OCT 2 5 2011

ALSTON & BIRD LLP
BANK OF AMERICA PLAZA
101 SOUTH TRYON STREET, SUITE 4000
CHARLOTTE NC 28280-4000

In re application of Timan et al. Application No. 13/148,246 Filed: August 5, 2011 For: MONORAIL BOGIE HAVING A TRACTION/PITCHING CONTROL ASSEMBLY	**DECISION ON REQUEST TO PARTICIPATE IN PATENT PROSECUTION HIGHWAY PROGRAM AND PETITION TO MAKE SPECIAL UNDER 37 CFR 1.102(a)**

This is a decision on the request to participate in the Patent Prosecution Highway (PPH) program and the petition under 37 CFR 1.102(a), filed August 5, 2011 to make the above-identified application special.

The request and petition are **GRANTED**.

A grantable request to participate in the PPH program and petition to make special require:

(1) The U.S. application must validly claim priority under 35 U.S.C. 119(a) to one or more applications filed in the CIPO;
(2) Applicant must submit a copy of the allowable/patentable claim(s) from the CIPO application(s) along with an English translation thereof and a statement that the English translation is accurate;
(3) All the claims in the U.S. application must sufficiently correspond or be amended to sufficiently correspond to the allowable/patentable claim(s) in the CIPO application(s);
(4) Examination of the U.S. application has not begun;
(5) Applicant must submit a copy of the latest Office action from each of the CIPO application(s) containing the allowable/patentable claim(s) along with an English translation thereof and a statement that the English translation is accurate;
(6) Applicant must submit an IDS listing the documents cited by the CIPO examiner in the CIPO Office action along with copies of documents except U.S. patents or U.S. patent application publications.

The request to participate in the PPH pilot program complies with the above requirements. Therefore, the above-identified application has been accorded "special" status.

All other inquiries concerning the examination or status of the application should be directed to the Patent Application Information Retrieval (PAIR) system.

The application is being forwarded to the examiner for action on the merits commensurate with this decision.

Any inquiry regarding this decision should be directed to Mikado Buiz, Quality Assurance Specialist, at (571) 272-6578.

/ Mikado Buiz /

Mikado Buiz,
Quality Assurance Specialist
Technology Center 3600

MB/MB: 10/24/11

UNITED STATES PATENT AND TRADEMARK OFFICE

Commissioner for Patents
United States Patent and Trademark Office
P.O. Box 1450
Alexandria, VA 22313-1450
www.uspto.gov

MAILED

SEP 02 2011

PCT LEGAL ADMINISTRATION

HOWISON & ARNOTT, L.L.P
P.O. BOX 741715
DALLAS TX 75374-1715

In re Application of: ANDRE, Eric, et al.
U.S. Application No.: 13/148,274
PCT No.: PCT/EP2010/050966
International Filing Date: 28 January 2010
Priority Date: 28 January 2009
Attorney's Docket No.: STER-30,907
For: METHOD AND SYSTEM FOR MEASURING A TIME CONSTANT OF AN INTEGRATED CIRCUIT, AND INTEGRATED CIRCUIT PROVIDED WITH SUCH A SYSTEM

DECISION ON PETITION
(37 CFR 1.137(b))

The petition for revival under 37 CFR 1.137(b) filed 05 August 2011 in the above-captioned application is hereby **GRANTED** as follows:

International application PCT/EP2010/050966 became abandoned with respect to the United States at midnight on 28 July 2011 based on applicants' failure to pay the basic national fee prior to the expiration of thirty months from the priority date.

The present petition for revival was accompanied by payment of the petition fee and the "required reply" in the form of a request for entry into the U.S. national stage and payment of the basic national fee. In addition, the petition includes a statement that "the entire delay in filing the required reply from the due date for the required reply until the filing of a grantable petition under 37 CFR 1.137(b) was unintentional," satisfying the requirements of 37 CFR 1.137(b)(3).

In view of the above, the requirements of 37 CFR 1.137(b) have been satisfied. Accordingly, the request to revive the international application with respect to the United States is appropriately granted.

This application is being referred to the National Stage Processing Division of the Office of PCT Operations for further processing in accordance with this decision.

/RichardMRoss/

Richard M. Ross
Attorney Advisor
Office of PCT Legal Administration
Telephone: (571) 272-3296

UNITED STATES PATENT and TRADEMARK OFFICE

COMMISSIONER FOR PATENTS
UNITED STATES PATENT AND TRADEMARK OFFICE
P.O BOX 1450
ALEXANDRIA, VA 22313-1450
www.uspto.gov

Sterne, Kessler, Goldstein & Fox P.L.L.C.
1100 New York Avenue, N.W
Washington, DC 20005-3934

MAILED
AUG 30 2011
PCT LEGAL ADMINISTRATION

In re Application of	:	DECISION ON
WOODS et al	:	
Application No.: 13/148,289	:	
PCT No.: PCT/US2009/067582	:	
Filing Date: 10 December 2009	:	PETITION UNDER
Priority Date: 10 December 2008	:	
Attorney's Docket No.: 2615.002PC02/KWM/OAL	:	
For: Glycan-Specific Analytical Tools	:	37 CFR 1.137(b)

This decision is in response to applicants' "Petition For Revival Of An International Application For Patent Designating the U.S. Abandoned Unintentionally Under 37 CFR 1.137(b)," filed 5 August 2011.

BACKGROUND

On 10 December 2009, this international application was filed, claiming an earliest priority date of 10 December 2008.

The deadline for paying the basic national fee in the United States under 35 U.S.C. 371 and 37 CFR 1.495 was 10 June 2011. This international application became abandoned with respect to the United States at midnight on 10 June 2011 for failure to pay the required basic national fee.

On 5 August 2011, applicant filed in the United States Patent and Trademark Office (PTO) a transmittal letter for entry into the national stage in the U.S. under 35 U.S.C. 371, which was accompanied by, *inter alia*, the national basic fee, petition fee, and a petition under 37 CFR 1.137(b).

DISCUSSION

A grantable petition to revive an abandoned application under 37 CFR 1.137(b) must be accompanied by (1) the required reply, unless previously filed. In a nonprovisional application abandoned for failure to prosecute, the required reply may be met by the filing of a continuing application; (2) the petition fee as set forth in § 1.17(m); and (3) a statement that the entire delay in filing the required reply from the due date for the reply until the filing of a grantable petition pursuant to this paragraph was unintentional. The Commissioner may require additional information where there is a question whether the delay was unintentional; and (4) any terminal disclaimer (and fee as set forth in § 1.20 (d)) required pursuant to paragraph (c) of this section.

Petitioner has provided: (1) the proper reply by submitting the basic national filing fee, (2) the petition fee set forth in §1.17(m) and (3) the proper statement under 137(b)(3). In this application, no terminal disclaimer is required.

Accordingly, the petition is deemed to satisfy requirements (1), (2), (3), and (4) under 37 CFR 1.137(b).

DECISION

The petition under 37 CFR 1.137(b) is **GRANTED**.

This application is being returned to the United States Designated/Elected Office (DO/EO/US) for continued processing.

Rafael Bacares
PCT Legal Examiner
PCT Legal Office
Telephone: (571) 272-3276
Facsimile: (571) 273-0459

Jacquelyn Prather

UNITED STATES PATENT AND TRADEMARK OFFICE

Commissioner for Patents
United States Patent and Trademark Office
P.O. Box 1450
Alexandria, VA 22313-1450
www.uspto.gov

POTOMAC PATENT GROUP PLLC
P. O. BOX 270
FREDERICKSBURG, VA 22404

MAILED
OCT 12 2011
PCT LEGAL ADMINISTRATION

In re Application of ARVIDSSON et al	:	
U.S. Application No.: 13/148,308	:	
PCT Application No.: PCT/IB2009/005084	:	DECISION
Int. Filing Date: 04 February 2009	:	
Priority Date Claimed: none	:	
Attorney Docket No.: 0110-330	:	
For: HYBRID PROGRAM BALANCING	:	

This is in response to applicant's "Petition for Revival of an International Application for Patent Designating the U.S. Abandoned Unintentionally Under 37 CFR 1.137(b)" filed 06 August 2011.

BACKGROUND

On 04 February 2009, applicant filed international application PCT/IB2009/005084. A copy of the international application was communicated to the USPTO from the International Bureau on 12 August 2010. The thirty-month period for paying the basic national fee in the United States expired on 04 August 2011.

On 05 August 2011, international application PCT/IB2009/005084 became abandoned as to the United States for failure to timely pay the basic national fee.

On 06 August 2011, applicant filed the present petition under 37 CFR 1.137(b).

DISCUSSION

Under 37 CFR 1.137(b), a petition requesting that an application be revived on the grounds of unintentional abandonment must be accompanied by: (1) the required reply unless previously filed, (2) the petition fee as set forth in 37 CFR 1.17(m), (3) a statement that the entire delay in filing the required reply from the due date for the reply until the filing of a grantable petition was unintentional, and (4) a terminal disclaimer if the application was filed before 08 June 1995.

With regard to item (1), applicant has provided the required reply under 35 U.S.C. 371.

With regard to item (2), applicant has provided the required petition fee.

With regard to item (3), applicant has provided the required statement.

With regard to item (4), because the international application was filed after 08 June 1995, no terminal disclaimer is required.

CONCLUSION

For the reasons above, the petition under 37 CFR 1.137(b) is GRANTED.

The application has an International Filing Date under 35 U.S.C. 363 of 04 February 2009, and a date under 35 U.S.C. 371(c)(1), (c)(2), and (c)(4) of 05 August 2011.

This application is being forwarded to the United States Designated/Elected Office (DO/EO/US) for further processing in accordance with this decision.

Bryan Lin
PCT Legal Examiner
PCT Legal Office

Telephone: 571-272-3303
Facsimile: 571-273-0459

PTO/SB/20PCT-EP (05-10)
Approved for use through 01/31/2012. OMB 0651-0058
U.S. Patent and Trademark Office; U. S. DEPARTMENT OF COMMERCE
Under the Paperwork Reduction Act of 1995, no persons are required to respond to a collection of information unless it displays a valid OMB control number.

REQUEST FOR PARTICIPATION IN THE PATENT COOPERATION TREATY - PATENT PROSECUTION HIGHWAY (PCT-PPH) PILOT PROGRAM BETWEEN THE EUROPEAN PATENT OFFICE (EPO) AND THE USPTO

Application No:		Filing date:	August 9, 2011
First Named Inventor:	Hervé Pamingle		
Title of the Invention:	ALCOHOL AS SANDALWOOD ODORANT		

THIS REQUEST FOR PARTICIPATION IN THE PCT-PPH PILOT PROGRAM ALONG WITH THE REQUIRED DOCUMENTS MUST BE SUBMITTED VIA EFS-WEB. INFORMATION REGARDING EFS-WEB IS AVAILABLE AT HTTP://WWW.USPTO.GOV/EBC/EFS_HELP.HTML

APPLICANT HEREBY REQUESTS PARTICIPATION IN THE PCT-PPH PROGRAM AND PETITIONS TO MAKE THE ABOVE-IDENTIFIED APPLICATION SPECIAL UNDER THE PCT-PPH PROGRAM.

The above-identified application is (1) a national stage entry of the corresponding PCT application, or (2) a national stage entry of another PCT application which claims priority to the corresponding PCT application, or (3) a national application that claims domestic/ foreign priority to the corresponding PCT application, or (4) a national application which forms the basis for the priority claim in the corresponding PCT application, or (5) a continuing application of a U.S. application that satisfies one of (1) to (4) above, or (6) a U.S. application that claims domestic benefit to a U.S. provisional application which forms the basis for the priority claim in the corresponding PCT application.

The corresponding PCT application number(s) is/are: PCT/IB2010/051199

The international filing date of the corresponding PCT application(s) is/are: March 19, 2010

I. List of Required Documents:

a. **A copy of the latest international work product (WO/ISA, WO/IPEA, or IPER) in the above–identified corresponding PCT application(s)**

[x] Is attached

[ ] Is not attached because the document is already in the U.S. application.

b. **A copy of all claims which were indicated as having novelty, inventive step and industrial applicability in the above-identified corresponding PCT application(s).**

[x] Is attached.

[ ] Is not attached because the document is already in the U.S. application.

c. **English translations of the documents in a. and b. above are attached (if the documents are not in the English language). A statement that the English translation is accurate is attached for the document in b. above.**

This collection of information is required by 35 U.S.C. 119, 37 CFR 1.55, and 37 CFR 1.102(d). The information is required to obtain or retain a benefit by the public, which is to file (and by the USPTO to process) an application. Confidentiality is governed by 35 U.S.C. 122 and 37 CFR 1.11 and 1.14. This collection is estimated to take 2 hours to complete, including gathering, preparing, and submitting the completed application form to the USPTO. Time will vary depending upon the individual case. Any comments on the amount of time you require to complete this form and/or suggestions for reducing this burden should be sent to the Chief Information Officer, U.S. Patent and Trademark Office, U.S. Department of Commerce, P.O. Box 1450, Alexandria, VA 22313-1450. DO NOT SEND FEES OR COMPLETED FORMS TO THIS ADDRESS.

Approved for use through 01/31/2012. OMB 0651-0058
U.S.Patent and Trademark Office; U.S. DEPARTMENT OF COMMERCE
Under the Paperwork Reduction Act of 1995, no persons are required to respond to a collection of information unless it displays a valid OMB control number.

REQUEST FOR PARTICIPATION IN THE PCT-PPH PILOT PROGRAM BETWEEN THE EPO AND THE USPTO

(continued)

Application No.:	
First Named Inventor:	Hervé Pamingle

d. **(1) An information disclosure statement listing the documents cited in the international work products (ISR, WO/ISA, WO/IPEA, IPER) of the corresponding PCT application.**

- [x] Is attached
- [ ] Has already been filed in the above-identified U.S. application on _____

(2) Copies of all documents (except) for U.S. patents or U.S. patent application publications)

- [x] Are attached.
- [ ] Have already been filed in the above-identified U.S. application on _____

II. Claims Correspondence Table:

Claims in US Application	Patentable Claims in the corresponding PCT Application	Explanation regarding the correspondence
11-20	1-10	direct correlation - only differences are:
		multiple claim dependencies removed in claims 6 and 7 and
		the term "characterized in that" is changed to "wherein"

III. All the claims in the US application sufficiently correspond to the patentable claims in the corresponding PCT application.

Signature	Allan A. Fanucci	Date	August 9, 2011
Name (Print/Typed)	Allan A. Fanucci	Registration Number	30,256

PATENT COOPERATION TREATY

PCT

INTERNATIONAL SEARCH REPORT

(PCT Article 18 and Rules 43 and 44)

Applicant's or agent's file reference 7570-PCT	**FOR FURTHER ACTION**	see Form PCT/ISA/220 as well as, where applicable, item 5 below.
International application No. PCT/IB2010/051199	International filing date *(day/month/year)* 19/03/2010	(Earliest) Priority Date *(day/month/year)* 24/03/2009
Applicant FIRMENICH SA		

This international search report has been prepared by this International Searching Authority and is transmitted to the applicant according to Article 18. A copy is being transmitted to the International Bureau.

This international search report consists of a total of 3 sheets.

[X] It is also accompanied by a copy of each prior art document cited in this report.

1. **Basis of the report**
   a. With regard to the **language**, the international search was carried out on the basis of:
      [X] the international application in the language in which it was filed
      [ ] a translation of the international application into _____, which is the language of a translation furnished for the purposes of international search (Rules 12.3(a) and 23.1(b))
   b. [ ] This international search report has been established taking into account the **rectification of an obvious mistake** authorized by or notified to this Authority under Rule 91 (Rule 43.6*bis*(a)).
   c. [ ] With regard to any **nucleotide and/or amino acid sequence** disclosed in the international application, see Box No. I.

2. [ ] **Certain claims were found unsearchable** (See Box No. II)

3. [ ] **Unity of invention is lacking** (see Box No III)

4. With regard to the **title,**
   [X] the text is approved as submitted by the applicant
   [ ] the text has been established by this Authority to read as follows:

5. With regard to the **abstract,**
   [X] the text is approved as submitted by the applicant
   [ ] the text has been established, according to Rule 38.2(b), by this Authority as it appears in Box No. IV. The applicant may, within one month from the date of mailing of this international search report, submit comments to this Authority

6. With regard to the **drawings,**
   a. the figure of the **drawings** to be published with the abstract is Figure No. _____
      [ ] as suggested by the applicant
      [ ] as selected by this Authority, because the applicant failed to suggest a figure
      [ ] as selected by this Authority, because this figure better characterizes the invention
   b. [ ] none of the figures is to be published with the abstract

INTERNATIONAL SEARCH REPORT

International application No
PCT/IB2010/051199

A. CLASSIFICATION OF SUBJECT MATTER
INV. C07C33/12 C07C69/608 C11B9/00
ADD.

According to International Patent Classification (IPC) or to both national classification and IPC

B. FIELDS SEARCHED

Minimum documentation searched (classification system followed by classification symbols)
C07C C11B

Documentation searched other than minimum documentation to the extent that such documents are included in the fields searched

Electronic data base consulted during the international search (name of data base and, where practical, search terms used)
EPO-Internal, WPI Data, CHEM ABS Data, BEILSTEIN Data

C. DOCUMENTS CONSIDERED TO BE RELEVANT

Category*	Citation of document, with indication, where appropriate, of the relevant passages	Relevant to claim No.
A	US 6 235 943 B1 (BAJGROWICZ JERZY A [CH] ET AL) 22 May 2001 (2001-05-22) column 3 - column 4; compounds Ia,Ib,Ic,Id,Ie,IIa, IIb,IIc column 6, line 6 - line 25 ------	1-10
A	US 5 696 075 A (CHAPUIS CHRISTIAN [CH] ET AL) 9 December 1997 (1997-12-09) cited in the application column 7, line 12 - column 8, line 5 column 7, line 3 - line 58 ------	1-10

☐ Further documents are listed in the continuation of Box C. ☒ See patent family annex.

* Special categories of cited documents :

"A" document defining the general state of the art which is not considered to be of particular relevance
"E" earlier document but published on or after the international filing date
"L" document which may throw doubts on priority claim(s) or which is cited to establish the publication date of another citation or other special reason (as specified)
"O" document referring to an oral disclosure, use, exhibition or other means
"P" document published prior to the international filing date but later than the priority date claimed

"T" later document published after the international filing date or priority date and not in conflict with the application but cited to understand the principle or theory underlying the invention
"X" document of particular relevance; the claimed invention cannot be considered novel or cannot be considered to involve an inventive step when the document is taken alone
"Y" document of particular relevance; the claimed invention cannot be considered to involve an inventive step when the document is combined with one or more other such documents, such combination being obvious to a person skilled in the art.
"&" document member of the same patent family

Date of the actual completion of the international search	Date of mailing of the international search report
11 May 2010	20/05/2010

Name and mailing address of the ISA/	Authorized officer
European Patent Office, P.B. 5818 Patentlaan 2 NL - 2280 HV Rijswijk Tel. (+31-70) 340-2040, Fax: (+31-70) 340-3016	van Bergen, Marc

1

INTERNATIONAL SEARCH REPORT

Information on patent family members

International application No
PCT/IB2010/051199

Patent document cited in search report	Publication date	Patent family member(s)	Publication date
US 6235943 B1	22-05-2001	US 6284929 B1	04-09-2001
		US 6239314 B1	29-05-2001
US 5696075 A	09-12-1997	DE 69512579 D1	11-11-1999
		DE 69512579 T2	13-07-2000
		EP 0694520 A1	31-01-1996
		ES 2138688 T3	16-01-2000
		JP 3093610 B2	03-10-2000
		JP 8067661 A	12-03-1996

PATENT COOPERATION TREATY

From the
INTERNATIONAL SEARCHING AUTHORITY

To:

see form PCT/ISA/220

PCT

WRITTEN OPINION OF THE INTERNATIONAL SEARCHING AUTHORITY

(PCT Rule 43*bis*.1)

Date of mailing
(day/month/year) see form PCT/ISA/210 (second sheet)

Applicant's or agent's file reference
see form PCT/ISA/220

FOR FURTHER ACTION
See paragraph 2 below

International application No.	International filing date *(day/month/year)*	Priority date *(day/month/year)*
PCT/IB2010/051199	19.03.2010	24.03.2009

International Patent Classification (IPC) or both national classification and IPC
INV. C07C33/12 C07C69/608 C11B9/00

Applicant
FIRMENICH SA

1. This opinion contains indications relating to the following items:

- ☒ Box No. I Basis of the opinion
- ☐ Box No. II Priority
- ☐ Box No. III Non-establishment of opinion with regard to novelty, inventive step and industrial applicability
- ☐ Box No. IV Lack of unity of invention
- ☒ Box No. V Reasoned statement under Rule 43*bis*.1(a)(i) with regard to novelty, inventive step and industrial applicability; citations and explanations supporting such statement
- ☐ Box No. VI Certain documents cited
- ☒ Box No. VII Certain defects in the international application
- ☐ Box No. VIII Certain observations on the international application

2. **FURTHER ACTION**

If a demand for international preliminary examination is made, this opinion will usually be considered to be a written opinion of the International Preliminary Examining Authority ("IPEA") except that this does not apply where the applicant chooses an Authority other than this one to be the IPEA and the chosen IPEA has notifed the International Bureau under Rule 66.1*bis*(b) that written opinions of this International Searching Authority will not be so considered.

If this opinion is, as provided above, considered to be a written opinion of the IPEA, the applicant is invited to submit to the IPEA a written reply together, where appropriate, with amendments, before the expiration of 3 months from the date of mailing of Form PCT/ISA/220 or before the expiration of 22 months from the priority date, whichever expires later.

For further options, see Form PCT/ISA/220.

3. For further details, see notes to Form PCT/ISA/220.

Name and mailing address of the ISA:	Date of completion of this opinion	Authorized Officer
European Patent Office P.B. 5818 Patentlaan 2 NL-2280 HV Rijswijk - Pays Bas Tel. +31 70 340 - 2040 Fax: +31 70 340 - 3016	see form PCT/ISA/210	van Bergen, Marc Telephone No. +31 70 340-3916

WRITTEN OPINION OF THE INTERNATIONAL SEARCHING AUTHORITY

International application No.
PCT/IB2010/051199

Box No. I Basis of the opinion

1. With regard to the **language**, this opinion has been established on the basis of:

   ☒ the international application in the language in which it was filed

   ☐ a translation of the international application into , which is the language of a translation furnished for the purposes of international search (Rules 12.3(a) and 23.1 (b)).

2. ☐ This opinion has been established taking into account the **rectification of an obvious mistake** authorized by or notified to this Authority under Rule 91 (Rule 43bis.1(a))

3. With regard to any **nucleotide and/or amino acid sequence** disclosed in the international application, this opinion has been established on the basis of a sequence listing filed or furnished:

   a. (means)

   ☐ on paper

   ☐ in electronic form

   b. (time)

   ☐ in the international application as filed

   ☐ together with the international application in electronic form

   ☐ subsequently to this Authority for the purposes of search

4. ☐ In addition, in the case that more than one version or copy of a sequence listing has been filed or furnished, the required statements that the information in the subsequent or additional copies is identical to that in the application as filed or does not go beyond the application as filed, as appropriate, were furnished.

5. Additional comments:

Box No. V Reasoned statement under Rule 43*bis*.1(a)(i) with regard to novelty, inventive step or industrial applicability; citations and explanations supporting such statement

1. Statement

Novelty (N)	Yes:	Claims	1-10
	No:	Claims	
Inventive step (IS)	Yes:	Claims	1-10
	No:	Claims	
Industrial applicability (IA)	Yes:	Claims	1-10
	No:	Claims	

2. Citations and explanations

   see separate sheet

Box No. VII Certain defects in the international application

The following defects in the form or contents of the international application have been noted:

see separate sheet

Re Item V

Reference is made to the following documents:

D1 US 6 235 943 B1 (BAJGROWICZ JERZY A [CH] ET AL) 22 May 2001 (2001-05-22)

D2 US 5 696 075 A (CHAPUIS CHRISTIAN [CH] ET AL) 9 December 1997 (1997-12-09) cited in the application

1. Novelty (Art. 33(2) PCT)

1.1 D1 discloses odorants the chemical structures of which are close to the compounds claimed in the present application (columns 3, 4; compounds in scheme 1 and 2; compounds Ia, Ib, Ic, Id, Ie, IIa, IIb, IIc). Compounds of formulas Ia, Ib, Ic, Ie, IIa, IIb and IIc do not fall under the scope of claim 1 because they have a cyclopropane ring or a double bond at positions where the compounds of formula (I) of claim 1 do not have a cyclopropane ring or a double bond. An ester compound of formula (III) is not disclosed in D1 either.

The subject matter of claims 1-10 is therefore novel over D1.

1.2 D2 discloses cyclopentenyl derivatives which are close to the compounds claimed in the present application (column 7, l. 12 - column 8, l. 5). These compounds do not fall under the scope of claim 1 because they have a methyl group in beta-position to the hydroxy group whereas the compounds of formula (I) of claim 1 have an ethyl group.

Said compounds are obtained by reduction of the corresponding esters (column 6, l. 10-28, scheme I). The ester has got a proton or a methyl group in alpha-position (R=H, CH_3) whereas the esters of formula (III) od claim 10 have got an ethyl group.

The subject matter of claims 1-10 is therefore novel over D2.

2. Inventive step (Art. 33(3) PCT)

2.1 D1 and D2 may both be regarded as being the closest prior art to the subject matter of claim 1. Both documents disclose cyclopentane derivatives which are useful as odorants having a sandalwood note (D1, column 6, l. 6-25; D2, column 7, l. 3 -58).

<u>D1 as closest prior art:</u>

Compounds of formulas Ia, Ib, Ic, Ie, IIa, IIb and IIc do not fall under the scope of claim 1 because they have a cyclopropane ring or a double bond at positions where the compounds of formula (I) of claim 1 do not have a cyclopropane ring or a double bond.

The technical effect of the difference is not known since there are no experimental data allowing a direct comparison. It is not known whether the organoleptic properties of the claimed compounds are advantageous over the compounds of D1. The problem to be solved may therefore be regarded as being the provision of alternative odorants having a sandalwood note.

It would not be obvious from D1 to modify the compounds therein described in such a way that one would arrive at a compound according to formula (I) of claim 1.

The subject matter of claims 1-9 is therefore inventive in view of D1. The same applies to claim 10 which is directed to the intermediate esters of formula (III).

D2 as closest prior art:

The compounds of D2 do not fall under the scope of claim 1 because they have a methyl group in beta-position to the hydroxy group whereas the compounds of formula (I) of claim 1 have an ethyl group.

The technical effect of the difference is not known since there are no experimental data allowing a direct comparison. It is not known whether the organoleptic properties of the claimed compounds are advantageous over the compounds of D2. The problem to be solved may therefore be regarded as being the provision of alternative odorants having a sandalwood note.

It would not be obvious from D2 to modify the compounds therein described in such a way that one would arrive at a compound according to formula (I) of claim 1.

The subject matter of claims 1-9 is therefore inventive in view of D2. The same applies to claim 10 which is directed to the intermediate esters of formula (III).

Re Item VII

Contrary to the requirements of Rule 5.1(a)(ii) PCT, the relevant background art disclosed in D1 is not mentioned in the description, nor is this document identified therein.

Claims

1. A compound of formula

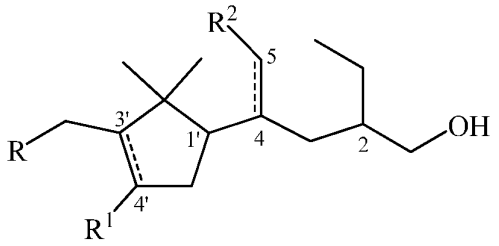

(I)

wherein R is a hydrogen atom or a methyl group;

R^2 represents a hydrogen atom and the bond between the carbon atoms 4 and 5 is a double bond, or R^2 represents a CH_2 group forming with the carbon atoms 4 and 5 a cyclopropane ring; and

R^1 represents a hydrogen atom and the bond between the carbon atoms 3' and 4' is a single or double bond, or R^1 represents a CH_2 group forming with the carbon atoms 3' and 4' a cyclopropane ring;

in the form of any one of its enantiomers or in the form of a mixture of said enantiomers.

2. A compound according to claim 1, characterized in that said compound is of formula

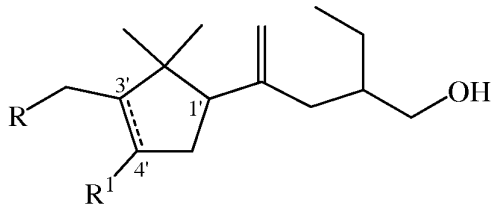

(II)

wherein R is a hydrogen atom or a methyl group; and

R^1 represents a hydrogen atom and the bond between the carbon atoms 3' and 4' is a single or double bond, or R^1 represents a CH_2 group forming with the carbon atoms 3' and 4' a cyclopropane ring.

3. A compound according to claim 1, characterized in that said compound has the carbon atom 1' with a stereo configuration of the type (R), and an enantiomeric excess of above 50 %.

4. A compound according to claim 1, characterized in that said compound is (1'R)-2-ethyl-4-(2',2',3'-trimethyl-3'-cyclopenten-1'-yl)-4-penten-1-ol, 2-ethyl-4-(2',2',3'-trimethyl-3'-cyclopenten-1'-yl)-4-penten-1-ol, (1'R)-2-ethyl-4-(3'-ethyl-2',2'-dimethyl-3'-cyclopenten-1'-yl)-4-penten-1-ol or (1'R)-2-ethyl-4-(2',2',3'-trimethyl-1'-cyclopentyl)-4-penten-1-ol.

5. Use as perfuming ingredient of a compound of formula (I), as defined in any one of claims 1 to 4.

6. A perfuming composition comprising

i) at least a compound as defined, as defined in any one of claims 1 to 4;
ii) at least one ingredient selected from the group consisting of a perfumery carrier and a perfumery base; and
iii) optionally at least one perfumery adjuvant.

7. A perfuming consumer product comprises:

i) at least one compound of formula (I), as defined in any one of claims 1 to 4; and
ii) a fine or functional perfumery base .

8. A perfumed article according to claim 7, characterized in that the fine or functional perfumery base is a perfume, a fabric care product, a body-care product, an air care product or a home care product.

9. A perfumed article according to claim 7, characterized in that the fine or functional perfumery base is a fine perfume, a cologne, an after-shave lotion, a liquid or solid detergent, a fabric softener, a fabric refresher, an ironing water, a paper, a bleach, a shampoo, a coloring preparation, a hair spray, a vanishing cream, a deodorant or antiperspirant, a perfumed soap, shower or bath mousse, oils or gel, a hygiene product, an air freshener, a "ready to use" powdered air freshener, a wipe, a dish detergent or hard-surface detergent.

10. A compound of formula

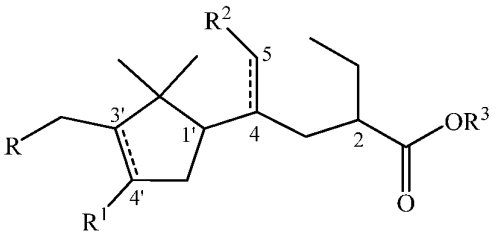

(III)

wherein R is a hydrogen atom or a methyl group;

R^2 represents a hydrogen atom and the bond between the carbon atoms 4 and 5 is a double bond, or R^2 represents a CH_2 group forming with the carbon atoms 4 and 5 a cyclopropane ring;

R^1 represents a hydrogen atom and the bond between the carbon atoms 3' and 4' is a single or double bond, or R^1 represents a CH_2 group forming with the carbon atoms 3' and 4' a cyclopropane ring; and

R^3 represents a C_{1-4} alkyl group;

in the form of any one of its enantiomers or in the form of a mixture of said enantiomers.

UNITED STATES PATENT AND TRADEMARK OFFICE

Commissioner for Patents
United States Patent and Trademark Office
P.O. Box 1450
Alexandria, VA 22313-1450
www.uspto.gov

MAILED

SEP 26 2011

PCT LEGAL ADMINISTRATION

BRINKS, HOFER, GILSON & LIONE
P.O. BOX 110285
RESEARCH TRIANGLE PARK NC 27709

In re Application of	:	
VOESTE et al.	:	
Application No.: 13/148,589	:	DECISION
PCT No.: PCT/EP2010/051526	:	
Int. Filing Date: 09 February 2010	:	
Priority Date: 11 February 2009	:	
Attorney's Docket No.: 13779-729	:	
For: PESTICIDAL MIXTURES	:	

This is a decision on applicants' submission filed 24 August 2011, which has properly been treated as a petition under 37 CFR 1.182. The petition is **GRANTED** as discussed below.

On 09 August 2011, applicants filed national stage papers in the United States Designated/Elected Office (DO/EO/US) electronically via EFS-Web. The submission included, *inter alia*, a Transmittal Letter, an Application Data Sheet (ADS), and a declaration of inventors. The international application number keyed into EFS-Web was PCT/EP09/51526. The Transmittal Letter, the ADS, and the declaration indicate the international application number as PCT/EP2010/051526.

On 24 August 2011, applicants filed the instant submission requesting that the instant application be accepted as the national stage application under 35 U.S.C. 371 of international application number PCT/EP2010/051526.

A petition under 37 CFR 1.182 is required to correct the record with regard to an incorrect international application number. The petition must include the following: (1) payment of the $400 petition fee; (2) an indication that the correct international application number was included somewhere in the national stage application papers filed prior to the expiration of thirty months from the priority date; and (3) a statement indicating the correct international application number.

As to item (1), the petition fee under 37 CFR 1.17(f) has been charged to Deposit Account 23-1925.

As to item (2), as noted above, international application number PCT/EP2010/051526 appears in the national stage application papers filed 09 August 2011.

As to item (3), petitioner identifies the correct international application number in the petition.

A review of the application file including counsel's statements in the instant submission, as well as a review of the international publication of PCT/EP2010/051526, reveals that the present application should in fact be the national stage application of international application **PCT/EP2010/051526**.

This application is being forwarded to the National Stage Processing Branch of the Office of PCT Operations to continue national stage processing of the application.

/Daniel Stemmer/

Daniel Stemmer
Legal Examiner
PCT Legal Affairs
Office of Patent Cooperation Treaty
Legal Administration
Telephone: (571) 272-3301

UNITED STATES PATENT AND TRADEMARK OFFICE

UNITED STATES DEPARTMENT OF COMMERCE
United States Patent and Trademark Office
Address: COMMISSIONER FOR PATENTS
P.O. Box 1450
Alexandria, Virginia 22313-1450
www.uspto.gov

APPLICATION NO.	FILING DATE	FIRST NAMED INVENTOR	ATTORNEY DOCKET NO.	CONFIRMATION NO.
13/148,591	09/27/2011	Matthew Marshall	150381	3154

25944 7590 11/22/2011
OLIFF & BERRIDGE, PLC
P.O. BOX 320850
ALEXANDRIA, VA 22320-4850

EXAMINER

ART UNIT	PAPER NUMBER
3726	

NOTIFICATION DATE	DELIVERY MODE
11/22/2011	ELECTRONIC

Please find below and/or attached an Office communication concerning this application or proceeding.

The time period for reply, if any, is set in the attached communication.

Notice of the Office communication was sent electronically on above-indicated "Notification Date" to the following e-mail address(es):

OfficeAction25944@oliff.com
jarmstrong@oliff.com

UNITED STATES PATENT AND TRADEMARK OFFICE

Commissioner for Patents
United States Patent and Trademark Office
P.O. Box 1450
Alexandria, VA 22313-1450
www.uspto.gov

OLIFF & BERRIDGE, PLC
P.O. BOX 320850
ALEXANDRIA VA 22320-4850

In re Application of: MARSHALL, MATTHEW Serial No.: 13/148,~~951~~ 591 Filed: Aug. 9, 2011 Attorney Docket No. : 150381 Title: FIXTURE FOR SECURING A THIN-WALLED COMPONENT	DECISION ON A REQUEST TO PARTICIPATE IN PATENT PCT/PROSECUTION HIGHWAY PROGRAM AND PETITION TO MAKE SPECIAL UNDER CFR 1.102(a)

This is a decision on the request to participate in the Patent Prosecution Highway (PPH) program and the petition under 37 CFR 1.102(a), filed Sep. 27, 2011 to make the above-identified application special.

The request and petition are **granted**.

A grantable request to participate in the PPH pilot program and petition to make special require:

(1) The U.S. application must validly claim priority under 35 U.S.C. 119(a) to one or more PCT applications filed in the JPO, EPO, KIPO, or USPTO;
(2) Applicant must submit a copy of the allowable/patentable claim(s) from the PCT application(s) latest international work product (the written opinion or the IPER) along with an English translation thereof and a statement that the English translation is accurate;
(3) All the claims in the U.S. application must sufficiently correspond or be amended to sufficiently correspond to the allowable/patentable claim(s) in the PCT application(s);
(4) Examination of the U.S. application has not begun;
(5) Applicant must submit a copy of the latest international work product from the PCT application containing the allowable/patentable claim(s) along with an English translation thereof and a statement that the English translation is accurate; and
(6) Applicant must submit an IDS listing the documents cited by the PCT examiner in the international work product along with copies of documents except U.S. patents or U.S. patent application publications.

In light of the petition being properly submitted, the request to participate in the PPH program and the petition comply with the above requirements. Accordingly, the above-identified application has been accorded "special" status.

The applicant is encouraged to cite and submit all relevant prior art references, if any, to facilitate examination in this application.

Response must be filed via EFS-Web. Telephone inquiries concerning this decision should be directed to Henry C. Yuen, at 571-272-4856.

Petition is **granted**.

/Henry C. Yuen/

Henry C. Yuen
Special Programs Examiner
Technology Center 3700
Tel: 571-272-4856

MAILED

JAN 03 2012

PCT LEGAL ADMINISTRATION

UNITED STATES PATENT AND TRADEMARK OFFICE

Commissioner for Patents
United States Patent and Trademark Office
P.O. Box 1450
Alexandria, VA 22313-1450
www.uspto.gov

RENNER OTTO BOISSELLE & SKLAR, LLP
1621 EUCLID AVENUE
NINETEENTH FLOOR
CLEVELAND OH 44115

In re Application of: MESNER, Steven U.S. Application No.: 13/148,603 PCT No.: PCT/US2010/023534 International Filing Date: 09 February 2010 Priority Date: 09 February 2009 Attorney's Docket No.: P205P0009WOUSA For: COMBINATION SOLENOID CHECK VALVE	DECISION ON PETITION UNDER 37 CFR 1.181

This decision is issued in response to the "Petition Under 37 C.F.R. § 1.181 To The Director" filed on 19 October 2011. No petition fee is required.

BACKGROUND

On 09 February 2010, applicant filed international application PCT/US2010/023534. The international application claimed a priority date of 09 February 2009, and it designated the United States. The deadline for submission of the basic national fee was thirty months from the priority date, i.e., 09 August 2011.

On 09 August 2011, above-named counsel filed via the EFS-Web electronic filing system a submission requesting entry into the national stage in the United States for international application PCT/US2010/023534. The submission, which included the authorization to charge Deposit Account No. 18-0988 for required fees, was assigned U.S. application number 13/148,603. Pursuant to the authorization contained in the submission, Deposit Account No. 18-0988 was charged the required fees, including the basic national fee.

Also on 09 August 2011, above-named counsel filed via the EFS-Web electronic filing system a second submission requesting entry into the national stage in the United States for international application PCT/US2010/023534. This submission, which included a credit card payment of the required fees, including the basic national fee, was assigned U.S. application number 13/148,608.

On 13 September 2011, the United States Designated/Elected Office (DO/EO/US) issued a "Notification Of Acceptance" (Form PCT/DO/EO/903) in U.S. application number 13/148,603 indicating that the requirements of 35 U.S.C. 371(c) were satisfied as of 09 August 2011.

On 16 September 2011, the United States Designated/Elected Office (DO/EO/US) issued a "Notification Of Acceptance" (Form PCT/DO/EO/903) in U.S. application number 13/148,608 indicating that the requirements of 35 U.S.C. 371(c) were satisfied as of 09 August 2011.

On 19 October 2011, applicant filed (in application number 13/148,603) the petition under 37 CFR 1.181 considered herein.

On 22 December 2011, U.S. application number 13/148,603 was published.

DISCUSSION

As is evident from the above-recited facts, above-named counsel has submitted two sets of papers to enter the national stage under 35 U.S.C. 371 for PCT/US2010/023534 (U.S. application numbers 13/148,603 and 13/148,608). Applicant's petition asserts that that there was no intent to file two separate national stage applications and therefore requests that one of the duplicative applications be withdrawn and that the duplicative fees paid therein be refunded.

The end result for an international application designating the United States is a single U.S. national stage application (see, 35 U.S.C. 363). Therefore, the submission of two sets of national stage papers for international application PCT/US2010/023534 was improper.

The submission assigned U.S. application number 13/148,603 was the first of the two national stage applications filed, it included all the requirements for national stage entry (including payment of the basic national fee), and it has been published by the USPTO. Accordingly, U.S. application number 13/148,603 is the application file that will continue to be processed as the U.S. national stage of PCT/US2010/023534.

The duplicative application materials assigned U.S. application number 13/148,608 will be placed in application file 13/148,603, and U.S. application number 13/148,608 will be discontinued. The "Notification of Acceptance" and filing receipt mailed on 16 September 2011 in discontinued U.S. application number 13/148,608 are appropriately vacated.

Finally, the duplicative fees paid in U.S. application number 13/148,608 will be refunded to applicant.

CONCLUSION

Applicant's petition under 37 CFR 1.181 is **GRANTED** to the following extent:

The duplicative fees paid by applicant in U.S. application number 13/148,608 will be refunded to applicant.

The duplicative application materials filed 09 August 2011 and assigned U.S. application number 13/148,608 will be placed in application file 13/148,603, and U.S. application number 13/148,608 will be discontinued.

U.S. application number 13/148,603 will continue as the U.S. national stage of PCT/US2010/023534.

All further correspondence with respect to this national stage application should be directed to U.S. application number **13/148,603**.

/RichardMRoss/

Richard M. Ross
Attorney Advisor
Office of PCT Legal Administration
Telephone: (571) 272-3296

PTO/SB/20PCT-EP (05-10)
Approved for use through 01/31/2012. OMB 0651-0058
U.S. Patent and Trademark Office; U. S. DEPARTMENT OF COMMERCE
Under the Paperwork Reduction Act of 1995, no persons are required to respond to a collection of information unless it displays a valid OMB control number.

REQUEST FOR PARTICIPATION IN THE PATENT COOPERATION TREATY - PATENT PROSECUTION HIGHWAY (PCT-PPH) PILOT PROGRAM BETWEEN THE EUROPEAN PATENT OFFICE (EPO) AND THE USPTO

Application No:	13/148,655	Filing date:	08/09/2011
First Named Inventor:	van Dijck et al.		
Title of the Invention:	USE OF TREHALOSE TO OBTAIN DROUGHT RESISTANT PLANTS		

THIS REQUEST FOR PARTICIPATION IN THE PCT-PPH PILOT PROGRAM ALONG WITH THE REQUIRED DOCUMENTS MUST BE SUBMITTED VIA EFS-WEB. INFORMATION REGARDING EFS-WEB IS AVAILABLE AT HTTP://WWW.USPTO.GOV/EBC/EFS_HELP.HTML

APPLICANT HEREBY REQUESTS PARTICIPATION IN THE PCT-PPH PROGRAM AND PETITIONS TO MAKE THE ABOVE-IDENTIFIED APPLICATION SPECIAL UNDER THE PCT-PPH PROGRAM.

The above-identified application is (1) a national stage entry of the corresponding PCT application, or (2) a national stage entry of another PCT application which claims priority to the corresponding PCT application, or (3) a national application that claims domestic/ foreign priority to the corresponding PCT application, or (4) a national application which forms the basis for the priority claim in the corresponding PCT application, or (5) a continuing application of a U.S. application that satisfies one of (1) to (4) above, or (6) a U.S. application that claims domestic benefit to a U.S. provisional application which forms the basis for the priority claim in the corresponding PCT application.

The corresponding PCT application number(s) is/are: PCT/EP2010/051500

The international filing date of the corresponding PCT application(s) is/are: February 8, 2010

I. List of Required Documents:

a. **A copy of the latest international work product (WO/ISA, WO/IPEA, or IPER) in the above–identified corresponding PCT application(s)**

[x] Is attached

[ ] Is not attached because the document is already in the U.S. application.

b. **A copy of all claims which were indicated as having novelty, inventive step and industrial applicability in the above-identified corresponding PCT application(s).**

[x] Is attached.

[ ] Is not attached because the document is already in the U.S. application.

c. **English translations of the documents in a. and b. above are attached (if the documents are not in the English language). A statement that the English translation is accurate is attached for the document in b. above.**

This collection of information is required by 35 U.S.C. 119, 37 CFR 1.55, and 37 CFR 1.102(d). The information is required to obtain or retain a benefit by the public, which is to file (and by the USPTO to process) an application. Confidentiality is governed by 35 U.S.C. 122 and 37 CFR 1.11 and 1.14. This collection is estimated to take 2 hours to complete, including gathering, preparing, and submitting the completed application form to the USPTO. Time will vary depending upon the individual case. Any comments on the amount of time you require to complete this form and/or suggestions for reducing this burden should be sent to the Chief Information Officer, U.S. Patent and Trademark Office, U.S. Department of Commerce, P.O. Box 1450, Alexandria, VA 22313-1450. DO NOT SEND FEES OR COMPLETED FORMS TO THIS ADDRESS.

Approved for use through 01/31/2012. OMB 0651-0058
U.S.Patent and Trademark Office; U.S. DEPARTMENT OF COMMERCE

Under the Paperwork Reduction Act of 1995, no persons are required to respond to a collection of information unless it displays a valid OMB control number.

REQUEST FOR PARTICIPATION IN THE PCT-PPH PILOT PROGRAM BETWEEN THE EPO AND THE USPTO

(continued)

Application No.:	13/148,655
First Named Inventor:	van Dijck et al.

d. **(1) An information disclosure statement listing the documents cited in the international work products (ISR, WO/ISA, WO/IPEA, IPER) of the corresponding PCT application.**

☐ Is attached

☒ Has already been filed in the above-identified U.S. application on August 9, 2011

(2) Copies of all documents (except) for U.S. patents or U.S. patent application publications)

☐ Are attached.

☒ Have already been filed in the above-identified U.S. application on August 9, 2011

II. Claims Correspondence Table:

Claims in US Application	Patentable Claims in the corresponding PCT Application	Explanation regarding the correspondence
1	none	Canceled
2	2	Amended to conform to Office practice.
3	3	Amended to conform to Office practice.
4	4	Amended to conform to Office practice.
5	5	Amended to conform to Office practice.
6	6	Amended to conform to Office practice.
7	7	Amended to conform to Office practice.
8	8	Amended to conform to Office practice.
9	5	Formerly part of (now amended) claim 5 as it depended from claim 4.

III. All the claims in the US application sufficiently correspond to the patentable claims in the corresponding PCT application.

Signature	Date 09/12/2011
Name (Print/Typed) Allen C. Turner	Registration Number 33,041

UNITED STATES PATENT AND TRADEMARK OFFICE

Commissioner for Patents
United States Patent and Trademark Office
P.O. Box 1450
Alexandria, VA 22313-1450
www.uspto.gov

MAILED
FEB 15 2012
OFFICE OF PETITIONS

TRASKBRITT, P.C.
P.O. BOX 2550
SALT LAKE CITY, UT 84110

In re Application of
Patrick VAN DIJCK et al
Application No.: 13/148,655
Filed: September 12, 2011
Attorney Docket No.: 2676-9376.1US
For: USE OF TREHALASE TO OBTAIN DROUGHT RESISTANCE IN PLANTS

: DECISION ON REQUEST TO
: PARTICIPATE IN THE PATENT
: PROSECUTION HIGHWAY
: PROGRAM AND PETITION
: TO MAKE SPECIAL UNDER
: 37 CFR 1.102(a)

This is a decision on the request to participate in the PCT Patent Prosecution Highway (PCT-PPH) pilot program and the petition under 37 CFR 1.102(a), filed on September 12, 2011 to make the above-identified application special.

The request and petition are **GRANTED**.

Discussion

A grantable request to participate in the PCT-PPH pilot program and petition to make special require:

(1) The U.S. application must have an eligible relationship to one or more PCT applications where the ISA or IPEA are the JPO, EPO, KIPO, NPI, NBPR, Austria, Australia, Finland, Spain, Sweden, China or USPTO;

(2) At least one claim in the PCT application has novelty, inventive step, and industrial applicability and must be free of any observations in Box VIII in the latest work product in the international stage or applicant must identify and explain why the claim(s) is/are not subject to the observation in Box VIII;

(3) Applicant must submit a copy of the claim(s) from the PCT application(s) that have novelty, inventive step, and industrial applicability along with an English translation thereof and a statement that the English translation is accurate, if the claims are not in the English language;

(4) All the claims in the U.S. application must sufficiently correspond or be amended to sufficiently correspond to the claim(s) that have novelty, inventive step, and industrial applicability in the PCT application(s);

(5) Examination of the U.S. application has not begun;

(6) Applicant must submit a copy of the latest international work product from the PCT application indicating that the claim(s) have novelty, inventive step, and industrial applicability along with an English translation thereof and a statement that the English translation is accurate if the latest international work product is not in the English language;

(7) Applicant must submit an IDS listing the documents cited by the PCT examiner in the international work product along with copies of documents except U.S. patents or U.S. patent application publications.

The request to participate in the PCT-PPH pilot program and petition comply with the above requirements. Accordingly, the above-identified application has been accorded "special" status.

Telephone inquiries concerning this decision should be directed to the undersigned at (571) 272-0602.

All other inquiries concerning the examination or status of the application is accessible in the PAIR system at http://www.uspto.gov/ebc.index.html.

This application will be referred to the Technology Center for action on the merits commensurate with this decision, upon completion of pre-examination processing.

Thurman K. Page
Petitions Examiner
Office of Petitions

UNITED STATES PATENT AND TRADEMARK OFFICE

Commissioner for Patents
United States Patent and Trademark Office
P.O. Box 1450
Alexandria, VA 22313-1450
www.uspto.gov

MCDONNELL BOEHNEN HULBERT & BERGHOFF LLP
300 S. WACKER DRIVE
32ND FLOOR
CHICAGO IL 60606

MAILED
OCT 12 2011
PCT LEGAL ADMINISTRATION

In re Application of :
CAIN, Katharine Lacy, et al. :
Application No.: 13/148,740 :
PCT No.: PCT/GB2010/000234 : DECISION
Int. Filing Date: 10 February 2010 :
Priority Date: 10 February 2009 :
Att. Docket No.: 11-1059-WO-US :
For: METHOD FOR PRODUCING PROTEIN :

Applicant's petition under 37 CFR 1.137(b), filed in the United States Patent and Trademark Office on 11 August 2011, is **GRANTED**.

Applicant states that the entire delay in filing the required reply from the due date for the required reply until the filing of a grantable petition under 37 CFR 1.137(b) was unintentional, as required by 37 CFR 1.137(b)(3). The appropriate national fee and petition fee have been submitted. A terminal disclaimer is not required as the application was filed on or after 08 June 1995. Accordingly, all requirements under 37 CFR 1.137(b) have been satisfied.

The surcharge for filing the search fee, examination fee or oath or declaration after thirty months will be charged to deposit account no. 13-2490, as authorized.

This application is being referred to the National Stage Processing Branch of the Office of Patent Application Processing for continued processing in accordance with this decision.

/Erin P. Thomson/

Erin P. Thomson
Attorney Advisor
PCT Legal Administration

Telephone: 571-272-3292

UNITED STATES PATENT AND TRADEMARK OFFICE

Commissioner for Patents
United States Patent and Trademark Office
P.O. Box 1450
Alexandria, VA 22313-1450
www.uspto.gov

THOMPSON HINE L.L.P.
Intellectual Property Group
P.O. BOX 8801
DAYTON OH 45401-8801

MAILED
SEP 28 2011
PCT LEGAL ADMINISTRATION

In re Application of: SMITH et al.	:	
U.S. Application No: 13 /148,780	:	
PCT Application No.: PCT/US2010/023613	:	
International Filing Date: 09 February 2010	:	DECISION ON PETITION
Priority Date: 10 February 2009	:	UNDER
Attorney's Docket No.: 07115700012P	:	37 CFR 1.137(b)
For: METHOD FOR CIRCULATION	:	
CONTROLLED VERTICAL AXIS	:	
WIND TURBINES	:	

This decision is in response to applicant's "Petition for Revival of an International Application for Patent Designating the U.S. Abandoned Unintentionally under 37 CFR 1.137(b)" filed 13 September 2011.

BACKGROUND

On 09 February 2010, applicant filed international application PCT/US2010/023613, which claimed priority of earlier US provisional applications filed 10 February 2009 and 12 March 2009. A copy of the international application was communicated to the USPTO from the International Bureau on 19 August 2010. The thirty-month period for paying the basic national fee in the United States expired on 10 August 2011.

On 10 August 2011, applicant filed a submission to enter the U.S. national phase under 35 USC 371. Applicant did not submit the basic national fee.

On 11 August 2011, international application PCT/US2010/023613 became abandoned as to the United States for failure to timely pay the basic national fee.

On 13 September 2011, applicant filed the present petition under 37 CFR 1.137(b).

DISCUSSION

Under 37 CFR 1.137(b), a petition requesting that an application be revived on the grounds of unintentional abandonment must be accompanied by: (1) the required reply unless previously filed; (2) the petition fee as set forth in § 1.17(m); (3) a statement that the entire delay in filing the required reply from the due date for the reply until the filing of a grantable petition was unintentional; and (4) a terminal disclaimer if the application was filed before 08 June 1995.

With regard to item (1), applicant has provided the required reply under 35 U.S.C. 371 by submitting the basic national fee.

With regard to item (2), applicant has provided the required petition fee.

With regard to item (3), applicant has provided the required statement.

With regard to item (4), because the international application was filed after 08 June 1995, no terminal disclaimer is required.

CONCLUSION

For the reason above, the petition under 37 CFR 1.137(b) is **GRANTED**.

The application is being forwarded to the United States Designated/Elected Office (DO/EO/US) for further processing in accordance with this decision.

Seungsook Ham
PCT Legal Administration
United States Patent and Trademark Office

Boris Milef
PCT Legal Examiner
Office of PCT Legal Administration
Telephone: (571) 272-3288

UNITED STATES PATENT AND TRADEMARK OFFICE

Commissioner for Patents
United States Patent and Trademark Office
P.O. Box 1450
Alexandria, VA 22313-1450
www.uspto.gov

Thompson Hine L.L.P.
Intellectual Property Group
P.O. Box 8801
Dayton, OH 45401-8801

MAILED
SEP 20 2011
PCT LEGAL ADMINISTRATION

In re Application of
SMITH et al.
Application No.: 13/148,802
PCT No.: PCT/US2010/023621
Int. Filing Date: 09 February 2010
Priority Date: 10 February 2009
Attorney Docket No.: 071157-00013
For: AIRFOIL FOR CIRCULATION CONTROLLED VERTICAL AXIS WIND TURBINES

DECISION ON PETITION UNDER 37 CFR 1.137(b)

The petition to revive under 37 CFR 1.137(b) filed 13 September 2011 in the above-captioned application is hereby GRANTED as follows:

Applicants' statement that "the entire delay in filing the required reply from the due date for the reply until the filing of a grantable petition under 37 CFR 1.137(b) was unintentional" meets the requirements of 37 CFR 1.137(b)(3).

A review of the application file reveals that applicants have submitted the basic national fee and the requirements of 37 CFR 1.137(b) have been satisfied. Therefore, the request to revive the application abandoned under 35 U.S.C. 371(d) is granted as to the National stage in the United States of America.

This application is being returned to the United States Designated/Elected Office for processing in accordance with this decision

Anthony Smith
Attorney-Advisor
Office of PCT Legal Administration
Telephone: (571) 272-3298
Facsimile: (571) 273-0459

UNITED STATES PATENT AND TRADEMARK OFFICE

Commissioner for Patents
United States Patent and Trademark Office
P.O. Box 1450
Alexandria, VA 22313-1450
www.uspto.gov

THOMPSON HINE L.L.P.
Intellectual Property Group
P.O. BOX 8801
DAYTON OH 45401-8801

MAILED
SEP 28 2011
PCT LEGAL ADMINISTRATION

In re Application of: SMITH et al.
U.S. Application No: 13 /148,814
PCT Application No.: PCT/US2010/023626
International Filing Date: 09 February 2010
Priority Date: 10 February 2009
Attorney's Docket No.: 071157-00014
For: CIRCULATION CONTROLLED VERTICAL AXIS WIND TURBINES

DECISION ON PETITION UNDER 37 CFR 1.137(b)

This decision is in response to applicant's "Petition for Revival of an International Application for Patent Designating the U.S. Abandoned Unintentionally under 37 CFR 1.137(b)" filed 13 September 2011.

BACKGROUND

On 09 February 2010, applicant filed international application PCT/US2010/023626, which claimed priority of earlier US provisional applications filed 10 February 2009 and 12 March 2009. A copy of the international application was communicated to the USPTO from the International Bureau on 19 August 2010. The thirty-month period for paying the basic national fee in the United States expired on 10 August 2011.

On 10 August 2011, applicant filed a submission to enter the U.S. national phase under 35 USC 371. Applicant did not submit the basic national fee.

On 11 August 2011, international application PCT/US2010/023626 became abandoned as to the United States for failure to timely pay the basic national fee.

On 13 September 2011, applicant filed the present petition under 37 CFR 1.137(b).

DISCUSSION

Under 37 CFR 1.137(b), a petition requesting that an application be revived on the grounds of unintentional abandonment must be accompanied by: (1) the required reply unless previously filed; (2) the petition fee as set forth in § 1.17(m); (3) a statement that the entire delay in filing the required reply from the due date for the reply until the filing of a grantable petition was unintentional; and (4) a terminal disclaimer if the application was filed before 08 June 1995.

With regard to item (1), applicant has provided the required reply under 35 U.S.C. 371 by submitting the basic national fee.

With regard to item (2), applicant has provided the required petition fee.

With regard to item (3), applicant has provided the required statement.

With regard to item (4), because the international application was filed after 08 June 1995, no terminal disclaimer is required.

CONCLUSION

For the reason above, the petition under 37 CFR 1.137(b) is **GRANTED**.

The application is being forwarded to the United States Designated/Elected Office (DO/EO/US) for further processing in accordance with this decision.

Seungsook Ham
PCT Legal Administration
United States Patent and Trademark Office

Boris Milef
PCT Legal Examiner
Office of PCT Legal Administration
Telephone: (571) 272-3288

PTO/SB/20PCT-JP (05-10)
Approved for use through 01/31/2012. OMB 0651-0058
U.S. Patent and Trademark Office; U. S. DEPARTMENT OF COMMERCE
Under the Paperwork Reduction Act of 1995, no persons are required to respond to a collection of information unless it displays a valid OMB control number.

REQUEST FOR PARTICIPATION IN THE PATENT COOPERATION TREATY - PATENT PROSECUTION HIGHWAY (PCT-PPH) PILOT PROGRAM BETWEEN THE JAPAN PATENT OFFICE (JPO) AND THE USPTO

Application No:	13148864	Filing date:	2011-08-10
First Named Inventor:	OMORI		
Title of the Invention:	SAMPLE OBSERVING METHOD AND SCANNING ELECTRON MICROSCOPE		

THIS REQUEST FOR PARTICIPATION IN THE PCT-PPH PILOT PROGRAM ALONG WITH THE REQUIRED DOCUMENTS MUST BE SUBMITTED VIA EFS-WEB. INFORMATION REGARDING EFS-WEB IS AVAILABLE AT HTTP://WWW.USPTO.GOV/EBC/EFS_HELP.HTML

APPLICANT HEREBY REQUESTS PARTICIPATION IN THE PCT-PPH PROGRAM AND PETITIONS TO MAKE THE ABOVE-IDENTIFIED APPLICATION SPECIAL UNDER THE PCT-PPH PROGRAM.

The above-identified application is (1) a national stage entry of the corresponding PCT application, or (2) a national stage entry of another PCT application which claims priority to the corresponding PCT application, or (3) a national application that claims domestic/ foreign priority to the corresponding PCT application, or (4) a national application which forms the basis for the priority claim in the corresponding PCT application, or (5) a continuing application of a U.S. application that satisfies one of (1) to (4) above, or (6) a U.S. application that claims domestic benefit to a U.S. provisional application which forms the basis for the priority claim in the corresponding PCT application.

The corresponding PCT application number(s) is/are: PCT/JP2010/000778

The international date of the corresponding PCT application(s) is/are: 2010-02-09

I. List of Required Documents:

a. **A copy of the latest international work product (WO/ISA, WO/IPEA, or IPER) in the above-identified corresponding PCT application(s)**

☑ Is attached.

☐ Is not attached because the document is already in the U.S. application.

b. **A copy of all claims which were indicated as having novelty, inventive step and industrial applicability in the above-identified corresponding PCT application(s).**

☑ Is attached.

☐ Is not attached because the document is already in the U.S. application.

c. **English translations of the documents in a. and b. above are attached (if the documents are not in the English language). A statement that the English translation is accurate is attached for the document in b. above.**

This collection of information is required by 35 U.S.C. 119, 37 CFR 1.55, and 37 CFR 1.102(d). The information is required to obtain or retain a benefit by the public, which is to file (and by the USPTO to process) an application. Confidentiality is governed by 35 U.S.C. 122 and 37 CFR 1.11 and 1.14. This collection is estimated to take 2 hours to complete, including gathering, preparing, and submitting the completed application form to the USPTO. Time will vary depending upon the individual case. Any comments on the amount of time you require to complete this form and/or suggestions for reducing this burden should be sent to the Chief Information Officer, U.S. Patent and Trademark Office, U.S. Department of Commerce, P.O. Box 1450, Alexandria, VA 22313-1450. DO NOT SEND FEES OR COMPLETED FORMS TO THIS ADDRESS.

Approved for use through 01/31/2012. OMB 0651-0058
U.S.Patent and Trademark Office; U.S. DEPARTMENT OF COMMERCE
Under the Paperwork Reduction Act of 1995, no persons are required to respond to a collection of information unless it displays a valid OMB control number.

REQUEST FOR PARTICIPATION IN THE PCT-PPH PILOT PROGRAM BETWEEN THE JPO AND THE USPTO

(continued)

Application No.:	13148864
First Named Inventor:	OMORI

d. **(1) An information disclosure statement listing the documents cited in the international work products (ISR, WO/ISA, WO/IPEA, IPER) of the corresponding PCT application.**

☐ Is attached

☑ Has already been filed in the above-identified U.S. application on 2011-08-10

(2) Copies of all documents (except) for U.S. patents or U.S. patent application publications)

☐ Are attached.

☑ Have already been filed in the above-identified U.S. application on 2011-08-10

II. Claims Correspondence Table:

Claims in US Application	Patentable Claims in the corresponding PCT Application	Explanation regarding the correspondence
1-11	1-11	Claims 1-11 in U.S. Application are an English translation of patentable claims 1-11, respectively, in the corresponding PCT Application.

III. All the claims in the US application sufficiently correspond to the patentable claims in the corresponding PCT application.

Signature /JOHN R. MATTINGLY/	Date 2011-08-12
Name (Print/Typed) JOHN R. MATTINGLY	Registration Number 30293

Privacy Act Statement

The **Privacy Act of 1974 (P.L. 93-579)** requires that you be given certain information in connection with your submission of the attached form related to a patent application or patent. Accordingly, pursuant to the requirements of the Act, please be advised that: (1) the general authority for the collection of this information is 35 U.S.C. 2(b)(2); (2) furnishing of the information solicited is voluntary; and (3) the principal purpose for which the information is used by the U.S. Patent and Trademark Office is to process and/or examine your submission related to a patent application or patent. If you do not furnish the requested information, the U.S. Patent and Trademark Office may not be able to process and/or examine your submission, which may result in termination of proceedings or abandonment of the application or expiration of the patent.

The information provided by you in this form will be subject to the following routine uses:

1. The information on this form will be treated confidentially to the extent allowed under the Freedom of Information Act (5 U.S.C. 552) and the Privacy Act (5 U.S.C 552a). Records from this system of records may be disclosed to the Department of Justice to determine whether disclosure of these records is required by the Freedom of Information Act.
2. A record from this system of records may be disclosed, as a routine use, in the course of presenting evidence to a court, magistrate, or administrative tribunal, including disclosures to opposing counsel in the course of settlement negotiations.
3. A record in this system of records may be disclosed, as a routine use, to a Member of Congress submitting a request involving an individual, to whom the record pertains, when the individual has requested assistance from the Member with respect to the subject matter of the record.
4. A record in this system of records may be disclosed, as a routine use, to a contractor of the Agency having need for the information in order to perform a contract. Recipients of information shall be required to comply with the requirements of the Privacy Act of 1974, as amended, pursuant to 5 U.S.C. 552a(m).
5. A record related to an International Application filed under the Patent Cooperation Treaty in this system of records may be disclosed, as a routine use, to the International Bureau of the World Intellectual Property Organization, pursuant to the Patent Cooperation Treaty.
6. A record in this system of records may be disclosed, as a routine use, to another federal agency for purposes of National Security review (35 U.S.C. 181) and for review pursuant to the Atomic Energy Act (42 U.S.C. 218(c)).
7. A record from this system of records may be disclosed, as a routine use, to the Administrator, General Services, or his/her designee, during an inspection of records conducted by GSA as part of that agency's responsibility to recommend improvements in records management practices and programs, under authority of 44 U.S.C. 2904 and 2906. Such disclosure shall be made in accordance with the GSA regulations governing inspection of records for this purpose, and any other relevant (*i.e.*, GSA or Commerce) directive. Such disclosure shall not be used to make determinations about individuals.
8. A record from this system of records may be disclosed, as a routine use, to the public after either publication of the application pursuant to 35 U.S.C. 122(b) or issuance of a patent pursuant to 35 U.S.C. 151. Further, a record may be disclosed, subject to the limitations of 37 CFR 1.14, as a routine use, to the public if the record was filed in an application which became abandoned or in which the proceedings were terminated and which application is referenced by either a published application, an application open to public inspection or an issued patent.
9. A record from this system of records may be disclosed, as a routine use, to a Federal, State, or local law enforcement agency, if the USPTO becomes aware of a violation or potential violation of law or regulation.

Attorney Docket No. POL-7883

IN THE UNITED STATES PATENT AND TRADEMARK OFFICE

Serial No. : 13/148,864

Applicant(s) : S. OMORI et al.

Customer No.: 24956

ENCLOSED PPH DOCUMENTS:

COPY OF LATEST INTERNATIONAL WORK PRODUCT (WRITTEN OPINION OF THE INTERNATIONAL SEARCHING AUTHORITY) IN PCT APPLICATION NO. PCT/JP2010/000778, AND ENGLISH TRANSLATION THEREOF.

国際調査機関の見解書

国際出願番号 ＰＣＴ／ＪＰ２０１０／０００７７８

第Ｖ欄　新規性、進歩性又は産業上の利用可能性についてのＰＣＴ規則43の2.1(a)(i)に定める見解、それを裏付ける文献及び説明

１．　見解

新規性（N）	請求項	1-11	有
	請求項		無
進歩性（ＩＳ）	請求項	1-11	有
	請求項		無
産業上の利用可能性（ＩＡ）	請求項	1-11	有
	請求項		無

２．　文献及び説明

文献１：JP 2005-116795 A（株式会社東芝）2005.04.28，全文、全図 & US 2005/0121610 A1

文献２：WO 2007/094439 A1（株式会社日立ハイテクノロジーズ）2007.08.23，全文、全図 & US 2009/0218491 A

文献３：JP 2007-272593 A（株式会社トプコン）2007.10.18，段落【０００２】－【０００６】

文献４：JP 2005-345272 A（株式会社日立ハイテクノロジーズ）2005.12.15，全文、全図

文献５：JP 63-168946 A（セイコー電子工業株式会社）1988.07.12，全文、全図

・請求項１－１１に係る発明は、国際調査報告に引用されたいずれの文献にも記載されておらず、当業者にとって自明なものでもない。

Written Opinion of the International Searching Authority

International application No.
PCT/JP2010/000778

Box No. V Reasoned statement under Rule 43bis.1(a)(i) with regard to novelty, inventive step or industrial applicability; citations and explanations supporting such statement

1. Statement

Novelty (N)	Claims 1-11	Yes
	Claims	No
Inventive step (IS)	Claims 1-11	Yes
	Claims	No
Industrial Applicability (IA)	Claims 1-11	Yes
	Claims	No

2.Citations and explanations:

Citation 1: JP2005-116795A (Toshiba Corp.), 28 April 2005 (28.04.2005), entire text; all drawings & US 2005/0121610A1

Citation 2: WO2007/094439A1 (Hitachi High-technologies Corp.), 23 August 2007 (23.08.2007), entire text; all drawings & US 2009/0218491 A

Citation 3: JP2007-272593A (Topcon Corp.), 18 October 2007 (18.10.2007), paragraphs [0002] to [0006] (Family: none)

Citation 4: JP2005-345272 A (Hitachi High-technologies Corp.), 15 December 2005 (15.12.2005), entire text; all drawings (Family: none)

Citation 5: JP63-168946A (Seiko Instruments Inc.), 12 July 1988 (12.07.1988), entire text; all drawings (Family: none)

Any of the inventions as recited in claims 1 to 11 is not disclosed in any of the above Citations, so that it would not have been obvious to the persons in the art at the time the application was filed to reach such inventions based on the teachings of those prior references.

Attorney Docket No. POL-7883

IN THE UNITED STATES PATENT AND TRADEMARK OFFICE

Serial No. : 13/148,864

Applicant(s) : S. OMORI et al.

Customer No.: 24956

ENCLOSED PPH DOCUMENTS:

COPY OF CLAIMS WHICH WERE INDICATED AS HAVING NOVELTY, INVENTIVE STEP AND INDUSTRIAL APPLICABILITY IN PCT APPLICATION NO. PCT/JP2010/000778, AND ENGLISH TRANSLATION THEREOF.

請求の範囲

[請求項1] 走査電子顕微鏡を用いた試料観察方法において、

観察対象パターンのエッジの中で、前記走査電子顕微鏡の電子ビームの走査方向に対して平行な部分を有するパターンエッジの有無を判定するステップと、

前記判定ステップで有の場合、有と判定された前記パターンエッジの近傍領域を選択的にプリドーズの領域に指定するステップと、

指定された前記プリドーズ領域に対し、電子ビームによるプリドーズを実行するステップと、

その後、電子ビーム照射を行い、前記観察対象パターンの画像を取得するステップと、を含むことを特徴とする試料観察方法。

[請求項2] 請求項１記載の試料観察方法において、

前記判定するステップで用いる前記観察対象パターンの形状情報は、製品の設計情報に基づいて作成されることを特徴とする試料観察方法。

[請求項3] 請求項１記載の試料観察方法において、

前記判定するステップで用いる前記観察対象パターンの形状情報は、前記観察対象パターンの観察画像取得時の走査より少ないフレーム積算枚数で取得した前記観察対象パターンの画像を用いて作成されることを特徴とする試料観察方法。

[請求項4] 請求項１記載の試料観察方法において、

指定された前記プリドーズの領域は、前記観察対象パターンの画像を構成する画素の大きさに応じて調整可能であることを特徴とする試料観察方法。

[請求項5] 請求項１記載の試料観察方法において、

前記観察対象パターンの画像を取得するステップに続き、更に、

取得した前記画像の中から、前記観察対象パターンの輪郭の抽出可否を判定するステップを有することを特徴とする試料観察方法。

[請求項6] 請求項５記載の試料観察方法において、

パターン輪郭の抽出可否の判定には、パターンエッジ部の階調値を表すラインプロファイルを用いることを特徴とする試料観察方法。

[請求項7] 請求項５記載の試料観察方法において、

前記パターン輪郭の抽出可否の判定の結果が否の場合、再度プリドーズ領域を指定するステップ、再度指定されたプリドーズ領域への電子ビームによるプリドーズを実行するステップ、電子ビーム照射を行い前記観察対象パターンの画像を取得するステップとを更に有することを特徴とする試料観察方法。

[請求項8] 電子源と、前記電子源から引き出された電子ビームを走査する偏向器と、観察試料を載せる試料台と、前記試料台上の試料に前記電子ビームを照射して得られる電気信号を検出する検出器と、前記電子源と前記偏向器と前記試料台と前記検出器とを制御する制御演算装置と、前記検出器からの電気信号を可視信号に変換し、前記可視化信号に基づく画像を表示する表示画面を備えたコンピュータとを含む走査電子顕微鏡であって、

前記制御演算装置は、前記観察対象パターンのエッジの中に前記電子ビームの走査方向に対して平行なものが含まれるかどうかを判定するパターンレイアウト判定機能と、前記判定で含まれるとの結果の場合、前記観察対象パターンのエッジ近傍の選択された領域をプリドーズ領域に指定するプリドーズ領域指定機能とを更に有し、

前記コンピュータは、前記試料に形成された観察対象パターンの形状情報および指定された前記プリドーズ領域の情報を記憶する記憶部とを更に有することを特徴とする走査電子顕微鏡。

[請求項9] 請求項８記載の走査電子顕微鏡において、

前記制御演算装置は、前記観察対象パターンの輪郭を抽出するラインプロファイル抽出機能を有することを特徴とする走査電子顕微鏡。

[請求項10] 請求項９記載の走査電子顕微鏡において、

前記制御演算装置は、前記ラインプロファイル抽出機能を用いて抽出された前記観察対象パターンの輪郭の抽出の可否を判定するパターン輪郭抽出可否判定機能を有することを特徴とする走査電子顕微鏡。

[請求項11] 請求項８記載の走査電子顕微鏡において、

前記コンピュータは、画像メモリを備えた描画部を有し、

前記画像メモリは、前記検出器で検出された電気信号を蓄積することを特徴とする走査電子顕微鏡。

What is claimed is:

1. A sample observing method using a scanning electron microscope, comprising:

step of judging presence or absence of a pattern edge having a portion in parallel with a scanning direction of an electron beam of the scanning electron microscope among edges of an observation pattern;

step of selectively designating an area around the pattern edge that has been judged as the presence in the judgment step as a pre-dose area;

step of performing a pre-dose with respect to the designated pre-dose area using the electron beam; and

step of capturing an image of the observation pattern through irradiation of the electron beam.

2. The sample observing method according to claim 1, wherein shape information of the observation pattern for the judgment step is made based on design information of a product.

3. The sample observing method according to claim 1, wherein shape information of the observation pattern used in the judgment step is made using an image with the observation pattern, which is captured with a frame

integrated number lower than that for a scanning conducted when capturing an observation image with the observation pattern.

4. The sample observing method according to claim 1, wherein the designated pre-dose area is adjustable in accordance with a size of a pixel for forming the image of the observation pattern.

5. The sample observing method according to claim 1, further comprising step of judging with respect to possibility of extraction of a profile of the observation pattern from the captured images subsequent to the step of capturing the image of the observation pattern.

6. The sample observing method according to claim 5, wherein the step of judging with respect to possibility of extraction of the profile of the pattern is conducted by using a line profile that represents a gradation level of a pattern edge portion.

7. The sample observing method according to claim 5, further comprising:

step of designating the pre-dose area again when the judgment with respect to possibility of extraction of the

pattern profile is negative;

step of performing the pre-dose by applying the electron beam to the pre-dose area designated again; and

step of capturing the image of the observation pattern by irradiating the electron beam.

8. A scanning electron microscope which includes an electron source, a deflector for scanning an electron beam extracted from the electron source, a sample stage on which an observation sample is placed, a detector for detecting an electric signal obtained by irradiating the electron beam to the sample on the sample stage, a control arithmetic unit for controlling the electron source, the deflector, the sample stage and the detector, and a computer for converting the electric signal from the detector into a visual signal, which includes a display screen for displaying an image based on the visual signal, wherein:

the control arithmetic unit further includes a pattern layout judgment function for judging with respect to presence or absence of an edge of those of the observation pattern in parallel with a scanning direction of the electron beam, and a pre-dose area designating function for designating a selected area around the edge of the observation pattern as a pre-dose area when it is

judged as the presence of the edge; and

the computer further includes a storage unit for storing shape information of the observation pattern formed on the sample, and information of the designated pre-dose area.

9. The scanning electron microscope according to claim 8, wherein the control arithmetic unit includes a line profile extraction function for extracting a profile of the observation pattern.

10. The scanning electron microscope according to claim 9, wherein the control arithmetic unit includes a pattern profile extraction judgment function for judging with respect to possibility of extraction of the profile of the observation pattern which has been extracted by using the line profile extraction function.

11. The scanning electron microscope according to claim 8, wherein:

the computer includes a drawing unit provided with an image memory; and

the image memory stores an electric signal detected by the detector.

Attorney Docket No. POL-7883

IN THE UNITED STATES PATENT AND TRADEMARK OFFICE

Serial No. : 13/148,864

Applicant(s) : S. OMORI et al.

Customer No.: 24956

ENCLOSED PPH DOCUMENTS:

STATEMENT THAT THE ENGLISH TRANSLATION OF THE CLAIMS IS ACCURATE.

VERIFICATION

I, Hiroshi TAMURA, a national of Japan, Polaire Intellectual Property Corporation., 3rd Floor TOKYU REIT Hatchobori Bldg. 2-7-1, Hatchobori, Chuo-ku, Tokyo 104-0032 Japan, verify that to the best of my knowledge and belief the following is a true translation made by me of the annexed claims which are International Application, No. PCT/JP2010/000778 filed on February 9, 2010.

Dated this 22nd day of July, 2011

Hiroshi Tamura

Hiroshi TAMURA, Translator

REQUEST FOR PARTICIPATION IN THE PATENT COOPERATION TREATY - PATENT PROSECUTION HIGHWAY (PCT-PPH) PILOT PROGRAM BETWEEN THE EUROPEAN PATENT OFFICE (EPO) AND THE USPTO

Application No.:	13/148,874	Filing Date:	August 10, 2011
Confirmation No.:	5256	Attorney Docket No.:	Q125776
First Named Inventor:	Dario DI CAMILLO		
Title of the Invention:	VEHICLE BODY, MORE PARTICULARLY LAND VEHICLE BODY		

THIS REQUEST FOR PARTICIPATION IN THE PCT-PPH PILOT PROGRAM ALONG WITH THE REQUIRED DOCUMENTS MUST BE SUBMITTED VIA EFS-WEB. INFORMATION REGARDING EFS-WEB IS AVAILABLE AT HTTP://WWW.USPTO.GOV/EBC/EFS_HELP.HTML.

APPLICANT HEREBY REQUESTS PARTICIPATION IN THE PCT-PPH PILOT PROGRAM AND PETITIONS TO MAKE THE ABOVE-IDENTIFIED APPLICATION SPECIAL UNDER THE PCT-PPH PILOT PROGRAM.

The above-identified application is (1) a national stage entry of the corresponding PCT application, or (2) a national stage entry of another PCT application which claims priority to the corresponding PCT application, or (3) a national application that claims domestic/ foreign priority to the corresponding PCT application, or (4) a national application which forms the basis for the priority claim in the corresponding PCT application, or (5) a continuing application of a U.S. application that satisfies one of (1) to (4) above, or (6) a U.S. application that claims domestic benefit to a U.S. provisional application which forms the basis for the priority claim in the corresponding PCT application.

The corresponding PCT application number(s) is/are: PCT/IB2010/050637

The international date of the corresponding PCT application(s) is/are: February 11, 2010

I. List of Required Documents:

a. A copy of the latest international work product (WO/ISA, WO/IPEA, or IPER) in the above–identified corresponding PCT application(s)

☑ Is attached.

☐ Is not attached because the document is already in the U.S. application.

b. A copy of all claims which were indicated as having novelty, inventive step and industrial applicability in the above-identified corresponding PCT application(s)

☑ Is attached.

☐ Is not attached because the document is already in the U.S. application.

c. English translations of the documents in a. and b. above are attached (if the documents are not in the English language). A statement that the English translation is accurate is attached for the document in b. above.

d. (1) An information disclosure statement listing the documents cited in international work products (ISR, WO/ISA, WO/IPEA, IPER) of the corresponding PCT application

☐ Is attached.

☑ Has already been filed in the above-identified U.S. application on August 10, 2011

(2) Copies of all documents (except for U.S. patents or U.S. patent application publications)

☐ Are attached.

☑ Have already been filed in the above-identified U.S. application on August 10, 2011

REQUEST FOR PARTICIPATION IN THE PATENT COOPERATION TREATY - PATENT PROSECUTION HIGHWAY (PCT-PPH) PILOT PROGRAM
BETWEEN THE EUROPEAN PATENT OFFICE (EPO) AND THE USPTO
(continued)

Application No.:	13/148,874
First Named Inventor:	Dario DI CAMILLO

II. Claims Correspondence Table:

Claims in US Application	Patentable Claims in the corresponding PCT Application	Explanation regarding the correspondence
12	4	Claim 12 of the US application is of similar scope to allowable claim 4 of the PCT application, accounting for differences due to claim format requirements.
13		Claim 13 of the US application depends from and is narrower than allowable claim 12.
14		Claim 14 of the US application depends from and is narrower than allowable claim 12.
15		Claim 15 of the US application depends from and is narrower than allowable claim 12.
16		Claim 16 of the US application depends from and is narrower than allowable claim 12.
17		Claim 17 of the US application depends from and is narrower than allowable claim 12.
18		Claim 18 of the US application depends from and is narrower than allowable claim 12.
19		Claim 19 of the US application depends from and is narrower than allowable claim 12.
20		Claim 20 of the US application depends from and is narrower than allowable claim 12.
21		Claim 21 of the US application depends from and is narrower than allowable claim 12.

III. All the claims in the US application sufficiently correspond to the patentable claims in the corresponding PCT application.

IV. Payment of Fees:

☑ **The USPTO is directed and authorized to charge all required fees, except for the Issue Fee and the Publication Fee to Deposit Account No. 19-4880. Please also credit any overpayments to said Deposit Account.**

☐ **Credit Card.**

SEND ALL CORRESPONDENCE TO:
The address associated with Customer Number:

WASHINGTON OFFICE
23373
CUSTOMER NUMBER

Signature	/John M. Bird/ # 46,027, John M. Bird for:	Date	August 10, 2011
Name (Print/Typed)	Raja Saliba	Registration Number	43,078

CLAIMS

1. Vehicle body (1) provided with a metallic supporting structure comprising a plurality of rods (12,14), mutually fastened so as to form a three-dimensional rigid frame, characterized in that it further comprises a plurality of inflatable elements (20-26; 30-36), filled with air or other gas, fastened to said supporting structure (10) and forming panels between said rods (12,14) of said supporting structure (10).

2. Vehicle body (1) according to claim 1, wherein said inflatable elements (20 - 26) are fastened on the outside of said supporting structure (10).

3. Vehicle body (1) according to claim 1, wherein said inflatable elements (30 - 36) are fastened on the inside of said supporting structure (10).

4. Vehicle body (1) according to any of the claims 1 to 3, wherein said inflatable elements (20 - 26; 30 - 36) are formed by a pair of walls made of composite plastic material, welded together along their perimeter so as to form an airtight body, which is inflated by means of injection of a set amount of air or other gas therein.

5. Vehicle body (1) according to any of the claims 1 to 4, wherein said inflatable elements (20 - 26; 30 - 36) are provided as separate independent elements, individually fastened to said supporting structure (10).

6. Vehicle body (1) according to any of the claims 1 to 4, wherein said inflatable elements (20 - 26; 30 - 36) are provided as a single body, divided in a plurality of portions pivotally joined to each other.

7. Vehicle body (1) according to claim 6, wherein said single body is divided in said plurality of portions by means of welds (28).

8. Vehicle body (1) according to any of the claims 1 to 7, wherein said inflatable elements (20 - 26; 30 - 36) are provided with a vent device, allowing the emission of a set

amount of air or other gas when the pressure therein increases beyond a set threshold.

9. Vehicle body (1) according to any of the claims 1 to 8, wherein said inflatable elements are used for obtaining the side doors, the rear door, the front bonnet, the roof, the bumpers and other similar elements of said vehicle body (1).

10. Vehicle comprising a vehicle body according to any of the claims 1 to 9.

11. Vehicle according to claim 10, wherein said vehicle is a land vehicle, more particularly a motor vehicle.

==========

PATENT COOPERATION TREATY

From the INTERNATIONAL SEARCHING AUTHORITY

PCT

NOTIFICATION OF TRANSMITTAL OF THE INTERNATIONAL SEARCH REPORT AND THE WRITTEN OPINION OF THE INTERNATIONAL SEARCHING AUTHORITY, OR THE DECLARATION

(PCT Rule 44.1)

To:
INTERPATENT S.R.L.
Attn. Robba, Pierpaolo
Via Caboto 35
10129 Torino
ITALIE

	Date of mailing *(day/month/year)* 02/06/2010
Applicant's or agent's file reference 10831PCPC	**FOR FURTHER ACTION** See paragraphs 1 and 4 below
International application No. PCT/IB2010/050637	International filing date *(day/month/year)* 11/02/2010
Applicant DI CAMILLO, DARIO	

1. [X] The applicant is hereby notified that the international search report and the written opinion of the International Searching Authority have been established and are transmitted herewith.

   Filing of amendments and statement under Article 19:
   The applicant is entitled, if he so wishes, to amend the claims of the International Application (see Rule 46):

   When? The time limit for filing such amendments is normally two months from the date of transmittal of the International Search Report.

   Where? Directly to the International Bureau of WIPO, 34 chemin des Colombettes 1211 Geneva 20, Switzerland, Fascimile No.: (41–22) 338.82.70

   For more detailed instructions, see the notes on the accompanying sheet.

2. [ ] The applicant is hereby notified that no international search report will be established and that the declaration under Article 17(2)(a) to that effect and the written opinion of the International Searching Authority are transmitted herewith.

3. [ ] **With regard to any protest** against payment of (an) additional fee(s) under Rule 40.2, the applicant is notified that:

   [ ] the protest together with the decision thereon has been transmitted to the International Bureau together with the applicant's request to forward the texts of both the protest and the decision thereon to the designated Offices.

   [ ] no decision has been made yet on the protest; the applicant will be notified as soon as a decision is made.

4. **Reminders**

   Shortly after the expiration of **18 months** from the priority date, the international application will be published by the International Bureau. If the applicant wishes to avoid or postpone publication, a notice of withdrawal of the international application, or of the priority claim, must reach the International Bureau as provided in Rules 90*bis*.1 and 90*bis*.3, respectively, before the completion of the technical preparations for international publication.

   The applicant may submit comments on an informal basis on the written opinion of the International Searching Authority to the International Bureau. The International Bureau will send a copy of such comments to all designated Offices unless an international preliminary examination report has been or is to be established. These comments would also be made available to the public but not before the expiration of 30 months from the priority date.

   Within **19 months** from the priority date, but only in respect of some designated Offices, a demand for international preliminary examination must be filed if the applicant wishes to postpone the entry into the national phase **until 30 months** from the priority date (in some Offices even later); otherwise, the applicant must, **within 20 months** from the priority date, perform the prescribed acts for entry into the national phase before those designated Offices.

   In respect of other designated Offices, the time limit of **30 months** (or later) will apply even if no demand is filed within 19 months.

   See the Annex to Form PCT/IB/301 and, for details about the applicable time limits, Office by Office, see the *PCT Applicant's Guide*, National Chapters.

Name and mailing address of the International Searching Authority European Patent Office, P.B. 5818 Patentlaan 2 NL–2280 HV Rijswijk Tel. (+31–70) 340–2040 Fax: (+31–70) 340–3016	Authorized officer Josephus Wannee

NOTES TO FORM PCT/ISA/220

These Notes are intended to give the basic instructions concerning the filing of amendments under article 19. The Notes are based on the requirements of the Patent Cooperation Treaty, the Regulations and the Administrative Instructions under that Treaty. In case of discrepancy between these Notes and those requirements, the latter are applicable. For more detailed information, see also the *PCT Applicant's Guide*.

In these Notes, "Article", "Rule", and "Section" refer to the provisions of the PCT, the PCT Regulations and the PCT Administrative Instructions, respectively.

INSTRUCTIONS CONCERNING AMENDMENTS UNDER ARTICLE 19

The applicant has, after having received the international search report and the written opinion of the International Searching Authority, one opportunity to amend the claims of the international application. It should however be emphasized that, since all parts of the international application (claims,description and drawings) may be amended during the international preliminary examination procedure, there is usually no need to file amendments of the claims under Article 19 except where, e.g. the applicant wants the latter to be published for the purposes of provisional protection or has another reason for amending the claims before international publication. Furthermore, it should be emphasized that provisional protection is available in some States only (see *PCT Applicant's Guide*, Annex B).

The attention of the applicant is drawn to the fact that amendments to the claims under Article 19 are not allowed where the International Searching Authority has declared, under Article 17(2), that no international search report would be established (see *PCT Applicant's Guide*, International Phase, paragraph 296).

What parts of the international application may be amended?

Under Article 19, only the claims may be amended.

During the international phase, the claims may also be amended (or further amended) under Article 34 before the International Preliminary Examining Authority. The description and drawings may only be amended under Article 34 before the International Examining Authority.

Upon entry into the national phase, all parts of the international application may be amended under Article 28 or, where applicable, Article 41.

When?

Within 2 months from the date of transmittal of the international search report or 16 months from the priority date, whichever time limit expires later. It should be noted, however, that the amendments will be considered as having been received on time if they are received by the International Bureau after the expiration of the applicable time limit but before the completion of the technical preparations for international publication (Rule 46.1).

Where not to file the amendments?

The amendments may only be filed with the International Bureau and not with the receiving Office or the International Searching Authority (Rule 46.2).

Where a demand for international preliminary examination has been/is filed, see below.

How?

Either by cancelling one or more entire claims, by adding one or more new claims or by amending the text of one or more of the claims as filed.

A replacement sheet or sheets containing a complete set of claims in replacement of all the claims previously filed must be submitted.

Where a claim is cancelled, no renumbering of the other claims is required. In all cases where claims are renumbered, they must be renumbered consecutively in Arabic numerals (Section 205(a)).

The amendments must be made in the language in which the international application is to be published.

What documents must/may accompany the amendments?

Letter (Section 205(b)):

The amendments must be submitted with a letter.

The letter will not be published with the international application and the amended claims. It should not be confused with the "Statement under Article 19(1)" (see below, under "Statement under Article 19(1)").

The letter must be in English or French, at the choice of the applicant. However, if the language of the international application is English, the letter must be in English; if the language of the international application is French, the letter must be in French.

NOTES TO FORM PCT/ISA/220 (continued)

The letter must indicate the differences between the claims as filed and the claims as amended. It must, in particular, indicate, in connection with each claim appearing in the international application (it being understood that identical indications concerning several claims may be grouped),whether

(i) the claim is unchanged;

(ii) the claim is cancelled;

(iii) the claim is new;

(iv) the claim replaces one or more claims as filed;

(v) the claim is the result of the division of a claim as filed.

The following examples illustrate the manner in which amendments must be explained in the accompanying letter:

1. [Where originally there were 48 claims and after amendment of some claims there are 51]:
"Claims 1 to 29, 31, 32, 34, 35, 37 to 48 replaced by amended claims bearing the same numbers; claims 30, 33 and 36 unchanged; new claims 49 to 51 added."

2. [Where originally there were 15 claims and after amendment of all claims there are 11]:
"Claims 1 to 15 replaced by amended claims 1 to 11."

3. [Where originally there were 14 claims and the amendments consist in cancelling some claims and in adding new claims]:
"Claims 1 to 6 and 14 unchanged; claims 7 to 13 cancelled; new claims 15, 16 and 17 added." or
"Claims 7 to 13 cancelled; new claims 15, 16 and 17 added; all other claims unchanged."

4. [Where various kinds of amendments are made]:
"Claims 1–10 unchanged; claims 11 to 13, 18 and 19 cancelled; claims 14, 15 and 16 replaced by amended claim 14; claim 17 subdivided into amended claims 15, 16 and 17; new claims 20 and 21 added."

"Statement under article 19(1)" (Rule 46.4)

The amendments may be accompanied by a statement explaining the amendments and indicating any impact that such amendments might have on the description and the drawings (which cannot be amended under Article 19(1)).

The statement will be published with the international application and the amended claims.

It must be in the language in which the international application is to be published.

It must be brief, not exceeding 500 words if in English or if translated into English.

It should not be confused with and does not replace the letter indicating the differences between the claims as filed and as amended. It must be filed on a separate sheet and must be identified as such by a heading, preferably by using the words "Statement under Article 19(1)."

It may not contain any disparaging comments on the international search report or the relevance of citations contained in that report. Reference to citations, relevant to a given claim, contained in the international search report may be made only in connection with an amendment of that claim.

Consequence if a demand for international preliminary examination has already been filed

If, at the time of filing any amendments and any accompanying statement, under Article 19, a demand for international preliminary examination has already been submitted, the applicant must preferably, at the time of filing the amendments (and any statement) with the International Bureau, also file with the International Preliminary Examining Authority a copy of such amendments (and of any statement) and, where required, a translation of such amendments for the procedure before that Authority (see Rules 55.3(a) and 62.2, first sentence). For further information, see the Notes to the demand form (PCT/IPEA/401).

If a demand for international preliminary examination is made, the written opinion of the International Searching Authority will, except in certain cases where the International Preliminary Examining Authority did not act as International Searching Authority and where it has notified the International Bureau under Rule 66.1*bis*(b), be considered to be a written opinion of the International Preliminary Examining Authority. If a demand is made, the applicant may submit to the International Preliminary Examining Authority a reply to the written opinion together, where appropriate, with amendments before the expiration of 3 months from the date of mailing of Form PCT/ISA/220 or before the expiration of 22 months from the priority date, whichever expires later (Rule 43*bis*.1(c)).

Consequence with regard to translation of the international application for entry into the national phase

The applicant's attention is drawn to the fact that, upon entry into the national phase, a translation of the claims as amended under Article 19 may have to be furnished to the designated/elected Offices, instead of, or in addition to, the translation of the claims as filed.

For further details on the requirements of each designated/elected Office, see the *PCT Applicant's Guide*, National Chapters.

PATENT COOPERATION TREATY

From the
INTERNATIONAL SEARCHING AUTHORITY

To:

see form PCT/ISA/220

PCT

WRITTEN OPINION OF THE INTERNATIONAL SEARCHING AUTHORITY

(PCT Rule 43*bis*.1)

Date of mailing
(day/month/year) see form PCT/ISA/210 (second sheet)

Applicant's or agent's file reference
see form PCT/ISA/220

FOR FURTHER ACTION
See paragraph 2 below

International application No.	International filing date *(day/month/year)*	Priority date *(day/month/year)*
PCT/IB2010/050637	11.02.2010	11.02.2009

International Patent Classification (IPC) or both national classification and IPC
INV. B62D23/00 B62D29/04

Applicant
DI CAMILLO, DARIO

1. This opinion contains indications relating to the following items:

- ☒ Box No. I Basis of the opinion
- ☒ Box No. II Priority
- ☐ Box No. III Non-establishment of opinion with regard to novelty, inventive step and industrial applicability
- ☐ Box No. IV Lack of unity of invention
- ☒ Box No. V Reasoned statement under Rule 43*bis*.1(a)(i) with regard to novelty, inventive step and industrial applicability; citations and explanations supporting such statement
- ☒ Box No. VI Certain documents cited
- ☐ Box No. VII Certain defects in the international application
- ☐ Box No. VIII Certain observations on the international application

2. **FURTHER ACTION**

If a demand for international preliminary examination is made, this opinion will usually be considered to be a written opinion of the International Preliminary Examining Authority ("IPEA") except that this does not apply where the applicant chooses an Authority other than this one to be the IPEA and the chosen IPEA has notifed the International Bureau under Rule 66.1*bis*(b) that written opinions of this International Searching Authority will not be so considered.

If this opinion is, as provided above, considered to be a written opinion of the IPEA, the applicant is invited to submit to the IPEA a written reply together, where appropriate, with amendments, before the expiration of 3 months from the date of mailing of Form PCT/ISA/220 or before the expiration of 22 months from the priority date, whichever expires later.

For further options, see Form PCT/ISA/220.

3. For further details, see notes to Form PCT/ISA/220.

Name and mailing address of the ISA:	Date of completion of this opinion	Authorized Officer
European Patent Office P.B. 5818 Patentlaan 2 NL-2280 HV Rijswijk - Pays Bas Tel. +31 70 340 - 2040 Fax: +31 70 340 - 3016	see form PCT/ISA/210	Westland, Paul Telephone No. +31 70 340-3722

Box No. I Basis of the opinion

1. With regard to the **language**, this opinion has been established on the basis of:

   ☒ the international application in the language in which it was filed

   ☐ a translation of the international application into , which is the language of a translation furnished for the purposes of international search (Rules 12.3(a) and 23.1 (b)).

2. ☐ This opinion has been established taking into account the **rectification of an obvious mistake** authorized by or notified to this Authority under Rule 91 (Rule 43bis.1(a))

3. With regard to any **nucleotide and/or amino acid sequence** disclosed in the international application, this opinion has been established on the basis of a sequence listing filed or furnished:

   a. (means)

   ☐ on paper

   ☐ in electronic form

   b. (time)

   ☐ in the international application as filed

   ☐ together with the international application in electronic form

   ☐ subsequently to this Authority for the purposes of search

4. ☐ In addition, in the case that more than one version or copy of a sequence listing has been filed or furnished, the required statements that the information in the subsequent or additional copies is identical to that in the application as filed or does not go beyond the application as filed, as appropriate, were furnished.

5. Additional comments:

Box No. II Priority

1. ☒ The validity of the priority claim has not been considered because the International Searching Authority does not have in its possession a copy of the earlier application whose priority has been claimed or, where required, a translation of that earlier application. This opinion has nevertheless been established on the assumption that the relevant date (Rules 43*bis*.1 and 64.1) is the claimed priority date.

2. ☐ This opinion has been established as if no priority had been claimed due to the fact that the priority claim has been found invalid (Rules 43*bis*.1 and 64.1). Thus for the purposes of this opinion, the international filing date indicated above is considered to be the relevant date.

3. Additional observations, if necessary:

Box No. V Reasoned statement under Rule 43*bis*.1(a)(i) with regard to novelty, inventive step or industrial applicability; citations and explanations supporting such statement

1. Statement

Novelty (N)	Yes:	Claims	1-11
	No:	Claims	
Inventive step (IS)	Yes:	Claims	4, 6, 7
	No:	Claims	1-3, 5, 8-11
Industrial applicability (IA)	Yes:	Claims	1-11
	No:	Claims	

2. Citations and explanations

see separate sheet

Box No. VI Certain documents cited

1. Certain published documents (Rules 43*bis*.1 and 70.10)

and / or

2. Non-written disclosures (Rules 43*bis*.1 and 70.9)

see form 210

Re Item V

Reasoned statement with regard to novelty, inventive step or industrial applicability; citations and explanations supporting such statement

Reference is made to the following documents:

D1 US 2001/000119 A1 (JAEKEL FEDERICO G [CA] ET AL) 5 April 2001 (2001-04-05)

D2 DE 103 56 460 A1 (OPEL ADAM AG [DE] GM GLOBAL TECH OPERATIONS INC [US]) 21 July 2005 (2005-07-21)

D3 CN 201 220 643 Y (BIN LI [CN]) 15 April 2009 (2009-04-15)

D4 WO 89/03328 A1 (LEE SANG MAN [US]; PARK HEUNG JONG [KR]) 20 April 1989 (1989-04-20)

D5 US 2003/191222 A1 (SUZUKI KATSUHIKO [JP] ET AL) 9 October 2003 (2003-10-09)

D6 US 6 341 813 B1 (TAGHADDOS HAMID [AE]) 29 January 2002 (2002-01-29)

D7 US 2008/129025 A1 (RATAJSKI DANIEL JAMES [US] ET AL RATAJSKI DANIEL JAMES [US] ET AL) 5 June 2008 (2008-06-05)

The present application does not meet the criteria of Article 33(3) PCT, because the subject-matter of independent claim 1 does not involve an inventive step.

Document D1 is regarded as being the prior art closest to the subject-matter of claim 1, and discloses (the references in parentheses refer to this document):

Vehicle body (10) provided with a metallic supporting structure comprising a plurality of rods (68, 82, 126, 128, 98, 100 etc.), mutually fastened so as to form a three-dimensional rigid frame (i.e. space frame, fig. 1).

The subject-matter of claim 1 therefore differs from this known vehicle body in that it further comprises a plurality of inflatable elements, filled with air or other gas, fastened to said supporting structure and forming panels between said rods of said supporting structure.

The subject-matter of independent claim 1 is therefore new.

The problem to be solved by the present invention may therefore be regarded as replace the conventional body panels with panels having a reduced weight and improved safety.

The solution proposed in claim 1 of the present application cannot be considered as involving an inventive step (Article 33(3) PCT) for the following reasons:

The above mentioned features missing from D1 have already been employed for the same purpose in a similar vehicle body described in document D2 (see the texts indicated in the search report). It would be obvious to the person skilled in the art, namely when the same result is to be achieved, to apply these features with corresponding effect to a vehicle body according to document D1, thereby arriving at a vehicle body according to claim 1.

Dependent claims 2, 3, 5 and 8-11 do not contain any features which, in combination with the features of any claim to which they refer, meet the requirements of the PCT in respect of inventive step, see document D2 and the texts indicated in the search report.

The combination of the features of dependent claim 4 or of claims 6 and 7 is neither known from, nor rendered obvious by, the available prior art.

INTERNATIONAL SEARCH REPORT

International application No
PCT/IB2010/050637

A. CLASSIFICATION OF SUBJECT MATTER
INV. B62D23/00 B62D29/04
ADD.

According to International Patent Classification (IPC) or to both national classification and IPC

B. FIELDS SEARCHED

Minimum documentation searched (classification system followed by classification symbols)
B62D

Documentation searched other than minimum documentation to the extent that such documents are included in the fields searched

Electronic data base consulted during the international search (name of data base and, where practical, search terms used)

EPO-Internal

C. DOCUMENTS CONSIDERED TO BE RELEVANT

Category*	Citation of document, with indication, where appropriate, of the relevant passages	Relevant to claim No.
Y	US 2001/000119 A1 (JAEKEL FEDERICO G [CA] ET AL) 5 April 2001 (2001-04-05) figure 1 paragraph [0003] -----	1-3,5, 8-11
Y	DE 103 56 460 A1 (OPEL ADAM AG [DE] GM GLOBAL TECH OPERATIONS INC [US]) 21 July 2005 (2005-07-21) claims 1-3,10,13; figures paragraph [0008] - paragraph [0010] paragraphs [0029], [0030] -----	1-3,5, 8-11
X,P	CN 201 220 643 Y (BIN LI [CN]) 15 April 2009 (2009-04-15) * abstract; figures -----	1,3,6, 9-11

-/--

[X] Further documents are listed in the continuation of Box C.

[X] See patent family annex.

* Special categories of cited documents :

"A" document defining the general state of the art which is not considered to be of particular relevance

"E" earlier document but published on or after the international filing date

"L" document which may throw doubts on priority claim(s) or which is cited to establish the publication date of another citation or other special reason (as specified)

"O" document referring to an oral disclosure, use, exhibition or other means

"P" document published prior to the international filing date but later than the priority date claimed

"T" later document published after the international filing date or priority date and not in conflict with the application but cited to understand the principle or theory underlying the invention

"X" document of particular relevance; the claimed invention cannot be considered novel or cannot be considered to involve an inventive step when the document is taken alone

"Y" document of particular relevance; the claimed invention cannot be considered to involve an inventive step when the document is combined with one or more other such documents, such combination being obvious to a person skilled in the art.

"&" document member of the same patent family

Date of the actual completion of the international search	Date of mailing of the international search report
27 May 2010	02/06/2010
Name and mailing address of the ISA/ European Patent Office, P.B. 5818 Patentlaan 2 NL – 2280 HV Rijswijk Tel. (+31-70) 340-2040, Fax: (+31-70) 340-3016	Authorized officer Westland, Paul

INTERNATIONAL SEARCH REPORT

International application No
PCT/IB2010/050637

C(Continuation). DOCUMENTS CONSIDERED TO BE RELEVANT

Category*	Citation of document, with indication, where appropriate, of the relevant passages	Relevant to claim No.
A	WO 89/03328 A1 (LEE SANG MAN [US]; PARK HEUNG JONG [KR]) 20 April 1989 (1989-04-20) figures 1,2,4,5 page 4, line 13 - page 5, line 15 page 6, line 13 - page 7, line 10	1,9-11
A	US 2003/191222 A1 (SUZUKI KATSUHIKO [JP] ET AL) 9 October 2003 (2003-10-09) claims 32,36; figures 2A,2B paragraph [0073]	1,9-11
A	US 6 341 813 B1 (TAGHADDOS HAMID [AE]) 29 January 2002 (2002-01-29) the whole document	1,9-11
A	US 2008/129025 A1 (RATAJSKI DANIEL JAMES [US] ET AL RATAJSKI DANIEL JAMES [US] ET AL) 5 June 2008 (2008-06-05) figures 1,2 paragraph [0019] - paragraph [0021]	1,9-11

INTERNATIONAL SEARCH REPORT

Information on patent family members

International application No
PCT/IB2010/050637

Patent document cited in search report		Publication date	Patent family member(s)		Publication date
US 2001000119	A1	05-04-2001	US	2001050497 A1	13-12-2001
DE 10356460	A1	21-07-2005	NONE		
CN 201220643	Y	15-04-2009	CN	101259852 A	10-09-2008
WO 8903328	A1	20-04-1989	EP	0335952 A1	11-10-1989
			JP	1503378 T	16-11-1989
			US	4995659 A	26-02-1991
US 2003191222	A1	09-10-2003	JP	4135881 B2	20-08-2008
			JP	2004002612 A	08-01-2004
US 6341813	B1	29-01-2002	NONE		
US 2008129025	A1	05-06-2008	NONE		

UNITED STATES PATENT AND TRADEMARK OFFICE

UNITED STATES DEPARTMENT OF COMMERCE
United States Patent and Trademark Office
Address: COMMISSIONER FOR PATENTS
P.O. Box 1450
Alexandria, Virginia 22313-1450
www.uspto.gov

APPLICATION NO.	FILING DATE	FIRST NAMED INVENTOR	ATTORNEY DOCKET NO.	CONFIRMATION NO.
13/148,874	08/10/2011	Dario Di Camillo	Q125776	5256

23373 7590 11/17/2011
SUGHRUE MION, PLLC
2100 PENNSYLVANIA AVENUE, N.W.
SUITE 800
WASHINGTON, DC 20037

EXAMINER
LYJAK, LORI LYNN

ART UNIT	PAPER NUMBER
3612	

NOTIFICATION DATE	DELIVERY MODE
11/17/2011	ELECTRONIC

Please find below and/or attached an Office communication concerning this application or proceeding.

The time period for reply, if any, is set in the attached communication.

Notice of the Office communication was sent electronically on above-indicated "Notification Date" to the following e-mail address(es):

USPTO@sughrue.com
sughrue@sughrue.com
PPROCESSING@SUGHRUE.COM

UNITED STATES PATENT AND TRADEMARK OFFICE

Commissioner for Patents
United States Patent and Trademark Office
P.O. Box 1450
Alexandria, VA 22313-1450
www.uspto.gov

NOV 16 2011

SUGHRUE MION, PLLC
2100 PENNSYLVANIA AVENUE, N.W.
SUITE 800
WASHINGTON DC 20037

In re application of Dario Di Camillo Application No. 13/148,874 Filed: August 10, 2011 For: VEHICLE BODY, MORE PARTICULARLY LAND VEHICLE BODY	**DECISION ON REQUEST TO PARTICIPATE IN PATENT PROSECUTION HIGHWAY PROGRAM AND PETITION TO MAKE SPECIAL UNDER 37 CFR 1.102(a)**

This is a decision on the renewed request to participate in the Patent Prosecution Highway (PPH) program and the petition under 37 CFR 1.102(a), filed August 10, 2011 to make the above-identified application special.

The request and petition are **GRANTED**.

A grantable request to participate in the PPH program and petition to make special require:

(1) The U.S. application must disclose an eligible relationship to one or more PCT applications filed in the EPO or USPTO;
(2) Applicant must submit a copy of the allowable/patentable claim(s) from the PCT application(s) latest international work product (the written opinion or the IPER) along with an English translation thereof and a statement that the English translation is accurate;
(3) All the claims in the U.S. application must sufficiently correspond or be amended to sufficiently correspond to the allowable/patentable claim(s) in the PCT application(s);
(4) Examination of the U.S. application has not begun;
(5) Applicant must submit a copy of the latest international work product from the PCT application containing the allowable/patentable claim(s) along with an English translation thereof and a statement that the English translation is accurate;
(6) Applicant must submit an IDS listing the documents cited by the PCT examiner in the international work product along with copies of documents except U.S. patents or U.S. patent application publications.

The request to participate in the PPH pilot program complies with the above requirements. Therefore, the above-identified application has been accorded "special" status.

All other inquiries concerning the examination or status of the application should be directed to the Patent Application Information Retrieval (PAIR) system.

The application is being forwarded to the examiner for action on the merits commensurate with this decision.

Any inquiry regarding this decision should be directed to Mikado Buiz, Quality Assurance Specialist, at (571) 272-6578.

/ Mikado Buiz /

Mikado Buiz,
Quality Assurance Specialist
Technology Center 3600

MB/MB: 11/15/11

UNITED STATES PATENT AND TRADEMARK OFFICE

UNITED STATES DEPARTMENT OF COMMERCE
United States Patent and Trademark Office
Address: COMMISSIONER FOR PATENTS
P.O. Box 1450
Alexandria, Virginia 22313-1450
www.uspto.gov

APPLICATION NO.	FILING DATE	FIRST NAMED INVENTOR	ATTORNEY DOCKET NO.	CONFIRMATION NO.
13/148,907	08/10/2011	Sang Cheol Lee	1029.017	5470

36405 7590 11/09/2011
MANNAVA & KANG, P.C.
11240 WAPLES MILL ROAD
Suite 300
FAIRFAX, VA 22030

EXAMINER	
ART UNIT	PAPER NUMBER
2838	

NOTIFICATION DATE	DELIVERY MODE
11/09/2011	ELECTRONIC

Please find below and/or attached an Office communication concerning this application or proceeding.

The time period for reply, if any, is set in the attached communication.

Notice of the Office communication was sent electronically on above-indicated "Notification Date" to the following e-mail address(es):

judyc@MANNAVAKANG.COM

UNITED STATES PATENT AND TRADEMARK OFFICE

Commissioner for Patents
United States Patent and Trademark Office
P.O. Box 1450
Alexandria, VA 22313-1450
www.uspto.gov

MANNAVA & KANG, P.C.
11240 WAPLES MILL ROAD
Suite 300
FAIRFAX VA 22030

In re Application of	**: DECISION ON REQUEST TO**
LEE et al.	**: PARTICIPATE IN THE PATENT**
Application No.: 13/148,907	**: PROSECUTION HIGHWAY**
Filed: 10 August 2011	**: PROGRAM AND PETITION**
Attorney Docket No.: 1029.017	**: TO MAKE SPECIAL UNDER**
For: POWER REGULATOR AND	**: 37 CFR 1.102(a)**
REMOTE POWER CONTROL DEVICE	

This is a decision on the request to participate in the Patent Prosecution Highway (PPH) program and the petition under 37 CFR 1.102(a), filed 10 August 2011, to make the above-identified application special.

The request and petition are **GRANTED**.

Discussion

A grantable request to participate in the PPH program and petition to make special require:

1. The U.S. application is

    a. a Paris Convention application which either
        i. validly claims priority under 35 U.S.C. 119(a) and 37 CFR 1.55 to one or more applications filed in the KIPO, or
        ii. validly claims priority under 35 U.S.C. 119(a)/365(a) to a PCT application that contains no priority claims,

    or

    b. a national stage application under the PCT (an application which entered the national stage in the U.S. from a PCT international application after compliance with 35 U.S.C. 371), which PCT application
        i. validly claims priority under 35 U.S.C. 365(b) to an application filed in the KIPO, or
        ii. validly claims priority under 35 U.S.C. 365(b) to a PCT application that contains no priority claims, or
        iii. contains no priority claim,

    or

    c. a so-called bypass application filed under 35 U.S.C. 111(a) which validly claims benefit under 35 U.S.C. 120 to a PCT application, which PCT application

i. validly claims priority under 35 U.S.C. 365(b) to an application filed in the KIPO, or
ii. validly claims priority under 35 U.S.C. 365(b) to a PCT application that contains no priority claims, or
iii. contains no priority claim;

2. Applicant must submit a copy of:
   a. The allowable/patentable claim(s) from the KR application(s);
   b. An English translation of the allowable/patentable claim(s), and
   c. A statement that the English translation is accurate (if the claims were published in a language other than English);
3. Applicant must:
   a. Ensure that all the claims in the U.S. application must sufficiently correspond or be amended to sufficiently correspond to the allowable/patentable claim(s) in the KR application(s), and
   b. Submit a claims correspondence table in English;
4. Examination of the U.S. application has not begun;
5. Applicant must submit:
   a. A copy of all the office actions (which are relevant to patentability), excluding "Decision to Grant a Patent" from each of the KR application(s) containing the allowable/patentable claim(s);
   b. An English language translation of the KIPO office action; and
   c. A statement that the English translation is accurate (if the office actions are not in the English language);
6. Applicant must submit:
   a. An IDS listing the documents cited by the KIPO examiner in the KIPO office action (unless already filed in this application); and
   b. Copies of all the documents cited in the KIPO office action, except U.S. patents or U.S. patent application publications (unless already filed in this application);

The request to participate in the PPH program and petition comply with the above requirements. Accordingly, the above-identified application has been accorded "special" status.

Telephone inquiries concerning this decision should be directed to Colleen Dunn at 571-272-1170.

All other inquiries concerning the examination or status of the application is accessible in the PAIR system at http://www.uspto.gov/ebc/index.html.

/Colleen Dunn/

Colleen Dunn
Quality Assurance Specialist
Technology Center 2800

UNITED STATES PATENT AND TRADEMARK OFFICE

Commissioner for Patents
United States Patent and Trademark Office
P.O. Box 1450
Alexandria, VA 22313-1450
www.uspto.gov

Troutman Sanders LLP
5200 Bank of America Plaza
600 Peachtree Street, N.E.
Suite 5200
Atlanta, GA 30308-2216

MAILED
SEP 09 2011
PCT LEGAL ADMINISTRATION

In re Application of: YUAN et al.
Application No.: 13/148,912
PCT No.: PCT/US2010/030367
Int. Filing Date: 08 April 2010
Priority Date: 09 April 2009
Attorney Docket No.: GTRC4797
For: SUPERJUNCTION COLLECTORS FOR TRANSISTORS

DECISION ON PETITION
UNDER 37 CFR 1.137(b)

This decision is in response to applicant's "Petition for Revival of an International Application for Patent Designating the U.S. Abandoned Unintentionally under 37 CFR 1.137(b)" filed 10 August 2011 to revive international application PCT/US2010/030367.

On 10 August 2011, applicant filed international application PCT/US2010/030367, which designated the United States and claimed a priority date of 09 April 2009. Pursuant to 37 CFR 1.495, the deadline for payment of the basic national fee in the United States was to expire 30 months from the priority date, 09 October 2011.

On 10 August 2011, applicant filed a transmittal letter for entry into the national stage in the United States which was accompanied by, inter alia: the basic national fee, a copy of the international application; an application data sheet, a preliminary amendment; and the petition to revive under 37 CFR 1.137(b) considered herein.

Since the international application was not abandoned, the present petition to revive is not necessary. Therefore, applicant's petition to revive international application PCT/US2010/030367 is **DISMISSED as moot**. The petition fee will be refunded to counsel's Deposit Account.

This application is being returned to the United States Designated/Elected Office for processing in accordance with this decision.

Anthony Smith
Attorney-Advisor
Office of PCT Legal Administration
Telephone: (571) 272-3298

PTO/SB/20PCT-JP (05-10)
Approved for use through 01/31/2012. OMB 0651-0058
U.S. Patent and Trademark Office; U. S. DEPARTMENT OF COMMERCE
Under the Paperwork Reduction Act of 1995, no persons are required to respond to a collection of information unless it displays a valid OMB control number.

REQUEST FOR PARTICIPATION IN THE PATENT COOPERATION TREATY - PATENT PROSECUTION HIGHWAY (PCT-PPH) PILOT PROGRAM BETWEEN THE JAPAN PATENT OFFICE (JPO) AND THE USPTO

Application No:	13148946	Filing date:	10 August 2011
First Named Inventor:	Masami NIIKURA		
Title of the Invention:	Personal Ornament		

THIS REQUEST FOR PARTICIPATION IN THE PCT-PPH PILOT PROGRAM ALONG WITH THE REQUIRED DOCUMENTS MUST BE SUBMITTED VIA EFS-WEB. INFORMATION REGARDING EFS-WEB IS AVAILABLE AT HTTP://WWW.USPTO.GOV/EBC/EFS_HELP.HTML

APPLICANT HEREBY REQUESTS PARTICIPATION IN THE PCT-PPH PROGRAM AND PETITIONS TO MAKE THE ABOVE-IDENTIFIED APPLICATION SPECIAL UNDER THE PCT-PPH PROGRAM.

The above-identified application is (1) a national stage entry of the corresponding PCT application, or (2) a national stage entry of another PCT application which claims priority to the corresponding PCT application, or (3) a national application that claims domestic/ foreign priority to the corresponding PCT application, or (4) a national application which forms the basis for the priority claim in the corresponding PCT application, or (5) a continuing application of a U.S. application that satisfies one of (1) to (4) above, or (6) a U.S. application that claims domestic benefit to a U.S. provisional application which forms the basis for the priority claim in the corresponding PCT application.

The corresponding PCT application number(s) is/are: PCT/JP2010/051325

The international date of the corresponding PCT application(s) is/are: 1 February 2010

I. List of Required Documents:

a. **A copy of the latest international work product (WO/ISA, WO/IPEA, or IPER) in the above–identified corresponding PCT application(s)**

- [✓] Is attached.
- [ ] Is not attached because the document is already in the U.S. application.

b. **A copy of all claims which were indicated as having novelty, inventive step and industrial applicability in the above-identified corresponding PCT application(s).**

- [ ] Is attached.
- [✓] Is not attached because the document is already in the U.S. application.

c. **English translations of the documents in a. and b. above are attached (if the documents are not in the English language). A statement that the English translation is accurate is attached for the document in b. above.**

This collection of information is required by 35 U.S.C. 119, 37 CFR 1.55, and 37 CFR 1.102(d). The information is required to obtain or retain a benefit by the public, which is to file (and by the USPTO to process) an application. Confidentiality is governed by 35 U.S.C. 122 and 37 CFR 1.11 and 1.14. This collection is estimated to take 2 hours to complete, including gathering, preparing, and submitting the completed application form to the USPTO. Time will vary depending upon the individual case. Any comments on the amount of time you require to complete this form and/or suggestions for reducing this burden should be sent to the Chief Information Officer, U.S. Patent and Trademark Office, U.S. Department of Commerce, P.O. Box 1450, Alexandria, VA 22313-1450. DO NOT SEND FEES OR COMPLETED FORMS TO THIS ADDRESS.

Approved for use through 01/31/2012. OMB 0651-0058
U.S.Patent and Trademark Office; U.S. DEPARTMENT OF COMMERCE
Under the Paperwork Reduction Act of 1995, no persons are required to respond to a collection of information unless it displays a valid OMB control number.

REQUEST FOR PARTICIPATION IN THE PCT-PPH PILOT PROGRAM BETWEEN THE JPO AND THE USPTO

(continued)

Application No.:	13148946
First Named Inventor	Masami NIIKURA

d. **(1) An information disclosure statement listing the documents cited in the international work products (ISR, WO/ISA, WO/IPEA, IPER) of the corresponding PCT application.**

☑ Is attached

☑ Has already been filed in the above-identified U.S. application on 10 August 2011

(2) Copies of all documents (except) for U.S. patents or U.S. patent application publications)

☑ Are attached.

☑ Have already been filed in the above-identified U.S. application on 10 August 2011

II. Claims Correspondence Table:

Claims in US Application	Patentable Claims in the corresponding PCT Application	Explanation regarding the correspondence
1	1	Accurate translation of like-numbered claim in international application
2	2	Accurate translation of like-numbered claim in international application
3	3	Original claim 3 is an accurate translation of like-numbered claim in international application.
		Original claim 3 was amended by preliminary amendment of 10 August 2011 to remove
		multiple dependency ("claim 1 or 2" in original claim was amended to read --claim 1--).
4	3	Original claim 3 is an accurate translation of like-numbered claim in international application.
		Claim 4, added by preliminary amendment of 10 August 2011, is identical to original claim 3, except
		that, to remove multiple dependency, "claim 1 or 2" in original claim 3 became --claim 2-- in claim 4.

III. All the claims in the US application sufficiently correspond to the patentable claims in the corresponding PCT application.

Signature /Gerald T. Peters/	Date 6 October 2011
Name (Print/Typed) Gerald T. Peters	Registration Number 42992

Privacy Act Statement

The **Privacy Act of 1974 (P.L. 93-579)** requires that you be given certain information in connection with your submission of the attached form related to a patent application or patent. Accordingly, pursuant to the requirements of the Act, please be advised that: (1) the general authority for the collection of this information is 35 U.S.C. 2(b)(2); (2) furnishing of the information solicited is voluntary; and (3) the principal purpose for which the information is used by the U.S. Patent and Trademark Office is to process and/or examine your submission related to a patent application or patent. If you do not furnish the requested information, the U.S. Patent and Trademark Office may not be able to process and/or examine your submission, which may result in termination of proceedings or abandonment of the application or expiration of the patent.

The information provided by you in this form will be subject to the following routine uses:

1. The information on this form will be treated confidentially to the extent allowed under the Freedom of Information Act (5 U.S.C. 552) and the Privacy Act (5 U.S.C 552a). Records from this system of records may be disclosed to the Department of Justice to determine whether disclosure of these records is required by the Freedom of Information Act.
2. A record from this system of records may be disclosed, as a routine use, in the course of presenting evidence to a court, magistrate, or administrative tribunal, including disclosures to opposing counsel in the course of settlement negotiations.
3. A record in this system of records may be disclosed, as a routine use, to a Member of Congress submitting a request involving an individual, to whom the record pertains, when the individual has requested assistance from the Member with respect to the subject matter of the record.
4. A record in this system of records may be disclosed, as a routine use, to a contractor of the Agency having need for the information in order to perform a contract. Recipients of information shall be required to comply with the requirements of the Privacy Act of 1974, as amended, pursuant to 5 U.S.C. 552a(m).
5. A record related to an International Application filed under the Patent Cooperation Treaty in this system of records may be disclosed, as a routine use, to the International Bureau of the World Intellectual Property Organization, pursuant to the Patent Cooperation Treaty.
6. A record in this system of records may be disclosed, as a routine use, to another federal agency for purposes of National Security review (35 U.S.C. 181) and for review pursuant to the Atomic Energy Act (42 U.S.C. 218(c)).
7. A record from this system of records may be disclosed, as a routine use, to the Administrator, General Services, or his/her designee, during an inspection of records conducted by GSA as part of that agency's responsibility to recommend improvements in records management practices and programs, under authority of 44 U.S.C. 2904 and 2906. Such disclosure shall be made in accordance with the GSA regulations governing inspection of records for this purpose, and any other relevant (*i.e.*, GSA or Commerce) directive. Such disclosure shall not be used to make determinations about individuals.
8. A record from this system of records may be disclosed, as a routine use, to the public after either publication of the application pursuant to 35 U.S.C. 122(b) or issuance of a patent pursuant to 35 U.S.C. 151. Further, a record may be disclosed, subject to the limitations of 37 CFR 1.14, as a routine use, to the public if the record was filed in an application which became abandoned or in which the proceedings were terminated and which application is referenced by either a published application, an application open to public inspection or an issued patent.
9. A record from this system of records may be disclosed, as a routine use, to a Federal, State, or local law enforcement agency, if the USPTO becomes aware of a violation or potential violation of law or regulation.

UNITED STATES PATENT AND TRADEMARK OFFICE

Commissioner for Patents
United States Patent and Trademark Office
P.O. Box 1450
Alexandria, VA 22313-1450
www.uspto.gov

Gerald T Peters
JTT Patent Services, LLC
23-21 Yayoigaoka-cho
Takatsuki-shi
Osaka-fu 569-1-021 JP JAPAN

MAILED
FEB 23 2012
OFFICE OF PETITIONS

In re Application of
Masami Nikura
Application No.: 13/148,946
Filed: August 10, 2011
Attorney Docket No.: PERSONAL ORNAMENT

: REQUEST TO
: PARTICIPATE IN THE PATENT
: PROSECUTION HIGHWAY
: PROGRAM AND PETITION
: TO MAKE SPECIAL UNDER
: 37 CFR 1.102(a)

This is a decision on the request to participate in the Patent Prosecution Highway (PPH) program and the petition under 37 CFR 1.102(a), filed October 6, 2011, to make the above-identified application special.

The request and petition are **GRANTED**.

Discussion

A grantable request to participate in the PPH pilot program and petition to make special require:

1. The U.S. application is

    a. a Paris Convention application which either
        i. validly claims priority under 35 U.S.C. 119(a) and 37 CFR 1.55 to one or more applications filed in the JPO, or
        ii. validly claims priority to a PCT application that contains no priority claims, or
    b. a national stage application under the PCT (an application which entered the national stage in the U.S. from a PCT international application after compliance with 35 U.S.C. 371), which PCT application
        i. validly claims priority to an application filed in the JPO, or
        ii. validly claims priority to a PCT application that contains no priority claims, or
        iii. contains no priority claim, or
    c. a so-called bypass application filed under 35 U.S.C. 111(a) which validly claims benefit under 35 U.S.C. 120 to a PCT application, which PCT application
        i. validly claims priority to an application filed in the JPO, or
        ii. validly claims priority to a PCT application that contains no priority claims, or

iii. contains no priority claim;

2. Applicant must submit a copy of:
   a. The allowable/patentable claim(s) from the JPO application(s);
   b. An English translation of the allowable/patentable claim(s) and
   c. A statement that the English translation is accurate;
3. Applicant must:
   a. Ensure all the claims in the U.S. application must sufficiently correspond or be amended to sufficiently correspond to the allowable/patentable claim(s) in the JPO application(s) and
   b. Submit a claims correspondence table in English;
4. Examination of the U.S. application has not begun;
5. Applicant must submit:
   a. Documentation of prior office action:
      i. a copy of the office action(s) just prior to the "Decision to Grant a Patent" from each of the JPO application(s) containing the allowable/patentable claim(s) or
      ii. if the allowable/patentable claims(s) are from a "Notification of Reasons for Refusal" then the Notification of Reasons for Refusal or
      iii. if the JPO application is a first action allowance then no office action from the JPO is necessary should be indicated on the request/petition form;
   b. An English language translation of the JPO Office action from (5)(a)(i)-(ii) above
   c. A statement that the English translation is accurate;
6. Applicant must submit:
   a. An IDS listing the documents cited by the JPO examiner in the JPO office action (unless already submitted in this application)
   b. Copies of the documents except U.S. patents or U.S. patent application publications (unless already submitted in this application);

The request to participate in the PPH pilot program and petition comply with the above requirements. Accordingly, the above-identified application has been accorded "special" status.

Inquiries concerning this decision should be directed to Terri Johnson at 571-272-2991.

All other inquiries concerning the examination or status of the application is accessible in the PAIR system at http://www.uspto.gov/ebc.index.html.

This application will be forwarded to the examiner for action on the merits commensurate with this decision once the formalities review has been completed.

David Bucci
Petitions Examiner
Office of Petitions

UNITED STATES PATENT AND TRADEMARK OFFICE

Commissioner for Patents
United States Patent and Trademark Office
P.O. Box 1450
Alexandria, VA 22313-1450
www.uspto.gov

MILES & STOCKBRIDGE PC
1751 PINNACLE DRIVE
SUITE 500
MCLEAN VA 22102-3833

MAILED
JAN 18 2012
OFFICE OF PETITIONS

In re Application of
SAEN, et al
Application No.: 13/148,993
Filed: August 11, 2011
Attorney Docket No.: XA-11970/T3381-18552US01
For: SEMICONDUCTOR DEVICE

: DECISION ON REQUEST TO
: PARTICIPATE IN THE PATENT
: PROSECUTION HIGHWAY
: PROGRAM AND PETITION
: TO MAKE SPECIAL UNDER
: 37 CFR 1.102(a)

This is a decision on the request to participate in the PCT Patent Prosecution Highway (PCT-PPH) pilot program and the petition under 37 CFR 1.102(a), filed on November 22, 2011 to make the above-identified application special.

The request and petition are **GRANTED**.

Discussion

A grantable request to participate in the PCT-PPH pilot program and petition to make special require:

(1) The U.S. application must have an eligible relationship to one or more PCT applications where the ISA or IPEA are the JPO, EPO, KIPO, NPI, NBPR, China, or USPTO;

(2) At least one claim in the PCT application has novelty, inventive step, and industrial applicability and must be free of any observations in Box VIII in the latest work product in the international stage or applicant must identify and explain why the claim(s) is/are not subject to the observation in Box VIII;

(3) Applicant must submit a copy of the claim(s) from the PCT application(s) that have novelty, inventive step, and industrial applicability along with an English translation thereof and a statement that the English translation is accurate, if the claims are not in the English language;

(4) All the claims in the U.S. application must sufficiently correspond or be amended to sufficiently correspond to the claim(s) that have novelty, inventive step, and industrial applicability in the PCT application(s);

(5) Examination of the U.S. application has not begun;

(6) Applicant must submit a copy of the latest international work product from the PCT application indicating that the claim(s) have novelty, inventive step, and industrial applicability along with an English translation thereof and a statement that the English translation is accurate if the latest international work product is not in the English language;

(7) Applicant must submit an IDS listing the documents cited by the PCT examiner in the international work product along with copies of documents except U.S. patents or U.S. patent application publications.

The request to participate in the PCT-PPH pilot program and petition comply with the above requirements. Accordingly, the above-identified application has been accorded "special" status.

Telephone inquiries concerning this decision should be directed to Diane Goodwyn at (571) 272-6735.

All other inquiries concerning the examination or status of the application is accessible in the PAIR system at http://www.uspto.gov/ebc.index.html.

This application will be forwarded to the examiner for action on the merits commensurate with this decision upon completion of pre-examination.

David Bucci
Petitions Examiner
Office of Petitions

PTO/SB/20PCT-JP (05-10)
Approved for use through 01/31/2012. OMB 0651-0058
U.S. Patent and Trademark Office; U. S. DEPARTMENT OF COMMERCE
Under the Paperwork Reduction Act of 1995, no persons are required to respond to a collection of information unless it displays a valid OMB control number.

REQUEST FOR PARTICIPATION IN THE PATENT COOPERATION TREATY - PATENT PROSECUTION HIGHWAY (PCT-PPH) PILOT PROGRAM BETWEEN THE JAPAN PATENT OFFICE (JPO) AND THE USPTO

Application No:	13/148,998	Filing date:	August 11, 2011
First Named Inventor:	Fumihiko Kamizono		
Title of the Invention:	Surveying System and Laser Reference Plane Smoothing Method in Surveying System		

THIS REQUEST FOR PARTICIPATION IN THE PCT-PPH PILOT PROGRAM ALONG WITH THE REQUIRED DOCUMENTS MUST BE SUBMITTED VIA EFS-WEB. INFORMATION REGARDING EFS-WEB IS AVAILABLE AT HTTP://WWW.USPTO.GOV/EBC/EFS_HELP.HTML

APPLICANT HEREBY REQUESTS PARTICIPATION IN THE PCT-PPH PROGRAM AND PETITIONS TO MAKE THE ABOVE-IDENTIFIED APPLICATION SPECIAL UNDER THE PCT-PPH PROGRAM.

The above-identified application is (1) a national stage entry of the corresponding PCT application, or (2) a national stage entry of another PCT application which claims priority to the corresponding PCT application, or (3) a national application that claims domestic/ foreign priority to the corresponding PCT application, or (4) a national application which forms the basis for the priority claim in the corresponding PCT application, or (5) a continuing application of a U.S. application that satisfies one of (1) to (4) above, or (6) a U.S. application that claims domestic benefit to a U.S. provisional application which forms the basis for the priority claim in the corresponding PCT application.

The corresponding PCT application number(s) is/are: PCT/JP2011/059458

The international date of the corresponding PCT application(s) is/are: April 11, 2011

I. List of Required Documents:

a. **A copy of the latest international work product (WO/ISA, WO/IPEA, or IPER) in the above–identified corresponding PCT application(s)**

☑ Is attached.

☐ Is not attached because the document is already in the U.S. application.

b. **A copy of all claims which were indicated as having novelty, inventive step and industrial applicability in the above-identified corresponding PCT application(s).**

☑ Is attached.

☐ Is not attached because the document is already in the U.S. application.

c. **English translations of the documents in a. and b. above are attached (if the documents are not in the English language). A statement that the English translation is accurate is attached for the document in b. above.**

This collection of information is required by 35 U.S.C. 119, 37 CFR 1.55, and 37 CFR 1.102(d). The information is required to obtain or retain a benefit by the public, which is to file (and by the USPTO to process) an application. Confidentiality is governed by 35 U.S.C. 122 and 37 CFR 1.11 and 1.14. This collection is estimated to take 2 hours to complete, including gathering, preparing, and submitting the completed application form to the USPTO. Time will vary depending upon the individual case. Any comments on the amount of time you require to complete this form and/or suggestions for reducing this burden should be sent to the Chief Information Officer, U.S. Patent and Trademark Office, U.S. Department of Commerce, P.O. Box 1450, Alexandria, VA 22313-1450. DO NOT SEND FEES OR COMPLETED FORMS TO THIS ADDRESS.

Approved for use through 01/31/2012. OMB 0651-0058
U.S.Patent and Trademark Office; U.S. DEPARTMENT OF COMMERCE

Under the Paperwork Reduction Act of 1995, no persons are required to respond to a collection of information unless it displays a valid OMB control number.

REQUEST FOR PARTICIPATION IN THE PCT-PPH PILOT PROGRAM BETWEEN THE JPO AND THE USPTO

(continued)

Application No.:	13/148,998
First Named Inventor:	Fumihiko Kamizono

d. **(1) An information disclosure statement listing the documents cited in the international work products (ISR, WO/ISA, WO/IPEA, IPER) of the corresponding PCT application.**

- [x] Is attached
- [ ] Has already been filed in the above-identified U.S. application on _____

(2) Copies of all documents (except) for U.S. patents or U.S. patent application publications)

- [x] Are attached.
- [ ] Have already been filed in the above-identified U.S. application on _____

II. Claims Correspondence Table:

Claims in US Application	Patentable Claims in the corresponding PCT Application	Explanation regarding the correspondence
1-8	1-8	translated versions of original PCT claims - same claim/scope

III. All the claims in the US application sufficiently correspond to the patentable claims in the corresponding PCT application.

Signature	/Robert Frame, Reg. No. 54,104/	Date	September 23, 2011
Name (Print/Typed)	Robert Frame	Registration Number	54,104

Privacy Act Statement

The **Privacy Act of 1974 (P.L. 93-579)** requires that you be given certain information in connection with your submission of the attached form related to a patent application or patent. Accordingly, pursuant to the requirements of the Act, please be advised that: (1) the general authority for the collection of this information is 35 U.S.C. 2(b)(2); (2) furnishing of the information solicited is voluntary; and (3) the principal purpose for which the information is used by the U.S. Patent and Trademark Office is to process and/or examine your submission related to a patent application or patent. If you do not furnish the requested information, the U.S. Patent and Trademark Office may not be able to process and/or examine your submission, which may result in termination of proceedings or abandonment of the application or expiration of the patent.

The information provided by you in this form will be subject to the following routine uses:

1. The information on this form will be treated confidentially to the extent allowed under the Freedom of Information Act (5 U.S.C. 552) and the Privacy Act (5 U.S.C 552a). Records from this system of records may be disclosed to the Department of Justice to determine whether disclosure of these records is required by the Freedom of Information Act.
2. A record from this system of records may be disclosed, as a routine use, in the course of presenting evidence to a court, magistrate, or administrative tribunal, including disclosures to opposing counsel in the course of settlement negotiations.
3. A record in this system of records may be disclosed, as a routine use, to a Member of Congress submitting a request involving an individual, to whom the record pertains, when the individual has requested assistance from the Member with respect to the subject matter of the record.
4. A record in this system of records may be disclosed, as a routine use, to a contractor of the Agency having need for the information in order to perform a contract. Recipients of information shall be required to comply with the requirements of the Privacy Act of 1974, as amended, pursuant to 5 U.S.C. 552a(m).
5. A record related to an International Application filed under the Patent Cooperation Treaty in this system of records may be disclosed, as a routine use, to the International Bureau of the World Intellectual Property Organization, pursuant to the Patent Cooperation Treaty.
6. A record in this system of records may be disclosed, as a routine use, to another federal agency for purposes of National Security review (35 U.S.C. 181) and for review pursuant to the Atomic Energy Act (42 U.S.C. 218(c)).
7. A record from this system of records may be disclosed, as a routine use, to the Administrator, General Services, or his/her designee, during an inspection of records conducted by GSA as part of that agency's responsibility to recommend improvements in records management practices and programs, under authority of 44 U.S.C. 2904 and 2906. Such disclosure shall be made in accordance with the GSA regulations governing inspection of records for this purpose, and any other relevant (*i.e.*, GSA or Commerce) directive. Such disclosure shall not be used to make determinations about individuals.
8. A record from this system of records may be disclosed, as a routine use, to the public after either publication of the application pursuant to 35 U.S.C. 122(b) or issuance of a patent pursuant to 35 U.S.C. 151. Further, a record may be disclosed, subject to the limitations of 37 CFR 1.14, as a routine use, to the public if the record was filed in an application which became abandoned or in which the proceedings were terminated and which application is referenced by either a published application, an application open to public inspection or an issued patent.
9. A record from this system of records may be disclosed, as a routine use, to a Federal, State, or local law enforcement agency, if the USPTO becomes aware of a violation or potential violation of law or regulation.

PATENT COOPERATION TREATY

PCT

INTERNATIONAL SEARCH REPORT

(PCT Article 18 and Rules 43 and 44)

Applicant's or agent's file reference 226PCT	FOR FURTHER ACTION	see Form PCT/ISA/220 as well as, where applicable, item 5 below.
International application No. PCT/JP2011/059458	International filing date (day/month/year) 11/04/2011	(Earliest) Priority Date (day/month/year) 15/04/2010
Applicant Kabushiki Kaisha TOPCON		

This international search report has been prepared by this International Searching Authority and is transmitted to the applicant according to Article 18. A copy is being transmitted to the International Bureau.

This international search report consists of a total of 2 sheets.

☐ It is also accompanied by a copy of each prior art document cited in this report.

1. **Basis of the report**

a. With regard to the **language**, the international search was carried out on the basis of:

☒ the international application in the language in which it was filed.

☐ a translation of the international application into ..... which is the language of a translation furnished for the purposes of international search (Rules 12.3(a) and 23.1(b)).

b. ☐ This international search report has been established taking into account the **rectification of an obvious mistake** authorized by or notified to this Authority under Rule 91 (Rule 43.6bis(a)).

c. ☐ With regard to any **nucleotide and/or amino acid sequence** disclosed in the international application, see Box No. I.

2. ☐ **Certain claims were found unsearchable** (see Box No. II).

3. ☐ **Unity of invention is lacking** (see Box No. III).

4. With regard to the **title**,

☒ the text is approved as submitted by the applicant.

☐ the text has been established by this Authority to read as follows:

5. With regard to the **abstract**,

☒ the text is approved as submitted by the applicant.

☐ the text has been established, according to Rule 38.2, by this Authority as it appears in Box No. IV. The applicant may, within one month from the date of mailing of this international search report, submit comments to this Authority.

6. With regard to the **drawings**,

a. the figure of the **drawings** to be published with the abstract is Figure No. 1

☒ as suggested by the applicant.

☐ as selected by this Authority, because the applicant failed to suggest a figure.

☐ as selected by this Authority, because this figure better characterizes the invention.

b. ☐ none of the figures is to be published with the abstract.

INTERNATIONAL SEARCH REPORT

International application No.
PCT/JP2011/059458

A. CLASSIFICATION OF SUBJECT MATTER

Int.Cl. G01C15/00 (2006.01)i

According to International Patent Classification (IPC) or to both national classification and IPC

B. FIELDS SEARCHED

Minimum documentation searched (classification system followed by classification symbols)

Int.Cl. G01C15/00, E02F9/20, E02F3/85

Documentation searched other than minimum documentation to the extent that such documents are included in the fields searched

Japanese Utility Model application publication: 1922-1996, 1971-2011
Japanese Utility Model registration bulletin: 1996-2011, 1994-2011

Electronic data base consulted during the international search (name of data base and, where practicable, search terms used)

C. DOCUMENTS CONSIDERED TO BE RELEVANT

Category*	Citation of document, with indication, where appropriate, of the relevant passages	Relevant to claim No.
A	JP 2001-208541 A (Kabushiki Kaisha TOPCON) August 3, 2001, All pages, All drawings (No patent family)	1-8
A	JP 2001-255146 A (Kabushiki Kaisha TOPCON) September 21, 2001, All pages, All drawings & US 2001/0023766 A1	1-8

☐ Further documents are listed in the continuation of Box C. ☐ See patent family annex.

* Special categories of cited documents:

"A" document defining the general state of the art which is not considered to be of particular relevance

"E" earlier application or patent but published on or after the international filing date

"L" document which may throw doubts on priority claim(s) or which is cited to establish the publication date of another citation or other special reason (as specified)

"O" document referring to an oral disclosure, use, exhibition or other means

"P" document published prior to the international filing date but later than the priority date claimed

"T" later document published after the international filing date or priority date and not in conflict with the application but cited to understand the principle or theory underlying the invention

"X" document of particular relevance; the claimed invention cannot be considered novel or cannot be considered to involve an inventive step when the document is taken alone

"Y" document of particular relevance; the claimed invention cannot be considered to involve an inventive step when the document is combined with one or more other such documents, such combination being obvious to a person skilled in the art

"&" document member of the same patent family

Date of the actual completion of the international search	Date of mailing of the international search report
09/05/2011	24/05/2011
Name and mailing address of the ISA/ Japan Patent Office (ISA/JP) 4-3, Kasumigaseki 3-chome, Chiyoda-ku Tokyo, 100-8915, JAPAN Facsimile No.	Authorized officer Shingo Ushida 2S 3100 Telephone No. 03-3581-1101 (Extension 3258)

Form PCT/ISA/210 (second sheet) (July 2009)

PATENT COOPERATION TREATY

From the INTERNATIONAL SEARCHING AUTHORITY

To:
Shoji MIYOSHI

6th Floor, Ohshimaya Bldg.
22-5, Hachobori 2-chome
Chuo-ku, Tokyo, 104-0032 JAPAN

PCT

NOTIFICATION OF TRANSMITTAL OF THE INTERNATIONAL SEARCH REPORT AND THE WRITTEN OPINION OF THE INTERNATIONAL SEARCHING AUTHORITY, OR THE DECLARATION

(PCT Rule 44.1)

	Date of mailing (day/month/year) 24/05/2011
Applicant's or agent's file reference 226PCT	**FOR FURTHER ACTION** See paragraphs 1 and 4 below
International application No. PCT/JP2011/050458	International filing date (day/month/year) 11/04/2011
Applicant Kabushiki kaisha TOPCON	

1. [X] The applicant is hereby notified that the international search report and the written opinion of the International Searching Authority have been established and are transmitted herewith.

   Filing of amendments and statement under Article 19:
   The applicant is entitled, if he so wishes, to amend the claims of the international application (see Rule 46):

   When? The time limit for filing such amendments is normally two months from the date of transmittal of the international search report.

   Where? Directly to the International Bureau of WIPO, 34 chemin des Colombettes, 1211 Geneva 20, Switzerland, Facsimile No.: +41 22 338 82 70

   For more detailed instructions, see the notes on the accompanying sheet.

2. [ ] The applicant is hereby notified that no international search report will be established and that the declaration under Article 17(2)(a) to that effect and the written opinion of the International Searching Authority are transmitted herewith.

3. [ ] **With regard to any protest** against payment of (an) additional fee(s) under Rule 40.2, the applicant is notified that:

   [ ] the protest together with the decision thereon has been transmitted to the International Bureau together with the applicant's request to forward the texts of both the protest and the decision thereon to the designated Offices,

   [ ] no decision has been made yet on the protest; the applicant will be notified as soon as a decision is made.

4. **Reminders**

   Shortly after the expiration of **18 months** from the priority date, the international application will be published by the International Bureau. If the applicant wishes to avoid or postpone publication, a notice of withdrawal of the international application, or of the priority claim, must reach the International Bureau as provided in Rules 90*bis*.1 and 90*bis*.3, respectively, before the completion of the technical preparations for international publication.

   The applicant may submit comments on an informal basis on the written opinion of the International Searching Authority to the International Bureau. The International Bureau will send a copy of such comments to all designated Offices unless an international preliminary examination report has been or is to be established. These comments would also be made available to the public but not before the expiration of 30 months from the priority date.

   Within **19 months** from the priority date, but only in respect of some designated Offices, a demand for international preliminary examination must be filed if the applicant wishes to postpone the entry into the national phase **until 30 months** from the priority date (in some Offices even later); otherwise, the applicant must, **within 20 months** from the priority date, perform the prescribed acts for entry into the national phase before those designated Offices.

   In respect of other designated Offices, the time limit of **30 months** (or later) will apply even if no demand is filed within 19 months.

   See the Annex to Form PCT/ISA/701 and, for details about the applicable time limits, Office by Office, see the *PCT Applicant's Guide*, National Chapter.

Name and mailing address of the ISA/ Japan Patent Office (ISA/JP) 4-3, Kasumigaseki 3-chome, Chiyoda-ku, Tokyo, 100-8915 JAPAN Facsimile No.	Authorized officer: Comissioner of Japan Patent Office 2S 3100 Telephone No. 03-3581-1101 (Extension 3258)

NOTES TO FORM PCT/ISA/220

These Notes are intended to give the basic instructions concerning the filing of amendments under Article 19. The Notes are based on the requirements of the Patent Cooperation Treaty, the Regulations and the Administrative Instructions under that Treaty. In case of discrepancy between these Notes and those requirements, the latter are applicable. For more detailed information, see also the *PCT Applicant's Guide*.

In these Notes, "Article," "Rule" and "Section" refer to the provisions of the PCT, the PCT Regulations and the PCT Administrative Instructions, respectively.

INSTRUCTIONS CONCERNING AMENDMENTS UNDER ARTICLE 19

The applicant has, after having received the international search report and the written opinion of the International Searching Authority, one opportunity to amend the claims of the international application. It should however be emphasized that, since all parts of the international application (claims, description and drawings) may be amended during the international preliminary examination procedure, there is usually no need to file amendments of the claims under Article 19 except where, e.g. the applicant wants the latter to be published for the purposes of provisional protection or has another reason for amending the claims before international publication. Furthermore, it should be emphasized that provisional protection is available in some States only (see *PCT Applicant's Guide*, Annex B).

The attention of the applicant is drawn to the fact that amendments to the claims under Article 19 are not allowed where the International Searching Authority has declared, under Article 17(2), that no international search report would be established (see *PCT Applicant's Guide*, International Phase, paragraph 296).

What parts of the international application may be amended?

Under Article 19, only the claims may be amended.

During the international phase, the claims may also be amended (or further amended) under Article 34 before the International Preliminary Examining Authority. The description and drawings may only be amended under Article 34 before the International Preliminary Examining Authority.

Upon entry into the national phase, all parts of the international application may be amended under Article 28 or, where applicable, Article 41.

When? Within 2 months from the date of transmittal of the international search report or 16 months from the priority date, whichever time limit expires later. It should be noted, however, that the amendments will be considered as having been received on time if they are received by the International Bureau after the expiration of the applicable time limit but before the completion of the technical preparations for international publication (Rule 46.1).

Where not to file the amendments?

The amendments may only be filed with the International Bureau and not with the receiving Office or the International Searching Authority (Rule 46.2).

Where a demand for international preliminary examination has been/is filed, see below.

How? Either by cancelling one or more entire claims, by adding one or more new claims or by amending the text of one or more of the claims as filed.

A replacement sheet or sheets containing a complete set of claims in replacement of all the claims previously filed must be submitted.

Where a claim is cancelled, no renumbering of the other claims is required. In all cases where claims are renumbered, they must be renumbered consecutively in Arabic numerals (Section 205(a)).

The amendments must be made in the language in which the international application is to be published.

What documents must/may accompany the amendments?

Letter (Section 205(b)):

The amendments must be submitted with a letter.

The letter will not be published with the international application and the amended claims. It should not be confused with the "Statement under Article 19(1)" (see below, under "Statement under Article 19(1)").

The letter must be in English or French, at the choice of the applicant. However, if the language of the international application is English, the letter must be in English; if the language of the international application is French, the letter must be in French.

NOTES TO FORM PCT/ISA/220 (continued)

The letter must indicate the differences between the claims as filed and the claims as amended. It must, in particular, indicate, in connection with each claim appearing in the international application (it being understood that identical indications concerning several claims may be grouped), whether

(i) the claim is unchanged;

(ii) the claim is cancelled;

(iii) the claim is new;

(iv) the claim replaces one or more claims as filed;

(v) the claim is the result of the division of a claim as filed.

The following examples illustrate the manner in which amendments must be explained in the accompanying letter:

1. [Where originally there were 48 claims and after amendment of some claims there are 51]:
   "Claims 1 to 29, 31, 32, 34, 35, 37 to 48 replaced by amended claims bearing the same numbers; claims 30, 33 and 36 unchanged; new claims 49 to 51 added."
2. [Where originally there were 15 claims and after amendment of all claims there are 11]:
   "Claims 1 to 15 replaced by amended claims 1 to 11."
3. [Where originally there were 14 claims and the amendments consist in cancelling some claims and in adding new claims]:
   "Claims 1 to 6 and 14 unchanged; claims 7 to 13 cancelled; new claims 15, 16 and 17 added." or
   "Claims 7 to 13 cancelled; new claims 15, 16 and 17 added; all other claims unchanged."
4. [Where various kinds of amendments are made]:
   "Claims 1-10 unchanged; claims 11 to 13, 18 and 19 cancelled; claims 14, 15 and 16 replaced by amended claim 14; claim 17 subdivided into amended claims 15, 16 and 17; new claims 20 and 21 added."

"Statement under Article 19(1)" (Rule 46.4)

The amendments may be accompanied by a statement explaining the amendments and indicating any impact that such amendments might have on the description and the drawings (which cannot be amended under Article 19(1)).

The statement will be published with the international application and the amended claims.

It must be in the language in which the international application is to be published.

It must be brief, not exceeding 500 words if in English or if translated into English.

It should not be confused with and does not replace the letter indicating the differences between the claims as filed and as amended. It must be filed on a separate sheet and must be identified as such by a heading, preferably by using the words "Statement under Article 19(1)."

It may not contain any disparaging comments on the international search report or the relevance of citations contained in that report. Reference to citations, relevant to a given claim, contained in the international search report may be made only in connection with an amendment of that claim.

Consequence if a demand for international preliminary examination has already been filed

If, at the time of filing any amendments and any accompanying statement, under Article 19, a demand for international preliminary examination has already been submitted, the applicant must preferably, at the time of filing the amendments (and any statement) with the International Bureau, also file with the International Preliminary Examining Authority a copy of such amendments (and of any statement) and, where required, a translation of such amendments for the procedure before that Authority (see Rules 55.3(a) and 62.2, first sentence). For further information, see the Notes to the demand form (PCT/IPEA/401).

If a demand for international preliminary examination is made, the written opinion of the International Searching Authority will, except in certain cases where the International Preliminary Examining Authority did not act as International Searching Authority and where it has notified the International Bureau under Rule 66.1*bis*(b), be considered to be a written opinion of the International Preliminary Examining Authority. If a demand is made, the applicant may submit to the International Preliminary Examining Authority a reply to the written opinion together, where appropriate, with amendments before the expiration of 3 months from the date of mailing of Form PCT/ISA/220 or before the expiration of 22 months from the priority date, whichever expires later (Rule 43*bis*.1(c)).

Consequence with regard to translation of the international application for entry into the national phase

The applicant's attention is drawn to the fact that, upon entry into the national phase, a translation of the claims as amended under Article 19 may have to be furnished to the designated/elected Offices, instead of, or in addition to, the translation of the claims as filed.

For further details on the requirements of each designated/elected Office, see the *PCT Applicant's Guide*, National Chapters.

PATENT COOPERATION TREATY

From the
INTERNATIONAL SEARCHING AUTHORITY

To:
Shoji MIYOSHI

6th Floor, Ohshimaya Bldg.
22-5, Hachobori 2-chome,
Chuo-ku, Tokyo 104-0032 JAPAN

PCT

WRITTEN OPINION OF THE
INTERNATIONAL SEARCHING AUTHORITY

(PCT Rule 43*bis*.1)

Date of mailing (*day/month/year*) 24/05/2011

Applicant's or agent's file reference 226PCT

FOR FURTHER ACTION
See paragraph 2 below

International application No.	International filing date (*day/month/year*)	Priority date (*day/month/year*)
PCT/JP2011/059458	11/04/2011	15/04/2010

International Patent Classification (IPC) or both national classification and IPC
Int.Cl. G01C15/00 (2006.01) i

Applicant
Kabushiki Kaisha TOPCON

1. This opinion contains indications relating to the following items:

- [X] Box No. I Basis of the opinion
- [ ] Box No. II Priority
- [ ] Box No. III Non-establishment of opinion with regard to novelty, inventive step and industrial applicability
- [ ] Box No. IV Lack of unity of invention
- [X] Box No. V Reasoned statement under Rule 43*bis*.1(a)(i) with regard to novelty, inventive step and industrial applicability; citations and explanations supporting such statement
- [ ] Box No. VI Certain documents cited
- [ ] Box No. VII Certain defects in the international application
- [ ] Box No. VIII Certain observations on the international application

2. FURTHER ACTION

If a demand for international preliminary examination is made, this opinion will be considered to be a written opinion of the International Preliminary Examining Authority ("IPEA") except that this does not apply where the applicant chooses an Authority other than this one to be the IPEA and the chosen IPEA has notified the International Bureau under Rule 66.1*bis*(b) that written opinions of this International Searching Authority will not be so considered.

If this opinion is, as provided above, considered to be a written opinion of the IPEA, the applicant is invited to submit to the IPEA a written reply together, where appropriate, with amendments, before the expiration of 3 months from the date of mailing of Form PCT/ISA/220 or before the expiration of 22 months from the priority date, whichever expires later.

For further options, see Form PCT/ISA/220.

3. For further details, see notes to Form PCT/ISA/220.

Name and mailing address of the ISA/	Date of completion of this opinion	Authorized officer
JPO(ISA/JP) 4-3, Kasumiga-seki 3-chome, Chiyoda-ku, Tokyo, 100-8915	09/05/2011	Shingo Uehida 2S 3100
Facsimile No.		Telephone No. 03-3581-1101 (Extension 3258)

WRITTEN OPINION OF THE
INTERNATIONAL SEARCHING AUTHORITY

International application No.
PCT/JP2011/059458

Box No. I Basis of this opinion

1. With regard to the **language**, this opinion has been established on the basis of:

   [X] the international application in the language in which it was filed.

   [ ] a translation of the international application into _____ which is the language of a translation furnished for the purposes of international search (Rules 12.3(a) and 23.1(b)).

2. [ ] This opinion has been established taking into account the **rectification of an obvious mistake** authorized by or notified to this Authority under Rule 91 (Rule 43*bis*.1(a)).

3. With regard to any **nucleotide and/or amino acid sequence** disclosed in the international application, this opinion has been established on the basis of a sequence listing filed or furnished:

   a. (means)

   [ ] on paper

   [ ] in electronic form

   b. (time)

   [ ] in the international application as filed

   [ ] together with the international application in electronic form

   [ ] subsequently to this Authority for the purposes of search

4. [ ] In addition, in the case that more than one version or copy of a sequence listing has been filed or furnished, the required statements that the information in the subsequent or additional copies is identical to that in the application as filed or does not go beyond the application as filed, as appropriate, were furnished.

5. Additional comments:

WRITTEN OPINION OF THE
INTERNATIONAL SEARCHING AUTHORITY

International application No.
PCT/JP2011/059458

Box No. V Reasoned statement under Rule 43bis.1(a)(i) with regard to novelty, inventive step and industrial applicability; citations and explanations supporting such statement

1. Statement

Novelty (N)	Claims	1-8	YES
	Claims		NO
Inventive step (IS)	Claims	1-8	YES
	Claims		NO
Industrial applicability (IA)	Claims	1-8	YES
	Claims		NO

2. Citations and explanations:

The invention according to claims 1-8 is not described in any of the citations cited in the International Search Report and is not obvious for a person ordinarily skilled in the art.

Doc Code: PET.GREEN
Document Description: Petition for Green Tech Pilot

PTO/SB/420 (03-11)

PETITION TO MAKE SPECIAL UNDER THE GREEN TECHNOLOGY PILOT PROGRAM

Attorney Docket Number: 247418 -1	Application Number (if known): 13/149100	Filing date: May 31, 2011

First Named Inventor: Scott Feldman-Peabody

Title: SIMULTANEOUS QE SCANNING SYSTEM AND METHODS FOR PHOTOVOLTAIC DEVICES

APPLICANT HEREBY REQUESTS TO PARTICIPATE IN THE GREEN TECHNOLOGY PILOT PROGRAM FOR THE ABOVE-IDENTIFIED APPLICATION. See Instruction Sheet on page 2.

This petition must be timely filed electronically using the USPTO electronic filing system, EFS-Web.

1. By filing this petition:

   Applicant is requesting early publication: Applicant hereby requests early publication under 37 CFR 1.219 and the publication fee set forth in 37 CFR 1.18(d) accompanies this request.

2. By filing this petition: applicant is agreeing to make an election without traverse in a telephonic interview and elect an invention that meets the eligibility requirements for the Green Technology Pilot Program, if the Office determines that the claims are not obviously directed to a single invention. See Instruction Sheet.

3. This request is accompanied by statements of special status for the eligibility requirement.

4. The application contains no more than three (3) independent claims and twenty (20) total claims.

5. The application does not contain any multiple dependent claims.

6. Other attachments: Statement Concerning the Basis for the Special Status

Signature /Allison W. Mages/	Date 10/31/11
Name (Print/Typed) Allison W. Mages	Registration Number 57,275

Note: Signatures of all the inventors or assignees of record of the entire interest or their representative(s) are required in accordance with 37 CFR 1.33 and 11.18. Please see 37 CFR 1.4(d) for the form of the signature. If necessary, submit multiple forms for more than one signature, see below.*

☐ *Total of _____ forms are submitted.

If you need assistance in completing the form, call 1-800-PTO-9199 and select option 2.

IN THE UNITED STATES PATENT AND TRADEMARK OFFICE

First Named Inventor: Scott Feldman-Peabody	)
Confirmation No.: 1796	)
	)
Serial No.: 13/149,100	)
	)
Filing Date: May 31, 2011	)
	)
Atty Docket No.: 247418-1	)

VIA EFS
Commissioner for Patents
P.O. Box 1450
Alexandria, VA 22313-1450

Statement Concerning the Basis for the Special Status

SIR:

The application relates generally to the field of quantum efficiency measuring of photovoltaic devices. More particularly, the subject matter is related to methods and apparatus for simultaneously measuring the quantum efficiency of a photovoltaic (PV) cell at different points within the cell. (See [0001])

Applicant respectfully submits that Special Status is sought on the basis that the present invention materially contributes to the discovery or development of renewable energy resources.

The undersigned representative may be contacted at the number below to facilitate the resolution of any matters. Please charge any fees that are incurred in connection with this Statement to deposit account no. 09-0470.

Respectfully submitted,

General Electric Company

By : /Allison W. Mages/
Allison W. Mages
Reg. No. 57,275

Dated: October 31, 2011

GE Global Patent Operation
2 Corporate Drive, Suite 648
Shelton, CT 06484
203-944-6730

UNITED STATES PATENT AND TRADEMARK OFFICE

UNITED STATES DEPARTMENT OF COMMERCE
United States Patent and Trademark Office
Address: COMMISSIONER FOR PATENTS
P.O. Box 1450
Alexandria, Virginia 22313-1450
www.uspto.gov

APPLICATION NO.	FILING DATE	FIRST NAMED INVENTOR	ATTORNEY DOCKET NO.	CONFIRMATION NO.
13/149,100	05/31/2011	Scott Daniel Feldman-Peabody	247418/PRSS-62	1796

93081 7590 11/17/2011
Dority & Manning, P.A. and Primestar Solar Inc.
Post Office Box 1449
Greenville, SC 29602

EXAMINER
PHAN, HUY Q

ART UNIT	PAPER NUMBER
2858	

MAIL DATE	DELIVERY MODE
11/17/2011	PAPER

Please find below and/or attached an Office communication concerning this application or proceeding.

The time period for reply, if any, is set in the attached communication.

UNITED STATES PATENT AND TRADEMARK OFFICE

Commissioner for Patents
United States Patent and Trademark Office
P.O. Box 1450
Alexandria, VA 22313-1450
www.uspto.gov

Dority & Manning, P.A. and Primestar Solar Inc.
Post Office Box 1449
Greenville SC 29602

NOV 17 2011

In re Application of	:	
FELDMAN-PEABODY, Scott Daniel	:	DECISION ON PETITION
Application No. 13/149,100	:	TO MAKE SPECIAL UNDER
Filed: May 31, 2011	:	THE GREEN TECHNOLOGY
Attorney Docket No. 247418/PRSS-62	:	PILOT PROGRAM

This is a decision on the petition under 37 CFR 1.102, filed on October 31, 2011 to make the above-identified application special under the pilot program for applications pertaining to Green Technologies as set forth 74 Federal Register Notice 64666 (December 8, 2009) and amended by 75 Federal Register Notice 28554 (May 21, 2010) and 75 Federal Register Notice 69049 (November 10, 2010).

The petition is **GRANTED**.

A grantable petition to make an application special under 37 CFR 1.102 and the pilot program as set forth in 74 FR 64666 must be directed to a nonprovisional application filed under 35 USC 111(a) or be a national stage entry under 35 USC 371, exclusive of any reissue applications.

In order to qualify for special status, the following requirements must be met. 1) The application must have no more than 3 independent claims and no more than 20 total claims. 2) The application must not contain any multiple dependent claims. 3) The petition must state the basis for seeking special status, i.e., the claimed invention either: A) materially enhances the quality of the environment or B) materially contributes to: i) the discovery or development of renewable energy resources, ii) the more efficient utilization and conservation of energy resources, or iii) greenhouse gas emission reduction. 4) If the disclosure is not clear on its face that the claimed invention materially contributes under category (A) or (B), the petition must be accompanied by a statement by the applicant, assignee, or an attorney/agent registered to practice before the Office explaining how the materiality standard is met. 5) A statement that applicant will agree to make an election without traverse in a telephonic interview if a restriction requirement is made by the examiner. 6) The petition to make special must be filed electronically. 7) The petition must be filed at least one day prior to the date that a first Office Action appears in the Patent Application Information Retrieval (PAIR) system. 8) The petition must be accompanied by a request for early publication in compliance with 37 CFR 1.219 and include the publication fee as set forth in 37 CFR 1.18(d).

The requirement for a fee for consideration of the petition to make special for applications pertaining to Green Technologies has been waived.

The instant petition complies with items 1 – 8 above. Accordingly, the above-identified application has been accorded "special" status.

Telephone inquires concerning this decision should be directed to Colleen Dunn at 571-272-1170.

The application is being forwarded to the appropriate Technology Center Art Unit for action on the merits commensurate with this decision.

/Colleen Dunn/

Colleen Dunn
Quality Assurance Specialist
Technology Center 2800

UNITED STATES PATENT AND TRADEMARK OFFICE

Commissioner for Patents
United States Patent and Trademark Office
P.O. Box 1450
Alexandria, VA 22313-1450
www.uspto.gov

MAILED
JUN 10 2011
OFFICE OF PETITIONS

CALFEE, HALTER & GRISWOLD LLP
800 SUPERIOR AVE E
SUITE 1400
CLEVELAND OH 44114

In re Application of	:	
COLLIER, Robert P.	:	
Application No. 13/149,144	:	DECISION ON PETITION
Effective Date: March 31, 2011	:	TO MAKE SPECIAL UNDER
Attorney Docket No. **27544/04008**	:	37 CFR 1.102(c)(1)
	:	

This is a decision on the petition under 37 CFR 1.102(c)(1), filed May 31, 2011, to make the above-identified application special based on applicant's age as set forth in M.P.E.P. § 708.02, Section IV.

The petition is **GRANTED**.

A grantable petition to make an application special under 37 CFR 1.102(c)(1) and MPEP § 708.02, Section IV: Applicant's Age must be accompanied by evidence showing that at least one of the applicants is 65 years of age, or more, such as a birth certificate or a statement by applicant. No fee is required

The instant petition includes the declaration of inventor Robert Collier, attesting to his age. Accordingly, the above-identified application will be accorded "special" status.

Telephone inquiries concerning this decision should be directed to Tredelle Jackson at 571-272-2783.

All other inquiries concerning either the examination or status of the application should be directed to the Technology Center.

This application is being referred to the Office of Patent Application Processing for processing. This application will be accorded "special" status when pre-examination processing is done.

Tredelle D. Jackson
Paralegal Specialist
Office of Petitions

Doc Code: PET.GREEN
Document Description: Petition for Green Tech Pilot

PTO/SB/420 (03-11)

PETITION TO MAKE SPECIAL UNDER THE GREEN TECHNOLOGY PILOT PROGRAM

Attorney Docket Number: 249081 -1	Application Number (if known): 13/149167	Filing date: May 31, 2011

First Named Inventor: Robert Dwayne Gossman

Title: REFRACTIVE INDEX MATCHING OF THIN FILM LAYERS FOR PHOTOVOLTAIC DEVICES AND METHODS OF THEIR MANUFACTURE

APPLICANT HEREBY REQUESTS TO PARTICIPATE IN THE GREEN TECHNOLOGY PILOT PROGRAM FOR THE ABOVE-IDENTIFIED APPLICATION. See Instruction Sheet on page 2.

This petition must be timely filed electronically using the USPTO electronic filing system, EFS-Web.

1. By filing this petition:

   Applicant is requesting early publication: Applicant hereby requests early publication under 37 CFR 1.219 and the publication fee set forth in 37 CFR 1.18(d) accompanies this request.

2. By filing this petition: applicant is agreeing to make an election without traverse in a telephonic interview and elect an invention that meets the eligibility requirements for the Green Technology Pilot Program, if the Office determines that the claims are not obviously directed to a single invention. See Instruction Sheet.

3. This request is accompanied by statements of special status for the eligibility requirement.

4. The application contains no more than three (3) independent claims and twenty (20) total claims.

5. The application does not contain any multiple dependent claims.

6. Other attachments: Statement Concerning the Basis for the Special Status

Signature /Allison W. Mages/	Date October 21, 2011
Name (Print/Typed) Allison W. Mages	Registration Number 57,275

Note: Signatures of all the inventors or assignees of record of the entire interest or their representative(s) are required in accordance with 37 CFR 1.33 and 11.18. Please see 37 CFR 1.4(d) for the form of the signature. If necessary, submit multiple forms for more than one signature, see below.*

☐ *Total of _____ forms are submitted.

If you need assistance in completing the form, call 1-800-PTO-9199 and select option 2.

IN THE UNITED STATES PATENT AND TRADEMARK OFFICE

First Named Inventor: Robert Dwayne Gossman	)
Confirmation No.: 1916	)
	)
Serial No.: 13/149167	)
	)
Filing Date: May 31, 2011	)
	)
Atty Docket No.: 249081-1	)

VIA EFS
Commissioner for Patents
P.O. Box 1450
Alexandria, VA 22313-1450

Statement Concerning the Basis for the Special Status

SIR:

The application relates generally to refractive index matching thin film layers for use in a photovoltaic device, along with their methods of deposition. More particularly, the subject matter disclosed herein relates to refractive index matching thin film layers for use in cadmium telluride thin film photovoltaic devices and their methods of manufacture. (See [0001])

Applicant respectfully submits that Special Status is sought on the basis that the present invention materially contributes to the discovery or development of renewable energy resources.

The undersigned representative may be contacted at the number below to facilitate the resolution of any matters. Please charge any fees that are incurred in connection with this Statement to deposit account no. 09-0470.

Respectfully submitted,

General Electric Company

By : /Allison W. Mages/
Allison W. Mages
Reg. No. 57,275

Dated: October 21, 2011

GE Global Patent Operation
2 Corporate Drive, Suite 648
Shelton, CT 06484
203-944-6730

UNITED STATES PATENT AND TRADEMARK OFFICE

UNITED STATES DEPARTMENT OF COMMERCE
United States Patent and Trademark Office
Address: COMMISSIONER FOR PATENTS
P.O. Box 1450
Alexandria, Virginia 22313-1450
www.uspto.gov

APPLICATION NO.	FILING DATE	FIRST NAMED INVENTOR	ATTORNEY DOCKET NO.	CONFIRMATION NO.
13/149,167	05/31/2011	Robert Dwayne Gossman	249081/PRSS-71	1916

93081 7590 11/08/2011
Dority & Manning, P.A. and Primestar Solar Inc.
Post Office Box 1449
Greenville, SC 29602

EXAMINER

ART UNIT	PAPER NUMBER
1725	

MAIL DATE	DELIVERY MODE
11/08/2011	PAPER

Please find below and/or attached an Office communication concerning this application or proceeding.

The time period for reply, if any, is set in the attached communication.

UNITED STATES PATENT AND TRADEMARK OFFICE

Commissioner for Patents
United States Patent and Trademark Office
P.O. Box 1450
Alexandria, VA 22313-1450
www.uspto.gov

Dority & Manning, P.A. and Primestar Solar Inc.
Post Office Box 1449
Greenville SC 29602

Nov. 09, 2011

In re Application of	:	
Gossman	:	DECISION ON PETITION
Application No. 13/149,167	:	TO MAKE SPECIAL UNDER
Filed: 5/31/2011	:	THE GREEN TECHNOLOGY
Attorney Docket No. **249081/PRSS-71**	:	PILOT PROGRAM

This is a decision on the petition under 37 CFR 1.102, filed 10/21/2011, to make the above-identified application special under the pilot program for applications pertaining to Green Technologies as set forth in 74 Federal Register Notice 64666 (December 8, 2009) and amended by 75 Federal Register Notice 28554 (May 21, 2010) and 75 Federal Register Notice 69049 (November 10, 2010).

The petition is **GRANTED**.

A grantable petition to make an application special under 37 CFR 1.102 and the pilot program as set forth in 74 FR 64666 must be directed to a nonprovisional application filed under 35 USC 111(a) or be a national stage entry under 35 USC 371, exclusive of any reissue applications.

In order to qualify for special status, the following requirements must be met. 1) The application must have no more than 3 independent claims and no more than 20 total claims. 2) The application must not contain any multiple dependent claims. 3) The petition must state the basis for seeking special status, i.e., the claimed invention either: A) materially enhances the quality of the environment or B) materially contributes to: i) the discovery or development of renewable energy resources, ii) the more efficient utilization and conservation of energy resources, or iii) greenhouse gas emission reduction. 4) If the disclosure is not clear on its face that the claimed invention materially contributes under category (A) or (B), the petition must be accompanied by a statement by the applicant, assignee, or an attorney/agent registered to practice before the Office explaining how the materiality standard is met. 5) A statement that applicant will agree to make an election without traverse in a telephonic interview if a restriction requirement is made by the examiner. 6) The petition to make special must be filed electronically. 7) The petition must be filed at least one day prior to the date that a first Office Action appears in the Patent Application Information Retrieval (PAIR) system. 8) The petition must be accompanied by a request for early publication in compliance with 37 CFR 1.219 and include the publication fee as set forth in 37 CFR 1.18(d).

The requirement for a fee for consideration of the petition to make special for applications pertaining to Green Technologies has been waived.

The instant petition complies with items 1 – 8 above. Accordingly, the above-identified application has been accorded "special" status.

Telephone inquires concerning this decision should be directed to Tom Dunn at 571-272-1171.

The application is being forwarded to the Technology Center Art Unit 1725 for action on the merits commensurate with this decision.

/Tom Dunn/

Tom Dunn
Quality Assurance Specialist
Technology Center 1700

UNITED STATES PATENT AND TRADEMARK OFFICE

Commissioner for Patents
United States Patent and Trademark Office
P.O. Box 1450
Alexandria, VA 22313-1450
www.uspto.gov

THOMPSON HINE L.L.P.
Intellectual Property Group
P.O. BOX 8801
DAYTON OH 45401-8801

MAILED
JUN 15 2011
OFFICE OF PETITIONS

In re Application of	:	
Gholam A. Peyman	:	
Application No. 13/149,209	:	DECISION ON PETITION
Filed: May 31, 2011	:	TO MAKE SPECIAL UNDER
Attorney Docket No. **075200.26**	:	37 CFR 1.102(c)(1)
	:	

This is a decision on the petition under 37 CFR 1.102(c)(1), filed May 31, 2011, to make the above-identified application special based on applicant's age as set forth in MPEP § 708.02, Section IV.

The petition is **GRANTED**.

A grantable petition to make an application special under 37 CFR 1.102(c)(1) and MPEP § 708.02, Section IV: Applicant's Age must be accompanied by evidence showing that at least one of the applicants is 65 years of age, or more, such as a birth certificate or a statement by applicant. No fee is required

The instant petition includes a statement by a registered attorney. Accordingly, the above-identified application has been accorded "special" status.

Telephone inquiries concerning this decision should be directed to JoAnne Burke at 571-272-4584.

All other inquiries concerning either the examination or status of the application should be directed to the Technology Center.

The application is being forwarded to the Office of Patent Application Processing (OPAP) for action on the merits commensurate with this decision.

JoAnne Burke
Petitions Examiner
Office of Petitions

UNITED STATES PATENT AND TRADEMARK OFFICE

UNITED STATES DEPARTMENT OF COMMERCE
United States Patent and Trademark Office
Address: COMMISSIONER FOR PATENTS
P.O. Box 1450
Alexandria, Virginia 22313-1450
www.uspto.gov

APPLICATION NO.	FILING DATE	FIRST NAMED INVENTOR	ATTORNEY DOCKET NO.	CONFIRMATION NO.
13/149,264	05/31/2011	Hajime ZEMBUTSU	Q124846	1110

23373 7590 07/19/2011
SUGHRUE MION, PLLC
2100 PENNSYLVANIA AVENUE, N.W.
SUITE 800
WASHINGTON, DC 20037

EXAMINER

ART UNIT	PAPER NUMBER
2617	

NOTIFICATION DATE	DELIVERY MODE
07/19/2011	ELECTRONIC

Please find below and/or attached an Office communication concerning this application or proceeding.

The time period for reply, if any, is set in the attached communication.

Notice of the Office communication was sent electronically on above-indicated "Notification Date" to the following e-mail address(es):

sughrue@sughrue.com
PPROCESSING@SUGHRUE.COM
USPTO@SUGHRUE.COM

UNITED STATES PATENT AND TRADEMARK OFFICE

Commissioner for Patents
United States Patent and Trademark Office
P.O. Box 1450
Alexandria, VA 22313-1450
www.uspto.gov

SUGHRUE MION, PLLC
2100 PENNSYLVANIA AVENUE, N.W.
SUITE 800
WASHINGTON DC 20037

In re Application of	**: DECISION ON REQUEST TO**
ZEMBUTSU et al.	**: PARTICIPATE IN THE PATENT**
Application No.: 13/149,264	**: PROSECUTION HIGHWAY**
Filed: 31 May 2011	**: PROGRAM AND PETITION**
Attorney Docket No.: Q124846	**: TO MAKE SPECIAL UNDER**
For: COMMUNICATION SYSTEM AND COMMUNICATION CONTROLLING METHOD	**: 37 CFR 1.102(a)**

This is a decision on the request to participate in the Patent Prosecution Highway (PPH) program and the petition under 37 CFR 1.102(a), filed 31 May 2011, to make the above-identified application special.

The request and petition are **GRANTED**.

Discussion

A grantable request to participate in the PPH pilot program and petition to make special require:

1. The U.S. application is
    a. a Paris Convention application which either
        i. validly claims priority under 35 U.S.C. 119(a) and 37 CFR 1.55 to one or more applications filed in the JPO, or
        ii. validly claims priority to a PCT application that contains no priority claims, or
    b. a national stage application under the PCT (an application which entered the national stage in the U.S. from a PCT international application after compliance with 35 U.S.C. 371), which PCT application
        i. validly claims priority to an application filed in the JPO, or
        ii. validly claims priority to a PCT application that contains no priority claims, or
        iii. contains no priority claim, or
    c. a so-called bypass application filed under 35 U.S.C. 111(a) which validly claims benefit under 35 U.S.C. 120 to a PCT application, which PCT application
        i. validly claims priority to an application filed in the JPO, or

ii. validly claims priority to a PCT application that contains no priority claims, or
iii. contains no priority claim;

2. Applicant must submit a copy of:
   a. The allowable/patentable claim(s) from the JPO application(s);
   b. An English translation of the allowable/patentable claim(s) and
   c. A statement that the English translation is accurate;
3. Applicant must:
   a. Ensure all the claims in the U.S. application must sufficiently correspond or be amended to sufficiently correspond to the allowable/patentable claim(s) in the JPO application(s) and
   b. Submit a claims correspondence table in English;
4. Examination of the U.S. application has <u>not</u> begun;
5. Applicant must submit:
   a. Documentation of prior office action:
      i. a copy of the office action(s) just prior to the "Decision to Grant a Patent" from each of the JPO application(s) containing the allowable/patentable claim(s) or
      ii. if the allowable/patentable claims(s) are from a "Notification of Reasons for Refusal" then the Notification of Reasons for Refusal or
      iii. if the JPO application is a first action allowance then no office action from the JPO is necessary should be indicated on the request/petition form;
   b. An English language translation of the JPO Office action from (5)(a)(i)-(ii) above
   c. A statement that the English translation is accurate;
6. Applicant must submit:
   a. An IDS listing the documents cited by the JPO examiner in the JPO office action (unless already submitted in this application)
   b. Copies of the documents except U.S. patents or U.S. patent application publications (unless already submitted in this application);

The request to participate in the PPH pilot program and petition comply with the above requirements. Accordingly, the above-identified application has been accorded "special" status.

Inquiries concerning this decision should be directed to Lee W. Young at 571-272-4549.

All other inquiries concerning the examination or status of the application is accessible in the PAIR system at http://www.uspto.gov/ebc.index.html.

This application will be forwarded to the examiner for action on the merits commensurate with this decision once this application's formality reviews have been completed.

Lee W. Young
TQAS, Technology Center 2600

UNITED STATES PATENT AND TRADEMARK OFFICE

Commissioner for Patents
United States Patent and Trademark Office
P.O. Box 1450
Alexandria, VA 22313-1450
www.uspto.gov

MCCARTER & ENGLISH, LLP BOSTON
265 Franklin Street
Boston MA 02110

MAILED
JUN 14 2011
OFFICE OF PETITIONS

In re Application of	:	
Arnold M. Heitmann	:	
Application No. 13/149,335	:	DECISION ON PETITION
Filed: May 31, 2011	:	TO MAKE SPECIAL UNDER
Attorney Docket No. **118754-00104**	:	37 CFR 1.102(c)(1)
	:	

This is a decision on the petition under 37 CFR 1.102(c)(1), filed May 31, 2011, to make the above-identified application special based on applicant's age as set forth in MPEP § 708.02, Section IV.

The petition is **GRANTED**.

A grantable petition to make an application special under 37 CFR 1.102(c)(1) and MPEP § 708.02, Section IV: Applicant's Age must be accompanied by evidence showing that at least one of the applicants is 65 years of age, or more, such as a birth certificate or a statement by applicant. No fee is required

The instant petition includes a statement by a registered attorney. Accordingly, the above-identified application has been accorded "special" status.

Telephone inquiries concerning this decision should be directed to JoAnne Burke at 571-272-4584.

All other inquiries concerning either the examination or status of the application should be directed to the Technology Center.

The application is being forwarded to the Office of Patent Application Processing (OPAP) for action on the merits commensurate with this decision.

JoAnne Burke
Petitions Examiner
Office of Petitions

UNITED STATES PATENT AND TRADEMARK OFFICE

COMMISSIONER FOR PATENTS
UNITED STATES PATENT AND TRADEMARK OFFICE
P.O. BOX 1450
ALEXANDRIA, VA 22313-1450
www.uspto.gov

Paper No.

Jetter & Associates,
P.A./University of
Central Florida Research
Foundation, Inc.
8295 North Military Trail,
Suite B
Palm Beach Gardens FL 33410

MAILED
AUG 23 2011
OFFICE OF PETITIONS

In re Application of :
Huo et al. : DECISION ON PETITION
Application No. 13/149,338 :
Deposited: May 31, 2011 :
Atty Docket No. UCF-32068 :
(7230) DIV :

This is a decision on the "PETITION UNDER 37 CFR 1.182" filed July 26, 2011, requesting that inadvertently omitted drawing sheets be entered in the above-identified application and the application be accorded a filing date of May 31, 2011. This petition is being treated pursuant to 37 CFR 1.53(e)(2)[1].

Application papers in the above-identified application were deposited on May 31, 2011. However, on June 20, 2011, the Office mailed applicants a "Notice of Incomplete Nonprovisional Application," notifying applicants that the application papers had not been accorded a filing date because the application was deposited without drawings. This Notice set a two-month period for reply, pursuant to 37 CFR 1.181(f).

In response, applicants timely filed this petition. On petition, petitioner acknowledges inadvertently omitting the drawings with the application as filed. Petitioner requests

[1] Any request for review of a notification pursuant to paragraph (e)(1) of this section, or a notification that the original application papers lack a portion of the specification or drawing(s), must be by way of a petition pursuant to this paragraph accompanied by the fee set forth in § 1.17(f). In the absence of a timely (§ 1.181(f)) petition pursuant to this paragraph, the filing date of an application in which the applicant was notified of a filing error pursuant to paragraph (e)(1) of this section will be the date the filing error is corrected.

that FIGS 1(a) - 7 contained in the prior application be included in the present divisional application based on the incorporation by reference statement contained in the application on filing and that a filing date of May 31, 2011 be granted under 37 CFR 1.182.

With respect to according this application a filing date, MPEP 201.06(c) provides that:

> … an applicant may incorporate by reference the prior application by including, in the application-as-filed, a statement that such specifically enumerated prior application or applications are "hereby incorporated herein by reference." The statement may appear in the specification or in the application transmittal letter. The inclusion of this incorporation by reference of the prior application(s) will permit an applicant to amend the continuing application to include any subject matter in such prior application(s), without the need for a petition. (emphasis supplied)

A review of the application as filed reveals that it included in the specification an explicit incorporation by reference of prior-filed application No. 12/050,780, including a specific reference to the incorporation of FIGS 1(a)-7 submitted in the prior nonprovisional application. Further, the petition includes payment of the petition fee and a copy of the omitted drawings.

However, the petition does not include an amendment submitting the omitted material pursuant to 37 CFR 1.182. Thus, a filing date cannot be accorded under 37 CFR 1.182 based on the incorporation by reference statement.

Nonetheless, it is controlling that a review of the application confirms that as filed the application contained at least one composition claim. MPEP 601.01(f) provides that:

> It has been USPTO practice to treat an application that contains at least one process or method claim as an application for which a drawing is not necessary for an understanding of the invention under 35 U.S.C. 113 (first sentence). The same practice has been followed in composition applications.

Thus, pursuant to § 601.01(f), in this application with at least one composition claim, a drawing is not considered essential for a filing date. Thus, the application is entitled to a filing date without drawings present in the application.

Accordingly, the Office should have mailed a Notice of Omitted Items and not a Notice of Incomplete Nonprovisional Application.

Given that the application is entitled to a filing date, no petition pursuant to 37 CFR 1.182 is required.

If applicant wishes to rely on the explicit incorporation by reference statement to enter the drawing figures, the petitioner must submit an amendment in compliance with §§ 1.182 and 1.121 as appropriate within TWO (2) MONTHS of the mailing date of this decision. This period is not extendable. See 37 CFR 1.181(f), and MPEP 608.01(p). This amendment will be considered by the examiner. Obviously, in view of the incorporation by reference of the prior application, FIGS 1(a)-7 are not new matter if they were a part of the disclosure of the prior application.

To the extent the instant petition requests a filing date of May 31, 2011 with no drawings present in the application, the petition is **GRANTED**.

Given the basis for granting this petition, the petition fee is being refunded to Deposit Account No. 50-5135, as authorized.

The Office of Data Management has been advised of this decision. Pursuant to this decision, the application has been referred for:

- **according of a filing date of May 31, 2011**;
- for indication in Office records, as appropriate, that "0" sheets of drawings were present on filing; and
- for issuance of a filing receipt.

Telephone inquiries concerning this decision may be directed to the undersigned at (571) 272-3219.

Nancy Johnson

Nancy Johnson
Senior Petitions Attorney
Office of Petitions

Doc Code: PET.GREEN
Document Description: Petition for Green Tech Pilot

PTO/SB/420 (03-11)

PETITION TO MAKE SPECIAL UNDER THE GREEN TECHNOLOGY PILOT PROGRAM

Attorney Docket Number: 250729 -1	Application Number (if known): 13/149,395	Filing date: May 31, 2011

First Named Inventor: Scott Daniel Feldman-Peabody

Title: MULTI-LAYER N-TYPE STACK FOR CADMIUM TELLURIDE BASED THIN FILM PHOTOVOLTAIC DEVICES AND METHODS OF MAKING

APPLICANT HEREBY REQUESTS TO PARTICIPATE IN THE GREEN TECHNOLOGY PILOT PROGRAM FOR THE ABOVE-IDENTIFIED APPLICATION. See Instruction Sheet on page 2.

This petition must be timely filed electronically using the USPTO electronic filing system, EFS-Web.

1. By filing this petition:

   Applicant is requesting early publication: Applicant hereby requests early publication under 37 CFR 1.219 and the publication fee set forth in 37 CFR 1.18(d) accompanies this request.

2. By filing this petition: applicant is agreeing to make an election without traverse in a telephonic interview and elect an invention that meets the eligibility requirements for the Green Technology Pilot Program, if the Office determines that the claims are not obviously directed to a single invention. See Instruction Sheet.

3. This request is accompanied by statements of special status for the eligibility requirement.

4. The application contains no more than three (3) independent claims and twenty (20) total claims.

5. The application does not contain any multiple dependent claims.

6. Other attachments: Statement Concerning the Basis for the Special Status

Signature /Allison W. Mages/	Date October 21, 2011
Name (Print/Typed) Allison W. Mages	Registration Number 57,275

Note: Signatures of all the inventors or assignees of record of the entire interest or their representative(s) are required in accordance with 37 CFR 1.33 and 11.18. Please see 37 CFR 1.4(d) for the form of the signature. If necessary, submit multiple forms for more than one signature, see below.*

☐ *Total of _____ forms are submitted.

If you need assistance in completing the form, call 1-800-PTO-9199 and select option 2.

IN THE UNITED STATES PATENT AND TRADEMARK OFFICE

First Named Inventor: Scott Daniel Feldman-Peabody	)
Confirmation No.: 1390	)
	)
Serial No.: 13/149,395	)
	)
Filing Date: May 31, 2011	)
	)
Atty Docket No.: 250729-1	)

VIA EFS
Commissioner for Patents
P.O. Box 1450
Alexandria, VA 22313-1450

Statement Concerning the Basis for the Special Status

SIR:

The application relates generally to a multi-layer n-type stack for use in a photovoltaic device, along with their methods of deposition. More particularly, the subject matter disclosed herein relates to a multi-layer n-type stack including a combination of cadmium, sulfur, and/or oxygen for use in cadmium telluride thin film photovoltaic devices and their methods of manufacture. (See [0001]).

Thin film photovoltaic (PV) modules (also referred to as "solar panels") based on cadmium telluride (CdTe) paired with cadmium sulfide (CdS) as the photo-reactive components are gaining wide acceptance and interest in the industry. CdTe is a semiconductor material having characteristics particularly suited for conversion of solar energy to electricity. For example, CdTe has an energy bandgap of about 1.45 eV, which enables it to convert more energy from the solar spectrum as compared to lower bandgap semiconductor materials historically used in solar cell applications (e.g., about 1.1 eV for silicon). Also,

CdTe converts radiation energy in lower or diffuse light conditions as compared to the lower bandgap materials and, thus, has a longer effective conversion time over the course of a day or in cloudy conditions as compared to other conventional materials. (See [0002]).

Applicant respectfully submits that Special Status is sought on the basis that the present invention materially contributes to the discovery or development of renewable energy resources.

The undersigned representative may be contacted at the number below to facilitate the resolution of any matters. Please charge any fees that are incurred in connection with this Statement to deposit account no. 09-0470.

Respectfully submitted,

General Electric Company

By : /Allison W. Mages/
Allison W. Mages
Reg. No. 57,275

Dated: October 21, 2011

GE Global Patent Operation
2 Corporate Drive, Suite 648
Shelton, CT 06484
203-944-6730

UNITED STATES PATENT AND TRADEMARK OFFICE

UNITED STATES DEPARTMENT OF COMMERCE
United States Patent and Trademark Office
Address: COMMISSIONER FOR PATENTS
P.O. Box 1450
Alexandria, Virginia 22313-1450
www.uspto.gov

APPLICATION NO.	FILING DATE	FIRST NAMED INVENTOR	ATTORNEY DOCKET NO.	CONFIRMATION NO.
13/149,395	05/31/2011	Scott Daniel Feldman-Peabody	250729-1/PRSS-72A	1390

93081 7590 10/27/2011
Dority & Manning, P.A. and Primestar Solar Inc.
Post Office Box 1449
Greenville, SC 29602

EXAMINER

ART UNIT	PAPER NUMBER
2812	

MAIL DATE	DELIVERY MODE
10/27/2011	PAPER

Please find below and/or attached an Office communication concerning this application or proceeding.

The time period for reply, if any, is set in the attached communication.

UNITED STATES PATENT AND TRADEMARK OFFICE

Commissioner for Patents
United States Patent and Trademark Office
P.O. Box 1450
Alexandria, VA 22313-1450
www.uspto.gov

Dority & Manning, P.A. and Primestar Solar Inc.
Post Office Box 1449
Greenville SC 29602

In re Application of	:	
FELDMAN-PEABODY et al.	:	DECISION ON PETITION
Application No. 13/149,395	:	TO MAKE SPECIAL UNDER
Filed: May 31, 2011	:	THE GREEN TECHNOLOGY
Attorney Docket No. 250729-1/PRSS-72A	:	PILOT PROGRAM

This is a decision on the petition under 37 CFR 1.102, filed on October 21, 2011, to make the above-identified application special under the pilot program for applications pertaining to Green Technologies as set forth 74 Federal Register Notice 64666 (December 8, 2009) and amended by 75 Federal Register Notice 28554 (May 21, 2010) and 75 Federal Register Notice 69049 (November 10, 2010).

The petition is **GRANTED**.

A grantable petition to make an application special under 37 CFR 1.102 and the pilot program as set forth in 74 FR 64666 must be directed to a nonprovisional application filed under 35 USC 111(a) or be a national stage entry under 35 USC 371, exclusive of any reissue applications.

In order to qualify for special status, the following requirements must be met. 1) The application must have no more than 3 independent claims and no more than 20 total claims. 2) The application must not contain any multiple dependent claims. 3) The petition must state the basis for seeking special status, i.e., the claimed invention either: A) materially enhances the quality of the environment or B) materially contributes to: i) the discovery or development of renewable energy resources, ii) the more efficient utilization and conservation of energy resources, or iii) greenhouse gas emission reduction. 4) If the disclosure is not clear on its face that the claimed invention materially contributes under category (A) or (B), the petition must be accompanied by a statement by the applicant, assignee, or an attorney/agent registered to practice before the Office explaining how the materiality standard is met. 5) A statement that applicant will agree to make an election without traverse in a telephonic interview if a restriction requirement is made by the examiner. 6) The petition to make special must be filed electronically. 7) The petition must be filed at least one day prior to the date that a first Office Action appears in the Patent Application Information Retrieval (PAIR) system. 8) The petition must be accompanied by a request for early publication in compliance with 37 CFR 1.219 and include the publication fee as set forth in 37 CFR 1.18(d).

The requirement for a fee for consideration of the petition to make special for applications pertaining to Green Technologies has been waived.

The instant petition complies with items 1 – 8 above. Accordingly, the above-identified application has been accorded "special" status.

Telephone inquiries concerning this decision should be directed to Lee W. Young at 571-272-4549.

The application is being forwarded to the Technology Center Art Unit 2812 for action on the merits commensurate with this decision.

Lee W. Young
Quality Assurance Specialist
Technology Center 2600

Doc Code: PET.GREEN
Document Description: Petition for Green Tech Pilot

PTO/SB/420 (03-11)

PETITION TO MAKE SPECIAL UNDER THE GREEN TECHNOLOGY PILOT PROGRAM

Attorney Docket Number: 248063	Application Number (if known): 13/149,396	Filing date: May 31, 2011

First Named Inventor: John Paul Davis

Title: SYSTEM AND METHODS FOR MONITORING OIL CONDITIONS OF A WIND TURBINE GEARBOX

APPLICANT HEREBY REQUESTS TO PARTICIPATE IN THE GREEN TECHNOLOGY PILOT PROGRAM FOR THE ABOVE-IDENTIFIED APPLICATION. See Instruction Sheet on page 2.

This petition must be timely filed electronically using the USPTO electronic filing system, EFS-Web.

1. By filing this petition:

   Applicant is requesting early publication: Applicant hereby requests early publication under 37 CFR 1.219 and the publication fee set forth in 37 CFR 1.18(d) accompanies this request.

2. By filing this petition: applicant is agreeing to make an election without traverse in a telephonic interview and elect an invention that meets the eligibility requirements for the Green Technology Pilot Program, if the Office determines that the claims are not obviously directed to a single invention. See Instruction Sheet.

3. This request is accompanied by statements of special status for the eligibility requirement.

4. The application contains no more than three (3) independent claims and twenty (20) total claims.

5. The application does not contain any multiple dependent claims.

6. Other attachments: Statement Concerning the Basis for the Special Status

Signature /Allison W. Mages/	Date October 10, 2011
Name (Print/Typed) Allison W. Mages	Registration Number 57,275

***Note**: Signatures of all the inventors or assignees of record of the entire interest or their representative(s) are required in accordance with 37 CFR 1.33 and 11.18. Please see 37 CFR 1.4(d) for the form of the signature. If necessary, submit multiple forms for more than one signature, see below*.*

☐ *Total of _____ forms are submitted.

If you need assistance in completing the form, call 1-800-PTO-9199 and select option 2.

IN THE UNITED STATES PATENT AND TRADEMARK OFFICE

First Named Inventor: John Paul Davis	)
Confirmation No.: 1397	)
	)
Serial No.: 13/149,396	)
	)
Filing Date: May 31, 2011	)
	)
Atty Docket No.: 248063	)

VIA EFS
Commissioner for Patents
P.O. Box 1450
Alexandria, VA 22313-1450

Statement Concerning the Basis for the Special Status

SIR:

The present application relates generally to wind turbines and, more particularly, to a system and/or methods for monitoring the condition of oil contained within a gearbox of a wind turbine. (See [0001]).

Applicant respectfully submits that Special Status is sought on the basis that the present invention materially contributes to the discovery or development of renewable energy resources.

The undersigned representative may be contacted at the number below to facilitate the resolution of any matters. Please charge any fees that are incurred in connection with this Statement to deposit account no. 09-0470.

Respectfully submitted,

General Electric Company

By : /Allison W. Mages/
Allison W. Mages
Reg. No. 57,275

Dated: October 10, 2011

GE Global Patent Operation
2 Corporate Drive, Suite 648
Shelton, CT 06484
203-944-6730

UNITED STATES PATENT AND TRADEMARK OFFICE

UNITED STATES DEPARTMENT OF COMMERCE
United States Patent and Trademark Office
Address: COMMISSIONER FOR PATENTS
P.O. Box 1450
Alexandria, Virginia 22313-1450
www.uspto.gov

APPLICATION NO.	FILING DATE	FIRST NAMED INVENTOR	ATTORNEY DOCKET NO.	CONFIRMATION NO.
13/149,396	05/31/2011	John Paul Davis	248063/GEC-323	1397

87853 7590 10/26/2011
Dority & Manning, PA and General Electric Company
Post Office Box 1449
Greenville, SC 29602

EXAMINER
SCHECHTER, ANDREW M

ART UNIT	PAPER NUMBER
2857	

MAIL DATE	DELIVERY MODE
10/26/2011	PAPER

Please find below and/or attached an Office communication concerning this application or proceeding.

The time period for reply, if any, is set in the attached communication.

UNITED STATES PATENT AND TRADEMARK OFFICE

Commissioner for Patents
United States Patent and Trademark Office
P.O. Box 1450
Alexandria, VA 22313-1450
www.uspto.gov

Dority & Manning, PA and General Electric Company
Post Office Box 1449
Greenville SC 29602

In re Application of	:	
DAVIS et al	:	DECISION ON PETITION
Application No. 13/149,396	:	TO MAKE SPECIAL UNDER
Filed: May 31, 2011	:	THE GREEN TECHNOLOGY
Attorney Docket No. 248063/GEC-323	:	PILOT PROGRAM

This is a decision on the petition under 37 CFR 1.102, filed on October 10, 2011, to make the above-identified application special under the pilot program for applications pertaining to Green Technologies as set forth 74 Federal Register Notice 64666 (December 8, 2009) and amended by 75 Federal Register Notice 28554 (May 21, 2010) and 75 Federal Register Notice 69049 (November 10, 2010).

The petition is **GRANTED**.

A grantable petition to make an application special under 37 CFR 1.102 and the pilot program as set forth in 74 FR 64666 must be directed to a nonprovisional application filed under 35 USC 111(a) or be a national stage entry under 35 USC 371, exclusive of any reissue applications.

In order to qualify for special status, the following requirements must be met. 1) The application must have no more than 3 independent claims and no more than 20 total claims. 2) The application must not contain any multiple dependent claims. 3) The petition must state the basis for seeking special status, i.e., the claimed invention either: A) materially enhances the quality of the environment or B) materially contributes to: i) the discovery or development of renewable energy resources, ii) the more efficient utilization and conservation of energy resources, or iii) greenhouse gas emission reduction. 4) If the disclosure is not clear on its face that the claimed invention materially contributes under category (A) or (B), the petition must be accompanied by a statement by the applicant, assignee, or an attorney/agent registered to practice before the Office explaining how the materiality standard is met. 5) A statement that applicant will agree to make an election without traverse in a telephonic interview if a restriction requirement is made by the examiner. 6) The petition to make special must be filed electronically. 7) The petition must be filed at least one day prior to the date that a first Office Action appears in the Patent Application Information Retrieval (PAIR) system. 8) The petition must be accompanied by a request for early publication in compliance with 37 CFR 1.219 and include the publication fee as set forth in 37 CFR 1.18(d).

The requirement for a fee for consideration of the petition to make special for applications pertaining to Green Technologies has been waived.

The instant petition complies with items 1 – 8 above. Accordingly, the above-identified application has been accorded "special" status.

Telephone inquiries concerning this decision should be directed to Lee W. Young at 571-272-4549.

The application is being forwarded to the Technology Center Art Unit 2857 for action on the merits commensurate with this decision.

Lee W. Young
Quality Assurance Specialist
Technology Center 2600

UNITED STATES PATENT AND TRADEMARK OFFICE

UNITED STATES DEPARTMENT OF COMMERCE
United States Patent and Trademark Office
Address: COMMISSIONER FOR PATENTS
P.O. Box 1450
Alexandria, Virginia 22313-1450
www.uspto.gov

APPLICATION NO.	FILING DATE	FIRST NAMED INVENTOR	ATTORNEY DOCKET NO.	CONFIRMATION NO.
13/149,402	05/31/2011	Yong QIU	HW708212	1407

77399 7590 07/11/2011
Leydig, Voit & Mayer, Ltd
(for Huawei Technologies Co., Ltd)
Two Prudential Plaza Suite 4900
180 North Stetson Avenue
Chicago, IL 60601

EXAMINER
BANKS HAROLD, MARSHA DENISE

ART UNIT	PAPER NUMBER
2465	

NOTIFICATION DATE	DELIVERY MODE
07/11/2011	ELECTRONIC

Please find below and/or attached an Office communication concerning this application or proceeding.

The time period for reply, if any, is set in the attached communication.

Notice of the Office communication was sent electronically on above-indicated "Notification Date" to the following e-mail address(es):

Chgpatent@leydig.com
uspatent@huawei.com

UNITED STATES PATENT AND TRADEMARK OFFICE

Commissioner for Patents
United States Patent and Trademark Office
P.O. Box 1450
Alexandria, VA 22313-1450
www.uspto.gov

Leydig, Voit & Mayer, Ltd
(for Huawei Technologies Co., Ltd)
Two Prudential Plaza Suite 4900
180 North Stetson Avenue
Chicago IL 60601

MAILED

JUL 11 2011

DIRECTOR OFFICE
TECHNOLOGY CENTER 2400

In re Application of:
QIU, YONG
Serial No.: 13/149402
Filed: May 31, 2011
Docket Number: HW708212
Title: SYNCHRONIZATION METHOD, COMMUNICATION HANDOVER METHOD, RADIO NETWORK AND NODE

DECISION ON PETITION TO MAKE SPECIAL FOR NEW APPLICATION UNDER 37 C.F.R. § 1.102

This is a decision on the petition filed on May 31, 2011, to make the above-identified application special for accelerated examination procedure in accordance with 37 C.F.R. § 1.102(c)(2).

The petition to make the application special is GRANTED.

The application is eligible for accelerated examination and the petition complies with the conditions for granting the application special status pursuant to M.P.E.P. §708.02(a) and to the "Change to Practice for Petitions in Patent Applications to Make Special and for Accelerated Examination" published June 26, 2006, in the Federal Register. (71 Fed. Reg. 36323).

The prosecution of the instant application will be conducted expeditiously according to the following guidelines.

1. The application will be docketed to an examiner and taken up for action within two weeks of the date of this decision.

2. Restriction Practice:
   If the examiner determines that the claims are not directed to a single invention, a telephone request to elect one single invention will be made pursuant to M.P.E.P. §812.01. As a prerequisite to the grant of this petition, the applicant has agreed to make an oral election, by telephone, without traverse. If the applicant refuses to make an election without traverse, or the examiner cannot reach the applicant after a reasonable

effort, the examiner will treat the first claimed invention (invention defined by claim 1) as having being constructively elected without traverse for examination.

3. Office action:
If it is determined that, after appropriate consultation, there is a potential rejection or any other issue to be addressed, the examiner will telephone the applicant and arrange an interview to discuss and resolve the issue. An Office action, other than a Notice of Allowance and Fee(s) Due (Notice of Allowance), will not be issued unless either: 1) an interview was conducted but did not result in agreed to action that places the application in condition for allowance, or, 2) a determination is made that an interview would be unlikely to result in the application being placed in condition for allowance, and 3) an internal conference has been held to review any rejection of any claim.

4. Time for Reply:
An Office action other than a Notice of Allowance or a final Office action will set a shortened statutory period of one month or thirty days, whichever is longer, for reply with no extension of time available under 37 C.F.R. §1.136(a). Failure to timely file a reply within this non-extendible period for reply will result in the abandonment of the application.

5. Reply by Applicant:
A timely reply to an Office action other than the Notice of Allowance must be submitted electronically via EFS or EFS-web and limited to addressing the rejections, objections and requirement made. Any amendment that attempts to: 1) add claims which would result in more than three pending independent claims or more than twenty pending total claims; 2) present claims not encompassed by the pre-examination search or an updated accelerated examination support document; or 3) present claims that are directed a non-elected invention or an invention other than that previously claimed and examined in the application, will be treated as not fully responsive and will not be entered.

   For any amendment to the claims (including any new claim) that is not encompassed by the accelerated examination support document, applicant must provide an updated accelerated examination support document that encompasses the amended or new claims at the time of filing of the amendment.

   To proceed expeditiously with the examination, it is recommended that a reply with amendments made to any claim or with any new claim being added be accompanied by an updated accelerated examination support document or a statement explaining how the amended or new claim is supported by the original accelerated examination support document.

6. Information Disclosure Statement (IDS):
Any IDS filed during prosecution must be submitted electronically via EFS or EFS-web, accompanied by an updated accelerated examination support document, and be in compliance with 37 C.F.R. §1.97 and §1.98.

7. Post-Allowance Processing:
   To expedite processing of the allowed application into a patent, the applicant must: 1) pay the required fees within one month of the date of the Notice of Allowance, and 2) not file any post allowance papers not required by the Office. In no event may the issue fee be paid and accepted later than three months from the date of the Notice of Allowance.

8. After-Final and Appeal Procedures:
   To expedite prosecution, after receiving the final Office action, applicant must: 1) promptly file a notice of appeal, an appeal brief and appeal fees; and 2) not request a pre-appeal brief conference.

   Any amendment, affidavit or other evidence filed after final Office action must comply with applicable rules and the requirements outlined in numbered paragraphs 5 and 6 above.

   On appeal, the application will proceed according to normal appeal procedures. After appeal, the application will again be treated special.

9. Proceedings Outside the Normal Examination Process:
   If the application becomes involved in a proceeding that is outside the normal examination process (e.g., a secrecy order, national security review, interference proceeding, petitions under 37 C.F.R. §1.181, §1.182 or §1.183), the application will be treated special before and after such proceeding.

10. Final Disposition:
    The twelve-month goal of this accelerated examination procedure ends with a final disposition. The mailing of a final Office action, a Notice of Allowance, the filing of a Notice of Appeal, or the filing of a Request for Continued Examination (RCE) is the final disposition. However, the application retains its special status after the filing of an RCE.

If, during prosecution, a paper is not filed electronically using EFS-web, a reply is filed but is not fully responsive, the application is involved in an appeal or a proceeding outside normal examination process, the application will still be examined expeditiously, however, the final disposition may occur more than twelve months from the filing of the application.

Any inquiry regarding this decision should be directed to the undersigned at (571) 272-3126.

Chau T. Nguyen

Chau T. Nguyen
Quality Assurance Specialist
Technology Center 2400
Network, Multiplexing, Cable and Security