Doc Code: PET.GREEN
Document Description: Petition for Green Tech Pilot

PTO/SB/420 (03-11)

PETITION TO MAKE SPECIAL UNDER THE GREEN TECHNOLOGY PILOT PROGRAM

Attorney Docket Number: TMP-068	Application Number (if known): 13/161,822	Filing date: June 16, 2011

First Named Inventor: Kazuhisa TSUTSUMI et al.

Title: POWER GENERATING APPARATUS OF RENEWABLE ENERGY TYPE

APPLICANT HEREBY REQUESTS TO PARTICIPATE IN THE GREEN TECHNOLOGY PILOT PROGRAM FOR THE ABOVE-IDENTIFIED APPLICATION. See Instruction Sheet on page 2.

This petition must be timely filed electronically using the USPTO electronic filing system, EFS-Web.

1. By filing this petition:

   Applicant is requesting early publication: Applicant hereby requests early publication under 37 CFR 1.219 and the publication fee set forth in 37 CFR 1.18(d) accompanies this request.

2. By filing this petition: applicant is agreeing to make an election without traverse in a telephonic interview and elect an invention that meets the eligibility requirements for the Green Technology Pilot Program, if the Office determines that the claims are not obviously directed to a single invention. See Instruction Sheet.

3. This request is accompanied by statements of special status for the eligibility requirement.

4. The application contains no more than three (3) independent claims and twenty (20) total claims.

5. The application does not contain any multiple dependent claims.

6. Other attachments: _____

Signature /Kenneth M. Berner/	Date November 16, 2011
Name (Print/Typed) Kenneth M. Berner	Registration Number 37,093

Note: *Signatures of all the inventors or assignees of record of the entire interest or their representative(s) are required in accordance with 37 CFR 1.33 and 11.18. Please see 37 CFR 1.4(d) for the form of the signature. If necessary, submit multiple forms for more than one signature, see below*.*

☐ *Total of _____ forms are submitted.

If you need assistance in completing the form, call 1-800-PTO-9199 and select option 2.

Instruction Sheet for
Petition to Make Special Under the Green Technology Pilot Program

(Not to be Submitted to the USPTO)

The following is a summary of the requirements (for more information see the notices (i) "Pilot Program for Green Technologies Including Greenhouse Gas Reduction," (ii) "Elimination of Classification Requirement in the Green Technology Pilot Program," and (iii) "Expansion and Extension of the Green Technology Pilot Program," available on the USPTO web site at http://www.uspto.gov/patents/init_events/green_tech.jsp):

(1) The application must be a non-reissue, non-provisional utility application filed under 35 U.S.C. 111(a), or an international application that has entered the national stage in compliance with 35 U.S.C. 371, irrespective of the filing date of the application. Reexamination proceedings are excluded from this pilot program.

(2) The application must contain three or fewer independent claims and twenty or fewer total claims. The application must not contain any multiple dependent claims. For an application that contains more than three independent claims or twenty total claims, or multiple dependent claims, applicant must file a preliminary amendment in compliance with 37 CFR 1.121 to cancel the excess claims and/or the multiple dependent claims at the time the petition to make special is filed.

(3) The claims must be directed to a single invention that materially enhances the quality of the environment, or that materially contributes to: (1) the discovery or development of renewable energy resources; (2) the more efficient utilization and conservation of energy resources; or (3) green house gas emission reduction (see the eligibility requirements of sections II and III of the notice (i) cited above). The petition must include a statement that, if the USPTO determines that the claims are directed to multiple inventions (e.g., in a restriction requirement), applicant will agree to make an election without traverse in a telephonic interview, and elect an invention that meets the eligibility requirements in section II or III of the notice (i) cited above.

(4) The petition to make special must be timely filed electronically using the USPTO electronic filing system, EFS-Web, and selecting the document description of "Petition for Green Tech Pilot" on the EFS-Web screen. Applicant should use form PTO/SB/420, which is available as a Portable Document Format (PDF) fillable form in EFS-Web and on the USPTO Web site.

(5) The petition to make special must be filed at least one day prior to the date that a first Office action (which may be an Office action containing only a restriction requirement) appears in the Patent Application Information Retrieval (PAIR) system. Applicant may check the status of the application using PAIR.

(6) The petition to make special must be accompanied by a request for early publication in compliance with 37 CFR 1.219 and the publication fee set forth in 37 CFR 1.18(d).

Privacy Act Statement

The **Privacy Act of 1974 (P.L. 93-579)** requires that you be given certain information in connection with your submission of the attached form related to a patent application or patent. Accordingly, pursuant to the requirements of the Act, please be advised that: (1) the general authority for the collection of this information is 35 U.S.C. 2(b)(2); (2) furnishing of the information solicited is voluntary; and (3) the principal purpose for which the information is used by the U.S. Patent and Trademark Office is to process and/or examine your submission related to a patent application or patent. If you do not furnish the requested information, the U.S. Patent and Trademark Office may not be able to process and/or examine your submission, which may result in termination of proceedings or abandonment of the application or expiration of the patent.

The information provided by you in this form will be subject to the following routine uses:

1. The information on this form will be treated confidentially to the extent allowed under the Freedom of Information Act (5 U.S.C. 552) and the Privacy Act (5 U.S.C 552a). Records from this system of records may be disclosed to the Department of Justice to determine whether disclosure of these records is required by the Freedom of Information Act.
2. A record from this system of records may be disclosed, as a routine use, in the course of presenting evidence to a court, magistrate, or administrative tribunal, including disclosures to opposing counsel in the course of settlement negotiations.
3. A record in this system of records may be disclosed, as a routine use, to a Member of Congress submitting a request involving an individual, to whom the record pertains, when the individual has requested assistance from the Member with respect to the subject matter of the record.
4. A record in this system of records may be disclosed, as a routine use, to a contractor of the Agency having need for the information in order to perform a contract. Recipients of information shall be required to comply with the requirements of the Privacy Act of 1974, as amended, pursuant to 5 U.S.C. 552a(m).
5. A record related to an International Application filed under the Patent Cooperation Treaty in this system of records may be disclosed, as a routine use, to the International Bureau of the World Intellectual Property Organization, pursuant to the Patent Cooperation Treaty.
6. A record in this system of records may be disclosed, as a routine use, to another federal agency for purposes of National Security review (35 U.S.C. 181) and for review pursuant to the Atomic Energy Act (42 U.S.C. 218(c)).
7. A record from this system of records may be disclosed, as a routine use, to the Administrator, General Services, or his/her designee, during an inspection of records conducted by GSA as part of that agency's responsibility to recommend improvements in records management practices and programs, under authority of 44 U.S.C. 2904 and 2906. Such disclosure shall be made in accordance with the GSA regulations governing inspection of records for this purpose, and any other relevant (*i.e.*, GSA or Commerce) directive. Such disclosure shall not be used to make determinations about individuals.
8. A record from this system of records may be disclosed, as a routine use, to the public after either publication of the application pursuant to 35 U.S.C. 122(b) or issuance of a patent pursuant to 35 U.S.C. 151. Further, a record may be disclosed, subject to the limitations of 37 CFR 1.14, as a routine use, to the public if the record was filed in an application which became abandoned or in which the proceedings were terminated and which application is referenced by either a published application, an application open to public inspection or an issued patent.
9. A record from this system of records may be disclosed, as a routine use, to a Federal, State, or local law enforcement agency, if the USPTO becomes aware of a violation or potential violation of law or regulation.

UNITED STATES PATENT AND TRADEMARK OFFICE

UNITED STATES DEPARTMENT OF COMMERCE
United States Patent and Trademark Office
Address: COMMISSIONER FOR PATENTS
P.O. Box 1450
Alexandria, Virginia 22313-1450
www.uspto.gov

APPLICATION NO.	FILING DATE	FIRST NAMED INVENTOR	ATTORNEY DOCKET NO.	CONFIRMATION NO.
13/161,822	06/16/2011	Kazuhisa TSUTSUMI	TMP-068	6244

32628 7590 12/07/2011
KANESAKA BERNER AND PARTNERS LLP
1700 DIAGONAL RD
SUITE 310
ALEXANDRIA, VA 22314-2848

EXAMINER

ART UNIT	PAPER NUMBER
3745	

MAIL DATE	DELIVERY MODE
12/07/2011	PAPER

Please find below and/or attached an Office communication concerning this application or proceeding.

The time period for reply, if any, is set in the attached communication.

UNITED STATES PATENT AND TRADEMARK OFFICE

Commissioner for Patents
United States Patent and Trademark Office
P.O. Box 1450
Alexandria, VA 22313-1450
www.uspto.gov

KANESAKA BERNER AND PARTNERS LLP
1700 DIAGONAL RD
SUITE 310
ALEXANDRIA VA 22314-2848

	:	
In re Application of		
TSUTSUMI, KAZUHISA et. al.	:	DECISION ON PETITION
Application No. 13/161,822	:	TO MAKE SPECIAL UNDER
Filed: June 16, 2011	:	THE GREEN TECHNOLOGY
Attorney Docket No. TMP-068	:	PILOT PROGRAM

This is a decision on the petition under 37 CFR 1.102, filed November 16, 2011, to make the above-identified application special under the pilot program for applications pertaining to Green Technologies as set forth in 74 Federal Register Notice 64666 (December 8, 2009) and amended by 75 Federal Register Notice 28554 (May 21, 2010) and 75 Federal Register Notice 69049 (November 10, 2010).

The petition is **granted**.

A grantable petition to make an application special under 37 CFR 1.102 and the pilot program as set forth in 74 FR 64666 must be directed to a nonprovisional application filed under 35 USC 111(a) or be a national stage entry under 35 USC 371, exclusive of any reissue applications.

If reconsideration of this decision is desired, a petition for reconsideration must be filed within ONE (1) MONTH OR THIRTY (30) DAYS from the mail date of this decision, whichever is longer. No extension of this time limit can be granted under 37 CFR 1.136(a) or (b). The petition for reconsideration should include an exhaustive attempt to provide the lacking item(s) noted below, since, after a decision on the petition for reconsideration, no further reconsideration or review of the matter will be undertaken by the Director.

In order to qualify for special status, the following requirements must be met. 1) The application must have no more than 3 independent claims and no more than 20 total claims. 2) The application must not contain any multiple dependent claims. 3) The petition must state the basis for seeking special status, i.e., the claimed invention either: A) materially enhances the quality of the environment or B) materially contributes to: i) the discovery or development of renewable energy resources, ii) the more efficient utilization and conservation of energy resources, or iii) greenhouse gas emission reduction. 4) If the disclosure is not clear on its face that the claimed invention materially contributes under category (A) or (B), the petition must be accompanied by

a statement by the applicant, assignee, or an attorney/agent registered to practice before the Office explaining how the materiality standard is met. 5) A statement that applicant will agree to make an election without traverse in a telephonic interview if a restriction requirement is made by the examiner. 6) The petition to make special must be filed electronically. 7) The petition must be filed at least one day prior to the date that a first Office Action appears in the Patent Application Information Retrieval (PAIR) system. 8) The petition must be accompanied by a request for early publication in compliance with 37 CFR 1.219 and include the publication fee as set forth in 37 CFR 1.18(d).

The requirement for a fee for consideration of the petition to make special for applications pertaining to Green Technologies has been waived.

The instant petition complies with items 1 – 8 above. Accordingly, the above-identified application has been accorded "special" status.

Telephone inquires concerning this decision should be directed to Henry C. Yuen at 571-272-4856.

This application will be forwarded to the Technology Center Art Unit 3745 for action on the merits commensurate with this decision.

/Henry C. Yuen/

Henry C. Yuen
Quality Assurance Specialist
Technology Center TC 3700

UNITED STATES PATENT AND TRADEMARK OFFICE

UNITED STATES DEPARTMENT OF COMMERCE
United States Patent and Trademark Office
Address: COMMISSIONER FOR PATENTS
P.O. Box 1450
Alexandria, Virginia 22313-1450
www.uspto.gov

APPLICATION NO.	FILING DATE	FIRST NAMED INVENTOR	ATTORNEY DOCKET NO.	CONFIRMATION NO.
13/161,834	06/16/2011	Christopher M. Hanna	56233-408 (THTK-3DVCON6)	6273

23630 7590 07/15/2011
McDermott Will & Emery
600 13th Street, NW
Washington, DC 20005-3096

EXAMINER

ART UNIT	PAPER NUMBER
2614	

NOTIFICATION DATE	DELIVERY MODE
07/15/2011	ELECTRONIC

Please find below and/or attached an Office communication concerning this application or proceeding.

The time period for reply, if any, is set in the attached communication.

Notice of the Office communication was sent electronically on above-indicated "Notification Date" to the following e-mail address(es):

mweipdocket@mwe.com

UNITED STATES PATENT AND TRADEMARK OFFICE

Commissioner for Patents
United States Patent and Trademark Office
P.O. Box 1450
Alexandria, VA 22313-1450
www.uspto.gov

McDermott Will & Emery
600 13th Street, NW
Washington DC 20005-3096

In re Application of: HANNA, CHRISTOPHER M. Serial No.: 13/161,834 Filed: June 16, 2011 Title: **BTSC ENCODER**	DECISION ON PETITION TO MAKE SPECIAL FOR NEW APPLICATION UNDER 37 C.F.R. § 1.102 & M.P.E.P. § 708.02

This is a decision on the petition filed on June 16, 2011 to make the above-identified application special for accelerated examination procedure under 37 C.F.R. § 1.102(d).

The petition to make the application special is **DISMISSED**.

REGULATION AND PRACTICE

A grantable petition to make special under 37 C.F.R. § 1.102(d) and pursuant to the "Change to Practice for Petitions in Patent Applications to Make Special and for Accelerated Examination" published in the Federal Register on June 26, 2006 (71 Fed. Reg. 36323), must satisfy the following conditions:

I. Conditions Regarding the Application:

1. the application must be a non-reissue utility or design application filed under 37 CFR 1.111(a);
2. the application, the petition and the required fees must be filed electronically using the USPTO's electronic filing system (EFS), or EFS-web; if not filed electronically, a statement asserting that EFS and EFS-web were not available during the normal business hours.
3. at the time of filing, the application must be complete under 37 CFR 1.51 and in condition for examination;
4. the application must contain three or fewer independent claims and twenty or fewer total claims and the claims must be directed to a single invention.

II. Conditions Regarding the Petition:

The petition must:

1. be filed with the application;

2. include a statement that applicant agrees not to separately argue the patentability of any independent claim during any appeal in the application;

3. include a statement that applicant agrees to make an election without traverse in a telephone interview.

4. include a statement that applicant agrees to conduct such an interview when requested by the examiner.

5. include a statement, made based on a good faith belief, that a preexamination search in compliance with the following requirements, was conducted, including an identification of the filed of search by United States class and subclass, where applicable, and for database searches, the search logic or chemical structure or sequence used as a query, the name of the file(s) searched and the database service, and the date of the search.

The preexamination search must:

5.1 involve U.S. patents and patent application publications, foreign patent documents, and non-patent literature, unless the applicant can justify with reasonable certainty that no references more pertinent than those already identified are likely to be found in the eliminated sources and includes such a justification with this statement;

5.2. be directed to the claimed invention and encompass all of the features of the claims, giving the claims the broadest reasonable interpretation;

5.3. encompass the disclosed features that may be claimed.

6. must provide in support of the petition an accelerated examination support document. An accelerated examination support document must include:

6.1. an information disclosure statement (IDS) in compliance with 37 CFR 1.98 citing each reference deemed most closely related to the subject matter of each of the claims;

6.2. an identification of all the limitations in the claims that are disclosed by the reference specifying where the limitation is disclosed in the cited reference;

6.3. a detailed explanation of how each of the claims are patentable over the references cited with particularity required by 37 CFR 1.111(b) and (c);

6.4. a concise statement of the utility of the invention as defined in each of the independent claims (unless the application is a design application);

6.5. a showing of where each limitation of the claims finds support under 35 USC 112, first paragraph, in the written description of the specification. If applicable, the showing must also identify: (1) each means- (or step) plus-function claim element that invokes consideration under 35 USC 112, sixth paragraph; and (2) the structure, material, or acts in the specification that corresponds to each means- (or step) plus-function claim element that invokes consideration under 35 USC 112, sixth paragraph; if the application claims the benefit of one or more applications under title 35, United States Code, the showing must also include where each limitation of the claims finds support under 35 USC 112, first paragraph, in each such application in which such supports exists;

6.6. an identification of any cited references that may be disqualified under 35 USC 103(c).

REVIEW OF FACTS

The conditions set forth under section I. above are considered to have been met. However, the petition fails to comply with conditions set forth under section II Items 5 – 5.3, and 6.3.

For these reasons cited above, the petition fails to meet the required conditions to be accorded special status under the accelerated examination procedure.

Regarding the requirement in item 5 - 5.3 above, the preexamination search document provided with the instant petition is deficient as follows: The search submitted by applicant is too narrow. A complete search should also include:

A search in Class/subclass:

348/481, 738
381/106, 107

If any request for reconsideration is filed, an updated preexamination search must be conducted as per item 5.1 above, and the Preexamination Search Document must be amended to indicate such; a new Information Disclosure Statement should be filed to cite any newly found prior art, and the Accelerated Examination Support Document must also be amended to include the necessary reference and discussion of any newly found and cited prior art in accordance with all of items 6 through 6.6 above.

Regarding the requirements of item 6.3, above, the Accelerated Examination Support Document is deficient because the section titled "Detailed Explanation of Patentability" fails to provide a "detailed explanation of how ***each of the claims*** are patentable over each of the references cited with particularity required by 37 CFR 1.111(b) and (c)" (emphasis added). Applicant provided only broad discussion of the patentability of the claims and failed to provide the detailed explanation of how each claim was patentable over the references cited.

DECISION

For the above-stated reasons, the petition is **dismissed**. The application will therefore be taken up by the examiner for action in its regular turn.

Petitioner is given a single opportunity to perfect the petition. Any request for reconsideration of this decision must be submitted within 1 (one) month or 30 (thirty) days, whichever is longer, (no extension of time under 37 CFR 1.136(a)) from the date of this decision in order to be considered timely. Any request for reconsideration must address the deficiencies indicated above.

Petitioner is reminded that, upon granting of the special status of the application on request for reconsideration, the application will be processed expeditiously. However, due to the dismissal of the instant petition, examination may not be completed within twelve months of the filing date of the application.

Any inquiry regarding this decision should be directed to Michael Horabik, Quality Assurance Specialist, at (571) 272-3068.

/Michael Horabik/

Michael Horabik
Quality Assurance Specialist
Technology Center 2600
Communications

UNITED STATES PATENT AND TRADEMARK OFFICE

UNITED STATES DEPARTMENT OF COMMERCE
United States Patent and Trademark Office
Address: COMMISSIONER FOR PATENTS
P.O. Box 1450
Alexandria, Virginia 22313-1450
www.uspto.gov

APPLICATION NO.	FILING DATE	FIRST NAMED INVENTOR	ATTORNEY DOCKET NO.	CONFIRMATION NO.
13/161,834	06/16/2011	Christopher M. Hanna	56233-408 (THTK-3DVCON6)	6273

23630 7590 09/01/2011
McDermott Will & Emery
600 13th Street, NW
Washington, DC 20005-3096

EXAMINER

ART UNIT	PAPER NUMBER
2614	

NOTIFICATION DATE	DELIVERY MODE
09/01/2011	ELECTRONIC

Please find below and/or attached an Office communication concerning this application or proceeding.

The time period for reply, if any, is set in the attached communication.

Notice of the Office communication was sent electronically on above-indicated "Notification Date" to the following e-mail address(es):

mweipdocket@mwe.com

United States Patent and Trademark Office

~~Commissioner for Patents~~
United States Patent and Trademark Office
P.O. Box 1450
Alexandria, VA 22313-1450
www.uspto.gov

McDermott Will & Emery
600 13th Street, NW
Washington DC 20005-3096

In re Application of: HANNA, CHRISTOPHER M. Serial No.: 13/161,834 Filed: June 16, 2011 Attorney Docket No: 56233-408 (THTK-3DVCON6) Title: **BTSC ENCODER**	DECISION ON PETITION TO MAKE SPECIAL FOR NEW APPLICATION UNDER 37 C.F.R. § 1.102 & M.P.E.P. § 708.02

This is a decision on the petition filed on August 12, 2011 requesting reconsideration to make the above-identified application special for accelerated examination procedure under 37 C.F.R. § 1.102(d).

All of the requirements to correct the deficiencies outlined in the petition decision mailed July 15, 2011 have been met.

The petition to make the application special is **GRANTED**.

The application is eligible for accelerated examination and the petition complies with the conditions for granting the application special status pursuant to the "Change to Practice for Petitions in Patent Applications to Make Special and for Accelerated Examination" published June 26, 2006, in the Federal Register. (71 Fed. Reg. 36323).

The prosecution of the instant application will be conducted expeditiously according to the following guidelines.

1. The application will be docketed to an examiner and taken up for action within two weeks of the date of this decision.

2. Restriction Practice:
   If the examiner determines that the claims are not directed to a single invention, a telephone request to elect one single invention will be made pursuant to MPEP 812.01. As a prerequisite to the grant of this petition, the applicant has agreed to make an oral election, by telephone, without traverse. If the applicant refuses to make an election without traverse, or the examiner cannot reach the applicant after a reasonable effort, the examiner will treat the first claimed invention (invention defined by claim 1) as having being constructively elected without traverse for examination.

3. Office action:
If it is determined that, after appropriate consultation, there is a potential rejection or any other issue to be addressed, the examiner will telephone the applicant and arrange an interview to discuss and resolve the issue. An Office action, other than a Notice of Allowance and Fee(s) Due (Notice of Allowance), will not be issued unless either: 1) an interview was conducted but did not result in agreed to action that places the application in condition for allowance, or, 2) a determination is made that an interview would be unlikely to result in the application being placed in condition for allowance, and 3) an internal conference has been held to review any rejection of any claim.

4. Time for Reply:
An Office action other than a Notice of Allowance or a final Office action will set a shortened statutory period of one month or thirty days, whichever is longer, for reply with no extension of time available under 37 CFR 1.136(a). Failure to timely file a reply within this non-extendible period for reply will result in the abandonment of the application.

5. Reply by Applicant:
A timely reply to an Office action other than the Notice of Allowance must be submitted electronically via EFS or EFS-web and limited to addressing the rejections, objections and requirement made. Any amendment that attempts to: 1) add claims which would result in more than three pending independent claims or more than twenty pending total claims; 2) present claims not encompassed by the pre-examination search or an updated accelerated examination support document; or 3) present claims that are directed a non-elected invention or an invention other than that previously claimed and examined in the application, will be treated as not fully responsive and will not be entered.

   For any amendment to the claims (including any new claim) that is not encompassed by the accelerated examination support document, applicant must provide an updated accelerated examination support document that encompasses the amended or new claims at the time of filing of the amendment.

   To proceed expeditiously with the examination, it is recommended that a reply with amendments made to any claim or with any new claim being added be accompanied by an updated accelerated examination support document or a statement explaining how the amended or new claim is supported by the original accelerated examination support document.

6. Information Disclosure Statement (IDS):
Any IDS filed during prosecution must be submitted electronically via EFS or EFS-web, accompanied by an updated accelerated examination support document, and be in compliance with 37 CFR 1.97 and 1.98.

7. Post-Allowance Processing:
To expedite processing of the allowed application into a patent, the applicant must: 1) pay the required fees within one month of the date of the Notice of Allowance, and 2) not file any post allowance papers not required by the Office. In no event may the issue fee be paid and accepted later than three months from the date of the Notice of Allowance.

8. After-Final and Appeal Procedures:
   To expedite prosecution, after receiving the final Office action, applicant must: 1) promptly file a notice of appeal, an appeal brief and appeal fees; and 2) not request a pre-appeal brief conference.

   Any amendment, affidavit or other evidence filed after final Office action must comply with applicable rules and the requirements outlined in numbered paragraphs 5 and 6 above.

   On appeal, the application will proceed according to normal appeal procedures. After appeal, the application will again be treated special.

9. Proceedings Outside the Normal Examination Process:
   If the application becomes involved in a proceeding that is outside the normal examination process (e.g., a secrecy order, national security review, interference proceeding, petitions under 37 CFR 1.181, 182 or 183), the application will be treated special before and after such proceeding.

10. Final Disposition:
    The twelve month goal of this accelerated examination procedure ends with a final disposition. The mailing of a final Office action, a Notice of Allowance, the filing of a Notice of Appeal, or the filing of a Request for Continued Examination (RCE) is the final disposition.

If, during prosecution, a paper is not filed electronically using EFS-web, a reply is filed but is not fully responsive, the application is involved in an appeal or a proceeding outside normal examination process, the application will still be examined expeditiously, however, the final disposition may occur more than twelve months from the filing of the application.

Any inquiry regarding this decision should be directed to Michael Horabik, Quality Assurance Specialist, at (571) 272-3068.

/Michael Horabik/

Michael Horabik
Quality Assurance Specialist
Technology Center 2600
Communications

PTO/SB/20PCT-EP (05-10)
Approved for use through 01/31/2012. OMB 0651-0058
U.S. Patent and Trademark Office; U. S. DEPARTMENT OF COMMERCE
Under the Paperwork Reduction Act of 1995, no persons are required to respond to a collection of information unless it displays a valid OMB control number.

REQUEST FOR PARTICIPATION IN THE PATENT COOPERATION TREATY - PATENT PROSECUTION HIGHWAY (PCT-PPH) PILOT PROGRAM BETWEEN THE EUROPEAN PATENT OFFICE (EPO) AND THE USPTO

Application No:	13/161852	Filing date:	June 16, 2011
First Named Inventor:	Stephen James Howard		
Title of the Invention:	Systems and Methods for Plasma Compression with Recycling of Projectiles		

THIS REQUEST FOR PARTICIPATION IN THE PCT-PPH PILOT PROGRAM ALONG WITH THE REQUIRED DOCUMENTS MUST BE SUBMITTED VIA EFS-WEB. INFORMATION REGARDING EFS-WEB IS AVAILABLE AT HTTP://WWW.USPTO.GOV/EBC/EFS_HELP.HTML

APPLICANT HEREBY REQUESTS PARTICIPATION IN THE PCT-PPH PROGRAM AND PETITIONS TO MAKE THE ABOVE-IDENTIFIED APPLICATION SPECIAL UNDER THE PCT-PPH PROGRAM.

The above-identified application is (1) a national stage entry of the corresponding PCT application, or (2) a national stage entry of another PCT application which claims priority to the corresponding PCT application, or (3) a national application that claims domestic/ foreign priority to the corresponding PCT application, or (4) a national application which forms the basis for the priority claim in the corresponding PCT application, or (5) a continuing application of a U.S. application that satisfies one of (1) to (4) above, or (6) a U.S. application that claims domestic benefit to a U.S. provisional application which forms the basis for the priority claim in the corresponding PCT application.

The corresponding PCT application number(s) is/are: PCT/US2010/043587

The international filing date of the corresponding PCT application(s) is/are: July 28, 2010

I. List of Required Documents:

a. **A copy of the latest international work product (WO/ISA, WO/IPEA, or IPER) in the above–identified corresponding PCT application(s)**

- [x] Is attached
- [ ] Is not attached because the document is already in the U.S. application.

b. **A copy of all claims which were indicated as having novelty, inventive step and industrial applicability in the above-identified corresponding PCT application(s).**

- [x] Is attached.
- [ ] Is not attached because the document is already in the U.S. application.

c. **English translations of the documents in a. and b. above are attached (if the documents are not in the English language). A statement that the English translation is accurate is attached for the document in b. above.**

This collection of information is required by 35 U.S.C. 119, 37 CFR 1.55, and 37 CFR 1.102(d). The information is required to obtain or retain a benefit by the public, which is to file (and by the USPTO to process) an application. Confidentiality is governed by 35 U.S.C. 122 and 37 CFR 1.11 and 1.14. This collection is estimated to take 2 hours to complete, including gathering, preparing, and submitting the completed application form to the USPTO. Time will vary depending upon the individual case. Any comments on the amount of time you require to complete this form and/or suggestions for reducing this burden should be sent to the Chief Information Officer, U.S. Patent and Trademark Office, U.S. Department of Commerce, P.O. Box 1450, Alexandria, VA 22313-1450. DO NOT SEND FEES OR COMPLETED FORMS TO THIS ADDRESS.

Approved for use through 01/31/2012. OMB 0651-0058
U.S.Patent and Trademark Office; U.S. DEPARTMENT OF COMMERCE
Under the Paperwork Reduction Act of 1995, no persons are required to respond to a collection of information unless it displays a valid OMB control number.

REQUEST FOR PARTICIPATION IN THE PCT-PPH PILOT PROGRAM BETWEEN THE EPO AND THE USPTO

(continued)

Application No.:	13/161852
First Named Inventor:	Stephen James Howard

d. **(1) An information disclosure statement listing the documents cited in the international work products (ISR, WO/ISA, WO/IPEA, IPER) of the corresponding PCT application.**

☐ Is attached

☒ Has already been filed in the above-identified U.S. application on July 11, 2011

(2) Copies of all documents (except) for U.S. patents or U.S. patent application publications)

☐ Are attached.

☒ Have already been filed in the above-identified U.S. application on July 11, 2011

II. Claims Correspondence Table:

Claims in US Application	Patentable Claims in the corresponding PCT Application	Explanation regarding the correspondence
1-23	1-23	Identical
24-26	1	Dependent claims (e.g., narrower in scope than Claim 1)

III. All the claims in the US application sufficiently correspond to the patentable claims in the corresponding PCT application.

Signature /Steven P. Ruden/	Date July 13, 2011
Name (Print/Typed) Steven P. Ruden	Registration Number 53538

Privacy Act Statement

The **Privacy Act of 1974 (P.L. 93-579)** requires that you be given certain information in connection with your submission of the attached form related to a patent application or patent. Accordingly, pursuant to the requirements of the Act, please be advised that: (1) the general authority for the collection of this information is 35 U.S.C. 2(b)(2); (2) furnishing of the information solicited is voluntary; and (3) the principal purpose for which the information is used by the U.S. Patent and Trademark Office is to process and/or examine your submission related to a patent application or patent. If you do not furnish the requested information, the U.S. Patent and Trademark Office may not be able to process and/or examine your submission, which may result in termination of proceedings or abandonment of the application or expiration of the patent.

The information provided by you in this form will be subject to the following routine uses:

1. The information on this form will be treated confidentially to the extent allowed under the Freedom of Information Act (5 U.S.C. 552) and the Privacy Act (5 U.S.C 552a). Records from this system of records may be disclosed to the Department of Justice to determine whether disclosure of these records is required by the Freedom of Information Act.
2. A record from this system of records may be disclosed, as a routine use, in the course of presenting evidence to a court, magistrate, or administrative tribunal, including disclosures to opposing counsel in the course of settlement negotiations.
3. A record in this system of records may be disclosed, as a routine use, to a Member of Congress submitting a request involving an individual, to whom the record pertains, when the individual has requested assistance from the Member with respect to the subject matter of the record.
4. A record in this system of records may be disclosed, as a routine use, to a contractor of the Agency having need for the information in order to perform a contract. Recipients of information shall be required to comply with the requirements of the Privacy Act of 1974, as amended, pursuant to 5 U.S.C. 552a(m).
5. A record related to an International Application filed under the Patent Cooperation Treaty in this system of records may be disclosed, as a routine use, to the International Bureau of the World Intellectual Property Organization, pursuant to the Patent Cooperation Treaty.
6. A record in this system of records may be disclosed, as a routine use, to another federal agency for purposes of National Security review (35 U.S.C. 181) and for review pursuant to the Atomic Energy Act (42 U.S.C. 218(c)).
7. A record from this system of records may be disclosed, as a routine use, to the Administrator, General Services, or his/her designee, during an inspection of records conducted by GSA as part of that agency's responsibility to recommend improvements in records management practices and programs, under authority of 44 U.S.C. 2904 and 2906. Such disclosure shall be made in accordance with the GSA regulations governing inspection of records for this purpose, and any other relevant (*i.e.*, GSA or Commerce) directive. Such disclosure shall not be used to make determinations about individuals.
8. A record from this system of records may be disclosed, as a routine use, to the public after either publication of the application pursuant to 35 U.S.C. 122(b) or issuance of a patent pursuant to 35 U.S.C. 151. Further, a record may be disclosed, subject to the limitations of 37 CFR 1.14, as a routine use, to the public if the record was filed in an application which became abandoned or in which the proceedings were terminated and which application is referenced by either a published application, an application open to public inspection or an issued patent.
9. A record from this system of records may be disclosed, as a routine use, to a Federal, State, or local law enforcement agency, if the USPTO becomes aware of a violation or potential violation of law or regulation.

PATENT COOPERATION TREATY

From the INTERNATIONAL SEARCHING AUTHORITY

To:
Delaney, Karoline A.
KNOBBE, MARTENS, OLSON & BEAR, LLP
2040 Main Street, 14th Floor
Irvine, CA 92614
ETATS-UNIS D'AMERIQUE

PCT

NOTIFICATION OF TRANSMITTAL OF THE INTERNATIONAL SEARCH REPORT AND THE WRITTEN OPINION OF THE INTERNATIONAL SEARCHING AUTHORITY, OR THE DECLARATION

(PCT Rule 44.1)

	Date of mailing *(day/month/year)* 30 November 2010 (30-11-2010)
Applicant's or agent's file reference GENFUS004VPC	**FOR FURTHER ACTION** See paragraphs 1 and 4 below
International application No. PCT/US2010/043587	International filing date *(day/month/year)* 28 July 2010 (28-07-2010)
Applicant GENERAL FUSION, INC.	

1. [X] The applicant is hereby notified that the international search report and the written opinion of the International Searching Authority have been established and are transmitted herewith.

   Filing of amendments and statement under Article 19:
   The applicant is entitled, if he so wishes, to amend the claims of the International Application (see Rule 46):

   When? The time limit for filing such amendments is normally two months from the date of transmittal of the International Search Report.

   Where? Directly to the International Bureau of WIPO, 34 chemin des Colombettes 1211 Geneva 20, Switzerland, Fascimile No.: (41-22) 338.82.70

   For more detailed instructions, see *PCT Applicant's Guide*, International Phase, paragraphs 9.004 - 9.011.

2. [ ] The applicant is hereby notified that no international search report will be established and that the declaration under Article 17(2)(a) to that effect and the written opinion of the International Searching Authority are transmitted herewith.

3. [ ] **With regard to any protest** against payment of (an) additional fee(s) under Rule 40.2, the applicant is notified that:

   [ ] the protest together with the decision thereon has been transmitted to the International Bureau together with the applicant's request to forward the texts of both the protest and the decision thereon to the designated Offices.

   [ ] no decision has been made yet on the protest; the applicant will be notified as soon as a decision is made.

4. **Reminders**

   The applicant may submit comments on an informal basis on the written opinion of the International Searching Authority to the International Bureau. The International Bureau will send a copy of such comments to all designated Offices unless an international preliminary examination report has been or is to be established. Following the expiration of 30 months from the priority date, these comments will also be made available to the public.

   Shortly after the expiration of **18 months** from the priority date, the international application will be published by the International Bureau. If the applicant wishes to avoid or postpone publication, a notice of withdrawal of the international application, or of the priority claim, must reach the International Bureau before completion of the technical preparations for international publication (Rules 90*bis*.1 and 90*bis*.3).

   Within **19 months** from the priority date, but only in respect of some designated Offices, a demand for international preliminary examination must be filed if the applicant wishes to postpone the entry into the national phase **until 30 months** from the priority date (in some Offices even later); otherwise, the applicant must, **within 20 months** from the priority date, perform the prescribed acts for entry into the national phase before those designated Offices.

   In respect of other designated Offices, the time limit of **30 months** (or later) will apply even if no demand is filed within 19 months.

   For details about the applicable time limits, Office by Office, see www.wipo.int/pct/en/texts/time_limits.html and the *PCT Applicant's Guide*, National Chapters.

Name and mailing address of the International Searching Authority	Authorized officer
European Patent Office, P.B. 5818 Patentlaan 2 NL-2280 HV Rijswijk Tel. (+31-70) 340-2040 Fax: (+31-70) 340-3016	PORRACHIA, Isabelle Tel: +31 (0)70 340-4447

PATENT COOPERATION TREATY

PCT

INTERNATIONAL SEARCH REPORT

(PCT Article 18 and Rules 43 and 44)

Applicant's or agent's file reference GENFUS004VPC	**FOR FURTHER ACTION**	see Form PCT/ISA/220 as well as, where applicable, item 5 below.
International application No. PCT/US2010/043587	International filing date *(day/month/year)* 28/07/2010	(Earliest) Priority Date *(day/month/year)* 29/07/2009
Applicant GENERAL FUSION, INC.		

This international search report has been prepared by this International Searching Authority and is transmitted to the applicant according to Article 18. A copy is being transmitted to the International Bureau.

This international search report consists of a total of 5 sheets.

[X] It is also accompanied by a copy of each prior art document cited in this report.

1. **Basis of the report**
   a. With regard to the **language**, the international search was carried out on the basis of:
      [X] the international application in the language in which it was filed
      [ ] a translation of the international application into _____, which is the language of a translation furnished for the purposes of international search (Rules 12.3(a) and 23.1(b))
   b. [ ] This international search report has been established taking into account the **rectification of an obvious mistake** authorized by or notified to this Authority under Rule 91 (Rule 43.6*bis*(a)).
   c. [ ] With regard to any **nucleotide and/or amino acid sequence** disclosed in the international application, see Box No. I.
2. [ ] **Certain claims were found unsearchable** (See Box No. II)
3. [ ] **Unity of invention is lacking** (see Box No III)
4. With regard to the **title**,
   [X] the text is approved as submitted by the applicant
   [ ] the text has been established by this Authority to read as follows:
5. With regard to the **abstract**,
   [X] the text is approved as submitted by the applicant
   [ ] the text has been established, according to Rule 38.2(b), by this Authority as it appears in Box No. IV. The applicant may, within one month from the date of mailing of this international search report, submit comments to this Authority
6. With regard to the **drawings**,
   a. the figure of the **drawings** to be published with the abstract is Figure No. 1
      [X] as suggested by the applicant
      [ ] as selected by this Authority, because the applicant failed to suggest a figure
      [ ] as selected by this Authority, because this figure better characterizes the invention
   b. [ ] none of the figures is to be published with the abstract

INTERNATIONAL SEARCH REPORT

International application No
PCT/US2010/043587

A. CLASSIFICATION OF SUBJECT MATTER
INV. G21B3/00 H05H1/02 H05H1/54
ADD.

According to International Patent Classification (IPC) or to both national classification and IPC

B. FIELDS SEARCHED

Minimum documentation searched (classification system followed by classification symbols)
G21B H05H

Documentation searched other than minimum documentation to the extent that such documents are included in the fields searched

Electronic data base consulted during the international search (name of data base and, where practical, search terms used)

EPO-Internal, INSPEC, WPI Data

C. DOCUMENTS CONSIDERED TO BE RELEVANT

Category*	Citation of document, with indication, where appropriate, of the relevant passages	Relevant to claim No.
A	HOWARD S ET AL: "Development of merged compact toroids for use as a magnetized target fusion plasma" JOURNAL OF FUSION ENERGY SPRINGER NEW YORK USA, vol. 28, no. 2, 11 November 2008 (2008-11-11), pages 156-161, XP002604406 ISSN: 0164-0313 DOI: 10.1007/S10894-008-9167-9 cited in the application the whole document	1-7, 24-26, 32-34
A	US 4 328 070 A (WINTERBERG FRIEDWARDT M) 4 May 1982 (1982-05-04) cited in the application the whole document	1,24

-/--

[X] Further documents are listed in the continuation of Box C. [X] See patent family annex.

* Special categories of cited documents :

'A' document defining the general state of the art which is not considered to be of particular relevance
'E' earlier document but published on or after the international filing date
'L' document which may throw doubts on priority claim(s) or which is cited to establish the publication date of another citation or other special reason (as specified)
'O' document referring to an oral disclosure, use, exhibition or other means
'P' document published prior to the international filing date but later than the priority date claimed

'T' later document published after the international filing date or priority date and not in conflict with the application but cited to understand the principle or theory underlying the invention
'X' document of particular relevance; the claimed invention cannot be considered novel or cannot be considered to involve an inventive step when the document is taken alone
'Y' document of particular relevance; the claimed invention cannot be considered to involve an inventive step when the document is combined with one or more other such documents, such combination being obvious to a person skilled in the art.
'&' document member of the same patent family

Date of the actual completion of the international search	Date of mailing of the international search report
12 October 2010	30/11/2010

Name and mailing address of the ISA/	Authorized officer
European Patent Office, P.B. 5818 Patentlaan 2 NL - 2280 HV Rijswijk Tel. (+31-70) 340-2040, Fax: (+31-70) 340-3016	Capostagno, Eros

3

Form PCT/ISA/210 (second sheet) (April 2005)

INTERNATIONAL SEARCH REPORT

International application No
PCT/US2010/043587

C(Continuation). DOCUMENTS CONSIDERED TO BE RELEVANT

Category*	Citation of document, with indication, where appropriate, of the relevant passages	Relevant to claim No.
A	US 2006/198483 A1 (LABERGE MICHEL G [CA]) 7 September 2006 (2006-09-07) cited in the application the whole document -----	1,24
A	PETERKIN R E JR: "Direct electromagnetic acceleration of a compact toroid to high density and high speed" PHYSICAL REVIEW LETTERS, USA, vol. 74, no. 16, 17 April 1995 (1995-04-17), pages 3165-3168+ 2PP, XP002604407 ISSN: 0031-9007 page 3165, left-hand column, paragraph 2 -----	1-6, 24-26
A	US 4 290 848 A (SUDAN RAVINDRA N) 22 September 1981 (1981-09-22) column 2, line 35 - line 57 figure -----	1,2,4,5, 16,18, 24,26, 29,38
A	US 4 435 354 A (WINTERBERG F [US]) 6 March 1984 (1984-03-06) cited in the application figures column 1, line 65 - column 2, line 66 -----	1,24
A	HARTMAN C W ET AL: "A compact torus fusion reactor utilizing a continuously generated string of CT's. The CT string reactor, CTSR" JOURNAL OF FUSION ENERGY, vol. 27, no. 1, 2 November 2007 (2007-11-02), pages 44-48, XP002604408 KLUWER ACADEMIC/PLENUM PUBLISHERS, USA ISSN: 0164-0313 DOI: 10.1007/S10894-007-9098-X cited in the application page 44, right-hand column, paragraph 2 - paragraph 3 -----	1-6

3

INTERNATIONAL SEARCH REPORT

Information on patent family members

International application No
PCT/US2010/043587

Patent document cited in search report	Publication date	Patent family member(s)	Publication date
US 4328070 A	04-05-1982	NONE	
US 2006198483 A1	07-09-2006	NONE	
US 4290848 A	22-09-1981	NONE	
US 4435354 A	06-03-1984	NONE	

PATENT COOPERATION TREATY

From the
INTERNATIONAL SEARCHING AUTHORITY

To:

see form PCT/ISA/220

PCT

WRITTEN OPINION OF THE INTERNATIONAL SEARCHING AUTHORITY

(PCT Rule 43*bis*.1)

Date of mailing
(day/month/year) see form PCT/ISA/210 (second sheet)

Applicant's or agent's file reference
see form PCT/ISA/220

FOR FURTHER ACTION
See paragraph 2 below

International application No.	International filing date *(day/month/year)*	Priority date *(day/month/year)*
PCT/US2010/043587	28.07.2010	29.07.2009

International Patent Classification (IPC) or both national classification and IPC
INV. G21B3/00 H05H1/02 H05H1/54

Applicant
GENERAL FUSION, INC.

1. This opinion contains indications relating to the following items:

- ☒ Box No. I Basis of the opinion
- ☐ Box No. II Priority
- ☐ Box No. III Non-establishment of opinion with regard to novelty, inventive step and industrial applicability
- ☐ Box No. IV Lack of unity of invention
- ☒ Box No. V Reasoned statement under Rule 43*bis*.1(a)(i) with regard to novelty, inventive step and industrial applicability; citations and explanations supporting such statement
- ☐ Box No. VI Certain documents cited
- ☒ Box No. VII Certain defects in the international application
- ☐ Box No. VIII Certain observations on the international application

2. **FURTHER ACTION**

If a demand for international preliminary examination is made, this opinion will usually be considered to be a written opinion of the International Preliminary Examining Authority ("IPEA") except that this does not apply where the applicant chooses an Authority other than this one to be the IPEA and the chosen IPEA has notifed the International Bureau under Rule 66.1*bis*(b) that written opinions of this International Searching Authority will not be so considered.

If this opinion is, as provided above, considered to be a written opinion of the IPEA, the applicant is invited to submit to the IPEA a written reply together, where appropriate, with amendments, before the expiration of 3 months from the date of mailing of Form PCT/ISA/220 or before the expiration of 22 months from the priority date, whichever expires later.

For further options, see Form PCT/ISA/220.

3. For further details, see notes to Form PCT/ISA/220.

Name and mailing address of the ISA:	Date of completion of this opinion	Authorized Officer
European Patent Office P.B. 5818 Patentlaan 2 NL-2280 HV Rijswijk - Pays Bas Tel. +31 70 340 - 2040 Fax: +31 70 340 - 3016	see form PCT/ISA/210	Capostagno, Eros Telephone No. +31 70 340-3221

WRITTEN OPINION OF THE INTERNATIONAL SEARCHING AUTHORITY

International application No.
PCT/US2010/043587

Box No. I Basis of the opinion

1. With regard to the **language**, this opinion has been established on the basis of:

   ☒ the international application in the language in which it was filed

   ☐ a translation of the international application into , which is the language of a translation furnished for the purposes of international search (Rules 12.3(a) and 23.1 (b)).

2. ☐ This opinion has been established taking into account the **rectification of an obvious mistake** authorized by or notified to this Authority under Rule 91 (Rule 43bis.1(a))

3. With regard to any **nucleotide and/or amino acid sequence** disclosed in the international application, this opinion has been established on the basis of a sequence listing filed or furnished:

   a. (means)

   ☐ on paper

   ☐ in electronic form

   b. (time)

   ☐ in the international application as filed

   ☐ together with the international application in electronic form

   ☐ subsequently to this Authority for the purposes of search

4. ☐ In addition, in the case that more than one version or copy of a sequence listing has been filed or furnished, the required statements that the information in the subsequent or additional copies is identical to that in the application as filed or does not go beyond the application as filed, as appropriate, were furnished.

5. Additional comments:

Box No. V Reasoned statement under Rule 43*bis*.1(a)(i) with regard to novelty, inventive step or industrial applicability; citations and explanations supporting such statement

1. Statement

Novelty (N)	Yes:	Claims	1-39
	No:	Claims	
Inventive step (IS)	Yes:	Claims	1-39
	No:	Claims	
Industrial applicability (IA)	Yes:	Claims	1-39
	No:	Claims	

2. Citations and explanations

   see separate sheet

Box No. VII Certain defects in the international application

The following defects in the form or contents of the international application have been noted:

see separate sheet

Re Item V

Reasoned statement with regard to novelty, inventive step or industrial applicability; citations and explanations supporting such statement

Reference is made to the following documents:

D1 DATABASE INSPEC [Online] THE INSTITUTION OF ELECTRICAL ENGINEERS, STEVENAGE, GB; June 2009 (2009-06) , HOWARD S ET AL: "Development of merged compact toroids for use as a magnetized target fusion plasma" XP002604406 Database accession no. 10986304 cited in the application ; & JOURNAL OF FUSION ENERGY SPRINGER NEW YORK USA, vol. 28, no. 2, 11 November 2008 (2008-11-11), pages 156-161, ISSN: 0164-0313 DOI: DOI:10.1007/S10894-008-9167-9 cited in the application

D2 US 4 328 070 A cited in the application

D3 US 2006/198483 A1 cited in the application

D4 DATABASE INSPEC [Online] THE INSTITUTION OF ELECTRICAL ENGINEERS, STEVENAGE, GB; 17 April 1995 (1995-04-17) , PETERKIN R E JR: "Direct electromagnetic acceleration of a compact toroid to high density and high speed" XP002604407 Database accession no. 4954951 ; & PHYSICAL REVIEW LETTERS USA, vol. 74, no. 16, 17 April 1995 (1995-04-17), pages 3165-3168, ISSN: 0031-9007

1 Document D1 is regarded as being the prior art closest to the subject-matter of claim 1, and it discloses (see the whole document; fig. 1, 3):

A system for compressing plasma, the system comprising

a plasma injector comprising a plasma formation system configured to generate a magnetized plasma; and

a plasma accelerator having a first portion, a second portion, and a longitudinal axis between the first portion and the second portion, the plasma accelerator configured to receive the magnetized plasma at the first portion and to accelerate the magnetized plasma along the longitudinal axis toward the second portion.

2 The subject-matter of claim 1 differs from this known system in that it further comprises

a liquid metal circulation system configured to provide liquid metal forming at least a portion of a chamber configured to receive the magnetized plasma from the second portion of the plasma accelerator, the magnetized plasma having a first pressure when received in the chamber; and

a projectile accelerator configured to accelerate a projectile along at least a portion of the longitudinal axis toward the chamber, wherein the system is configured such that the projectile compresses the magnetized plasma in the chamber, the compressed magnetized plasma having a second pressure that is greater than the first pressure.

The subject-matter of claim 1 is therefore new (Article 33(2) PCT).

3 The problem to be solved by the present invention may be regarded as to compress plasma in small-scale systems, using conventional methods and materials.

4 The solution to this problem proposed in claim 1 of the present application is considered as involving an inventive step (Article 33(3) PCT) for the following reasons:

It is known that the Magnetic Confinement Fusion (MCF) and the Inertial Confinement Fusion (ICF) are the present systems under development to obtain a controlled nuclear fusion. These systems require complex structures characterized by important technological and economical issues.

The Magnetized Target Fusion (MTF) constitutes a different approach to the nuclear fusion, combining features of both the other systems.

It appears to be quite practical in that the lower fuel density it requires can be created though a variety of processes that are relatively efficient and inexpensive, whereas the ICF approach demands specialized high-

performance drivers of low efficiency and high cost and complexity. Compared to the MCF approach, although also MTF requires magnetic confinement to stabilize and insulate the fuel while it is being compressed, the required confinement time is several times less than the MCF approach.

Other methods have been suggested for compressing a fusionable target to the high densities required to trigger the nuclei fusion, such as the impact of a hypervelocity "projectile" (see for example D2) or the convergence of ultrasonic waves (see for example D3). These methods however, do not produce satisfactory results.

The use of Compact Toroid (CT) accelerators has been suggested as well (see for example D1). In order to increase the density of the compressed plasma torus, it has also been suggested, in a general way, to focus the plasma torus to a reaction location, where a further compression can be produced by the impact of another object (see D4).

Nevertheless, the use of a gun placed on the axis of the conical focusing accelerator (CT) to accelerate a solid projectile against the compressed magnetized plasma torus is neither suggested, nor rendered obvious by, the available documents of the prior art.

The subject- matter of claim 1 can therefore be considered as involving an inventive step.

5 Independent claim 24 defines a method of compressing plasma by means of a system such as defined in claim 1.

Mutatis mutandis, the subject- matter of claim 24 is therefore new and inventive.

6 Independent claim 32 defines an apparatus for compressing plasma comprising a system such as defined in claim 1 with the addition of a control system.

Mutatis mutandis, the subject- matter of claim 32 is therefore new and inventive.

7 Claims 2-23, 25-31, 33-39 are dependent respectively on claims 1, 24 and 32 and as such also meet the requirements of the PCT with respect to novelty and inventive step.

Re. Item VII

8 Independent claims are not in the two-part form in accordance with Rule 6.3 (b) PCT, which in the present case would be appropriate, with those features known in combination from the prior art being placed in the preamble (Rule 6.3(b)(i) PCT) and the remaining features being included in the characterising part (Rule 6.3(b)(ii) PCT).

9 The features of the claims are not provided with reference signs placed in parentheses (Rule 6.2(b) PCT).

Possible steps after receipt of the international search report (ISR) and written opinion of the International Searching Authority (WO-ISA)

General information	For all international applications filed on or after 01/01/2004 the competent ISA will establish an ISR. It is accompanied by the WO-ISA. Unlike the former written opinion of the IPEA (Rule 66.2 PCT), the WO-ISA is not meant to be responded to, but to be taken into consideration for further procedural steps. This document explains about the possibilities.
Amending claims under Art. 19 PCT	Within 2 months after the date of mailing of the ISR and the WO-ISA the applicant may file amended claims under Art. 19 PCT directly with the International Bureau of WIPO. The PCT reform of 2004 did not change this procedure. For further information please see Rule 46 PCT as well as form PCT/ISA/220 and the corresponding Notes to form PCT/ISA/220.
Filing a demand for international preliminary examination	In principle, the WO-ISA will be considered as the written opinion of the IPEA. This should, in many cases, make it unnecessary to file a demand for international preliminary examination. If the applicant nevertheless wishes to file a demand this must be done before expiry of 3 months after the date of mailing of the ISR/ WO-ISA or 22 months after priority date, whichever expires later (Rule 54bis PCT). Amendments under Art. 34 PCT can be filed with the IPEA as before, normally at the same time as filing the demand (Rule 66.1 (b) PCT). If a demand for international preliminary examination is filed and no comments/amendments have been received the WO-ISA will be transformed by the IPEA into an IPRP (International Preliminary Report on Patentability) which would merely reflect the content of the WO-ISA. The demand can still be withdrawn (Art. 37 PCT).
Filing informal comments	After receipt of the ISR/WO-ISA the applicant may file informal comments on the WO-ISA directly with the International Bureau of WIPO. These will be communicated to the designated Offices together with the IPRP (International Preliminary Report on Patentability) at 30 months from the priority date. Please also refer to the next box.
End of the international phase	At the end of the international phase the International Bureau of WIPO will transform the WO-ISA or, if a demand was filed, the written opinion of the IPEA into the IPRP, which will then be transmitted together with possible informal comments to the designated Offices. The IPRP replaces the former IPER (international preliminary examination report).
Relevant PCT Rules and more information	Rule 43 PCT, Rule 43bis PCT, Rule 44 PCT, Rule 44bis PCT, PCT Newsletter 12/2003, OJ 11/2003, OJ 12/2003

Bitte beachten Sie, dass angeführte Nichtpatentliteratur (wie z. B. wissenschaftliche oder technische Dokumente) je nach geltendem Recht dem Urheberrechtsschutz und/oder anderen Schutzarten für schriftliche Werke unterliegen könnte. Die Vervielfältigung urheberrechtlich geschützter Texte, ihre Verwendung in anderen elektronischen oder gedruckten Publikationen und ihre Weitergabe an Dritte ist ohne ausdrückliche Zustimmung des Rechtsinhabers nicht gestattet.

Veuillez noter que les ouvrages de la littérature non-brevets qui sont cités, par exemple les documents scientifiques ou techniques, etc., peuvent être protégés par des droits d'auteur et/ou toute autre protection des écrits prévue par les législations applicables. Les textes ainsi protégés ne peuvent être reproduits ni utilisés dans d'autres publications électroniques ou imprimées, ni rediffusés sans l'autorisation expresse du titulaire du droit d'auteur.

Please be aware that cited works of non-patent literature such as scientific or technical documents or the like may be subject to copyright protection and/or any other protection of written works as appropriate based on applicable laws. Copyrighted texts may not be copied or used in other electronic or printed publications or re-distributed without the express permission of the copyright holder.

XS CPRTENFRDE

BNSDOCID: <XS_____2006100103CF_I_>

WHAT IS CLAIMED IS:

1. A system for compressing plasma, the system comprising:

a plasma injector comprising:

a plasma formation system configured to generate a magnetized plasma; and

a plasma accelerator having a first portion, a second portion, and a longitudinal axis between the first portion and the second portion, the plasma accelerator configured to receive the magnetized plasma at the first portion and to accelerate the magnetized plasma along the longitudinal axis toward the second portion;

a liquid metal circulation system configured to provide liquid metal forming at least a portion of a chamber configured to receive the magnetized plasma from the second portion of the plasma accelerator, the magnetized plasma having a first pressure when received in the chamber; and

a projectile accelerator configured to accelerate a projectile along at least a portion of the longitudinal axis toward the chamber,

wherein the system is configured such that the projectile compresses the magnetized plasma in the chamber, the compressed magnetized plasma having a second pressure that is greater than the first pressure.

2. The system of Claim 1, wherein the magnetized plasma comprises a compact toroid.

3. The system of Claim 2, wherein the compact toroid comprises a spheromak.

4. The system of Claim 1, wherein the plasma formation system comprises a formation electrode configured to ionize a gas in the plasma formation system to generate the magnetized plasma.

5. The system of Claim 4, wherein the plasma formation system comprises one or more coils configured to generate an initial magnetic field in the gas prior to ionization.

6. The system of Claim 1, wherein the plasma accelerator comprises an inner electrode and an outer electrode, at least one of the inner electrode and the outer electrode

configured with a taper to provide compression of the magnetized plasma as the magnetized plasma is accelerated along the longitudinal axis.

7. The system of Claim 6, wherein the plasma accelerator is configured to provide a compression factor greater than about two.

8. The system of Claim 1, wherein the projectile accelerator comprises a gas gun configured to accelerate the projectile using a pressurized gas.

9. The system of Claim 8, wherein the gas gun comprises a valve system configured to at least partially evacuate a region in front of the projectile.

10. The system of Claim 9, wherein the valve system is configured to be synchronized such that a high pressure region is maintained behind the projectile and a low pressure region is maintained in front of the projectile.

11. The system of Claim 1, wherein the projectile accelerator comprises an electromagnetic accelerator.

12. The system of Claim 1, wherein the projectile comprises a surface configured to confine the magnetized plasma in the chamber, the surface comprising a conical shape.

13. The system of Claim 12, wherein the conical shape is concave and has a cone angle in a range from about 20 degrees to about 80 degrees.

14. The system of Claim 1, wherein the projectile comprises a surface configured to confine the magnetized plasma in the chamber, the surface comprising an elongated member extending along a longitudinal axis of the projectile.

15. The system of Claim 1, wherein the projectile comprises a surface configured to confine the magnetized plasma in the chamber, the surface comprising one or more coatings, at least one of the coatings comprising lithium or lithium-deuteride.

16. The system of Claim 1, wherein the liquid metal comprises lead-lithium.

17. The system of Claim 1, wherein the liquid metal comprises a liquid phase of a metal material, and the projectile comprises a solid phase of the metal material.

18. The system of Claim 1, wherein the liquid metal circulation system comprises a pump system configured to provide a flow of liquid metal into a containment system, the flow configured to form at least a portion of the chamber.

19. The system of Claim 18, wherein the liquid metal circulation system comprises a tapered nozzle configured to output the flow of liquid metal.

20. The system of Claim 19, wherein the chamber in the liquid metal has a substantially conical shape.

21. The system of Claim 1, wherein the liquid metal circulation system comprises a heat exchanger configured to maintain the liquid metal at a desired temperature.

22. The system of Claim 1, further comprising a projectile recycling system configured to receive a portion of the liquid metal and to form one or more projectiles from the received portion of the liquid metal.

23. The system of Claim 22, wherein the projectile recycling system comprises a loading mechanism configured to automatically load a recycled projectile into the projectile accelerator.

24. A method of compressing a plasma, the method comprising:

generating a toroidal plasma;

accelerating the toroidal plasma toward a cavity in a liquid metal;

accelerating a projectile toward the cavity in the liquid metal; and

compressing the toroidal plasma with the projectile while the toroidal plasma is in the cavity in the liquid metal.

25. The method of Claim 24, wherein generating a toroidal plasma comprises generating a spheromak.

26. The method of Claim 24, wherein accelerating the toroidal plasma further comprises compressing the toroidal plasma.

27. The method of Claim 24, wherein accelerating the projectile comprises using high pressure gas to accelerate the projectile.

28. The method of Claim 24, wherein accelerating the projectile comprises using electromagnetic forces to accelerate the projectile.

29. The method of Claim 24, further comprising forming the cavity in the liquid metal.

30. The method of Claim 29, wherein forming the cavity comprises flowing a liquid metal to form the cavity.

31. The method of Claim 29, further comprising recycling a portion of the liquid metal to form at least one new projectile.

32. An apparatus for compressing plasma, the apparatus comprising:

a plasma injector configured to accelerate a compact toroid of plasma toward a cavity in a liquid metal, the cavity comprising a concave shape;

a projectile accelerator configured to accelerate a projectile toward the cavity; and

a timing system configured to coordinate acceleration of the compact toroid and acceleration of the projectile such that the projectile confines the compact toroid in the cavity in the liquid metal.

33. The apparatus of Claim 32, wherein the compact toroid comprises a spheromak.

34. The apparatus of Claim 32, wherein the plasma injector comprises at least one tapered electrode configured to compress the compact toroid during acceleration of the compact toroid.

35. The apparatus of Claim 32, wherein the projectile accelerator comprises a pneumatic gun.

36. The apparatus of Claim 32, wherein the projectile accelerator comprises an inductive coil gun.

37. The apparatus of Claim 32, wherein the timing system is configured to trigger formation of the compact toroid based at least in part on a position of the projectile relative to the cavity in the liquid metal.

38. The apparatus of Claim 32, further comprising a liquid metal circulation system configured to provide a flow of the liquid metal, the flow configured to form the cavity in the liquid metal.

39. The apparatus of Claim 38, further comprising a projectile recycling system configured to recycle a portion of the liquid metal to form at least one additional projectile.

UNITED STATES PATENT AND TRADEMARK OFFICE

UNITED STATES DEPARTMENT OF COMMERCE
United States Patent and Trademark Office
Address: COMMISSIONER FOR PATENTS
P.O. Box 1450
Alexandria, Virginia 22313-1450
www.uspto.gov

APPLICATION NO.	FILING DATE	FIRST NAMED INVENTOR	ATTORNEY DOCKET NO.	CONFIRMATION NO.
13/161,852	06/16/2011	Stephen James HOWARD	GENFUS.00GEN	6307

20995 7590 08/30/2011
KNOBBE MARTENS OLSON & BEAR LLP
2040 MAIN STREET
FOURTEENTH FLOOR
IRVINE, CA 92614

EXAMINER
KEITH, JACK W

ART UNIT	PAPER NUMBER
3663	

NOTIFICATION DATE	DELIVERY MODE
08/30/2011	ELECTRONIC

Please find below and/or attached an Office communication concerning this application or proceeding.

The time period for reply, if any, is set in the attached communication.

Notice of the Office communication was sent electronically on above-indicated "Notification Date" to the following e-mail address(es):

jcartee@kmob.com
efiling@kmob.com
eOAPilot@kmob.com

UNITED STATES PATENT AND TRADEMARK OFFICE

AUG 29 2011

Commissioner for Patents
United States Patent and Trademark Office
P.O. Box 1450
Alexandria, VA 22313-1450
www.uspto.gov

KNOBBE MARTENS OLSON & BEAR LLP
2040 MAIN STREET
FOURTEENTH FLOOR
IRVINE CA 92614

In re application of Howard et al. Application No. 13/161,852 Filed: June 16, 2011 For: SYSTEMS AND METHODS FOR PLASMA COMPRESSION WITH RECYCLING OF PROJECTILES	**DECISION ON REQUEST TO PARTICIPATE IN PATENT PROSECUTION HIGHWAY PROGRAM AND PETITION TO MAKE SPECIAL UNDER 37 CFR 1.102(a)**

This is a decision on the renewed request to participate in the Patent Prosecution Highway (PPH) program and the petition under 37 CFR 1.102(a), filed July 13 2011 to make the above-identified application special.

The request and petition are **GRANTED**.

A grantable request to participate in the PPH program and petition to make special require:

(1) The U.S. application must disclose an eligible relationship to one or more PCT applications filed in the EPO or USPTO;
(2) Applicant must submit a copy of the allowable/patentable claim(s) from the PCT application(s) latest international work product (the written opinion or the IPER) along with an English translation thereof and a statement that the English translation is accurate;
(3) All the claims in the U.S. application must sufficiently correspond or be amended to sufficiently correspond to the allowable/patentable claim(s) in the PCT application(s);
(4) Examination of the U.S. application has not begun;
(5) Applicant must submit a copy of the latest international work product from the PCT application containing the allowable/patentable claim(s) along with an English translation thereof and a statement that the English translation is accurate;
(6) Applicant must submit an IDS listing the documents cited by the PCT examiner in the international work product along with copies of documents except U.S. patents or U.S. patent application publications.

The request to participate in the PPH pilot program complies with the above requirements. Therefore, the above-identified application has been accorded "special" status.

All other inquiries concerning the examination or status of the application should be directed to the Patent Application Information Retrieval (PAIR) system.

The application is being forwarded to the examiner for action on the merits commensurate with this decision.

Any inquiry regarding this decision should be directed to Mikado Buiz, Quality Assurance Specialist, at (571) 272-6578.

/ Mikado Buiz /

Mikado Buiz,
Quality Assurance Specialist
Technology Center 3600

MB/MB: 8/29/11

UNITED STATES PATENT AND TRADEMARK OFFICE

Commissioner for Patents
United States Patent and Trademark Office
P.O. Box 1450
Alexandria, VA 22313-1450
www.uspto.gov

In re Application of
Sandeep Kulakcherla

Application No. 13161937

Filed:

Attorney Docket No. KON320N

:DECISION ON PETITION TO MAKE SPECIAL
:UNDER 37 CFR 1.102(c)(1)

This is a decision on the electronic petition under 37 CFR 1.102 (c)(1), filed 16-JUN-2011 to make the above-identified application special based on applicant's age as set forth in MPEP § 708.02, Section IV.

The petition is **GRANTED**.

A grantable petition to make an application special under 37 CFR 1.102(c)(1), MPEP § 708.02, Section IV: Applicant's Age must include a statement by applicant or a registered practitioner having evidence that applicant is at least 65 years of age. No fee is required.

Accordingly, the above-identified application has been accorded "special" status and will be taken up for action by the examiner upon the completion of all pre-examination processing.

Telephone inquiries concerning this electronic decision should be directed to the Electronic Business Center at 866-217-9197.

All other inquiries concerning either the examination or status of the application should be directed to the Technology Center.

Doc code : PET.OP.AGE
Description : Petition to make special based on Age/Health

PTO/SB/130 (07-09)
Approved for use through 07/31/2012. OMB 0651- 0031
U.S. Patent and Trademark Office; U.S. DEPARTMENT OF COMMERCE
Under the Paperwork Reduction Act of 1995, no persons are required to respond to a collection of information unless it contains a valid OMB control number

PETITION TO MAKE SPECIAL BASED ON AGE FOR ADVANCEMENT OF EXAMINATION UNDER 37 CFR 1.102(c)(1)

Application Information

Application Number	13161937	Confirmation Number	6479	Filing Date	2011-06-16
Attorney Docket Number (optional)	KON320N	Art Unit		Examiner	
First Named Inventor	Sandeep Kulakcherla				
Title of Invention	SYSTEM AND METHOD FOR BIOMETRIC ACOUSTIC NOISE REDUCTION				

Attention: Office of Petitions
An application may be made special for advancement of examination upon filing of a petition showing that the applicant is 65 years of age, or more. No fee is required with such a petition. See 37 CFR 1.102(c)(1) and MPEP 708.02 (IV).

APPLICANT HEREBY PETITIONS TO MAKE SPECIAL FOR ADVANCEMENT OF EXAMINATION IN THIS APPLICATION UNDER 37 CFR 1.102(c)(1) and MPEP 708.02 (IV) ON THE BASIS OF THE APPLICANT'S AGE.

A grantable petition requires one of the following items:
(1) Statement by one named inventor in the application that he/she is 65 years of age, or more; or
(2) Certification by a registered attorney/agent having evidence such as a birth certificate, passport, driver's license, etc. showing one named inventor in the application is 65 years of age, or more.

Name of Inventor who is 65 years of age, or older

Given Name	Middle Name	Family Name	Suffix
Alberto	D	Berstein	

A signature of the applicant or representative is required in accordance with 37 CFR 1.33 and 10.18.
Please see 37 CFR 1.4(d) for the format of the signature.

Select (1) or (2) :

○ (1) I am an inventor in this application and I am 65 years of age, or more.

◉ (2) I am an attorney or agent registered to practice before the Patent and Trademark Office, and I certify that I am in possession of evidence, and will retain such in the application file record, showing that the inventor listed above is 65 years of age, or more.

Signature	/Steve Nielsen, 54,699/	Date (YYYY-MM-DD)	2011-06-16
Name	Steven A. Nielsen	Registration Number	54699

PTO/SB/130 (07-09)
Approved for use through 07/31/2012. OMB 0651- 0031
U.S. Patent and Trademark Office; U.S. DEPARTMENT OF COMMERCE
Under the Paperwork Reduction Act of 1995, no persons are required to respond to a collection of information unless it contains a valid OMB control number

Privacy Act Statement

The Privacy Act of 1974 (P.L. 93-579) requires that you be given certain information in connection with your submission of the attached form related to a patent application or patent. Accordingly, pursuant to the requirements of the Act, please be advised that: (1) the general authority for the collection of this information is 35 U.S.C. 2(b)(2); (2) furnishing of the information solicited is voluntary; and (3) the principal purpose for which the information is used by the U.S. Patent and Trademark Office is to process and/or examine your submission related to a patent application or patent. If you do not furnish the requested information, the U.S. Patent and Trademark Office may not be able to process and/or examine your submission, which may result in termination of proceedings or abandonment of the application or expiration of the patent.

The information provided by you in this form will be subject to the following routine uses:

1. The information on this form will be treated confidentially to the extent allowed under the Freedom of Information Act (5 U.S.C. 552) and the Privacy Act (5 U.S.C. 552a). Records from this system of records may be disclosed to the Department of Justice to determine whether the Fr eedom of Information Act requires disclosure of these records.

2. A record from this system of records may be disclosed, as a routine use, in the course of presenting evidence to a court, magistrate, or administrative tribunal, including disclosures to opposing counsel in the course of settlement negotiations.

3. A record in this system of records may be disclosed, as a routine use, to a Member of Congress submitting a request involving an individual, to whom the record pertains, when the individual has requested assistance from the Member with respect to the subject matter of the record.

4. A record in this system of records may be disclosed, as a routine use, to a contractor of the Agency having need for the information in order to perform a contract. Recipients of information shall be required to comply with the requirements of the Privacy Act of 1974, as amended, pursuant to 5 U.S.C. 552a(m).

5. A record related to an International Application filed under the Patent Cooperation Treaty in this system of records may be disclosed, as a routine use, to the International Bureau of the World Intellectual Property Organization, pursuant to the Patent Cooperation Treaty.

6. A record in this system of records may be disclosed, as a routine use, to another federal agency for purposes of National Security review (35 U.S.C. 181) and for review pursuant to the Atomic Energy Act (42 U.S.C. 218(c)).

7. A record from this system of records may be disclosed, as a routine use, to the Administrator, General Services, or his/her designee, during an inspection of records conducted by GSA as part of that agency's responsibility to recommend improvements in records management practices and programs, under authority of 44 U.S.C. 2904 and 2906. Such disclosure shall be made in accordance with the GSA regulations governing inspection of records for this purpose, and any other relevant (i.e., GSA or Commerce) directive. Such disclosure shall not be used to make determinations about indivi duals.

8. A record from this system of records may be disclosed, as a routine use, to the public after either publication of the application pursuant to 35 U.S.C. 122(b) or issuance of a patent pursuant to 35 U.S.C. 151. Further, a record may be disclosed, subject to the limitations of 37 CFR 1.14, as a routine use, to the public if the record was filed in an application which became abandoned or in which the proceedings were terminated and which application is referenced by either a published application, an application open to public inspections or an issued patent.

9. A record from this system of records may be disclosed, as a routine use, to a Federal, State, or local law enforcement agency, if the USPTO becomes aware of a violation or potential violation of law or regulation.

UNITED STATES PATENT AND TRADEMARK OFFICE

Commissioner for Patents
United States Patent and Trademark Office
P.O. Box 1450
Alexandria, VA 22313-1450
www.uspto.gov

MAILED

AUG 15 2011

OFFICE OF PETITIONS

NIXON PEABODY, LLP
300 S. Riverside Plaza, 16th Floor
CHICAGO IL 60606-6613

In re Application of :
Tang et al. :
Application No. 13/162,001 : DECISION ACCORDING STATUS
Filed: June 16, 2011 : UNDER 37 CFR 1.47(a)
Attorney Docket No. **061397-000002USPX** :
For: **APPARATUS AND METHOD FOR COMMERCIAL TRANSACTIONS USING A COMMUNICATION DEVICE**

This is in response to the petition under 37 CFR 1.47(a), filed August 2, 2011.

The petition is **GRANTED**.

The above-identified application and papers have been reviewed and found in compliance with 37 CFR 1.47(a). This application is hereby accorded Rule 1.47(a) status.

The above-identified application was filed on July 21, 2010, without a properly executed oath or declaration. Accordingly, a "Notice to File Missing Parts Nonprovisional Application" (the "Notice") was mailed on July 1, 2011, requiring a properly executed oath or declaration and a surcharge for the late filing of the oath or declaration. The instant renewed was filed on August 2, 2011.

Petitioner has shown that inventor Mages has constructively refused join the prosecution of the application. The above-identified application and papers have been reviewed and found in compliance with 37 CFR 1.47(a). This application is hereby accorded Rule 1.47(a) status.

As provided in Rule 1.47(c), this Office will forward notice of this application's filing to the non-signing inventor at the address given in the petition. Notice of the filing of this application will also be published in the Official Gazette.

This application will be forwarded to the Office of Patent Application Processing for further processing.

Telephone inquiries concerning this decision should be directed to the undersigned at (571) 272-3222.

/Kenya A. McLaughlin/

Kenya A. McLaughlin
Petitions Attorney
Office of Petitions

UNITED STATES PATENT AND TRADEMARK OFFICE

Commissioner for Patents
United States Patent and Trademark Office
P.O. Box 1450
Alexandria, VA 22313-1450
www.uspto.gov

Kenneth Mages
730 S. Clark Street
Apt. 2709
Chicago, IL 60605

MAILED

AUG 15 2011

OFFICE OF PETITIONS

In re Application of :

Tang et al. :

Application No. 13/162,001 : LETTER

Filed: June 16, 2011 :

Attorney Docket No. **061397-000002USPX** :

For: **APPARATUS AND METHOD FOR COMMERCIAL TRANSACTIONS USING A COMMUNICATION DEVICE**

Dear Inventor Sir:

You are named as a joint inventor in the above-identified United States patent application filed under the provisions of 35 U.S.C. 116 (United States Code) and 37 CFR 1.47(a), Rules of Practice in Patent Cases. Should a patent be granted on the application you will be designated therein as a joint inventor.

As a joint inventor, you are entitled to inspect any paper in the file wrapper of the application, order copies of all or any part thereof (at a prepaid cost per 37 CFR 1.19) or make your position of record in the application. Alternatively, you may arrange to do any of the preceding through a registered patent attorney or agent presenting written authorization from you. If you care to join the application, counsel of record (see below) would presumably assist you. Joining in the application would entail the filing of an appropriate oath or declaration by you pursuant to 37 CFR 1.63.

Telephone inquiries regarding this communication should be directed to Petitions Attorney Kenya A. McLaughlin at (571) 272-3222. Requests for information regarding your application should be directed to the File Information Unit at (703) 308-2733. Information regarding how to pay for and order a copy of the application, or a specific paper in the application, should be directed to Certification Division at (703) 308-9726 or 1-800-972-6382 (outside the Washington D.C. area).

/Kenya A. McLaughlin/

Kenya A. McLaughlin
Petitions Attorney
Office of Petitions

NIXON PEABODY, LLP
300 S. Riverside Plaza, 16th Floor
CHICAGO IL 60606-6613

UNITED STATES PATENT AND TRADEMARK OFFICE

UNITED STATES DEPARTMENT OF COMMERCE
United States Patent and Trademark Office
Address: COMMISSIONER FOR PATENTS
P.O. Box 1450
Alexandria, Virginia 22313-1450
www.uspto.gov

APPLICATION NO.	FILING DATE	FIRST NAMED INVENTOR	ATTORNEY DOCKET NO.	CONFIRMATION NO.
13/162,016	06/16/2011	Ja Heon Koo	DAE10-01DIV	6633

58406 7590 07/27/2011
BARRY W. CHAPIN, ESQ.
CHAPIN INTELLECTUAL PROPERTY LAW, LLC
WESTBOROUGH OFFICE PARK
1700 WEST PARK DRIVE, SUITE 280
WESTBOROUGH, MA 01581

EXAMINER

ART UNIT	PAPER NUMBER
1744	

NOTIFICATION DATE	DELIVERY MODE
07/27/2011	ELECTRONIC

Please find below and/or attached an Office communication concerning this application or proceeding.

The time period for reply, if any, is set in the attached communication.

Notice of the Office communication was sent electronically on above-indicated "Notification Date" to the following e-mail address(es):

docket@chapin-ip-law.com

UNITED STATES PATENT AND TRADEMARK OFFICE

Commissioner for Patents
United States Patent and Trademark Office
P.O. Box 1450
Alexandria, VA 22313-1450
www.uspto.gov

CST

July 26, 2011

In re application of Ja Heon Koo Serial No. 13/162,016 Filed: June 16, 2011 For: NON-ADHESIVE ANTINOISE EARPLUG AND FABRICATION METHOD THEREOF	:	DECISION ON REQUEST TO PARTICIPATE IN PATENT PROSECUTION HIGHWAY PROGRAM AND PETITION TO MAKE SPECIAL UNDER 37 CFR 1.102(a)

This is a decision on the request to participate in the Patent Prosecution Highway (PPH) program, filed June 23, 2011.

The request and petition are **GRANTED**.

A grantable request to participate in the PPH program and petition to make special require:

(1) The U.S. application must validly claim priority under 35 U.S.C. 119(a) to one or more applications filed in the KIPO, note where the KIPO application with similar claims is not the same application from which the U.S. application claims priority that the applicant must identify the relationship between the KIPO application with similar claims and the KIPO priority application;

(2) Applicant must submit a copy of:
   a. The allowable/patentable claim(s) from the KIPO application(s) or if a copy of the allowable/patentable claims is available via the Dossier Access System (DAS) applicant may request the USPTO to obtain a copy from DAS; however, if the USPTO is unable to obtain a copy from the DAS, the applicant will be required to submit a copy;
   b. An English translation of the allowable/ patentable claim(s), if applicable; and
   c. A statement that the English translation is accurate, if applicable;

(3) Applicant must:
   a. Ensure all the claims in the U.S. application must sufficiently correspond or be amended to sufficiently correspond to the allowable/patentable claim(s) in the KIPO application(s); and
   b. Submit a claims correspondence table in English;

(4) Examination of the U.S. application has not begun;

(5) Applicant must submit:
   a. Documentation of prior office action:
      i. a copy of the office action(s) just prior to the "Decision to Grant a Patent" from each of the KIPO application(s) containing the allowable/patentable claims(s) or
      ii. if the allowable/patentable claim(s) are from "Notification of Reasons for Refusal" then the Notification of Reasons for Refusal or
      iii. if the KIPO application is a first action allowance then no office action from the KIPO is necessary should be indicated on the request/petition form:

      Further, if a copy of the documents from (i) or (ii) is available via the Dossier Access System (DAS), applicant may request the USPO obtain a copy from the DAS; however, if the USPTO is unable to obtain a copy of the DAS, the applicant will be required to submit a copy;
   b. An English language translation of the KIPO Office action from (5)(a)(i)-(ii) above if applicable; and
   c. A statement that the English translation is accurate; and

(6) Applicant must submit:
   a. An IDS listing the documents cited by the KIPO examiner in the KIPO office action (unless already submitted in this application)
   b. Copies of documents except U.S. patents or U.S. patent application publications (unless already submitted in this application).

The request to participate in the PPH program and petition comply with the above requirements. Accordingly, the above-identified application has been accorded "special" status.

The application is being forwarded to the examiner for action on the merits commensurate with this decision.

Any inquiry regarding this decision should be directed to Christine Tierney, Quality Assurance Specialist, at (571) 272-1055.

All other inquiries concerning the examination or status of the application is accessible in the PAIR system at http://www.uspto.gov/ebc/index.html.

/Christine Tierney/

Christine Tierney
Quality Assurance Specialist
Technology Center 1700

UNITED STATES PATENT AND TRADEMARK OFFICE

UNITED STATES DEPARTMENT OF COMMERCE
United States Patent and Trademark Office
Address: COMMISSIONER FOR PATENTS
P.O. Box 1450
Alexandria, Virginia 22313-1450
www.uspto.gov

APPLICATION NO.	FILING DATE	FIRST NAMED INVENTOR	ATTORNEY DOCKET NO.	CONFIRMATION NO.
13/162,197	06/16/2011	Kazuhiko TAKAHASHI	149878	7023

7590 09/29/2011

Oliff & Berridge, PLC
Suite 500
277 South Washington Street
Alexandria, VA 22314

EXAMINER

ART UNIT	PAPER NUMBER
3739	

MAIL DATE	DELIVERY MODE
09/29/2011	PAPER

Please find below and/or attached an Office communication concerning this application or proceeding.

The time period for reply, if any, is set in the attached communication.

UNITED STATES PATENT AND TRADEMARK OFFICE

Commissioner for Patents
United States Patent and Trademark Office
P.O. Box 1450
Alexandria, VA 22313-1450
www.uspto.gov

Oliff & Berridge, PLC
Suite 500
277 South Washington Street
Alexandria VA 22314

In re Application of	:	
TAKAHASHI, KAZUHIKO	:	DECISION ON REQUEST TO
Application No. 13/162,197	:	PARTICIPATE IN PATENT
Filed: June 16, 2011	:	PCT/PROSECUTION HIGHWAY
Attorney Docket No. 149878	:	PROGRAM AND PETITION
For: ENDOSCOPE DEVICE	:	TO MAKE SPECIAL UNDER
	:	37 CFR 1.102(a)

This is a decision on the request to participate in the Patent Prosecution Highway (PPH) program and the petition under 37 CFR 1.102(a), filed September 22, 2011 to make the above-identified application special.

The request and petition are granted.

A grantable request to participate in the PPH pilot program and petition to make special require:

(1) The U.S. application must validly claim priority under 35 U.S.C. 119(a) to one or more applications filed in the JPO;
(2) Applicant must submit a copy of the allowable/patentable claim(s) from the JPO/PCT application(s) along with an English translation thereof and a statement that the English translation is accurate;
(3) All the claims in the U.S. application must sufficiently correspond or be amended to sufficiently correspond to the allowable/patentable claim(s) in the JPO application(s);
(4) Examination of the U.S. application has not begun;
(5) Applicant must submit a copy of all the office actions from each of the JPO/PCT application(s) containing the allowable/patentable claim(s) along with an English translation thereof and a statement that the English translation is accurate; and
(6) Applicant must submit an IDS listing the documents cited by the JPO examiner in the JPO office action along with copies of documents except U.S. patents or U.S. patent application publications.
In light of the petition being properly submitted, the request to participate in the PPH program and the petition comply with the above requirements. Accordingly, the above-identified application has been accorded "special" status.

The applicant is encouraged to cite and submit all relevant prior art references, if any, to facilitate examination in this application. Upon completion of pre-examination processing, this application will be forwarded to an examiner for examination.

Telephone inquiries concerning this decision should be directed to Henry C. Yuen at 571-272-4485. All other inquiries concerning the examination or status of the application should be directed to Linda Dvorak, SPE of Art Unit 3739, and 571-272-4764 for Class 600 and also accessible in the PAIR system at http://www.uspto.gov/ebc.index.html.

Petition is **granted**.

/Henry C. Yuen/

Henry C. Yuen, Special Programs Examiner
Technology Center 3700 – Mechanical Engineering,
Manufacturing and Products
571-272-4856

UNITED STATES PATENT AND TRADEMARK OFFICE

Commissioner for Patents
United States Patent and Trademark Office
P.O. Box 1450
Alexandria, VA 22313-1450
www.uspto.gov

MAILED

NOV 21 2011

OFFICE OF PETITIONS

David Chen
IP Attorneys Group, LLC
57 Plains Road, Suite 3A
Milford CT 06461

In re Application of
McCluskey, et al.
Application No. 13/162,272
Filed: June 16, 2011
Atty. Dkt. No.: DIVE110020000

: DECISION REFUSING STATUS
: UNDER 37 CFR 1.47(a)

This decision is in response to the petition under 37 CFR 1.47(a) filed October 7, 2011.

The petition under 37 CFR 1.47(a) is **DISMISSED**.

Petitioners are given TWO MONTHS from the mailing date of this decision to reply, correcting the below-noted deficiencies. Any reply should be entitled "Request for Reconsideration of Petition Under 37 CFR 1.47(a)," and should only address the deficiencies noted herein. The reply under 37 CFR 1.47(a) may include an oath or declaration executed by the non-signing inventors. Any extensions of time will be governed by 37 CFR 1.136(a).

The above-identified application was filed June 16, 2011 without an executed oath or declaration. Accordingly, a Notice to File Missing Parts of Nonprovisional Application (Notice) was mailed August 8, 2011. The Notice required, *inter alia*, a surcharge and an executed oath or declaration.

A grantable petition under 37 CFR 1.47(a) requires: (1) proof that the non-signing inventor cannot be reached or refuses to sign the oath or declaration after having been presented with the application papers (specification, claims and drawings); (2) an acceptable oath or declaration in compliance with 35 U.S.C. §§ 115 and 116; (3) the petition fee; and (4) a statement of the last known address of the non-signing inventor.

The instant petition fails to satisfy requirement (1) set forth above. Petitioners have failed to establish that the non-signing inventors received a complete copy of the instant application papers (specification, including claims, drawings, and oath or declaration) and thereafter refused to execute an oath or declaration, or, that the non-signing inventors cannot be reached or located for presentation of the application papers.

Petitioners assert that the non-signing inventor verbally expressed an unwillingness to sign the "enclosed" declaration.

Petitioners are required to establish that the non-signing inventor received a complete copy of the instant application before a refusal to sign an oath or declaration can be alleged. It must be demonstrated that a *bona fide* effort has been made to present a complete copy of the instant

application papers (specification, including claims, drawings, and oath or declaration) to the non-signing inventor at the non-signing inventor's last known address, typically a residential address.

The petition and supporting documentation have been carefully reviewed, but are not found persuasive. There is no indication in the documents presented that the non-signing inventor received a complete copy of the application papers prior to the refusing to sign or an expressing an unwillingness to sign the necessary oath or declaration.

Any renewed petition should be accompanied by evidence to establish that the non-signing inventors was sent a complete copy of the application papers (specification, claims, drawings, and oath or declaration) and thereafter refused to execute the declaration. Petitioners may wish to provide the Office copies of letters sent to the inventors indicating the enclosure of the application papers (specification, claims, drawings, and oath or declaration). If after the inventors receives the application papers and requests to execute the oath or declaration are refused, these facts should be set forth in a statement of facts signed by the person to whom the refusals were made and detailing with specificity the exact manner of the refusals. If a written refusal has been made, a copy of the written refusal should be included on renewed petition.

Further correspondence with respect to this matter should be addressed as follows:

By mail:	Mail Stop Petition Commissioner for Patents P.O. Box 1450 Alexandria, VA 22313-1450
By facsimile:	(571) 273-8300
By hand:	U.S. Patent and Trademark Office Customer Service Window Mail Stop Petition Randolph Building 401 Dulany Street Alexandria, VA 22314

Telephone inquiries related to this decision may be directed to the undersigned at (571) 272-3205.

/ALESIA M. BROWN/

Alesia M. Brown
Attorney Advisor
Office of Petitions

UNITED STATES PATENT AND TRADEMARK OFFICE

UNITED STATES DEPARTMENT OF COMMERCE
United States Patent and Trademark Office
Address: COMMISSIONER FOR PATENTS
P.O. Box 1450
Alexandria, Virginia 22313-1450
www.uspto.gov

APPLICATION NO.	FILING DATE	FIRST NAMED INVENTOR	ATTORNEY DOCKET NO.	CONFIRMATION NO.
13/162,357	06/16/2011	Wuri Andarmawanti Hapsari	17470/091002	7306

22511 7590 07/19/2011
OSHA LIANG L.L.P.
TWO HOUSTON CENTER
909 FANNIN, SUITE 3500
HOUSTON, TX 77010

EXAMINER

ART UNIT	PAPER NUMBER
2617	

NOTIFICATION DATE	DELIVERY MODE
07/19/2011	ELECTRONIC

Please find below and/or attached an Office communication concerning this application or proceeding.

The time period for reply, if any, is set in the attached communication.

Notice of the Office communication was sent electronically on above-indicated "Notification Date" to the following e-mail address(es):

docketing@oshaliang.com
hathaway@oshaliang.com
kennedy@oshaliang.com

UNITED STATES PATENT AND TRADEMARK OFFICE

Commissioner for Patents
United States Patent and Trademark Office
P.O. Box 1450
Alexandria, VA 22313-1450
www.uspto.gov

OSHA LIANG L.L.P.
TWO HOUSTON CENTER
909 FANNIN, SUITE 3500
HOUSTON TX 77010

In re Application of	**: DECISION ON REQUEST TO**
HAPSARI et al.	**: PARTICIPATE IN THE PATENT**
Application No.: 13/162,357	**: PROSECUTION HIGHWAY**
Filed: 16 June 2011	**: PROGRAM AND PETITION**
Attorney Docket No.: 17470/091002	**: TO MAKE SPECIAL UNDER**
For: MOBILE COMMUNICATION	**: 37 CFR 1.102(a)**
METHOD AND MOBILE STATION	

This is a decision on the request to participate in the Patent Prosecution Highway (PPH) program and the petition under 37 CFR 1.102(a), filed 17 June 2011, to make the above-identified application special.

The request and petition are **GRANTED**.

Discussion

A grantable request to participate in the PPH pilot program and petition to make special require:

1. The U.S. application is
    a. a Paris Convention application which either
        i. validly claims priority under 35 U.S.C. 119(a) and 37 CFR 1.55 to one or more applications filed in the JPO, or
        ii. validly claims priority to a PCT application that contains no priority claims, or
    b. a national stage application under the PCT (an application which entered the national stage in the U.S. from a PCT international application after compliance with 35 U.S.C. 371), which PCT application
        i. validly claims priority to an application filed in the JPO, or
        ii. validly claims priority to a PCT application that contains no priority claims, or
        iii. contains no priority claim, or
    c. a so-called bypass application filed under 35 U.S.C. 111(a) which validly claims benefit under 35 U.S.C. 120 to a PCT application, which PCT application
        i. validly claims priority to an application filed in the JPO, or
        ii. validly claims priority to a PCT application that contains no priority claims, or

iii. contains no priority claim;

2. Applicant must submit a copy of:
   a. The allowable/patentable claim(s) from the JPO application(s);
   b. An English translation of the allowable/patentable claim(s) and
   c. A statement that the English translation is accurate;
3. Applicant must:
   a. Ensure all the claims in the U.S. application must sufficiently correspond or be amended to sufficiently correspond to the allowable/patentable claim(s) in the JPO application(s) and
   b. Submit a claims correspondence table in English;
4. Examination of the U.S. application has not begun;
5. Applicant must submit:
   a. Documentation of prior office action:
      i. a copy of the office action(s) just prior to the "Decision to Grant a Patent" from each of the JPO application(s) containing the allowable/patentable claim(s) or
      ii. if the allowable/patentable claims(s) are from a "Notification of Reasons for Refusal" then the Notification of Reasons for Refusal or
      iii. if the JPO application is a first action allowance then no office action from the JPO is necessary should be indicated on the request/petition form;
   b. An English language translation of the JPO Office action from (5)(a)(i)-(ii) above
   c. A statement that the English translation is accurate;
6. Applicant must submit:
   a. An IDS listing the documents cited by the JPO examiner in the JPO office action (unless already submitted in this application)
   b. Copies of the documents except U.S. patents or U.S. patent application publications (unless already submitted in this application);

The request to participate in the PPH pilot program and petition comply with the above requirements. Accordingly, the above-identified application has been accorded "special" status.

Inquiries concerning this decision should be directed to Lee W. Young at 571-272-4549.

All other inquiries concerning the examination or status of the application is accessible in the PAIR system at http://www.uspto.gov/ebc.index.html.

This application will be forwarded to the examiner for action on the merits commensurate with this decision once this application's formality reviews have been completed.

Lee W. Young
TQAS, Technology Center 2600

UNITED STATES PATENT AND TRADEMARK OFFICE

Commissioner for Patents
United States Patent and Trademark Office
P.O. Box 1450
Alexandria, VA 22313-1450
www.uspto.gov

ANATOLY S. WEISER
3525 DEL MAR HEIGHTS ROAD, #295
SAN DIEGO CA 92130

MAILED
JUL 05 2011
OFFICE OF PETITIONS

In re Application of	:	
LEAHY et al.	:	
Application No. 13/162,540	:	LETTER
Filed: 06/16/2011	:	
Attorney Docket No. Worlds007	:	

This is in response to the petition under 37 CFR 1.47(a), filed June 16, 2011.

In accordance with 37 CFR 1.63(d), petitioner submitted a copy of the executed declaration filed in Application No. 08/747,420. The present application is a continuation of Application No. 12/406,968, filed March 19, 2009, which is a continuation of Application No. 12/353,218 filed January 13, 2009, now Patent No. 7,945,856, which is a continuation of Application No. 11/591,878 filed November 2, 2006, now Patent No. 7,493,558, which is a continuation of Application No. 09/632,154 filed August 3, 2000, now Patent No. 7,181,690, which is a continuation of Application No. 08/747,420 filed November 12, 1996, now Patent No. 6,219,045. Additionally, petitioner submitted a copy of the decision, mailed on September 19, 2000, granting a petition under 37 CFR 1.47(a) in prior Application No. 08/747,420.

As § 1.47(a) status was granted in the prior application, this application is hereby accorded § 1.47(a) status.

The present petition is **dismissed** as involving a moot issue because a petition is unnecessary to accord § 1.47(a) status in this application. As provided in 37 CFR 1.47(c), the Office is dispensing with the notice provision in this application because the Office provided notice to the non-signing inventor regarding the § 1.47(a) status in the prior application.

Telephone inquiries related to this decision may be directed to the undersigned at (571) 272-3211.

C. T. Donnell

Christina Tartera Donnell
Senior Petitions Attorney
Office of Petitions

Doc code : PET.OP.AGE
Description : Petition to make special based on Age/Health

PTO/SB/130 (07-09)
Approved for use through 07/31/2012. OMB 0651- 0031
U.S. Patent and Trademark Office; U.S. DEPARTMENT OF COMMERCE
Under the Paperwork Reduction Act of 1995, no persons are required to respond to a collection of information unless it contains a valid OMB control number

PETITION TO MAKE SPECIAL BASED ON AGE FOR ADVANCEMENT OF EXAMINATION UNDER 37 CFR 1.102(c)(1)

Application Information

Application Number	13162666	Confirmation Number	7999	Filing Date	2011-06-17
Attorney Docket Number (optional)	5249-0003	Art Unit	3753	Examiner	
First Named Inventor	George Carter				
Title of Invention	Universal Subsea Oil Containment System and Method				

Attention: Office of Petitions
An application may be made special for advancement of examination upon filing of a petition showing that the applicant is 65 years of age, or more. No fee is required with such a petition. See 37 CFR 1.102(c)(1) and MPEP 708.02 (IV).

APPLICANT HEREBY PETITIONS TO MAKE SPECIAL FOR ADVANCEMENT OF EXAMINATION IN THIS APPLICATION UNDER 37 CFR 1.102(c)(1) and MPEP 708.02 (IV) ON THE BASIS OF THE APPLICANT'S AGE.

A grantable petition requires one of the following items:
(1) Statement by one named inventor in the application that he/she is 65 years of age, or more; or
(2) Certification by a registered attorney/agent having evidence such as a birth certificate, passport, driver's license, etc. showing one named inventor in the application is 65 years of age, or more.

Name of Inventor who is 65 years of age, or older

Given Name	Middle Name	Family Name	Suffix
George		Carter	

A signature of the applicant or representative is required in accordance with 37 CFR 1.33 and 10.18.
Please see 37 CFR 1.4(d) for the format of the signature.

Select (1) or (2) :

○ (1) I am an inventor in this application and I am 65 years of age, or more.

● (2) I am an attorney or agent registered to practice before the Patent and Trademark Office, and I certify that I am in possession of evidence, and will retain such in the application file record, showing that the inventor listed above is 65 years of age, or more.

Signature	/michaeldiaz/	Date (YYYY-MM-DD)	2012-02-23
Name	Michael Diaz	Registration Number	40588

PTO/SB/130 (07-09)
Approved for use through 07/31/2012. OMB 0651- 0031
U.S. Patent and Trademark Office; U.S. DEPARTMENT OF COMMERCE
Under the Paperwork Reduction Act of 1995, no persons are required to respond to a collection of information unless it contains a valid OMB control number

Privacy Act Statement

The Privacy Act of 1974 (P.L. 93-579) requires that you be given certain information in connection with your submission of the attached form related to a patent application or patent. Accordingly, pursuant to the requirements of the Act, please be advised that: (1) the general authority for the collection of this information is 35 U.S.C. 2(b)(2); (2) furnishing of the information solicited is voluntary; and (3) the principal purpose for which the information is used by the U.S. Patent and Trademark Office is to process and/or examine your submission related to a patent application or patent. If you do not furnish the requested information, the U.S. Patent and Trademark Office may not be able to process and/or examine your submission, which may result in termination of proceedings or abandonment of the application or expiration of the patent.

The information provided by you in this form will be subject to the following routine uses:

1. The information on this form will be treated confidentially to the extent allowed under the Freedom of Information Act (5 U.S.C. 552) and the Privacy Act (5 U.S.C. 552a). Records from this system of records may be disclosed to the Department of Justice to determine whether the Fr eedom of Information Act requires disclosure of these records.

2. A record from this system of records may be disclosed, as a routine use, in the course of presenting evidence to a court, magistrate, or administrative tribunal, including disclosures to opposing counsel in the course of settlement negotiations.

3. A record in this system of records may be disclosed, as a routine use, to a Member of Congress submitting a request involving an individual, to whom the record pertains, when the individual has requested assistance from the Member with respect to the subject matter of the record.

4. A record in this system of records may be disclosed, as a routine use, to a contractor of the Agency having need for the information in order to perform a contract. Recipients of information shall be required to comply with the requirements of the Privacy Act of 1974, as amended, pursuant to 5 U.S.C. 552a(m).

5. A record related to an International Application filed under the Patent Cooperation Treaty in this system of records may be disclosed, as a routine use, to the International Bureau of the World Intellectual Property Organization, pursuant to the Patent Cooperation Treaty.

6. A record in this system of records may be disclosed, as a routine use, to another federal agency for purposes of National Security review (35 U.S.C. 181) and for review pursuant to the Atomic Energy Act (42 U.S.C. 218(c)).

7. A record from this system of records may be disclosed, as a routine use, to the Administrator, General Services, or his/her designee, during an inspection of records conducted by GSA as part of that agency's responsibility to recommend improvements in records management practices and programs, under authority of 44 U.S.C. 2904 and 2906. Such disclosure shall be made in accordance with the GSA regulations governing inspection of records for this purpose, and any other relevant (i.e., GSA or Commerce) directive. Such disclosure shall not be used to make determinations about indivi duals.

8. A record from this system of records may be disclosed, as a routine use, to the public after either publication of the application pursuant to 35 U.S.C. 122(b) or issuance of a patent pursuant to 35 U.S.C. 151. Further, a record may be disclosed, subject to the limitations of 37 CFR 1.14, as a routine use, to the public if the record was filed in an application which became abandoned or in which the proceedings were terminated and which application is referenced by either a published application, an application open to public inspections or an issued patent.

9. A record from this system of records may be disclosed, as a routine use, to a Federal, State, or local law enforcement agency, if the USPTO becomes aware of a violation or potential violation of law or regulation.

UNITED STATES PATENT AND TRADEMARK OFFICE

Commissioner for Patents
United States Patent and Trademark Office
P.O. Box 1450
Alexandria, VA 22313-1450
www.uspto.gov

In re Application of
George Carter

Application No. 13162666

Filed: June 17,2011

Attorney Docket No. 5249-0003

:DECISION ON PETITION TO MAKE SPECIAL
:UNDER 37 CFR 1.102(c)(1)

This is a decision on the electronic petition under 37 CFR 1.102 (c)(1), filed 23-FEB-2012 to make the above-identified application special based on applicant's age as set forth in MPEP § 708.02, Section IV.

The petition is **GRANTED**.

A grantable petition to make an application special under 37 CFR 1.102(c)(1), MPEP § 708.02, Section IV: Applicant's Age must include a statement by applicant or a registered practitioner having evidence that applicant is at least 65 years of age. No fee is required.

Accordingly, the above-identified application has been accorded "special" status and will be taken up for action by the examiner upon the completion of all pre-examination processing.

Telephone inquiries concerning this electronic decision should be directed to the Electronic Business Center at 866-217-9197.

All other inquiries concerning either the examination or status of the application should be directed to the Technology Center.

UNITED STATES PATENT AND TRADEMARK OFFICE

Commissioner for Patents
United States Patent and Trademark Office
P.O. Box 1450
Alexandria, VA 22313-1450
www.uspto.gov

INTERNATIONAL PAPER COMPANY
6285 TRI-RIDGE BOULEVARD
LOVELAND OH 45140

MAILED
SEP 08 2011
OFFICE OF PETITIONS

In re Application of	:	
Nguyen	:	
Application No. 13/162,667	:	ON PETITION
Deposited: June 17, 2011	:	
Attorney Docket No. COM-037148-N2	:	

This is in response to the "PETITION UNDER 37 C.F.R. 1.57(A)(3) AND PRELIMINARY AMENDMENT" filed August 30, 2011, requesting that the above-referenced application be accorded a filing date of June 17, 2011. This petition is being treated pursuant to 37 CFR 1.53(e)(2)[1].

Application papers in the above-identified application were deposited on June 17, 2011. However, on June 30, 2011, the Office of Patent Application Processing mailed applicant a "Notice of Incomplete Nonprovisional Application," notifying applicant that the application papers had not been accorded a filing date because the application was deposited without drawings. In response, applicant timely filed this petition. Applicant requests that the application be amended to include the inadvertently omitted drawings on the basis that the application as filed contained a prior benefit claim under 37 CFR 1.55 or 1.78.

Petitioner's arguments and evidence have been considered. However, a review of the application confirms that, as filed, the application contained at least one process claim. MPEP 601.01(f) provides that:

> It has been USPTO practice to treat an application that contains at least one process or method claim as an application for which a drawing is not necessary for an understanding of the invention under 35 U.S.C. 113 (first sentence).

Thus, pursuant to § 601.01(f), a drawing is not considered essential for a filing date. The instant application is entitled to a filing date without drawings present in the application.

Accordingly, the Office should have granted the application a filing date and mailed a Notice of Omitted Items instead of a Notice of Incomplete Nonprovisional Application. As stated in

[1] Any request for review of a notification pursuant to paragraph (e)(1) of this section, or a notification that the original application papers lack a portion of the specification or drawing(s), must be by way of a petition pursuant to this paragraph accompanied by the fee set forth in § 1.17(f). In the absence of a timely (§ 1.181(f)) petition pursuant to this paragraph, the filing date of an application in which the applicant was notified of a filing error pursuant to paragraph (e)(1) of this section will be the date the filing error is corrected.

MPEP 601.01(g) under the section entitled, "Application Entitled to a Filing Date," applicant may submit an amendment to include the inadvertently omitted portion of the drawing(s) pursuant to 37 CFR 1.57(a):

> [i]f an application was filed on or after September 21, 2004, and contains a claim under 37 CFR 1.55 for priority of a prior-filed foreign application, or a claim under 37 CFR 1.78 for the benefit of a prior-filed provisional, nonprovisional, or international application that was present on the filing date of the application, and the omitted portion of the drawing(s) was inadvertently omitted from the application and is completely contained in the prior-filed application[.]

Please note that no petition is required and that the amendment must comply with 37 CFR 1.57(a) and 37 CFR 1.121. See MPEP § 201.17. Any amendment to include the inadvertently omitted drawing(s) will be considered by the examiner.

To the extent the instant petition requests a filing date of June 17, 2011 with no drawings present in the application, the petition is **GRANTED**.

Given the basis for granting this petition, the petition fee is being refunded.

Pursuant to this decision, the application will be referred to Office of Patent Application Processing for:

- **correction of the filing date to June 17, 2011**;
- **for indication in Office records, as appropriate, that "0" sheets of drawings were present on filing** and
- **for issuance of a filing receipt.**

Entry of the amendment filed August 30, 2011 will be determined by the examiner.

Telephone inquiries concerning this matter may be directed to the undersigned at (571) 272-3230.

Shirene Willis Brantley

Shirene Willis Brantley
Senior Petitions Attorney
Office of Petitions

UNITED STATES PATENT AND TRADEMARK OFFICE

Commissioner for Patents
United States Patent and Trademark Office
P.O. Box 1450
Alexandria, VA 22313-1450
www.uspto.gov

INTERNATIONAL PAPER COMPANY
6285 TRI-RIDGE BOULEVARD
LOVELAND OH 45140

MAILED
SEP 19 2011
OFFICE OF PETITIONS

In re Application of	:	
Skaggs, et al.	:	
Application No. 13/162,714	:	ON PETITION
Deposited: June 17, 2011	:	
Attorney Docket No. TEC-032263-N2	:	

This is in response to the "PETITION UNDER 37 C.F.R. 1.57(a)(3) and Preliminary Amendment" filed September 6, 2011, requesting that the above-referenced application be accorded a filing date of June 17, 2011. This petition is being treated pursuant to 37 CFR 1.53(e)(2)[1].

Application papers in the above-identified application were deposited on June 17, 2011. However, on July 5, 2011, the Office of Patent Application Processing mailed applicants a "Notice of Incomplete Nonprovisional Application," notifying applicants that the application papers had not been accorded a filing date because the application was deposited without drawings. In response, applicants timely filed this petition. Applicants request that the application be amended to include the inadvertently omitted drawings on the basis that the application as filed contained a prior benefit claim under 37 CFR 1.55 or 1.78.

Petitioners' arguments and evidence have been considered. However, a review of the application confirms that, as filed, the application contained at least one process claim. MPEP 601.01(f) provides that:

> It has been USPTO practice to treat an application that contains at least one process or method claim as an application for which a drawing is not necessary for an understanding of the invention under 35 U.S.C. 113 (first sentence).

Thus, pursuant to § 601.01(f), a drawing is not considered essential for a filing date. The instant application is entitled to a filing date without drawings present in the application.

Accordingly, the Office should have granted the application a filing date and mailed a Notice of Omitted Items instead of a Notice of Incomplete Nonprovisional Application. As stated in

[1] Any request for review of a notification pursuant to paragraph (e)(1) of this section, or a notification that the original application papers lack a portion of the specification or drawing(s), must be by way of a petition pursuant to this paragraph accompanied by the fee set forth in § 1.17(f). In the absence of a timely (§ 1.181(f)) petition pursuant to this paragraph, the filing date of an application in which the applicant was notified of a filing error pursuant to paragraph (e)(1) of this section will be the date the filing error is corrected.

MPEP 601.01(g) under the section entitled, "Application Entitled to a Filing Date," applicant may submit an amendment to include the inadvertently omitted portion of the drawing(s) pursuant to 37 CFR 1.57(a):

> [i]f an application was filed on or after September 21, 2004, and contains a claim under 37 CFR 1.55 for priority of a prior-filed foreign application, or a claim under 37 CFR 1.78 for the benefit of a prior-filed provisional, nonprovisional, or international application that was present on the filing date of the application, and the omitted portion of the drawing(s) was inadvertently omitted from the application and is completely contained in the prior-filed application[.]

Please note that no petition is required and that the amendment must comply with 37 CFR 1.57(a) and 37 CFR 1.121. See MPEP § 201.17. Any amendment to include the inadvertently omitted drawing(s) will be considered by the examiner.

To the extent the instant petition requests a filing date of June 17, 2011 with no drawings present in the application, the petition is **GRANTED**.

Given the basis for granting this petition, the petition fee is being refunded.

Pursuant to this decision, the application will be referred to Office of Patent Application Processing for:

X **correction of the filing date to June 17, 2011**;
X **for indication in Office records, as appropriate, that "0" sheets of drawings were present on filing** and
X **for issuance of a filing receipt.**

Entry of the amendment filed September 6, 2011 will be determined by the examiner.

Telephone inquiries concerning this matter may be directed to the undersigned at (571) 272-3230.

Shirene Willis Brantley
Senior Petitions Attorney
Office of Petitions

Doc code : PET.OP.AGE
Description : Petition to make special based on Age/Health

PTO/SB/130 (07-09)
Approved for use through 07/31/2012. OMB 0651- 0031
U.S. Patent and Trademark Office; U.S. DEPARTMENT OF COMMERCE
Under the Paperwork Reduction Act of 1995, no persons are required to respond to a collection of information unless it contains a valid OMB control number

PETITION TO MAKE SPECIAL BASED ON AGE FOR ADVANCEMENT OF EXAMINATION UNDER 37 CFR 1.102(c)(1)

Application Information

Application Number	13163145	Confirmation Number	9052	Filing Date	2011-06-17
Attorney Docket Number (optional)	IMM310US8	Art Unit	1618	Examiner	Jones, Dameron Levest
First Named Inventor	William J. McBride				
Title of Invention	Methods and Compositions for F-18 Labeling of Proteins, Peptides and Other Molecules				

Attention: Office of Petitions
An application may be made special for advancement of examination upon filing of a petition showing that the applicant is 65 years of age, or more. No fee is required with such a petition. See 37 CFR 1.102(c)(1) and MPEP 708.02 (IV).

APPLICANT HEREBY PETITIONS TO MAKE SPECIAL FOR ADVANCEMENT OF EXAMINATION IN THIS APPLICATION UNDER 37 CFR 1.102(c)(1) and MPEP 708.02 (IV) ON THE BASIS OF THE APPLICANT'S AGE.

A grantable petition requires one of the following items:
(1) Statement by one named inventor in the application that he/she is 65 years of age, or more; or
(2) Certification by a registered attorney/agent having evidence such as a birth certificate, passport, driver's license, etc. showing one named inventor in the application is 65 years of age, or more.

Name of Inventor who is 65 years of age, or older

Given Name	Middle Name	Family Name	Suffix
David	M.	Goldenberg	

A signature of the applicant or representative is required in accordance with 37 CFR 1.33 and 10.18.
Please see 37 CFR 1.4(d) for the format of the signature.

Select (1) or (2) :

○ (1) I am an inventor in this application and I am 65 years of age, or more.

● (2) I am an attorney or agent registered to practice before the Patent and Trademark Office, and I certify that I am in possession of evidence, and will retain such in the application file record, showing that the inventor listed above is 65 years of age, or more.

Signature	/Richard A. Nakashima/	Date (YYYY-MM-DD)	2011-08-25
Name	Richard A. Nakashima	Registration Number	42023

PTO/SB/130 (07-09)
Approved for use through 07/31/2012. OMB 0651- 0031
U.S. Patent and Trademark Office; U.S. DEPARTMENT OF COMMERCE
Under the Paperwork Reduction Act of 1995, no persons are required to respond to a collection of information unless it contains a valid OMB control number

Privacy Act Statement

The Privacy Act of 1974 (P.L. 93-579) requires that you be given certain information in connection with your submission of the attached form related to a patent application or patent. Accordingly, pursuant to the requirements of the Act, please be advised that: (1) the general authority for the collection of this information is 35 U.S.C. 2(b)(2); (2) furnishing of the information solicited is voluntary; and (3) the principal purpose for which the information is used by the U.S. Patent and Trademark Office is to process and/or examine your submission related to a patent application or patent. If you do not furnish the requested information, the U.S. Patent and Trademark Office may not be able to process and/or examine your submission, which may result in termination of proceedings or abandonment of the application or expiration of the patent.

The information provided by you in this form will be subject to the following routine uses:

1. The information on this form will be treated confidentially to the extent allowed under the Freedom of Information Act (5 U.S.C. 552) and the Privacy Act (5 U.S.C. 552a). Records from this system of records may be disclosed to the Department of Justice to determine whether the Fr eedom of Information Act requires disclosure of these records.

2. A record from this system of records may be disclosed, as a routine use, in the course of presenting evidence to a court, magistrate, or administrative tribunal, including disclosures to opposing counsel in the course of settlement negotiations.

3. A record in this system of records may be disclosed, as a routine use, to a Member of Congress submitting a request involving an individual, to whom the record pertains, when the individual has requested assistance from the Member with respect to the subject matter of the record.

4. A record in this system of records may be disclosed, as a routine use, to a contractor of the Agency having need for the information in order to perform a contract. Recipients of information shall be required to comply with the requirements of the Privacy Act of 1974, as amended, pursuant to 5 U.S.C. 552a(m).

5. A record related to an International Application filed under the Patent Cooperation Treaty in this system of records may be disclosed, as a routine use, to the International Bureau of the World Intellectual Property Organization, pursuant to the Patent Cooperation Treaty.

6. A record in this system of records may be disclosed, as a routine use, to another federal agency for purposes of National Security review (35 U.S.C. 181) and for review pursuant to the Atomic Energy Act (42 U.S.C. 218(c)).

7. A record from this system of records may be disclosed, as a routine use, to the Administrator, General Services, or his/her designee, during an inspection of records conducted by GSA as part of that agency's responsibility to recommend improvements in records management practices and programs, under authority of 44 U.S.C. 2904 and 2906. Such disclosure shall be made in accordance with the GSA regulations governing inspection of records for this purpose, and any other relevant (i.e., GSA or Commerce) directive. Such disclosure shall not be used to make determinations about indivi duals.

8. A record from this system of records may be disclosed, as a routine use, to the public after either publication of the application pursuant to 35 U.S.C. 122(b) or issuance of a patent pursuant to 35 U.S.C. 151. Further, a record may be disclosed, subject to the limitations of 37 CFR 1.14, as a routine use, to the public if the record was filed in an application which became abandoned or in which the proceedings were terminated and which application is referenced by either a published application, an application open to public inspections or an issued patent.

9. A record from this system of records may be disclosed, as a routine use, to a Federal, State, or local law enforcement agency, if the USPTO becomes aware of a violation or potential violation of law or regulation.

UNITED STATES PATENT AND TRADEMARK OFFICE

Commissioner for Patents
United States Patent and Trademark Office
P.O. Box 1450
Alexandria, VA 22313-1450
www.uspto.gov

In re Application of
William J. McBride

Application No. 13163145

Filed: June 17,2011

Attorney Docket No. IMM310US8

:DECISION ON PETITION TO MAKE SPECIAL
:UNDER 37 CFR 1.102(c)(1)

This is a decision on the electronic petition under 37 CFR 1.102 (c)(1), filed 25-AUG-2011 to make the above-identified application special based on applicant's age as set forth in MPEP § 708.02, Section IV.

The petition is **GRANTED**.

A grantable petition to make an application special under 37 CFR 1.102(c)(1), MPEP § 708.02, Section IV: Applicant's Age must include a statement by applicant or a registered practitioner having evidence that applicant is at least 65 years of age. No fee is required.

Accordingly, the above-identified application has been accorded "special" status and will be taken up for action by the examiner upon the completion of all pre-examination processing.

Telephone inquiries concerning this electronic decision should be directed to the Electronic Business Center at 866-217-9197.

All other inquiries concerning either the examination or status of the application should be directed to the Technology Center.

UNITED STATES PATENT AND TRADEMARK OFFICE

UNITED STATES DEPARTMENT OF COMMERCE
United States Patent and Trademark Office
Address: COMMISSIONER FOR PATENTS
P.O. Box 1450
Alexandria, Virginia 22313-1450
www.uspto.gov

APPLICATION NO.	FILING DATE	FIRST NAMED INVENTOR	ATTORNEY DOCKET NO.	CONFIRMATION NO.
13/163,146	06/17/2011	Guojun Xu	13674-523 (Client Ref. No	9054

EXAMINER
PHAM, CHI H

ART UNIT	PAPER NUMBER
2471	

MAIL DATE	DELIVERY MODE
04/02/2012	PAPER

7590 04/02/2012

Huawei/BHGL
P.O. Box 10395
Chicago, IL 60610

DECISION GRANTING PETITION UNDER 37 CFR 1.138(d)

The declaration of express abandonment is recognized

This is in response to the petition under 37 CFR 1.138(d), requesting for a refund of any previously paid search fee and excess claims fee in the above-identified application.

The petition is granted.

The express abandonment is recognized. Any previously paid search fee and excess claims fee are hereby refunded.

Telephone inquiries should be directed to the Office of Data Management at (571) 272-4200.

Patent Publication Branch
Office of Data Management

FORM PET651G (Rev. 08/07)

PTO/SB/20PCT-EP (05-10)
Approved for use through 01/31/2012. OMB 0651-0058
U.S. Patent and Trademark Office; U. S. DEPARTMENT OF COMMERCE
Under the Paperwork Reduction Act of 1995, no persons are required to respond to a collection of information unless it displays a valid OMB control number.

REQUEST FOR PARTICIPATION IN THE PATENT COOPERATION TREATY - PATENT PROSECUTION HIGHWAY (PCT-PPH) PILOT PROGRAM BETWEEN THE EUROPEAN PATENT OFFICE (EPO) AND THE USPTO

Application No:	13/163,194	Filing date:	June 17, 2011
First Named Inventor:	Bartu AHISKA et al.		
Title of the Invention:	Automatically Expanding the Zoom Capability of a Wide-Angle Video Camera		

THIS REQUEST FOR PARTICIPATION IN THE PCT-PPH PILOT PROGRAM ALONG WITH THE REQUIRED DOCUMENTS MUST BE SUBMITTED VIA EFS-WEB. INFORMATION REGARDING EFS-WEB IS AVAILABLE AT HTTP://WWW.USPTO.GOV/EBC/EFS_HELP.HTML

APPLICANT HEREBY REQUESTS PARTICIPATION IN THE PCT-PPH PROGRAM AND PETITIONS TO MAKE THE ABOVE-IDENTIFIED APPLICATION SPECIAL UNDER THE PCT-PPH PROGRAM.

The above-identified application is (1) a national stage entry of the corresponding PCT application, or (2) a national stage entry of another PCT application which claims priority to the corresponding PCT application, or (3) a national application that claims domestic/ foreign priority to the corresponding PCT application, or (4) a national application which forms the basis for the priority claim in the corresponding PCT application, or (5) a continuing application of a U.S. application that satisfies one of (1) to (4) above, or (6) a U.S. application that claims domestic benefit to a U.S. provisional application which forms the basis for the priority claim in the corresponding PCT application.

The corresponding PCT application number(s) is/are: PCT/IB2005/003504

The international filing date of the corresponding PCT application(s) is/are: 19/July/2005

I. List of Required Documents:

a. **A copy of the latest international work product (WO/ISA, WO/IPEA, or IPER) in the above–identified corresponding PCT application(s)**

- [x] Is attached
- [ ] Is not attached because the document is already in the U.S. application.

b. **A copy of all claims which were indicated as having novelty, inventive step and industrial applicability in the above-identified corresponding PCT application(s).**

- [x] Is attached.
- [ ] Is not attached because the document is already in the U.S. application.

c. **English translations of the documents in a. and b. above are attached (if the documents are not in the English language). A statement that the English translation is accurate is attached for the document in b. above.**

This collection of information is required by 35 U.S.C. 119, 37 CFR 1.55, and 37 CFR 1.102(d). The information is required to obtain or retain a benefit by the public, which is to file (and by the USPTO to process) an application. Confidentiality is governed by 35 U.S.C. 122 and 37 CFR 1.11 and 1.14. This collection is estimated to take 2 hours to complete, including gathering, preparing, and submitting the completed application form to the USPTO. Time will vary depending upon the individual case. Any comments on the amount of time you require to complete this form and/or suggestions for reducing this burden should be sent to the Chief Information Officer, U.S. Patent and Trademark Office, U.S. Department of Commerce, P.O. Box 1450, Alexandria, VA 22313-1450. DO NOT SEND FEES OR COMPLETED FORMS TO THIS ADDRESS.

Approved for use through 01/31/2012. OMB 0651-0058
U.S.Patent and Trademark Office; U.S. DEPARTMENT OF COMMERCE

Under the Paperwork Reduction Act of 1995, no persons are required to respond to a collection of information unless it displays a valid OMB control number.

REQUEST FOR PARTICIPATION IN THE PCT-PPH PILOT PROGRAM BETWEEN THE EPO AND THE USPTO

(continued)

Application No.:	13/163,194
First Named Inventor:	Bartu AHISKA et al.

d. **(1) An information disclosure statement listing the documents cited in the international work products (ISR, WO/ISA, WO/IPEA, IPER) of the corresponding PCT application.**

☐ Is attached

☒ Has already been filed in the above-identified U.S. application on June 17, 2011

(2) Copies of all documents (except) for U.S. patents or U.S. patent application publications)

☐ Are attached.

☒ Have already been filed in the above-identified U.S. application on June 17, 2011

II. Claims Correspondence Table:

Claims in US Application	Patentable Claims in the corresponding PCT Application	Explanation regarding the correspondence
1 - 47	N/A	U.S. Claims are cancelled
48 - 67	48 - 67	Claims are identical except for typographical changes made in U.S. Claim 48
68 - 90	N/A	U.S. Claims are cancelled

III. All the claims in the US application sufficiently correspond to the patentable claims in the corresponding PCT application.

Signature /Robert O. Groover III/	Date June 17, 2011
Name (Print/Typed) Robert Groover	Registration Number 30059

Privacy Act Statement

The **Privacy Act of 1974 (P.L. 93-579)** requires that you be given certain information in connection with your submission of the attached form related to a patent application or patent. Accordingly, pursuant to the requirements of the Act, please be advised that: (1) the general authority for the collection of this information is 35 U.S.C. 2(b)(2); (2) furnishing of the information solicited is voluntary; and (3) the principal purpose for which the information is used by the U.S. Patent and Trademark Office is to process and/or examine your submission related to a patent application or patent. If you do not furnish the requested information, the U.S. Patent and Trademark Office may not be able to process and/or examine your submission, which may result in termination of proceedings or abandonment of the application or expiration of the patent.

The information provided by you in this form will be subject to the following routine uses:

1. The information on this form will be treated confidentially to the extent allowed under the Freedom of Information Act (5 U.S.C. 552) and the Privacy Act (5 U.S.C 552a). Records from this system of records may be disclosed to the Department of Justice to determine whether disclosure of these records is required by the Freedom of Information Act.
2. A record from this system of records may be disclosed, as a routine use, in the course of presenting evidence to a court, magistrate, or administrative tribunal, including disclosures to opposing counsel in the course of settlement negotiations.
3. A record in this system of records may be disclosed, as a routine use, to a Member of Congress submitting a request involving an individual, to whom the record pertains, when the individual has requested assistance from the Member with respect to the subject matter of the record.
4. A record in this system of records may be disclosed, as a routine use, to a contractor of the Agency having need for the information in order to perform a contract. Recipients of information shall be required to comply with the requirements of the Privacy Act of 1974, as amended, pursuant to 5 U.S.C. 552a(m).
5. A record related to an International Application filed under the Patent Cooperation Treaty in this system of records may be disclosed, as a routine use, to the International Bureau of the World Intellectual Property Organization, pursuant to the Patent Cooperation Treaty.
6. A record in this system of records may be disclosed, as a routine use, to another federal agency for purposes of National Security review (35 U.S.C. 181) and for review pursuant to the Atomic Energy Act (42 U.S.C. 218(c)).
7. A record from this system of records may be disclosed, as a routine use, to the Administrator, General Services, or his/her designee, during an inspection of records conducted by GSA as part of that agency's responsibility to recommend improvements in records management practices and programs, under authority of 44 U.S.C. 2904 and 2906. Such disclosure shall be made in accordance with the GSA regulations governing inspection of records for this purpose, and any other relevant (*i.e.*, GSA or Commerce) directive. Such disclosure shall not be used to make determinations about individuals.
8. A record from this system of records may be disclosed, as a routine use, to the public after either publication of the application pursuant to 35 U.S.C. 122(b) or issuance of a patent pursuant to 35 U.S.C. 151. Further, a record may be disclosed, subject to the limitations of 37 CFR 1.14, as a routine use, to the public if the record was filed in an application which became abandoned or in which the proceedings were terminated and which application is referenced by either a published application, an application open to public inspection or an issued patent.
9. A record from this system of records may be disclosed, as a routine use, to a Federal, State, or local law enforcement agency, if the USPTO becomes aware of a violation or potential violation of law or regulation.

UNITED STATES PATENT AND TRADEMARK OFFICE

UNITED STATES DEPARTMENT OF COMMERCE
United States Patent and Trademark Office
Address: COMMISSIONER FOR PATENTS
P.O. Box 1450
Alexandria, Virginia 22313-1450
www.uspto.gov

APPLICATION NO.	FILING DATE	FIRST NAMED INVENTOR	ATTORNEY DOCKET NO.	CONFIRMATION NO.
13/163,194	06/17/2011	Bartu Ahiska	GRND-04A	9141

75076 7590 07/06/2011
Robert O. Groover
Box 293748
Lewisville, TX 75029

EXAMINER

ART UNIT	PAPER NUMBER
2873	

NOTIFICATION DATE	DELIVERY MODE
07/06/2011	ELECTRONIC

Please find below and/or attached an Office communication concerning this application or proceeding.

The time period for reply, if any, is set in the attached communication.

Notice of the Office communication was sent electronically on above-indicated "Notification Date" to the following e-mail address(es):

groover@techpatents.com
ggroover@technopatents.com

UNITED STATES PATENT AND TRADEMARK OFFICE

Commissioner for Patents
United States Patent and Trademark Office
P.O. Box 1450
Alexandria, VA 22313-1450
www.uspto.gov

Groover & Associates PLLC
Box 293748
Lewisville TX 75029

In re Application of	
AHISKA et al.	**: DECISION ON REQUEST TO**
Application No.: 13/163,194	**: PARTICIPATE IN THE PATENT**
Filed: 17 June 2011	**: PROSECUTION HIGHWAY**
Attorney Docket No.: GRND-04A	**: PROGRAM AND PETITION**
For: AUTOMATICALLY EXPANDING	**: TO MAKE SPECIAL UNDER**
THE ZOOM CAPABILITY OF A	**: 37 CFR 1.102(a)**
WIDE-ANGLE VIDEO CAMERA	

This is a decision on the request to participate in the PCT Patent Prosecution Highway (PCT-PPH) pilot program and the petition under 37 CFR 1.102(a), filed on 17 June, to make the above-identified application special.

The request and petition are **GRANTED**.

Discussion

A grantable request to participate in the PCT-PPH pilot program and petition to make special require:

(1) The U.S. application must have an eligible relationship to one or more PCT applications where the ISA or IPEA are the JPO, EPO, KIPO, NPI, or USPTO;

(2) At least one claim in the PCT application has novelty, inventive step, and industrial applicability and must be free of any observations in Box VIII in the latest work product in the international stage or applicant must identify and explain why the claim(s) is/are not subject to the observation in Box VIII;

(3) Applicant must submit a copy of the claim(s) from the PCT application(s) that have novelty, inventive step, and industrial applicability along with an English translation thereof and a statement that the English translation is accurate, if the claims are not in the English language;

(4) All the claims in the U.S. application must sufficiently correspond or be amended to sufficiently correspond to the claim(s) that have novelty, inventive step, and industrial applicability in the PCT application(s);

(5) Examination of the U.S. application has not begun;

(6) Applicant must submit a copy of the latest international work product from the PCT application indicating that the claim(s) have novelty, inventive step, and industrial applicability

along with an English translation thereof and a statement that the English translation is accurate if the latest international work product is not in the English language;

(7) Applicant must submit an IDS listing the documents cited by the PCT examiner in the international work product along with copies of documents except U.S. patents or U.S. patent application publications.

The request to participate in the PCT-PPH pilot program and petition comply with the above requirements. Accordingly, the above-identified application has been accorded "special" status.

Telephone inquiries concerning this decision should be directed to Lee W. Young at 571-272-4549.

All other inquiries concerning the examination or status of the application is accessible in the PAIR system at http://www.uspto.gov/ebc.index.html.

This application will be forwarded to the examiner for action on the merits commensurate with this decision once this application's formality reviews have been completed.

Lee W. Young
TQAS Technology Center 2800 - Semiconductors,
Electrical & Optical Systems & Components

UNITED STATES PATENT AND TRADEMARK OFFICE

UNITED STATES DEPARTMENT OF COMMERCE
United States Patent and Trademark Office
Address: COMMISSIONER FOR PATENTS
P.O. Box 1450
Alexandria, Virginia 22313-1450
www.uspto.gov

APPLICATION NO.	FILING DATE	FIRST NAMED INVENTOR	ATTORNEY DOCKET NO.	CONFIRMATION NO.
13/163,230	06/17/2011	Jeffrey Todd HENDERSON	HENDERSON-001-US	9211

EXAMINER
KOONTZ, TAMMY J

ART UNIT	PAPER NUMBER
3974	

MAIL DATE	DELIVERY MODE
04/12/2012	PAPER

7590 04/12/2012
MAIER & MAIER, PLLC
1000 DUKE STREET
ALEXANDRIA, VA 22314

DECISION GRANTING PETITION UNDER 37 CFR 1.138(d)

The declaration of express abandonment is recognized

This is in response to the petition under 37 CFR 1.138(d), requesting for a refund of any previously paid search fee and excess claims fee in the above-identified application.

The petition is granted.

The express abandonment is recognized. Any previously paid search fee and excess claims fee are hereby refunded.

Telephone inquiries should be directed to the Office of Data Management at (571) 272-4200.

Betty Powell

Patent Publication Branch
Office of Data Management

FORM PET651G (Rev. 08/07)

UNITED STATES PATENT AND TRADEMARK OFFICE

UNITED STATES DEPARTMENT OF COMMERCE
United States Patent and Trademark Office
Address: COMMISSIONER FOR PATENTS
P.O. Box 1450
Alexandria, Virginia 22313-1450
www.uspto.gov

APPLICATION NO.	FILING DATE	FIRST NAMED INVENTOR	ATTORNEY DOCKET NO.	CONFIRMATION NO.
13/163,279	06/17/2011	Piet DEWAELE	708304	9328

23460 7590 07/14/2011
LEYDIG VOIT & MAYER, LTD
TWO PRUDENTIAL PLAZA, SUITE 4900
180 NORTH STETSON AVENUE
CHICAGO, IL 60601-6731

EXAMINER

ART UNIT	PAPER NUMBER
2624	

NOTIFICATION DATE	DELIVERY MODE
07/14/2011	ELECTRONIC

Please find below and/or attached an Office communication concerning this application or proceeding.

The time period for reply, if any, is set in the attached communication.

Notice of the Office communication was sent electronically on above-indicated "Notification Date" to the following e-mail address(es):

Chgpatent@leydig.com

UNITED STATES PATENT AND TRADEMARK OFFICE

Commissioner for Patents
United States Patent and Trademark Office
P.O. Box 1450
Alexandria, VA 22313-1450
www.uspto.gov

LEYDIG VOIT & MAYER, LTD
TWO PRUDENTIAL PLAZA, SUITE 4900
180 NORTH STETSON AVENUE
CHICAGO IL 60601-6731

In Re Application of DEWAELE, PIET Application Serial No. 13/163,279 Filed: June 17, 2011 For: **METHOD OF PERFORMING MEASUREMENTS ON DIGITAL IMAGES**	: : : : :	DECISION ON PETITION TO ACCEPT PHOTOGRAPHS AS DRAWINGS UNDER 37 CFR 1.84(b)

This is a decision on the petition under 37 C.F.R. § 1.84(b), filed June 17, 2011, requesting acceptance of black and white photographs in the subject patent application in lieu of Figures 7 and 8 submitted with the application as originally filed.

Black and white photographs submitted in lieu of ink drawings must comply with 37 CFR 1.84(b). There is no requirement for a petition or petition fee, and only one set of photographs is required. See 1213 O.G. 108 (Aug. 4, 1998) and 1211 O.G. 34 (June 9, 1998) and 37 CFR 1.84(b)(1). See MPEP 608.02 (VII).

Accordingly, the petition is **Dismissed**.

/John Peng/
John Peng
Quality Assurance Specialist
(571)272-7272)272-7272
Technology Center 2600

Doc Code: PET.AUTO **Document Description: Petition automatically granted by EFS-Web**	PTO/SB/83 U.S. Patent and Trademark Office Department of Commerce

Electronic Petition Request	**REQUEST FOR WITHDRAWAL AS ATTORNEY OR AGENT AND CHANGE OF CORRESPONDENCE ADDRESS**
Application Number	13163296
Filing Date	17-Jun-2011
First Named Inventor	Jean-Claude Lapraz
Art Unit	2857
Examiner Name	
Attorney Docket Number	056277/401565
Title	APPARATUS, METHOD AND COMPUTER-READABLE STORAGE MEDIUM FOR EVALUATING A PHYSIOLOGICAL CONDITION OF A PATIENT

◉ Please withdraw me as attorney or agent for the above identified patent application and the practitioners of record associated with Customer Number: 00826

The reason(s) for this request are those described in 37 CFR:

10.40(b)(4)

Certifications

☒ I/We have given reasonable notice to the client, prior to the expiration of the response period, that the practitioner(s) intend to withdraw from employment

☒ I/We have delivered to the client or a duly authorized representative of the client all papers and property (including funds) to which the client is entitled

☒ I/We have notified the client of any responses that may be due and the time frame within which the client must respond

Change the correspondence address and direct all future correspondence to the first named inventor or assignee that has properly made itself of record pursuant to 37 CFR 3.71:

Name	JUMPLION INC.
Address	357 WEST CENTER SUITE 208
City	POCATELLO
State	ID
Postal Code	83204
Country	US

I am authorized to sign on behalf of myself and all withdrawing practitioners.	
Signature	/Guy R. Gosnell/
Name	GUY R. GOSNELL
Registration Number	34610

UNITED STATES PATENT AND TRADEMARK OFFICE

Commissioner for Patents
United States Patent and Trademark Office
P.O. Box 1450
Alexandria, VA 22313-1450
www.uspto.gov

Decision Date : October 7,2011

In re Application of :

Jean-Claude Lapraz

Application No : 13163296

Filed : 17-Jun-2011

Attorney Docket No : 056277/401565

DECISION ON REQUEST TO WITHDRAW AS ATTORNEY/AGENTOF RECORD

This is an electronic decision on the Request to Withdraw as attorney or agent of record under 37 CFR § 1.36(b), filed October 7,2011

The request is **APPROVED.**

The request was signed by GUY R. GOSNELL (registration no. 34610) on behalf of all attorneys/agents associated with Customer Number 00826 . All attorneys/agents associated with Cusotmer Number 00826 have been withdrawn.

Since there are no remaining attorneys of record, all future communications from the Office will be directed to the first named inventor or assignee that has properly made itself of record pursuant to 37 CFR 3.71, with correspondence address:

Name	JUMPLION INC.
Name2	
Address 1	357 WEST CENTER
Address 2	SUITE 208
City	POCATELLO
State	ID
Postal Code	83204
Country	US

As a reminder, requester is required to inform the first named inventor or assignee that has properly made itself of record pursuant to 37 CFR 3.71 of the electronically processed petition.

Telephone inquiries concerning this decision should be directed to the Patent Electronic Business Center (EBC) at 866-217-9197.

Office of Petitions

UNITED STATES PATENT AND TRADEMARK OFFICE

Commissioner for Patents
United States Patent and Trademark Office
P.O. Box 1450
Alexandria, VA 22313-1450
www.uspto.gov

PANITCH SCHWARZE BELISARIO & NADEL LLP
ONE COMMERCE SQUARE
2005 MARKET STREET, SUITE 2200
PHILADELPHIA PA 19103

MAILED
OCT 04 2011
OFFICE OF PETITIONS

In re Application of	:	
HEPPNER, et al	:	
Application No. 13/163,344	:	DECISION ON PETITION
Filed: June 17, 2011	:	TO MAKE SPECIAL UNDER
Attorney Docket No. 688116-4U1	:	37 CFR 1.102(c)(1)
	:	

This is a decision on the petition under 37 CFR 1.102(c)(1), filed September 19, 2011, to make the above-identified application special based on applicant's age as set forth in M.P.E.P. § 708.02, Section IV.

The petition is **GRANTED**.

A grantable petition to make an application special under 37 CFR 1.102(c)(1) and MPEP § 708.02, Section IV: Applicant's Age must be accompanied by evidence showing that at least one of the applicants is 65 years of age, or more, such as a birth certificate or a statement by applicant. No fee is required

The instant petition includes a statement made by registered attorney Bijal Shah-Creamer, which will be treated as the result of the attorney having evidence that at least one of the applicants is 65 years of age or more. In the event that such evidence is not with the attorney, the Office should be notified immediately. Accordingly, the above-identified application has been accorded "special" status.

Telephone inquiries concerning this decision should be directed to the undersigned at (571) 272-6735.

All other telephone inquiries should be directed to the Office of Data Management at (571) 272-4000.

This application is being referred to the Office of Data Management for further processing. This application will be accorded "special" status when pre-examination processing is done.

/Diane Goodwyn/
Diane Goodwyn
Petitions Examiner
Office of Petitions

Doc Code: PET.GREEN
Document Description: Petition for Green Tech Pilot

PTO/SB/420 (11-10)
Approved for use through 01/31/2011. OMB 0651-0062
U.S. Patent and Trademark Office; U. S. DEPARTMENT OF COMMERCE
Under the Paperwork Reduction Act of 1995, no persons are required to respond to a collection of information unless it displays a valid OMB control number.

PETITION TO MAKE SPECIAL UNDER THE GREEN TECHNOLOGY PILOT PROGRAM

Attorney Docket Number: TP-BOID-HPG2	Application Number (if known):	Filing date: 06/17/2011
First Named Inventor: David Mitchell Boie		
Title: Hall Effect Power Generator		

APPLICANT HEREBY REQUESTS TO PARTICIPATE IN THE GREEN TECHNOLOGY PILOT PROGRAM FOR THE ABOVE-IDENTIFIED APPLICATION. See Instruction Sheet on page 2.

This petition must be timely filed electronically using the USPTO electronic filing system, EFS-Web.

1. By filing this petition:

   Applicant is requesting early publication: Applicant hereby requests early publication under 37 CFR 1.219 and the publication fee set forth in 37 CFR 1.18(d) accompanies this request.

2. By filing this petition: applicant is agreeing to make an election without traverse in a telephonic interview and elect an invention that meets the eligibility requirements for the Green Technology Pilot Program, if the Office determines that the claims are not obviously directed to a single invention. See Instruction Sheet.

3. This request is accompanied by statements of special status for the eligibility requirement.

4. The application contains no more than three (3) independent claims and twenty (20) total claims.

5. The application does not contain any multiple dependent claims.

6. Other attachments: Statement of special status for the eligibility requirement

Signature /Ming Chow/	Date 06/17/2011
Name (Print/Typed) Ming Chow	Registration Number 58531

Note: *Signatures of all the inventors or assignees of record of the entire interest or their representative(s) are required in accordance with 37 CFR 1.33 and 11.18. Please see 37 CFR 1.4(d) for the form of the signature. If necessary, submit multiple forms for more than one signature see below*.*

☒ *Total of 1 forms are submitted.

The information is required to obtain or retain a benefit by the public which is to file (and by the USPTO to process) an application. Confidentiality is governed by 35 U.S.C. 122 and 37 CFR 1.11 and 1.14. This collection is estimated to take 12 hours to complete, including gathering, preparing, and submitting the completed application form to the USPTO. Time will vary depending upon the individual case. Any comments on the amount of time you require to complete this form and/or suggestions for reducing this burden, should be sent to the Chief Information Officer, U.S. Patent and Trademark Office, U.S. Department of Commerce, P.O. Box 1450, Alexandria, VA 22313-1450. DO NOT SEND FEES OR COMPLETED FORMS TO THIS ADDRESS. **SEND TO: Commissioner for Patents, P.O. Box 1450, Alexandria, VA 22313-1450.**

If you need assistance in completing the form, call 1-800-PTO-9199 and select option 2.

Under the Paperwork Reduction Act of 1995, no persons are required to respond to a collection of information unless it displays a valid OMB control number.

Instruction Sheet for Petition to Make Special Under the Green Technology Pilot Program

(Not to be Submitted to the USPTO)

The following is a summary of the requirements (for more information see the notices (i) "Pilot Program for Green Technologies Including Greenhouse Gas Reduction," (ii) "Elimination of Classification Requirement in the Green Technology Pilot Program," and (iii) "Expansion and Extension of the Green Technology Pilot Program," available on the USPTO web site at http://www.uspto.gov/patents/init_events/green_tech.jsp):

1) The application must be a non-reissue, non-provisional utility application filed under 35 U.S.C. 111 (a), or an international application that has entered the national stage in compliance with 35 U.S.C. 371, irrespective of the filing date of the application. Reexamination proceedings are excluded from this pilot program.

2) The application must contain three or fewer independent claims and twenty or fewer total claims. The application must not contain any multiple dependent claims. For an application that contains more than three independent claims or twenty total claims, or multiple dependent claims, applicant must file a preliminary amendment in compliance with 37 CFR 1.121 to cancel the excess claims and/or the multiple dependent claims at the time the petition to make special is filed.

3) The claims must be directed to a single invention that materially enhances the quality of the environment, or that materially contributes to: (1) the discovery or development of renewable energy resources; (2) the more efficient utilization and conservation of energy resources; or (3) green house gas emission reduction (see the eligibility requirements of sections II and III of the notice (i) cited above). The petition must include a statement that, if the USPTO determines that the claims are directed to multiple inventions (e.g., in a restriction requirement), applicant will agree to make an election without traverse in a telephonic interview, and elect an invention that meets the eligibility requirements in section II or III of the notice (i) cited above.

4) The petition to make special must be timely filed electronically using the USPTO electronic filing system, EFS-Web, and selecting the document description of "Petition for Green Tech Pilot" on the EFS-Web screen. Applicant should use form PTO/SB/420, which is available as a Portable Document Format (PDF) fillable form in EFS-Web and on the USPTO Web site.

5) The petition to make special must be filed at least one day prior to the date that a first Office action (which may be an Office action containing only a restriction requirement) appears in the Patent Application Information Retrieval (PAIR) system. Applicant may check the status of the application using PAIR.

6) The petition to make special must be accompanied by a request for early publication in compliance with 37 CFR 1.219 and the publication fee set forth in 37 CFR 1.18(d).

Privacy Act Statement

The **Privacy Act of 1974 (P.L. 93-579)** requires that you be given certain information in connection with your submission of the attached form related to a patent application or patent. Accordingly, pursuant to the requirements of the Act, please be advised that: (1) the general authority for the collection of this information is 35 U.S.C. 2(b)(2); (2) furnishing of the information solicited is voluntary; and (3) the principal purpose for which the information is used by the U.S. Patent and Trademark Office is to process and/or examine your submission related to a patent application or patent. If you do not furnish the requested information, the U.S. Patent and Trademark Office may not be able to process and/or examine your submission, which may result in termination of proceedings or abandonment of the application or expiration of the patent.

The information provided by you in this form will be subject to the following routine uses:

1. The information on this form will be treated confidentially to the extent allowed under the Freedom of Information Act (5 U.S.C. 552) and the Privacy Act (5 U.S.C 552a). Records from this system of records may be disclosed to the Department of Justice to determine whether disclosure of these records is required by the Freedom of Information Act.
2. A record from this system of records may be disclosed, as a routine use, in the course of presenting evidence to a court, magistrate, or administrative tribunal, including disclosures to opposing counsel in the course of settlement negotiations.
3. A record in this system of records may be disclosed, as a routine use, to a Member of Congress submitting a request involving an individual, to whom the record pertains, when the individual has requested assistance from the Member with respect to the subject matter of the record.
4. A record in this system of records may be disclosed, as a routine use, to a contractor of the Agency having need for the information in order to perform a contract. Recipients of information shall be required to comply with the requirements of the Privacy Act of 1974, as amended, pursuant to 5 U.S.C. 552a(m).
5. A record related to an International Application filed under the Patent Cooperation Treaty in this system of records may be disclosed, as a routine use, to the International Bureau of the World Intellectual Property Organization, pursuant to the Patent Cooperation Treaty.
6. A record in this system of records may be disclosed, as a routine use, to another federal agency for purposes of National Security review (35 U.S.C. 181) and for review pursuant to the Atomic Energy Act (42 U.S.C. 218(c)).
7. A record from this system of records may be disclosed, as a routine use, to the Administrator, General Services, or his/her designee, during an inspection of records conducted by GSA as part of that agency's responsibility to recommend improvements in records management practices and programs, under authority of 44 U.S.C. 2904 and 2906. Such disclosure shall be made in accordance with the GSA regulations governing inspection of records for this purpose, and any other relevant (*i.e.*, GSA or Commerce) directive. Such disclosure shall not be used to make determinations about individuals.
8. A record from this system of records may be disclosed, as a routine use, to the public after either publication of the application pursuant to 35 U.S.C. 122(b) or issuance of a patent pursuant to 35 U.S.C. 151. Further, a record may be disclosed, subject to the limitations of 37 CFR 1.14, as a routine use, to the public if the record was filed in an application which became abandoned or in which the proceedings were terminated and which application is referenced by either a published application, an application open to public inspection or an issued patent.
9. A record from this system of records may be disclosed, as a routine use, to a Federal, State, or local law enforcement agency, if the USPTO becomes aware of a violation or potential violation of law or regulation.

IN THE UNITED STATES PATENT AND TRADEMARK OFFICE

In re application of the first inventor: David Mitchell Boie	*	Group Art Unit:
	*	Examiner:
Serial No: (TBD)	*	Attorney Docket No: TP-BOID-HPG2
Filed: 06-17-2011	*	
Title: Hall Effect Power Generator	*	

United States Patent and Trademark Office
Commissioner for Patents
P.O. Box 1450
Alexandria, VA 22313-1450

PETITION TO MAKE SPECIAL UNDER GREEN TECHNOLOGY PROGRAM

Applicant petitions to make special under the Green Technology Pilot Program. The basis for the special status is on the grounds that the present invention introduces a means of alternative energy production by capitalizing on magnetostatic power which flows from a permanent magnet and converting this power into conventional DC electricity.

Applicant also agrees that if the USPTO determines that the claims are directed to multiple inventions, applicant will agree to make an election without traverse in a telephonic interview, and elect an invention that meets the eligibility requirements in section II or III of the notice.

Respectfully submitted,
Sinorica, LLC

Date: 06-17-2011

/Ming Chow/
Ming Chow, Reg. No.: 58531

Sinorica, LLC
19785 Crystal Rock Drive, Suite 207
Germantown, MD 20874
Phone 301-551-5128
Fax 206-203-2603

UNITED STATES PATENT AND TRADEMARK OFFICE

UNITED STATES DEPARTMENT OF COMMERCE
United States Patent and Trademark Office
Address: COMMISSIONER FOR PATENTS
P.O. Box 1450
Alexandria, Virginia 22313-1450
www.uspto.gov

APPLICATION NO.	FILING DATE	FIRST NAMED INVENTOR	ATTORNEY DOCKET NO.	CONFIRMATION NO.
13/163,394	06/17/2011	David Mitchell Boie	TP-BOID-HPG2	9573

62439 7590 07/07/2011
SINORICA, LLC
19785 Crystal Rock Drive
Suite 207
Germantown, MD 20874

EXAMINER

ART UNIT	PAPER NUMBER
2858	

NOTIFICATION DATE	DELIVERY MODE
07/07/2011	ELECTRONIC

Please find below and/or attached an Office communication concerning this application or proceeding.

The time period for reply, if any, is set in the attached communication.

Notice of the Office communication was sent electronically on above-indicated "Notification Date" to the following e-mail address(es):

MCHOW@SINORICA.COM
DOMINS@COMCAST.NET
SINORICA@GMAIL.COM

UNITED STATES PATENT AND TRADEMARK OFFICE

Commissioner for Patents
United States Patent and Trademark Office
P.O. Box 1450
Alexandria, VA 22313-1450
www.uspto.gov

SINORICA, LLC
19785 Crystal Rock Drive
Suite 207
Germantown MD 20874

In re Application of	:	
David BOIE	:	DECISION ON PETITION
Application No. 13/163,394	:	TO MAKE SPECIAL UNDER
Filed: June 17, 2011	:	THE GREEN TECHNOLOGY
Attorney Docket No. TP-BOID-HPG2	:	PILOT PROGRAM

This is a decision on the petition under 37 CFR 1.102, filed on June 17, 2011, to make the above-identified application special under the pilot program for applications pertaining to Green Technologies as set forth 74 Federal Register Notice 64666 (December 8, 2009) and amended by 75 Federal Register Notice 28554 (May 21, 2010) and 75 Federal Register Notice 69049 (November 10, 2010).

The petition is **DISMISSED**.

If reconsideration of this decision is desired, a petition for reconsideration must be filed within ONE (1) MONTH OR THIRTY (30) DAYS from the mail date of this decision, whichever is longer. No extension of this time limit can be granted under 37 CFR 1.136(a) or (b). The petition for reconsideration should include an exhaustive attempt to provide the lacking item(s) noted below, since, after a decision on the petition for reconsideration, no further reconsideration or review of the matter will be undertaken by the Director.

A grantable petition to make an application special under 37 CFR 1.102 and the pilot program as set forth in 74 FR 64666 must be directed to a nonprovisional application filed under 35 USC 111(a) or be a national stage entry under 35 USC 371, exclusive of any reissue applications and be filed prior to the date of the notice, December 8, 2009.

In order to qualify for special status, the following requirements must be met. 1) The application must have no more than 3 independent claims and no more than 20 total claims. 2) The application must not contain any multiple dependent claims. 3) The petition must state the basis for seeking special status, i.e., the claimed invention either: A) materially enhances the quality of the environment or B) materially contributes to: i) the discovery or development of renewable energy resources, ii) the more efficient utilization and conservation of energy resources, or iii) greenhouse gas emission reduction. 4) If the disclosure is not clear on its face that the claimed invention materially contributes under category (A) or (B), the petition must be accompanied by a statement by the applicant, assignee, or an attorney/agent registered to practice before the

Office explaining how the materiality standard is met. 5) A statement that applicant will agree to make an election without traverse in a telephonic interview if a restriction requirement is made by the examiner. 6) The petition to make special must be filed electronically. 7) The petition must be filed at least one day prior to the date that a first Office Action appears in the Patent Application Information Retrieval (PAIR) system. 8) The petition must be accompanied by a request for early publication in compliance with 37 CFR 1.219 and include the publication fee as set forth in 37 CFR 1.18(d).

The requirement for a fee for consideration of the petition to make special for applications pertaining to Green Technologies has been waived.

The petition lacks items 3 and 4.

In regard to item 3, applicant has stated to the basis for seeking special status as alternative energy production. However, this is not a basis for this pilot. The basis for this pilot are that the claimed invention either: A) materially enhances the quality of the environment or B) materially contributes to: i) the discovery or development of renewable energy resources, ii) the more efficient utilization and conservation of energy resources, or iii) greenhouse gas emission reduction. The term "renewable energy resources" for purposes of the pilot includes hydroelectric, solar, wind, renewable biomass, landfill gas, ocean (including tidal, wave, current, and thermal), geothermal, and municipal solid waste.

In regard to item 4, it is not readily apparent how the claimed power generator would meet any of the materiality standards.

Any reconsideration of this decision should be submitted through the USPTO electronic filing system, EFS-Web, and selecting the document description of "Petition for Green Tech Pilot" on the EFS-Web screen.

Telephone inquiries concerning this decision should be directed to Lee W. Young at 571-272-4549.

The application is being forwarded to the Technology Center Art Unit 2858 for action in its regular turn.

Lee W. Young
Quality Assurance Specialist
Technology Center 2800

PTO/SB/20PCT-KR (06-10)
Approved for use through 01/31/2015. OMB 0651-0058
U.S. Patent and Trademark Office; U.S DEPARTMENT OF COMMERCE
Under the Paperwork Reduction Act of 1995, no persons are required to respond to a collection of information unless it displays a valid OMB control number.

REQUEST FOR PARTICIPATION IN THE PATENT COOPERATION TREATY – PATENT PROSECUTION HIGHWAY (PCT-PPH) PILOT PROGRAM BETWEEN THE KOREAN INTELLECTUAL PROPERTY OFFICE (KIPO) AND THE USPTO

Application No.:	13163401	First Named Inventor:	Michael Wallace
Filing Date:	17-JUN-2011	Attorney Docket No.:	PURI.015
Title of the Invention:	MUSICAL INSTRUMENT WITH ONE SIDED THIN FILM CAPACITIVE TOUCH SENSORS		

THIS REQUEST FOR PARTICIPATION IN THE PCT-PPH PILOT PROGRAM ALONG WITH THE REQUIRED DOCUMENTS MUST BE SUBMITTED VIA EFS-WEB. INFORMATION REGARDING EFS-WEB IS AVAILABLE AT HTTP://WWW.USPTO.GOV/EBC/EFS_HELP.HTML.

APPLICANT HEREBY REQUESTS PARTICIPATION IN THE PCT-PPH PILOT PROGRAM AND PETITIONS TO MAKE THE ABOVE-IDENTIFIED APPLICATION SPECIAL UNDER THE PCT-PPH PILOT PROGRAM.

The above-identified application is (1) a national stage entry of the corresponding PCT application, or (2) a national stage entry of another PCT application which claims priority to the corresponding PCT application, or (3) a national application that claims domestic/ foreign priority to the corresponding PCT application, or (4) a national application which forms the basis for the priority claim in the corresponding PCT application, or (5) a continuing application of a U.S. application that satisfies one of (1) to (4) above, or (6) a U.S. application that claims domestic benefit to a U.S. provisional application which forms the basis for the priority claim in the corresponding PCT application.

The corresponding PCT application number(s) is/are: PCT/US2011/040913

The international filing date of the corresponding PCT application(s) is/are: 17 JUNE 2011 (17.06.2011)

I. List of Required Documents:

a. **A copy of the latest international work product (WO/ISA, WO/IPEA, or IPER) in the above-identified corresponding PCT application(s)**

- [x] is attached.
- [ ] is not attached because the document is already in the U.S. application.

b. **A copy of all claims which were indicated as having novelty, inventive step and industrial applicability in the above-identified corresponding PCT application(s)**

- [ ] is attached.
- [x] is not attached because the document is already in the U.S. application.

c. **English translations of the documents in a. and b. above are attached (if the documents are not in the English language). A statement that the English translation is accurate is attached for the document in b. above.**

d. **(1) An information disclosure statement listing the documents cited in the international work products (ISR, WO/ISA, WO/IPEA, IPER) of the corresponding PCT application.**

- [x] is attached.
- [ ] has already been filed in the above-identified U.S. application on _____

(2) Copies of all documents (except for U.S. patents or U.S. patent application publications)

- [x] are attached.
- [ ] have already been filed in the above-identified U.S. application on _____

This collection of information is required by 35 U.S.C. 119, 37 CFR 1.55, and 37 CFR 1.102(d). The information is required to obtain or retain a benefit by the public, which is to file (and by the USPTO to process) an application. Confidentiality is governed by 35 U.S.C. 122 and 37 CFR 1.11 and 1.14. This collection is estimated to take 2 hours to complete, including gathering, preparing, and submitting the completed application form to the USPTO. Time will vary depending upon the individual case. Any comments on the amount of time you require to complete this form and/or suggestions for reducing this burden should be sent to the Chief Information Officer, U.S. Patent and Trademark Office, U.S. Department of Commerce, P.O. Box 1450, Alexandria, VA 22313-1450. DO NOT SEND FEES OR COMPLETED FORMS TO THIS ADDRESS.

Under the Paperwork Reduction Act of 1995, no persons are required to respond to a collection of information unless it displays a valid OMB control number.

REQUEST FOR PARTICIPATION IN THE PCT-PPH PILOT PROGRAM BETWEEN THE KIPO AND THE USPTO

(continued)

Application No.:	13163401	First Named Inventor:	Michael Wallace

II. Claims Correspondence Table:

Claims in US Application	Patentable Claims in the corresponding PCT application	Explanation regarding the correspondence
1-12,14, 24-26	1-12,14, 24-26	Claims in PCT application exactly the same as claims in the US application.

III. All the claims in the US application sufficiently correspond to the patentable claims in the corresponding PCT application.

Signature /Philip R.M.Hunt/	Date 2012-03-15
Name (Print/Typed) Philip R.M. Hunt	Registration Number 58044

Privacy Act Statement

The **Privacy Act of 1974 (P.L. 93-579)** requires that you be given certain information in connection with your submission of the attached form related to a patent application or patent. Accordingly, pursuant to the requirements of the Act, please be advised that: (1) the general authority for the collection of this information is 35 U.S.C. 2(b)(2); (2) furnishing of the information solicited is voluntary; and (3) the principal purpose for which the information is used by the U.S. Patent and Trademark Office is to process and/or examine your submission related to a patent application or patent. If you do not furnish the requested information, the U.S. Patent and Trademark Office may not be able to process and/or examine your submission, which may result in termination of proceedings or abandonment of the application or expiration of the patent.

The information provided by you in this form will be subject to the following routine uses:

1. The information on this form will be treated confidentially to the extent allowed under the Freedom of Information Act (5 U.S.C. 552) and the Privacy Act (5 U.S.C 552a). Records from this system of records may be disclosed to the Department of Justice to determine whether disclosure of these records is required by the Freedom of Information Act.
2. A record from this system of records may be disclosed, as a routine use, in the course of presenting evidence to a court, magistrate, or administrative tribunal, including disclosures to opposing counsel in the course of settlement negotiations.
3. A record in this system of records may be disclosed, as a routine use, to a Member of Congress submitting a request involving an individual, to whom the record pertains, when the individual has requested assistance from the Member with respect to the subject matter of the record.
4. A record in this system of records may be disclosed, as a routine use, to a contractor of the Agency having need for the information in order to perform a contract. Recipients of information shall be required to comply with the requirements of the Privacy Act of 1974, as amended, pursuant to 5 U.S.C. 552a(m).
5. A record related to an International Application filed under the Patent Cooperation Treaty in this system of records may be disclosed, as a routine use, to the International Bureau of the World Intellectual Property Organization, pursuant to the Patent Cooperation Treaty.
6. A record in this system of records may be disclosed, as a routine use, to another federal agency for purposes of National Security review (35 U.S.C. 181) and for review pursuant to the Atomic Energy Act (42 U.S.C. 218(c)).
7. A record from this system of records may be disclosed, as a routine use, to the Administrator, General Services, or his/her designee, during an inspection of records conducted by GSA as part of that agency's responsibility to recommend improvements in records management practices and programs, under authority of 44 U.S.C. 2904 and 2906. Such disclosure shall be made in accordance with the GSA regulations governing inspection of records for this purpose, and any other relevant (*i.e.*, GSA or Commerce) directive. Such disclosure shall not be used to make determinations about individuals.
8. A record from this system of records may be disclosed, as a routine use, to the public after either publication of the application pursuant to 35 U.S.C. 122(b) or issuance of a patent pursuant to 35 U.S.C. 151. Further, a record may be disclosed, subject to the limitations of 37 CFR 1.14, as a routine use, to the public if the record was filed in an application which became abandoned or in which the proceedings were terminated and which application is referenced by either a published application, an application open to public inspection or an issued patent.
9. A record from this system of records may be disclosed, as a routine use, to a Federal, State, or local law enforcement agency, if the USPTO becomes aware of a violation or potential violation of law or regulation.

UNITED STATES PATENT AND TRADEMARK OFFICE

Commissioner for Patents
United States Patent and Trademark Office
P.O. Box 1450
Alexandria, VA 22313-1450
www.uspto.gov

BUCHANAN, INGERSOLL & ROONEY PC
POST OFFICE BOX 1404
ALEXANDRIA VA 22313-1404

MAILED
SEP 14 2011
OFFICE OF PETITIONS

In re Application of	:	
PAPASTERGIOU, Konstantinos	:	
Application No. 13/163,405	:	DECISION ON PETITION
Filed: June 17, 2011	:	UNDER 37 CFR 1.55(c)
Attorney Docket No.: 1034193-000234	:	

This is a decision on the petition under 37 CFR 1.55(c), filed June 17, 2011, to accept an unintentionally delayed claim under 35 U.S.C. § 119(a)-(d) for benefit of priority to the filing date of foreign European Patent Application No. 08172417.1, filed December 19, 2008.

The petition is **DISMISSED AS MOOT**.

The petition is unnecessary for the Application Data Sheet properly identifying the foreign application was timely submitted within the time period set out in 37 CFR § 1.55(c) and therefore a petition is not required.

Accordingly, the petition under 37 CFR 1.55(c) is not required. A corrected filing receipt was mailed July 14, 2011 showing the correct application number in the priority claim.

In view of the above, the surcharge fee submitted with the petition will be refunded to petitioner's credit card in due course.

Any questions concerning this decision on petition may be directed to Jose' Dees at (571) 272-1569. All other inquiries concerning either the examination procedures or status of the application should be directed to the Technology Center.

Boris Milef
PCT Legal Examiner
Office of PCT Legal Administration

PATENT
Docket No.: 91756-809217 (011710US)

IN THE UNITED STATES PATENT AND TRADEMARK OFFICE

In re application of:

Rajat Sharma et al.

Application No.: 13/163,482

Filed: June 17, 2011

For: GALLIUM AND NITROGEN CONTAINING TRIANGULAR OR DIAMOND-SHAPED CONFIGURATION FOR OPTICAL DEVICES

Customer No.: 20350

Confirmation No.: 9780

Examiner: Unassigned

Art Unit: 2811

PETITION TO MAKE SPECIAL UNDER THE GREEN TECHNOLOGY PILOT PROGRAM

Commissioner for Patents
P.O. Box 1450
Alexandria, VA 22313-1450

Commissioner:

Applicant hereby requests to participate in the Green Technology Pilot Program for the above-identified application. Applicant is herewith submitting a request for early publication together with the requisite fee of $300.00.

STATEMENTS OF SPECIAL STATUS FOR THE ELIGIBILITY REQUIREMENT

The application is a non-reissue, non-provisional utility application filed under 35 USC §111(a). The application contains no more than three independent claims, twenty or fewer total claims, and no multiple dependent claims.

By filing this petition:

Applicant believes the pending claims in this application are directed to a single invention that materially contributes to the discovery or development of renewable energy resources. The claimed invention relates to gallium-nitride substrates particularly suited for use

in the manufacture of light-emitting diodes. The resulting light-emitting diodes are used to provide low power electric lights, e.g., for the replacement of inefficient incandescent light bulbs.

Applicant hereby agrees to make an election without traverse in a telephonic interview and elect an invention that meets the eligibility requirements set forth in the notice titled "Pilot Program for Green Technologies Including Greenhouse Gas Reduction," as modified by the notice titled "Elimination of Classification Requirement in the Green Technology Pilot Program," each which was published in the Federal Register, if the Office determines that the claims are not obviously directed to a single invention.

If the Office believes a telephone conference would expedite prosecution of this application, please telephone the undersigned at 650-324-6303 (direct).

Respectfully submitted,

/Robert C. Colwell/

Robert C. Colwell
Reg. No. 27,431

KILPATRICK TOWNSEND & STOCKTON LLP
Two Embarcadero Center, Eighth Floor
San Francisco, California 94111-3834
Tel: (415) 576-0200
Fax: (415) 576-0300
RCC:mks

63898207 v1

PETITION TO MAKE SPECIAL UNDER THE GREEN TECHNOLOGY PILOT PROGRAM

Attorney Docket Number: 91756-809217	Application Number (if known): 13/163,482	Filing date: June 17, 2011
First Named Inventor: Sharma, Rajat		
Title: GALLIUM AND NITROGEN CONTAINING TRIANGULAR OR DIAMOND-SHAPED CONFIGURATION FOR OPTICAL DEVICES		

APPLICANT HEREBY REQUESTS TO PARTICIPATE IN THE GREEN TECHNOLOGY PILOT PROGRAM FOR THE ABOVE-IDENTIFIED APPLICATION. See Instruction Sheet on page 2.

This petition must be timely filed electronically using the USPTO electronic filing system, EFS-Web.

1. By filing this petition:

   Applicant is requesting early publication: Applicant hereby requests early publication under 37 CFR 1.219 and the publication fee set forth in 37 CFR 1.18(d) accompanies this request.

2. By filing this petition: applicant is agreeing to make an election without traverse in a telephonic interview and elect an invention that meets the eligibility requirements for the Green Technology Pilot Program, if the Office determines that the claims are not obviously directed to a single invention. See Instruction Sheet.

3. This request is accompanied by statements of special status for the eligibility requirement.

4. The application contains no more than three (3) independent claims and twenty (20) total claims.

5. The application does not contain any multiple dependent claims.

6. Other attachments:_____

Signature /Robert C. Colwell/	Date December 27, 2011
Name (Print/Typed) Robert C. Colwell	Registration Number 27,431

Note: *Signatures of all the inventors or assignees of record of the entire interest or their representative(s) are required in accordance with 37 CFR 1.33 and 11.18. Please see 37 CFR 1.4(d) for the form of the signature. If necessary, submit multiple forms for more than one signature, see below*.*

☐ *Total of_____forms are submitted.

Instruction Sheet for
Petition to Make Special Under the Green Technology Pilot Program

(Not to be Submitted to the USPTO)

The following is a summary of the requirements (for more information see notices (i) "Pilot Program for Green Technologies Including Greenhouse Gas Reduction," (ii) "Elimination of Classification Requirement in the Green Technology Pilot Program," and (iii) Expansion and Extension of the Green Technology Pilot Program," available on the USPTO web site at http:// www.uspto.gov/patents/init_events/green_tech.jsp):

1) The application must be a non-reissue, non-provisional utility application filed under 35 U.S.C. 111 (a), or an international application that has entered the national stage in compliance with 35 U.S.C. 371, irrespective of the filing date of the application. Reexamination proceedings are excluded from this pilot program.

2) The application must contain three or fewer independent claims and twenty or fewer total claims. The application must not contain any multiple dependent claims. For an application that contains more than three independent claims or twenty total claims, or multiple dependent claims, applicant must file a preliminary amendment in compliance with 37 CFR 1.121 to cancel the excess claims and/or the multiple dependent claims at the time the petition to make special is filed.

3) The claims must be directed to a single invention that materially enhances the quality of the environment, or that materially contributes to: (1) the discovery or development of renewable energy resources; (2) the more efficient utilization and conservation of energy resources; or (3) green house gas emission reduction (see the eligibility requirements of sections II and III of the notice (i) cited above). The petition must include a statement that, if the USPTO determines that the claims are directed to multiple inventions (e.g., in a restriction requirement), applicant will agree to make an election without traverse in a telephonic interview, and elect an invention that meets the eligibility requirements in section II or III of the notice (i) cited above.

4) The petition to make special must be timely filed electronically using the USPTO electronic filing system, EFS-Web, and selecting the document description of "Petition for Green Tech Pilot" on the EFS-Web screen. Applicant should use form PTO/SB/420, which is available as a Portable Document Format (PDF) fillable form in EFS-Web and on the USPTO Web site.

5) The petition to make special must be filed at least one day prior to the date that a first Office action (which may be an Office action containing only a restriction requirement) appears in the Patent Application Information Retrieval (PAIR) system. Applicant may check the status of the application using PAIR.

6) The petition to make special must be accompanied by a request for early publication in compliance with 37 CFR 1.219 and the publication fee set forth in 37 CFR 1.18(d).

UNITED STATES PATENT AND TRADEMARK OFFICE

UNITED STATES DEPARTMENT OF COMMERCE
United States Patent and Trademark Office
Address: COMMISSIONER FOR PATENTS
P.O. Box 1450
Alexandria, Virginia 22313-1450
www.uspto.gov

APPLICATION NO.	FILING DATE	FIRST NAMED INVENTOR	ATTORNEY DOCKET NO.	CONFIRMATION NO.
13/163,482	06/17/2011	Rajat Sharma	91756-809217 (011710US)	9780

101381 7590 01/30/2012
Kilpatrick Townsend & Stockton, LLp / Soraa 91756
TWO EMBARCADERO CENTER
EIGHTH FLOOR
SAN FRANCISCO, CA 94111-3834

EXAMINER

ART UNIT	PAPER NUMBER
2811	

NOTIFICATION DATE	DELIVERY MODE
01/30/2012	ELECTRONIC

Please find below and/or attached an Office communication concerning this application or proceeding.

The time period for reply, if any, is set in the attached communication.

Notice of the Office communication was sent electronically on above-indicated "Notification Date" to the following e-mail address(es):

ipefiling@kilpatricktownsend.com

UNITED STATES PATENT AND TRADEMARK OFFICE

Commissioner for Patents
United States Patent and Trademark Office
P.O. Box 1450
Alexandria, VA 22313-1450
www.uspto.gov

Kilpatrick Townsend & Stockton, LLp / Soraa 91756
TWO EMBARCADERO CENTER
EIGHTH FLOOR
SAN FRANCISCO CA 94111-3834

In re Application of	:	
SHARMA et al.	:	DECISION ON PETITION
Application No. 13/163,482	:	TO MAKE SPECIAL UNDER
Filed: June 17, 2011	:	THE GREEN TECHNOLOGY
Attorney Docket No.: 91756-809217 (011710US)	:	PILOT PROGRAM

This is a decision on the petition under 37 CFR 1.102, filed on December 29, 2011, to make the above-identified application special under the pilot program for applications pertaining to Green Technologies as set forth 74 Federal Register Notice 64666 (December 8, 2009) and amended by 75 Federal Register Notice 28554 (May 21, 2010) and 75 Federal Register Notice 69049 (November 10, 2010).

The petition is **DISMISSED**.

If reconsideration of this decision is desired, a petition for reconsideration must be filed within ONE (1) MONTH OR THIRTY (30) DAYS from the mail date of this decision, whichever is longer. No extension of this time limit can be granted under 37 CFR 1.136(a) or (b). The petition for reconsideration should include an exhaustive attempt to provide the lacking item(s) noted below, since, after a decision on the petition for reconsideration, no further reconsideration or review of the matter will be undertaken by the Director.

A grantable petition to make an application special under 37 CFR 1.102 and the pilot program as set forth in 74 FR 64666 must be directed to a nonprovisional application filed under 35 USC 111(a) or be a national stage entry under 35 USC 371, exclusive of any reissue applications and be filed prior to the date of the notice, December 8, 2009.

In order to qualify for special status, the following requirements must be met. 1) The application must have no more than 3 independent claims and no more than 20 total claims. 2) The application must not contain any multiple dependent claims. 3) The petition must state the basis for seeking special status, i.e., the claimed invention either: A) materially enhances the quality of the environment or B) materially contributes to: i) the discovery or development of renewable energy resources, ii) the more efficient utilization and conservation of energy resources, or iii) greenhouse gas emission reduction. 4) If the disclosure is not clear on its face that the claimed invention materially contributes under category (A) or (B), the petition must be accompanied by a statement by the applicant, assignee, or an attorney/agent registered to practice before the

Office explaining how the materiality standard is met. 5) A statement that applicant will agree to make an election without traverse in a telephonic interview if a restriction requirement is made by the examiner. 6) The petition to make special must be filed electronically. 7) The petition must be filed at least one day prior to the date that a first Office Action appears in the Patent Application Information Retrieval (PAIR) system. 8) The petition must be accompanied by a request for early publication in compliance with 37 CFR 1.219 and include the publication fee as set forth in 37 CFR 1.18(d).

The requirement for a fee for consideration of the petition to make special for applications pertaining to Green Technologies has been waived.

The petition lacks item 4.

In regard to item 4, the petition alleges that the claimed invention contributes to the discovery or development of renewable energy. The claims are generally drawn to a gallium and nitrogen containing substrate. The provided statement accompanying the petition statesthe substrates are particularly suited for use in the manufacture of light-emitting diodes (LEDs). The materiality standard does not permit an applicant to speculate as to how a hypothetical end-user might specially apply the invention in a manner that could contribute to development of renewable energy resources. Any argument as to how the claimed invention can be used with is considered speculative as to how a hypothetical end-user might specially apply the claimed invention. Favorable consideration could be given were the claims limited to LEDs, rather than being broadly drawn to a substrate.

Any reconsideration of this decision should be submitted through the USPTO electronic filing system, EFS-Web, and selecting the document description of "Petition for Green Tech Pilot" on the EFS-Web screen.

Telephone inquiries concerning this decision should be directed to Colleen Dunn at 571-272-1170.

The application is being forwarded to the Technology Center Art Unit for action in its regular turn.

/Colleen Dunn/

Colleen Dunn
TQAS, TC 2800

PATENT
Docket No.: 91756-809217 (011710US)

IN THE UNITED STATES PATENT AND TRADEMARK OFFICE

In re application of:

Rajat Sharma et al.

Application No.: 13/163,482

Filed: June 17, 2011

For: GALLIUM AND NITROGEN CONTAINING TRIANGULAR OR DIAMOND-SHAPED CONFIGURATION FOR OPTICAL DEVICES

Customer No.: 20350

Confirmation No.: 9780

Examiner: Unassigned

Art Unit: 2811

RENEWED PETITION TO MAKE SPECIAL
UNDER THE GREEN TECHNOLOGY PILOT PROGRAM

Commissioner for Patents
P.O. Box 1450
Alexandria, VA 22313-1450

Commissioner:

Applicant hereby renews its request to participate in the Green Technology Pilot Program for the above-identified application. The previous petition filed herein was denied, but a statement was made that "Favorable consideration could be given were the claims limited to LEDs, rather than being broadly drawn to a substrate." With a concurrently filed preliminary amendment, new claims 19 and 20 have been added, and these claims are so limited.

STATEMENTS OF SPECIAL STATUS FOR THE ELIGIBILITY REQUIREMENT

The application is a non-reissue, non-provisional utility application filed under 35 USC §111(a). The application contains no more than three independent claims, twenty or fewer total claims, and no multiple dependent claims.

By filing this petition:

Applicant believes the pending claims in this application are directed to a single invention that materially contributes to the discovery or development of renewable energy

resources. The claimed invention relates to gallium-nitride substrates particularly suited for use in the manufacture of light-emitting diodes. The resulting light-emitting diodes are used to provide low power electric lights, e.g., for the replacement of inefficient incandescent light bulbs. Claims 19 and 20, added by a preliminary amendment require that the substrate of claim 19 include light emitting diodes, while claim 20 requires the method defined by the claimed steps be performed on a substrate having light emitting diodes.

Applicant hereby agrees to make an election without traverse in a telephonic interview and elect an invention that meets the eligibility requirements set forth in the notice titled "Pilot Program for Green Technologies Including Greenhouse Gas Reduction," as modified by the notice titled "Elimination of Classification Requirement in the Green Technology Pilot Program," each which was published in the Federal Register, if the Office determines that the claims are not obviously directed to a single invention.

If the Office believes a telephone conference would expedite prosecution of this application, please telephone the undersigned at 650-324-6303 (direct).

Respectfully submitted,

/Robert C. Colwell/

Robert C. Colwell
Reg. No. 27,431

KILPATRICK TOWNSEND & STOCKTON LLP
Two Embarcadero Center, Eighth Floor
San Francisco, California 94111-3834
Tel: (415) 576-0200
Fax: (415) 576-0300
RCC:mks

63973922 v1

UNITED STATES PATENT AND TRADEMARK OFFICE

UNITED STATES DEPARTMENT OF COMMERCE
United States Patent and Trademark Office
Address: COMMISSIONER FOR PATENTS
P.O. Box 1450
Alexandria, Virginia 22313-1450
www.uspto.gov

APPLICATION NO.	FILING DATE	FIRST NAMED INVENTOR	ATTORNEY DOCKET NO.	CONFIRMATION NO.
13/163,482	06/17/2011	Rajat Sharma	91756-809217 (011710US)	9780

101381 7590 03/09/2012
Kilpatrick Townsend & Stockton, LLp / Soraa 91756
TWO EMBARCADERO CENTER
EIGHTH FLOOR
SAN FRANCISCO, CA 94111-3834

EXAMINER
GURLEY, LYNNE ANN

ART UNIT	PAPER NUMBER
2811	

NOTIFICATION DATE	DELIVERY MODE
03/09/2012	ELECTRONIC

Please find below and/or attached an Office communication concerning this application or proceeding.

The time period for reply, if any, is set in the attached communication.

Notice of the Office communication was sent electronically on above-indicated "Notification Date" to the following e-mail address(es):

ipefiling@kilpatricktownsend.com

UNITED STATES PATENT AND TRADEMARK OFFICE

Commissioner for Patents
United States Patent and Trademark Office
P.O. Box 1450
Alexandria, VA 22313-1450
www.uspto.gov

Kilpatrick Townsend & Stockton, LLp / Soraa 91756
TWO EMBARCADERO CENTER
EIGHTH FLOOR
SAN FRANCISCO CA 94111-3834

In re Application of	:	
Rajat Sharma et al.	:	DECISION ON PETITION
Application No. 13/163,482	:	TO MAKE SPECIAL UNDER
Filed: June 17, 2011	:	THE GREEN TECHNOLOGY
Attorney Docket No. 91756-809217 (011710US)	:	PILOT PROGRAM

This is a decision on the petition under 37 CFR 1.102, filed February 29, 2012, to make the above-identified application special under the pilot program for applications pertaining to Green Technologies as set forth in 74 Federal Register Notice 64666 (December 8, 2009) and amended by 75 Federal Register Notice 28554 (May 21, 2010), 75 Federal Register Notice 69049 (November 10, 2010) and 76 Federal Register Notice 77979 (December 15, 2011).

The petition is **GRANTED**.

A grantable petition to make an application special under 37 CFR 1.102 and the pilot program as set forth in 74 FR 64666 must be directed to a nonprovisional application filed under 35 USC 111(a) or be a national stage entry under 35 USC 371, exclusive of any reissue applications.

In order to qualify for special status, the following requirements must be met. 1) The application must have no more than 3 independent claims and no more than 20 total claims. 2) The application must not contain any multiple dependent claims. 3) The petition must state the basis for seeking special status, i.e., the claimed invention either: A) materially enhances the quality of the environment or B) materially contributes to: i) the discovery or development of renewable energy resources, ii) the more efficient utilization and conservation of energy resources, or iii) greenhouse gas emission reduction. 4) If the disclosure is not clear on its face that the claimed invention materially contributes under category (A) or (B), the petition must be accompanied by a statement by the applicant, assignee, or an attorney/agent registered to practice before the Office explaining how the materiality standard is met. 5) A statement that applicant will agree to make an election without traverse in a telephonic interview if a restriction requirement is made by the examiner. 6) The petition to make special must be filed electronically. 7) The petition must be filed at least one day prior to the date that a first Office Action appears in the Patent Application Information Retrieval (PAIR) system. 8) The petition must be accompanied by a request for early publication in compliance with 37 CFR 1.219 and include the publication fee as set forth in 37 CFR 1.18(d).

The requirement for a fee for consideration of the petition to make special for applications pertaining to Green Technologies has been waived.

The instant petition complies with items 1 – 8 above. Accordingly, the above-identified application has been accorded "special" status.

Telephone inquires concerning this decision should be directed to Blaine Copenheaver at 571-272-1156.

The application is being forwarded to the examiner for action on the merits commensurate with this decision.

/Blaine Copenheaver/

Blaine Copenheaver
Quality Assurance Specialist
Technology Center 1700

PATENT
Docket No.: 91756-809236 (011610US)

IN THE UNITED STATES PATENT AND TRADEMARK OFFICE

In re application of:	Confirmation No.: 9815
Rajat Sharma et al.	Examiner: Unassigned
Application No.: 13/163,498	Art Unit: 2811
Filed: June 17, 2011	
For: SINGULATION METHOD AND RESULTING DEVICE OF THICK GALLIUM AND NITROGEN CONTAINING SUBSTRATES	PETITION TO MAKE SPECIAL UNDER THE GREEN TECHNOLOGY PILOT PROGRAM
Customer No.: 101381	

Commissioner for Patents
P.O. Box 1450
Alexandria, VA 22313-1450

Commissioner:

Applicant hereby requests to participate in the Green Technology Pilot Program for the above-identified application. Applicant is herewith submitting a request for early publication together with the requisite fee of $300.00.

STATEMENTS OF SPECIAL STATUS FOR THE ELIGIBILITY REQUIREMENT

The application is a non-reissue, non-provisional utility application filed under 35 USC §111(a). The application contains no more than three independent claims, twenty or fewer total claims, and no multiple dependent claims.

By filing this petition:

Applicant believes the pending claims in this application are directed to a single invention that materially contributes to the discovery or development of renewable energy resources. The claimed invention relates to methods for more efficiently manufacturing light-emitting diodes, resulting in lower cost light emitting diodes. The resulting light-emitting diodes

are used to provide low power consumption electric lights, e.g., for the replacement of inefficient incandescent light bulbs.

Applicant hereby agrees to make an election without traverse in a telephonic interview and elect an invention that meets the eligibility requirements set forth in the notice titled "Pilot Program for Green Technologies Including Greenhouse Gas Reduction," as modified by the notice titled "Elimination of Classification Requirement in the Green Technology Pilot Program," each which was published in the Federal Register, if the Office determines that the claims are not obviously directed to a single invention.

If the Office believes a telephone conference would expedite prosecution of this application, please telephone the undersigned at 650-324-6303 (direct).

Respectfully submitted,

/Robert C. Colwell/

Robert C. Colwell
Reg. No. 27,431

KILPATRICK TOWNSEND & STOCKTON LLP
Two Embarcadero Center, Eighth Floor
San Francisco, California 94111-3834
Tel: (415) 576-0200
Fax: (415) 576-0300
RCC:mks

63897949 v1

PETITION TO MAKE SPECIAL UNDER THE GREEN TECHNOLOGY PILOT PROGRAM

Attorney Docket Number: 91756-809236	Application Number (if known): 13/163,498	Filing date: June 17, 2011
First Named Inventor: Sharma, Rajat		
Title: SINGULATION METHOD AND RESULTING DEVICE OF THICK GALLIUM AND NITROGEN CONTAINING SUBSTRATES		

APPLICANT HEREBY REQUESTS TO PARTICIPATE IN THE GREEN TECHNOLOGY PILOT PROGRAM FOR THE ABOVE-IDENTIFIED APPLICATION. See Instruction Sheet on page 2.

This petition must be timely filed electronically using the USPTO electronic filing system, EFS-Web.

1. By filing this petition:

   Applicant is requesting early publication: Applicant hereby requests early publication under 37 CFR 1.219 and the publication fee set forth in 37 CFR 1.18(d) accompanies this request.

2. By filing this petition: applicant is agreeing to make an election without traverse in a telephonic interview and elect an invention that meets the eligibility requirements for the Green Technology Pilot Program, if the Office determines that the claims are not obviously directed to a single invention. See Instruction Sheet.

3. This request is accompanied by statements of special status for the eligibility requirement.

4. The application contains no more than three (3) independent claims and twenty (20) total claims.

5. The application does not contain any multiple dependent claims.

6. Other attachments:_____

Signature /Robert C. Colwell/	Date December 27, 2011
Name (Print/Typed) Robert C. Colwell	Registration Number 27,431

***Note**: Signatures of all the inventors or assignees of record of the entire interest or their representative(s) are required in accordance with 37 CFR 1.33 and 11.18. Please see 37 CFR 1.4(d) for the form of the signature. If necessary, submit multiple forms for more than one signature, see below*.*

☐ *Total of_____forms are submitted.

Instruction Sheet for
Petition to Make Special Under the Green Technology Pilot Program

(Not to be Submitted to the USPTO)

The following is a summary of the requirements (for more information see notices (i) "Pilot Program for Green Technologies Including Greenhouse Gas Reduction," (ii) "Elimination of Classification Requirement in the Green Technology Pilot Program," and (iii) Expansion and Extension of the Green Technology Pilot Program," available on the USPTO web site at http:// www.uspto.gov/patents/init_events/green_tech.jsp):

1) The application must be a non-reissue, non-provisional utility application filed under 35 U.S.C. 111 (a), or an international application that has entered the national stage in compliance with 35 U.S.C. 371, irrespective of the filing date of the application. Reexamination proceedings are excluded from this pilot program.

2) The application must contain three or fewer independent claims and twenty or fewer total claims. The application must not contain any multiple dependent claims. For an application that contains more than three independent claims or twenty total claims, or multiple dependent claims, applicant must file a preliminary amendment in compliance with 37 CFR 1.121 to cancel the excess claims and/or the multiple dependent claims at the time the petition to make special is filed.

3) The claims must be directed to a single invention that materially enhances the quality of the environment, or that materially contributes to: (1) the discovery or development of renewable energy resources; (2) the more efficient utilization and conservation of energy resources; or (3) green house gas emission reduction (see the eligibility requirements of sections II and III of the notice (i) cited above). The petition must include a statement that, if the USPTO determines that the claims are directed to multiple inventions (e.g., in a restriction requirement), applicant will agree to make an election without traverse in a telephonic interview, and elect an invention that meets the eligibility requirements in section II or III of the notice (i) cited above.

4) The petition to make special must be timely filed electronically using the USPTO electronic filing system, EFS-Web, and selecting the document description of "Petition for Green Tech Pilot" on the EFS-Web screen. Applicant should use form PTO/SB/420, which is available as a Portable Document Format (PDF) fillable form in EFS-Web and on the USPTO Web site.

5) The petition to make special must be filed at least one day prior to the date that a first Office action (which may be an Office action containing only a restriction requirement) appears in the Patent Application Information Retrieval (PAIR) system. Applicant may check the status of the application using PAIR.

6) The petition to make special must be accompanied by a request for early publication in compliance with 37 CFR 1.219 and the publication fee set forth in 37 CFR 1.18(d).

UNITED STATES PATENT AND TRADEMARK OFFICE

UNITED STATES DEPARTMENT OF COMMERCE
United States Patent and Trademark Office
Address: COMMISSIONER FOR PATENTS
P.O. Box 1450
Alexandria, Virginia 22313-1450
www.uspto.gov

APPLICATION NO.	FILING DATE	FIRST NAMED INVENTOR	ATTORNEY DOCKET NO.	CONFIRMATION NO.
13/163,498	06/17/2011	Rajat Sharma	91756-809236 (011610US)	9815

101381 7590 01/30/2012
Kilpatrick Townsend & Stockton, LLp / Soraa 91756
TWO EMBARCADERO CENTER
EIGHTH FLOOR
SAN FRANCISCO, CA 94111-3834

EXAMINER

ART UNIT	PAPER NUMBER
2811	

NOTIFICATION DATE	DELIVERY MODE
01/30/2012	ELECTRONIC

Please find below and/or attached an Office communication concerning this application or proceeding.

The time period for reply, if any, is set in the attached communication.

Notice of the Office communication was sent electronically on above-indicated "Notification Date" to the following e-mail address(es):

ipefiling@kilpatricktownsend.com

UNITED STATES PATENT AND TRADEMARK OFFICE

Commissioner for Patents
United States Patent and Trademark Office
P.O. Box 1450
Alexandria, VA 22313-1450
www.uspto.gov

Kilpatrick Townsend & Stockton, LLp / Soraa 91756
TWO EMBARCADERO CENTER
EIGHTH FLOOR
SAN FRANCISCO CA 94111-3834

In re Application of	:	
SHARMA et al.	:	DECISION ON PETITION
Application No. 13/163,498	:	TO MAKE SPECIAL UNDER
Filed: June 17, 2011	:	THE GREEN TECHNOLOGY
Attorney Docket No.: 91756-809236 (011610US)	:	PILOT PROGRAM

This is a decision on the petition under 37 CFR 1.102, filed on December 29, 2011, to make the above-identified application special under the pilot program for applications pertaining to Green Technologies as set forth 74 Federal Register Notice 64666 (December 8, 2009) and amended by 75 Federal Register Notice 28554 (May 21, 2010) and 75 Federal Register Notice 69049 (November 10, 2010).

The petition is **DISMISSED**.

If reconsideration of this decision is desired, a petition for reconsideration must be filed within ONE (1) MONTH OR THIRTY (30) DAYS from the mail date of this decision, whichever is longer. No extension of this time limit can be granted under 37 CFR 1.136(a) or (b). The petition for reconsideration should include an exhaustive attempt to provide the lacking item(s) noted below, since, after a decision on the petition for reconsideration, no further reconsideration or review of the matter will be undertaken by the Director.

A grantable petition to make an application special under 37 CFR 1.102 and the pilot program as set forth in 74 FR 64666 must be directed to a nonprovisional application filed under 35 USC 111(a) or be a national stage entry under 35 USC 371, exclusive of any reissue applications and be filed prior to the date of the notice, December 8, 2009.

In order to qualify for special status, the following requirements must be met. 1) The application must have no more than 3 independent claims and no more than 20 total claims. 2) The application must not contain any multiple dependent claims. 3) The petition must state the basis for seeking special status, i.e., the claimed invention either: A) materially enhances the quality of the environment or B) materially contributes to: i) the discovery or development of renewable energy resources, ii) the more efficient utilization and conservation of energy resources, or iii) greenhouse gas emission reduction. 4) If the disclosure is not clear on its face that the claimed invention materially contributes under category (A) or (B), the petition must be accompanied by a statement by the applicant, assignee, or an attorney/agent registered to practice before the

Office explaining how the materiality standard is met. 5) A statement that applicant will agree to make an election without traverse in a telephonic interview if a restriction requirement is made by the examiner. 6) The petition to make special must be filed electronically. 7) The petition must be filed at least one day prior to the date that a first Office Action appears in the Patent Application Information Retrieval (PAIR) system. 8) The petition must be accompanied by a request for early publication in compliance with 37 CFR 1.219 and include the publication fee as set forth in 37 CFR 1.18(d).

The requirement for a fee for consideration of the petition to make special for applications pertaining to Green Technologies has been waived.

The petition lacks item 4.

In regard to item 4, the petition alleges that the claimed invention contributes to the discovery or development of renewable energy. The claims are generally drawn to a method for separating die from a gallium and nitrogen containing substrate. The provided statement accompanying the petition states that the invention relates to more efficient manufacture of light-emitting diodes (LEDs). The materiality standard does not permit an applicant to speculate as to how a hypothetical end-user might specially apply the invention in a manner that could contribute to development of renewable energy resources. Any argument as to how the claimed invention can be used with is considered speculative as to how a hypothetical end-user might specially apply the claimed invention. Favorable consideration could be given were the claims limited to LEDs, rather than being broadly drawn to a substrate.

Any reconsideration of this decision should be submitted through the USPTO electronic filing system, EFS-Web, and selecting the document description of "Petition for Green Tech Pilot" on the EFS-Web screen.

Telephone inquiries concerning this decision should be directed to Colleen Dunn at 571-272-1170.

The application is being forwarded to the Technology Center Art Unit for action in its regular turn.

/Colleen Dunn/

Colleen Dunn
TQAS, TC 2800

PATENT
Docket No.: 91756-809236 (011610US)

IN THE UNITED STATES PATENT AND TRADEMARK OFFICE

In re application of:	Confirmation No.: 9815
Rajat Sharma et al.	Examiner: Unassigned
Application No.: 13/163,498	Art Unit: 2811
Filed: June 17, 2011	
For: SINGULATION METHOD AND RESULTING DEVICE OF THICK GALLIUM AND NITROGEN CONTAINING SUBSTRATES	RENEWED PETITION TO MAKE SPECIAL UNDER THE GREEN TECHNOLOGY PILOT PROGRAM
Customer No.: 101381	

Commissioner for Patents
P.O. Box 1450
Alexandria, VA 22313-1450

Commissioner:

Applicant hereby renews its request to participate in the Green Technology Pilot Program for the above-identified application. The previous petition filed herein was denied, but a statement was made that "Favorable consideration could be given were the claims limited to LEDs, rather than being broadly drawn to a substrate." With a concurrently filed preliminary amendment, new claims 16-17 have been added, and these claims are so limited.

STATEMENTS OF SPECIAL STATUS FOR THE ELIGIBILITY REQUIREMENT

The application is a non-reissue, non-provisional utility application filed under 35 USC §111(a). The application contains no more than three independent claims, twenty or fewer total claims, and no multiple dependent claims.

By filing this petition:

Applicant believes the pending claims in this application are directed to a single invention that materially contributes to the discovery or development of renewable energy resources. The claimed invention relates to methods for more efficiently manufacturing light-

emitting diodes, resulting in lower cost light emitting diodes. The resulting light-emitting diodes are used to provide low power consumption electric lights, e.g., for the replacement of inefficient incandescent light bulbs. Claims 16 and 17, added by a preliminary amendment require that the processes defined by those claims be performed on a substrate having light emitting diodes.

Applicant hereby agrees to make an election without traverse in a telephonic interview and elect an invention that meets the eligibility requirements set forth in the notice titled "Pilot Program for Green Technologies Including Greenhouse Gas Reduction," as modified by the notice titled "Elimination of Classification Requirement in the Green Technology Pilot Program," each which was published in the Federal Register, if the Office determines that the claims are not obviously directed to a single invention.

If the Office believes a telephone conference would expedite prosecution of this application, please telephone the undersigned at 650-324-6303 (direct).

Respectfully submitted,

/Robert C. Colwell/

Robert C. Colwell
Reg. No. 27,431

KILPATRICK TOWNSEND & STOCKTON LLP
Two Embarcadero Center, Eighth Floor
San Francisco, California 94111-3834
Tel: (415) 576-0200
Fax: (415) 576-0300
RCC:mks;vmg

63973874 v1

Best Available Copy

UNITED STATES PATENT AND TRADEMARK OFFICE

UNITED STATES DEPARTMENT OF COMMERCE
United States Patent and Trademark Office
Address: COMMISSIONER FOR PATENTS
P.O. Box 1450
Alexandria, Virginia 22313-1450
www.uspto.gov

APPLICATION NO.	FILING DATE	FIRST NAMED INVENTOR	ATTORNEY DOCKET NO.	CONFIRMATION NO.
13/163,498	06/17/2011	Rajat Sharma	91756-809236 (011610US)	9815

101381 7590 03/09/2012
Kilpatrick Townsend & Stockton, LLp / Soraa 91756
TWO EMBARCADERO CENTER
EIGHTH FLOOR
SAN FRANCISCO, CA 94111-3834

EXAMINER
GURLEY, LYNNE ANN

ART UNIT	PAPER NUMBER
2811	

NOTIFICATION DATE	DELIVERY MODE
03/09/2012	ELECTRONIC

Please find below and/or attached an Office communication concerning this application or proceeding.

The time period for reply, if any, is set in the attached communication.

Notice of the Office communication was sent electronically on above-indicated "Notification Date" to the following e-mail address(es):

ipefiling@kilpatricktownsend.com

Best Available Copy

UNITED STATES PATENT AND TRADEMARK OFFICE

Commissioner for Patents
United States Patent and Trademark Office
P.O. Box 1450
Alexandria, VA 22313-1450
www.uspto.gov

Kilpatrick Townsend & Stockton, LLp / Soraa 91756
TWO EMBARCADERO CENTER
EIGHTH FLOOR
SAN FRANCISCO CA 94111-3834

In re Application of	:	
Rajat Sharma et al.	:	DECISION ON PETITION
Application No. 13/163,498	:	TO MAKE SPECIAL UNDER
Filed: June 17, 2011	:	THE GREEN TECHNOLOGY
Attorney Docket No. 91756-809236 (011610US)	:	PILOT PROGRAM

This is a decision on the petition under 37 CFR 1.102, filed February 29, 2012, to make the above-identified application special under the pilot program for applications pertaining to Green Technologies as set forth in 74 Federal Register Notice 64666 (December 8, 2009) and amended by 75 Federal Register Notice 28554 (May 21, 2010), 75 Federal Register Notice 69049 (November 10, 2010) and 76 Federal Register Notice 77979 (December 15, 2011).

The petition is **GRANTED**.

A grantable petition to make an application special under 37 CFR 1.102 and the pilot program as set forth in 74 FR 64666 must be directed to a nonprovisional application filed under 35 USC 111(a) or be a national stage entry under 35 USC 371, exclusive of any reissue applications.

In order to qualify for special status, the following requirements must be met. 1) The application must have no more than 3 independent claims and no more than 20 total claims. 2) The application must not contain any multiple dependent claims. 3) The petition must state the basis for seeking special status, i.e., the claimed invention either: A) materially enhances the quality of the environment or B) materially contributes to: i) the discovery or development of renewable energy resources, ii) the more efficient utilization and conservation of energy resources, or iii) greenhouse gas emission reduction. 4) If the disclosure is not clear on its face that the claimed invention materially contributes under category (A) or (B), the petition must be accompanied by a statement by the applicant, assignee, or an attorney/agent registered to practice before the Office explaining how the materiality standard is met. 5) A statement that applicant will agree to make an election without traverse in a telephonic interview if a restriction requirement is made by the examiner. 6) The petition to make special must be filed electronically. 7) The petition must be filed at least one day prior to the date that a first Office Action appears in the Patent Application Information Retrieval (PAIR) system. 8) The petition must be accompanied by a request for early publication in compliance with 37 CFR 1.219 and include the publication fee as set forth in 37 CFR 1.18(d).

Best Available Copy

The requirement for a fee for consideration of the petition to make special for applications pertaining to Green Technologies has been waived.

The instant petition complies with items 1 – 8 above. Accordingly, the above-identified application has been accorded "special" status.

Telephone inquires concerning this decision should be directed to Blaine Copenheaver at 571-272-1156.

The application is being forwarded to the examiner for action on the merits commensurate with this decision.

/Blaine Copenheaver/

Blaine Copenheaver
Quality Assurance Specialist
Technology Center 1700

UNITED STATES PATENT AND TRADEMARK OFFICE

Commissioner for Patents
United States Patent and Trademark Office
P.O. Box 1450
Alexandria, VA 22313-1450
www.uspto.gov

SEP 16 2011

Faegre & Benson LLP
90 South Seventh Street
2200 Wells Fargo Center
Minneapolis MN 55402-3901

In re Application of: James Browning Application No.: 13/163501 Filed: June 17, 2011 Title: PELVIC IMPLANT WITH FIBROUS ANCHOR	:	DECISION ON PETITION TO MAKE SPECIAL FOR NEW APPLICATION UNDER 37 C.F.R. § 1.102 & M.P.E.P. § 708.02

This is a decision on the petition filed on June 17, 2011 to make the above-identified application special for accelerated examination procedure under 37 C.F.R. § 1.102(d).

The petition to make the application special is **DISMISSED**.

REGULATION AND PRACTICE

A grantable petition to make special under 37 C.F.R. § 1.102(d) and pursuant to the "Change to Practice for Petitions in Patent Applications to Make Special and for Accelerated Examination" published in the Federal Register on June 26, 2006 (71 Fed. Reg. 36323), must satisfy the following conditions:

I. Conditions Regarding the Application:

1. the application must be a non-reissue utility or design application filed under 37 CFR 1.111(a);
2. the application, the petition and the required fees must be filed electronically using the USPTO's electronic filing system (EFS), or EFS-web; if not filed electronically, a statement asserting that EFS and EFS-web were not available during the normal business hours.
3. at the time of filing, the application must be complete under 37 CFR 1.51 and in condition for examination;
4. the application must contain three or fewer independent claims and twenty or fewer total claims and the claims must be directed to a single invention.

II. Conditions Regarding the Petition:

The petition must:

1. be filed with the application;
2. include a statement that applicant agrees not to separately argue the patentability of any independent claim during any appeal in the application;

3. include a statement that applicant agrees to make an election without traverse in a telephone interview.

4. include a statement that applicant agrees to conduct such an interview when requested by the examiner.

5. include a statement, made based on a good faith belief, that a preexamination search in compliance with the following requirements, was conducted, including an identification of the field of search by United States class and subclass, where applicable, and for database searches, the search logic or chemical structure or sequence used as a query, the name of the file(s) searched and the database service, and the date of the search.

The preexamination search must:

5.1 involve U.S. patents and patent application publications, foreign patent documents, and non-patent literature, unless the applicant can justify with reasonable certainty that no references more pertinent than those already identified are likely to be found in the eliminated sources and includes such a justification with this statement;

5.2. be directed to the claimed invention and encompass all of the features of the claims, giving the claims the broadest reasonable interpretation;

5.3. encompass the disclosed features that may be claimed.

6. must provide in support of the petition an accelerated examination support document. An accelerated examination support document must include:

6.1. an information disclosure statement (IDS) in compliance with 37 CFR 1.98 citing each reference deemed most closely related to the subject matter of each of the claims;

6.2. an identification of all the limitations in the claims that are disclosed by the reference specifying where the limitation is disclosed in the cited reference;

6.3. a detailed explanation of how each of the claims are patentable over the references cited with particularity required by 37 CFR 1.111(b) and (c);

6.4. a concise statement of the utility of the invention as defined in each of the independent claims (unless the application is a design application);

6.5. a showing of where each limitation of the claims finds support under 35 U.S.C. 112, first paragraph, in the written description of the specification. If applicable, the showing must also identify: (1) each means- (or step) plus-function claim element that invokes consideration under 35 U.S.C. 112, sixth paragraph; and (2) the structure, material, or acts in the specification that corresponds to each means- (or step) plus-function claim element that invokes consideration under 35 U.S.C. 112, sixth paragraph; if the application claims the benefit of one or more applications under title 35, United States Code, the showing must also include where each limitation of the claims finds support under 35 U.S.C. 112, first paragraph, in each such application in which such supports exists;

6.6. an identification of any cited references that may be disqualified under 35 U.S.C. 103(c).

REVIEW OF FACTS

The conditions I:1-4, II: 1-5, 5.3, 6, 6.1, 6.2, 6.3, 6.4, and 6.6 above are considered to have been met. However, the petition fails to comply with conditions II : 5.1, 5.2, and 6.5 above.

Therefore, the petition fails to meet the required conditions to be accorded special status under the accelerated examination procedure.

Discussion

When referring to "the petition" hereinbelow, the received papers under consideration include the PTO/SB/28 form, the "pre-examination search document" including pages 1-5; the "accelerated examination support document" comprising pages 1-29, and an Information Disclosure Statement including form PTO/SB/08A.

Regarding the requirements of section II element 5.1 and 5.2 outlined above, it appears the search outlined in the petition omitted a critical search area by not searching in class 600 subclass 31; class 128 subclass 898; class 606 subclasses 152-158, 139-150, 228-232; and class 623 subclasses 11.11, 14.13, 23.72, 23.73, and 23.74.

Regarding the requirements of section II element 6.5 outlined above, the requirements of this section are not met. A grantable petition requires petitioner to provide a showing of where each limitation of the claims finds support under 35 U.S.C. 112, first paragraph, in the written description of the specification. If applicable, the showing must also identify: (1) each means- (or step) plus-function claim element that invokes consideration under 35 U.S.C. 112, sixth paragraph; and (2) the structure, material, or acts in the specification that corresponds to each means- (or step) plus-function claim element that invokes consideration under 35 U.S.C. 112, sixth paragraph; if the application claims the benefit of one or more applications under title 35, United States Code, the showing must also include where each limitation of the claims finds support under 35 U.S.C. 112, first paragraph, in each such application in which such supports exists. In the instant petition, a showing under 35 U.S.C. 112, first paragraph has not been made for priority document GB0025068.8 has not been made. It appears petitioner should show how such benefit is proper since the filing date of this document appears to be more than one year from the earliest filed US application. Also petitioner's first paragraph in section 9(E) of the AESD refers to different priority document than those of which benefit was claimed.

DECISION

For the above-stated reasons, the petition is **dismissed**. The application will therefore be taken up by the examiner for action in its regular turn.

Petitioner is given a single opportunity to perfect the petition. Any request for reconsideration of this decision must be submitted within 1 (one) month or 30 (thirty) days, whichever is longer, (no extension of time under 37 CFR 1.136(a)) from the date of this decision in order to be considered timely. Any request for reconsideration must address all of the deficiencies indicated above.

Petitioner is reminded that, upon granting of the special status of the application on request for reconsideration, the application will be processed expeditiously. However, due to the dismissal

of the instant petition, examination may not be completed within twelve months of the filing date of the application.

Any inquiry regarding this decision should be directed to Linda J. Sholl, TC 3700 Special Programs Examiner, at (571) 272-4391.

/Linda J. Sholl/
Linda J. Sholl
Special Programs Examiner
Technology Center 3700

UNITED STATES PATENT AND TRADEMARK OFFICE

Commissioner for Patents
United States Patent and Trademark Office
P.O. Box 1450
Alexandria, VA 22313-1450
www.uspto.gov

NOV 01 2011

Faegre & Benson LLP
90 South Seventh Street
2200 Wells Fargo Center
Minneapolis MN 55402-3901

In re Application of: James Browning Application No.: 13/163501 Filed: June 17, 2011 Title: PELVIC IMPLANT WITH FIBROUS ANCHOR	DECISION ON PETITION TO MAKE SPECIAL FOR NEW APPLICATION UNDER 37 C.F.R. § 1.102 & M.P.E.P. § 708.02

This is a decision on the renewed petition filed on October 12, 2011 to make the above-identified application special for accelerated examination procedure under 37 C.F.R. § 1.102(d). A supplement to the renewed petition was filed on October 14, 2011.

The petition to make the application special is GRANTED.

The application is eligible for accelerated examination and the petition complies with the conditions for granting the application special status pursuant to the "Change to Practice for Petitions in Patent Applications to Make Special and for Accelerated Examination" published June 26, 2006, in the Federal Register. (71 Fed. Reg. 36323).

The prosecution of the instant application will be conducted expeditiously according to the following guidelines.

1. The application will be docketed to an examiner and taken up for action within two weeks of the date of this decision.

2. Restriction Practice:
   If the examiner determines that the claims are not directed to a single invention, a telephone request to elect one single invention will be made pursuant to MPEP 812.01. As a prerequisite to the grant of this petition, the applicant has agreed to make an oral election, by telephone, without traverse. If the applicant refuses to make an election without traverse, or the examiner cannot reach the applicant after a reasonable effort, the examiner will treat the first claimed invention (invention defined by claim 1) as having being constructively elected without traverse for examination.

3. Office action:
   If it is determined that, after appropriate consultation, there is a potential rejection or any other issue to be addressed, the examiner will telephone the applicant and arrange an interview to discuss and resolve the issue. An Office action, other than a Notice of Allowance and Fee(s) Due (Notice of Allowance), will not be issued unless either: 1) an interview was conducted but did not result in agreed to action that places the application in condition for allowance, or, 2) a determination is made that an interview would be unlikely to result in the application being placed in condition for allowance, and 3) an internal conference has been held to review any rejection of any claim.

4. Time for Reply:
   An Office action other than a Notice of Allowance or a final Office action will set a shortened statutory period of one month or thirty days, whichever is longer, for reply with no extension of time available under 37 CFR 1.136(a). Failure to timely file a reply within this non-extendible period for reply will result in the abandonment of the application.

5. Reply by Applicant:
   A timely reply to an Office action other than the Notice of Allowance must be submitted electronically via EFS or EFS-web and limited to addressing the rejections, objections and requirement made. Any amendment that attempts to: 1) add claims which would result in more than three pending independent claims or more than twenty pending total claims; 2) present claims not encompassed by the pre-examination search or an updated accelerated examination support document; or 3) present claims that are directed a non-elected invention or an invention other than that previously claimed and examined in the application, will be treated as not fully responsive and will not be entered.

   For any amendment to the claims (including any new claim) that is not encompassed by the accelerated examination support document, applicant must provide an updated accelerated examination support document that encompasses the amended or new claims at the time of filing of the amendment.

   To proceed expeditiously with the examination, it is recommended that a reply with amendments made to any claim or with any new claim being added be accompanied by an updated accelerated examination support document or a statement explaining how the amended or new claim is supported by the original accelerated examination support document.

6. Information Disclosure Statement (IDS):
   Any IDS filed during prosecution must be submitted electronically via EFS or EFS-web, accompanied by an updated accelerated examination support document, and be in compliance with 37 CFR 1.97 and 1.98.

7. Post-Allowance Processing:
   To expedite processing of the allowed application into a patent, the applicant must: 1) pay the required fees within one month of the date of the Notice of Allowance, and 2) not file any post allowance papers not required by the Office. In no event may the issue fee be paid and accepted later than three months from the date of the Notice of Allowance.

8. After-Final and Appeal Procedures:
   To expedite prosecution, after receiving the final Office action, applicant must: 1) promptly file a notice of appeal, an appeal brief and appeal fees; and 2) not request a pre-appeal brief conference.

   Any amendment, affidavit or other evidence filed after final Office action must comply with applicable rules and the requirements outlined in numbered paragraphs 5 and 6 above.

   On appeal, the application will proceed according to normal appeal procedures. After appeal, the application will again be treated special.

9. Proceedings Outside the Normal Examination Process:
   If the application becomes involved in a proceeding that is outside the normal examination process (e.g., a secrecy order, national security review, interference proceeding, petitions under 37 CFR 1.181, 182 or 183), the application will be treated special before and after such proceeding.

10. Final Disposition:
    The twelve month goal of this accelerated examination procedure ends with a final disposition. The mailing of a final Office action, a Notice of Allowance, the filing of a Notice of Appeal, or the filing of a Request for Continued Examination (RCE) is the final disposition.

If, during prosecution, a paper is not filed electronically using EFS-web, a reply is filed but is not fully responsive, the application is involved in an appeal, or a proceeding outside normal examination process, the application will still be examined expeditiously, however, the final disposition may occur more than twelve months from the filing of the application.

Any inquiry regarding this decision should be directed to Linda Sholl at (571) 272-4391

/Linda Sholl/
Linda Sholl
Special Programs Examiner
Technology Center 3700

UNITED STATES PATENT AND TRADEMARK OFFICE

Commissioner for Patents
United States Patent and Trademark Office
P.O. Box 1450
Alexandria, VA 22313-1450
www.uspto.gov

Faegre & Benson LLP
90 South Seventh Street
2200 Wells Fargo Center
Minneapolis MN 55402-3901

SEP 16 2011

In re Application of: James Browning
Application No.: 13/163509
Filed: June 17, 2011
Title: METHOD FOR FIBROUS ANCHORING OF A PELVIC SUPPORT

DECISION ON PETITION TO MAKE SPECIAL FOR NEW APPLICATION UNDER 37 C.F.R. § 1.102 & M.P.E.P. § 708.02

This is a decision on the petition filed on June 17, 2011 to make the above-identified application special for accelerated examination procedure under 37 C.F.R. § 1.102(d).

The petition to make the application special is **DISMISSED**.

REGULATION AND PRACTICE

A grantable petition to make special under 37 C.F.R. § 1.102(d) and pursuant to the "Change to Practice for Petitions in Patent Applications to Make Special and for Accelerated Examination" published in the Federal Register on June 26, 2006 (71 Fed. Reg. 36323), must satisfy the following conditions:

I. Conditions Regarding the Application:

1. the application must be a non-reissue utility or design application filed under 37 CFR 1.111(a);
2. the application, the petition and the required fees must be filed electronically using the USPTO's electronic filing system (EFS), or EFS-web; if not filed electronically, a statement asserting that EFS and EFS-web were not available during the normal business hours.
3. at the time of filing, the application must be complete under 37 CFR 1.51 and in condition for examination;
4. the application must contain three or fewer independent claims and twenty or fewer total claims and the claims must be directed to a single invention.

II. Conditions Regarding the Petition:

The petition must:

1. be filed with the application;
2. include a statement that applicant agrees not to separately argue the patentability of any independent claim during any appeal in the application;

3. include a statement that applicant agrees to make an election without traverse in a telephone interview.

4. include a statement that applicant agrees to conduct such an interview when requested by the examiner.

5. include a statement, made based on a good faith belief, that a preexamination search in compliance with the following requirements, was conducted, including an identification of the field of search by United States class and subclass, where applicable, and for database searches, the search logic or chemical structure or sequence used as a query, the name of the file(s) searched and the database service, and the date of the search.

The preexamination search must:

5.1 involve U.S. patents and patent application publications, foreign patent documents, and non-patent literature, unless the applicant can justify with reasonable certainty that no references more pertinent than those already identified are likely to be found in the eliminated sources and includes such a justification with this statement;

5.2. be directed to the claimed invention and encompass all of the features of the claims, giving the claims the broadest reasonable interpretation;

5.3. encompass the disclosed features that may be claimed.

6. must provide in support of the petition an accelerated examination support document. An accelerated examination support document must include:

6.1. an information disclosure statement (IDS) in compliance with 37 CFR 1.98 citing each reference deemed most closely related to the subject matter of each of the claims;

6.2. an identification of all the limitations in the claims that are disclosed by the reference specifying where the limitation is disclosed in the cited reference;

6.3. a detailed explanation of how each of the claims are patentable over the references cited with particularity required by 37 CFR 1.111(b) and (c);

6.4. a concise statement of the utility of the invention as defined in each of the independent claims (unless the application is a design application);

6.5. a showing of where each limitation of the claims finds support under 35 U.S.C. 112, first paragraph, in the written description of the specification. If applicable, the showing must also identify: (1) each means- (or step) plus-function claim element that invokes consideration under 35 U.S.C. 112, sixth paragraph; and (2) the structure, material, or acts in the specification that corresponds to each means- (or step) plus-function claim element that invokes consideration under 35 U.S.C. 112, sixth paragraph; if the application claims the benefit of one or more applications under title 35, United States Code, the showing must also include where each limitation of the claims finds support under 35 U.S.C. 112, first paragraph, in each such application in which such supports exists;

6.6. an identification of any cited references that may be disqualified under 35 U.S.C. 103(c).

REVIEW OF FACTS

The conditions I:1-4, II: 1-5, 5.3, 6, 6.1, 6.2, 6.3, 6.4, and 6.6 above are considered to have been met. However, the petition fails to comply with conditions II : 5.1, 5.2, and 6.5 above.

Therefore, the petition fails to meet the required conditions to be accorded special status under the accelerated examination procedure.

Discussion

When referring to "the petition" hereinbelow, the received papers under consideration include the PTO/SB/28 form, the "pre-examination search document" including pages 1-5; the "accelerated examination support document" comprising pages 1-32, and an Information Disclosure Statement including form PTO/SB/08A.

Regarding the requirements of section II element 5.1 and 5.2 outlined above, it appears the search outlined in the petition omitted a critical search area by not searching in class 600 subclass 31; class 128 subclass 898; class 606 subclasses 152-158, 139-150, 228-232; and class 623 subclasses 11.11, 14.13, 23.72, 23.73, and 23.74.

Regarding the requirements of section II element 6.5 outlined above, the requirements of this section are not met. A grantable petition requires petitioner to provide a showing of where each limitation of the claims finds support under 35 U.S.C. 112, first paragraph, in the written description of the specification. If applicable, the showing must also identify: (1) each means- (or step) plus-function claim element that invokes consideration under 35 U.S.C. 112, sixth paragraph; and (2) the structure, material, or acts in the specification that corresponds to each means- (or step) plus-function claim element that invokes consideration under 35 U.S.C. 112, sixth paragraph; if the application claims the benefit of one or more applications under title 35, United States Code, the showing must also include where each limitation of the claims finds support under 35 U.S.C. 112, first paragraph, in each such application in which such supports exists. In the instant petition, a showing under 35 U.S.C. 112, first paragraph has not been made for priority document GB0025068.8 has not been made. It appears petitioner should show how such benefit is proper since the filing date of this document appears to be more than one year from the earliest filed US application. Also petitioner's first paragraph in section 9(E) of the AESD refers to different priority document than those of which benefit was claimed.

DECISION

For the above-stated reasons, the petition is **dismissed**. The application will therefore be taken up by the examiner for action in its regular turn.

Petitioner is given a single opportunity to perfect the petition. Any request for reconsideration of this decision must be submitted within 1 (one) month or 30 (thirty) days, whichever is longer, (no extension of time under 37 CFR 1.136(a)) from the date of this decision in order to be considered timely. Any request for reconsideration must address all of the deficiencies indicated above.

Petitioner is reminded that, upon granting of the special status of the application on request for reconsideration, the application will be processed expeditiously. However, due to the dismissal

of the instant petition, examination may not be completed within twelve months of the filing date of the application.

Any inquiry regarding this decision should be directed to Linda J. Sholl, TC 3700 Special Programs Examiner, at (571) 272-4391.

/Linda J. Sholl/
Linda J. Sholl
Special Programs Examiner
Technology Center 3700

UNITED STATES PATENT AND TRADEMARK OFFICE

Commissioner for Patents
United States Patent and Trademark Office
P.O. Box 1450
Alexandria, VA 22313-1450
www.uspto.gov

NOV 01 2011

Faegre & Benson LLP
90 South Seventh Street
2200 Wells Fargo Center
Minneapolis MN 55402-3901

In re Application of: James Browning Application No.: 13/163509 Filed: June 17, 2011 Title: METHOD FOR FIBROUS ANCHORING OF A PELVIC SUPPORT	DECISION ON PETITION TO MAKE SPECIAL FOR NEW APPLICATION UNDER 37 C.F.R. § 1.102 & M.P.E.P. § 708.02

This is a decision on the renewed petition filed on October 12, 2011 to make the above-identified application special for accelerated examination procedure under 37 C.F.R. § 1.102(d). A supplement to the renewed petition was filed on October 14, 2011.

The petition to make the application special is GRANTED.

The application is eligible for accelerated examination and the petition complies with the conditions for granting the application special status pursuant to the "Change to Practice for Petitions in Patent Applications to Make Special and for Accelerated Examination" published June 26, 2006, in the Federal Register. (71 Fed. Reg. 36323).

The prosecution of the instant application will be conducted expeditiously according to the following guidelines.

1. The application will be docketed to an examiner and taken up for action within two weeks of the date of this decision.

2. Restriction Practice:
   If the examiner determines that the claims are not directed to a single invention, a telephone request to elect one single invention will be made pursuant to MPEP 812.01. As a prerequisite to the grant of this petition, the applicant has agreed to make an oral election, by telephone, without traverse. If the applicant refuses to make an election without traverse, or the examiner cannot reach the applicant after a reasonable effort, the examiner will treat the first claimed invention (invention defined by claim 1) as having being constructively elected without traverse for examination.

3. Office action:
   If it is determined that, after appropriate consultation, there is a potential rejection or any other issue to be addressed, the examiner will telephone the applicant and arrange an interview to discuss and resolve the issue. An Office action, other than a Notice of Allowance and Fee(s) Due (Notice of Allowance), will not be issued unless either: 1) an interview was conducted but did not result in agreed to action that places the application in condition for allowance, or, 2) a determination is made that an interview would be unlikely to result in the application being placed in condition for allowance, and 3) an internal conference has been held to review any rejection of any claim.

4. Time for Reply:
   An Office action other than a Notice of Allowance or a final Office action will set a shortened statutory period of one month or thirty days, whichever is longer, for reply with no extension of time available under 37 CFR 1.136(a). Failure to timely file a reply within this non-extendible period for reply will result in the abandonment of the application.

5. Reply by Applicant:
   A timely reply to an Office action other than the Notice of Allowance must be submitted electronically via EFS or EFS-web and limited to addressing the rejections, objections and requirement made. Any amendment that attempts to: 1) add claims which would result in more than three pending independent claims or more than twenty pending total claims; 2) present claims not encompassed by the pre-examination search or an updated accelerated examination support document; or 3) present claims that are directed a non-elected invention or an invention other than that previously claimed and examined in the application, will be treated as not fully responsive and will not be entered.

   For any amendment to the claims (including any new claim) that is not encompassed by the accelerated examination support document, applicant must provide an updated accelerated examination support document that encompasses the amended or new claims at the time of filing of the amendment.

   To proceed expeditiously with the examination, it is recommended that a reply with amendments made to any claim or with any new claim being added be accompanied by an updated accelerated examination support document or a statement explaining how the amended or new claim is supported by the original accelerated examination support document.

6. Information Disclosure Statement (IDS):
   Any IDS filed during prosecution must be submitted electronically via EFS or EFS-web, accompanied by an updated accelerated examination support document, and be in compliance with 37 CFR 1.97 and 1.98.

7. Post-Allowance Processing:
   To expedite processing of the allowed application into a patent, the applicant must: 1) pay the required fees within one month of the date of the Notice of Allowance, and 2) not file any post allowance papers not required by the Office. In no event may the issue fee be paid and accepted later than three months from the date of the Notice of Allowance.

8. After-Final and Appeal Procedures:
   To expedite prosecution, after receiving the final Office action, applicant must: 1) promptly file a notice of appeal, an appeal brief and appeal fees; and 2) not request a pre-appeal brief conference.

   Any amendment, affidavit or other evidence filed after final Office action must comply with applicable rules and the requirements outlined in numbered paragraphs 5 and 6 above.

   On appeal, the application will proceed according to normal appeal procedures. After appeal, the application will again be treated special.

9. Proceedings Outside the Normal Examination Process:
   If the application becomes involved in a proceeding that is outside the normal examination process (e.g., a secrecy order, national security review, interference proceeding, petitions under 37 CFR 1.181, 182 or 183), the application will be treated special before and after such proceeding.

10. Final Disposition:
    The twelve month goal of this accelerated examination procedure ends with a final disposition. The mailing of a final Office action, a Notice of Allowance, the filing of a Notice of Appeal, or the filing of a Request for Continued Examination (RCE) is the final disposition.

If, during prosecution, a paper is not filed electronically using EFS-web, a reply is filed but is not fully responsive, the application is involved in an appeal, or a proceeding outside normal examination process, the application will still be examined expeditiously, however, the final disposition may occur more than twelve months from the filing of the application.

Any inquiry regarding this decision should be directed to Linda Sholl at (571) 272-4391

/Linda Sholl/
Linda Sholl
Special Programs Examiner
Technology Center 3700

UNITED STATES PATENT AND TRADEMARK OFFICE

Commissioner for Patents
United States Patent and Trademark Office
P.O. Box 1450
Alexandria, VA 22313-1450
www.uspto.gov

Decision Date : February 6, 2012

In re Application of :

Michael YOUSSEFMIR

Application No : 13163512

Filed : 17-Jun-2011

Attorney Docket No : 361912.05113

DECISION ON REQUEST TO WITHDRAW AS ATTORNEY/AGENTOF RECORD

This is an electronic decision on the Request to Withdraw as attorney or agent of record under 37 CFR § 1.36(b), filed February 6, 2012

The request is **APPROVED.**

The request was signed by Marc S. Kaufman (registration no. 35212) on behalf of all attorneys/agents associated with Customer Number 84666 . All attorneys/agents associated with Cusotmer Number 84666 have been withdrawn.

Since there are no remaining attorneys of record, all future communications from the Office will be directed to the first named inventor or assignee that has properly made itself of record pursuant to 37 CFR 3.71, with correspondence address:

Name	Sezmi Corporation
Name2	
Address 1	1301 Shoreway Road
Address 2	Suite 310
City	Belmont
State	CA
Postal Code	94002
Country	US

As a reminder, requester is required to inform the first named inventor or assignee that has properly made itself of record pursuant to 37 CFR 3.71 of the electronically processed petition.

Telephone inquiries concerning this decision should be directed to the Patent Electronic Business Center (EBC) at 866-217-9197.

Office of Petitions

Doc Code: PET.AUTO **Document Description: Petition automatically granted by EFS-Web**	PTO/SB/83 U.S. Patent and Trademark Office Department of Commerce

Electronic Petition Request	**REQUEST FOR WITHDRAWAL AS ATTORNEY OR AGENT AND CHANGE OF CORRESPONDENCE ADDRESS**
Application Number	13163512
Filing Date	17-Jun-2011
First Named Inventor	Michael YOUSSEFMIR
Art Unit	2423
Examiner Name	ANDREW KOENIG
Attorney Docket Number	361912.05113
Title	End of Show Handling

◉ Please withdraw me as attorney or agent for the above identified patent application and the practitioners of record associated with Customer Number: 84666

The reason(s) for this request are those described in 37 CFR:

10.40(b)(4)

Certifications

☒ I/We have given reasonable notice to the client, prior to the expiration of the response period, that the practitioner(s) intend to withdraw from employment

☒ I/We have delivered to the client or a duly authorized representative of the client all papers and property (including funds) to which the client is entitled

☒ I/We have notified the client of any responses that may be due and the time frame within which the client must respond

Change the correspondence address and direct all future correspondence to the first named inventor or assignee that has properly made itself of record pursuant to 37 CFR 3.71:

Name	Sezmi Corporation
Address	1301 Shoreway Road Suite 310
City	Belmont
State	CA
Postal Code	94002
Country	US

I am authorized to sign on behalf of myself and all withdrawing practitioners.	
Signature	/Marc S. Kaufman/
Name	Marc S. Kaufman
Registration Number	35212

Doc Code: PET.GREEN
Document Description: Petition for Green Tech Pilot

PTO/SB/420 (11-10)
Approved for use through 01/31/2011. OMB 0651-0062
U.S. Patent and Trademark Office; U.S. DEPARTMENT OF COMMERCE
Under the Paperwork Reduction Act of 1995, no persons are required to respond to a collection of information unless it displays a valid OMB control number.

PETITION TO MAKE SPECIAL UNDER THE GREEN TECHNOLOGY PILOT PROGRAM

Attorney Docket Number:	23431-80499	Application Number (if known):	13/163,629	Filing date:	June 17, 2011
First Named Inventor:	Liang-Chung Hsu				
Title:	SUBSTRATE DELIVERY DEVICE AND ALIGNER UNIT APPLIED THEREIN				

APPLICANT HEREBY REQUESTS TO PARTICIPATE IN THE GREEN TECHNOLOGY PILOT PROGRAM FOR THE ABOVE-IDENTIFIED APPLICATION. See Instruction Sheet on page 2.

This petition must be timely filed electronically using the USPTO electronic filing system, EFS-Web.

1. By filing this petition:

   Applicant is requesting early publication: Applicant hereby requests early publication under 37 CFR 1.219 and the publication fee set forth in 37 CFR 1.18(d) accompanies this request.

2. By filing this petition: applicant is agreeing to make an election without traverse in a telephonic interview and elect an invention that meets the eligibility requirements for the Green Technology Pilot Program, if the Office determines that the claims are not obviously directed to a single invention. See Instruction Sheet.

3. This request is accompanied by statements of special status for the eligibility requirement.

4. The application contains no more than three (3) independent claims and twenty (20) total claims.

5. The application does not contain any multiple dependent claims.

6. Other attachments: STATEMENT OF SPECIAL STATUS FOR THE ELIGIBILITY REQUIREMENT

Signature	/Tim Tingkang Xia/	Date	June 20, 2011
Name (Print/Typed)	Tim Tingkang Xia	Registration Number	45,242

***Note**: Signatures of all the inventors or assignees of record of the entire interest or their representative(s) are required in accordance with 37 CFR 1.33 and 11.18. Please see 37 CFR 1.4(d) for the form of the signature. If necessary, submit multiple forms if more than one signature, see below*.*

☐ *Total of _____ forms are submitted.

S/N 13/163,629

PATENT
Confirmation No.: 1093

IN THE UNITED STATES PATENT AND TRADEMARK OFFICE

Applicant:	Liang-Chung Hsu et al.	Examiner:	Unassigned
Serial No.:	13/163,629	Group Art Unit:	Unassigned
Filed:	June 17, 2011	Docket:	23431-80499
Title:	SUBSTRATE DELIVERY DEVICE AND ALIGNER UNIT APPLIED THEREIN		

STATEMENT OF SPECIAL STATUS FOR THE ELIGIBILITY REQUIREMENT

Mail Stop: Petition
Commissioner of Patents
P.O. Box 1450
Alexandria, Virginia 22313-1450

June 20, 2011

CUSTOMER NO. 24728

Dear Sir/Madam:

This Statement of Special Status for the Eligibility Requirement is filed pursuant to the requirements listed in PTO/SB/420, filed herewith, and pursuant to the requirements of 74 Fed. Reg. 64,666 (Dec. 8, 2009), as amended by 75 Fed. Reg. 28,554 (May 21, 2010), and 75 Fed. Reg. 69,049 (November 10, 2010).

A basis for the special status is that aspects of the invention relate to ***solar cells*** that ***materially contribute to the discovery or development of renewable energy resources***. Applicant respectfully submits that it is clear on the above-referenced application's face that the claimed invention materially contributes to ***the discovery or development of renewable energy resources***, so no statement is required explaining how the materiality standard is met.

The above-referenced application is a non-reissue, non-provisional utility application filed June 17, 2011 under 35 U.S.C. § 111(a). The application contains no more than three (3) independent claims and twenty (20) total claims. The application does not contain any multiple dependent claims. Further, applicant respectfully submits that the claims of the application are directed to a single invention of a solar cell and manufacturing method thereof. However, if the USPTO determines that the claims are directed to multiple inventions (e.g., in a restriction

requirement), applicant agrees to make an election without traverse in a telephonic interview, and elect an invention that meets the eligibility requirements.

A first Office action (including an Office action containing only a restriction requirement) has not yet appeared in the Patent Application Information Retrieval (PAIR) system.

A request for early publication of the present application in compliance with 37 CFR 1.219 and the publication fee set forth in 37 CFR 1.18(d) are concurrently accompanied herewith this petition.

It is believed that no fee is due. However, the Commissioner is hereby authorized to charge any petition fee under 37 CFR 1.102, and any deficiency of fees which may be required, or to credit of any overpayments to Deposit Account No. 50-3537.

The Applicant respectfully requests that a favorable decision on this Petition to Make Special Under the Green Technology Pilot Program be granted and the application be accorded special status under the Green Technology Pilot Program.

Respectfully submitted,

MORRIS, MANNING & MARTIN, LLP

June 20, 2011

Tim Tingkang Xia
Attorney for Applicant on the Record
Reg. No. 45,242

MORRIS, MANNING & MARTIN, LLP
1600 Atlanta Financial Center
3343 Peachtree Road, N.E.
Atlanta, Georgia 30326-1044
Phone: 404-233-7000
Direct: 404-495-3678
Customer No. 24728

UNITED STATES PATENT AND TRADEMARK OFFICE

UNITED STATES DEPARTMENT OF COMMERCE
United States Patent and Trademark Office
Address: COMMISSIONER FOR PATENTS
P.O. Box 1450
Alexandria, Virginia 22313-1450
www.uspto.gov

APPLICATION NO.	FILING DATE	FIRST NAMED INVENTOR	ATTORNEY DOCKET NO.	CONFIRMATION NO.
13/163,629	06/17/2011	Liang-Chung Hsu	23431-80499	1093

24728 7590 07/13/2011
MORRIS MANNING MARTIN LLP
3343 PEACHTREE ROAD, NE
1600 ATLANTA FINANCIAL CENTER
ATLANTA, GA 30326

EXAMINER

ART UNIT	PAPER NUMBER
3652	

NOTIFICATION DATE	DELIVERY MODE
07/13/2011	ELECTRONIC

Please find below and/or attached an Office communication concerning this application or proceeding.

The time period for reply, if any, is set in the attached communication.

Notice of the Office communication was sent electronically on above-indicated "Notification Date" to the following e-mail address(es):

ipdocket@mmmlaw.com
ppz@mmmlaw.com
jlsmith@mmmlaw.com

UNITED STATES PATENT AND TRADEMARK OFFICE

Commissioner for Patents
United States Patent and Trademark Office
P.O. Box 1450
Alexandria, VA 22313-1450
www.uspto.gov

JUL 12 2011

MORRIS MANNING MARTIN LLP
3343 PEACHTREE ROAD, NE
1600 ATLANTA FINANCIAL CENTER
ATLANTA GA 30326

In re Application of	:	
LIANG-CHUNG HSU et al.	:	DECISION ON PETITION
Application No. 13/163,629	:	TO MAKE SPECIAL UNDER
Filed June 17, 2011	:	THE GREEN TECHNOLOGY
Attorney Docket No. 23431-80499	:	PILOT PROGRAM

This is a decision on the petition under 37 CFR 1.102, filed June 20, 2011 to make the above-identified application special under the pilot program for applications pertaining to Green Technologies as set forth in 74 Federal Register Notice 64666 (December 8, 2009) and amended by 75 Federal Register Notice 28554 (May 21, 2010) and 75 Federal Register Notice 69049 (November 10, 2010).

The petition is **DISMISSED**.

If reconsideration of this decision is desired, a petition for reconsideration must be filed within ONE (1) MONTH OR THIRTY (30) DAYS from the mail date of this decision, whichever is longer. No extension of this time limit can be granted under 37 CFR 1.136(a) or (b). The petition for reconsideration should include an exhaustive attempt to provide the lacking item(s) noted below, since, after a decision on the petition for reconsideration, no further reconsideration or review of the matter will be undertaken by the Director.

A grantable petition to make an application special under 37 CFR 1.102 and the pilot program as set forth in 74 FR 64666 must be directed to a nonprovisional application filed under 35 USC 111(a) or be a national stage entry under 35 USC 371, exclusive of any reissue applications.

In order to qualify for special status, the following requirements must be met. 1) The application must have no more than 3 independent claims and no more than 20 total claims. 2) The application must not contain any multiple dependent claims. 3) The petition must state the basis for seeking special status, i.e., the claimed invention either: A) materially enhances the quality of the environment or B) materially contributes to: i) the discovery or development of renewable energy resources, ii) the more efficient utilization and conservation of energy resources, or iii) greenhouse gas emission reduction. 4) If the disclosure is not clear on its face that the claimed invention materially contributes under category (A) or (B), the petition must be accompanied by a statement by the applicant, assignee, or an attorney/agent registered to practice before the

Office explaining how the materiality standard is met. 5) A statement that applicant will agree to make an election without traverse in a telephonic interview if a restriction requirement is made by the examiner. 6) The petition to make special must be filed electronically. 7) The petition must be filed at least one day prior to the date that a first Office Action appears in the Patent Application Information Retrieval (PAIR) system. 8) The petition must be accompanied by a request for early publication in compliance with 37 CFR 1.219 and include the publication fee as set forth in 37 CFR 1.18(d).

The requirement for a fee for consideration of the petition to make special for applications pertaining to Green Technologies has been waived.

The petition lacks item 4.

In regard to item 4, since a delivery device/aligner unit is basically a conveying system to move a (glass) substrate to its destination, it is merely a support device for a substrate. Furthermore, a substrate would not necessarily result in a solar cell. Since neither the substrate nor the delivery device/aligner unit can convert solar energy to electrical energy, neither the substrate nor the delivery device/aligner unit can materially contribute to the discovery or development of renewable energy resources. As stated in the notice, the materiality standard does not permit an applicant to speculate as to how a hypothetical end-user might specially apply the invention in a manner than could materially contribute to category (A) or (B). *Also see MPEP § 708.02 (VI).* Accordingly, it is unclear as to how the claimed invention would materially contribute to category (B), and it is not agreed that the application on its face meets that materiality standard.

Any reconsideration of this decision should be submitted through the USPTO electronic filing system, EFS-Web, and selecting the document description of "Petition for Green Tech Pilot" on the EFS-Web screen.

Telephone inquiries concerning this decision should be directed to Lanna Mai at 571-272-6867.

The application is being forwarded to the Technology Center Art Unit 3652 for action in its regular turn.

/Lanna Mai/

Lanna Mai
Quality Assurance Specialist
Technology Center 3600

S/N 13/163,629

PATENT
Confirmation No.: 1093

IN THE UNITED STATES PATENT AND TRADEMARK OFFICE

Applicant:	Liang-Chung Hsu et al.	Examiner:	Unassigned
Serial No.:	13/163,629	Group Art Unit:	3652
Filed:	June 17, 2011	Docket:	23431-80499
Title:	SUBSTRATE DELIVERY DEVICE AND ALIGNER UNIT APPLIED THEREIN		

REQUEST FOR RECONSIDERATION OF PETITION UNDER 37 CFR 1.102

Mail Stop: Petition
Commissioner of Patents
P.O. Box 1450
Alexandria, Virginia 22313-1450

August 2, 2011

CUSTOMER NO. 24728

Dear Sir/Madam:

In response to the DECISION ON PETITION TO MAKE SPECIAL UNDER THE GREEN TECHNOLOGY PILOT PROGRAM UNDER 37 CFR 1.182 dated July 13, 2011, submitted herewith is a request for reconsideration of the petition to make special under the green technology pilot program under 37 CFR 1.182.

The above-identified application was filed in the U. S. Patent and Trademark Office (USPTO) on June 17, 2011. A "Petition to Make Special Under the Green Technology Pilot Program" was submitted June 20, 2011. A Petition Decision was issued on July 13, 2011, indicating the petition was dismissed because the petitioner lacks item 4), i.e., "4) If the disclosure is not clear on its face that the claimed invention materially contributes under category (A) or (B), the petition must be accompanied by a statement by the applicant, assignee, or and attorney/agent registered to practice before the Office explaining how the materiality standard is met."

Petitioner appreciate very much the Quality Assurance Specialist's careful review of the petition.

In response, applicant respectfully submits that a basis for the special status is that aspects of the invention relate to ***solar cells*** that ***materially contribute to the discovery or development of renewable energy resources***.

As disclosed in the specification as originally filed, the delivering device is a conveying system for manufacturing substrate of a solar cell. For example, claim 1 of the present invention, recites "[a] delivering device for ***delivering a substrate of a solar cell*** comprising:

a plurality pairs of conveyer rollers arranged along a delivering path, each pair of said conveyer rollers including

a first conveyer roller having a first axis extending perpendicularly to said delivering path,

a first aligner disposed circumferentially on said first conveyer roller and made from polytethrafluoroethylene materials,

a second conveyer roller placed at one side of said delivering path facing said first conveyer roller and having a second axis extending perpendicularly to said delivering path, and

a second aligner disposed circumferentially on said second conveyer roller and made from polytethrafluoroethylene materials;

wherein, said first and second aligners cooperatively define a carrier region for carrying the substrate thereon.". (Emphasis added).

Therefore, the present invention is directly related to the manufacturing of a solar cell and thus contributes to the discovery or development of renewable energy source.

Accordingly, petitioner hereby respectfully request the reconsideration of petition under 37 CFR 1.102. In view of the above, it is believed that no fee is due. However, the Commissioner is hereby authorized to charge any petition fee under 37 CFR 1.102, and any deficiency of fees which may be required, or to credit of any overpayments to Deposit Account No. 50-3537.

The Applicant respectfully requests that a favorable decision on this Petition to Make Special Under the Green Technology Pilot Program be granted and the application be accorded special status under the Green Technology Pilot Program.

Respectfully submitted,

MORRIS, MANNING & MARTIN, LLP

August 2, 2011

Tim Tingkang Xia
Attorney for Applicant on the Record
Reg. No. 45,242

1600 Atlanta Financial Center
3343 Peachtree Road, N.E.
Atlanta, Georgia 30326-1044
Phone: 404-233-7000
Direct: 404-495-3678
Customer No. 24728

S/N 13/163,629

PATENT
Confirmation No.: 1093

IN THE UNITED STATES PATENT AND TRADEMARK OFFICE

Applicant:	Liang-Chung Hsu et al.	Examiner:	Unassigned
Serial No.:	13/163,629	Group Art Unit:	3652
Filed:	June 17, 2011	Docket:	23431-80499
Title:	SUBSTRATE DELIVERY DEVICE AND ALIGNER UNIT APPLIED THEREIN		

STATEMENT OF SPECIAL STATUS FOR THE ELIGIBILITY REQUIREMENT

Mail Stop: Petition
Commissioner of Patents
P.O. Box 1450
Alexandria, Virginia 22313-1450

August 2, 2011

CUSTOMER NO. 24728

Dear Sir/Madam:

This Statement of Special Status for the Eligibility Requirement is filed pursuant to the requirements listed in PTO/SB/420, filed herewith, and pursuant to the requirements of 74 Fed. Reg. 64,666 (Dec. 8, 2009), as amended by 75 Fed. Reg. 28,554 (May 21, 2010), and 75 Fed. Reg. 69,049 (November 10, 2010).

A basis for the special status is that aspects of the invention relate to ***solar cells*** that ***materially contribute to the discovery or development of renewable energy resources***, as supported by the originally filed specification. For example, claim 1 of the present invention, among other things, recites "[a] delivering device for ***delivering a substrate of a solar cell***". Therefore, it is obvious that the present invention is directly related to the manufacturing of a solar cell and thus contributes to the discovery or development of renewable energy source. Accordingly, applicant respectfully submits that the materiality standard is met.

The above-referenced application is a non-reissue, non-provisional utility application filed June 17, 2011 under 35 U.S.C. § 111(a). The application contains no more than three (3) independent claims and twenty (20) total claims. The application does not contain any multiple dependent claims. Further, applicant respectfully submits that the claims of the application are

directed to a single invention of a solar cell and manufacturing method thereof. However, if the USPTO determines that the claims are directed to multiple inventions (e.g., in a restriction requirement), applicant agrees to make an election without traverse in a telephonic interview, and elect an invention that meets the eligibility requirements.

A first Office action (including an Office action containing only a restriction requirement) has not yet appeared in the Patent Application Information Retrieval (PAIR) system.

A request for early publication of the present application in compliance with 37 CFR 1.219 and the publication fee set forth in 37 CFR 1.18(d) were submitted June 20, 2011.

It is believed that no fee is due. However, the Commissioner is hereby authorized to charge any petition fee under 37 CFR 1.102, and any deficiency of fees which may be required, or to credit of any overpayments to Deposit Account No. 50-3537.

The Applicant respectfully requests that a favorable decision on this Petition to Make Special Under the Green Technology Pilot Program be granted and the application be accorded special status under the Green Technology Pilot Program.

Respectfully submitted,

MORRIS, MANNING & MARTIN, LLP

August 2, 2011

Tim Tingkang Xia
Attorney for Applicant on the Record
Reg. No. 45,242

1600 Atlanta Financial Center
3343 Peachtree Road, N.E.
Atlanta, Georgia 30326-1044
Phone: 404-233-7000
Direct: 404-495-3678
Customer No. 24728

UNITED STATES PATENT AND TRADEMARK OFFICE

UNITED STATES DEPARTMENT OF COMMERCE
United States Patent and Trademark Office
Address: COMMISSIONER FOR PATENTS
P.O. Box 1450
Alexandria, Virginia 22313-1450
www.uspto.gov

APPLICATION NO.	FILING DATE	FIRST NAMED INVENTOR	ATTORNEY DOCKET NO.	CONFIRMATION NO.
13/163,629	06/17/2011	Liang-Chung Hsu	23431-80499	1093

24728 7590 08/19/2011
MORRIS MANNING MARTIN LLP
3343 PEACHTREE ROAD, NE
1600 ATLANTA FINANCIAL CENTER
ATLANTA, GA 30326

EXAMINER

ART UNIT	PAPER NUMBER
3651	

NOTIFICATION DATE	DELIVERY MODE
08/19/2011	ELECTRONIC

Please find below and/or attached an Office communication concerning this application or proceeding.

The time period for reply, if any, is set in the attached communication.

Notice of the Office communication was sent electronically on above-indicated "Notification Date" to the following e-mail address(es):

ipdocket@mmmlaw.com
ppz@mmmlaw.com
jlsmith@mmmlaw.com

UNITED STATES PATENT AND TRADEMARK OFFICE

Commissioner for Patents
United States Patent and Trademark Office
P.O. Box 1450
Alexandria, VA 22313-1450
www.uspto.gov

MORRIS MANNING MARTIN LLP
3343 PEACHTREE ROAD, NE
1600 ATLANTA FINANCIAL CENTER
ATLANTA GA 30326

AUG 19 2011

In re Application of	:	
Liang-Chung Hsu et al.	:	DECISION ON PETITION
Application No. 13/163,629	:	TO MAKE SPECIAL UNDER
Filed: June 17, 2011	:	THE GREEN TECHNOLOGY
Attorney Docket No. 23431-80499	:	PILOT PROGRAM

This is a decision on the petition under 37 CFR 1.102, filed August 02, 2011, to make the above-identified application special under the pilot program for applications pertaining to Green Technologies as set forth in 74 Federal Register Notice 64666 (December 8, 2009) and amended by 75 Federal Register Notice 28554 (May 21, 2010) and 75 Federal Register Notice 69049 (November 10, 2010).

The petition is **GRANTED**.

A grantable petition to make an application special under 37 CFR 1.102 and the pilot program as set forth in 74 FR 64666 must be directed to a nonprovisional application filed under 35 USC 111(a) or be a national stage entry under 35 USC 371, exclusive of any reissue applications.

In order to qualify for special status, the following requirements must be met. 1) The application must have no more than 3 independent claims and no more than 20 total claims. 2) The application must not contain any multiple dependent claims. 3) The petition must state the basis for seeking special status, i.e., the claimed invention either: A) materially enhances the quality of the environment or B) materially contributes to: i) the discovery or development of renewable energy resources, ii) the more efficient utilization and conservation of energy resources, or iii) greenhouse gas emission reduction. 4) If the disclosure is not clear on its face that the claimed invention materially contributes under category (A) or (B), the petition must be accompanied by a statement by the applicant, assignee, or an attorney/agent registered to practice before the Office explaining how the materiality standard is met. 5) A statement that applicant will agree to make an election without traverse in a telephonic interview if a restriction requirement is made by the examiner. 6) The petition to make special must be filed electronically. 7) The petition must be filed at least one day prior to the date that a first Office Action appears in the Patent Application Information Retrieval (PAIR) system. 8) The petition must be accompanied by a request for early publication in compliance with 37 CFR 1.219 and include the publication fee as set forth in 37 CFR 1.18(d).

The requirement for a fee for consideration of the petition to make special for applications pertaining to Green Technologies has been waived.

The instant petition complies with items 1 – 8 above. Accordingly, the above-identified application has been accorded "special" status.

Telephone inquires concerning this decision should be directed to Blaine Copenheaver at 571-272-1156.

The application is being forwarded to the examiner for action on the merits commensurate with this decision.

/Blaine Copenheaver/

Blaine Copenheaver
Quality Assurance Specialist
Technology Center 1700

Doc Code: PET.GREEN
Document Description: Petition for Green Tech Pilot

PTO/SB/420 (11-10)
Approved for use through 01/31/2011. OMB 0651-0062
U.S. Patent and Trademark Office; U. S. DEPARTMENT OF COMMERCE
Under the Paperwork Reduction Act of 1995, no persons are required to respond to a collection of information unless it displays a valid OMB control number.

PETITION TO MAKE SPECIAL UNDER THE GREEN TECHNOLOGY PILOT PROGRAM

Attorney Docket Number: 07.003	Application Number (if known): 13163655	Filing date: 2011-06-17
First Named Inventor: Nicholas Brady Tucker		
Title: SOLAR POWER STRUCTURE		

APPLICANT HEREBY REQUESTS TO PARTICIPATE IN THE GREEN TECHNOLOGY PILOT PROGRAM FOR THE ABOVE-IDENTIFIED APPLICATION. See Instruction Sheet on page 2.

This petition must be timely filed electronically using the USPTO electronic filing system, EFS-Web.

1. By filing this petition:

   Applicant is requesting early publication: Applicant hereby requests early publication under 37 CFR 1.219 and the publication fee set forth in 37 CFR 1.18(d) accompanies this request.

2. By filing this petition: applicant is agreeing to make an election without traverse in a telephonic interview and elect an invention that meets the eligibility requirements for the Green Technology Pilot Program, if the Office determines that the claims are not obviously directed to a single invention. See Instruction Sheet.

3. This request is accompanied by statements of special status for the eligibility requirement.

4. The application contains no more than three (3) independent claims and twenty (20) total claims.

5. The application does not contain any multiple dependent claims.

6. Other attachments: Statement in Support of Petition to Make Special

Signature /Alan M. Flum, #64843/	Date 2011-06-17
Name (Print/Typed) Alan M. Flum	Registration Number 64843

Note: *Signatures of all the inventors or assignees of record of the entire interest or their representative(s) are required in accordance with 37 CFR 1.33 and 11.18. Please see 37 CFR 1.4(d) for the form of the signature. If necessary, submit multiple forms for more than one signature see below*.*

☒ *Total of 1 forms are submitted.

The information is required to obtain or retain a benefit by the public which is to file (and by the USPTO to process) an application. Confidentiality is governed by 35 U.S.C. 122 and 37 CFR 1.11 and 1.14. This collection is estimated to take 12 hours to complete, including gathering, preparing, and submitting the completed application form to the USPTO. Time will vary depending upon the individual case. Any comments on the amount of time you require to complete this form and/or suggestions for reducing this burden, should be sent to the Chief Information Officer, U.S. Patent and Trademark Office, U.S. Department of Commerce, P.O. Box 1450, Alexandria, VA 22313-1450. DO NOT SEND FEES OR COMPLETED FORMS TO THIS ADDRESS. **SEND TO: Commissioner for Patents, P.O. Box 1450, Alexandria, VA 22313-1450.**

If you need assistance in completing the form, call 1-800-PTO-9199 and select option 2.

Under the Paperwork Reduction Act of 1995, no persons are required to respond to a collection of information unless it displays a valid OMB control number.

Instruction Sheet for Petition to Make Special Under the Green Technology Pilot Program

(Not to be Submitted to the USPTO)

The following is a summary of the requirements (for more information see the notices (i) "Pilot Program for Green Technologies Including Greenhouse Gas Reduction," (ii) "Elimination of Classification Requirement in the Green Technology Pilot Program," and (iii) "Expansion and Extension of the Green Technology Pilot Program," available on the USPTO web site at http://www.uspto.gov/patents/init_events/green_tech.jsp):

1) The application must be a non-reissue, non-provisional utility application filed under 35 U.S.C. 111 (a), or an international application that has entered the national stage in compliance with 35 U.S.C. 371, irrespective of the filing date of the application. Reexamination proceedings are excluded from this pilot program.

2) The application must contain three or fewer independent claims and twenty or fewer total claims. The application must not contain any multiple dependent claims. For an application that contains more than three independent claims or twenty total claims, or multiple dependent claims, applicant must file a preliminary amendment in compliance with 37 CFR 1.121 to cancel the excess claims and/or the multiple dependent claims at the time the petition to make special is filed.

3) The claims must be directed to a single invention that materially enhances the quality of the environment, or that materially contributes to: (1) the discovery or development of renewable energy resources; (2) the more efficient utilization and conservation of energy resources; or (3) green house gas emission reduction (see the eligibility requirements of sections II and III of the notice (i) cited above). The petition must include a statement that, if the USPTO determines that the claims are directed to multiple inventions (e.g., in a restriction requirement), applicant will agree to make an election without traverse in a telephonic interview, and elect an invention that meets the eligibility requirements in section II or III of the notice (i) cited above.

4) The petition to make special must be timely filed electronically using the USPTO electronic filing system, EFS-Web, and selecting the document description of "Petition for Green Tech Pilot" on the EFS-Web screen. Applicant should use form PTO/SB/420, which is available as a Portable Document Format (PDF) fillable form in EFS-Web and on the USPTO Web site.

5) The petition to make special must be filed at least one day prior to the date that a first Office action (which may be an Office action containing only a restriction requirement) appears in the Patent Application Information Retrieval (PAIR) system. Applicant may check the status of the application using PAIR.

6) The petition to make special must be accompanied by a request for early publication in compliance with 37 CFR 1.219 and the publication fee set forth in 37 CFR 1.18(d).

Privacy Act Statement

The **Privacy Act of 1974 (P.L. 93-579)** requires that you be given certain information in connection with your submission of the attached form related to a patent application or patent. Accordingly, pursuant to the requirements of the Act, please be advised that: (1) the general authority for the collection of this information is 35 U.S.C. 2(b)(2); (2) furnishing of the information solicited is voluntary; and (3) the principal purpose for which the information is used by the U.S. Patent and Trademark Office is to process and/or examine your submission related to a patent application or patent. If you do not furnish the requested information, the U.S. Patent and Trademark Office may not be able to process and/or examine your submission, which may result in termination of proceedings or abandonment of the application or expiration of the patent.

The information provided by you in this form will be subject to the following routine uses:

1. The information on this form will be treated confidentially to the extent allowed under the Freedom of Information Act (5 U.S.C. 552) and the Privacy Act (5 U.S.C 552a). Records from this system of records may be disclosed to the Department of Justice to determine whether disclosure of these records is required by the Freedom of Information Act.
2. A record from this system of records may be disclosed, as a routine use, in the course of presenting evidence to a court, magistrate, or administrative tribunal, including disclosures to opposing counsel in the course of settlement negotiations.
3. A record in this system of records may be disclosed, as a routine use, to a Member of Congress submitting a request involving an individual, to whom the record pertains, when the individual has requested assistance from the Member with respect to the subject matter of the record.
4. A record in this system of records may be disclosed, as a routine use, to a contractor of the Agency having need for the information in order to perform a contract. Recipients of information shall be required to comply with the requirements of the Privacy Act of 1974, as amended, pursuant to 5 U.S.C. 552a(m).
5. A record related to an International Application filed under the Patent Cooperation Treaty in this system of records may be disclosed, as a routine use, to the International Bureau of the World Intellectual Property Organization, pursuant to the Patent Cooperation Treaty.
6. A record in this system of records may be disclosed, as a routine use, to another federal agency for purposes of National Security review (35 U.S.C. 181) and for review pursuant to the Atomic Energy Act (42 U.S.C. 218(c)).
7. A record from this system of records may be disclosed, as a routine use, to the Administrator, General Services, or his/her designee, during an inspection of records conducted by GSA as part of that agency's responsibility to recommend improvements in records management practices and programs, under authority of 44 U.S.C. 2904 and 2906. Such disclosure shall be made in accordance with the GSA regulations governing inspection of records for this purpose, and any other relevant (*i.e.*, GSA or Commerce) directive. Such disclosure shall not be used to make determinations about individuals.
8. A record from this system of records may be disclosed, as a routine use, to the public after either publication of the application pursuant to 35 U.S.C. 122(b) or issuance of a patent pursuant to 35 U.S.C. 151. Further, a record may be disclosed, subject to the limitations of 37 CFR 1.14, as a routine use, to the public if the record was filed in an application which became abandoned or in which the proceedings were terminated and which application is referenced by either a published application, an application open to public inspection or an issued patent.
9. A record from this system of records may be disclosed, as a routine use, to a Federal, State, or local law enforcement agency, if the USPTO becomes aware of a violation or potential violation of law or regulation.

IN THE UNITED STATES PATENT AND TRADEMARK OFFICE

In re Application of:

Applicant: Nicholas Brady Tucker
Serial No.: 13163655
Filed: June 17, 2011

For: SOLAR POWER STRUCTURE

Art Unit: Unknown
Examiner: Unknown

Customer No.: 91,020

STATEMENT IN SUPPORT OF PETITION TO MAKE SPECIAL UNDER THE GREEN TECHNOLOGY PILOT PROGRAM

Commissioner of Patents
P.O. Box 1450
Alexandria, VA 22313-1450

Sir:

In accordance with 37 CFR § 1.102(c)(2) and Federal Register notice published on November 10, 2010 (75 Fed. Reg. 69,049-50), Applicants hereby request to participate in the Green Technology Pilot Program for the above-identified application.

Applicants enclose a Petition to Make Special under the Green Technology Pilot Program, agree to make a telephonic election in response to any restriction requirement, and enclose the requisite early publication fee of $300. The application is a non-reissue, non-provisional utility application filed under 35 U.S.C 111, and presently has 3 independent claims and 14 total claims.

The invention claimed in the above-identified application materially contributes to the more efficient utilization and conservation of energy resources and materially contributes to the reduction of green house gases. The claimed invention utilizes solar electric energy, a renewable energy source, and more specifically, the claimed invention allows solar energy to be accessible in both a wide range of residential and commercial environments by providing a standalone or a partially standalone solar PV structure that is designed to be durable and aesthetically pleasing while that the same time is potentially simple to transport and deploy.

As a result, the claimed invention provides a renewable source of energy that can be easily installed in a wide range of commercial and residential settings, thus encouraging the greater use of renewable energy in those environments. In addition, the renewable source of energy reduces dependence on traditional, non-renewable greenhouse gas producing energy resources, therefore enabling their conservation, and reducing greenhouse gas emissions by limiting their use.

Respectfully Submitted,

/Alan M. Flum/

Alan M. Flum
Registration No. 64,843

Stone Creek LLC
2019 NE 179 Street P67
Ridgefield, WA 98642
(360) 852-8490

Date: June 17, 2011

UNITED STATES PATENT AND TRADEMARK OFFICE

UNITED STATES DEPARTMENT OF COMMERCE
United States Patent and Trademark Office
Address: COMMISSIONER FOR PATENTS
P.O. Box 1450
Alexandria, Virginia 22313-1450
www.uspto.gov

APPLICATION NO.	FILING DATE	FIRST NAMED INVENTOR	ATTORNEY DOCKET NO.	CONFIRMATION NO.
13/163,655	06/17/2011	Nicholas Brady Tucker	07.003	1147

91020 7590 08/04/2011
Stone Creek LLC
Alan M Flum
2019 NE 179 Street P67
Ridgefield, WA 98642

EXAMINER

ART UNIT	PAPER NUMBER
1725	

NOTIFICATION DATE	DELIVERY MODE
08/04/2011	ELECTRONIC

Please find below and/or attached an Office communication concerning this application or proceeding.

The time period for reply, if any, is set in the attached communication.

Notice of the Office communication was sent electronically on above-indicated "Notification Date" to the following e-mail address(es):

alan@stonecreekpatents.com

UNITED STATES PATENT AND TRADEMARK OFFICE

Commissioner for Patents
United States Patent and Trademark Office
P.O. Box 1450
Alexandria, VA 22313-1450
www.uspto.gov

Stone Creek LLC
Alan M Flum
2019 NE 179 Street P67
Ridgefield WA 98642

AUG 0 4 2011

In re Application of	:	
TUCKER, NICHOLAS BRADY	:	DECISION ON PETITION
Application No. 13/163,655	:	TO MAKE SPECIAL UNDER
Filed: 06/17/2011	:	THE GREEN TECHNOLOGY
Attorney Docket No. 07.003	:	PILOT PROGRAM

This is a decision on the petition under 37 CFR 1.102, filed June 17, 2011, to make the above-identified application special under the pilot program for applications pertaining to Green Technologies as set forth in 74 Federal Register Notice 64666 (December 8, 2009) and amended by 75 Federal Register Notice 28554 (May 21, 2010) and 75 Federal Register Notice 69049 (November 10, 2010).

The petition is **GRANTED**.

A grantable petition to make an application special under 37 CFR 1.102 and the pilot program as set forth in 74 FR 64666 must be directed to a nonprovisional application filed under 35 USC 111(a) or be a national stage entry under 35 USC 371, exclusive of any reissue applications.

In order to qualify for special status, the following requirements must be met. 1) The application must have no more than 3 independent claims and no more than 20 total claims. 2) The application must not contain any multiple dependent claims. 3) The petition must state the basis for seeking special status, i.e., the claimed invention either: A) materially enhances the quality of the environment or B) materially contributes to: i) the discovery or development of renewable energy resources, ii) the more efficient utilization and conservation of energy resources, or iii) greenhouse gas emission reduction. 4) If the disclosure is not clear on its face that the claimed invention materially contributes under category (A) or (B), the petition must be accompanied by a statement by the applicant, assignee, or an attorney/agent registered to practice before the Office explaining how the materiality standard is met. 5) A statement that applicant will agree to make an election without traverse in a telephonic interview if a restriction requirement is made by the examiner. 6) The petition to make special must be filed electronically. 7) The petition must be filed at least one day prior to the date that a first Office Action appears in the Patent Application Information Retrieval (PAIR) system. 8) The petition must be accompanied by a

request for early publication in compliance with 37 CFR 1.219 and include the publication fee as set forth in 37 CFR 1.18(d).

The requirement for a fee for consideration of the petition to make special for applications pertaining to Green Technologies has been waived.

The instant petition complies with items 1 – 8 above. Accordingly, the above-identified application has been accorded "special" status.

Telephone inquires concerning this decision should be directed to Tom Dunn at 571-272-1171.

The application is being forwarded to the Technology Center Art Unit 1725 for action on the merits commensurate with this decision.

/Tom Dunn/

Tom Dunn
Quality Assurance Specialist
Technology Center 1700

UNITED STATES PATENT AND TRADEMARK OFFICE

Commissioner for Patents
United States Patent and Trademark Office
P.O. Box 1450
Alexandria, VA 22313-1450
www.uspto.gov

WAI MUN LEE
511 HAMILTON AVE
MILPITAS CA 95035

MAILED
JUL 06 2011
OFFICE OF PETITIONS

In re Application of	:	
Wai Mun Lee	:	
Application No. 13/163,682	:	DECISION ON PETITION
Filed: June 18, 2011	:	TO MAKE SPECIAL UNDER
Attorney Docket No.	:	37 CFR 1.102(c)(1)
	:	

This is a decision on the petition under 37 CFR 1.102(c)(1), filed June 21, 2011, to make the above-identified application special based on applicant's age as set forth in M.P.E.P. § 708.02, Section IV.

The petition is **GRANTED**.

A grantable petition to make an application special under 37 CFR 1.102(c)(1) and MPEP § 708.02, Section IV: Applicant's Age must be accompanied by evidence showing that at least one of the applicants is 65 years of age, or more, such as a birth certificate or a statement by applicant. No fee is required

The instant petition includes a statement inventor Wai Mun Lee, attesting to his/her age. The above-identified application has been accorded "special" status.

Telephone inquiries concerning this decision should be directed to Kimberly Inabinet at 571-272-4618.

All other inquiries concerning either the examination or status of the application should be directed to the Technology Center.

The application is being forwarded to the Technology Center Art Unit 1711 for action on the merits commensurate with this decision.

/Kimberly Inabinet/

Kimberly Inabinet
Petitions Examiner
Office of Petitions

UNITED STATES PATENT AND TRADEMARK OFFICE

Commissioner for Patents
United States Patent and Trademark Office
P.O. Box 1450
Alexandria, VA 22313-1450
www.uspto.gov

MAILED

JUL 26 2011

PCT LEGAL ADMINISTRATION

HENKEL CORPORATION
One Henkel Way
ROCKY HILL CT 06067

In re Application of: MAIER, Hans-Joerg, et al.	:	
U.S. Application No.: 13/163,786	:	DECISION ON PETITION
Filing Date: June 20, 2011	:	UNDER 37 CFR 1.137(b)
Attorney's Docket No.: H 8046/PCT/US	:	
For: REPAIR NOZZLE	:	

This decision is issued in response to the "Petition For Revival Of An International Application For Patent Abandoned Unintentionally Under 37 C.F.R. § 1.137(b)" filed June 20, 2011. Applicants have paid the required petition fee.

BACKGROUND

On July 23, 2008, applicants filed international application PCT/EP2009/059461. The application claimed a priority date of September 12, 2008, and it designated the United States. The deadline for submission of the basic national fee was thirty months from the priority date, i.e., March 12, 2011.

Payment of the U.S. basic national fee was not submitted on or prior to March 12, 2011. Accordingly, international application PCT/EP2009/059461 became abandoned with respect to the United States at midnight on March 12, 2011 (see 35 U.S.C. 371(d); 37 CFR 1.495(h)).

On June 20, 2011, applicants filed the present application under 35 U.S.C. 111(a). The specification, and the application data sheet (ADS) filed therewith, identified the present application as a continuation of PCT/EP2009/059461, and the submission included the petition for revival of international application PCT/EP2009/059461 considered herein.

DISCUSSION

The present petition was accompanied by payment of the petition fee, and the petition includes a statement that "the entire delay in filing this Petition, and Transmittal Letter to the United States/Designated/Elected Office (DO/EO/US) Concerning A Filing Under 35 U.S.C. 365, a copy of the international application as published (WO 2010/028900), a copy of the Request for international application (designating the United States) was unintentional." This statement is construed as the statement required under 37 CFR 1.137(b)(3), that is, a statement that "the entire delay in filing the required reply from the due date for the required reply until the filing of a grantable petition under 37 CFR 1.137(b) was unintentional." Based on this interpretation, the requirement of 37 CFR 1.137(b)(3) is considered satisfied.

As discussed above, the specification and ADS filed herein contain appropriate references identifying the present application as a continuation of PCT/EP2009/059461. The filing of a continuation application under 35 U.S.C. 111(a) is accepted as the "required reply" under 37 CFR 1.137(b)(1) (see MPEP section 711.03(c)(II)(A)).

Based on the above, the requirements of 37 CFR 1.137(b) have been satisfied. Therefore, the request to revive the international application as to the United States is appropriately granted.

CONCLUSION

The petition for revival under 37 CFR 1.137(b) is **GRANTED**.

International application PCT/EP2009/059461 is revived for purposes of continuity only, and since continuity has been established by this decision reviving the international application, the international application is again abandoned in favor of the present continuing application number 13/163,786.

The application is being referred to the Office of Patent Application Processing for further processing in accordance with this decision.

/RichardMRoss/

Richard M. Ross
Attorney Advisor
Office of PCT Legal Administration
Telephone: (571) 272-3296

UNITED STATES PATENT AND TRADEMARK OFFICE

Commissioner for Patents
United States Patent and Trademark Office
P.O. Box 1450
Alexandria, VA 22313-1450
www.uspto.gov

Decision Date : April 18, 2012

In re Application of :

Shigeru Aida

DECISION ON PETITION

UNDER CFR 1.313(c)(2)

Application No : 13163800

Filed : 20-Jun-2011

Attorney Docket No : 380440US99CONT

This is an electronic decision on the petition under 37 CFR 1.313(c)(2), filed April 18, 2012 , to withdraw the above-identified application from issue after payment of the issue fee.

The petition is **GRANTED.**

The above-identified application is withdrawn from issue for consideration of a submission under 37 CFR 1.114 (request for continued examination). See 37 CFR 1.313(c)(2).

Petitioner is advised that the issue fee paid in this application cannot be refunded. If, however, this application is again allowed, petitioner may request that it be applied towards the issue fee required by the new Notice of Allowance.

Telephone inquiries concerning this decision should be directed to the Patent Electronic Business Center (EBC) at 866-217-9197.

This application file is being referred to Technology Center AU 3725 for processing of the request for continuing examination under 37 CFR 1.114 .

Office of Petitions

Doc Code: PET.AUTO Document Description: Petition automatically granted by EFS-Web	PTO/SB/140 U.S. Patent and Trademark Office Department of Commerce

Electronic Petition Request	**PETITION TO WITHDRAW AN APPLICATION FROM ISSUE AFTER PAYMENT OF THE ISSUE FEE UNDER 37 CFR 1.313(c)**
Application Number	13163800
Filing Date	20-Jun-2011
First Named Inventor	Shigeru Aida
Art Unit	3725
Examiner Name	MARK ROSENBAUM
Attorney Docket Number	380440US99CONT
Title	METHOD FOR GRANULATING ETHYLENE/TETRAFLUOROETHYLENE COPOLYMER

An application may be withdrawn from issue for further action upon petition by the applicant. To request that the Office withdraw an application from issue, applicant must file a petition under this section including the fee set forth in § 1.17(h) and a showing of good and sufficient reasons why withdrawal of the application from issue is necessary.

APPLICANT HEREBY PETITIONS TO WITHDRAW THIS APPLICATION FROM ISSUE UNDER 37 CFR 1.313(c).

A grantable petition requires the following items:
(1) Petition fee; and
(2) One of the following reasons:
(a) Unpatentability of one or more claims, which must be accompanied by an unequivocal statement that one or more claims are unpatentable, an amendment to such claim or claims, and an explanation as to how the amendment causes such claim or claims to be patentable;
(b) Consideration of a request for continued examination in compliance with § 1.114 (for a utility or plant application only); or
(c) Express abandonment of the application. Such express abandonment may be in favor of a continuing application, but not a CPA under 37 CFR 1.53(d).

Petition Fee

☐ Applicant claims SMALL ENTITY status. See 37 CFR 1.27.

☐ Applicant is no longer claiming SMALL ENTITY status. See 37 CFR 1.27(g)(2).

☐ Applicant(s) status remains as SMALL ENTITY.

☒ Applicant(s) status remains as other than SMALL ENTITY

Reason for withdrawal from issue

○ One or more claims are unpatentable ◉ Consideration of a request for continued examination (RCE) (List of Required Documents and Fees) ○ Applicant hereby expressly abandons the instant application (any attorney/agent signing for this reason must have power of attorney pursuant to 37 CFR 1.32(b)).	
RCE request,submission, and fee. ☐ I certify, in accordance with 37 CFR 1.4(d)(4) that : The RCE request ,submission, and fee have already been filed in the above-identified application on ☒ Are attached.	
THIS PORTION MUST BE COMPLETED BY THE SIGNATORY OR SIGNATORIES I certify, in accordance with 37 CFR 1.4(d)(4) that I am: ◉ An attorney or agent registered to practice before the Patent and Trademark Office who has been given power of attorney in this application. ○ An attorney or agent registered to practice before the Patent and Trademark Office, acting in a representative capacity. ○ A sole inventor ○ A joint inventor; I certify that I am authorized to sign this submission on behalf of all of the inventors ○ A joint inventor; all of whom are signing this e-petition ○ The assignee of record of the entire interest that has properly made itself of record pursuant to 37 CFR 3.71	
Signature	/Derek A. Lightner/
Name	Derek A. Lightner
Registration Number	57298

Doc code : PET.OP.AGE
Description : Petition to make special based on Age/Health

PTO/SB/130 (07-09)
Approved for use through 07/31/2012. OMB 0651- 0031
U.S. Patent and Trademark Office; U.S. DEPARTMENT OF COMMERCE
Under the Paperwork Reduction Act of 1995, no persons are required to respond to a collection of information unless it contains a valid OMB control number

PETITION TO MAKE SPECIAL BASED ON AGE FOR ADVANCEMENT OF EXAMINATION UNDER 37 CFR 1.102(c)(1)

Application Information

Application Number	13/163,829	Confirmation Number	1598	Filing Date	2011-06-20
Attorney Docket Number (optional)	1792-16(b)	Art Unit		Examiner	
First Named Inventor	Peter Gold				
Title of Invention	FASTENER ASSEMBLY				

Attention: Office of Petitions
An application may be made special for advancement of examination upon filing of a petition showing that the applicant is 65 years of age, or more. No fee is required with such a petition. See 37 CFR 1.102(c)(1) and MPEP 708.02 (IV).

APPLICANT HEREBY PETITIONS TO MAKE SPECIAL FOR ADVANCEMENT OF EXAMINATION IN THIS APPLICATION UNDER 37 CFR 1.102(c)(1) and MPEP 708.02 (IV) ON THE BASIS OF THE APPLICANT'S AGE.

A grantable petition requires one of the following items:
(1) Statement by one named inventor in the application that he/she is 65 years of age, or more; or
(2) Certification by a registered attorney/agent having evidence such as a birth certificate, passport, driver's license, etc. showing one named inventor in the application is 65 years of age, or more.

Name of Inventor who is 65 years of age, or older

Given Name	Middle Name	Family Name	Suffix
Peter		Gold	

A signature of the applicant or representative is required in accordance with 37 CFR 1.33 and 10.18.
Please see 37 CFR 1.4(d) for the format of the signature.

Select (1) or (2) :

○ (1) I am an inventor in this application and I am 65 years of age, or more.

● (2) I am an attorney or agent registered to practice before the Patent and Trademark Office, and I certify that I am in possession of evidence, and will retain such in the application file record, showing that the inventor listed above is 65 years of age, or more.

Signature	/Jessica G. Bower/	Date (YYYY-MM-DD)	2011-06-20
Name	Jessica G. Bower	Registration Number	64438

PTO/SB/130 (07-09)
Approved for use through 07/31/2012. OMB 0651- 0031
U.S. Patent and Trademark Office; U.S. DEPARTMENT OF COMMERCE
Under the Paperwork Reduction Act of 1995, no persons are required to respond to a collection of information unless it contains a valid OMB control number

Privacy Act Statement

The Privacy Act of 1974 (P.L. 93-579) requires that you be given certain information in connection with your submission of the attached form related to a patent application or patent. Accordingly, pursuant to the requirements of the Act, please be advised that: (1) the general authority for the collection of this information is 35 U.S.C. 2(b)(2); (2) furnishing of the information solicited is voluntary; and (3) the principal purpose for which the information is used by the U.S. Patent and Trademark Office is to process and/or examine your submission related to a patent application or patent. If you do not furnish the requested information, the U.S. Patent and Trademark Office may not be able to process and/or examine your submission, which may result in termination of proceedings or abandonment of the application or expiration of the patent.

The information provided by you in this form will be subject to the following routine uses:

1. The information on this form will be treated confidentially to the extent allowed under the Freedom of Information Act (5 U.S.C. 552) and the Privacy Act (5 U.S.C. 552a). Records from this system of records may be disclosed to the Department of Justice to determine whether the Fr eedom of Information Act requires disclosure of these records.

2. A record from this system of records may be disclosed, as a routine use, in the course of presenting evidence to a court, magistrate, or administrative tribunal, including disclosures to opposing counsel in the course of settlement negotiations.

3. A record in this system of records may be disclosed, as a routine use, to a Member of Congress submitting a request involving an individual, to whom the record pertains, when the individual has requested assistance from the Member with respect to the subject matter of the record.

4. A record in this system of records may be disclosed, as a routine use, to a contractor of the Agency having need for the information in order to perform a contract. Recipients of information shall be required to comply with the requirements of the Privacy Act of 1974, as amended, pursuant to 5 U.S.C. 552a(m).

5. A record related to an International Application filed under the Patent Cooperation Treaty in this system of records may be disclosed, as a routine use, to the International Bureau of the World Intellectual Property Organization, pursuant to the Patent Cooperation Treaty.

6. A record in this system of records may be disclosed, as a routine use, to another federal agency for purposes of National Security review (35 U.S.C. 181) and for review pursuant to the Atomic Energy Act (42 U.S.C. 218(c)).

7. A record from this system of records may be disclosed, as a routine use, to the Administrator, General Services, or his/her designee, during an inspection of records conducted by GSA as part of that agency's responsibility to recommend improvements in records management practices and programs, under authority of 44 U.S.C. 2904 and 2906. Such disclosure shall be made in accordance with the GSA regulations governing inspection of records for this purpose, and any other relevant (i.e., GSA or Commerce) directive. Such disclosure shall not be used to make determinations about indivi duals.

8. A record from this system of records may be disclosed, as a routine use, to the public after either publication of the application pursuant to 35 U.S.C. 122(b) or issuance of a patent pursuant to 35 U.S.C. 151. Further, a record may be disclosed, subject to the limitations of 37 CFR 1.14, as a routine use, to the public if the record was filed in an application which became abandoned or in which the proceedings were terminated and which application is referenced by either a published application, an application open to public inspections or an issued patent.

9. A record from this system of records may be disclosed, as a routine use, to a Federal, State, or local law enforcement agency, if the USPTO becomes aware of a violation or potential violation of law or regulation.

UNITED STATES PATENT AND TRADEMARK OFFICE

Commissioner for Patents
United States Patent and Trademark Office
P.O. Box 1450
Alexandria, VA 22313-1450
www.uspto.gov

In re Application of
Peter Gold

Application No. 13163829

Filed:

Attorney Docket No. 1792-16(b)

:DECISION ON PETITION TO MAKE SPECIAL
:UNDER 37 CFR 1.102(c)(1)

This is a decision on the electronic petition under 37 CFR 1.102 (c)(1), filed 20-JUN-2011 to make the above-identified application special based on applicant's age as set forth in MPEP § 708.02, Section IV.

The petition is **GRANTED**.

A grantable petition to make an application special under 37 CFR 1.102(c)(1), MPEP § 708.02, Section IV: Applicant's Age must include a statement by applicant or a registered practitioner having evidence that applicant is at least 65 years of age. No fee is required.

Accordingly, the above-identified application has been accorded "special" status and will be taken up for action by the examiner upon the completion of all pre-examination processing.

Telephone inquiries concerning this electronic decision should be directed to the Electronic Business Center at 866-217-9197.

All other inquiries concerning either the examination or status of the application should be directed to the Technology Center.

UNITED STATES PATENT AND TRADEMARK OFFICE

Commissioner for Patents
United States Patent and Trademark Office
P.O. Box 1450
Alexandria, VA 22313-1450
www.uspto.gov
DIW Jan-12

PATENT, COPYRIGHT & TRADEMARK LAW GROUP
4199 KINROSS LAKES PARKWAY
SUITE 275
RICHFIELD OH 44286

MAILED
JAN 05 2012
OFFICE OF PETITIONS

In re Application of Yori and Lioi Application Number: 13/163,956 Filing Date: 06/20/2011 Attorney Docket Number: YO-2440PCT	: : : : : :	DECISION REFUSING STATUS UNDER 37 CFR 1.47(a)

This is a decision on the petition filed on October 18, 2011, which is treated as a petition under 37 CFR 1.47(a).[1]

The petition is **DISMISSED**.

Rule 47 applicant is given TWO MONTHS from the mailing date of this decision to reply, correcting the below-noted deficiencies. Any reply should be entitled "Request for Reconsideration of Petition Under 37 CFR 1.47(a)," and should only address the deficiencies noted below, except that the reply may include an oath or declaration executed by the non-signing inventor. **FAILURE TO RESPOND WILL RESULT IN ABANDONMENT OF THE APPLICATION.** Extensions of time may be obtained in accordance with 37 CFR 1.136(a).

The above-identified application was filed on June 20, 2011, without an executed oath or declaration. Accordingly, on July 25, 2011, the Office of Patent Application Processing mailed a Notice to File Missing Parts of Nonprovisional Application, requiring, *inter alia*, an executed oath or declaration and a surcharge for its late filing.

[1] A petition under 37 CFR 1.47(b) is inappropriate in this instance since one of the inventors has signed the declaration. A petition under 37 CFR 1.47(b) is only appropriate where none of the inventors will sign. Accordingly, the petition will be treated as a petition under 37 CFR 1.47(a).

In response, on October 18, 2011, petitioners filed a declaration naming Richard B. Yori, III, and Paul Lioi as joint inventors, signed by joint inventor Yori on behalf of himself and non-signing inventor Lioi. A one (1) month extension of time was filed, along with the petition fee and late-filing surcharge.

Petitioners assert that the non-signing inventor has failed to sign the declaration after having been contacted at his last known address.

A grantable petition under 37 CFR 1.47(a) requires:

(1) proof that the non-signing inventor cannot be reached or located, notwithstanding diligent effort, or refuses to sign the oath or declaration after having been presented with the application papers (specification, claims and drawings);

(2) an acceptable oath or declaration in compliance with 35 U.S.C. §§ 115 and 116;

(3) the petition fee;

(4) a surcharge of $130 or $65 (small entity) if the petition and/or declaration is not filed at the time of filing the application, and

(5) a statement of the last known address of the non-signing inventor.

The petition lacks items (1) and (2).

With regard to item (1), petitioners have not shown that a copy of the application as filed (specification, including claims, drawings, if any, and the declaration) was sent to the non-signing inventor.[2]

Petitioners should send or give a copy of the application as filed (specification, including claims, drawings, if any, and the declaration) to each non-signing inventor at his or her last known address. Proof that a copy of the application (specification including claims, drawings, if any, and the declaration) was sent or given to the non-singing inventor for review may be shown by providing a copy of the cover letter transmitting the application papers to the non-signing inventor or details given in an affidavit or declaration of facts by a person having first-hand knowledge of the details.

If there is a written refusal, petitioners should provide a copy of the written refusal with any renewed petition. If the refusal

---

[2] MPEP 409.03(d).

was made orally to a person, then that person must provide details of the refusal in an affidavit or declaration of facts.

If the application is returned as undeliverable, petitioners should provide a copy of an envelope showing that a letter sent to the last known address of the non-signing inventor was returned as undeliverable by the post office. Details of the efforts made to locate the non-signing inventor should be set forth in an affidavit or declaration of facts by a person having first-hand knowledge of the details.

If the inventor cannot be reached at his or her last known address, petitioners must provide details, in an affidavit or declaration of facts by a person with first hand knowledge of the details, of the efforts, such as Internet, e-mail, or telephone directory searches, which have been undertaken to locate that inventor, send or give a copy of the application papers to him or her, and request that he or she sign and return the declaration.

If repeated attempts to contact the non-signing inventors are unsuccessful, petitioners will have shown that despite diligent efforts, the inventor(s) could not be reached.

With regard to item (2), the residence city and state or city and foreign country and mailing address for the non-signing inventor is missing from the declaration.

Pursuant to MPEP 605.02, the non-signing inventor's place of residence, that is, the city and either state or foreign country, is required to be included in the oath or declaration in a nonprovisional application for compliance with 37 CFR 1.63 unless it is included in an application data sheet (37 CFR 1.76).

Pursuant to MPEP 605.03, each applicant's mailing or post office address is required to be supplied on the oath or declaration, if not stated in an application data sheet. Applicant's mailing address means that address at which he or she customarily receives his or her mail. Either applicant's home or business address is acceptable as the mailing address. The mailing address should include the ZIP Code designation. The object of requiring each applicant's mailing address is to enable the Office to communicate directly with the applicant if desired; hence, the address of the attorney with instruction to send communications to applicant in care of the attorney is not sufficient. In situations where an inventor does not execute the oath or declaration and the inventor is not deceased, such as in an application filed under 37 CFR 1.47, the inventor's most

recent home address must be given to enable the Office to communicate directly with the inventor as necessary.

As such, the residence and mailing address must be supplied via a new oath or declaration, signed by the signing inventor on behalf of himself and the non-signing inventor, or by way of a properly-signed supplemental application data sheet pursuant to 37 CFR 1.76.

If petitioner wishes to file a new declaration, the attached form should be used.

The petition fee will be charged to counsel's deposit account as authorized in the subject petition.

Further correspondence with respect to this matter should be addressed as follows:

By mail: Mail Stop Petition
Commissioner for Patents
P.O. Box 1450
Alexandria, VA 22313-1450

By FAX: (571) 273-8300
Attn: Office of Petitions

By hand: Customer Service Window
Mail Stop Petition
Randolph Building
401 Dulany Street
Alexandria, VA 22314

Telephone inquiries related to this decision should be directed to the undersigned at 571-272-3231.

Douglas I. Wood
Senior Petitions Attorney
Office of Petitions

Encl: PTO/SB/01

UNITED STATES PATENT AND TRADEMARK OFFICE

Commissioner for Patents
United States Patent and Trademark Office
P.O. Box 1450
Alexandria, VA 22313-1450
www.uspto.gov
DIW Mar-12

PATENT, COPYRIGHT & TRADEMARK LAW GROUP
4199 Kinross Lakes Parkway
Suite 275
RICHFIELD OH 44286

MAILED
APR 03 2012
OFFICE OF PETITIONS

In re Application of	:	
Yori and Lioi	:	DECISION REFUSING STATUS
Application No. 13/163,956	:	UNDER 37 CFR 1.47(a)
Filed: 06/20/2011	:	
Attorney Docket No.	:	
YO-2440PCT	:	

This is in response to the renewed petition filed under 37 CFR 1.47(a) on March 5, 2012.

The petition is again **DISMISSED**.

Rule 47 applicant is given TWO MONTHS from the mailing date of this decision to reply, correcting the below-noted deficiencies. Any reply should be entitled "Request for Reconsideration of Petition Under 37 CFR 1.47(a)," and should only address the deficiencies noted below, except that the reply may include an oath or declaration executed by the non-signing inventor. **FAILURE TO RESPOND WILL RESULT IN ABANDONMENT OF THE APPLICATION.** Extensions of time may be obtained in accordance with 37 CFR 1.136(a).

The above-identified nonprovisional application was filed on June 20, 2011, without an executed oath or declaration. Accordingly, on July 25, 2011, the Office of Patent Application Processing mailed a Notice to File Missing Parts of Nonprovisional Application, requiring an executed oath or declaration, replacement drawings, and a surcharge for the late filing of the oath or declaration. A two (2)-month period for reply was set.

In response, on October 18, 2011, the initial petition was filed, accompanied by a declaration naming Richard B. Yori, III, and Paul Lioi as joint inventors, signed by joint inventor Yori on behalf of himself and non-signing joint inventor Lioi. A one (1) month extension of time was also filed.

On January 5, 2012, the petition was dismissed because petitioners had not provided sufficient proof of diligent efforts

to locate the non-signing inventor and because the oath or declaration was not in compliance with 37 CFR 1.63.

On March 5, 2012, the subject renewed petition was filed.

Petitioners again assert that the non-signing inventor cannot be located. In support, a copy of the application sent to the non-signing inventor's last known address but returned as undeliverable has been provided. A new oath or declaration has also been filed.

A grantable petition under 37 CFR 1.47(a) requires:

(1) proof that the non-signing inventor cannot be reached or located, notwithstanding diligent effort, or refuses to sign the oath or declaration after having been presented with the application papers (specification, claims and drawings);

(2) an acceptable oath or declaration in compliance with 35 U.S.C. §§ 115 and 116;

(3) the petition fee;

(4) a surcharge of $130 or $65 (small entity) if the petition and/or declaration is not filed at the time of filing the application, and

(5) a statement of the last known address of the non-signing inventor.

The petition lacks item (2).

Specifically, petitioners have not provided that the non-signing inventor cannot be reached or located, notwithstanding diligent effort, or refuses to sign the oath or declaration after having been presented with the application papers (specification, claims and drawings). In this regard, a brief Internet search indicates that joint inventor Lioi may now reside at a different address in North Canton, OH 44720-6213.

Further, in this regard, it is noted that the application papers were sent to a Post Office Box. The Internet search referenced above, however, indicates that the non-signing inventor is receiving mail at a different Post Office Box than the PO Box to which the application papers were sent, and may no longer be able to receive mail at the PO Box to which the application papers were sent.

As such, the showing of record is insufficient to conclude that a diligent effort has been made to locate the non-signing inventor. Petitioners must verify the last known address of the non-singing

inventor. As stated in MPEP 409.03(d), copies of documentary evidence such as internet searches, certified mail return receipts, cover letters of instructions, telegrams, that support a finding that the nonsigning inventor could not be found or reached should be made part of the statement. The steps taken to locate the whereabouts of the nonsigning inventor should be included in the statement of facts. It is important that the statement contain facts as opposed to conclusions.

If the application is returned as undeliverable, petitioners should provide a copy of an envelope showing that a letter sent to the last known address of the non-signing inventor was returned as undeliverable by the post office. Details of the efforts made to locate the non-signing inventor should be set forth in an affidavit or declaration of facts by a person having first-hand knowledge of the details.

If a new address is located, a copy of the application papers should be sent to the non-signing inventor at that address. If repeated efforts to locate the non-signing inventor are unsuccessful, petitioners will have shown that despite diligent efforts, the non-signing inventor cannot be reached.

Furthermore, if the last known address for the non-signing inventor has changed, applicants should file either an Application Data Sheet in compliance with 37 CFR 1.76, listing the new mailing address and residence for the non-signing inventor or a new oath or declaration signed by the signing inventor on behalf of himself and the non-signing inventor.

Further correspondence with respect to this matter should be addressed as follows:

By mail: Mail Stop Petition
Commissioner for Patents
P.O. Box 1450
Alexandria, VA 22313-1450

By FAX: (571) 273-8300
Attn: Office of Petitions

By hand: Customer Service Window
Mail Stop Petition
Randolph Building
401 Dulany Street
Alexandria, VA 22314

A reply may also be filed via the EFS-Web filing system of the USPTO.

Telephone inquiries related to this decision should be directed to the undersigned at 571-272-3231.

Douglas I. Wood
Senior Petitions Attorney
Office of Petitions

PTO/SB/20PCT-JP (05-10)
Approved for use through 01/31/2012. OMB 0651-0058
U.S. Patent and Trademark Office; U. S. DEPARTMENT OF COMMERCE
Under the Paperwork Reduction Act of 1995, no persons are required to respond to a collection of information unless it displays a valid OMB control number.

REQUEST FOR PARTICIPATION IN THE PATENT COOPERATION TREATY - PATENT PROSECUTION HIGHWAY (PCT-PPH) PILOT PROGRAM BETWEEN THE JAPAN PATENT OFFICE (JPO) AND THE USPTO

Application No:	13/163,982	Filing date:	June 20, 2011
First Named Inventor:	Kouki HISHIMOTO		
Title of the Invention:	Video Signal Processing Apparatus and Video Signal Processing Method		

THIS REQUEST FOR PARTICIPATION IN THE PCT-PPH PILOT PROGRAM ALONG WITH THE REQUIRED DOCUMENTS MUST BE SUBMITTED VIA EFS-WEB. INFORMATION REGARDING EFS-WEB IS AVAILABLE AT HTTP://WWW.USPTO.GOV/EBC/EFS_HELP.HTML

APPLICANT HEREBY REQUESTS PARTICIPATION IN THE PCT-PPH PROGRAM AND PETITIONS TO MAKE THE ABOVE-IDENTIFIED APPLICATION SPECIAL UNDER THE PCT-PPH PROGRAM.

The above-identified application is (1) a national stage entry of the corresponding PCT application, or (2) a national stage entry of another PCT application which claims priority to the corresponding PCT application, or (3) a national application that claims domestic/ foreign priority to the corresponding PCT application, or (4) a national application which forms the basis for the priority claim in the corresponding PCT application, or (5) a continuing application of a U.S. application that satisfies one of (1) to (4) above, or (6) a U.S. application that claims domestic benefit to a U.S. provisional application which forms the basis for the priority claim in the corresponding PCT application.

The corresponding PCT application number(s) is/are: PCT/JP2010/005048

The international date of the corresponding PCT application(s) is/are: August 12, 2010

I. List of Required Documents:

a. **A copy of the latest international work product (WO/ISA, WO/IPEA, or IPER) in the above–identified corresponding PCT application(s)**

☑ Is attached.

☐ Is not attached because the document is already in the U.S. application.

b. **A copy of all claims which were indicated as having novelty, inventive step and industrial applicability in the above-identified corresponding PCT application(s).**

☑ Is attached.

☐ Is not attached because the document is already in the U.S. application.

c. **English translations of the documents in a. and b. above are attached (if the documents are not in the English language). A statement that the English translation is accurate is attached for the document in b. above.**

This collection of information is required by 35 U.S.C. 119, 37 CFR 1.55, and 37 CFR 1.102(d). The information is required to obtain or retain a benefit by the public, which is to file (and by the USPTO to process) an application. Confidentiality is governed by 35 U.S.C. 122 and 37 CFR 1.11 and 1.14. This collection is estimated to take 2 hours to complete, including gathering, preparing, and submitting the completed application form to the USPTO. Time will vary depending upon the individual case. Any comments on the amount of time you require to complete this form and/or suggestions for reducing this burden should be sent to the Chief Information Officer, U.S. Patent and Trademark Office, U.S. Department of Commerce, P.O. Box 1450, Alexandria, VA 22313-1450. DO NOT SEND FEES OR COMPLETED FORMS TO THIS ADDRESS.

Approved for use through 01/31/2012. OMB 0651-0058
U.S.Patent and Trademark Office; U.S. DEPARTMENT OF COMMERCE

Under the Paperwork Reduction Act of 1995, no persons are required to respond to a collection of information unless it displays a valid OMB control number.

REQUEST FOR PARTICIPATION IN THE PCT-PPH PILOT PROGRAM BETWEEN THE JPO AND THE USPTO

(continued)

Application No.:	13/163,982
First Named Inventor:	Kouki HISHIMOTO

d. **(1) An information disclosure statement listing the documents cited in the international work products (ISR, WO/ISA, WO/IPEA, IPER) of the corresponding PCT application.**

☑ Is attached

☐ Has already been filed in the above-identified U.S. application on _____

(2) Copies of all documents (except) for U.S. patents or U.S. patent application publications)

☑ Are attached.

☐ Have already been filed in the above-identified U.S. application on _____

II. Claims Correspondence Table:

Claims in US Application	Patentable Claims in the corresponding PCT Application	Explanation regarding the correspondence
1-10	1-10	Claims 1-10 in the U.S. Application correspond to claims 1-10,
		respectively, in the corresponding PCT application.
		Each claim has been amended to improve clarity, grammar and
		syntax, to utilize proper claim format, as well as to eliminate language
		informalities.
		Additionally, claims 1-10 have been amended to eliminate potential means-
		plus-function claim language, antecedent basis issues, and ambiguities.
		Furthermore, claims 10 has been amended to recite that the program
		is included in a non-transitory computer readable medium in order to
		comply with the U.S. Patent and Trademark Office's current position
		regarding statutory subject matter.

III. All the claims in the US application sufficiently correspond to the patentable claims in the corresponding PCT application.

Signature		Date	9-2-11
Name (Print/Typed)	William Pieprz Reg. No. 33,630	Registration Number	

Privacy Act Statement

The **Privacy Act of 1974 (P.L. 93-579)** requires that you be given certain information in connection with your submission of the attached form related to a patent application or patent. Accordingly, pursuant to the requirements of the Act, please be advised that: (1) the general authority for the collection of this information is 35 U.S.C. 2(b)(2); (2) furnishing of the information solicited is voluntary; and (3) the principal purpose for which the information is used by the U.S. Patent and Trademark Office is to process and/or examine your submission related to a patent application or patent. If you do not furnish the requested information, the U.S. Patent and Trademark Office may not be able to process and/or examine your submission, which may result in termination of proceedings or abandonment of the application or expiration of the patent.

The information provided by you in this form will be subject to the following routine uses:

1. The information on this form will be treated confidentially to the extent allowed under the Freedom of Information Act (5 U.S.C. 552) and the Privacy Act (5 U.S.C 552a). Records from this system of records may be disclosed to the Department of Justice to determine whether disclosure of these records is required by the Freedom of Information Act.
2. A record from this system of records may be disclosed, as a routine use, in the course of presenting evidence to a court, magistrate, or administrative tribunal, including disclosures to opposing counsel in the course of settlement negotiations.
3. A record in this system of records may be disclosed, as a routine use, to a Member of Congress submitting a request involving an individual, to whom the record pertains, when the individual has requested assistance from the Member with respect to the subject matter of the record.
4. A record in this system of records may be disclosed, as a routine use, to a contractor of the Agency having need for the information in order to perform a contract. Recipients of information shall be required to comply with the requirements of the Privacy Act of 1974, as amended, pursuant to 5 U.S.C. 552a(m).
5. A record related to an International Application filed under the Patent Cooperation Treaty in this system of records may be disclosed, as a routine use, to the International Bureau of the World Intellectual Property Organization, pursuant to the Patent Cooperation Treaty.
6. A record in this system of records may be disclosed, as a routine use, to another federal agency for purposes of National Security review (35 U.S.C. 181) and for review pursuant to the Atomic Energy Act (42 U.S.C. 218(c)).
7. A record from this system of records may be disclosed, as a routine use, to the Administrator, General Services, or his/her designee, during an inspection of records conducted by GSA as part of that agency's responsibility to recommend improvements in records management practices and programs, under authority of 44 U.S.C. 2904 and 2906. Such disclosure shall be made in accordance with the GSA regulations governing inspection of records for this purpose, and any other relevant (*i.e.*, GSA or Commerce) directive. Such disclosure shall not be used to make determinations about individuals.
8. A record from this system of records may be disclosed, as a routine use, to the public after either publication of the application pursuant to 35 U.S.C. 122(b) or issuance of a patent pursuant to 35 U.S.C. 151. Further, a record may be disclosed, subject to the limitations of 37 CFR 1.14, as a routine use, to the public if the record was filed in an application which became abandoned or in which the proceedings were terminated and which application is referenced by either a published application, an application open to public inspection or an issued patent.
9. A record from this system of records may be disclosed, as a routine use, to a Federal, State, or local law enforcement agency, if the USPTO becomes aware of a violation or potential violation of law or regulation.

P40322.A03

IN THE UNITED STATES PATENT AND TRADEMARK OFFICE

Applicant	: Kouki HISHIMOTO	Art Unit	: 2422
Appl. No.	: 13/163,982 (Continuation of PCT/JP2010/005048)	Examiner	: Not yet assigned
I.A. Filed	: August 12, 2010	Conf. No.	: 1932
For	: VIDEO SIGNAL PROCESSING APPARATUS AND VIDEO SIGNAL PROCESSING METHOD		

COVER LETTER

Commissioner for Patents
U.S. Patent and Trademark Office
Customer Service Window, Mail Stop PPH
Randolph Building
401 Dulany Street
Alexandria VA 22314

Sir:

In support of the concurrently filed Request for Participation in the Patent Cooperation Treaty - Patent Prosecution Highway (PCT-PPH) Program between the Japan Patent Office (JPO) and the USPTO, Applicant brings the following information to the attention of the U.S. Patent and Trademark Office:

1. The present US application is a continuation of International Application No. PCT/JP2010/005048, which contains the claims indicated as having novelty, inventive step, and industrial applicability.

2. The Written Opinion of the International Searching Authority does not include any observation described in Box VIII, and thus, Applicant does not identify and explain why the claim(s) is/are not subject to an observation described in Box VIII. A copy of

the Written Opinion of the International Searching Authority and an English language translation thereof are provided herewith.

If there should be any questions concerning this application, the Examiner is invited to contact the undersigned at the telephone number listed below.

Respectfully submitted,
Kouki HISHIMOTO

Bruce H. Bernstein
Reg. No. 29027

William Pieprz
Reg. No. 33,630

September 2, 2011
GREENBLUM & BERNSTEIN, P.L.C.
1950 Roland Clarke Place
Reston, VA 20191
(703) 716-1191

IN THE UNITED STATES PATENT AND TRADEMARK OFFICE

In re Application of

Serial NO.:
Filing Date:
For: VIDEO SIGNAL PROCESSING APPARATUS AND VIDEO SIGNAL PROCESSING METHOD

VERIFICATION OF TRANSLATION

Honorable Commissioner of Patents and Trademarks
Washington, D.C. 20231

Sir:

Kazumi KAWATA c/o NII Patent Firm, 6F, Tanaka Ito Pia Shin-Osaka Bldg. 3-10, Nishi Nakajima 5-chome, Yodogawa-ku, Osaka-city, Osaka 532-0011, Japan declares:

(1) that he knows well both the Japanese and English languages;
(2) that he translated the patentable claims from PCT/JP2010/005048 from Japanese to English;
(3) that the attached English translation is an accurate translation of the patentable claims from PCT/JP2010/005048 to the best of his knowledge and belief; and
(4) that all statements made of his own knowledge are true and that all statements made on information and belief are believed to be true, and further that these statements are made with the knowledge that willful false statements and the like are punishable by fine or imprisonment, or both, under 18 U.S.C. 1001, and that such false statements may jeopardize the validity of the application or any patent thereon.

This 10th day of June, 2011

Kazumi KAWATA

請求の範囲

[請求項1]　互いにフレームレートが異なる二次元映像信号と三次元映像信号とを取得する入力部と、

前記入力部によって取得された二次元映像信号及び三次元映像信号の少なくとも一方のフレームレートを予め定められた表示フレームレートに変換し、第１期間に前記二次元映像信号を前記表示フレームレートで出力し、かつ、前記第１期間に連続する第２期間に前記三次元映像信号を前記表示フレームレートで出力する出力部とを備える

映像信号処理装置。

[請求項2]　前記入力部は、前記表示フレームレートの半分のフレームレートの前記二次元映像信号と、前記表示フレームレートの前記三次元映像信号とを取得し、

前記出力部は、前記二次元映像信号のフレームレートを前記表示フレームレートに変換する

請求項１記載の映像信号処理装置。

[請求項3]　前記二次元映像信号は、複数の二次元画像を含み、

前記映像信号処理装置は、さらに、

前記二次元画像の画素位置を水平方向にずらすためのズレ量を決定する視差決定部を備え、

前記出力部は、前記二次元画像の画素位置を前記視差決定部によって決定されたズレ量だけずらすことにより、視差補正画像を生成し、前記第１期間では、生成した視差補正画像と前記二次元画像とを１ピクチャ毎に交互に出力する

請求項２記載の映像信号処理装置。

[請求項4]　前記二次元映像信号は、複数の二次元画像を含み、

前記出力部は、前記第１期間において、前記複数の二次元画像を１ピクチャ毎に２回ずつ出力する

請求項２記載の映像信号処理装置。

[請求項5]　前記三次元映像信号は、複数の左眼用画像と複数の右眼用画像とを含み、

前記出力部は、前記第２期間では、前記複数の左眼用画像及び前記複数の右眼用画像のいずれか一方を１ピクチャ毎に２回ずつ出力する

請求項２記載の映像信号処理装置。

[請求項6]　前記入力部は、前記表示フレームレートの前記二次元映像信号と、前記表示フレームレートの２倍のフレームレートの前記三次元映像信号とを取得し、

前記出力部は、前記三次元映像信号のフレームレートを前記表示フレームレートに変換する

請求項１記載の映像信号処理装置。

[請求項7]　前記三次元映像信号は、複数の左眼用画像と複数の右眼用画像とを含み、

前記出力部は、前記第２期間では、前記複数の左眼用画像及び前記複数の右眼用画像のいずれか一方を、１ピクチャ毎に１回ずつ出力する

請求項６記載の映像信号処理装置。

[請求項8]　互いにフレームレートが異なる二次元映像信号と三次元映像信号とを取得する入力ステップと、

前記入力ステップで取得された二次元映像信号及び三次元映像信号の少なくとも一方のフレームレートを予め定められた表示フレームレートに変換し、第１期間に前記二次元映像信号を前記表示フレームレートで出力し、かつ、前記第１期間に連続する第２期間に前記三次元映像信号を前記表示フレームレートで出力する出力ステップとを含む

映像信号処理方法。

[請求項9]　互いにフレームレートが異なる二次元映像信号と三次元映像信号とを取得する入力部と、

前記入力部によって取得された二次元映像信号及び三次元映像信号

の少なくとも一方のフレームレートを予め定められた表示フレームレートに変換し、第１期間に前記二次元映像信号を前記表示フレームレートで出力し、かつ、前記第１期間に連続する第２期間に前記三次元映像信号を前記表示フレームレートで出力する出力部とを備える

集積回路。

[請求項10]　映像信号処理方法をコンピュータに実行させるためのプログラムであって、

互いにフレームレートが異なる二次元映像信号と三次元映像信号とを取得する入力ステップと、

前記入力ステップで取得された二次元映像信号及び三次元映像信号の少なくとも一方のフレームレートを予め定められた表示フレームレートに変換し、第１期間に前記二次元映像信号を前記表示フレームレートで出力し、かつ、前記第１期間に連続する第２期間に前記三次元映像信号を前記表示フレームレートで出力する出力ステップとを含む

プログラム。

[CLAIMS]

[Claim 1]

A video signal processing apparatus comprising:

an input unit configured to obtain a two-dimensional (2D) video signal and a three-dimensional (3D) video signal, the 2D video signal having a frame rate different from a frame rate of the 3D video signal; and

an output unit configured to (i) convert at least one of the frame rates of the 2D video signal and the 3D video signal obtained by said input unit into a predetermined display frame rate, (ii) output the 2D video signal at the predetermined display frame rate during a first period, and (iii) output the 3D video signal at the predetermined display frame rate during a second period that is consecutive to the first period.

[Claim 2]

The video signal processing apparatus according to Claim 1,

wherein said input unit is configured to obtain the 2D video signal having a frame rate that is half of the predetermined display frame rate and the 3D video signal having the predetermined display frame rate, and

said output unit is configured to convert the frame rate of the 2D video signal into the predetermined display frame rate.

[Claim 3]

The video signal processing apparatus according to Claim 2,

wherein the 2D video signal includes a plurality of 2D images,

said video signal processing apparatus further comprises

a parallax determining unit configured to determine a displacement amount for displacing a position of pixels of each of the 2D images in a horizontal direction, and

said output unit is configured to (i) generate a plurality of images including parallax information by displacing the position of the pixels of each of the 2D images by the displacement amount determined by said parallax determining unit, and (ii) alternately

output a picture of each of the generated images including parallax information and a picture of each of the 2D images during the first period.

[Claim 4]

The video signal processing apparatus according to Claim 2,

wherein the 2D video signal includes a plurality of 2D images, and

said output unit is configured to output a picture of each of the 2D images twice in a row during the first period.

[Claim 5]

The video signal processing apparatus according to Claim 2,

wherein the 3D video signal includes a plurality of left-eye images and a plurality of right-eye images, and

said output unit is configured to output one of (i) a picture of each of the left-eye images and (ii) a picture of each of the right-eye images, twice in a row during the second period.

[Claim 6]

The video signal processing apparatus according to Claim 1,

wherein said input unit is configured to obtain the 2D video signal having the predetermined display frame rate, and the 3D video signal having a frame rate twice as high as the predetermined display frame rate, and

said output unit is configured to convert the frame rate of the 3D video signal into the predetermined display frame rate.

[Claim 7]

The video signal processing apparatus according to Claim 6,

wherein the 3D video signal includes a plurality of left-eye images and a plurality of right-eye images, and

said output unit is configured to output one of (i) a picture of each of the left-eye images and (ii) a picture of each of the right-eye images, once during the second period.

[Claim 8]

A video signal processing method comprising:

obtaining a two-dimensional (2D) video signal and a three-dimensional (3D) video signal, the 2D video signal having a frame rate different from a frame rate of the 3D video signal; and

converting at least one of the frame rates of the 2D video signal and the 3D video signal obtained in said obtaining into a predetermined display frame rate, outputting the 2D video signal at the predetermined display frame rate during a first period, and outputting the 3D video signal at the predetermined display frame rate during a second period that is consecutive to the first period.

[Claim 9]

An integrated circuit comprising:

an input unit configured to obtain a two-dimensional (2D) video signal and a three-dimensional (3D) video signal, the 2D video signal having a frame rate different from a frame rate of the 3D video signal; and

an output unit configured to (i) convert at least one of the frame rates of the 2D video signal and the 3D video signal obtained by said input unit into a predetermined display frame rate, (ii) output the 2D video signal at the predetermined display frame rate during a first period, and (iii) output the 3D video signal at the predetermined display frame rate during a second period that is consecutive to the first period.

[Claim 10]

A program for causing a computer to execute a video signal processing method, said program including:

obtaining a two-dimensional (2D) video signal and a three-dimensional (3D) video signal, the 2D video signal having a frame rate different from a frame rate of the 3D video signal; and

converting at least one of the frame rates of the 2D video signal and the 3D video signal obtained in the obtaining into a predetermined display frame rate, outputting the 2D video signal at the

predetermined display frame rate during a first period, and outputting the 3D video signal at the predetermined display frame rate during a second period that is consecutive to the first period.

国際調査機関の見解書

国際出願番号　ＰＣＴ／ＪＰ２０１０／００５０４８

第Ｖ欄　新規性、進歩性又は産業上の利用可能性についてのＰＣＴ規則 43 の 2.1(a)(i)に定める見解、それを裏付ける文献及び説明

1.　見解

新規性（N）	請求項	1-10	有
	請求項		無
進歩性（ＩＳ）	請求項	1-10	有
	請求項		無
産業上の利用可能性（ＩＡ）	請求項	1-10	有
	請求項		無

2.　文献及び説明

文献 1: JP 10-322726 A(三洋電機株式会社), 1998.12.04,
段落[0002]-[0009], 図 3
文献 2: JP 10-276456 A(三洋電機株式会社), 1998.10.13,
段落[0010]-[0030], 図 2-3
文献 3: JP 7-013544 A(オリンパス株式会社), 1995.01.17,
段落[0010]-[0023], 図 1-4
文献 4: JP 2006-121553 A(シャープ株式会社), 2006.05.11,
段落[0015]-[0045], 図 1-5

(1)請求項 1-10
請求項 1-10 に記載された発明は、国際調査報告で引用された上記文献 1-4 の何れにも記載されておらず、また、これら文献から当業者に自明なものでもない。

WRITTEN OPINION OF THE
INTERNATIONAL SEARCHING AUTHORITY

International application No.
PCT/JP2010/005048

Box No. V Reasoned statement under Rule 43*bis*. 1(a)(i) with regard to novelty, inventive step and industrial applicability; citations and explanations supporting such statement

1. Statement

Novelty (N)	Claims	1 - 10	Yes
	Claims		No
Inventive step (IS)	Claims	1 - 10	Yes
	Claims		No
Industrial applicability (IA)	Claims	1 - 10	Yes
	Claims		No

2. Citations and explanations

Document 1: JP10-322726 A (Sanyo Electric Co., Ltd.), December 4, 1998,
Paragraphs [0002] - [0009], FIG. 3

Document 2: JP10-276456 A (Sanyo Electric Co., Ltd.), October 13, 1998
Paragraphs [0010] - [0030], FIG. 2 to FIG. 3

Document 3: JP7-013544 A (Olympus Optical Co, Ltd.), January 17, 1995
Paragraphs [0010] - [0023], FIG. 1 to FIG. 4

Document 4: JP2006-121553 A (Sharp Kabushiki Kaisha), May 11, 2006
Paragraphs [0015] - [0045], FIG. 1 to FIG. 5

(1) Claims 1 to 10

The invention claimed in Claims 1 to 10 is not disclosed by the documents 1 to 4 cited in the International Search Report, and therefore is not obvious to any person skilled in the art.

UNITED STATES PATENT AND TRADEMARK OFFICE

UNITED STATES DEPARTMENT OF COMMERCE
United States Patent and Trademark Office
Address: COMMISSIONER FOR PATENTS
P.O. Box 1450
Alexandria, Virginia 22313-1450
www.uspto.gov

APPLICATION NO.	FILING DATE	FIRST NAMED INVENTOR	ATTORNEY DOCKET NO.	CONFIRMATION NO.
13/163,982	06/20/2011	Kouki KISHIMOTO	P40322	1932

52123 7590 09/22/2011
GREENBLUM & BERNSTEIN, P.L.C.
1950 ROLAND CLARKE PLACE
RESTON, VA 20191

EXAMINER

ART UNIT	PAPER NUMBER
2482	

NOTIFICATION DATE	DELIVERY MODE
09/22/2011	ELECTRONIC

Please find below and/or attached an Office communication concerning this application or proceeding.

The time period for reply, if any, is set in the attached communication.

Notice of the Office communication was sent electronically on above-indicated "Notification Date" to the following e-mail address(es):

gbpatent@gbpatent.com
pto@gbpatent.com

UNITED STATES PATENT AND TRADEMARK OFFICE

Commissioner for Patents
United States Patent and Trademark Office
P.O. Box 1450
Alexandria, VA 22313-1450
www.uspto.gov

MAILED

SEP 21 2011

DIRECTOR OFFICE
TECHNOLOGY CENTER 2400

William Pieprz
GREENBLUM & BERNSTEIN, P.L.C.
1950 ROLAND CLARKE PLACE
RESTON, VA 20191

In re Application of: KISHIMOTO, K.
Application No.: **13/163,982**
Filed: June 20, 2011
Attorney Docket No.: P40322
For: VIDEO SIGNAL PROCESSING APPARATUS AND VIDEO SIGNAL PROCESSING METHOD

DECISION ON REQUEST TO PARTICIPATE IN PATENT PROSECUTION HIGHWAY PROGRAM AND PETITION TO MAKE SPECIAL UNDER 37 CFR 1.102(a)

This is a decision on the request to participate in the PCT-Patent Prosecution Highway (PPH) pilot program and the petition under 37 CFR 1.102(a), filed **September 6, 2011**, to make the above-identified application special.

The petition is **GRANTED.**

A grantable request to participate in the PCT PPH program and petition to make special require:

(1) The relationship between the corresponding U.S. application for which participation in the PCT-PPH pilot program is requested and the PCT application satisfies one of the following:

(a) The U.S. application is a national stage entry of the corresponding PCT application.

(b)The U.S. application is a national application which forms the basis for the priority claim in the corresponding PCT application.

(c) The U.S. application is a national stage entry of another PCT application (which can be filed in any competent receiving office) which claims priority to the corresponding PCT application.

(d) The U.S. application is a national application claiming foreign/domestic priority to the corresponding PCT application.

(e) The U.S. application is a continuing application (continuation, divisional, or continuation-in-part) of the U.S. application which satisfies one of the above (a) to (d) scenarios.

(2) The latest work product in the international phase of the PCT application corresponding to the U.S. application indicates at least one claim in the PCT application has novelty, inventive step and industrial applicability. In case any observation is described in Box VIII of the WO/ISA, or WO/IPEA, or IPER which forms the basis for the PCT-PPH request, applicant must identify and explain why the claim(s) is/are not subject to any observation described in Box VIII irrespective of whether an amendment is submitted to correct the observation described in Box VIII.

(3) All the claims in each U.S. application for which a request for participation in the PCT-PPH pilot program is made must sufficiently correspond to or be amended to sufficiently correspond to one or more of those claims indicated as having novelty, inventive step and industrial applicability and free of any observation described in Box VIII in the latest work product of the corresponding PCT application.

(4) Substantive examination of the U.S. application for which participation in the PCT-PPH pilot program is requested has not begun.

(5) Applicant must submit a copy of the latest international work product which indicated that the claim(s) has/have novelty, inventive step and industrial applicability along with an English translation thereof if the copy of the latest international work product is not in the English language.

(6) Applicant must submit a copy of the claims from the corresponding PCT application which were indicated as having novelty, inventive step and industrial applicability in the latest work product of the PCT application along with an English translation thereof and a statement that the English translation is accurate if the claims are not in the English language.

(7) Applicant is required to submit a claims correspondence table in English. The claims correspondence table must indicate how all the claims in the U.S. application sufficiently correspond to the claims indicated as having novelty, inventive step and industrial applicability in the latest international work product.

(8) Applicant must submit an information disclosure statement (IDS) listing the documents cited in the international work products (ISR, WOIISA, WOIIPEA, PER) of the PCT.

(9) The request for participation in the PCT-PPH pilot program and all the supporting documents must be submitted to the USPTO via EFS-Web and indexed with the following document description: "Petition to make special under PCT-Patent Pros Hwy. Any preliminary amendments and IDS submitted with the PCT-PPH documents must be separately indexed as a preliminary amendment and IDS, respectively.

The request to participate in the PPH program and petition are found to comply with all the above requirements. Accordingly, the above-identified application has been accorded "**special**" status.

Accordingly, the petition is **GRANTED**.

The application is being forwarded to the examiner for action on the merits commensurate with this decision.

Telephone inquiries concerning this decision should be directed to Beatriz Prieto at 571-272-3902. A second point of contact is Hassan Kizou at 571-272-3088.

All other inquiries concerning the examination or status of the application is accessible in the PAIR system at http://www.uspto.gov/ebc/index.html.

/Beatriz Prieto/

Beatriz Prieto, Quality Assurance Specialist
Technology Center 2400

Doc code : PET.OP.AGE
Description : Petition to make special based on Age/Health

PTO/SB/130 (07-09)
Approved for use through 07/31/2012. OMB 0651- 0031
U.S. Patent and Trademark Office; U.S. DEPARTMENT OF COMMERCE
Under the Paperwork Reduction Act of 1995, no persons are required to respond to a collection of information unless it contains a valid OMB control number

PETITION TO MAKE SPECIAL BASED ON AGE FOR ADVANCEMENT OF EXAMINATION UNDER 37 CFR 1.102(c)(1)

Application Information

Application Number	13163983	Confirmation Number	1936	Filing Date	2001-06-20
Attorney Docket Number (optional)	20080405.CIP	Art Unit		Examiner	
First Named Inventor	Eugine W. Goad				
Title of Invention	Reinforced Supporting Connectors for Tubular Grab Railings				

Attention: Office of Petitions
An application may be made special for advancement of examination upon filing of a petition showing that the applicant is 65 years of age, or more. No fee is required with such a petition. See 37 CFR 1.102(c)(1) and MPEP 708.02 (IV).

APPLICANT HEREBY PETITIONS TO MAKE SPECIAL FOR ADVANCEMENT OF EXAMINATION IN THIS APPLICATION UNDER 37 CFR 1.102(c)(1) and MPEP 708.02 (IV) ON THE BASIS OF THE APPLICANT'S AGE.

A grantable petition requires one of the following items:
(1) Statement by one named inventor in the application that he/she is 65 years of age, or more; or
(2) Certification by a registered attorney/agent having evidence such as a birth certificate, passport, driver's license, etc. showing one named inventor in the application is 65 years of age, or more.

Name of Inventor who is 65 years of age, or older

Given Name	Middle Name	Family Name	Suffix
Eugine	W.	Goad	

A signature of the applicant or representative is required in accordance with 37 CFR 1.33 and 10.18.
Please see 37 CFR 1.4(d) for the format of the signature.

Select (1) or (2) :

○ (1) I am an inventor in this application and I am 65 years of age, or more.

● (2) I am an attorney or agent registered to practice before the Patent and Trademark Office, and I certify that I am in possession of evidence, and will retain such in the application file record, showing that the inventor listed above is 65 years of age, or more.

Signature	/james v. harmon/	Date (YYYY-MM-DD)	2011-06-21
Name	James V. Harmon	Registration Number	18940

PTO/SB/130 (07-09)
Approved for use through 07/31/2012. OMB 0651- 0031
U.S. Patent and Trademark Office; U.S. DEPARTMENT OF COMMERCE
Under the Paperwork Reduction Act of 1995, no persons are required to respond to a collection of information unless it contains a valid OMB control number

Privacy Act Statement

The Privacy Act of 1974 (P.L. 93-579) requires that you be given certain information in connection with your submission of the attached form related to a patent application or patent. Accordingly, pursuant to the requirements of the Act, please be advised that: (1) the general authority for the collection of this information is 35 U.S.C. 2(b)(2); (2) furnishing of the information solicited is voluntary; and (3) the principal purpose for which the information is used by the U.S. Patent and Trademark Office is to process and/or examine your submission related to a patent application or patent. If you do not furnish the requested information, the U.S. Patent and Trademark Office may not be able to process and/or examine your submission, which may result in termination of proceedings or abandonment of the application or expiration of the patent.

The information provided by you in this form will be subject to the following routine uses:

1. The information on this form will be treated confidentially to the extent allowed under the Freedom of Information Act (5 U.S.C. 552) and the Privacy Act (5 U.S.C. 552a). Records from this system of records may be disclosed to the Department of Justice to determine whether the Fr eedom of Information Act requires disclosure of these records.

2. A record from this system of records may be disclosed, as a routine use, in the course of presenting evidence to a court, magistrate, or administrative tribunal, including disclosures to opposing counsel in the course of settlement negotiations.

3. A record in this system of records may be disclosed, as a routine use, to a Member of Congress submitting a request involving an individual, to whom the record pertains, when the individual has requested assistance from the Member with respect to the subject matter of the record.

4. A record in this system of records may be disclosed, as a routine use, to a contractor of the Agency having need for the information in order to perform a contract. Recipients of information shall be required to comply with the requirements of the Privacy Act of 1974, as amended, pursuant to 5 U.S.C. 552a(m).

5. A record related to an International Application filed under the Patent Cooperation Treaty in this system of records may be disclosed, as a routine use, to the International Bureau of the World Intellectual Property Organization, pursuant to the Patent Cooperation Treaty.

6. A record in this system of records may be disclosed, as a routine use, to another federal agency for purposes of National Security review (35 U.S.C. 181) and for review pursuant to the Atomic Energy Act (42 U.S.C. 218(c)).

7. A record from this system of records may be disclosed, as a routine use, to the Administrator, General Services, or his/her designee, during an inspection of records conducted by GSA as part of that agency's responsibility to recommend improvements in records management practices and programs, under authority of 44 U.S.C. 2904 and 2906. Such disclosure shall be made in accordance with the GSA regulations governing inspection of records for this purpose, and any other relevant (i.e., GSA or Commerce) directive. Such disclosure shall not be used to make determinations about indivi duals.

8. A record from this system of records may be disclosed, as a routine use, to the public after either publication of the application pursuant to 35 U.S.C. 122(b) or issuance of a patent pursuant to 35 U.S.C. 151. Further, a record may be disclosed, subject to the limitations of 37 CFR 1.14, as a routine use, to the public if the record was filed in an application which became abandoned or in which the proceedings were terminated and which application is referenced by either a published application, an application open to public inspections or an issued patent.

9. A record from this system of records may be disclosed, as a routine use, to a Federal, State, or local law enforcement agency, if the USPTO becomes aware of a violation or potential violation of law or regulation.

UNITED STATES PATENT AND TRADEMARK OFFICE

Commissioner for Patents
United States Patent and Trademark Office
P.O. Box 1450
Alexandria, VA 22313-1450
www.uspto.gov

In re Application of
Eugine W. Goad

Application No. 13163983

Filed:

Attorney Docket No. 20080405.CIP

:DECISION ON PETITION TO MAKE SPECIAL
:UNDER 37 CFR 1.102(c)(1)

This is a decision on the electronic petition under 37 CFR 1.102 (c)(1), filed 21-JUN-2011 to make the above-identified application special based on applicant's age as set forth in MPEP § 708.02, Section IV.

The petition is **GRANTED**.

A grantable petition to make an application special under 37 CFR 1.102(c)(1), MPEP § 708.02, Section IV: Applicant's Age must include a statement by applicant or a registered practitioner having evidence that applicant is at least 65 years of age. No fee is required.

Accordingly, the above-identified application has been accorded "special" status and will be taken up for action by the examiner upon the completion of all pre-examination processing.

Telephone inquiries concerning this electronic decision should be directed to the Electronic Business Center at 866-217-9197.

All other inquiries concerning either the examination or status of the application should be directed to the Technology Center.

PTO/SB/20PCT-KR (06-10)
Approved for use through 01/31/2012. OMB 0651-0058
U.S. Patent and Trademark Office; U. S. DEPARTMENT OF COMMERCE
Under the Paperwork Reduction Act of 1995, no persons are required to respond to a collection of information unless it displays a valid OMB control number.

REQUEST FOR PARTICIPATION IN THE PATENT COOPERATION TREATY - PATENT PROSECUTION HIGHWAY (PCT-PPH) PILOT PROGRAM BETWEEN THE KOREAN INTELLECTUAL PROPERTY OFFICE (KIPO) AND THE USPTO

Application No:	13/163,999	Filing date:	20 June 2011
First Named Inventor:	David K. Stroup		
Title of the Invention:	DEVICES, ASSEMBLIES, AND METHODS FOR CONTROLLING FLUID FLOW		

THIS REQUEST FOR PARTICIPATION IN THE PCT-PPH PILOT PROGRAM ALONG WITH THE REQUIRED DOCUMENTS MUST BE SUBMITTED VIA EFS-WEB. INFORMATION REGARDING EFS-WEB IS AVAILABLE AT HTTP://WWW.USPTO.GOV/EBC/EFS_HELP.HTML

APPLICANT HEREBY REQUESTS PARTICIPATION IN THE PCT-PPH PROGRAM AND PETITIONS TO MAKE THE ABOVE-IDENTIFIED APPLICATION SPECIAL UNDER THE PCT-PPH PROGRAM.

The above-identified application is (1) a national stage entry of the corresponding PCT application, or (2) a national stage entry of another PCT application which claims priority to the corresponding PCT application, or (3) a national application that claims domestic/ foreign priority to the corresponding PCT application, or (4) a national application which forms the basis for the priority claim in the corresponding PCT application, or (5) a continuing application of a U.S. application that satisfies one of (1) to (4) above, or (6) a U.S. application that claims domestic benefit to a U.S. provisional application which forms the basis for the priority claim in the corresponding PCT application.

The corresponding PCT application number(s) is/are: PCT/US2009/036088

The international date of the corresponding PCT application(s) is/are: 04 March 2009

I. List of Required Documents:

a. **A copy of the latest international work product (WO/ISA, WO/IPEA, or IPER) in the above–identified corresponding PCT application(s)**

☐ Is attached.

☒ Is not attached because the document is already in the U.S. application.

b. **A copy of all claims which were indicated as having novelty, inventive step and industrial applicability in the above-identified corresponding PCT application(s).**

☒ Is attached.

☐ Is not attached because the document is already in the U.S. application.

c. **English translations of the documents in a. and b. above are attached (if the documents are not in the English language). A statement that the English translation is accurate is attached for the document in b. above.**

This collection of information is required by 35 U.S.C. 119, 37 CFR 1.55, and 37 CFR 1.102(d). The information is required to obtain or retain a benefit by the public, which is to file (and by the USPTO to process) an application. Confidentiality is governed by 35 U.S.C. 122 and 37 CFR 1.11 and 1.14. This collection is estimated to take 2 hours to complete, including gathering, preparing, and submitting the completed application form to the USPTO. Time will vary depending upon the individual case. Any comments on the amount of time you require to complete this form and/or suggestions for reducing this burden should be sent to the Chief Information Officer, U.S. Patent and Trademark Office, U.S. Department of Commerce, P.O. Box 1450, Alexandria, VA 22313-1450. DO NOT SEND FEES OR COMPLETED FORMS TO THIS ADDRESS.

Approved for use through 01/31/2012. OMB 0651-0058
U.S.Patent and Trademark Office; U.S. DEPARTMENT OF COMMERCE
Under the Paperwork Reduction Act of 1995, no persons are required to respond to a collection of information unless it displays a valid OMB control number.

REQUEST FOR PARTICIPATION IN THE PCT-PPH PILOT PROGRAM BETWEEN THE KIPO AND THE USPTO

(continued)

Application No.:	13/163,999
First Named Inventor:	David K. Stroup

d. **(1) An information disclosure statement listing the documents cited in the international work products (ISR, WO/ISA, WO/IPEA, IPER) of the corresponding PCT application.**

☐ Is attached

☒ Has already been filed in the above-identified U.S. application on Oct. 6, 2010 and Nov. 14, 2011

(2) Copies of all documents (except) for U.S. patents or U.S. patent application publications)

☒ Are attached.

Have already been filed in the above-identified U.S. application on Oct. 6, 2010 and Nov. 14, 2011

II. Claims Correspondence Table:

Claims in US Application	Patentable Claims in the corresponding PCT Application	Explanation regarding the correspondence
1-81	1-81	same claims

III. All the claims in the US application sufficiently correspond to the patentable claims in the corresponding PCT application.

Signature /Stephen C. Beuerle/	Date November 14, 2011
Name (Print/Typed) Stephen C. Beuerle	Registration Number 38,380

Privacy Act Statement

The **Privacy Act of 1974 (P.L. 93-579)** requires that you be given certain information in connection with your submission of the attached form related to a patent application or patent. Accordingly, pursuant to the requirements of the Act, please be advised that: (1) the general authority for the collection of this information is 35 U.S.C. 2(b)(2); (2) furnishing of the information solicited is voluntary; and (3) the principal purpose for which the information is used by the U.S. Patent and Trademark Office is to process and/or examine your submission related to a patent application or patent. If you do not furnish the requested information, the U.S. Patent and Trademark Office may not be able to process and/or examine your submission, which may result in termination of proceedings or abandonment of the application or expiration of the patent.

The information provided by you in this form will be subject to the following routine uses:

1. The information on this form will be treated confidentially to the extent allowed under the Freedom of Information Act (5 U.S.C. 552) and the Privacy Act (5 U.S.C 552a). Records from this system of records may be disclosed to the Department of Justice to determine whether disclosure of these records is required by the Freedom of Information Act.
2. A record from this system of records may be disclosed, as a routine use, in the course of presenting evidence to a court, magistrate, or administrative tribunal, including disclosures to opposing counsel in the course of settlement negotiations.
3. A record in this system of records may be disclosed, as a routine use, to a Member of Congress submitting a request involving an individual, to whom the record pertains, when the individual has requested assistance from the Member with respect to the subject matter of the record.
4. A record in this system of records may be disclosed, as a routine use, to a contractor of the Agency having need for the information in order to perform a contract. Recipients of information shall be required to comply with the requirements of the Privacy Act of 1974, as amended, pursuant to 5 U.S.C. 552a(m).
5. A record related to an International Application filed under the Patent Cooperation Treaty in this system of records may be disclosed, as a routine use, to the International Bureau of the World Intellectual Property Organization, pursuant to the Patent Cooperation Treaty.
6. A record in this system of records may be disclosed, as a routine use, to another federal agency for purposes of National Security review (35 U.S.C. 181) and for review pursuant to the Atomic Energy Act (42 U.S.C. 218(c)).
7. A record from this system of records may be disclosed, as a routine use, to the Administrator, General Services, or his/her designee, during an inspection of records conducted by GSA as part of that agency's responsibility to recommend improvements in records management practices and programs, under authority of 44 U.S.C. 2904 and 2906. Such disclosure shall be made in accordance with the GSA regulations governing inspection of records for this purpose, and any other relevant (*i.e.*, GSA or Commerce) directive. Such disclosure shall not be used to make determinations about individuals.
8. A record from this system of records may be disclosed, as a routine use, to the public after either publication of the application pursuant to 35 U.S.C. 122(b) or issuance of a patent pursuant to 35 U.S.C. 151. Further, a record may be disclosed, subject to the limitations of 37 CFR 1.14, as a routine use, to the public if the record was filed in an application which became abandoned or in which the proceedings were terminated and which application is referenced by either a published application, an application open to public inspection or an issued patent.
9. A record from this system of records may be disclosed, as a routine use, to a Federal, State, or local law enforcement agency, if the USPTO becomes aware of a violation or potential violation of law or regulation.

UNITED STATES PATENT AND TRADEMARK OFFICE

UNITED STATES DEPARTMENT OF COMMERCE
United States Patent and Trademark Office
Address: COMMISSIONER FOR PATENTS
P.O. Box 1450
Alexandria, Virginia 22313-1450
www.uspto.gov

APPLICATION NO.	FILING DATE	FIRST NAMED INVENTOR	ATTORNEY DOCKET NO.	CONFIRMATION NO.
13/163,999	06/20/2011	David K. Stroup	115591-102CON	1972

27189 7590 11/29/2011
PROCOPIO, CORY, HARGREAVES & SAVITCH LLP
525 B STREET
SUITE 2200
SAN DIEGO, CA 92101

EXAMINER

ART UNIT	PAPER NUMBER
3767	

NOTIFICATION DATE	DELIVERY MODE
11/29/2011	ELECTRONIC

Please find below and/or attached an Office communication concerning this application or proceeding.

The time period for reply, if any, is set in the attached communication.

Notice of the Office communication was sent electronically on above-indicated "Notification Date" to the following e-mail address(es):

docketing@procopio.com
PTONotifications@procopio.com

UNITED STATES PATENT AND TRADEMARK OFFICE

Commissioner for Patents
United States Patent and Trademark Office
P.O. Box 1450
Alexandria, VA 22313-1450
www.uspto.gov

PROCOPIO, CORY, HARGREAVES & SAVITCH LLP
525 B STREET
SUITE 2200
SAN DIEGO CA 92101

In re Application of	:	
STROUP, DAVID K.	:	DECISION ON REQUEST TO
Application No. 13/163,999	:	PARTICIPATE IN PATENT
Filed: Dec. 31, 2009	:	PCT/PROSECUTION HIGHWAY
Attorney Docket No. 4247.01US02	:	PROGRAM AND PETITION
Title: METHODS AND APPARATUS FOR	:	TO MAKE SPECIAL UNDER
VERTEBRAL BODY DISTRACTION AND	:	37 CFR 1.102(a)
FUSION EMPLOYING FLEXURE MEMBERS		

This is a decision on the request to participate in the Patent Prosecution Highway (PPH) program and the petition under 37 CFR 1.102(a), filed Nov. 14, 2011, to make the above-identified application special.

The request and petition are dismissed.

A grantable request to participate in the PPH program and petition to make special require:
(1) The U.S. application must disclose an eligible relationship to one or more PCT applications filed in the KIPO, JPO, EPO or USPTO;
(2) Applicant must submit a copy of the allowable/patentable claim(s) from the PCT application(s) latest international work product (the written opinion or the IPER) along with an English translation thereof and a statement that the English translation is accurate;
(3) All the claims in the U.S. application must sufficiently correspond or be amended to sufficiently correspond to the allowable/patentable claim(s) in the PCT application(s);
(4) Examination of the U.S. application has not begun;
(5) Applicant must submit a copy of the latest international work product from the PCT application containing the allowable/patentable claim(s) along with an English translation thereof and a statement that the English translation is accurate; and
(6) Applicant must submit an IDS listing the documents cited by the PCT examiner in the international work product along with copies of documents except U.S. patents or U.S. patent application publications.

With regard to Item #1, the applicant did not include any disclosure any eligible relationship to one or more PCT applications filed in the KIPO or USPTO in the oath/declaration filed on June 20, 2011. A new oath or declaration stating an eligible relationship to one or more PCT applications filed in the KIPO or USPTO is required.

Applicant is encouraged to cite and submit all relevant prior art references, if any, to facilitate examination in this application.

Applicant is given a time period of **ONE MONTH or THIRTY DAYS**, whichever is longer, from the mailing date of this decision to correct the deficiencies. **NO EXTENSION OF TIME UNDER 37 CFR 1.136 IS PERMITTED.** If the deficiencies are not corrected with the time period given, the application will await action in its regular turn. Response must be filed via EFS-Web. Currently, the application is undergoing pre-examination processing.

Telephone inquiries concerning this decision should be directed to Henry C. Yuen at 571-272-4856.

Petition is **dismissed**.

/Henry C. Yuen/

Henry C. Yuen, Special Programs Examiner
Technology Center 3700 – Mechanical Engineering,
Manufacturing and Products
571-272-4856

PTO/SB/20PCT-KR (06-10)
Approved for use through 01/31/2012. OMB 0651-0058
U.S. Patent and Trademark Office; U. S. DEPARTMENT OF COMMERCE
Under the Paperwork Reduction Act of 1995, no persons are required to respond to a collection of information unless it displays a valid OMB control number.

REQUEST FOR PARTICIPATION IN THE PATENT COOPERATION TREATY - PATENT PROSECUTION HIGHWAY (PCT-PPH) PILOT PROGRAM BETWEEN THE KOREAN INTELLECTUAL PROPERTY OFFICE (KIPO) AND THE USPTO

Application No:	13/163,999	Filing date:	20 June 2011
First Named Inventor:	David K. Stroup		
Title of the Invention:	DEVICES, ASSEMBLIES, AND METHODS FOR CONTROLLING FLUID FLOW		

THIS REQUEST FOR PARTICIPATION IN THE PCT-PPH PILOT PROGRAM ALONG WITH THE REQUIRED DOCUMENTS MUST BE SUBMITTED VIA EFS-WEB. INFORMATION REGARDING EFS-WEB IS AVAILABLE AT HTTP://WWW.USPTO.GOV/EBC/EFS_HELP.HTML

APPLICANT HEREBY REQUESTS PARTICIPATION IN THE PCT-PPH PROGRAM AND PETITIONS TO MAKE THE ABOVE-IDENTIFIED APPLICATION SPECIAL UNDER THE PCT-PPH PROGRAM.

The above-identified application is (1) a national stage entry of the corresponding PCT application, or (2) a national stage entry of another PCT application which claims priority to the corresponding PCT application, or (3) a national application that claims domestic/ foreign priority to the corresponding PCT application, or (4) a national application which forms the basis for the priority claim in the corresponding PCT application, or (5) a continuing application of a U.S. application that satisfies one of (1) to (4) above, or (6) a U.S. application that claims domestic benefit to a U.S. provisional application which forms the basis for the priority claim in the corresponding PCT application.

The corresponding PCT application number(s) is/are: PCT/US2009/036088

The international date of the corresponding PCT application(s) is/are: 04 March 2009

I. List of Required Documents:

a. **A copy of the latest international work product (WO/ISA, WO/IPEA, or IPER) in the above–identified corresponding PCT application(s)**

☐ Is attached.

☒ Is not attached because the document is already in the U.S. application.

b. **A copy of all claims which were indicated as having novelty, inventive step and industrial applicability in the above-identified corresponding PCT application(s).**

☒ Is attached.

☐ Is not attached because the document is already in the U.S. application.

c. **English translations of the documents in a. and b. above are attached (if the documents are not in the English language). A statement that the English translation is accurate is attached for the document in b. above.**

This collection of information is required by 35 U.S.C. 119, 37 CFR 1.55, and 37 CFR 1.102(d). The information is required to obtain or retain a benefit by the public, which is to file (and by the USPTO to process) an application. Confidentiality is governed by 35 U.S.C. 122 and 37 CFR 1.11 and 1.14. This collection is estimated to take 2 hours to complete, including gathering, preparing, and submitting the completed application form to the USPTO. Time will vary depending upon the individual case. Any comments on the amount of time you require to complete this form and/or suggestions for reducing this burden should be sent to the Chief Information Officer, U.S. Patent and Trademark Office, U.S. Department of Commerce, P.O. Box 1450, Alexandria, VA 22313-1450. DO NOT SEND FEES OR COMPLETED FORMS TO THIS ADDRESS.

Approved for use through 01/31/2012. OMB 0651-0058
U.S.Patent and Trademark Office; U.S. DEPARTMENT OF COMMERCE
Under the Paperwork Reduction Act of 1995, no persons are required to respond to a collection of information unless it displays a valid OMB control number.

REQUEST FOR PARTICIPATION IN THE PCT-PPH PILOT PROGRAM BETWEEN THE KIPO AND THE USPTO

(continued)

Application No.:	13/163,999
First Named Inventor:	David K. Stroup

d. **(1) An information disclosure statement listing the documents cited in the international work products (ISR, WO/ISA, WO/IPEA, IPER) of the corresponding PCT application.**

☐ Is attached

☒ Has already been filed in the above-identified U.S. application on Oct. 6, 2010 and Nov. 14, 2011

(2) Copies of all documents (except) for U.S. patents or U.S. patent application publications)

☒ Are attached.

Have already been filed in the above-identified U.S. application on Oct. 6, 2010 and Nov. 14, 2011

II. Claims Correspondence Table:

Claims in US Application	Patentable Claims in the corresponding PCT Application	Explanation regarding the correspondence
1-81	1-81	same claims

III. All the claims in the US application sufficiently correspond to the patentable claims in the corresponding PCT application.

Signature /Stephen C. Beuerle/	Date January 3, 2012
Name (Print/Typed) Stephen C. Beuerle	Registration Number 38,380

Privacy Act Statement

The **Privacy Act of 1974 (P.L. 93-579)** requires that you be given certain information in connection with your submission of the attached form related to a patent application or patent. Accordingly, pursuant to the requirements of the Act, please be advised that: (1) the general authority for the collection of this information is 35 U.S.C. 2(b)(2); (2) furnishing of the information solicited is voluntary; and (3) the principal purpose for which the information is used by the U.S. Patent and Trademark Office is to process and/or examine your submission related to a patent application or patent. If you do not furnish the requested information, the U.S. Patent and Trademark Office may not be able to process and/or examine your submission, which may result in termination of proceedings or abandonment of the application or expiration of the patent.

The information provided by you in this form will be subject to the following routine uses:

1. The information on this form will be treated confidentially to the extent allowed under the Freedom of Information Act (5 U.S.C. 552) and the Privacy Act (5 U.S.C 552a). Records from this system of records may be disclosed to the Department of Justice to determine whether disclosure of these records is required by the Freedom of Information Act.
2. A record from this system of records may be disclosed, as a routine use, in the course of presenting evidence to a court, magistrate, or administrative tribunal, including disclosures to opposing counsel in the course of settlement negotiations.
3. A record in this system of records may be disclosed, as a routine use, to a Member of Congress submitting a request involving an individual, to whom the record pertains, when the individual has requested assistance from the Member with respect to the subject matter of the record.
4. A record in this system of records may be disclosed, as a routine use, to a contractor of the Agency having need for the information in order to perform a contract. Recipients of information shall be required to comply with the requirements of the Privacy Act of 1974, as amended, pursuant to 5 U.S.C. 552a(m).
5. A record related to an International Application filed under the Patent Cooperation Treaty in this system of records may be disclosed, as a routine use, to the International Bureau of the World Intellectual Property Organization, pursuant to the Patent Cooperation Treaty.
6. A record in this system of records may be disclosed, as a routine use, to another federal agency for purposes of National Security review (35 U.S.C. 181) and for review pursuant to the Atomic Energy Act (42 U.S.C. 218(c)).
7. A record from this system of records may be disclosed, as a routine use, to the Administrator, General Services, or his/her designee, during an inspection of records conducted by GSA as part of that agency's responsibility to recommend improvements in records management practices and programs, under authority of 44 U.S.C. 2904 and 2906. Such disclosure shall be made in accordance with the GSA regulations governing inspection of records for this purpose, and any other relevant (*i.e.*, GSA or Commerce) directive. Such disclosure shall not be used to make determinations about individuals.
8. A record from this system of records may be disclosed, as a routine use, to the public after either publication of the application pursuant to 35 U.S.C. 122(b) or issuance of a patent pursuant to 35 U.S.C. 151. Further, a record may be disclosed, subject to the limitations of 37 CFR 1.14, as a routine use, to the public if the record was filed in an application which became abandoned or in which the proceedings were terminated and which application is referenced by either a published application, an application open to public inspection or an issued patent.
9. A record from this system of records may be disclosed, as a routine use, to a Federal, State, or local law enforcement agency, if the USPTO becomes aware of a violation or potential violation of law or regulation.

UNITED STATES PATENT AND TRADEMARK OFFICE

Commissioner for Patents
United States Patent and Trademark Office
P.O. Box 1450
Alexandria, VA 22313-1450
www.uspto.gov

PROCOPIO, CORY, HARGREAVES & SAVITCH LLP
525 B STREET
SUITE 2200
SAN DIEGO CA 92101

MAILED

JAN 20 2012

OFFICE OF PETITIONS

In re Application of:
David K. Stroup
Application No. 13/163,999
Filed: June 20, 2011
Attorney Docket No. 115591-102CON

: DECISION ON REQUEST TO
: PARTICIPATE IN THE PATENT
: PROSECUTION HIGHWAY
: PROGRAM AND PETITION
: TO MAKE SPECIAL UNDER
: 37 CFR 1.102(a)

This is a decision on the second request to participate in the PCT Patent Prosecution Highway (PCT-PPH) program and the petition under 37 CFR 1.102(a), filed January 3, 2012, to make the above-identified application special.

A decision on the first request to participate in the Patent Prosecution Highway program and petition to make special under 37 CFR 1.102(a) was mailed November 29, 2011. The decision allowed for a one month or thirty days response period with no extension of time under 37 CFR 1.136 permitted. The response period expired December 30, 2011. Petitioner submitted an untimely response on January 3, 2012.

Further, petitioner is permitted only two attempts to qualify to participate in the Patent Prosecution Highway (PCT-PPH) program and petition under 37 CFR 1.102(a).

Therefore the request and petition are **DENIED**.

Since the deficiencies were not corrected within the time period given, the application will await action in its regular turn.

Telephone inquiries concerning this decision should be directed to Joan Olszewski at 571-272-7751.

All other inquiries concerning the examination or status of the application is accessible in the PAIR system at http://www.uspto.gov/ebc/index.html.

Anthony Knight
Director
Office of Petitions

UNITED STATES PATENT AND TRADEMARK OFFICE

UNITED STATES DEPARTMENT OF COMMERCE
United States Patent and Trademark Office
Address: COMMISSIONER FOR PATENTS
P.O. Box 1450
Alexandria, Virginia 22313-1450
www.uspto.gov

APPLICATION NO.	FILING DATE	FIRST NAMED INVENTOR	ATTORNEY DOCKET NO.	CONFIRMATION NO.
13/164,007	06/20/2011	Marcos GONZALEZ	10020-002US	1990

95248 7590 08/09/2011
Northern Virginia Law and Technology Services, LLC
1934 Old Gallows Rd
Suite 350
Vienna, VA 22182

EXAMINER
MENON, KRISHNAN S

ART UNIT	PAPER NUMBER
1777	

MAIL DATE	DELIVERY MODE
08/09/2011	PAPER

Please find below and/or attached an Office communication concerning this application or proceeding.

The time period for reply, if any, is set in the attached communication.

UNITED STATES PATENT AND TRADEMARK OFFICE

Commissioner for Patents
United States Patent and Trademark Office
P.O. Box 1450
Alexandria, VA 22313-1450
www.uspto.gov

8/9/11

CST

In re application of Marcos Gonzalez et al Serial No. 13/164,007 Filed: June 20, 2011 For: HIGH-EFFICIENCY BIOREACTOR AND METHOD OF USE THEREOF	:	DECISION ON PETITION TO MAKE SPECIAL

This is a decision on the petition filed on June 20, 2011 to make the above-identified application special under the accelerated examination program.

The petition to make the application special is **DISMISSED.**

REGULATION AND PRACTICE

A grantable petition to make special under 37 C.F.R. § 1.102(d) and pursuant to the "Change to Practice for Petitions in Patent Applications to Make Special and for Accelerated Examination" published in the Federal Register on June 26, 2006 (71 Fed. Reg. 36323), must satisfy the following conditions:

I. Conditions Regarding the Application:

1. the application must be a non-reissue utility or design application filed under 37 CFR 1.111(a);
2. the application, the petition and the required fees must be filed electronically using the USPTO's electronic filing system (EFS), or EFS-web; if not filed electronically, a statement asserting that EFS and EFS-web were not available during the normal business hours;
3. at the time of filing, the application must be complete under 37 CFR 1.51 and in condition for examination;
4. the application must contain three or fewer independent claims and twenty or fewer total claims and the claims must be directed to a single invention.

II. Conditions Regarding the Petition:

The petition must:

1. be filed with the application;
2. include a statement that applicant agrees not to separately argue the patentability of any dependent claim during any appeal in the application;

3. include a statement that applicant agrees to make an election without traverse in a telephone interview;

4. include a statement that applicant agrees to conduct such an interview when requested by the examiner;

5. include a statement, made based on a good faith belief, that a preexamination search in compliance with the following requirements, was conducted, including an identification of the field of search by United States class and subclass, where applicable, and for database searches, the search logic or chemical structure or sequence used as a query, the name of the file(s) searched and the database service, and the date of the search.

The preexamination search must:

5.1 involve U.S. patents and patent application publications, foreign patent documents, and non-patent literature, unless the applicant can justify with reasonable certainty that no references more pertinent than those already identified are likely to be found in the eliminated sources and includes such a justification with this statement;

5.2. be directed to the claimed invention and encompass all of the features of the claims, giving the claims the broadest reasonable interpretation;

5.3. encompass the disclosed features that may be claimed.

6. must provide in support of the petition an accelerated examination support document.

An accelerated examination support document must include:

6.1. an information disclosure statement (IDS) in compliance with 37 CFR 1.98 citing each reference deemed most closely related to the subject matter of each of the claims;

6.2. an identification of all the limitations in the claims that are disclosed by the reference specifying where the limitation is disclosed in the cited reference;

6.3. a detailed explanation of how each of the claims are patentable over the references cited with particularity required by 37 CFR 1.111(b) and (c);

6.4. a concise statement of the utility of the invention as defined in each of the independent claims (unless the application is a design application);

6.5. a showing of where each limitation of the claims finds support under 35 USC 112, first paragraph, in the written description of the specification. If applicable, the showing must also identify: (1) each means- (or step) plus-function claim element that invokes consideration under 35 USC 112, sixth paragraph; and (2) the structure, material, or acts in the specification that corresponds to each means- (or step) plus-function claim element that invokes consideration under 35 USC 112, sixth paragraph; if the application claims the benefit of one or more applications under title 35, United States Code, the showing must also include where each limitation of the claims finds support under 35 USC 112, first paragraph, in each such application in which such supports exists;

6.6. an identification of any cited references that may be disqualified under 35 USC 103(c).

REVIEW OF FACTS

The conditions regarding the application (section I, subsections 1-4) discussed above are considered to have been met. Additionally, the conditions regarding the petition, section II, subsections 1-5, are considered to have been met. However, the petition fails to comply with condition II, subsection 6.

Three of the references listed on the Information Disclosure Statement (IDS) have not been discussed in the Accelerated Examination Support Document (AESD). These references include US patents to Strong, Bomberger et al and Cho et al. However, there is a presumption that each of the cited references is considered most relevant to the claimed invention and that an identification of where all of the limitations in the claims that are disclosed in the references is required.

Applicant is encouraged to review the Frequently Asked Questions concerning the Accelerated Examination Program posted on www.uspto.gov. Specifically, note the question and answer reproduced below:

IDS 3. Will the Office accept an accelerated examination support document (AESD) that contains a list of references in the information disclosure statement (IDS) of the AESD, but does not include any identification and explanation for those references that are not required to be submitted in the IDS of the AESD (*i.e.*, references that are not most closely related to the subject matter of each of the claims)?

No, the AESD will be deemed insufficient for lack of identification and explanation. The applicant will be notified of the defects and the application will remain in the status of a new application awaiting action in its regular turn. The applicant will be given a time period of one month, without any extension of time under 37 CFR §1.136(a), to perfect the petition.

If applicant wishes to cite references that are not required in an AESD for the examiner to consider, applicant may submit such references in a separate IDS in compliance with 37 CFR §1.97 and §1.98. Applicant should clearly identify the IDS of the AESD that is in support of the petition to make special and, similarly, applicant should clearly identify the separate IDS that is not in support of the petition. Consistent with 37 CFR §10.18, any reference submitted in a separate IDS that is not part of an AESD will be treated as a representation by applicant to the USPTO that no reference submitted in the separate IDS is deemed closer to the subject matter of at least one claim than the references provided in the AESD.

Additionally, it is required that petitioner provide a showing of where each limitation of the claims finds support under 35 USC 112, first paragraph, in the written description of parent application 13/072,787 and provisional application 61/306,484 as applicant has claimed priority to these applications in the Application Data Sheet. Note that the first paragraph of the specification does not reference these applications (for example, the relationship between the current application and application 13/072,787).

Therefore, the petition fails to meet the required conditions to be accorded special status under the accelerated examination procedure.

DECISION

For the above-stated reasons, the petition is dismissed. The application will therefore be taken up by the examiner in its regular turn.

Petitioner is given a single opportunity to perfect the petition. Any request for reconsideration of this decision must be submitted within 1 (one) month or 30 (thirty) days, whichever is longer, (no extension of time under 37 CFR 1.136(a)) from the date of this decision in order to be considered timely. Any request for reconsideration must address the deficiencies indicated above.

Petitioner is reminded that, upon granting of the special status of the application on request for reconsideration, the application will be processed expeditiously. However, due to the dismissal of the instant petition, examination may not be completed within twelve months of the filing date of the application.

Any inquiry regarding this decision should be directed to Christine Tierney, Quality Assurance Specialist, at (571) 272-1055.

/Christine Tierney/

Christine Tierney
Quality Assurance Specialist
Technology Center 1700

UNITED STATES PATENT AND TRADEMARK OFFICE

UNITED STATES DEPARTMENT OF COMMERCE
United States Patent and Trademark Office
Address: COMMISSIONER FOR PATENTS
P.O. Box 1450
Alexandria, Virginia 22313-1450
www.uspto.gov

APPLICATION NO.	FILING DATE	FIRST NAMED INVENTOR	ATTORNEY DOCKET NO.	CONFIRMATION NO.
13/164,007	06/20/2011	Marcos GONZALEZ	10020-002US	1990

95248 7590 10/05/2011
Northern Virginia Law and Technology Services, LLC
1934 Old Gallows Rd
Suite 350
Vienna, VA 22182

EXAMINER
MENON, KRISHNAN S

ART UNIT	PAPER NUMBER
1777	

MAIL DATE	DELIVERY MODE
10/05/2011	PAPER

Please find below and/or attached an Office communication concerning this application or proceeding.

The time period for reply, if any, is set in the attached communication.

UNITED STATES PATENT AND TRADEMARK OFFICE

Commissioner for Patents
United States Patent and Trademark Office
P.O. Box 1450
Alexandria, VA 22313-1450
www.uspto.gov

OCT 05 2011 CST

In re application of Marcos Gonzalez et al Serial No. 13/164,007 Filed: June 20, 2011 For: HIGH-EFFICIENCY BIOREACTOR AND METHOD OF USE THEREOF	: : : : : : :	DECISION ON PETITION TO MAKE SPECIAL

This is a decision on the Request for Reconsideration of Petition to Make Special under the Accelerated Examination Program filed on September 5, 2011 to make the above-identified application special.

The petition to make the application special is **GRANTED.**

The application is eligible for accelerated examination and the petition complies with the conditions for granting the application special status pursuant to the "Change to Practice for Petitions in Patent Applications to Make Special and for Accelerated Examination" published June 26, 2006, in the Federal Register. (71 Fed. Reg. 36323).

The prosecution of the instant application will be conducted expeditiously according to the following guidelines.

1. The application will be docketed to an examiner and taken up for action within two weeks of the date of this decision.

2. Restriction Practice:
   If the examiner determines that the claims are not directed to a single invention, a telephone request to elect one single invention will be made pursuant to MPEP 812.01. As a prerequisite to the grant of this petition, the applicant has agreed to make an oral election, by telephone, without traverse. If the applicant refuses to make an election without traverse, or the examiner cannot reach the applicant after a reasonable effort, the examiner will treat the first claimed invention (invention defined by claim 1) as having being constructively elected without traverse for examination.

3. Office action:
   If it is determined that, after appropriate consultation, there is a potential rejection or any other issue to be addressed, the examiner will telephone the applicant and arrange an interview to discuss and resolve the issue. An Office action, other than a Notice of Allowance and Fee(s) Due (Notice of Allowance), will not be issued unless either: 1) an interview was conducted but did not result in agreed to action that places the application in condition for allowance, or, 2) a determination is made that an interview would be unlikely to result in the application being placed in condition for allowance, and 3) an internal conference has been held to review any rejection of any claim.

4. Time for Reply:
   An Office action other than a Notice of Allowance or a final Office action will set a shortened statutory period of one month or thirty days, whichever is longer, for reply with no extension of time available under 37 CFR 1.136(a). Failure to timely file a reply within this non-extendible period for reply will result in the abandonment of the application.

5. Reply by Applicant:
   A timely reply to an Office action other than the Notice of Allowance must be submitted electronically via EFS or EFS-web and limited to addressing the rejections, objections and requirement made. Any amendment that attempts to: 1) add claims which would result in more than three pending independent claims or more than twenty pending total claims; 2) present claims not encompassed by the pre-examination search or an updated accelerated examination support document; or 3) present claims that are directed a non-elected invention or an invention other than that previously claimed and examined in the application, will be treated as not fully responsive and will not be entered.

   For any amendment to the claims (including any new claim) that is not encompassed by the accelerated examination support document, applicant must provide an updated accelerated examination support document that encompasses the amended or new claims at the time of filing of the amendment.

   To proceed expeditiously with the examination, it is recommended that a reply with amendments made to any claim or with any new claim being added be accompanied by an updated accelerated examination support document or a statement explaining how the amended or new claim is supported by the original accelerated examination support document.

6. Information Disclosure Statement (IDS):
   Any IDS filed during prosecution must be submitted electronically via EFS or EFS-web, accompanied by an updated accelerated examination support document, and be in compliance with 37 CFR 1.97 and 1.98.

7. Post-Allowance Processing:
   To expedite processing of the allowed application into a patent, the applicant must: 1) pay the required fees within one month of the date of the Notice of Allowance, and 2) not file any post allowance papers not required by the Office. In no event may the issue fee be paid and accepted later than three months from the date of the Notice of Allowance.

8. After-Final and Appeal Procedures:
   To expedite prosecution, after receiving the final Office action, applicant must: 1) promptly file a notice of appeal, an appeal brief and appeal fees; and 2) not request a pre-appeal brief conference.

   Any amendment, affidavit or other evidence filed after final Office action must comply with applicable rules and the requirements outlined in numbered paragraphs 5 and 6 above.

   On appeal, the application will proceed according to normal appeal procedures. After appeal, the application will again be treated special.

9. Proceedings Outside the Normal Examination Process:
   If the application becomes involved in a proceeding that is outside the normal examination process (e.g., a secrecy order, national security review, interference proceeding, petitions under 37 CFR 1.181, 182 or 183), the application will be treated special before and after such proceeding.

10. Final Disposition:
    The twelve month goal of this accelerated examination procedure ends with a final disposition. The mailing of a final Office action, a Notice of Allowance, the filing of a Notice of Appeal, or the filing of a Request for Continued Examination (RCE) is the final disposition.

If, during prosecution, a paper is not filed electronically using EFS-web, a reply is filed but is not fully responsive, the application is involved in an appeal, or a proceeding outside normal examination process, the application will still be examined expeditiously, however, the final disposition may occur more than twelve months from the filing of the application.

Any inquiry regarding this decision should be directed to Christine Tierney, Quality Assurance Specialist, at (571) 272-1055.

/Christine Tierney/

Christine Tierney
Quality Assurance Specialist
Technology Center 1700

Doc Code: PET.GREEN
Document Description: Petition for Green Tech Pilot

PTO/SB/420 (03-11)

PETITION TO MAKE SPECIAL UNDER THE GREEN TECHNOLOGY PILOT PROGRAM

Attorney Docket Number: 30020-236002	Application Number (if known): Not yet assigned	Filing date: Herewith

First Named Inventor: Gregory L. Snitchler

Title: GENERATOR WITH FERROMAGNETIC TEETH

APPLICANT HEREBY REQUESTS TO PARTICIPATE IN THE GREEN TECHNOLOGY PILOT PROGRAM FOR THE ABOVE-IDENTIFIED APPLICATION. See Instruction Sheet on page 2.

This petition must be timely filed electronically using the USPTO electronic filing system, EFS-Web.

1. By filing this petition:

   Applicant is requesting early publication: Applicant hereby requests early publication under 37 CFR 1.219 and the publication fee set forth in 37 CFR 1.18(d) accompanies this request.

2. By filing this petition: applicant is agreeing to make an election without traverse in a telephonic interview and elect an invention that meets the eligibility requirements for the Green Technology Pilot Program, if the Office determines that the claims are not obviously directed to a single invention. See Instruction Sheet.

3. This request is accompanied by statements of special status for the eligibility requirement.

4. The application contains no more than three (3) independent claims and twenty (20) total claims.

5. The application does not contain any multiple dependent claims.

6. Other attachments: Continuation application papers

Signature Kelly M. McGlashen	Date June 20, 2011
Name (Print/Typed) Kelly M. McGlashen	Registration Number 60,927

Note: *Signatures of all the inventors or assignees of record of the entire interest or their representative(s) are required in accordance with 37 CFR 1.33 and 11.18. Please see 37 CFR 1.4(d) for the form of the signature. If necessary, submit multiple forms for more than one signature, see below*.*

☐ *Total of 1 forms are submitted.

If you need assistance in completing the form, call 1-800-PTO-9199 and select option 2.

Attorney Docket No.: 30020-236002
Client Ref. No.: AMSC-890US2

IN THE UNITED STATES PATENT AND TRADEMARK OFFICE

Applicant	: Gregory L. Snitchler, et al.	Art Unit	: Not yet assigned
Serial No.	: Not yet assigned	Examiner	: Not yet assigned
Filed	: Herewith	Conf. No.	: Not yet assigned
Title	: GENERATOR WITH FERROMAGNETIC TEETH		

MAIL STOP PETITION
Commissioner for Patents
P.O. Box 1450
Alexandria, VA 22313-1450

STATEMENT OF SPECIAL STATUS FOR ELIGIBILITY REQUIREMENT

Applicant requests that this application be made special pursuant to the Pilot Program for Green Technologies as set forth in the Federal Register.[1]

The invention is believed to be eligible for the Pilot Program because of its material contribution to the development of renewable energy resources, specifically to the generation of electricity by wind. In particular, the application includes claims directed to a wind turbine including a rotating electrical machine. The claimed rotating electrical machine in a wind turbine is neither speculative nor hypothetical.

The subject matter of the application is a way to reduce the overall cost of a wind turbine that incorporates a generator having superconducting stator windings. This generator, and its associated hardware, account for as much as one third of the overall cost of a wind turbine.

The assignee of this application is the American Superconductor Corporation. Through its wholly owned subsidiary, Windtec, AMSC has grown to become a key player in the wind energy industry. Applicant encloses for the Examiner's consideration a print-out of AMSC's wind energy page on its web site at www.amsc.com.

In a recent address given in Seoul, President Obama referred to the assignee of this application as follows:

[1] 74 Fed. Reg. 234 (December 8, 2009), page 64666 et seq., and 75 Fed. Reg. 98 (May 21, 2010).

> "For example, if we can increase our exports to Asia Pacific nations by just 5%, we can increase the number of American jobs supported by these exports by hundreds of thousands. This is already happening with businesses like American Superconductor Corporation, an energy technology startup based in Massachusetts that's been providing wind power and smart grid systems to countries like China, Korea, and India. By doing so, it's added more than 100 jobs over the last few years."

The end user in this case is by no means "hypothetical." Thus, there is no question that the assignee is heavily invested in wind energy. The only remaining question is whether or not the specific subject matter of this application provides a material contribution to wind energy.

To understand why this subject matter materially contributes to the development of wind energy, it is useful to consider two strands of technology and note how they come together in the context of wind turbines.

Geared and direct-drive wind turbines

The first strand of technology involves the operating frequency of a wind turbine, i.e. what frequency is the AC waveform the wind turbine actually generates.

There are generally two kinds of wind turbine: geared turbines and direct-drive turbines. Geared turbines have high operating frequencies, whereas direct-drive turbines have low operating frequencies.

In a geared turbine, the operating frequency is close to line frequency, around 60 Hz. Since the blades themselves do not spin at anywhere near 60 Hz, one typically connects the main shaft to a gearbox to raise the operating frequency. A gearbox, however, is quite complex and prone to failure. For off-shore wind turbines supported hundreds of feet above the sea, gearbox failures are expensive. Moreover, depending on the location, there may be extended periods during which it is not possible to access off-shore sites.

To avoid the reliability problems that arise with gearboxes, one can use a "direct-drive" wind turbine. In a direct-drive wind turbine, there is no gearbox. A byproduct of

not having a gearbox is that the operating frequency is much lower, on the order of 0.2 Hz. To raise this to line frequency, one uses an electrical device called a "full converter".

Magnetic flux losses in wind turbines

The second strand of technology involves losses due to magnetic flux in the stator of a wind turbine.

In the stator of a wind turbine, the windings are nestled between teeth. These windings carry a time-varying current, which in turn generates a time-varying magnetic field. To the extent the teeth are conductive, these time-varying magnetic fields will induce current on the teeth.

In conventional machines, it is useful to make the teeth out of a high mu material to provide a high-density flux path. A good inexpensive choice of material, at least for non-superconducting windings, is iron. However, iron is a conductor. As a result current will be induced in the iron. Because iron is a poor conductor, these eddy currents cause heating. In a non-superconducting machine, one simply tolerates this heat.

More sophisticated solutions are known to reduce these eddy currents. For example, it is known to use stainless steel laminated teeth, or composite teeth in conjunction with Litz wire. But these solutions are expensive.

Applicant's contribution to wind turbine technology

The inventors have recognized that in direct-drive wind turbines, the lower operating frequency would mean that the losses in the teeth would also be lower. The inventors took advantage of this observation by reconsidering the conventional wisdom that a superconducting wind turbine would need expensive composite teeth to reduce magnetic losses. The inventors then found that by arranging the teeth in a particular way, one could reduce the losses in a superconducting wind turbine to the point where ferromagnetic materials could once again be used in the stator.

As a result of the inventors' contribution to the wind energy arts, it is now possible to have a direct-drive wind turbine, or for that matter any wind-turbine with a

low enough operating frequency, that enjoys the advantages of superconducting windings but for a much lower cost.

Discussion of wind energy in specification

The background section opens with a discussion of how a wind turbine uses rotating electrical machines to convert wind energy into usable power.

The summary of the invention, at paragraph 9, makes the point that the machine recited in the claim is particularly suited for wind turbines, especially direct-drive wind turbines, because of the low operating frequency. The summary makes the point that there is a synergistic effect between the low frequency output of a direct-drive wind turbine and the lower losses inherent in such a turbine that allows the use of inexpensive ferromagnetic material even when the generator is a superconducting machine.

The detailed description opens with a discussion of the generator in FIG. 1 being used in a wind turbine. Paragraph 48-50 refer again to operation at low frequencies consistent with the frequencies found in direct-drive wind turbines.

As noted in paragraph 57, conventional structures are not described or recited in the claims. It is for this reason that neither the specification nor the claims go into great detail on the remaining portions of a wind harvesting device, such as the tower, the blades, the cabling, and the nacelle, since a discussion of those features is not needed to understand the subject matter of the invention. However, it is apparent that the claimed invention has significant applications in the harvesting of wind power.

Claims 1-19 recite, in their preambles, a rotating electrical machine. As indicated by the background section, the rotating electrical machine accounts for a large fraction of the cost of a wind turbine. Claim 20 specifically recites a wind turbine including the rotating electrical machine. The subject matter of the disclosure and that recited in the claims is directed to a way to reduce the overall cost of a wind turbine by configuring the stator teeth in such a way as to reduce magnetic losses, thereby permitting the use of less expensive iron teeth. As a result, wind turbines employing generators having such teeth

will enjoy the efficiency associated with superconducting windings at a significantly reduced cost. The subject matter recited in the claims therefore plays a material role in the development of renewable energy resources. Accordingly, Applicant requests that examination be accelerated under the Pilot Program.

Pursuant to the requirements of the Pilot Program, please apply the $300 publication fee to Deposit Account No. 50-4189, referencing attorney docket no. 30020-236002.

Respectfully submitted,

Date: 6/20/2011

Kelly M. McGlashen
Reg. No. 60,927

Customer No. 80841
Occhiuti Rohlicek & Tsao LLP
10 Fawcett Street
Cambridge, MA 02138
Telephone: (617) 500-2522
Facsimile: (617) 500-2499

AIAA 80-9083R

High-Power-Density Superconducting Generator

B. B. Gamble* and T. A. Keim*
General Electric Company, Schenectady, N. Y.

The application of superconductors to the field windings of synchronous ac generators has been the subject of considerable development effort over the past decade. Machines and/or components have been built and tested in more than half a dozen countries. This paper considers an airborne high-power-density superconducting generator under construction at the authors' company. The unique requirements of this application include high power density, fast startup capability, and high terminal voltage. As a consequence, the design approach is quite different from that of any other generator. The significant design constraints and the configuration of the generator under construction are reviewed.

Development Objective

THE U.S. Air Force has sponsored research and development programs in high-power-density generators in the multimegawatt power range for airbone applications. This work has considered MHD, coventional synchronous ac generators, permanent magnet generators, and superconducting ac generators. The intensity of the magnetic fields possible through the use of superconductors in the field winding of a synchronous generator offers the potential for higher power density in ratings of interest than may be achievable with alternate generators.[1]

The development described in this paper began in November 1976 with the objective of incorporating new techniques and materials in the design of an airborne, 20 MW high-speed superconducting generator. The generator will be developed, tested under no-load conditions, and then will be available for testing under load at the Air Force Compressor Research Facility at Wright-Patterson Air Force Base.

Superconducting Generators

Superconductivity is the total absence of ohmic resistance in certain materials in the temperature range of liquid helium. Advancements in practical engineering superconductors such as multifilamentary niobium-titanium in a copper matrix in the 1960s offered the opportunity to consider their use in the field windings of synchronous ac machines. The first synchronous generator with a rotating liquid-helium-cooled superconducting field was tested at MIT in 1969.[2] Since then, work on superconducting ac generators has been conducted in the United States, Europe, USSR, and Japan.

The preferred configuration for a superconducting synchronous ac generator consists of a rotating field wound with superconductor. Typically, the stator is constructed with noncryogenic conductors since, unlike the rotor field, it is subjected to an ac magnetic field which would produce prohibitively high losses in superconductors. (High-field, Type II superconductors are lossless only in a dc magnetic field.) The high fields and high magnetomotive force levels possible with a superconducting winding negate the requirement for iron teeth to serve as flux paths in the stator. The removal of iron teeth offers the potential for increased copper packing in the armature. In a ground-based application, the lossless rotor field winding and the increased copper packing in the stator offer the potential for improved efficiency. In the presently considered airborne application, these design features offer the potential for increased power density.

Successful operation of a superconducting winding requires that the winding be cooled to a temperature at or near the normal boiling point of liquid helium [4.2 K (−452°F)]. The only practical coolant for this temperature range is helium. The economical application of helium cooling requires that the field winding region be insulated from conduction and convection by vacuum. The solid members which must span the temperature range to support or service the cold region are carefully designed to minimize conduction, and are further cooled by a stream of boil-off vapor flowing along the solid member in the direction opposite to the heat conduction. A reflective thermal radiation shield is provided in the evacuated space. The need to incorporate these standard cryogenic engineering features into a rotating field winding has been met in this machine by a compact and disassemblable design.

The losses in a Type II superconductor under time-varying conditions may cause an objectionable load on the cooling system. In extreme cases, the loss can be so large as to cause a temperature rise sufficient to result in a loss of superconductivity. This problem is especially important in a superconducting generator, as time-varying magnetic fields are produced not only by variation in operating conditions but also by armature phase imbalances or spatial and time harmonics due to armature currents. The outer members of superconducting generator rotors are typically made of relatively thick sections of materials with good electrical conductivity. Such components support eddy currents which serve to screen the field winding from time-varying armature effects.

Design Considerations for the Airborne Applications

The technical goals which are summarized in Table 1 are quite different from those typically required for central power station designs. The intended prime mover is a lightweight gas turbine which drives the generator without benefit of a clutch or gear. The generator is to produce 20 MW of electrical power and deliver it to a rectifier at the voltage required to result in 40 kV dc to the Air Force load.

The voltage is quite high for a generator of this size and is more easily achievable when considered for short lifetimes. A design life at voltage of 100 h was selected to allow specification of an armature insulation system. At a run time of 5 min per mission this results in a design life of 1200 missions. Even with this limited life requirement, the insulation system is a critical area in armature design and has been the subject of component development testing.

The specific weight requirement for a dry generator, not including lubricant or coolant, is 0.045 kg/kW (0.1 lb/kW). This goal can be achieved by operating both the rotor and the

Presented as Paper 80-9083 at the 15th Intersociety Energy Conversion Engineering Conference, Seattle, Wash., Aug. 18-22, 1980; submitted Aug. 12, 1980; revision received Oct. 2, 1981. Copyright © American Institute of Aeronautics and Astronautics, Inc., 1980. All rights reserved.

*Mechanical Engineer, Corporate Research and Development.

Table 1 Technical goals

Characteristic	Goal
Output power	20 MW
Voltage	40 kV (from rectifier)
Speed	5500-6800 rpm
Moment of inertia	13.6 kg-m^2 (10 slug-ft^2)
Rotor tip speed	152 m/s (500 ft/s)
Ramping rate	1 s to full field current
Torsional acceleration	1 s to full speed
Specific weight	0.045 kg/kW (0.1 lb/kW)
Run time	5 min continuous or pulsed (5 s on, 5 s off)

stator at high current densities. The achievement of these high current densities has required component development.

The characteristics of the system require sudden startup capability. The viscous losses in the turbine are too high to allow the design speed to be maintained when the generator is not in use. As will be discussed in later sections, the generator includes an outer conducting shell, called an environmental shield, which shields the aircraft from the intense magnetic field of the generator. This shield is ineffective at very low speeds, requiring de-excitation of the generator when the rotor is stopped or run at idle. It is desired to start the generator in 1 s. The field must therefore be ramped in 1 s during spin-up of the rotor. This startup requirement coupled with the need for high fields and current density requires the design of an advanced superconducting field winding.

It should be noted that rapid cooldown to liquid helium temperature is not an explicit goal. It is presumed that cooldown to liquid helium temperature is performed prior to the mission (possibly from a partially precooled standby condition). The liquid helium necessary to maintain the superconducting state is carried on board the aircraft in a suitable vessel. The repetition rate of the pulsed duty cycle—5 s on and 5 s off—does impose a significant series of upsets to the thermal state of the rotor. The superconducting coils in this generator achieve temperature equilibrium in times that are short compared to a load cycle, but it is difficult to assure that the helium within the winding can switch between the stable state at idle and the stable state at operating speed in such short times. The electrical transient losses and the fluid irreversibilities associated with the repeated speed changes do combine to cause a substantial increase in helium vapor evolution during pulsed operation. The helium flow circuit must be capable of maintaining the rotor helium inventory throughout such an event. The helium required for this short period of operation will probably be the principal determinant of the total amount of helium required for a mission. In this simple application, it is anticipated that spent helium will be vented overboard.

Configuration Selection

The unusual configuration of this generator has been selected to meet ambitious performance goals. The intent of the goals, and of the generator design, is to provide the lightest possible system capable of supplying the specified power.

The speed is specified to permit the generator to be driven directly from a gas turbine, thus avoiding the weight and complication of the speed-changing gear. To achieve maximum power per unit weight, a large diameter near the centrifugal stress limit has been selected. At any rotational speed, an increase in rotor and stator diameters contributes to increased output two ways: the electromagnetic force acts at a large radius, increasing torque; and the magnitudes of the interacting magnetic fields are increased, resulting in an increase in magnetic force.

The generator supplies power through a full-wave rectifier, so selection of pole number and hence frequency does not have a strong system impact. At a fixed radius, increasing the pole number results in a reduction in the mass and volume of th end windings and a reduction in the size of the ferromagnetic or conductive stator shield. These benefits must be traded off against the reduced magnetic coupling between the field and armature.

A closely related issue is the selection between ferromagnetic and conductive stator shields. Ferromagnetic shielding provides high efficiency at the expense of relatively high weight. The shield weight decreases relatively rapidly with increasing pole number. Ferromagnetic shielding also contributes to an increase in mutual flux for any field and armature geometry, although the importance of the effect is diminished in short machines. Conductive shielding is relatively light, but relatively less efficient. Shield weight tends to be a weaker function of pole number than in the ferromagnetic case.

In this particular application, the weight of the ferromagnetic shield is a substantial impediment in the achievement of weight goals. The penalty is prohibitive for two- and four-pole geometries, but might be acceptable at six or eight poles. Conductive shielding is a reasonable design choice for this generator. Conductive shielding makes it possible to consider a four-pole generator with the attendant improved mutual inductance. Four-pole designs are substantially simpler than those for higher pole numbers as fewer and simpler parts are required. The loss in the conductive shield is relatively unimportant. The shield must be carefully cooled, but the impact on cooling system weight is justified by reduced generator weight.

The stator cooling system proposed for airborne application employs the sensible and latent heat of a tank of water. Water drawn from the tank is circulated through the generator, where it is heated above the normal boiling point. Boiling is prevented within the generator by keeping the fluid under pressure. After it leaves the generator, the fluid is throttled back into the tank. Some of the liquid is converted to vapor in the throttling process. This vapor is vented overboard, and the liquid is mixed with that remaining in the tank and recirculated.

Since water is employed as the heat sink in this system, it is convenient to use the same water as a primary coolant. Magnetic fields within the generator are intense enough that virtually all of the metallic parts of the stator require cooling. The complexity of this requirement is minimized by using nonmetallic components where possible. But even so, coolant is supplied to the case, end plates, bearing housings, and armature. Heating in these peripheral parts is generally diffuse, so the cooling design is not demanding. But the areas involved are large, so the increase in mechanical complexity is significant. The total of losses in these parts is expected to be about 490 kW.

The armature conductors are direct cooled; each conductor is a hollow tube with coolant flowing inside. Supplying coolant to these conductors is inconvenient but the results in terms of overall current density and power density are worth the effort. To minimize the hydraulic complexity of the armature, the number of conductors should be kept to a minimum. This suggests that the conductor cross section should be as large as possible. As a result, eddy-current loss densities in direct-cooled conductors tend to be relatively high in absolute terms, although still reasonable when compared to the transport current loss density.

By far the biggest part of the total of machine losses occurs in the armature winding. The loss density in the armature is very high, but the cooling arrangement is clearly defined and well characterized. The temperature rise of a coil at rated losses with rated mass flow has been verified by experiment, so there is every reason to expect that the cooling system will readily handle armature losses.

The generator is intended to be connected directly to a rectifier supplying the load at 40 kV. This requirement is imposed to keep the system weight down by avoiding a rec-

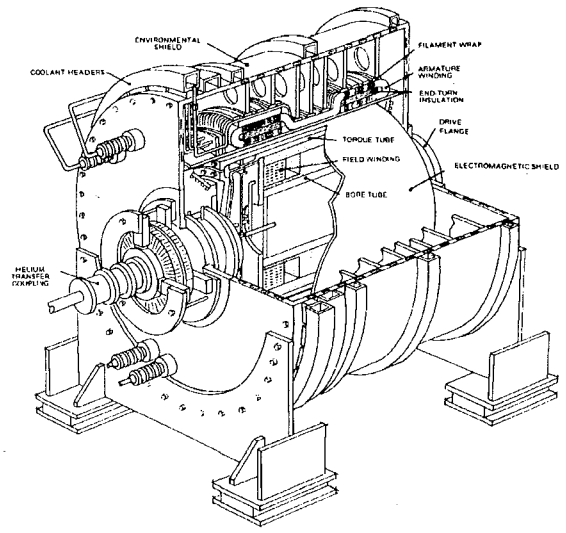

Fig. 1 20 MW superconducting generator.

Table 2 Generator electrical summary

Power	20 MW (into a rectifier)
Number of poles	4
Number of phases	3
Frequency	200 Hz
Rotor	
Speed	6000 rpm
Bearing span	0.81 m (32 in.)
Outer diameter	0.54 m (21 in.)
Field winding outer radius	0.23 m (9 in.)
Modules/pole	1
Module cross section	0.0724 × 0.0747 m (2.85 × 2.94 in.)
Straight length	0.15 m (6 in.)
Turns/pole	881
Module current density	15,000 A/cm^2
Design current	921 A
Inductance	0.61 H
Armature	
Annular region radii	0.28-0.30 m (11-12 in.)
Straight length	0.15 m (6 in.)
Annular current density	1760 A/cm^2
Coils/phase	56
Turns/coil	5½ and 6½ (average of 6)
Shield radius	0.52 m (20 in.)
Design and base current	408 A
Design voltage	17.1 kV rms
Open circuit voltage	22.3 kV rms (design excitation)
Base voltage for reactances	19.1 kV rms
Reactances	
(46.8 Ω base, 23.4 MV·A)	
Synchronous	0.56 p.u.
Transient	0.50 p.u.
Subtransient	0.26 p.u.
Losses	
Armature joule heating	990 kW
Armature eddy current	440 kW
Case eddy current	488 kW

tifier transformer, so it is important to achieve the required terminal voltage without incurring an offsetting generator weight penalty. This can be achieved by employing a graded-voltage connection order which limits voltage between adjacent conductors to moderate values. Even with limited voltage gradient construction, it is impractical to keep electric stress below the corona-start values for the insulating materials employed. Instead, materials resistant to corona degradation will be employed and design life will be limited to 100 h at operating voltage.

The high magnetic flux density and high current density in this generator create high mechanical stresses. Running stresses are manageable by careful design, and the fatigue duty is ameliorated by limited design life.

Figure 1 presents a schematic of the superconducting generator, and its characteristics are summarized in Table 2.

Rotor Configuration

The design of any large high-current-density superconducting winding is a challenging task. The entire length of conductor must be firmly supported against the high magnetic forces generated by the superconducting winding. Conductor motion of a fraction of a mil under the influence of such forces can cause heating sufficient to cause loss of superconductivity. In a generator, the winding also experiences substantial centrifugal forces, which also influence the need for adequate conductor support. The design philosophy adopted to address these considerations is based on a very simple coil geometry: a racetrack plan shape with a rectangular cross section. This geometry allows a uniform and tightly wound coil module which is epoxy impregnated to provide uniform support.

The rapid excitation requirement places a further major demand on the winding design. Time-varying magnetic fields induce eddy currents in the conductor stabilizing matrix and hysteretic losses in the superconducting filaments. In fully epoxy-impregnated winding modules, the resulting temperature rise of the conductor with respect to the coolant would be prohibitive at the required excitation rate. The rapid spin-up requirement further complicates coil design by introducing coolant flow and thermodynamic transients coincident with the transient heating.

This program has considered two coil designs which allow rapid excitation while retaining the mechanical support of epoxy impregnation. The initially selected approach consists of utilizing a Nb_3Sn cable superconductor. This cabled conductor has substantially lower transient losses than the monolithic rectangular NbTi conductor used in previous coils. The advantage of Nb_3Sn is its relatively high-temperature capability which, owing to the third-power dependence of specific heat with temperature, results in a substantially increased loss tolerance. Use of Nb_3Sn requires the development and verification of epoxy-impregnation techniques for the cable conductor and for conductors with mineral as opposed to organic strand insulation.

The second approach uses a more conventional NbTi compacted cable in a winding ventilated by cooling channels. The cable configuration again reduces losses as compared to a monolithic structure, and the ventilation of the module both increases its apparent heat capacity and provides for internal cooling. This approach requires the development of impregnation techniques for the cable conductor and the extension of ventilated-winding practice to noncylindrical coils. This second approach has been selected because its implementation is consistent with the generator development schedule.

A field winding configuration was selected that uses one winding module per pole to minimize the number of interfaces where sliding can occur between the support structure and the field winding modules. This also simplifies the design of the support structure and reduces the number of rotor parts.

These modules are supported in a glass fiber and epoxy (G11-CR) support structure. This support structure includes slots and channels to allow liquid helium to cool the field winding modules and to provide liquid helium storage in the rotor for transients.

The support structure is contained between an inner bore tube and an outer torque tube, both of which are made of Inconel 718. The assembly of these components is made with thermal interference to preload the structure and limit relative motion due to centrifugal and electromagnetic loading. The assembly consisting of bore tube, support structure, and torque tube comprises the helium-temperature component of the machine. This low-temperature assembly is cantilevered

from the collector-end shaft. The cantilevered design is possible because of the large diameter and short length of this machine. It offers a significant reduction in the complexity of the mechanical design, a reduction in the number of vacuum welds, and a reduction in the heat conducted to the low-temperature region of the rotor. The vacuum welds are all in locations which permit them to be thermally cycled to liquid nitrogen temperature and checked for leaks before they are made inaccessible by subsequent assembly operations.

The torque tube is 10 cm (4 in.) longer at the collector end than the other components of the low-temperature assembly. The end of this torque tube extension is bolted to the collector-end shaft, which operates at or above room temperature. The torque tube extension is the only structural component that spans the range between room temperature and helium temperature. It supports the entire low-temperature assembly. Most of the helium vapor evolved in the winding space flows in close contact with the torque tube extension from the cold end to the warm end. Much of the heat entering the warm end of the torque tube extension is intercepted by this gas stream, and the thermal conduction to the winding space is kept very low.

The inner wall of this torque tube heat exchanger assembly is included in the helium flow circuit assembly. This assembly occupies most of the volume between the low-temperature assembly and the collector-end shaft. This assembly contains the helium inlet plumbing, which enters the machine through the hollow collector-end shaft. It also contains the low-temperature to room-temperature electric current leads, each of which is cooled with a flow of helium vapor in the same manner as the torque tube extension. The flow circuit assembly is a complete free-standing component which can be thermally shocked and leak tested prior to final assembly.

An aluminum thermal radiation shield is installed in the space immediately outside the torque tube. This component is attached to the torque tube extension at a station of intermediate temperature part way along its length. Heat radiated to the shield is conducted to the torque tube extension and transferred to the helium vapor stream.

The outermost member of the rotor is a 1.9 cm (¾ in.) thick aluminum cylinder called the electromagnetic shield. This shield is the only member which attaches to both shafts, so it provides the rotor bending stiffness. The shield and the shafts form the outer vacuum envelope of the rotor. Everything within the rotor which is not filled with helium in one state or another is evacuated. In particular a vacuum exists between the electromagnetic shield and the thermal shield and also between the thermal radiation shield and the low-temperature assembly. The inside of the bore tube and the void volume of the flow circuit assembly are also evacuated.

The electromagnetic shield also serves to carry eddy currents which shield the field winding from asynchronous magnetic fields created by the armature, thus reducing induced-current losses in the windings and other low-temperature components. The heat due to eddy currents in the shield, and the rotor windage losses are removed by an axial flow of air in the relative rotation gap.

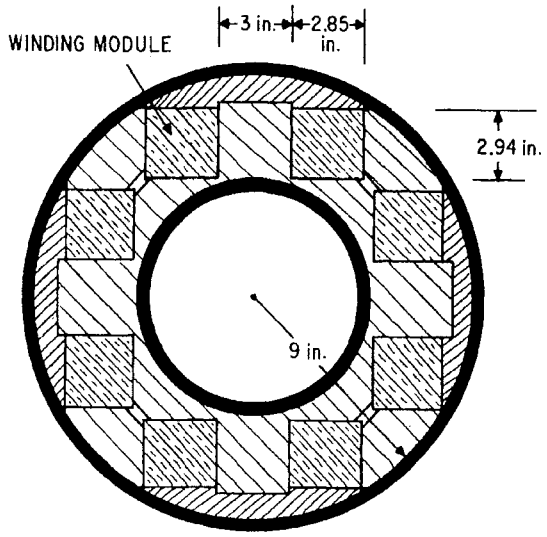

Fig. 2 Field winding configuration.

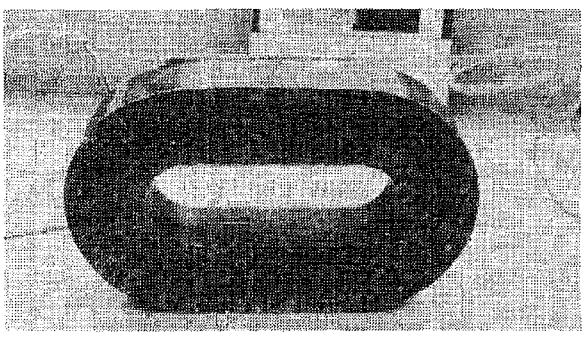

Fig. 3 Racetrack coil module.

Table 3 NbTi superconductor

NbTi compacted cable superconductor	
Number of strands	6
Copper-to-superconductor ratio	1.8/1
Uninsulated strand diameter	0.81 mm (0.032 in.)
Number of filaments per strand	2046
Filament diameter	10.5 μm
Strand twist pitch	1.6 turns/cm (4 turns/in.)
Strand insulation	Heavy formvar
Rutherford cable	
Cable twist pitch	0.4 turn/cm (1 turn/in.)
Cable dimensions	1.78 × 2.84 mm (0.071 × 0.112 in.)
For circular module test	1.75 × 2.56 mm (0.69 × 0.101 in.)
Packing factor for cable in module	84%
Current	15,000 A/cm^2, 921 A

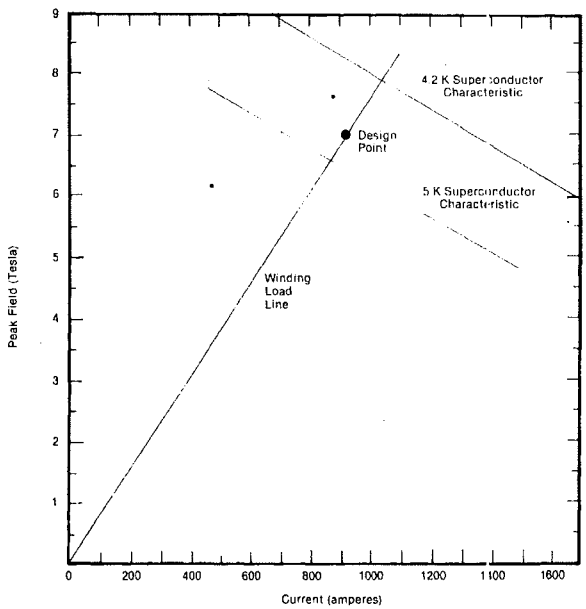

Fig. 4 Predicted winding performance.

The rotor shafts are titanium to provide the required strength at an acceptable weight. The collectors are copper rings cooled by integral fans. Outboard of the collector is the helium transfer coupling, which comprises the seal assembly for the helium streams.

Figure 2 presents a cross section of the low-temperature region of the rotor and Fig. 3 is a photograph of one of the four winding modules. The generator has been designed for a field winding current density of 15,000 A/cm^2 based on the area of the winding modules which results in a peak field of 7.1 T on the winding module bore at the end turn.

Field Winding Performance

The NbTi superconductor was selected to limit the losses associated with a 1 s ramp to the design condition (a magnetic field rate of change of 7.1 T/s). Alternative NbTi superconductor configurations were considered including cable, compacted cable, aspected monolith, and mixed matrix. Table 3 summarizes the characteristics of the selected compacted cable. The downward-sloped lines in Fig. 4 describe the performance of this superconductor. The superconductor will exhibit zero resistance for points to the left of these lines for temperatures up to the values listed. The load line for the complete field winding is the upward-sloped line in this figure and the design point is indicated. As can be seen, a superconductor temperature up to 4.8 K will not result in a loss of superconductivity.

The temperature rise of the superconductor with respect to the liquid helium in the rotor is dependent on the thickness and thermal conductivity of the insulation (polyvinyl-formal), epoxy, and glass between the conductor and the fluid; the convective heat-transfer coefficient to the supercritical helium in the channel; and the mass flow rate of helium through the channel.

The predicted losses for a 1 s ramp to 7.1 T correspond to a peak heat rate of 75 mW/cm^3 in the modules. The winding is constructed with 0.95 cm wide by 0.025 cm thick cooling channels after every other layer in the racetrack winding module. The winding is designed with a porosity of 5%. The resulting peak surface heat flux in the cooling channels is approximately 20 mW/cm^2. The calculated thermal conductance through the wire insulation and epoxy-glass structure is 47 mW/cm^2·K. The predicted temperature rise of the superconductor with respect to the liquid is 0.43 K.

The cooling channels in the modules are oriented in a generally radial direction. The fluid in each channel is heated during ramping, causing a radially inward flow due to density change and centrifugal acceleration. Calculation indicates the film temperature rise and the temperature rise of the helium as it flows through the channel are small compared to the 0.43 K rise through the epoxy and insulation.

Helium Flow Circuit

The function of the helium flow circuit is to remove ramping and other winding losses and to intercept heat conducted and radiated to the low-temperature region of the rotor. The winding modules are cooled by helium in the slots and channels of the support structure. A liquid-vapor interface occurs near the radially innermost winding module surfaces. Therefore, the majority of the winding is in contact with subcooled and supercritical liquid. The components of the flow circuit are discussed in Ref. 3.

The temperature at the surface of the winding pool is 3.4 K and temperature at the outer surface of the winding pool is approximately 4.4 K, if it is assumed that the temperature distribution in the winding pool corresponds to isentropic compression. The temperature of a major part of the winding pool will be lower than that of the 4.2 K liquid supplied from the dewar. The superconductor temperature following a 1 s ramp to design current will therefore be less than the 4.8 K required to maintain superconductivity. The calculated helium demand is 0.6 g/s or 17.3 liquid liters/h.

Stator Configuration

The armature consists of 56 coils in each of the three phases. The coils (Fig. 5) are made up of six turns of hollow conductor cooled by high-velocity, subcooled water. The coil end turns are in two layers and are of a helical configuration.

The armature is built up around a bore tube. These coils are stacked around the bore tube to form a single-layer winding. Insulating wedges are inserted between coil sides. The coils are strapped onto the bore tube with bands of continuous filament glass and epoxy. Sheet insulation is worked into the space between layers of conductors in the end turns. A layer of solid insulation is placed over the end turns on the connection end.

The coil leads, which leave the coils at one end of the straight sides, are brought axially over the end turn insulation to a location at the end of the machine. Selected pairs of leads are joined in a braze fitting to create a single circuit per phase. The braze fitting which forms the electrical connection also serves as a connector for cooling fluid, which is brought to and from the generator by Kevlar-jacketed Teflon hoses.

The major structural members of the stator are the armature winding, the outer case, and the section plates connecting them. The armature is impregnated with epoxy prior

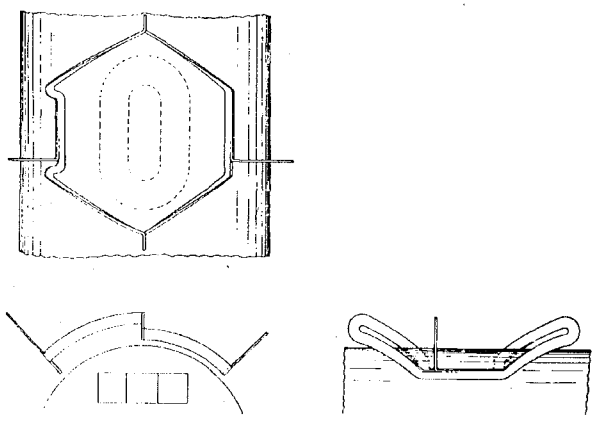

Fig. 5 Six-turn coil.

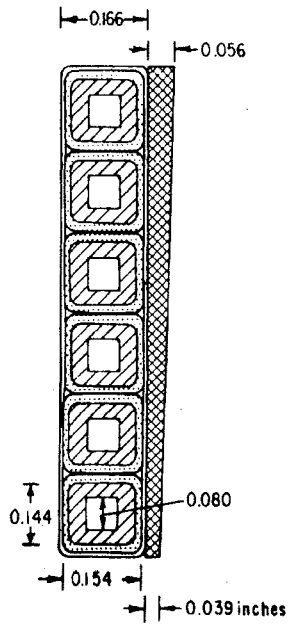

Fig. 6 Coil cross section.

to application of the banding. The bands put the resulting monolithic structure into precompression, so that the structure never experiences tension. The resulting structure contributes substantially to the strength and rigidity of the overall stator. The section plates also contribute to the strength and rigidity of the structure, but their principal function is the transfer of shear loads between the armature and the case. The combined structure has excellent ring mode stiffness because the section plates cause the armature and case to act like beam flanges when subjected to bending deformation.

The design which has been selected is a reasonable compromise between electrical and hydraulic considerations. To achieve the required voltage, 336 turns per phase are required, or 1008 total turns for three phases. Single-turn or half-turn coils would have required a thousand or more electrical connections and a similar number of coolant connections. Six-turn coils reduce this number to 168, which is more manageable. The limitation on the number of turns in a coil is principally hydraulic: the pressure necessary to achieve the required coolant flow becomes excessive. Pressure drop is a strong function of hydraulic diameter, so modifications to increase conductor size simplify the hydraulic design considerably.

Eddy current losses are also a strong function of conductor diameter. Eddy current losses per unit volume of copper in the present design are 127 W/cm^3 at the peak location and 27 W/cm^3 on average. But even at this level, eddy currents do not dominate the loss picture. Conductor cooling in the present design is so good that transport losses of 53 W/cm^3 can be permitted in addition to the eddy current losses. By way of contrast, total losses in other than direct-cooled designs must be held to about 15 W/cm^3, so substantial improvements in transport current density are achieved despite the high eddy current losses. The armature achieves a current density of 1760 A/cm^2 on the armature annulus and 4970 A/cm^2 on the copper area.

In summary, high eddy current loss density is a generic characteristic of direct-cooled conductors, because hydraulic limitations force the selection of relatively large conductors. But this disadvantage is more than compensated for by high current density, which permits use of less conductor resulting in a lighter generator.

Figure 6 is a detailed cross section of one turn of a six-turn coil. The conductor is oxygen-free copper. Conductor insulation is double Dacron-glass. The coil is half-lap wrapped with polyester and glass tape. The wedge adjacent to the coil in Fig. 6 is not part of the coil. Wedges are cut to fit the actual gaps between the coils; the size shown is nominal.

Effective values of the ac magnetic field in the armature on open circuit have been obtained by averaging the field through the volume of the armature. The result is that the conductor experiences, on average, heating equivalent to that from a pulsating field of 0.8 T or a rotating field of 0.56 T. The total eddy current loss on open circuit is expected to be 440 kW.

Conduction losses may be estimated from measured coil resistance of 45.3 mΩ at an average coil temperature of 143°C. Total conduction current loss in the generator at this condition is 990 kW.

Table 4 Flow through the armature

Total mass flow	4.3 kg/s (34,000 lb/h, 68 gal/min)
Mass flow each coil	25.5 g/s (200 lb/h)
Flow area each coil	0.040 cm^2 (0.0062 in.^{2})
Flow velocity	6.4 m/s (21 ft/s)
Hydraulic diameter	2.1 mm (0.084 in.)
Reynolds number	6.5×10^5
Friction factor	0.0077
Length of flow path	11.2 m (441 in.)
Pressure drop	3.4 MPa (490 psi)
Pump power	20.4 kW (27.3 hp)

Table 5 Heat-transfer parameters

P_c/ℓ	5.3 W/cm (13.4 W/in.)
$(P_e/\ell)_{av}$	2.7 W/cm (6.8 W/in.)
$(P_e/\ell)_{pk}$	13 W/cm (33 W/in.)
(A_s/ℓ)	0.74 cm (0.29 in.)
$(P/A_s)_{av}$	11 W/cm^2 (69 W/in.^{2})
$(P/A_s)_{av}$	25 W/cm^2 (158 W/in.^{2})
h	1 W/cm^2 · °C (7 W/in.^{2} · °C)
ΔT_{av}	10°C

Armature Thermal Performance

Table 4 presents a summary of the flow conditions in the armature coils. The entries represent, in order, mass flow for the complete armature, mass flow for each coil, flow area for each coil, flow velocity, dynamic pressure, hydraulic diameter, Reynolds number, Fanning friction factor (including effects of bends), length of flow path, pressure drop across the armature, and isentropic pump power, including a 1.38 MPa (200 psi) throttle drop in series with the armature.

The values in Table 5 are calculated using measured values for conductor dimensions and resistance. The temperature is taken to be 142°C. The symbols represent, in order, joule loss due to transport current per unit length of conductor; average open-circuit eddy current loss per unit length; open-circuit eddy current loss per unit length at the peak field location (inner surface of armature, axial centerline); wetted area per unit length; average conductor-to-fluid heat transfer; conductor-to-fluid heat transfer at the peak location, assuming no thermal conduction along the tube; heat-transfer coefficient; and average conductor-to-fluid temperature drop.

Armature Insulation System

From the standpoint of electric field management, air-gap armatures are fundamentally different from slot-embedded armatures in that there are no naturally occurring radial ground planes. In this generator, that feature is exploited by arranging that adjacent coils be relatively close in electric potential. The resulting design achieves a very substantial terminal voltage without significant sacrifice of the copper packing factor in the armature annulus.

Voltage stresses in locations other than between coils are generally controlled by separation. Another location with significant stresses is the bore tube, which has armature coils at up to line potential on its outside and a semiconducting ground plane on the inside. Full line-to-line voltage appears between layers in the end turns, so the spacing there has been opened to 1.9 cm (3/4 in.) to keep the electrical stress moderate. Other spacings are generally more liberal.

The criteria for selection of insulating materials for this generator are rather unusual because of the specialized requirements of the application. The peak coil temperature (190°C) is within the continuous-duty range of a fairly restricted number of insulating materials, and average working stresses of 15.7-27.6 kV/cm (40-70 V/mil) imply that local stresses with concentrations taken into account are in excess of the corona-start levels of most insulating systems. By selecting a 100 h (1200 mission) design life, it is possible to consider a wide range of insulating materials working above nominal rated temperature and nominal working stress limits.

The bore tube insulator is an epoxy-glass filament winding employing a blend of cycloaliphatic and novalac epoxies. Basic conductor insulation is double polyester glass with a nominal 0.25 cm (10 mil) build. Coils are insulated with a half-lap wrap of Fusa-fab® polyester and glass tape, which cures to a nominal thickness of 0.15 cm (6 mil) per layer. These are both 180°C materials. The wedges between coils are of grade FR-5 glass cloth and epoxy laminate. Insulation in the toroidal region between layers in the end turns is formed by inserting sheets of Nomex-M® paper.

Because of the limited design life, it is practical to run voltage endurance tests to and beyond both rated stress and design life, to permit generation of a reliable voltage endurance curve without resorting to extrapolation. Tests to date yielded no failures in over 5400 h at design voltage and at slightly greater than design stress. These tests will be continued to obtain an estimate of the time of failure, but the information presently available assures that the expected time to failure will be in excess of 10 times operating life.

Summary

A high-power-density superconducting generator design is under construction at the authors' company. The design is intended for an airborne application and is intended to meet goals significantly different from those for most other superconducting generator designs. To achieve the required power density, high-current-density field and armature windings have been developed.

High current density in the rotor field has been achieved through the effective use of superconducting windings. The field winding geometry was selected for manufacturing simplicity and to insure good wire support under centrifugal and electromagnetic loading. The superconductor and the details of the winding construction were selected to allow fast excitation.

The armature design achieves high current density by means of high-velocity water cooling in hollow armature conductors. The high-voltage requirement has been addressed by utilizing a graded insulation scheme, by designing for limited life, and by testing the selected insulation materials.

This generator will demonstrate a substantial improvement in the state-of-the-art of high-power-density generators for airborne applications. Development plans call for the generator to be tested under no-load conditions at the authors' company in 1983. The generator will then be available for ground-based load testing by the Air Force.

Acknowledgment

This work was performed under contract to the Air Force Aero Propulsion Laboratory, Air Force Wright Aeronautical Laboratories, Wright-Patterson Air Force Base, Ohio.

References

[1] Southall, H. L. and Oberly, C. E., "System Considerations for Airborne High Power Superconducting Generators," *IEEE Transactions on Magnetics*, Vol. MAG-15, Jan. 1979, pp. 711-741.

[2] Thullen, P., Dudley, J. C., Greene, D. L., Smith, J. L. Jr., and Woodson, H. H., "An Experimental Alternator with a Superconducting Rotating Field Winding," *IEEE Transactions on Power Apparatus Systems*, Vol. PAS-90, March-April 1971, pp. 611-619.

[3] Gamble, B. B. and Keim, T. A., "A Superconducting Generator Design for Airborne Applications," *Advances in Cryogenic Engineering*, Vol. 25, Plenum Press, New York, 1980, pp. 127-136.

From the AIAA Progress in Astronautics and Aeronautics Series . . .

HEAT TRANSFER WITH THERMAL CONTROL APPLICATIONS—v.39

Edited by M. Michael Yovanovich, University of Waterloo

This volume is concerned with the application of principles of heat transfer to one of the most complex engineering tasks in environmental control, the maintenance of thermal equilibrium in an isolated spacecraft thermal control system have necessitated a wide expansion of knowledge in fields such as surface emission and absorption characteristics, radiative exchange in complicated geometries, thermal contact resistance conduction in heterogeneous media, heat pipe phenomena, etc. The knowledge thus developed in the field of heat transfer, stimulated by the special requirements of spacecraft thermal balance and control, is directly applicable to many other engineering heat transfer projects. The book is recommended, therefore, to the broad community of heat transfer engineers as well as to the more specialized engineering community.

409 pp., 6 x 9, illus., $19.00 Mem. $35.00 List

TO ORDER WRITE: Publications Dept., AIAA, 1290 Avenue of the Americas, New York, N. Y. 10019

UNITED STATES PATENT AND TRADEMARK OFFICE

UNITED STATES DEPARTMENT OF COMMERCE
United States Patent and Trademark Office
Address: COMMISSIONER FOR PATENTS
P.O. Box 1450
Alexandria, Virginia 22313-1450
www.uspto.gov

APPLICATION NO.	FILING DATE	FIRST NAMED INVENTOR	ATTORNEY DOCKET NO.	CONFIRMATION NO.
13/164,023	06/20/2011	Gregory L. Snitchler	30020-236002	1018

80841 7590 07/29/2011
Occhiuti Rohlicek & Tsao LLP
10 Fawcett Street
Cambridge, MA 02138

EXAMINER

ART UNIT	PAPER NUMBER
2834	

NOTIFICATION DATE	DELIVERY MODE
07/29/2011	ELECTRONIC

Please find below and/or attached an Office communication concerning this application or proceeding.

The time period for reply, if any, is set in the attached communication.

Notice of the Office communication was sent electronically on above-indicated "Notification Date" to the following e-mail address(es):

info@ORTPATENT.COM

UNITED STATES PATENT AND TRADEMARK OFFICE

Commissioner for Patents
United States Patent and Trademark Office
P.O. Box 1450
Alexandria, VA 22313-1450
www.uspto.gov

Occhiuti Rohlicek & Tsao LLP
10 Fawcett Street
Cambridge MA 02138

In re Application of	:	
SNITCHLER et al.	:	DECISION ON PETITION
Application No. 13/164,023	:	TO MAKE SPECIAL UNDER
Filed: June 20, 2011	:	THE GREEN TECHNOLOGY
Attorney Docket No. 30020-236002	:	PILOT PROGRAM

This is a decision on the petition under 37 CFR 1.102, filed on June 20, 2011, to make the above-identified application special under the pilot program for applications pertaining to Green Technologies as set forth 74 Federal Register Notice 64666 (December 8, 2009) and amended by 75 Federal Register Notice 28554 (May 21, 2010) and 75 Federal Register Notice 69049 (November 10, 2010).

The petition is **GRANTED**.

A grantable petition to make an application special under 37 CFR 1.102 and the pilot program as set forth in 74 FR 64666 must be directed to a nonprovisional application filed under 35 USC 111(a) or be a national stage entry under 35 USC 371, exclusive of any reissue applications.

In order to qualify for special status, the following requirements must be met. 1) The application must have no more than 3 independent claims and no more than 20 total claims. 2) The application must not contain any multiple dependent claims. 3) The petition must state the basis for seeking special status, i.e., the claimed invention either: A) materially enhances the quality of the environment or B) materially contributes to: i) the discovery or development of renewable energy resources, ii) the more efficient utilization and conservation of energy resources, or iii) greenhouse gas emission reduction. 4) If the disclosure is not clear on its face that the claimed invention materially contributes under category (A) or (B), the petition must be accompanied by a statement by the applicant, assignee, or an attorney/agent registered to practice before the Office explaining how the materiality standard is met. 5) A statement that applicant will agree to make an election without traverse in a telephonic interview if a restriction requirement is made by the examiner. 6) The petition to make special must be filed electronically. 7) The petition must be filed at least one day prior to the date that a first Office Action appears in the Patent Application Information Retrieval (PAIR) system. 8) The petition must be accompanied by a request for early publication in compliance with 37 CFR 1.219 and include the publication fee as set forth in 37 CFR 1.18(d).

The requirement for a fee for consideration of the petition to make special for applications pertaining to Green Technologies has been waived.

The instant petition complies with items 1 – 8 above. Accordingly, the above-identified application has been accorded "special" status.

Telephone inquires concerning this decision should be directed to Colleen Dunn at 571-272-1170.

The application is being forwarded to the appropriate Technology Center Art Unit for action on the merits commensurate with this decision.

Colleen Dunn
Quality Assurance Specialist
Technology Center 2800

PTO/SB/20PCT-EP (05-10)
Approved for use through 01/31/2012. OMB 0651-0058
U.S. Patent and Trademark Office; U. S. DEPARTMENT OF COMMERCE
Under the Paperwork Reduction Act of 1995, no persons are required to respond to a collection of information unless it displays a valid OMB control number.

REQUEST FOR PARTICIPATION IN THE PATENT COOPERATION TREATY - PATENT PROSECUTION HIGHWAY (PCT-PPH) PILOT PROGRAM BETWEEN THE EUROPEAN PATENT OFFICE (EPO) AND THE USPTO

Application No:	13/164,045	Filing date:	June 20, 2011
First Named Inventor:	Ramu S.		
Title of the Invention:	Methods and Apparatuses for Chip-Based DNA Error Reduction		

THIS REQUEST FOR PARTICIPATION IN THE PCT-PPH PILOT PROGRAM ALONG WITH THE REQUIRED DOCUMENTS MUST BE SUBMITTED VIA EFS-WEB. INFORMATION REGARDING EFS-WEB IS AVAILABLE AT HTTP://WWW.USPTO.GOV/EBC/EFS_HELP.HTML

APPLICANT HEREBY REQUESTS PARTICIPATION IN THE PCT-PPH PROGRAM AND PETITIONS TO MAKE THE ABOVE-IDENTIFIED APPLICATION SPECIAL UNDER THE PCT-PPH PROGRAM.

The above-identified application is (1) a national stage entry of the corresponding PCT application, or (2) a national stage entry of another PCT application which claims priority to the corresponding PCT application, or (3) a national application that claims domestic/ foreign priority to the corresponding PCT application, or (4) a national application which forms the basis for the priority claim in the corresponding PCT application, or (5) a continuing application of a U.S. application that satisfies one of (1) to (4) above, or (6) a U.S. application that claims domestic benefit to a U.S. provisional application which forms the basis for the priority claim in the corresponding PCT application.

The corresponding PCT application number(s) is/are: PCT/US2010/057405

The international filing date of the corresponding PCT application(s) is/are: November 19, 2010

I. List of Required Documents:

a. **A copy of the latest international work product (WO/ISA, WO/IPEA, or IPER) in the above–identified corresponding PCT application(s)**

☐ Is attached

☒ Is not attached because the document is already in the U.S. application.

b. **A copy of all claims which were indicated as having novelty, inventive step and industrial applicability in the above-identified corresponding PCT application(s).**

☐ Is attached.

☒ Is not attached because the document is already in the U.S. application.

c. **English translations of the documents in a. and b. above are attached (if the documents are not in the English language). A statement that the English translation is accurate is attached for the document in b. above.**

This collection of information is required by 35 U.S.C. 119, 37 CFR 1.55, and 37 CFR 1.102(d). The information is required to obtain or retain a benefit by the public, which is to file (and by the USPTO to process) an application. Confidentiality is governed by 35 U.S.C. 122 and 37 CFR 1.11 and 1.14. This collection is estimated to take 2 hours to complete, including gathering, preparing, and submitting the completed application form to the USPTO. Time will vary depending upon the individual case. Any comments on the amount of time you require to complete this form and/or suggestions for reducing this burden should be sent to the Chief Information Officer, U.S. Patent and Trademark Office, U.S. Department of Commerce, P.O. Box 1450, Alexandria, VA 22313-1450. DO NOT SEND FEES OR COMPLETED FORMS TO THIS ADDRESS.

Approved for use through 01/31/2012. OMB 0651-0058
U.S.Patent and Trademark Office; U.S. DEPARTMENT OF COMMERCE

Under the Paperwork Reduction Act of 1995, no persons are required to respond to a collection of information unless it displays a valid OMB control number.

REQUEST FOR PARTICIPATION IN THE PCT-PPH PILOT PROGRAM BETWEEN THE EPO AND THE USPTO

(continued)

Application No.:	13/164,045
First Named Inventor:	Ramu S.

d. **(1) An information disclosure statement listing the documents cited in the international work products (ISR, WO/ISA, WO/IPEA, IPER) of the corresponding PCT application.**

☐ Is attached

☒ Has already been filed in the above-identified U.S. application on June 20, 2011

(2) Copies of all documents (except) for U.S. patents or U.S. patent application publications)

☐ Are attached.

☒ Have already been filed in the above-identified U.S. application on June 20, 2011 and June 22, 2011

II. Claims Correspondence Table:

Claims in US Application	Patentable Claims in the corresponding PCT Application	Explanation regarding the correspondence
1	1	Identical
2	2	Same except that US claim additionally recites "wherein the first plurality of duplexes comprises homoduplexes" in a)
3	3	Identical
4	4	Identical
5	5	Identical
6	6	Identical
7	7	Identical
8	8	Identical
9	9	Identical
10	10	Identical
11	11	Identical
12	12	Same except that US claim recites "microvolume" in place of "volume" in c)
13	13	Identical
14	14	Identical
15	15	Identical
16	16	Identical
17	17	Identical
18	18	Identical
19	19	Identical

III. All the claims in the US application sufficiently correspond to the patentable claims in the corresponding PCT application.

Signature /Natalie Salem, Reg. No. 58,731/	Date June 27, 2011
Name (Print/Typed) Natalie Salem	Registration Number 58,731

UNITED STATES PATENT AND TRADEMARK OFFICE

Commissioner for Patents
United States Patent and Trademark Office
P.O. Box 1450
Alexandria, VA 22313-1450
www.uspto.gov

BAKER BOTTS L.L.P.
2001 ROSS AVENUE
SUITE 600
DALLAS TX 75201-2980

MAILED

JUL 08 2011

OFFICE OF PETITIONS

In re Application of :
MARONEY and CHAKRAVARTY :
Application No. 13/164,070 : ON PETITION
Filed: 06/20/2011 :
Attorney Docket No. 063034.0286 :

This is in response to the communication filed on June 20, 2011, which includes a copy the petition under 37 CFR 1.47(a), filed on September 10, 2008, in prior-filed Application No. 11/944,303.

In accordance with 37 CFR 1.63(d), petitioner submitted a copy of the executed declaration filed in Application No. 11/944,303 on September 10, 2008, of which the present filing is a continuation application. Additionally, petitioner submitted a copy of the decision, mailed on February 25, 2009, granting a petition under 37 CFR 1.47(a) in the prior application. As § 1.47(a) status was granted in the prior application, this application is hereby accorded § 1.47(a) status.

The present petition is **dismissed** as involving a moot issue because a petition is unnecessary to accord § 1.47(a) status in this application.

As provided in 37 CFR 1.47(c), the Office is dispensing with the notice provision in this continuation application because the Office provided notice to the non-signing inventor regarding the § 1.47(a) status in the prior application.

This matter is being referred to the Office of Patent Application Processing for further processing.

Telephone inquiries related to this decision may be directed to the undersigned at (571) 272-3211.

Christina Tartera Donnell

Christina Tartera Donnell
Senior Petitions Attorney
Office of Petitions

Doc Code: PET.GREEN
Document Description: Petition for Green Tech Pilot

PTO/SB/420 (03-11)

PETITION TO MAKE SPECIAL UNDER THE GREEN TECHNOLOGY PILOT PROGRAM

Attorney Docket Number: 92868-807257 (000120US)	Application Number (if known): 13/164088	Filing date: June 20, 2011

First Named Inventor: Richard Root Woods

Title: IMPROVED RECOVERY OF DESIRED CO-PRODUCTS FROM FERMENTATION STILLAGE STREAMS

APPLICANT HEREBY REQUESTS TO PARTICIPATE IN THE GREEN TECHNOLOGY PILOT PROGRAM FOR THE ABOVE-IDENTIFIED APPLICATION. See Instruction Sheet on page 2.

This petition must be timely filed electronically using the USPTO electronic filing system, EFS-Web.

1. By filing this petition:

   Applicant is requesting early publication: Applicant hereby requests early publication under 37 CFR 1.219 and the publication fee set forth in 37 CFR 1.18(d) accompanies this request.

2. By filing this petition: applicant is agreeing to make an election without traverse in a telephonic interview and elect an invention that meets the eligibility requirements for the Green Technology Pilot Program, if the Office determines that the claims are not obviously directed to a single invention. See Instruction Sheet.

3. This request is accompanied by statements of special status for the eligibility requirement.

4. The application contains no more than three (3) independent claims and twenty (20) total claims.

5. The application does not contain any multiple dependent claims.

6. Other attachments: Pet to Make Special, etc.; Statement of Material Contribution, etc.

Signature	Date 7-27-11
Name (Print/Typed) Matthew E. Hinsch	Registration Number 47,651

Note: *Signatures of all the inventors or assignees of record of the entire interest or their representative(s) are required in accordance with 37 CFR 1.33 and 11.18. Please see 37 CFR 1.4(d) for the form of the signature. If necessary, submit multiple forms for more than one signature, see below*.*

☑ *Total of 2 forms are submitted.

If you need assistance in completing the form, call 1-800-PTO-9199 and select option 2.

I hereby certify that this correspondence is being filed via EFS-Web with the United States Patent and Trademark Office on July 27, 2011.

KILPATRICK TOWNSEND & STOCKTON LLP

By: Patricia Andrus

PATENT

Attorney Docket No.: 92868-807257

IN THE UNITED STATES PATENT AND TRADEMARK OFFICE

In re application of:	Confirmation No.: 1149
Richard Root Woods, et al.	Examiner: Not Yet Assigned
Application No.: 13/164,088	Art Unit:
Filed: June 20, 2011	
For: IMPROVED RECOVERY OF DESIRED CO-PRODUCTS FROM FERMENTATION STILLAGE STREAMS	**PETITION TO MAKE SPECIAL UNDER GREEN TECHNOLOGY PILOT PROGRAM**
Customer No.: 20350	

Mail Stop Petition
Commissioner for Patents
P.O. Box 1450
Alexandria, VA 22313-1450

Commissioner:

Applicants hereby petition to make the present application special under the Green Technology Pilot Program. As explained in the "Statement of Material Contribution to the More Efficient Utilization and Conservation of Energy Resources" accompanying this petition, this application is eligible for the Green Technology Pilot Program.

The conditions set forth in the Federal Register, Vol. 742, No. 234, of December 8, 2009, pages 64666-64669, and Vol. 75., No. 217, of November 10, 2010, pages 69050- for this petition are met as follows:

(1) The application is a non-provisional utility application filed under 35 U.S.C. 111(a) on June 20, 2011.

(2) The application as filed contains three or fewer independent claims and twenty or fewer total claims.

(3) The claims are directed to a single invention that materially contributes to the more efficient utilization and conservation of energy resources, as explained in the attached "Statement of Material Contribution ..." If the USPTO determines that the claims are directed to multiple inventions, Applicants will agree to make an election without traverse in a telephonic interview, and to elect an invention that meets the eligibility requirements set forth in Sections II, III, and VI of the December 8, 2009 Federal Register notice.

(4) This petition is being filed electronically, using the USPTO electronic filing system.

(5) The application has not received a first Office Action.

(6) A "Request for Early Publication" accompanies this Petition, together with a publication fee under 37 CFR § 1.18(d).

If any additional fees are required to support this petition, the Commissioner is hereby authorized to charge such fees to Deposit Account No. 20-1430.

Respectfully submitted,

Matthew Hinsch
Reg. No. 47,651

KILPATRICK TOWNSEND & STOCKTON LLP
Two Embarcadero Center, Eighth Floor
San Francisco, California 94111-3834
Tel: 415-576-0200
Fax: 415-576-0300
email: mhinsch@kilpatricktownsend.com
MEH:meh
63633273 v1

I hereby certify that this correspondence is being filed via EFS-Web with the United States Patent and Trademark Office on July 27, 2011.

KILPATRICK TOWNSEND & STOCKTON LLP

By: Patricia Andrews

PATENT

Attorney Docket No.: 92868-807257

IN THE UNITED STATES PATENT AND TRADEMARK OFFICE

In re application of:	Confirmation No.: 1149
Richard Root Woods, et al.	Examiner: Not Yet Assigned
Application No.: 13/164,088	Art Unit:
Filed: June 20, 2011	
For: IMPROVED RECOVERY OF DESIRED CO-PRODUCTS FROM FERMENTATION STILLAGE STREAMS	**STATEMENT OF MATERIAL CONTRIBUTION TO THE MORE EFFICIENT UTILIZATION AND CONSERVATION OF ENERGY RESOURCES**
Customer No.: 20350	

Mail Stop Petition
Commissioner for Patents
P.O. Box 1450
Alexandria, VA 22313-1450

Commissioner:

As one of the requirements for the accompanying Petition to Make Special Under the Green Technology Pilot Program, Applications hereby submit this statement explaining how the invention in this patent application materially contributes to the more efficient utilization and conservation of energy resources.

The invention includes methods of enhancing the recovery of desired co-products from post fermentation stillage streams and to processes that recover lipid-rich fractions and aqueous fractions rich in organic acids, glycerin and other compounds present in or derivable from the post fermentation broth. This is an improvement on the ethanol and corn oil production

methods currently available. Applicants submit that the invention in this patent application qualifies for the grant of this petition.

Respectfully submitted,

Matthew Hinsch
Reg. No. 47,651

KILPATRICK TOWNSEND & STOCKTON LLP
Two Embarcadero Center, Eighth Floor
San Francisco, California 94111-3834
Tel: 415-576-0200
Fax: 415-576-0300
email: mhinsch@kilpatricktownsend.com
MEH:meh
63633355 v1

UNITED STATES PATENT AND TRADEMARK OFFICE

UNITED STATES DEPARTMENT OF COMMERCE
United States Patent and Trademark Office
Address: COMMISSIONER FOR PATENTS
P.O. Box 1450
Alexandria, Virginia 22313-1450
www.uspto.gov

APPLICATION NO.	FILING DATE	FIRST NAMED INVENTOR	ATTORNEY DOCKET NO.	CONFIRMATION NO.
13/164,088	06/20/2011	Richard Root Woods	92868-807257 (000120US)	1149

20350 7590 08/26/2011
KILPATRICK TOWNSEND & STOCKTON LLP
TWO EMBARCADERO CENTER
EIGHTH FLOOR
SAN FRANCISCO, CA 94111-3834

EXAMINER

ART UNIT	PAPER NUMBER
1778	

NOTIFICATION DATE	DELIVERY MODE
08/26/2011	ELECTRONIC

Please find below and/or attached an Office communication concerning this application or proceeding.

The time period for reply, if any, is set in the attached communication.

Notice of the Office communication was sent electronically on above-indicated "Notification Date" to the following e-mail address(es):

Docket@kilpatricktownsend.com
ipefiling@kilpatricktownsend.com
jlhice@kilpatrick.foundationip.com

UNITED STATES PATENT AND TRADEMARK OFFICE

Commissioner for Patents
United States Patent and Trademark Office
P.O. Box 1450
Alexandria, VA 22313-1450
www.uspto.gov

8/26/11

KILPATRICK TOWNSEND & STOCKTON LLP
TWO EMBARCADERO CENTER
EIGHTH FLOOR
SAN FRANCISCO CA 94111-3834

In re Application of	:	
Richard R. Woods et al.	:	DECISION ON PETITION
Application No. 13/164,088	:	TO MAKE SPECIAL UNDER
Filed: June 20, 2011	:	THE GREEN TECHNOLOGY
Attorney Docket No. 92868-807257 (000120US)	:	PILOT PROGRAM

This is a decision on the petition under 37 CFR 1.102, filed July 27, 2011, to make the above-identified application special under the pilot program for applications pertaining to Green Technologies as set forth in 74 Federal Register Notice 64666 (December 8, 2009) and amended by 75 Federal Register Notice 28554 (May 21, 2010) and 75 Federal Register Notice 69049 (November 10, 2010).

The petition is **GRANTED**.

A grantable petition to make an application special under 37 CFR 1.102 and the pilot program as set forth in 74 FR 64666 must be directed to a nonprovisional application filed under 35 USC 111(a) or be a national stage entry under 35 USC 371, exclusive of any reissue applications.

In order to qualify for special status, the following requirements must be met. 1) The application must have no more than 3 independent claims and no more than 20 total claims. 2) The application must not contain any multiple dependent claims. 3) The petition must state the basis for seeking special status, i.e., the claimed invention either: A) materially enhances the quality of the environment or B) materially contributes to: i) the discovery or development of renewable energy resources, ii) the more efficient utilization and conservation of energy resources, or iii) greenhouse gas emission reduction. 4) If the disclosure is not clear on its face that the claimed invention materially contributes under category (A) or (B), the petition must be accompanied by a statement by the applicant, assignee, or an attorney/agent registered to practice before the Office explaining how the materiality standard is met. 5) A statement that applicant will agree to make an election without traverse in a telephonic interview if a restriction requirement is made by the examiner. 6) The petition to make special must be filed electronically. 7) The petition must be filed at least one day prior to the date that a first Office Action appears in the Patent Application Information Retrieval (PAIR) system. 8) The petition must be accompanied by a request for early publication in compliance with 37 CFR 1.219 and include the publication fee as set forth in 37 CFR 1.18(d).

The requirement for a fee for consideration of the petition to make special for applications pertaining to Green Technologies has been waived.

The instant petition complies with items 1 – 8 above. Accordingly, the above-identified application has been accorded "special" status.

Telephone inquires concerning this decision should be directed to Blaine Copenheaver at 571-272-1156.

The application is being forwarded to the examiner for action on the merits commensurate with this decision.

/Blaine Copenheaver/

Blaine Copenheaver
Quality Assurance Specialist
Technology Center 1700

Doc Code: PET.GREEN
Document Description: Petition for Green Tech Pilot

PTO/SB/420 (03-11)

PETITION TO MAKE SPECIAL UNDER THE GREEN TECHNOLOGY PILOT PROGRAM

Attorney Docket Number: 357181.00014	Application Number (if known):	Filing date:

First Named Inventor: Paul Joseph ANDERSEN

Title: TRANSITION METAL / ZEOLITE SCR CATALYSTS

APPLICANT HEREBY REQUESTS TO PARTICIPATE IN THE GREEN TECHNOLOGY PILOT PROGRAM FOR THE ABOVE-IDENTIFIED APPLICATION. See Instruction Sheet on page 2.

This petition must be timely filed electronically using the USPTO electronic filing system, EFS-Web.

1. By filing this petition:

   Applicant is requesting early publication: Applicant hereby requests early publication under 37 CFR 1.219 and the publication fee set forth in 37 CFR 1.18(d) accompanies this request.

2. By filing this petition: applicant is agreeing to make an election without traverse in a telephonic interview and elect an invention that meets the eligibility requirements for the Green Technology Pilot Program, if the Office determines that the claims are not obviously directed to a single invention. See Instruction Sheet.

3. This request is accompanied by statements of special status for the eligibility requirement.

4. The application contains no more than three (3) independent claims and twenty (20) total claims.

5. The application does not contain any multiple dependent claims.

6. Other attachments: _____

Signature /Stephen J. Driscoll/	Date 2011-06-20
Name (Print/Typed) Stephen J. Driscoll	Registration Number 37564

Note: Signatures of all the inventors or assignees of record of the entire interest or their representative(s) are required in accordance with 37 CFR 1.33 and 11.18. Please see 37 CFR 1.4(d) for the form of the signature. If necessary, submit multiple forms for more than one signature, see below.*

☐ *Total of 1 forms are submitted.

If you need assistance in completing the form, call 1-800-PTO-9199 and select option 2.

UNITED STATES PATENT AND TRADEMARK OFFICE

UNITED STATES DEPARTMENT OF COMMERCE
United States Patent and Trademark Office
Address: COMMISSIONER FOR PATENTS
P.O. Box 1450
Alexandria, Virginia 22313-1450
www.uspto.gov

APPLICATION NO.	FILING DATE	FIRST NAMED INVENTOR	ATTORNEY DOCKET NO.	CONFIRMATION NO.
13/164,150	06/20/2011	Joseph Michael Fedeyko	357181.00014	1279

78905 7590 08/04/2011
Saul Ewing LLP (Philadelphia)
Attn: Patent Docket Clerk
Centre Square West
1500 Market Street, 38th Floor
Philadelphia, PA 19102-2186

EXAMINER

ART UNIT	PAPER NUMBER
1732	

NOTIFICATION DATE	DELIVERY MODE
08/04/2011	ELECTRONIC

Please find below and/or attached an Office communication concerning this application or proceeding.

The time period for reply, if any, is set in the attached communication.

Notice of the Office communication was sent electronically on above-indicated "Notification Date" to the following e-mail address(es):

patents@saul.com

UNITED STATES PATENT AND TRADEMARK OFFICE

Commissioner for Patents
United States Patent and Trademark Office
P.O. Box 1450
Alexandria, VA 22313-1450
www.uspto.gov

Saul Ewing LLP (Philadelphia)
Attn: Patent Docket Clerk
Centre Square West
1500 Market Street, 38th Floor
Philadelphia PA 19102-2186

AUG 0 4 2011

In re Application of	:	
FEDEYKO, JOSEPH MICHAEL	:	DECISION ON PETITION
Application No. 13/164,150	:	TO MAKE SPECIAL UNDER
Filed: 06/20/2011	:	THE GREEN TECHNOLOGY
Attorney Docket No. 357181.00014	:	PILOT PROGRAM

This is a decision on the petition under 37 CFR 1.102, filed June 20, 2011, to make the above-identified application special under the pilot program for applications pertaining to Green Technologies as set forth in 74 Federal Register Notice 64666 (December 8, 2009) and amended by 75 Federal Register Notice 28554 (May 21, 2010) and 75 Federal Register Notice 69049 (November 10, 2010).

The petition is **GRANTED**.

A grantable petition to make an application special under 37 CFR 1.102 and the pilot program as set forth in 74 FR 64666 must be directed to a nonprovisional application filed under 35 USC 111(a) or be a national stage entry under 35 USC 371, exclusive of any reissue applications.

In order to qualify for special status, the following requirements must be met. 1) The application must have no more than 3 independent claims and no more than 20 total claims. 2) The application must not contain any multiple dependent claims. 3) The petition must state the basis for seeking special status, i.e., the claimed invention either: A) materially enhances the quality of the environment or B) materially contributes to: i) the discovery or development of renewable energy resources, ii) the more efficient utilization and conservation of energy resources, or iii) greenhouse gas emission reduction. 4) If the disclosure is not clear on its face that the claimed invention materially contributes under category (A) or (B), the petition must be accompanied by a statement by the applicant, assignee, or an attorney/agent registered to practice before the Office explaining how the materiality standard is met. 5) A statement that applicant will agree to make an election without traverse in a telephonic interview if a restriction requirement is made by the examiner. 6) The petition to make special must be filed electronically. 7) The petition must be filed at least one day prior to the date that a first Office Action appears in the Patent Application Information Retrieval (PAIR) system. 8) The petition must be accompanied by a

request for early publication in compliance with 37 CFR 1.219 and include the publication fee as set forth in 37 CFR 1.18(d).

The requirement for a fee for consideration of the petition to make special for applications pertaining to Green Technologies has been waived.

The instant petition complies with items 1 – 8 above. Accordingly, the above-identified application has been accorded "special" status.

Telephone inquires concerning this decision should be directed to Tom Dunn at 571-272-1171.

The application is being forwarded to the Technology Center Art Unit 1732 for action on the merits commensurate with this decision.

/Tom Dunn/

Tom Dunn
Quality Assurance Specialist
Technology Center 1700

UNITED STATES PATENT AND TRADEMARK OFFICE

Commissioner for Patents
United States Patent and Trademark Office
P.O. Box 1450
Alexandria, VA 22313-1450
www.uspto.gov

CARLSON, GASKEY & OLDS, P.C.
400 WEST MAPLE ROAD
SUITE 350
BIRMINGHAM MI 48009

MAILED
FEB 27 2012
OFFICE OF PETITIONS

In re Application of	:	
Fredric Goldstein, et al.	:	
Application No. 13/164,197	:	DECISION ON PETITION
Filed: June 20, 2011	:	TO MAKE SPECIAL UNDER
Attorney Docket No. 67261-001 PUS5	:	37 CFR 1.102(c)(1)
	:	

This is a decision on the petition under 37 CFR 1.102(c)(1), filed January 16, 2012, to make the above-identified application special based on applicant's age as set forth in M.P.E.P. § 708.02, Section IV.

The petition is **GRANTED**.

A grantable petition to make an application special under 37 CFR 1.102(c)(1) and MPEP § 708.02, Section IV: Applicant's Age must be accompanied by evidence showing that at least one of the applicants is 65 years of age, or more, such as a birth certificate or a statement by applicant. No fee is required.

The instant petition includes a statement from the attorney of record declaring that he/she is in possession of such evidence that shows the applicant is 65 years of age or older. Accordingly, the above-identified application has been accorded "special" status.

Telephone inquiries concerning this decision should be directed to Terri Johnson at 571-272-2991.

All other inquiries concerning either the examination or status of the application should be directed to the Technology Center.

This application will be forwarded to the examiner for action on the merits commensurate with this decision once the formalities review has been completed.

/Terri Johnson/
Terri Johnson
Petitions Examiner
Office of Petitions

Doc Code: PET.GREEN
Document Description: Petition for Green Tech Pilot

PTO/SB/420 (03-11)

PETITION TO MAKE SPECIAL UNDER THE GREEN TECHNOLOGY PILOT PROGRAM

Attorney Docket Number: 52156-48971	Application Number (if known): 13/164,249	Filing date: June 20, 2011

First Named Inventor: Robert Ellery

Title: Biomass Boiler SCR NOx And CO Reduction System

APPLICANT HEREBY REQUESTS TO PARTICIPATE IN THE GREEN TECHNOLOGY PILOT PROGRAM FOR THE ABOVE-IDENTIFIED APPLICATION. See Instruction Sheet on page 2.

This petition must be timely filed electronically using the USPTO electronic filing system, EFS-Web.

1. By filing this petition:

   Applicant is requesting early publication: Applicant hereby requests early publication under 37 CFR 1.219 and the publication fee set forth in 37 CFR 1.18(d) accompanies this request.

2. By filing this petition: applicant is agreeing to make an election without traverse in a telephonic interview and elect an invention that meets the eligibility requirements for the Green Technology Pilot Program, if the Office determines that the claims are not obviously directed to a single invention. See Instruction Sheet.

3. This request is accompanied by statements of special status for the eligibility requirement.

4. The application contains no more than three (3) independent claims and twenty (20) total claims.

5. The application does not contain any multiple dependent claims.

6. Other attachments: _____

Signature Richard B Lazarus	Date 24 December 2011
Name (Print/Typed) Richard B. Lazarus	Registration Number 48,215

Note: *Signatures of all the inventors or assignees of record of the entire interest or their representative(s) are required in accordance with 37 CFR 1.33 and 11.18. Please see 37 CFR 1.4(d) for the form of the signature. If necessary, submit multiple forms for more than one signature, see below*.*

☐ *Total of_____ forms are submitted.

If you need assistance in completing the form, call 1-800-PTO-9199 and select option 2.

Instruction Sheet for
Petition to Make Special Under the Green Technology Pilot Program

(Not to be Submitted to the USPTO)

The following is a summary of the requirements (for more information see the notices (i) "Pilot Program for Green Technologies Including Greenhouse Gas Reduction," (ii) "Elimination of Classification Requirement in the Green Technology Pilot Program," and (iii) "Expansion and Extension of the Green Technology Pilot Program," available on the USPTO web site at http://www.uspto.gov/patents/init_events/green_tech.jsp):

(1) The application must be a non-reissue, non-provisional utility application filed under 35 U.S.C. 111(a), or an international application that has entered the national stage in compliance with 35 U.S.C. 371, irrespective of the filing date of the application. Reexamination proceedings are excluded from this pilot program.

(2) The application must contain three or fewer independent claims and twenty or fewer total claims. The application must not contain any multiple dependent claims. For an application that contains more than three independent claims or twenty total claims, or multiple dependent claims, applicant must file a preliminary amendment in compliance with 37 CFR 1.121 to cancel the excess claims and/or the multiple dependent claims at the time the petition to make special is filed.

(3) The claims must be directed to a single invention that materially enhances the quality of the environment, or that materially contributes to: (1) the discovery or development of renewable energy resources; (2) the more efficient utilization and conservation of energy resources; or (3) green house gas emission reduction (see the eligibility requirements of sections II and III of the notice (i) cited above). The petition must include a statement that, if the USPTO determines that the claims are directed to multiple inventions (e.g., in a restriction requirement), applicant will agree to make an election without traverse in a telephonic interview, and elect an invention that meets the eligibility requirements in section II or III of the notice (i) cited above.

(4) The petition to make special must be timely filed electronically using the USPTO electronic filing system, EFS-Web, and selecting the document description of "Petition for Green Tech Pilot" on the EFS-Web screen. Applicant should use form PTO/SB/420, which is available as a Portable Document Format (PDF) fillable form in EFS-Web and on the USPTO Web site.

(5) The petition to make special must be filed at least one day prior to the date that a first Office action (which may be an Office action containing only a restriction requirement) appears in the Patent Application Information Retrieval (PAIR) system. Applicant may check the status of the application using PAIR.

(6) The petition to make special must be accompanied by a request for early publication in compliance with 37 CFR 1.219 and the publication fee set forth in 37 CFR 1.18(d).

Privacy Act Statement

The **Privacy Act of 1974 (P.L. 93-579)** requires that you be given certain information in connection with your submission of the attached form related to a patent application or patent. Accordingly, pursuant to the requirements of the Act, please be advised that: (1) the general authority for the collection of this information is 35 U.S.C. 2(b)(2); (2) furnishing of the information solicited is voluntary; and (3) the principal purpose for which the information is used by the U.S. Patent and Trademark Office is to process and/or examine your submission related to a patent application or patent. If you do not furnish the requested information, the U.S. Patent and Trademark Office may not be able to process and/or examine your submission, which may result in termination of proceedings or abandonment of the application or expiration of the patent.

The information provided by you in this form will be subject to the following routine uses:

1. The information on this form will be treated confidentially to the extent allowed under the Freedom of Information Act (5 U.S.C. 552) and the Privacy Act (5 U.S.C 552a). Records from this system of records may be disclosed to the Department of Justice to determine whether disclosure of these records is required by the Freedom of Information Act.
2. A record from this system of records may be disclosed, as a routine use, in the course of presenting evidence to a court, magistrate, or administrative tribunal, including disclosures to opposing counsel in the course of settlement negotiations.
3. A record in this system of records may be disclosed, as a routine use, to a Member of Congress submitting a request involving an individual, to whom the record pertains, when the individual has requested assistance from the Member with respect to the subject matter of the record.
4. A record in this system of records may be disclosed, as a routine use, to a contractor of the Agency having need for the information in order to perform a contract. Recipients of information shall be required to comply with the requirements of the Privacy Act of 1974, as amended, pursuant to 5 U.S.C. 552a(m).
5. A record related to an International Application filed under the Patent Cooperation Treaty in this system of records may be disclosed, as a routine use, to the International Bureau of the World Intellectual Property Organization, pursuant to the Patent Cooperation Treaty.
6. A record in this system of records may be disclosed, as a routine use, to another federal agency for purposes of National Security review (35 U.S.C. 181) and for review pursuant to the Atomic Energy Act (42 U.S.C. 218(c)).
7. A record from this system of records may be disclosed, as a routine use, to the Administrator, General Services, or his/her designee, during an inspection of records conducted by GSA as part of that agency's responsibility to recommend improvements in records management practices and programs, under authority of 44 U.S.C. 2904 and 2906. Such disclosure shall be made in accordance with the GSA regulations governing inspection of records for this purpose, and any other relevant (*i.e.*, GSA or Commerce) directive. Such disclosure shall not be used to make determinations about individuals.
8. A record from this system of records may be disclosed, as a routine use, to the public after either publication of the application pursuant to 35 U.S.C. 122(b) or issuance of a patent pursuant to 35 U.S.C. 151. Further, a record may be disclosed, subject to the limitations of 37 CFR 1.14, as a routine use, to the public if the record was filed in an application which became abandoned or in which the proceedings were terminated and which application is referenced by either a published application, an application open to public inspection or an issued patent.
9. A record from this system of records may be disclosed, as a routine use, to a Federal, State, or local law enforcement agency, if the USPTO becomes aware of a violation or potential violation of law or regulation.

UNITED STATES PATENT AND TRADEMARK OFFICE

UNITED STATES DEPARTMENT OF COMMERCE
United States Patent and Trademark Office
Address: COMMISSIONER FOR PATENTS
P.O. Box 1450
Alexandria, Virginia 22313-1450
www.uspto.gov

APPLICATION NO.	FILING DATE	FIRST NAMED INVENTOR	ATTORNEY DOCKET NO.	CONFIRMATION NO.
13/164,249	06/20/2011	Robert Ellery	52156-48971	1486

23646 7590 01/09/2012
BARNES & THORNBURG LLP
1717 Pennsylvania Ave. NW
SUITE 500
WASHINGTON, DC 20006-4623

EXAMINER
VANOY, TIMOTHY C

ART UNIT	PAPER NUMBER
1734	

NOTIFICATION DATE	DELIVERY MODE
01/09/2012	ELECTRONIC

Please find below and/or attached an Office communication concerning this application or proceeding.

The time period for reply, if any, is set in the attached communication.

Notice of the Office communication was sent electronically on above-indicated "Notification Date" to the following e-mail address(es):

vrobertson@btlaw.com
DocketingPAT-DC@btlaw.com

UNITED STATES PATENT AND TRADEMARK OFFICE

Commissioner for Patents
United States Patent and Trademark Office
P.O. Box 1450
Alexandria, VA 22313-1450
www.uspto.gov

BARNES & THORNBURG LLP
1717 Pennsylvania Ave. NW
SUITE 500
WASHINGTON DC 20006-4623

1/9/12

In re Application of	:	
Ellery	:	DECISION ON PETITION
Application No. 13/164,249	:	TO MAKE SPECIAL UNDER
Filed: 6/20/2011	:	THE GREEN TECHNOLOGY
Attorney Docket No. **52156-48971**	:	PILOT PROGRAM

This is a decision on the petition under 37 CFR 1.102, filed 12/27/2011, to make the above-identified application special under the pilot program for applications pertaining to Green Technologies as set forth in 74 Federal Register Notice 64666 (December 8, 2009) and amended by 75 Federal Register Notice 28554 (May 21, 2010) and 75 Federal Register Notice 69049 (November 10, 2010).

The petition is **GRANTED**.

A grantable petition to make an application special under 37 CFR 1.102 and the pilot program as set forth in 74 FR 64666 must be directed to a nonprovisional application filed under 35 USC 111(a) or be a national stage entry under 35 USC 371, exclusive of any reissue applications.

In order to qualify for special status, the following requirements must be met. 1) The application must have no more than 3 independent claims and no more than 20 total claims. 2) The application must not contain any multiple dependent claims. 3) The petition must state the basis for seeking special status, i.e., the claimed invention either: A) materially enhances the quality of the environment or B) materially contributes to: i) the discovery or development of renewable energy resources, ii) the more efficient utilization and conservation of energy resources, or iii) greenhouse gas emission reduction. 4) If the disclosure is not clear on its face that the claimed invention materially contributes under category (A) or (B), the petition must be accompanied by a statement by the applicant, assignee, or an attorney/agent registered to practice before the Office explaining how the materiality standard is met. 5) A statement that applicant will agree to make an election without traverse in a telephonic interview if a restriction requirement is made by the examiner. 6) The petition to make special must be filed electronically. 7) The petition must be filed at least one day prior to the date that a first Office Action appears in the Patent Application Information Retrieval (PAIR) system. 8) The petition must be accompanied by a

request for early publication in compliance with 37 CFR 1.219 and include the publication fee as set forth in 37 CFR 1.18(d).

The requirement for a fee for consideration of the petition to make special for applications pertaining to Green Technologies has been waived.

The instant petition complies with items 1 – 8 above. Accordingly, the above-identified application has been accorded "special" status.

Telephone inquires concerning this decision should be directed to Tom Dunn at 571-272-1171.

The application is being forwarded to the Technology Center Art Unit 1734 for action on the merits commensurate with this decision.

/Tom Dunn/

Tom Dunn
Quality Assurance Specialist
Technology Center 1700

Doc code : PET.OP.AGE
Description : Petition to make special based on Age/Health

PTO/SB/130 (07-09)
Approved for use through 07/31/2012. OMB 0651- 0031
U.S. Patent and Trademark Office; U.S. DEPARTMENT OF COMMERCE
Under the Paperwork Reduction Act of 1995, no persons are required to respond to a collection of information unless it contains a valid OMB control number

PETITION TO MAKE SPECIAL BASED ON AGE FOR ADVANCEMENT OF EXAMINATION UNDER 37 CFR 1.102(c)(1)

Application Information

Application Number	13164275	Confirmation Number	1528	Filing Date	2011-06-20
Attorney Docket Number (optional)	IMM194US7	Art Unit	1643	Examiner	Huff, Sheela Jitendra
First Named Inventor	Serengulam V. Govindan				
Title of Invention	Immunoconjugates with an Intracellularly-Cleavable Linkage				

Attention: Office of Petitions
An application may be made special for advancement of examination upon filing of a petition showing that the applicant is 65 years of age, or more. No fee is required with such a petition. See 37 CFR 1.102(c)(1) and MPEP 708.02 (IV).

APPLICANT HEREBY PETITIONS TO MAKE SPECIAL FOR ADVANCEMENT OF EXAMINATION IN THIS APPLICATION UNDER 37 CFR 1.102(c)(1) and MPEP 708.02 (IV) ON THE BASIS OF THE APPLICANT'S AGE.

A grantable petition requires one of the following items:
(1) Statement by one named inventor in the application that he/she is 65 years of age, or more; or
(2) Certification by a registered attorney/agent having evidence such as a birth certificate, passport, driver's license, etc. showing one named inventor in the application is 65 years of age, or more.

Name of Inventor who is 65 years of age, or older

Given Name	Middle Name	Family Name	Suffix
David	M.	Goldenberg	

A signature of the applicant or representative is required in accordance with 37 CFR 1.33 and 10.18.
Please see 37 CFR 1.4(d) for the format of the signature.

Select (1) or (2) :

○ (1) I am an inventor in this application and I am 65 years of age, or more.

● (2) I am an attorney or agent registered to practice before the Patent and Trademark Office, and I certify that I am in possession of evidence, and will retain such in the application file record, showing that the inventor listed above is 65 years of age, or more.

Signature	/Richard A. Nakashima/	Date (YYYY-MM-DD)	2011-09-19
Name	Richard A. Nakashima	Registration Number	42023

PTO/SB/130 (07-09)
Approved for use through 07/31/2012. OMB 0651- 0031
U.S. Patent and Trademark Office; U.S. DEPARTMENT OF COMMERCE
Under the Paperwork Reduction Act of 1995, no persons are required to respond to a collection of information unless it contains a valid OMB control number

Privacy Act Statement

The Privacy Act of 1974 (P.L. 93-579) requires that you be given certain information in connection with your submission of the attached form related to a patent application or patent. Accordingly, pursuant to the requirements of the Act, please be advised that: (1) the general authority for the collection of this information is 35 U.S.C. 2(b)(2); (2) furnishing of the information solicited is voluntary; and (3) the principal purpose for which the information is used by the U.S. Patent and Trademark Office is to process and/or examine your submission related to a patent application or patent. If you do not furnish the requested information, the U.S. Patent and Trademark Office may not be able to process and/or examine your submission, which may result in termination of proceedings or abandonment of the application or expiration of the patent.

The information provided by you in this form will be subject to the following routine uses:

1. The information on this form will be treated confidentially to the extent allowed under the Freedom of Information Act (5 U.S.C. 552) and the Privacy Act (5 U.S.C. 552a). Records from this system of records may be disclosed to the Department of Justice to determine whether the Fr eedom of Information Act requires disclosure of these records.

2. A record from this system of records may be disclosed, as a routine use, in the course of presenting evidence to a court, magistrate, or administrative tribunal, including disclosures to opposing counsel in the course of settlement negotiations.

3. A record in this system of records may be disclosed, as a routine use, to a Member of Congress submitting a request involving an individual, to whom the record pertains, when the individual has requested assistance from the Member with respect to the subject matter of the record.

4. A record in this system of records may be disclosed, as a routine use, to a contractor of the Agency having need for the information in order to perform a contract. Recipients of information shall be required to comply with the requirements of the Privacy Act of 1974, as amended, pursuant to 5 U.S.C. 552a(m).

5. A record related to an International Application filed under the Patent Cooperation Treaty in this system of records may be disclosed, as a routine use, to the International Bureau of the World Intellectual Property Organization, pursuant to the Patent Cooperation Treaty.

6. A record in this system of records may be disclosed, as a routine use, to another federal agency for purposes of National Security review (35 U.S.C. 181) and for review pursuant to the Atomic Energy Act (42 U.S.C. 218(c)).

7. A record from this system of records may be disclosed, as a routine use, to the Administrator, General Services, or his/her designee, during an inspection of records conducted by GSA as part of that agency's responsibility to recommend improvements in records management practices and programs, under authority of 44 U.S.C. 2904 and 2906. Such disclosure shall be made in accordance with the GSA regulations governing inspection of records for this purpose, and any other relevant (i.e., GSA or Commerce) directive. Such disclosure shall not be used to make determinations about indivi duals.

8. A record from this system of records may be disclosed, as a routine use, to the public after either publication of the application pursuant to 35 U.S.C. 122(b) or issuance of a patent pursuant to 35 U.S.C. 151. Further, a record may be disclosed, subject to the limitations of 37 CFR 1.14, as a routine use, to the public if the record was filed in an application which became abandoned or in which the proceedings were terminated and which application is referenced by either a published application, an application open to public inspections or an issued patent.

9. A record from this system of records may be disclosed, as a routine use, to a Federal, State, or local law enforcement agency, if the USPTO becomes aware of a violation or potential violation of law or regulation.

UNITED STATES PATENT AND TRADEMARK OFFICE

Commissioner for Patents
United States Patent and Trademark Office
P.O. Box 1450
Alexandria, VA 22313-1450
www.uspto.gov

In re Application of
Serengulam V. Govindan

Application No. 13164275

Filed: June 20,2011

Attorney Docket No. IMM194US7

:DECISION ON PETITION TO MAKE SPECIAL
:UNDER 37 CFR 1.102(c)(1)

This is a decision on the electronic petition under 37 CFR 1.102 (c)(1), filed 19-SEP-2011 to make the above-identified application special based on applicant's age as set forth in MPEP § 708.02, Section IV.

The petition is **GRANTED**.

A grantable petition to make an application special under 37 CFR 1.102(c)(1), MPEP § 708.02, Section IV: Applicant's Age must include a statement by applicant or a registered practitioner having evidence that applicant is at least 65 years of age. No fee is required.

Accordingly, the above-identified application has been accorded "special" status and will be taken up for action by the examiner upon the completion of all pre-examination processing.

Telephone inquiries concerning this electronic decision should be directed to the Electronic Business Center at 866-217-9197.

All other inquiries concerning either the examination or status of the application should be directed to the Technology Center.

UNITED STATES PATENT AND TRADEMARK OFFICE

Commissioner for Patents
United States Patent and Trademark Office
P.O. Box 1450
Alexandria, VA 22313-1450
www.uspto.gov

STETINA BRUNDA GARRED & BRUCKER
75 ENTERPRISE, SUITE 250
ALISO VIEJO CA 92656

MAILED
APR 10 2012
OFFICE OF PETITIONS

In re Application of	:	
He et al.	:	DECISION ON PETITION
Application No. 13/164,453	:	TO WITHDRAW
Filed: June 20, 2011	:	FROM RECORD
Attorney Docket No. RFTEL-003A	:	

This is a decision on the Request to Withdraw as attorney or agent of record under 37 C.F.R. § 1.36(b), filed March 16, 2012.

The request is **NOT APPROVED**.

The Office will only accept correspondence address changes to the most current address information provided for the assignee of the entire interest *who properly became of record under 37 CFR 3.71,* or, if no assignee of the entire interest has properly been made of record, the most current address information provided for the first named inventor. 37 CFR 3.71(c) states:

> ***An assignee becomes of record either in a national patent application or a reexamination proceeding by filing a statement in compliance with § 3.73(b) that is signed by a party who is authorized to act on behalf of the assignee.***

Therefore, as there is currently no Statement under 37 CFR 3.73(b) of record in the instant application, the Office cannot change the correspondence address to the address on the Request to Withdraw.

All future communications from the Office will continue to be directed to the above-listed address until otherwise notified by applicant.

Currently, there is no outstanding Office action that requires a reply.

Telephone inquiries concerning this decision should be directed to the undersigned at (571) 272-7751.

/Joan Olszewski/
Joan Olszewski
Petitions Examiner
Office of Petitions

UNITED STATES PATENT AND TRADEMARK OFFICE

Commissioner for Patents
United States Patent and Trademark Office
P.O. Box 1450
Alexandria, VA 22313-1450
www.uspto.gov

STETINA BRUNDA GARRED & BRUCKER
75 ENTERPRISE, SUITE 250
ALISO VIEJO CA 92656

MAILED

APR 09 2012

OFFICE OF PETITIONS

In re Application of

Ziming He et al.
Application No. 13/164,467
Filed: June 20, 2011
Attorney Docket No. **RFTEL-008A**

DECISION ON PETITION
TO WITHDRAW
FROM RECORD

This is a decision on the Request to Withdraw as attorney or agent of record under 37 CFR § 1.36(b), filed March 16, 2012.

The request is **NOT APPROVED**.

The request cannot be approved because the requested change in the correspondence address is improper.

The Office will only accept correspondence address changes to the most current address information provided for the assignee of the entire interest *who properly became of record under 37 CFR 3.71,* or, if no assignee of the entire interest has properly been made of record, the most current address information provided for the first named inventor. 37 CFR 3.71(c) states:

> ***An assignee becomes of record either in a national patent application or a reexamination proceeding by filing a statement in compliance with § 3.73(b) that is signed by a party who is authorized to act on behalf of the assignee.***

Therefore, as there is currently no Statement under 37 CFR 3.73(b) with the current assignee information of record in the instant application, the Office cannot change the correspondence address to the address on the Request to Withdraw at this present time.

All future communications from the Office will continue to be directed to the above-listed address until otherwise notified by applicant.

Telephone inquires concerning this decision should be directed to JoAnne Burke at 571-272-4584.

/JoAnne Burke/
JoAnne Burke
Petitions Examiner
Office of Petitions

UNITED STATES PATENT AND TRADEMARK OFFICE

Commissioner for Patents
United States Patent and Trademark Office
P.O. Box 1450
Alexandria, VA 22313-1450
www.uspto.gov

WAI MUN LEE
511 HAMILTON AVE
MILPITAS CA 95035

MAILED
JUL 19 2011
OFFICE OF PETITIONS

In re Application of	:	
Wai Mun Lee	:	
Application No. 13/164,474	:	DECISION ON PETITION
Filed: June 20, 2011	:	TO MAKE SPECIAL UNDER
Attorney Docket No. 091708-0001CIP	:	37 CFR 1.102(c)(1)
	:	

This is a decision on the petition under 37 CFR 1.102(c)(1), filed June 21, 2011, to make the above-identified application special based on applicant's age as set forth in M.P.E.P. § 708.02, Section IV.

The petition is **GRANTED**.

A grantable petition to make an application special under 37 CFR 1.102(c)(1) and MPEP § 708.02, Section IV: Applicant's Age must be accompanied by evidence showing that at least one of the applicants is 65 years of age, or more, such as a birth certificate or a statement by applicant. No fee is required

The instant petition includes a statement for the applicant declaring that he/she is 65 years of age or older. Accordingly, the above-identified application has been accorded "special" status.

Telephone inquiries concerning this decision should be directed to Terri Johnson at 571-272-2991.

All other inquiries concerning either the examination or status of the application should be directed to the Technology Center.

The application is being forwarded to the Technology Center Art Unit 1761 for action on the merits commensurate with this decision.

/Terri Johnson/
Terri Johnson
Petitions Examiner
Office of Petitions

Doc Code: PET.GREEN
Document Description: Petition for Green Tech Pilot

PTO/SB/420 (03-11)

PETITION TO MAKE SPECIAL UNDER THE GREEN TECHNOLOGY PILOT PROGRAM

Attorney Docket Number: 249146	Application Number (if known): 13/164,482	Filing date: 06-20-2011

First Named Inventor: Michael James Luneau

Title: UNITARY SUPPORT FRAME FOR USE IN WIND TURBINES AND METHODS FOR FABRICATING SAME

APPLICANT HEREBY REQUESTS TO PARTICIPATE IN THE GREEN TECHNOLOGY PILOT PROGRAM FOR THE ABOVE-IDENTIFIED APPLICATION. See Instruction Sheet on page 2.

This petition must be timely filed electronically using the USPTO electronic filing system, EFS-Web.

1. By filing this petition:

   Applicant is requesting early publication: Applicant hereby requests early publication under 37 CFR 1.219 and the publication fee set forth in 37 CFR 1.18(d) accompanies this request.

2. By filing this petition: applicant is agreeing to make an election without traverse in a telephonic interview and elect an invention that meets the eligibility requirements for the Green Technology Pilot Program, if the Office determines that the claims are not obviously directed to a single invention. See Instruction Sheet.

3. This request is accompanied by statements of special status for the eligibility requirement.

4. The application contains no more than three (3) independent claims and twenty (20) total claims.

5. The application does not contain any multiple dependent claims.

6. Other attachments: Statement Concerning the Basis for the Special Status

Signature /Allison W. Mages/	Date October 10, 2011
Name (Print/Typed) Allison W. Mages	Registration Number 57,275

Note: Signatures of all the inventors or assignees of record of the entire interest or their representative(s) are required in accordance with 37 CFR 1.33 and 11.18. Please see 37 CFR 1.4(d) for the form of the signature. If necessary, submit multiple forms for more than one signature, see below.*

☐ *Total of _____ forms are submitted.

If you need assistance in completing the form, call 1-800-PTO-9199 and select option 2.

IN THE UNITED STATES PATENT AND TRADEMARK OFFICE

First Named Inventor: Michael James Luneau	)
Confirmation No.: 1877	)
	)
Serial No.: 13/164,482	)
	)
Filing Date: 06-20-2011	)
	)
Atty Docket No.: 249146	)

VIA EFS
Commissioner for Patents
P.O. Box 1450
Alexandria, VA 22313-1450

Statement Concerning the Basis for the Special Status

SIR:

The application relates generally to wind turbines and, more particularly, to a support frame for use in wind turbines and methods for fabricating a support frame. (See [0001]).

Applicant respectfully submits that Special Status is sought on the basis that the present invention materially contributes to the discovery or development of renewable energy resources.

The undersigned representative may be contacted at the number below to facilitate the resolution of any matters. Please charge any fees that are incurred in connection with this Statement to deposit account no. 09-0470.

Respectfully submitted,

General Electric Company

By : /Allison W. Mages/
Allison W. Mages
Reg. No. 57,275

Dated: October 10, 2011

GE Global Patent Operation
2 Corporate Drive, Suite 648
Shelton, CT 06484
203-944-6730

UNITED STATES PATENT AND TRADEMARK OFFICE

Commissioner for Patents
United States Patent and Trademark Office
P.O. Box 1450
Alexandria, VA 22313-1450
www.uspto.gov

KNOBBE MARTENS OLSON & BEAR LLP
2040 MAIN STREET
FOURTEENTH FLOOR
IRVINE CA 92614

MAILED
MAR 12 2012
OFFICE OF PETITIONS

In re Application of
Iwasaki et al.
Application No.: 13/164,601
Filed: June 20, 2011
Attorney Docket No. SUTOSH.851AUS
For: MAGNETIC RECORDING MEDIUM, METHOD OF MANUFACTURING THE SAME, AND MAGNETIC RECORDING/REPRODUCTION APPARATUS

: DECISION ON REQUEST TO
: PARTICIPATE IN THE PATENT
: PROSECUTION HIGHWAY
: PROGRAM AND PETITION
: TO MAKE SPECIAL UNDER
: 37 CFR 1.102(a)

This is a decision on the request to participate in the Patent Prosecution Highway (PPH) program and the petition under 37 CFR 1.102(a), filed January 19, 2012, to make the above-identified application special.

The request and petition are **GRANTED**.

Discussion

A grantable request to participate in the PPH pilot program and petition to make special require:

1. The U.S. application is
   a. a Paris Convention application which either
      i. validly claims priority under 35 U.S.C. 119(a) and 37 CFR 1.55 to one or more applications filed in the JPO, or
      ii. validly claims priority to a PCT application that contains no priority claims, or
   b. a national stage application under the PCT (an application which entered the national stage in the U.S. from a PCT international application after compliance with 35 U.S.C. 371), which PCT application
      i. validly claims priority to an application filed in the JPO, or
      ii. validly claims priority to a PCT application that contains no priority claims, or
      iii. contains no priority claim, or
   c. a so-called bypass application filed under 35 U.S.C. 111(a) which validly claims benefit under 35 U.S.C. 120 to a PCT application, which PCT application
      i. validly claims priority to an application filed in the JPO, or

ii. validly claims priority to a PCT application that contains no priority claims, or
iii. contains no priority claim;

2. Applicant must submit a copy of:
   a. The allowable/patentable claim(s) from the JPO application(s);
   b. An English translation of the allowable/patentable claim(s) and
   c. A statement that the English translation is accurate;

3. Applicant must:
   a. Ensure all the claims in the U.S. application must sufficiently correspond or be amended to sufficiently correspond to the allowable/patentable claim(s) in the JPO application(s) and
   b. Submit a claims correspondence table in English;

4. Examination of the U.S. application has not begun;

5. Applicant must submit:
   a. Documentation of prior office action:
      i. a copy of the office action(s) just prior to the "Decision to Grant a Patent" from each of the JPO application(s) containing the allowable/patentable claim(s) or
      ii. if the allowable/patentable claims(s) are from a "Notification of Reasons for Refusal" then the Notification of Reasons for Refusal or
      iii. if the JPO application is a first action allowance then no office action from the JPO is necessary should be indicated on the request/petition form;
   b. An English language translation of the JPO Office action from (5)(a)(i)-(ii) above
   c. A statement that the English translation is accurate;

6. Applicant must submit:
   a. An IDS listing the documents cited by the JPO examiner in the JPO office action (unless already submitted in this application)
   b. Copies of the documents except U.S. patents or U.S. patent application publications (unless already submitted in this application);

The request to participate in the PPH pilot program and petition comply with the above requirements. Accordingly, the above-identified application has been accorded "special" status.

Inquiries concerning this decision should be directed to Petitions Examiner Liana Walsh at (571) 272-3206.

All other inquiries concerning the examination or status of the application is accessible in the PAIR system at http://www.uspto.gov/ebc.index.html.

This application will be forwarded to the examiner for action on the merits commensurate with this decision once this application's formality reviews have been completed.

/dab/
David Bucci
Petitions Examiner
Office of Petitions

Doc code : PET.OP.AGE
Description : Petition to make special based on Age/Health

PTO/SB/130 (07-09)
Approved for use through 07/31/2012. OMB 0651- 0031
U.S. Patent and Trademark Office; U.S. DEPARTMENT OF COMMERCE
Under the Paperwork Reduction Act of 1995, no persons are required to respond to a collection of information unless it contains a valid OMB control number

PETITION TO MAKE SPECIAL BASED ON AGE FOR ADVANCEMENT OF EXAMINATION UNDER 37 CFR 1.102(c)(1)

Application Information

Application Number	13/164,602	Confirmation Number	2088	Filing Date	2011-06-20
Attorney Docket Number (optional)	31586.02	Art Unit		Examiner	
First Named Inventor	RICHARD J. STURZEBECHER				
Title of Invention	CAPACITOR FORMING METHOD				

Attention: Office of Petitions
An application may be made special for advancement of examination upon filing of a petition showing that the applicant is 65 years of age, or more. No fee is required with such a petition. See 37 CFR 1.102(c)(1) and MPEP 708.02 (IV).

APPLICANT HEREBY PETITIONS TO MAKE SPECIAL FOR ADVANCEMENT OF EXAMINATION IN THIS APPLICATION UNDER 37 CFR 1.102(c)(1) and MPEP 708.02 (IV) ON THE BASIS OF THE APPLICANT'S AGE.

A grantable petition requires one of the following items:
(1) Statement by one named inventor in the application that he/she is 65 years of age, or more; or
(2) Certification by a registered attorney/agent having evidence such as a birth certificate, passport, driver's license, etc. showing one named inventor in the application is 65 years of age, or more.

Name of Inventor who is 65 years of age, or older

Given Name	Middle Name	Family Name	Suffix
RICHARD	J.	STURZEBWCHER	

A signature of the applicant or representative is required in accordance with 37 CFR 1.33 and 10.18.
Please see 37 CFR 1.4(d) for the format of the signature.

Select (1) or (2) :

○ (1) I am an inventor in this application and I am 65 years of age, or more.

● (2) I am an attorney or agent registered to practice before the Patent and Trademark Office, and I certify that I am in possession of evidence, and will retain such in the application file record, showing that the inventor listed above is 65 years of age, or more.

Signature	/DOLPH H. TORRENCE/	Date (YYYY-MM-DD)	2011-06-20
Name	DOLPH H. TORRENCE	Registration Number	34501

PTO/SB/130 (07-09)
Approved for use through 07/31/2012. OMB 0651- 0031
U.S. Patent and Trademark Office; U.S. DEPARTMENT OF COMMERCE
Under the Paperwork Reduction Act of 1995, no persons are required to respond to a collection of information unless it contains a valid OMB control number

Privacy Act Statement

The Privacy Act of 1974 (P.L. 93-579) requires that you be given certain information in connection with your submission of the attached form related to a patent application or patent. Accordingly, pursuant to the requirements of the Act, please be advised that: (1) the general authority for the collection of this information is 35 U.S.C. 2(b)(2); (2) furnishing of the information solicited is voluntary; and (3) the principal purpose for which the information is used by the U.S. Patent and Trademark Office is to process and/or examine your submission related to a patent application or patent. If you do not furnish the requested information, the U.S. Patent and Trademark Office may not be able to process and/or examine your submission, which may result in termination of proceedings or abandonment of the application or expiration of the patent.

The information provided by you in this form will be subject to the following routine uses:

1. The information on this form will be treated confidentially to the extent allowed under the Freedom of Information Act (5 U.S.C. 552) and the Privacy Act (5 U.S.C. 552a). Records from this system of records may be disclosed to the Department of Justice to determine whether the Fr eedom of Information Act requires disclosure of these records.

2. A record from this system of records may be disclosed, as a routine use, in the course of presenting evidence to a court, magistrate, or administrative tribunal, including disclosures to opposing counsel in the course of settlement negotiations.

3. A record in this system of records may be disclosed, as a routine use, to a Member of Congress submitting a request involving an individual, to whom the record pertains, when the individual has requested assistance from the Member with respect to the subject matter of the record.

4. A record in this system of records may be disclosed, as a routine use, to a contractor of the Agency having need for the information in order to perform a contract. Recipients of information shall be required to comply with the requirements of the Privacy Act of 1974, as amended, pursuant to 5 U.S.C. 552a(m).

5. A record related to an International Application filed under the Patent Cooperation Treaty in this system of records may be disclosed, as a routine use, to the International Bureau of the World Intellectual Property Organization, pursuant to the Patent Cooperation Treaty.

6. A record in this system of records may be disclosed, as a routine use, to another federal agency for purposes of National Security review (35 U.S.C. 181) and for review pursuant to the Atomic Energy Act (42 U.S.C. 218(c)).

7. A record from this system of records may be disclosed, as a routine use, to the Administrator, General Services, or his/her designee, during an inspection of records conducted by GSA as part of that agency's responsibility to recommend improvements in records management practices and programs, under authority of 44 U.S.C. 2904 and 2906. Such disclosure shall be made in accordance with the GSA regulations governing inspection of records for this purpose, and any other relevant (i.e., GSA or Commerce) directive. Such disclosure shall not be used to make determinations about indivi duals.

8. A record from this system of records may be disclosed, as a routine use, to the public after either publication of the application pursuant to 35 U.S.C. 122(b) or issuance of a patent pursuant to 35 U.S.C. 151. Further, a record may be disclosed, subject to the limitations of 37 CFR 1.14, as a routine use, to the public if the record was filed in an application which became abandoned or in which the proceedings were terminated and which application is referenced by either a published application, an application open to public inspections or an issued patent.

9. A record from this system of records may be disclosed, as a routine use, to a Federal, State, or local law enforcement agency, if the USPTO becomes aware of a violation or potential violation of law or regulation.

UNITED STATES PATENT AND TRADEMARK OFFICE

Commissioner for Patents
United States Patent and Trademark Office
P.O. Box 1450
Alexandria, VA 22313-1450
www.uspto.gov

In re Application of
RICHARD J. STURZEBECHER

Application No. 13164602

Filed:

Attorney Docket No. 31586.02

:DECISION ON PETITION TO MAKE SPECIAL
:UNDER 37 CFR 1.102(c)(1)

This is a decision on the electronic petition under 37 CFR 1.102 (c)(1), filed 20-JUN-2011 to make the above-identified application special based on applicant's age as set forth in MPEP § 708.02, Section IV.

The petition is **GRANTED**.

A grantable petition to make an application special under 37 CFR 1.102(c)(1), MPEP § 708.02, Section IV: Applicant's Age must include a statement by applicant or a registered practitioner having evidence that applicant is at least 65 years of age. No fee is required.

Accordingly, the above-identified application has been accorded "special" status and will be taken up for action by the examiner upon the completion of all pre-examination processing.

Telephone inquiries concerning this electronic decision should be directed to the Electronic Business Center at 866-217-9197.

All other inquiries concerning either the examination or status of the application should be directed to the Technology Center.

UNITED STATES PATENT AND TRADEMARK OFFICE

Commissioner for Patents
United States Patent and Trademark Office
P.O. Box 1450
Alexandria, VA 22313-1450
www.uspto.gov

BOZICEVIC, FIELD & FRANCIS LLP
1900 UNIVERSITY AVENUE
SUITE 200
EAST PALO ALTO CA 94303

MAILED
SEP 06 2011
OFFICE OF PETITIONS

In re Application of	:	
William A. Garland et al.	:	
Application No. 13/164,686	:	DECISION ON PETITION
Filed: June 20, 2011	:	TO MAKE SPECIAL UNDER
Attorney Docket No. TOSK-015CON	:	37 CFR 1.102(c)(1)
	:	

This is a decision on the petition under 37 CFR 1.102(c)(1), filed August 30, 2011, to make the above-identified application special based on applicant's age as set forth in M.P.E.P. § 708.02, Section IV.

The petition is **GRANTED**.

A grantable petition to make an application special under 37 CFR 1.102(c)(1) and MPEP § 708.02, Section IV: Applicant's Age must be accompanied by evidence showing that at least one of the applicants is 65 years of age, or more, such as a birth certificate or a statement by applicant. No fee is required

The instant petition includes a statement by an attorney on behalf of inventor William A. Garland attesting to his/her age. The above-identified application has been accorded "special" status.

Telephone inquiries concerning this decision should be directed to Kimberly Inabinet at 571-272-4618.

All other inquiries concerning either the examination or status of the application should be directed to the Technology Center.

Upon completion of the pre-examination processing by the Office of Patent Application Processing, this application will be referred to Technology Center 1653 for action on the merits commensurate with this decision.

/Kimberly Inabinet/

Kimberly Inabinet
Petitions Examiner
Office of Petitions

UNITED STATES PATENT AND TRADEMARK OFFICE

UNITED STATES DEPARTMENT OF COMMERCE
United States Patent and Trademark Office
Address: COMMISSIONER FOR PATENTS
P.O. Box 1450
Alexandria, Virginia 22313-1450
www.uspto.gov

APPLICATION NO.	FILING DATE	FIRST NAMED INVENTOR	ATTORNEY DOCKET NO.	CONFIRMATION NO.
13/164,770	06/20/2011	InScon YOO	Q124961	2442

23373 7590 09/28/2011
SUGHRUE MION, PLLC
2100 PENNSYLVANIA AVENUE, N.W.
SUITE 800
WASHINGTON, DC 20037

EXAMINER
MOAZZAMI, NASSER G

ART UNIT	PAPER NUMBER
2436	

NOTIFICATION DATE	DELIVERY MODE
09/28/2011	ELECTRONIC

Please find below and/or attached an Office communication concerning this application or proceeding.

The time period for reply, if any, is set in the attached communication.

Notice of the Office communication was sent electronically on above-indicated "Notification Date" to the following e-mail address(es):

sughrue@sughrue.com
PPROCESSING@SUGHRUE.COM
USPTO@SUGHRUE.COM

UNITED STATES PATENT AND TRADEMARK OFFICE

COMMISSIONER FOR PATENTS
UNITED STATES PATENT AND TRADEMARK OFFICE
WASHINGTON, DC 20231
www.uspto.gov

Fadi Kiblawi
Sughrue Mion, PLLC
2100 Pennsylvania Avenue, N.W.
Suite 800
Washington DC 20037

In re Application of:
Yoo
Serial No.: 13/164770
Filed: June 20, 2011
Docket: Q124961
For: **Anti-Malware System and Operating Method Thereof**

DECISION ON PETITION TO MAKE SPECIAL FOR NEW APPLICATION UNDER 37 C.F.R. § 1.102 & M.P.E.P. § 708.02

This is a decision on the petition filed on June 20, 2011 to make the above-identified application special for accelerated examination procedure under 37 C.F.R. § 1.102(d).

The petition to make the application special is **DISMISSED**.

REGULATION AND PRACTICE

A grantable petition to make special under 37 C.F.R. § 1.102(d) and pursuant to the "Change to Practice for Petitions in Patent Applications to Make Special and for Accelerated Examination" published in the Federal Register on June 26, 2006 (71 Fed. Reg. 36323), must satisfy the following conditions:

I. Conditions Regarding the Application:

1. the application must be a non-reissue utility or design application filed under 37 CFR 1.111(a);
2. the application, the petition and the required fees must be filed electronically using the USPTO's electronic filing system (EFS), or EFS-web; if not filed electronically, a statement asserting that EFS and EFS-web were not available during the normal business hours.
3. at the time of filing, the application must be complete under 37 CFR 1.51 and in condition for examination;
4. the application must contain three or fewer independent claims and twenty or fewer total claims and the claims must be directed to a single invention.

II. Conditions Regarding the Petition:

The petition must:

1. be filed with the application;

2. include a statement that applicant agrees not to separately argue the patentability of any independent claim during any appeal in the application;

3. include a statement that applicant agrees to make an election without traverse in a telephone interview.

4. include a statement that applicant agrees to conduct such an interview when requested by the examiner.

5. include a statement, made based on a good faith belief, that a preexamination search in compliance with the following requirements, was conducted, including an identification of the filed of search by United States class and subclass, where applicable, and for database searches, the search logic or chemical structure or sequence used as a query, the name of the file(s) searched and the database service, and the date of the search.

The preexamination search must:

5.1 involve U.S. patents and patent application publications, foreign patent documents, and non-patent literature, unless the applicant can justify with reasonable certainty that no references more pertinent than those already identified are likely to be found in the eliminated sources and includes such a justification with this statement;

5.2. be directed to the claimed invention and encompass all of the features of the claims, giving the claims the broadest reasonable interpretation;

5.3. encompass the disclosed features that may be claimed.

6. must provide in support of the petition an accelerated examination support document.

An accelerated examination support document must include:

6.1. an information disclosure statement (IDS) in compliance with 37 CFR 1.98 citing each reference deemed most closely related to the subject matter of each of the claims;

6.2. an identification of all the limitations in the claims that are disclosed by the reference specifying where the limitation is disclosed in the cited reference;

6.3. a detailed explanation of how each of the claims are patentable over the references cited with particularity required by 37 CFR 1.111(b) and (c);

6.4. a concise statement of the utility of the invention as defined in each of the independent claims (unless the application is a design application);

6.5. a showing of where each limitation of the claims finds support under 35 USC 112, first paragraph, in the written description of the specification. If applicable, the showing must also identify: (1) each means- (or step) plus-function claim element that invokes consideration under 35 UDC 112, sixth paragraph; and (2) the structure, material, or acts in the specification that corresponds to each means- (or step) plus-function claim element that invokes consideration under 35 UDC 112, sixth paragraph; if the application claims the benefit of one or more applications under title 35, United States Code, the showing must also include where each limitation of the claims finds support under 35 USC 112, first paragraph, in each such application in which such supports exists;

6.6. an identification of any cited references that may be disqualified under 35 USC 103(c).

REVIEW OF FACTS

The conditions I 1-4, II 1-4 and II 5.1- 5.3, II 6.1-6.2, 6.4 and 6.6 above are considered to have been met. However, the petition fails to comply with conditions II 6.3 and 6.5 above. Therefore, the petition fails to meet the required conditions to be accorded special status under the accelerated examination procedure.

Regarding the requirement of MPEP § 708.02(a)(I.)(3) and items II. 6.3. above, the detailed explanation of how each of the claims are patentable over the references cited with particularity required by 37 CFR 1.111(b) and (c) is improper as while the petition discusses in great detail how certain claim features are not anticipated by the cited references except for Won-Jip discussed below however the petition is silent with respect to the references in combination rendering non obvious any of these claim features. Additionally, the discussion of Won-Jip fails to clearly explain how the reference doesn't disclose the same processor performing filtering and scanning as the firewall engine appears to do both.

Regarding the requirement of MPEP § 708.02(a)(I.)(5) and item II. 6.5 above, the preexamination support document fails to provide a showing of the 112 1st support for each and every claim feature in the written description of the parent applications 61/453290 and Korean applications 10-2010-0057824, 10-2010-0070428 and 10-2011-0054160 that this application claims benefit of. Many features claim for many claims are not mapped to all priority documents. See claim 6-11 for example. The cited drawings of '824 do not support the claims as alleged.

Additionally, the cited sections of this application of paragraphs 44-53, 78 and 84 do not appear to teach the filtering and scanning at the **same time**. The priority documents also fail to teach this.

DECISION

For the above-stated reasons, the petition is **dismissed**. The application will therefore be taken up by the examiner for action in its regular turn.

Petitioner is given a single opportunity to perfect the petition. Any request for reconsideration of this decision must be submitted within 1 (one) month or 30 (thirty) days, whichever is longer, (no extension of time under 37 CFR 1.136(a)) from the date of this decision in order to be considered timely. Any request for reconsideration must address the deficiencies indicated above.

Petitioner is reminded that, upon granting of the special status of the application on request for reconsideration, the application will be processed expeditiously. However, due to the dismissal of the instant petition, examination may not be completed within twelve months of the filing date of the application.

A courtesy phone call or email (tod.swann@uspto.gov) stating that a renewed petition has been filed is requested upon refiling of the petition. This will speed up the deciding of the second petition.

Any inquiry regarding this decision should be directed to Tod Swann, Quality Assurance Specialist, at (571) 272-3612. A second point of Contact is Chris Grant at (571)-272-7294.

/Tod Swann/

Tod R Swann, WQAS 2430
Technology Center 2400
Networking, Multiplex, Cable and Information Security

UNITED STATES PATENT AND TRADEMARK OFFICE

UNITED STATES DEPARTMENT OF COMMERCE
United States Patent and Trademark Office
Address: COMMISSIONER FOR PATENTS
P.O. Box 1450
Alexandria, Virginia 22313-1450
www.uspto.gov

APPLICATION NO.	FILING DATE	FIRST NAMED INVENTOR	ATTORNEY DOCKET NO.	CONFIRMATION NO.
13/164,770	06/20/2011	InSeon YOO	Q124961	2442

23373 7590 11/09/2011
SUGHRUE MION, PLLC
2100 PENNSYLVANIA AVENUE, N.W.
SUITE 800
WASHINGTON, DC 20037

EXAMINER
MOAZZAMI, NASSER G

ART UNIT	PAPER NUMBER
2436	

NOTIFICATION DATE	DELIVERY MODE
11/09/2011	ELECTRONIC

Please find below and/or attached an Office communication concerning this application or proceeding.

The time period for reply, if any, is set in the attached communication.

Notice of the Office communication was sent electronically on above-indicated "Notification Date" to the following e-mail address(es):

USPTO@sughrue.com
sughrue@sughrue.com
PPROCESSING@SUGHRUE.COM

UNITED STATES PATENT AND TRADEMARK OFFICE

COMMISSIONER FOR PATENTS
UNITED STATES PATENT AND TRADEMARK OFFICE
WASHINGTON, DC 20231
www.uspto.gov

Fadi Kiblawi
Sughrue Mion, PLLC
2100 Pennsylvania Avenue, N.W.
Suite 800
Washington DC 20037

In re Application of:
Yoo
Serial No.: 13/164770
Filed: June 20, 2011
Docket: Q124961
For: **Anti-Malware System and Operating Method Thereof**

DECISION ON PETITION TO MAKE SPECIAL FOR NEW APPLICATION UNDER 37 C.F.R. § 1.102 & M.P.E.P. § 708.02

This is a decision on the petition re-filed on October 28, 2011 to make the above-identified application special for accelerated examination procedure under 37 C.F.R. § 1.102(d). The original petition was filed on June 20, 2011 and dismissed on September 27 2011.

The petition to make the application special is **GRANTED** as papers filed on October 28, 2011 and filed originally meet the requirements of 37 C.F.R. § 1.102(d) and MPEP 708.02(a) as the 35 USC 112 1st support and the explanation of patentability are now proper.

The prosecution of the instant application will be conducted expeditiously according to the following guidelines.

The application will be docketed to an examiner and taken up for action within two weeks of the date of this decision.

1. Restriction Practice:
If the examiner determines that the claims are not directed to a single invention, a telephone request to elect one single invention will be made pursuant to MPEP 812.01. As a prerequisite to the grant of this petition, the applicant has agreed to make an oral election, by telephone, without traverse. If the applicant refuses to make an election without traverse, or the examiner cannot reach the applicant after a reasonable effort, the examiner will treat the first claimed invention (invention defined by claim 1) as having being constructively elected without traverse for examination.

2. Office action:

If it is determined that, after appropriate consultation, there is a potential rejection or any other issue to be addressed, the examiner will telephone the applicant and arrange an interview to discuss and resolve the issue. An Office action, other than a Notice of Allowance and Fee(s) Due (Notice of Allowance), will not be issued unless either: 1) an interview was conducted but did not result in agreed to action that places the application in condition for allowance, or, 2) a determination is made that an interview would be unlikely to result in the application being placed in condition for allowance, and 3) an internal conference has been held to review any rejection of any claim.

3. Time for Reply:
An Office action other than a Notice of Allowance or a final Office action will set a shortened statutory period of one month or thirty days, whichever is longer, for reply with no extension of time available under 37 CFR 1.136(a). Failure to timely file a reply within this non-extendible period for reply will result in the abandonment of the application.

4. Reply by Applicant:
A timely reply to an Office action other than the Notice of Allowance must be submitted electronically via EFS or EFS-web and limited to addressing the rejections, objections and requirement made. Any amendment that attempts to: 1) add claims which would result in more than three pending independent claims or more than twenty pending total claims; 2) present claims not encompassed by the pre-examination search or an updated accelerated examination support document; or 3) present claims that are directed a non-elected invention or an invention other than that previously claimed and examined in the application, will be treated as not fully responsive and will not be entered.

For any amendment to the claims (including any new claim) that is not encompassed by the accelerated examination support document, applicant must provide an updated accelerated examination support document that encompasses the amended or new claims at the time of filing of the amendment.

To proceed expeditiously with the examination, it is recommended that a reply with amendments made to any claim or with any new claim being added be accompanied by an updated accelerated examination support document or a statement explaining how the amended or new claim is supported by the original accelerated examination support document.

5. Information Disclosure Statement (IDS):
Any IDS filed during prosecution must be submitted electronically via EFS or EFS-web, accompanied by an updated accelerated examination support document, and be in compliance with 37 CFR 1.97 and 1.98.

6. Post-Allowance Processing:
To expedite processing of the allowed application into a patent, the applicant must: 1) pay the required fees within one month of the date of the Notice of Allowance, and 2) not file any post allowance papers not required by the Office. In no event may the issue fee be paid and accepted later than three months from the date of the Notice of Allowance.

7. After-Final and Appeal Procedures:
To expedite prosecution, after receiving the final Office action, applicant must: 1) promptly file a notice of appeal, an appeal brief and appeal fees; and 2) not request a pre-appeal brief conference.

Any amendment, affidavit or other evidence filed after final Office action must comply with applicable rules and the requirements outlined in numbered paragraphs 5 and 6 above.

On appeal, the application will proceed according to normal appeal procedures. After appeal, the application will again be treated special.

8. Proceedings Outside the Normal Examination Process:
If the application becomes involved in a proceeding that is outside the normal examination process (e.g., a secrecy order, national security review, interference proceeding, petitions under 37 CFR 1.181, 182 or 183), the application will be treated special before and after such proceeding.

9. Final Disposition:
The twelve month goal of this accelerated examination procedure ends with a final disposition. The mailing of a final Office action, a Notice of Allowance, the filing of a Notice of Appeal, or the filing of a Request for Continued Examination (RCE) is the final disposition.

If, during prosecution, a paper is not filed electronically using EFS-web, a reply is filed but is not fully responsive, the application is involved in an appeal, or a proceeding outside normal examination process, the application will still be examined expeditiously, however, the final disposition may occur more than twelve months from the filing of the application.

Any inquiry regarding this decision should be directed to Tod Swann, Quality Assurance Specialist, at (571) 272-3612. A second point of Contact is Chris Grant at (571)-272-7294.

/Tod Swann/
Tod R Swann, WQAS 2430
Technology Center 2400
Networking, Multiplex, Cable and Information Security

UNITED STATES PATENT AND TRADEMARK OFFICE

Commissioner for Patents
United States Patent and Trademark Office
P.O. Box 1450
Alexandria, VA 22313-1450
www.uspto.gov

In re Application of
Miguel Correa

Application No. 13164794

Filed:

Attorney Docket No. LF11-FLUT-16

:DECISION ON PETITION TO MAKE SPECIAL
:UNDER 37 CFR 1.102(c)(1)

This is a decision on the electronic petition under 37 CFR 1.102 (c)(1), filed 21-JUN-2011 to make the above-identified application special based on applicant's age as set forth in MPEP § 708.02, Section IV.

The petition is **GRANTED**.

A grantable petition to make an application special under 37 CFR 1.102(c)(1), MPEP § 708.02, Section IV: Applicant's Age must include a statement by applicant or a registered practitioner having evidence that applicant is at least 65 years of age. No fee is required.

Accordingly, the above-identified application has been accorded "special" status and will be taken up for action by the examiner upon the completion of all pre-examination processing.

Telephone inquiries concerning this electronic decision should be directed to the Electronic Business Center at 866-217-9197.

All other inquiries concerning either the examination or status of the application should be directed to the Technology Center.

Doc code : PET.OP.AGE
Description : Petition to make special based on Age/Health

PTO/SB/130 (07-09)
Approved for use through 07/31/2012. OMB 0651- 0031
U.S. Patent and Trademark Office; U.S. DEPARTMENT OF COMMERCE
Under the Paperwork Reduction Act of 1995, no persons are required to respond to a collection of information unless it contains a valid OMB control number

PETITION TO MAKE SPECIAL BASED ON AGE FOR ADVANCEMENT OF EXAMINATION UNDER 37 CFR 1.102(c)(1)

Application Information

Application Number	13164794	Confirmation Number	2514	Filing Date	
Attorney Docket Number (optional)	LF11-HEXA-15	Art Unit		Examiner	
First Named Inventor	Miguel Correa				
Title of Invention	Polyhedra Building System with Composite walls				

Attention: Office of Petitions
An application may be made special for advancement of examination upon filing of a petition showing that the applicant is 65 years of age, or more. No fee is required with such a petition. See 37 CFR 1.102(c)(1) and MPEP 708.02 (IV).

APPLICANT HEREBY PETITIONS TO MAKE SPECIAL FOR ADVANCEMENT OF EXAMINATION IN THIS APPLICATION UNDER 37 CFR 1.102(c)(1) and MPEP 708.02 (IV) ON THE BASIS OF THE APPLICANT'S AGE.

A grantable petition requires one of the following items:
(1) Statement by one named inventor in the application that he/she is 65 years of age, or more; or
(2) Certification by a registered attorney/agent having evidence such as a birth certificate, passport, driver's license, etc. showing one named inventor in the application is 65 years of age, or more.

Name of Inventor who is 65 years of age, or older

Given Name	Middle Name	Family Name	Suffix
Miguel		Correa	

A signature of the applicant or representative is required in accordance with 37 CFR 1.33 and 10.18.
Please see 37 CFR 1.4(d) for the format of the signature.

Select (1) or (2) :

○ (1) I am an inventor in this application and I am 65 years of age, or more.

● (2) I am an attorney or agent registered to practice before the Patent and Trademark Office, and I certify that I am in possession of evidence, and will retain such in the application file record, showing that the inventor listed above is 65 years of age, or more.

Signature	/Luis Figarella/	Date (YYYY-MM-DD)	2011-06-21
Name	Luis Figarella	Registration Number	58300

PTO/SB/130 (07-09)
Approved for use through 07/31/2012. OMB 0651- 0031
U.S. Patent and Trademark Office; U.S. DEPARTMENT OF COMMERCE
Under the Paperwork Reduction Act of 1995, no persons are required to respond to a collection of information unless it contains a valid OMB control number

Privacy Act Statement

The Privacy Act of 1974 (P.L. 93-579) requires that you be given certain information in connection with your submission of the attached form related to a patent application or patent. Accordingly, pursuant to the requirements of the Act, please be advised that: (1) the general authority for the collection of this information is 35 U.S.C. 2(b)(2); (2) furnishing of the information solicited is voluntary; and (3) the principal purpose for which the information is used by the U.S. Patent and Trademark Office is to process and/or examine your submission related to a patent application or patent. If you do not furnish the requested information, the U.S. Patent and Trademark Office may not be able to process and/or examine your submission, which may result in termination of proceedings or abandonment of the application or expiration of the patent.

The information provided by you in this form will be subject to the following routine uses:

1. The information on this form will be treated confidentially to the extent allowed under the Freedom of Information Act (5 U.S.C. 552) and the Privacy Act (5 U.S.C. 552a). Records from this system of records may be disclosed to the Department of Justice to determine whether the Fr eedom of Information Act requires disclosure of these records.

2. A record from this system of records may be disclosed, as a routine use, in the course of presenting evidence to a court, magistrate, or administrative tribunal, including disclosures to opposing counsel in the course of settlement negotiations.

3. A record in this system of records may be disclosed, as a routine use, to a Member of Congress submitting a request involving an individual, to whom the record pertains, when the individual has requested assistance from the Member with respect to the subject matter of the record.

4. A record in this system of records may be disclosed, as a routine use, to a contractor of the Agency having need for the information in order to perform a contract. Recipients of information shall be required to comply with the requirements of the Privacy Act of 1974, as amended, pursuant to 5 U.S.C. 552a(m).

5. A record related to an International Application filed under the Patent Cooperation Treaty in this system of records may be disclosed, as a routine use, to the International Bureau of the World Intellectual Property Organization, pursuant to the Patent Cooperation Treaty.

6. A record in this system of records may be disclosed, as a routine use, to another federal agency for purposes of National Security review (35 U.S.C. 181) and for review pursuant to the Atomic Energy Act (42 U.S.C. 218(c)).

7. A record from this system of records may be disclosed, as a routine use, to the Administrator, General Services, or his/her designee, during an inspection of records conducted by GSA as part of that agency's responsibility to recommend improvements in records management practices and programs, under authority of 44 U.S.C. 2904 and 2906. Such disclosure shall be made in accordance with the GSA regulations governing inspection of records for this purpose, and any other relevant (i.e., GSA or Commerce) directive. Such disclosure shall not be used to make determinations about indivi duals.

8. A record from this system of records may be disclosed, as a routine use, to the public after either publication of the application pursuant to 35 U.S.C. 122(b) or issuance of a patent pursuant to 35 U.S.C. 151. Further, a record may be disclosed, subject to the limitations of 37 CFR 1.14, as a routine use, to the public if the record was filed in an application which became abandoned or in which the proceedings were terminated and which application is referenced by either a published application, an application open to public inspections or an issued patent.

9. A record from this system of records may be disclosed, as a routine use, to a Federal, State, or local law enforcement agency, if the USPTO becomes aware of a violation or potential violation of law or regulation.

UNITED STATES PATENT AND TRADEMARK OFFICE

Commissioner for Patents
United States Patent and Trademark Office
P.O. Box 1450
Alexandria, VA 22313-1450
www.uspto.gov

KILPATRICK TOWNSEND & STOCKTON LLP
TWO EMBARCADERO CENTER
EIGHTH FLOOR
SAN FRANCISCO CA 94111-3834

MAILED
MAR 22 2012
OFFICE OF PETITIONS

In re Application of
Graham Alan March
Application No.: 13/164,922
Filed: June 21, 2011
Attorney Docket No.: 83494-808254
(000700US)
For: RAPID ONSET LIQUID MIDAZOLAM COMPOSITION FOR BUCCAL ADMINISTRATION

: DECISION ON REQUEST TO
: PARTICIPATE IN THE PATENT
: PROSECUTION HIGHWAY
: PROGRAM AND PETITION
: TO MAKE SPECIAL UNDER
: 37 CFR 1.102(a)

This is a decision on the request to participate in the Patent Prosecution Highway (PPH) program filed on December 29, 2011.

The request and petition are **GRANTED**.

A grantable request to participate in the PPH program and petition to make special require:

(1) The U.S. application must validly claim priority under 35 U.S.C. 119(a) to one or more applications filed in the UK IPO, note where the UK IPO application with similar claims is not the same application from which the U.S. application claims priority that the applicant must identify the relationship between the UK IPO application with similar claims and the UK IPO priority application;

(2) Applicant must submit a copy of:
The allowable/patentable claim(s) from the UK IPO application(s);

(3) Applicant must:
a. Ensure all the claims in the U.S. application must sufficiently correspond or be amended to sufficiently correspond to the allowable/patentable claim(s) in the UK IPO application(s); and
b. Submit a claims correspondence table;

(4) Examination of the U.S. application has not begun;

(5) Applicant must submit:
A copy of all of the office actions from each of the UK IPO application(s) containing the allowable/patentable claims that are the basis for the request or request that the USPTO obtain a copy from the UK IPO. If the USPTO is not able to obtain a copy of all of the

office actions from the UK IPO, the applicant will be notified and requested to provide the necessary documents.

(6) Applicant must submit:

a. An IDS listing the documents cited by the UK IPO examiner in the UK IPO office action (unless already submitted in this application); and
b. Copies of documents except U.S. patents or U.S. patent application publications (unless already submitted in this application)

The request to participate in the PPH program and petition comply with the above requirements. Accordingly, the above-identified application has been accorded "special" status.

This application will be forwarded to the examiner for action on the merits commensurate with this decision once the formalities review has been completed.

Any inquiry regarding this decision should be directed to Irvin Dingle, at (571) 272-3210.

All other inquiries concerning the examination or status of the application is accessible in the PAIR system at http://www.uspto.gov/ebc/index.html.

David Bucci
Petitions Examiner
Office of Petitions

UNITED STATES PATENT AND TRADEMARK OFFICE

Commissioner for Patents
United States Patent and Trademark Office
P.O. Box 1450
Alexandria, VA 22313-1450
www.uspto.gov

In re Application of
Wulf DROGE

Application No. 13165002

Filed:

Attorney Docket No. 58329

:DECISION ON PETITION TO MAKE SPECIAL
:UNDER 37 CFR 1.102(c)(1)

This is a decision on the electronic petition under 37 CFR 1.102 (c)(1), filed 22-JUN-2011 to make the above-identified application special based on applicant's age as set forth in MPEP § 708.02, Section IV.

The petition is **GRANTED**.

A grantable petition to make an application special under 37 CFR 1.102(c)(1), MPEP § 708.02, Section IV: Applicant's Age must include a statement by applicant or a registered practitioner having evidence that applicant is at least 65 years of age. No fee is required.

Accordingly, the above-identified application has been accorded "special" status and will be taken up for action by the examiner upon the completion of all pre-examination processing.

Telephone inquiries concerning this electronic decision should be directed to the Electronic Business Center at 866-217-9197.

All other inquiries concerning either the examination or status of the application should be directed to the Technology Center.

UNITED STATES PATENT AND TRADEMARK OFFICE

Commissioner for Patents
United States Patent and Trademark Office
P.O. Box 1450
Alexandria, VA 22313-1450
www.uspto.gov

WENDEROTH, LIND & PONACK, L.L.P.
1030 15th Street, N.W.,
Suite 400 East
Washington DC 20005-1503

MAILED

NOV 30 2011

OFFICE OF PETITIONS

In re Application of:	:	
Sato et al.	:	
Application No. 13/165030	:	DECISION DISMISSING
Filing or 371(c) Date: 06/21/2011	:	PETITION UNDER
Title of Invention:	:	37 CFR 1.47(a)
EQUALIZING MECHANISM OF	:	
WELDING APPARATUS	:	

This Decision is in response to the "Petition Under 37 C.F.R. 1.47," filed November 4, 2011, to allow the other inventor(s) to proceed with the application on behalf of himself or herself and the nonsigning inventor(s). The petition is properly treated under 37 C.F.R. 1.47(a).

The petition is **dismissed**.

Rule 47 applicant is given TWO (2) MONTHS from the mailing date of this decision to reply, correcting the below-noted deficiencies. Any reply should be entitled "Request for Reconsideration of Petition Under [insert the applicable code section]"; should only address the deficiencies noted below, except that the reply may include an oath or declaration executed by the non-signing inventor[1]. Failure to respond will result in abandonment of the application. Any extensions of time will be governed by 37 CFR 1.136(a).

Background

The above-identified application was filed on June 21, 2011, without an executed oath/ declaration. The Office mailed a Notice to File Missing Parts of Nonprovisional Application on July 6, 2011, requiring *inter alia*, a properly signed oath or declaration.

The present petition

Applicant files the present petition wherein Applicant provides that the nonsigning inventor, Shinichi Kurihara, has refused to sign the declaration for the present application. In support of this assertion, Applicant files a Statement of Facts of Mr. Mitsushisa Yamashita, Principal Administrative Officer of the assignee, wherein Mr. Yamashita provides that he attempted to contact the nonsigning inventor, but was informed that the nonsigning inventor had moved. Mr. Yamashita provides further

[1] There is no fee for the request for reconsideration of petition.

that he was able to speak with a representative of the nonsigning inventor's family, and informed this family member that the assignee required the nonsigning inventor to review a patent application to be filed in the United States, and sign the Declaration for the new patent application. Having not received a reply, Mr. Yamashita again contacted the nonsigning inventor's family and asked whether the nonsigning inventor had agreed to review the application and sign the Declaration, and was informed by the family member of the nonsigning inventor that the nonsigning inventor refused to sign the Declaration.

Applicable Law, Rules and MPEP

A grantable petition under 37 CFR 1.47(a) requires: (1) proof that the non-signing inventor cannot be reached or refuses to sign the oath or declaration after having been presented with the application papers (specification, claims and drawings); (2) an acceptable oath or declaration in compliance with 35 U.S.C. §§ 115 and 116; (3) the petition fee; and (4) a statement of the last known address of the non-signing inventor. Applicant lacks items (1) and (2) set forth above.

As to item (1), and inventor Spelic, the MPEP provides:

> A refusal by an inventor to sign an oath or declaration when the inventor has not been presented with the application papers does not itself suggest that the inventor is refusing to join the application unless it is clear that the inventor understands exactly what he or she is being asked to sign and refuses to accept the application papers. A copy of the application papers should be sent to the last known address of the non-signing inventor, or, if the nonsigning inventor is represented by counsel, to the address of the nonsigning inventor's attorney. The fact that an application may contain proprietary information does not relieve the 37 CFR 1.47 applicant of the responsibility to present the application papers to the inventor if the inventor is willing to receive the papers in order to sign the oath or declaration.

MPEP 409.03(d).

Analysis

Applicant has not presented evidence that a copy of the application papers were sent to the last known address of the non-signing inventor. Applicant must present a copy of the application papers to the nonsigning inventor. Applicant is cautioned that receipt of an application transmitted via email must be demonstrated by Applicant before a petition may be granted. While receipt of an email may be confirmed by the sender, receipt of an email attachment may not be confirmed by the sender. Applicant must present a copy of the application papers to the nonsigning inventor. The MPEP provides

> Proof that a bona fide attempt was made to present a copy of the application papers (specification, including claims, drawings, and oath or declaration) to the nonsigning inventor for signature, but the inventor refused to accept delivery of the papers or expressly stated that the application papers should not be sent, may be sufficient. When there is an express oral refusal, that fact along with the time and place of the

> refusal must be stated in the statement of facts. When there is an express written refusal, a copy of the document evidencing that refusal must be made part of the statement of facts. The document may be redacted to remove material not related to the inventor's reasons for refusal.

MPEP 409.03(d).

In this instance, Applicant provides that the non-signing inventor was asked to review a patent application. However, Applicant must mail the application (specification, claims and drawings), to the last known address of the inventors. That address should be the last known address at which the inventors customarily receive mail. See MPEP § 605.03. Ordinarily, the last known address will be the last known residence of the nonsigning inventor.

Conclusion

The petition is dismissed without prejudice. Applicant must present a copy of the application to the nonsigning inventor before a refusal to join in the application may be alleged.

Further correspondence with respect to this matter should be addressed as follows:

By mail: Director for Patents
PO Box 1450
Alexandria, VA 22313-1450

By FAX: (571) 273-8300
Attn: Office of Petitions

By hand: Customer Service Window
Randolph Building
401 Dulany Street
Alexandria, VA 22314

Telephone inquiries concerning this matter should be directed to the undersigned at (571) 272-3232.

/DLW/

Derek L. Woods
Attorney
Office of Petitions

UNITED STATES PATENT AND TRADEMARK OFFICE

Commissioner for Patents
United States Patent and Trademark Office
P.O. Box 1450
Alexandria, VA 22313-1450
www.uspto.gov

WENDEROTH, LIND & PONACK, L.L.P.
1030 15th Street, N.W.,
Suite 400 East
Washington DC 20005-1503

MAILED

FEB 10 2012

OFFICE OF PETITIONS

In re Application of:	:	
Sato et al.	:	
Application No. 13/165030	:	DECISION GRANTING
Filing or 371(c) Date: 06/21/2011	:	PETITION UNDER
Title of Invention:	:	37 CFR 1.47(a)
EQUALIZING MECHANISM OF	:	
WELDING APPARATUS	:	

This Decision is in response to the Request for Reconsideration of Petition Under 37 C.F.R. 1.47, filed January 30, 2012, to allow the other inventor(s) to proceed with the application on behalf of himself or herself and the nonsigning inventor(s). The petition is properly treated under 37 C.F.R. 1.47(a).

The petition is **granted**.

The above-identified application and papers have been reviewed and found in compliance with 37 CFR 1.47(a). This application is hereby accorded Rule 1.47(a) status.

Petitioner has shown that the non-signing inventor, Shinichi Kanagawa, refuses to join in the application.

As provided in Rule 1.47(a), this Office will forward notice of this application's filing to the non-signing inventor at the addresses given in the Petition. Notice of the filing of this application will also be published in the Official Gazette.

The application file is being referred to Technology Center Art Unit 3742 for examination in the normal course of business.

Telephone inquiries related to this decision may be directed to the undersigned at (571) 272-3232.

/DLW/

Derek L. Woods
Attorney
Office of Petitions

UNITED STATES PATENT AND TRADEMARK OFFICE

Commissioner for Patents
United States Patent and Trademark Office
P.O. Box 1450
Alexandria, VA 22313-1450
www.uspto.gov

MR. SHINICHI KURIHARA
355-30 KOZONO, AYASE-SHI
KANAGAWA 252-1121
JAPAN

MAILED
FEB 10 2012
OFFICE OF PETITIONS

In re Application of:	:	
Sato et al.	:	
Application No. 13/165030	:	LETTER
Filing or 371(c) Date: 06/21/2011	:	
Title of Invention:	:	
EQUALIZING MECHANISM OF	:	
WELDING APPARATUS	:	

Dear Mr. Kurihara:

You are named as a joint inventor in the above-identified United States patent application filed under the provisions of 35 U.S.C. 116 (United States Code) and 37 CFR 1.47(a), Rules of Practice in Patent Cases. Should a patent be granted on the application you will be designated therein as a joint inventor.

As a named inventor you are entitled to inspect any paper in the file wrapper of the application, order copies of all or any part thereof (at a prepaid cost per 37 CFR 1.19) or make your position of record in the application. Alternatively, you may arrange to do any of the preceding through a registered patent attorney or agent presenting written authorization from you. If you care to join the application, counsel of record (see below) would presumably assist you. Joining in the application would entail the filing of an appropriate oath or declaration by you pursuant to 37 CFR 1.63.

Telephone inquiries regarding this communication should be directed to the undersigned at (571) 272-3232. Requests for information regarding your application should be directed to the File Information Unit at (703) 308-2733. Information regarding how to pay for and order a copy of the application, or a specific paper in the application, should be directed to Certification Division at (703) 308-9726 or 1-800-972-6382 (outside the Washington D.C. area).

/DLW/

Derek L. Woods
Attorney
Office of Petitions

CC: WENDEROTH, LIND & PONACK, L.L.P.
1030 15th Street, N.W.,
Suite 400 East
Washington DC 20005-1503

Doc code : PET.OP.AGE
Description : Petition to make special based on Age/Health

PTO/SB/130 (07-09)
Approved for use through 07/31/2012. OMB 0651- 0031
U.S. Patent and Trademark Office; U.S. DEPARTMENT OF COMMERCE
Under the Paperwork Reduction Act of 1995, no persons are required to respond to a collection of information unless it contains a valid OMB control number

PETITION TO MAKE SPECIAL BASED ON AGE FOR ADVANCEMENT OF EXAMINATION UNDER 37 CFR 1.102(c)(1)

Application Information

Application Number	13165044	Confirmation Number	3036	Filing Date	2011-06-21
Attorney Docket Number (optional)	LJO-09U2	Art Unit		Examiner	
First Named Inventor	Dr. Lanny L. Johnson				
Title of Invention	Methods and Devices for Treating Pathological Conditions of the Human Knee				

Attention: Office of Petitions
An application may be made special for advancement of examination upon filing of a petition showing that the applicant is 65 years of age, or more. No fee is required with such a petition. See 37 CFR 1.102(c)(1) and MPEP 708.02 (IV).

APPLICANT HEREBY PETITIONS TO MAKE SPECIAL FOR ADVANCEMENT OF EXAMINATION IN THIS APPLICATION UNDER 37 CFR 1.102(c)(1) and MPEP 708.02 (IV) ON THE BASIS OF THE APPLICANT'S AGE.

A grantable petition requires one of the following items:
(1) Statement by one named inventor in the application that he/she is 65 years of age, or more; or
(2) Certification by a registered attorney/agent having evidence such as a birth certificate, passport, driver's license, etc. showing one named inventor in the application is 65 years of age, or more.

Name of Inventor who is 65 years of age, or older

Given Name	Middle Name	Family Name	Suffix
Dr. Lanny	L.	Johnson	

A signature of the applicant or representative is required in accordance with 37 CFR 1.33 and 10.18.
Please see 37 CFR 1.4(d) for the format of the signature.

Select (1) or (2) :

○ (1) I am an inventor in this application and I am 65 years of age, or more.

● (2) I am an attorney or agent registered to practice before the Patent and Trademark Office, and I certify that I am in possession of evidence, and will retain such in the application file record, showing that the inventor listed above is 65 years of age, or more.

Signature	/Raymond Wagenknecht/	Date (YYYY-MM-DD)	2011-07-28
Name	Raymond Wagenknecht	Registration Number	50948

PTO/SB/130 (07-09)
Approved for use through 07/31/2012. OMB 0651- 0031
U.S. Patent and Trademark Office; U.S. DEPARTMENT OF COMMERCE
Under the Paperwork Reduction Act of 1995, no persons are required to respond to a collection of information unless it contains a valid OMB control number

Privacy Act Statement

The Privacy Act of 1974 (P.L. 93-579) requires that you be given certain information in connection with your submission of the attached form related to a patent application or patent. Accordingly, pursuant to the requirements of the Act, please be advised that: (1) the general authority for the collection of this information is 35 U.S.C. 2(b)(2); (2) furnishing of the information solicited is voluntary; and (3) the principal purpose for which the information is used by the U.S. Patent and Trademark Office is to process and/or examine your submission related to a patent application or patent. If you do not furnish the requested information, the U.S. Patent and Trademark Office may not be able to process and/or examine your submission, which may result in termination of proceedings or abandonment of the application or expiration of the patent.

The information provided by you in this form will be subject to the following routine uses:

1. The information on this form will be treated confidentially to the extent allowed under the Freedom of Information Act (5 U.S.C. 552) and the Privacy Act (5 U.S.C. 552a). Records from this system of records may be disclosed to the Department of Justice to determine whether the Fr eedom of Information Act requires disclosure of these records.

2. A record from this system of records may be disclosed, as a routine use, in the course of presenting evidence to a court, magistrate, or administrative tribunal, including disclosures to opposing counsel in the course of settlement negotiations.

3. A record in this system of records may be disclosed, as a routine use, to a Member of Congress submitting a request involving an individual, to whom the record pertains, when the individual has requested assistance from the Member with respect to the subject matter of the record.

4. A record in this system of records may be disclosed, as a routine use, to a contractor of the Agency having need for the information in order to perform a contract. Recipients of information shall be required to comply with the requirements of the Privacy Act of 1974, as amended, pursuant to 5 U.S.C. 552a(m).

5. A record related to an International Application filed under the Patent Cooperation Treaty in this system of records may be disclosed, as a routine use, to the International Bureau of the World Intellectual Property Organization, pursuant to the Patent Cooperation Treaty.

6. A record in this system of records may be disclosed, as a routine use, to another federal agency for purposes of National Security review (35 U.S.C. 181) and for review pursuant to the Atomic Energy Act (42 U.S.C. 218(c)).

7. A record from this system of records may be disclosed, as a routine use, to the Administrator, General Services, or his/her designee, during an inspection of records conducted by GSA as part of that agency's responsibility to recommend improvements in records management practices and programs, under authority of 44 U.S.C. 2904 and 2906. Such disclosure shall be made in accordance with the GSA regulations governing inspection of records for this purpose, and any other relevant (i.e., GSA or Commerce) directive. Such disclosure shall not be used to make determinations about indivi duals.

8. A record from this system of records may be disclosed, as a routine use, to the public after either publication of the application pursuant to 35 U.S.C. 122(b) or issuance of a patent pursuant to 35 U.S.C. 151. Further, a record may be disclosed, subject to the limitations of 37 CFR 1.14, as a routine use, to the public if the record was filed in an application which became abandoned or in which the proceedings were terminated and which application is referenced by either a published application, an application open to public inspections or an issued patent.

9. A record from this system of records may be disclosed, as a routine use, to a Federal, State, or local law enforcement agency, if the USPTO becomes aware of a violation or potential violation of law or regulation.

UNITED STATES PATENT AND TRADEMARK OFFICE

Commissioner for Patents
United States Patent and Trademark Office
P.O. Box 1450
Alexandria, VA 22313-1450
www.uspto.gov

In re Application of
Lanny L. Johnson

Application No. 13165044

Filed: June 21,2011

Attorney Docket No. LJO-09U2

:DECISION ON PETITION TO MAKE SPECIAL
:UNDER 37 CFR 1.102(c)(1)

This is a decision on the electronic petition under 37 CFR 1.102 (c)(1), filed 28-JUL-2011 to make the above-identified application special based on applicant's age as set forth in MPEP § 708.02, Section IV.

The petition is **GRANTED**.

A grantable petition to make an application special under 37 CFR 1.102(c)(1), MPEP § 708.02, Section IV: Applicant's Age must include a statement by applicant or a registered practitioner having evidence that applicant is at least 65 years of age. No fee is required.

Accordingly, the above-identified application has been accorded "special" status and will be taken up for action by the examiner upon the completion of all pre-examination processing.

Telephone inquiries concerning this electronic decision should be directed to the Electronic Business Center at 866-217-9197.

All other inquiries concerning either the examination or status of the application should be directed to the Technology Center.

UNITED STATES PATENT AND TRADEMARK OFFICE

Commissioner for Patents
United States Patent and Trademark Office
P.O. Box 1450

MAILED

DEC 21 2011

OFFICE OF PETITIONS

SCULLY SCOTT MURPHY & PRESSER, PC
400 GARDEN CITY PLAZA
SUITE 300
GARDEN CITY NY 11530

In re Application of	: DECISION ON REQUEST TO
Keita SUZUKI	: PARTICIPATE IN PPH PROGRAM
Application No. 13/165,105	: AND PETITION TO MAKE SPECIAL
Filed: June 21, 2011	: UNDER 37 CFR 1.102(a)
Atty. Docket No.: 27760Z	:
For: TREATMENT DEVICE FOR ENDOSCOPE	

This is a decision on the request to participate in the Patent Prosecution Highway (PPH) program and the petition under 37 CFR 1.102(a), filed October 7, 2011 to make the above-identified application special.

The petition is **GRANTED**.

A grantable request to participate in the PPH (patent prosecution highway) program and petition to make special require:

(1) the U.S. application is a Paris Convention application which either validly claims priority under 35 U.S.C. 119(a) and 37 CFR 1.55 to one or more applications filed in the JPO (Japanese Patent Office) or claims priority to a PCT application that contains no priority claims. Alternatively, it can be a national stage application under the PCT which validly claims priority to an application filed in the JPO or claims priority to a PCT application that contains no priority claims. It can also be a "bypass application" filed under 35 U.S.C. 111(a) which validly claims benefit under 35 U.S.C. 120 to a PCT application, which PCT application validly claims priority to an application filed in the JPO or claims priority to a PCT application that contains no priority claims, or contains no priority claim;

(2) applicant must submit a copy of the allowable/patentable claim(s) from the JPO application(s) along with an English translation thereof and a statement that the English translation is accurate;

(3) all the claims in the U.S. application must sufficiently correspond or be amended to sufficiently correspond to the allowable/patentable claim(s) in the JPO application(s);

(4) examination of the U.S. application has not begun;

(5) applicant must submit a copy of all the office actions from each of the JPO application(s) containing the allowability/patentable claim(s) along with an English translation thereof and a statement that the English translation is accurate;

(6) applicant must submit an IDS listing the documents cited by the JPO examiner in the JPO office action along with copies of documents except U.S. patents or U.S. patent application publications.

The request to participate in the PPH program and petition comply with the above requirements. Accordingly, the above-identified application has been accorded "special" status.

Telephone inquiries concerning this decision should be directed to Robert DeWitty, Petition Attorney, Office of Petitions at 571-272-8427.

All other inquiries concerning the examination or status of the application is accessible in the PAIR system at http://www.uspto.gov/ebc/index.html.

This application will be forwarded to Technology Center Art Unit 3739 for action on the merits commensurate with this decision once this application's formality reviews have been completed.

David Bucci
Petitions Examiner
Office of Petitions

UNITED STATES PATENT AND TRADEMARK OFFICE

Commissioner for Patents
United States Patent and Trademark Office
P.O. Box 1450
Alexandria, VA 22313-1450
www.uspto.gov

In re Application of
Stanley J. Checketts

Application No. 13165164

Filed:

Attorney Docket No. 11-CHE/109

:DECISION ON PETITION TO MAKE SPECIAL
:UNDER 37 CFR 1.102(c)(1)

This is a decision on the electronic petition under 37 CFR 1.102 (c)(1), filed 22-JUN-2011 to make the above-identified application special based on applicant's age as set forth in MPEP § 708.02, Section IV.

The petition is **GRANTED**.

A grantable petition to make an application special under 37 CFR 1.102(c)(1), MPEP § 708.02, Section IV: Applicant's Age must include a statement by applicant or a registered practitioner having evidence that applicant is at least 65 years of age. No fee is required.

Accordingly, the above-identified application has been accorded "special" status and will be taken up for action by the examiner upon the completion of all pre-examination processing.

Telephone inquiries concerning this electronic decision should be directed to the Electronic Business Center at 866-217-9197.

All other inquiries concerning either the examination or status of the application should be directed to the Technology Center.

UNITED STATES PATENT AND TRADEMARK OFFICE

Commissioner for Patents
United States Patent and Trademark Office
P.O. Box 1450
Alexandria, VA 22313-1450
www.uspto.gov

WENDEROTH, LIND & PONACK, LLP
1030 15TH STREET, NW
SUITE 400 EAST
WASHINGTON, DC 20005-1503

MAILED
OCT 25 2011
OFFICE OF PETITIONS

In re Application of

Gholman A. Peyman, et al.
Application No. 13/165,231
Filed: June 21, 2011
Attorney Docket No. 2011_0911

DECISION ON PETITION
TO MAKE SPECIAL UNDER
37 CFR 1.102(c)(1)

This is a decision on the petition under 37 CFR 1.102(c)(1), filed October 11, 2011, to make the above-identified application special based on applicant's age as set forth in M.P.E.P. § 708.02, Section IV.

The petition is **GRANTED**.

A grantable petition to make an application special under 37 CFR 1.102(c)(1) and MPEP § 708.02, Section IV: Applicant's Age must be accompanied by evidence showing that at least one of the applicants is 65 years of age, or more, such as a birth certificate or a statement by applicant. No fee is required

The instant petition includes a declaration statement signed by applicant Gholman Peyman. Accordingly, the above-identified application has been accorded "special" status.

Telephone inquiries concerning this decision should be directed to undersigned at 571-272-1642.

All other inquiries concerning either the examination or status of the application should be directed to the Technology Center.

The application is being referred back to the Office of Patent Application Processing for pre-examination processing of the reply to the Notice to File Missing Parts mailed July 11, 2011, received October 11, 2011. This application will be accorded "special" status once pre-examination processing is complete.

/AMW/
April M. Wise
Petitions Examiner
Office of Petitions

UNITED STATES PATENT AND TRADEMARK OFFICE

UNITED STATES DEPARTMENT OF COMMERCE
United States Patent and Trademark Office
Address: COMMISSIONER FOR PATENTS
P.O. Box 1450
Alexandria, Virginia 22313-1450
www.uspto.gov

APPLICATION NO.	FILING DATE	FIRST NAMED INVENTOR	ATTORNEY DOCKET NO.	CONFIRMATION NO.
13/165,429	06/21/2011	InSeon YOO	Q124962	3844

23373 7590 09/28/2011
SUGHRUE MION, PLLC
2100 PENNSYLVANIA AVENUE, N.W.
SUITE 800
WASHINGTON, DC 20037

EXAMINER
CERVETTI, DAVID GARCIA

ART UNIT	PAPER NUMBER
2436	

NOTIFICATION DATE	DELIVERY MODE
09/28/2011	ELECTRONIC

Please find below and/or attached an Office communication concerning this application or proceeding.

The time period for reply, if any, is set in the attached communication.

Notice of the Office communication was sent electronically on above-indicated "Notification Date" to the following e-mail address(es):

sughrue@sughrue.com
PPROCESSING@SUGHRUE.COM
USPTO@SUGHRUE.COM

UNITED STATES PATENT AND TRADEMARK OFFICE

COMMISSIONER FOR PATENTS
UNITED STATES PATENT AND TRADEMARK OFFICE
WASHINGTON, DC 20231
www.uspto.gov

Christopher Bezak
Sughrue Mion, PLLC
2100 Pennsylvania Avenue, N.W.
Suite 800
Washington DC 20037

In re Application of:
Yoo
Serial No.: 13/165429
Filed: June 21, 2011
Docket: Q124962
For: **Anti-Malware Device, Server, and Method of Matching Malware Patterns**

DECISION ON PETITION TO MAKE SPECIAL FOR NEW APPLICATION UNDER 37 C.F.R. § 1.102 & M.P.E.P. § 708.02

This is a decision on the petition filed on June 21, 2011 to make the above-identified application special for accelerated examination procedure under 37 C.F.R. § 1.102(d).

The petition to make the application special is **DISMISSED**.

REGULATION AND PRACTICE

A grantable petition to make special under 37 C.F.R. § 1.102(d) and pursuant to the "Change to Practice for Petitions in Patent Applications to Make Special and for Accelerated Examination" published in the Federal Register on June 26, 2006 (71 Fed. Reg. 36323), must satisfy the following conditions:

I. Conditions Regarding the Application:

1. the application must be a non-reissue utility or design application filed under 37 CFR 1.111(a);

2. the application, the petition and the required fees must be filed electronically using the USPTO's electronic filing system (EFS), or EFS-web; if not filed electronically, a statement asserting that EFS and EFS-web were not available during the normal business hours.

3. at the time of filing, the application must be complete under 37 CFR 1.51 and in condition for examination;

4. the application must contain three or fewer independent claims and twenty or fewer total claims and the claims must be directed to a single invention.

II. Conditions Regarding the Petition:

The petition must:

1. be filed with the application;

2. include a statement that applicant agrees not to separately argue the patentability of any independent claim during any appeal in the application;

3. include a statement that applicant agrees to make an election without traverse in a telephone interview.

4. include a statement that applicant agrees to conduct such an interview when requested by the examiner.

5. include a statement, made based on a good faith belief, that a preexamination search in compliance with the following requirements, was conducted, including an identification of the filed of search by United States class and subclass, where applicable, and for database searches, the search logic or chemical structure or sequence used as a query, the name of the file(s) searched and the database service, and the date of the search.

The preexamination search must:

5.1 involve U.S. patents and patent application publications, foreign patent documents, and non-patent literature, unless the applicant can justify with reasonable certainty that no references more pertinent than those already identified are likely to be found in the eliminated sources and includes such a justification with this statement;

5.2. be directed to the claimed invention and encompass all of the features of the claims, giving the claims the broadest reasonable interpretation;

5.3. encompass the disclosed features that may be claimed.

6. must provide in support of the petition an accelerated examination support document.

An accelerated examination support document must include:

6.1. an information disclosure statement (IDS) in compliance with 37 CFR 1.98 citing each reference deemed most closely related to the subject matter of each of the claims;

6.2. an identification of all the limitations in the claims that are disclosed by the reference specifying where the limitation is disclosed in the cited reference;

6.3. a detailed explanation of how each of the claims are patentable over the references cited with particularity required by 37 CFR 1.111(b) and (c);

6.4. a concise statement of the utility of the invention as defined in each of the independent claims (unless the application is a design application);

6.5. a showing of where each limitation of the claims finds support under 35 USC 112, first paragraph, in the written description of the specification. If applicable, the showing must also identify: (1) each means- (or step) plus-function claim element that invokes consideration under 35 UDC 112, sixth paragraph; and (2) the structure, material, or acts in the specification that corresponds to each means- (or step) plus-function claim element that invokes consideration under 35 UDC 112, sixth paragraph; if the application claims the benefit of one or more applications under title 35, United States Code, the showing must also include where each limitation of the claims finds support under 35 USC 112, first paragraph, in each such application in which such supports exists;

6.6. an identification of any cited references that may be disqualified under 35 USC 103(c).

REVIEW OF FACTS

The conditions I 1-4, II 1-4 and II 5.1- 5.3, II 6.1-6.4 above are considered to have been met. However, the petition fails to comply with conditions II 6.5 and 6.6 above. Therefore, the petition fails to meet the required conditions to be accorded special status under the accelerated examination procedure.

Regarding the requirement of MPEP § 708.02(a)(I.)(5) and item II. 6.5 above, the preexamination support document fails to provide a showing of the 112 1st support for each and every claim feature in the written description of this application. See claims 9-10 for example in this application and Korean applications 10-2010-0058504 and 10-2011-0059075 that this application claims benefit of. See claims 11 and 14 for example for the Korean applications.

Regarding the requirement of MPEP § 708.02(a)(I.)(6) and item II. 6.6. above, the preexamination support document fails to discuss if any cited references may or may not be disqualified under 35 USC 103(c).

DECISION

For the above-stated reasons, the petition is **dismissed**. The application will therefore be taken up by the examiner for action in its regular turn.

Petitioner is given a single opportunity to perfect the petition. Any request for reconsideration of this decision must be submitted within 1 (one) month or 30 (thirty) days, whichever is longer, (no extension of time under 37 CFR 1.136(a)) from the date of this decision in order to be considered timely. Any request for reconsideration must address the deficiencies indicated above.

Petitioner is reminded that, upon granting of the special status of the application on request for reconsideration, the application will be processed expeditiously. However, due to the dismissal of the instant petition, examination may not be completed within twelve months of the filing date of the application.

A courtesy phone call or email (tod.swann@uspto.gov) stating that a renewed petition has been filed is requested upon refiling of the petition. This will speed up the deciding of the second petition.

Any inquiry regarding this decision should be directed to Tod Swann, Quality Assurance Specialist, at (571) 272-3612. A second point of Contact is Chris Grant at (571)-272-7294.

/Tod Swann/

Tod R Swann, WQAS 2430
Technology Center 2400
Networking, Multiplex, Cable and Information Security

UNITED STATES PATENT AND TRADEMARK OFFICE

UNITED STATES DEPARTMENT OF COMMERCE
United States Patent and Trademark Office
Address: COMMISSIONER FOR PATENTS
P.O. Box 1450
Alexandria, Virginia 22313-1450
www.uspto.gov

APPLICATION NO.	FILING DATE	FIRST NAMED INVENTOR	ATTORNEY DOCKET NO.	CONFIRMATION NO.
13/165,429	06/21/2011	InScon YOO	Q124962	3844

23373 7590 11/09/2011
SUGHRUE MION, PLLC
2100 PENNSYLVANIA AVENUE, N.W.
SUITE 800
WASHINGTON, DC 20037

EXAMINER
MOAZZAMI, NASSER G

ART UNIT	PAPER NUMBER
2436	

NOTIFICATION DATE	DELIVERY MODE
11/09/2011	ELECTRONIC

Please find below and/or attached an Office communication concerning this application or proceeding.

The time period for reply, if any, is set in the attached communication.

Notice of the Office communication was sent electronically on above-indicated "Notification Date" to the following e-mail address(es):

USPTO@sughrue.com
sughrue@sughrue.com
PPROCESSING@SUGHRUE.COM

UNITED STATES PATENT AND TRADEMARK OFFICE

COMMISSIONER FOR PATENTS
UNITED STATES PATENT AND TRADEMARK OFFICE
WASHINGTON, DC 20231
www.uspto.gov

Christopher Bezak
Sughrue Mion, PLLC
2100 Pennsylvania Avenue, N.W.
Suite 800
Washington DC 20037

In re Application of:
Yoo
Serial No.: 13/165429
Filed: June 21, 2011
Docket: Q124962
For: **Anti-Malware Device, Server, and Method of Matching Malware Patterns**

DECISION ON PETITION TO MAKE SPECIAL FOR NEW APPLICATION UNDER 37 C.F.R. § 1.102 & M.P.E.P. § 708.02

This is a decision on the petition re-filed on October 28, 2011 to make the above-identified application special for accelerated examination procedure under 37 C.F.R. § 1.102(d). The original petition was filed on June 21, 2011 and dismissed on September 27 2011.

The petition to make the application special is **GRANTED** as papers filed on October 28, 2011 and filed originally meet the requirements of 37 C.F.R. § 1.102(d) and MPEP 708.02(a) as the 35 USC 112 1st support and the 35 USC 103(c) statements are now proper.

The prosecution of the instant application will be conducted expeditiously according to the following guidelines.

The application will be docketed to an examiner and taken up for action within two weeks of the date of this decision.

1. Restriction Practice:
If the examiner determines that the claims are not directed to a single invention, a telephone request to elect one single invention will be made pursuant to MPEP 812.01. As a prerequisite to the grant of this petition, the applicant has agreed to make an oral election, by telephone, without traverse. If the applicant refuses to make an election without traverse, or the examiner cannot reach the applicant after a reasonable effort, the examiner will treat the first claimed invention (invention defined by claim 1) as having being constructively elected without traverse for examination.

2. Office action:

If it is determined that, after appropriate consultation, there is a potential rejection or any other issue to be addressed, the examiner will telephone the applicant and arrange an interview to discuss and resolve the issue. An Office action, other than a Notice of Allowance and Fee(s) Due (Notice of Allowance), will not be issued unless either: 1) an interview was conducted but did not result in agreed to action that places the application in condition for allowance, or, 2) a determination is made that an interview would be unlikely to result in the application being placed in condition for allowance, and 3) an internal conference has been held to review any rejection of any claim.

3. Time for Reply:
An Office action other than a Notice of Allowance or a final Office action will set a shortened statutory period of one month or thirty days, whichever is longer, for reply with no extension of time available under 37 CFR 1.136(a). Failure to timely file a reply within this non-extendible period for reply will result in the abandonment of the application.

4. Reply by Applicant:
A timely reply to an Office action other than the Notice of Allowance must be submitted electronically via EFS or EFS-web and limited to addressing the rejections, objections and requirement made. Any amendment that attempts to: 1) add claims which would result in more than three pending independent claims or more than twenty pending total claims; 2) present claims not encompassed by the pre-examination search or an updated accelerated examination support document; or 3) present claims that are directed a non-elected invention or an invention other than that previously claimed and examined in the application, will be treated as not fully responsive and will not be entered.

For any amendment to the claims (including any new claim) that is not encompassed by the accelerated examination support document, applicant must provide an updated accelerated examination support document that encompasses the amended or new claims at the time of filing of the amendment.

To proceed expeditiously with the examination, it is recommended that a reply with amendments made to any claim or with any new claim being added be accompanied by an updated accelerated examination support document or a statement explaining how the amended or new claim is supported by the original accelerated examination support document.

5. Information Disclosure Statement (IDS):
Any IDS filed during prosecution must be submitted electronically via EFS or EFS-web, accompanied by an updated accelerated examination support document, and be in compliance with 37 CFR 1.97 and 1.98.

6. Post-Allowance Processing:
To expedite processing of the allowed application into a patent, the applicant must: 1) pay the required fees within one month of the date of the Notice of Allowance, and 2) not file any post allowance papers not required by the Office. In no event may the issue fee be paid and accepted later than three months from the date of the Notice of Allowance.

7. After-Final and Appeal Procedures:
To expedite prosecution, after receiving the final Office action, applicant must: 1) promptly file a notice of appeal, an appeal brief and appeal fees; and 2) not request a pre-appeal brief conference.

Any amendment, affidavit or other evidence filed after final Office action must comply with applicable rules and the requirements outlined in numbered paragraphs 5 and 6 above.

On appeal, the application will proceed according to normal appeal procedures. After appeal, the application will again be treated special.

8. Proceedings Outside the Normal Examination Process:
If the application becomes involved in a proceeding that is outside the normal examination process (e.g., a secrecy order, national security review, interference proceeding, petitions under 37 CFR 1.181, 182 or 183), the application will be treated special before and after such proceeding.

9. Final Disposition:
The twelve month goal of this accelerated examination procedure ends with a final disposition. The mailing of a final Office action, a Notice of Allowance, the filing of a Notice of Appeal, or the filing of a Request for Continued Examination (RCE) is the final disposition.

If, during prosecution, a paper is not filed electronically using EFS-web, a reply is filed but is not fully responsive, the application is involved in an appeal, or a proceeding outside normal examination process, the application will still be examined expeditiously, however, the final disposition may occur more than twelve months from the filing of the application.

Any inquiry regarding this decision should be directed to Tod Swann, Quality Assurance Specialist, at (571) 272-3612. A second point of Contact is Chris Grant at (571)-272-7294.

/Tod Swann/

Tod R Swann, WQAS 2430
Technology Center 2400
Networking, Multiplex, Cable and Information Security

Doc Code: PET.GREEN
Document Description: Petition for Green Tech Pilot

PTO/SB/420 (11-10)
Approved for use through 01/31/2011. OMB 0651-0062
U.S. Patent and Trademark Office; U. S. DEPARTMENT OF COMMERCE
Under the Paperwork Reduction Act of 1995, no persons are required to respond to a collection of information unless it displays a valid OMB control number.

PETITION TO MAKE SPECIAL UNDER THE GREEN TECHNOLOGY PILOT PROGRAM

Attorney Docket Number: 83192323	Application Number (if known): 13/165,487	Filing date: June 21, 2011
First Named Inventor: Eric Kurtz		
Title: METHOD ENGINE STARTING		

APPLICANT HEREBY REQUESTS TO PARTICIPATE IN THE GREEN TECHNOLOGY PILOT PROGRAM FOR THE ABOVE-IDENTIFIED APPLICATION. See Instruction Sheet on page 2.

This petition must be timely filed electronically using the USPTO electronic filing system, EFS-Web.

1. By filing this petition:

   Applicant is requesting early publication: Applicant hereby requests early publication under 37 CFR 1.219 and the publication fee set forth in 37 CFR 1.18(d) accompanies this request.

2. By filing this petition: applicant is agreeing to make an election without traverse in a telephonic interview and elect an invention that meets the eligibility requirements for the Green Technology Pilot Program, if the Office determines that the claims are not obviously directed to a single invention. See Instruction Sheet.

3. This request is accompanied by statements of special status for the eligibility requirement.

4. The application contains no more than three (3) independent claims and twenty (20) total claims.

5. The application does not contain any multiple dependent claims.

6. Other attachments: _____

Signature /John D. Russell/	Date July 15, 2011
Name (Print/Typed) John D. Russell	Registration Number 47,048

Note: *Signatures of all the inventors or assignees of record of the entire interest or their representative(s) are required in accordance with 37 CFR 1.33 and 11.18. Please see 37 CFR 1.4(d) for the form of the signature. If necessary, submit multiple forms for more than one signature see below*.*

[X] *Total of 1 forms are submitted.

The information is required to obtain or retain a benefit by the public which is to file (and by the USPTO to process) an application. Confidentiality is governed by 35 U.S.C. 122 and 37 CFR 1.11 and 1.14. This collection is estimated to take 12 hours to complete, including gathering, preparing, and submitting the completed application form to the USPTO. Time will vary depending upon the individual case. Any comments on the amount of time you require to complete this form and/or suggestions for reducing this burden, should be sent to the Chief Information Officer, U.S. Patent and Trademark Office, U.S. Department of Commerce, P.O. Box 1450, Alexandria, VA 22313-1450. DO NOT SEND FEES OR COMPLETED FORMS TO THIS ADDRESS. **SEND TO: Commissioner for Patents, P.O. Box 1450, Alexandria, VA 22313-1450.**

If you need assistance in completing the form, call 1-800-PTO-9199 and select option 2.

IN THE UNITED STATES PATENT AND TRADEMARK OFFICE

Applicants	:	Eric Kurtz
Application No.	:	13/165,487
Filed	:	June 21, 2011
Title	:	METHOD ENGINE STARTING
Group Art Unit	:	Not yet assigned
Confirmation No.	:	3953
Docket No.	:	83192323

Commissioner for Patents
P.O. Box 1450
Alexandria, VA 22313-1450

CERTIFICATE OF TRANSMISSION

I hereby certify that this correspondence is being transmitted via the U.S. Patent and Trademark Office electronic filing system (EFS-Web) to the USPTO on:

July 15, 2011	/Angie C. Farr/
Date	Angie C. Farr

STATEMENTS OF SPECIAL STATUS

Applicants respectfully request consideration of the following statement concerning the basis for the special status as well as the following statement pertaining to the materiality standard.

I. Statement concerning the basis for special status.

Applicants submit that special status is sought on the following basis: the claimed invention materially enhances the quality of the environment.

II. Statement pertaining to the materiality standard.

As a preliminary matter, Applicants note that the following statement refers explicitly to the elements of independent claim 1, which is the broadest claim in many respects.

Applicants submit that the claimed invention materially enhances the quality of the environment by reducing engine emissions. Specifically, the claimed invention increases cold-start exhaust temperatures to reduce catalyst light-off time. As explained in the Background and Summary of the subject application, diesel engines can provide high torque and improved fuel economy as compared to gasoline engines. However, the

temperature of diesel exhaust gases is lower than that of many gasoline engines. Therefore, it may take longer for catalysts in an exhaust system of the diesel engine to reach a temperature where a threshold catalyst efficiency temperature is reached (e.g., a catalyst light off temperature). Further, many diesel engine are turbocharged to improve engine output, and exhaust gas heat is extracted by the turbocharger. Consequently, even less exhaust gas heat may be available to light off the catalyst. In view of exhaust gas heating challenges associated with diesel engines, it may be desirable to provide for a way to improve diesel engine starting. The claimed invention addresses this issue by providing a method for improved exhaust heating in cold-start conditions. For example, claim 1 recites:

> A method, comprising:
>
> operating an engine at idle conditions with a first EGR percent concentration of cylinder charge when engine temperature is less than a first engine temperature; and
>
> operating the engine at idle conditions with a second EGR percent concentration of cylinder charge when engine temperature is greater than the first engine temperature, the second EGR percent concentration less than the first EGR percent concentration.

By operating an engine after a cold engine start with a higher level of exhaust gas recirculation (EGR) than is delivered during similar warm engine operating conditions, it may be possible to increase engine exhaust gas temperatures to reduce catalyst light off time. Further, increasing EGR and retarding combustion phasing (e.g., location of peak cylinder pressure) can increase engine temperature in a reduced amount of time. Consequently, engine emissions may be reduced. In one example, engine speed and load may be increased via a hybrid powertrain to allow higher levels of EGR at engine idle conditions. The higher levels of EGR at idle can retard combustion timing so as to direct more combustion heat to the engine and engine exhaust system. This approach may reduce catalyst light off time, thereby reducing engine emissions. Further, the approach may reduce engine warm up time so as to reduce engine feed gas emissions, and thus enhance the quality of the environment.

Please charge any cost incurred in this filing, along with any other costs, to Deposit Account No. 06-1510.

Respectfully submitted,

ALLEMAN HALL MCCOY RUSSELL & TUTTLE LLP

/John D. Russell/
John D. Russell
Registration No. 47,048
Customer No. 36865
Attorney/Agent for Applicants/Assignee
806 S.W. Broadway, Suite 600
Portland, Oregon 97205
Telephone: (503) 459-4141
Facsimile: (503) 459-4142

UNITED STATES PATENT AND TRADEMARK OFFICE

UNITED STATES DEPARTMENT OF COMMERCE
United States Patent and Trademark Office
Address: COMMISSIONER FOR PATENTS
P.O. Box 1450
Alexandria, Virginia 22313-1450
www.uspto.gov

APPLICATION NO.	FILING DATE	FIRST NAMED INVENTOR	ATTORNEY DOCKET NO.	CONFIRMATION NO.
13/165,487	06/21/2011	Eric Kurtz	83192323	3953

36865 7590 07/25/2011
ALLEMAN HALL MCCOY RUSSELL & TUTTLE, LLP
806 S.W. BROADWAY, SUITE 600
PORTLAND, OR 97205

EXAMINER

ART UNIT	PAPER NUMBER
3747	

MAIL DATE	DELIVERY MODE
07/25/2011	PAPER

Please find below and/or attached an Office communication concerning this application or proceeding.

The time period for reply, if any, is set in the attached communication.

UNITED STATES PATENT AND TRADEMARK OFFICE

Commissioner for Patents
United States Patent and Trademark Office
P.O. Box 1450
Alexandria, VA 22313-1450
www.uspto.gov

ALLEMAN HALL MCCOY RUSSELL & TUTTLE, LLP
806 S.W. BROADWAY
SUITE 600
PORTLAND OR 97205

In re Application of	:	
KURTZ, ERIC	:	DECISION ON PETITION
Application No. 13/165,487	:	TO MAKE SPECIAL UNDER
Filed: June 21, 2011	:	THE GREEN TECHNOLOGY
Attorney Docket No. 83192323	:	PILOT PROGRAM

This is a decision on the petition under 37 CFR 1.102, filed July 15, 2011, to make the above-identified application special under the pilot program for applications pertaining to Green Technologies as set forth in 74 Federal Register Notice 64666 (December 8, 2009) and amended by 75 Federal Register Notice 28554 (May 21, 2010) and 75 Federal Register Notice 69049 (November 10, 2010).

The petition is **granted**.

If reconsideration of this decision is desired, a petition for reconsideration must be filed within ONE (1) MONTH OR THIRTY (30) DAYS from the mail date of this decision, whichever is longer. No extension of this time limit can be granted under 37 CFR 1.136(a) or (b). The petition for reconsideration should include an exhaustive attempt to provide the lacking item(s) noted below, since, after a decision on the petition for reconsideration, no further reconsideration or review of the matter will be undertaken by the Director.

A grantable petition to make an application special under 37 CFR 1.102 and the pilot program as set forth in 74 FR 64666 must be directed to a nonprovisional application filed under 35 USC 111(a) or be a national stage entry under 35 USC 371, exclusive of any reissue applications and be filed prior to the date of the notice, December 8, 2009.

In order to qualify for special status, the following requirements must be met. 1) The application must have no more than 3 independent claims and no more than 20 total claims. 2) The application must not contain any multiple dependent claims. 3) The petition must state the basis for seeking special status, i.e., the claimed invention either: A) materially enhances the quality of the environment or B) materially contributes to: i) the discovery or development of renewable energy resources, ii) the more efficient utilization and conservation of energy resources, or iii) greenhouse gas emission reduction. 4) If the disclosure is not clear on its face that the claimed invention materially contributes under category (A) or (B), the petition must be accompanied by a statement by the applicant, assignee, or an attorney/agent registered to practice before the Office explaining how the materiality standard is met. 5) A statement that applicant will agree to make an election without traverse in a telephonic interview if a restriction requirement is made

by the examiner. 6) The petition to make special must be filed electronically. 7) The petition must be filed at least one day prior to the date that a first Office Action appears in the Patent Application Information Retrieval (PAIR) system. 8) The petition must be accompanied by a request for early publication in compliance with 37 CFR 1.219 and include the publication fee as set forth in 37 CFR 1.18(d).

The requirement for a fee for consideration of the petition to make special for applications pertaining to Green Technologies has been waived.

The instant petition complies with items 1 – 8 above. Accordingly, the above-identified application has been accorded "special" status.

Telephone inquiries concerning this decision should be directed to Henry Yuen at 571-272-4856.

The application is being forwarded to the Technology Center Art Unit 3747 for action.

/Henry C. Yuen/

Henry C. Yuen
Quality Assurance Specialist
Technology Center 3700

UNITED STATES PATENT AND TRADEMARK OFFICE

Commissioner for Patents
United States Patent and Trademark Office
P.O. Box 1450
Alexandria, VA 22313-1450
www.uspto.gov

SEP 2 0 2011

BAKER BOTTS L.L.P.
30 ROCKEFELLER PLAZA
44th Floor
NEW YORK NY 10112-4498

In re Application of: Blythe et al.
Application No.: 13/165514
Filed: June 21, 2011
Title: SLIDER TRACK WITH IMPROVED SEAL STRENGTH

DECISION ON PETITION TO MAKE SPECIAL FOR NEW APPLICATION UNDER 37 C.F.R. § 1.102 & M.P.E.P. § 708.02

This is a decision on the petition filed on June 21, 2011 to make the above-identified application special for accelerated examination procedure under 37 C.F.R. § 1.102(d).

The petition to make the application special is **DISMISSED**.

REGULATION AND PRACTICE

A grantable petition to make special under 37 C.F.R. § 1.102(d) and pursuant to the "Change to Practice for Petitions in Patent Applications to Make Special and for Accelerated Examination" published in the Federal Register on June 26, 2006 (71 Fed. Reg. 36323), must satisfy the following conditions:

I. Conditions Regarding the Application:

1. the application must be a non-reissue utility or design application filed under 37 CFR 1.111(a);
2. the application, the petition and the required fees must be filed electronically using the USPTO's electronic filing system (EFS), or EFS-web; if not filed electronically, a statement asserting that EFS and EFS-web were not available during the normal business hours.
3. at the time of filing, the application must be complete under 37 CFR 1.51 and in condition for examination;
4. the application must contain three or fewer independent claims and twenty or fewer total claims and the claims must be directed to a single invention.

II. Conditions Regarding the Petition:

The petition must:

1. be filed with the application;
2. include a statement that applicant agrees not to separately argue the patentability of any independent claim during any appeal in the application;

3. include a statement that applicant agrees to make an election without traverse in a telephone interview.

4. include a statement that applicant agrees to conduct such an interview when requested by the examiner.

5. include a statement, made based on a good faith belief, that a preexamination search in compliance with the following requirements, was conducted, including an identification of the field of search by United States class and subclass, where applicable, and for database searches, the search logic or chemical structure or sequence used as a query, the name of the file(s) searched and the database service, and the date of the search.

The preexamination search must:

5.1 involve U.S. patents and patent application publications, foreign patent documents, and non-patent literature, unless the applicant can justify with reasonable certainty that no references more pertinent than those already identified are likely to be found in the eliminated sources and includes such a justification with this statement;

5.2. be directed to the claimed invention and encompass all of the features of the claims, giving the claims the broadest reasonable interpretation;

5.3. encompass the disclosed features that may be claimed.

6. must provide in support of the petition an accelerated examination support document. An accelerated examination support document must include:

6.1. an information disclosure statement (IDS) in compliance with 37 CFR 1.98 citing each reference deemed most closely related to the subject matter of each of the claims;

6.2. an identification of all the limitations in the claims that are disclosed by the reference specifying where the limitation is disclosed in the cited reference;

6.3. a detailed explanation of how each of the claims are patentable over the references cited with particularity required by 37 CFR 1.111(b) and (c);

6.4. a concise statement of the utility of the invention as defined in each of the independent claims (unless the application is a design application);

6.5. a showing of where each limitation of the claims finds support under 35 U.S.C. 112, first paragraph, in the written description of the specification. If applicable, the showing must also identify: (1) each means- (or step) plus-function claim element that invokes consideration under 35 U.S.C. 112, sixth paragraph; and (2) the structure, material, or acts in the specification that corresponds to each means- (or step) plus-function claim element that invokes consideration under 35 U.S.C. 112, sixth paragraph; if the application claims the benefit of one or more applications under title 35, United States Code, the showing must also include where each limitation of the claims finds support under 35 U.S.C. 112, first paragraph, in each such application in which such supports exists;

6.6. an identification of any cited references that may be disqualified under 35 U.S.C. 103(c).

REVIEW OF FACTS

The conditions I:1-4, II: 1-5, 5.3, 6, 6.1, and 6.4 above are considered to have been met. However, the petition fails to comply with conditions II : 5.1, 5.2, 6.2, 6.3, 6.5 and 6.6 above.

Therefore, the petition fails to meet the required conditions to be accorded special status under the accelerated examination procedure.

Discussion

When referring to "the petition" hereinbelow, the received papers under consideration include the PTO/SB/28 form, the "pre-examination search document" including pages 1-7; the "accelerated examination support document" comprising pages 1-114, and an Information Disclosure Statement including form PTO/SB/08A.

Regarding the requirements of section II element 5.1 and 5.2 outlined above, it appears the search outlined in the petition omitted a critical search area by not searching in class 24 subclasses 30.5R, 585.11, and Dig. 50.

Regarding the requirements of section II element 6.2 outlined above, the petition fails to identify all of the limitations in the application claims that are disclosed in each of the reference(s) and where the limitation is disclosed in each of the cited reference. As stated in the policy published in the Federal Register on June 26, 2006 (71 Fed. Reg. 36323), for each reference cited, the examination support document must include an identification of all the limitations in the claims that are disclosed by the reference specifying where the limitation is disclosed in the cited reference. The policy statement does not caveat "the independent claims", nor does it allow for grouping and general discussions. A grantable petition must delineate every limitation of every claim and identify where the equivalent limitation is disclosed in each piece of prior art cited on the IDS. As is published on www.uspto.gov/web/patents/accelerated/ in "Guidelines for Applicants under the new accelerated examination procedures"):

> *For each reference cited, the accelerated examination support document must include an identification of all the limitations in the claims that are disclosed by the reference specifying where the limitation is disclosed in the cited reference. Applicants should specify where in each of the cited references the particular claim limitations are found. This process is intended to be analogous to the analysis an examiner uses when locating a relevant prior art reference and then determining whether the reference contains the claimed limitation. For each claimed limitation, the examiner would consider the disclosure of the reference and all reasonable portions in the reference where the limitation is shown. When preparing an Office Action, the examiner would correlate the limitation to the portion of reference which best characterizes the limitation. This part of the AESD is not intended to be an exhaustive listing of every conceivable subjective interpretation of how a claim limitation may read on the reference. Applicants should point out what are considered to be the relevant representations of the limitation in the reference. A limitation may be found in more than one portion of the reference and should be pointed out, yet the intention is not to have applicants point out every conceivable interpretation. The USPTO will adopt a rule of reason when evaluating this portion of the AESD. Unless the representation is so deficient that it would materially effect examination of the application (e.g., numerous instances where the limitations are not shown where applicant states they are), the representation will be deemed to be sufficient for this part of the AESD.*

In the instant petition, petitioner does not address each limitation and where it is (or state that it is not) found in each closest prior art. Petitioner does not indicate where each limitation is found or specifically indicate that it is not found. For example, in claim 2 petitioner refers to the limitation in claim 1 but does not address the limitation specifically found in claim 2. By not addressing all limitations, it is not clear whether a limitation was overlooked in the discussion of the reference or not found in the reference.

Additionally, every reference found in the IDS is not discussed. If applicant wishes to cite references that are not required in an AESD for the examiner to consider, applicant may submit such references in a separate IDS in compliance with 37 CFR §1.97 and §1.98. Applicant should clearly identify the IDS of the AESD that is in support of the petition to make special and, similarly, applicant should clearly identify the separate IDS that is not in support of the petition. Consistent with 37 CFR §10.18, any reference submitted in a separate IDS that is not part of an AESD will be treated as a representation by applicant to the USPTO that no reference submitted in the separate IDS is deemed closer to the subject matter of at least one claim than the references provided in the AESD.

Similarly, with respect to the requirements of section II element 6.3 outlined above, the petition fails to provide a detailed explanation of how each of the claims are patentable over (each of) the reference(s) with particularity required by 37 CFR 1.111(b) and (c). Petitioners should be specific in their explanation and include the identification of specific claim limitations that support their position, where appropriate. Petitioners must distinguish each claim from each piece of prior art cited. General statements that the claims are neither anticipated nor rendered obvious by the cited references or that the references are not properly combinable will not be acceptable. The Office cannot infer or guess what petitioner believes the differences between the claims and the teachings of the prior art to be. Petitioner's statements must also be consistent and must be related to the claim language. In the instant petition, the dependent claims are not discussed relative to obviousness. Additionally, not all references from the IDS are discussed. A statement that the dependent claims are allowable because the independent claims are patentable is not sufficient. This does not provide guidance to the examiner as to whether the limitations could provide patentability should the examiner find the independent claims unpatentable.

Regarding the requirements of section II element 6.5 outlined above, the requirements of this section are not met. A grantable petition requires petitioner to provide a showing of where <u>each limitation</u> of the claims finds support under 35 U.S.C. 112, first paragraph, in the written description of the specification. If applicable, the showing must also identify: (1) each means- (or step) plus-function claim element that invokes consideration under 35 U.S.C. 112, sixth paragraph; and (2) the structure, material, or acts in the specification that corresponds to each means- (or step) plus-function claim element that invokes consideration under 35 U.S.C. 112, sixth paragraph; if the application claims the benefit of one or more applications under title 35, United States Code, the showing must also include where each limitation of the claims finds support under 35 U.S.C. 112, first paragraph, in each such application in which such supports exists. In the instant petition, each means plus function claim element is not identified. If there are none a statement to such must be made. Additionally, 35 U.S.C. 112 first paragraph support has not been made to priority documents 13/102637 and 61/358770.

Finally, regarding the requirements of section II element 6.6, the petition does not provide an identification of any cited references that may be disqualified under 35 U.S.C. 103(c). If there are no such references, a statement to such must be made.

DECISION

For the above-stated reasons, the petition is **dismissed**. The application will therefore be taken up by the examiner for action in its regular turn.

Petitioner is given a single opportunity to perfect the petition. Any request for reconsideration of this decision must be submitted within 1 (one) month or 30 (thirty) days, whichever is longer, (no extension of time under 37 CFR 1.136(a)) from the date of this decision in order to be considered timely. Any request for reconsideration must address all of the deficiencies indicated above.

Petitioner is reminded that, upon granting of the special status of the application on request for reconsideration, the application will be processed expeditiously. However, due to the dismissal of the instant petition, examination may not be completed within twelve months of the filing date of the application.

Any inquiry regarding this decision should be directed to Linda J. Sholl, TC 3700 Special Programs Examiner, at (571) 272-4391.

/Linda J. Sholl/
Linda J. Sholl
Special Programs Examiner
Technology Center 3700

UNITED STATES PATENT AND TRADEMARK OFFICE

Commissioner for Patents
United States Patent and Trademark Office
P.O. Box 1450
Alexandria, VA 22313-1450
www.uspto.gov

NOV 01 2011

BAKER BOTTS L.L.P.
30 ROCKEFELLER PLAZA
44th Floor
NEW YORK NY 10112-4498

In re Application of: Blythe et al. Application No.: 13/165514 Filed: June 21, 2011 Title: SLIDER TRACK WITH IMPROVED SEAL STRENGTH	DECISION ON PETITION TO MAKE SPECIAL FOR NEW APPLICATION UNDER 37 C.F.R. § 1.102 & M.P.E.P. § 708.02

This is a decision on the renewed petition filed on October 20, 2011 to make the above-identified application special for accelerated examination procedure under 37 C.F.R. § 1.102(d).

The petition to make the application special is GRANTED.

The application is eligible for accelerated examination and the petition complies with the conditions for granting the application special status pursuant to the "Change to Practice for Petitions in Patent Applications to Make Special and for Accelerated Examination" published June 26, 2006, in the Federal Register. (71 Fed. Reg. 36323).

The prosecution of the instant application will be conducted expeditiously according to the following guidelines.

1. The application will be docketed to an examiner and taken up for action within two weeks of the date of this decision.

2. Restriction Practice:
   If the examiner determines that the claims are not directed to a single invention, a telephone request to elect one single invention will be made pursuant to MPEP 812.01. As a prerequisite to the grant of this petition, the applicant has agreed to make an oral election, by telephone, without traverse. If the applicant refuses to make an election without traverse, or the examiner cannot reach the applicant after a reasonable effort, the examiner will treat the first claimed invention (invention defined by claim 1) as having being constructively elected without traverse for examination.

3. Office action:
   If it is determined that, after appropriate consultation, there is a potential rejection or any other issue to be addressed, the examiner will telephone the applicant and arrange an interview to discuss and resolve the issue. An Office action, other than a Notice of Allowance and Fee(s) Due (Notice of Allowance), will not be issued unless either: 1) an interview was conducted but did not result in agreed to action that places the application in condition for allowance, or, 2) a determination is made that an interview would be unlikely to result in the application being placed in condition for allowance, and 3) an internal conference has been held to review any rejection of any claim.

4. Time for Reply:
   An Office action other than a Notice of Allowance or a final Office action will set a shortened statutory period of one month or thirty days, whichever is longer, for reply with no extension of time available under 37 CFR 1.136(a). Failure to timely file a reply within this non-extendible period for reply will result in the abandonment of the application.

5. Reply by Applicant:
   A timely reply to an Office action other than the Notice of Allowance must be submitted electronically via EFS or EFS-web and limited to addressing the rejections, objections and requirement made. Any amendment that attempts to: 1) add claims which would result in more than three pending independent claims or more than twenty pending total claims; 2) present claims not encompassed by the pre-examination search or an updated accelerated examination support document; or 3) present claims that are directed a non-elected invention or an invention other than that previously claimed and examined in the application, will be treated as not fully responsive and will not be entered.

   For any amendment to the claims (including any new claim) that is not encompassed by the accelerated examination support document, applicant must provide an updated accelerated examination support document that encompasses the amended or new claims at the time of filing of the amendment.

   To proceed expeditiously with the examination, it is recommended that a reply with amendments made to any claim or with any new claim being added be accompanied by an updated accelerated examination support document or a statement explaining how the amended or new claim is supported by the original accelerated examination support document.

6. Information Disclosure Statement (IDS):
   Any IDS filed during prosecution must be submitted electronically via EFS or EFS-web, accompanied by an updated accelerated examination support document, and be in compliance with 37 CFR 1.97 and 1.98.

7. Post-Allowance Processing:
   To expedite processing of the allowed application into a patent, the applicant must: 1) pay the required fees within one month of the date of the Notice of Allowance, and 2) not file any post allowance papers not required by the Office. In no event may the issue fee be paid and accepted later than three months from the date of the Notice of Allowance.

8. After-Final and Appeal Procedures:
   To expedite prosecution, after receiving the final Office action, applicant must: 1) promptly file a notice of appeal, an appeal brief and appeal fees; and 2) not request a pre-appeal brief conference.

   Any amendment, affidavit or other evidence filed after final Office action must comply with applicable rules and the requirements outlined in numbered paragraphs 5 and 6 above.

   On appeal, the application will proceed according to normal appeal procedures. After appeal, the application will again be treated special.

9. Proceedings Outside the Normal Examination Process:
   If the application becomes involved in a proceeding that is outside the normal examination process (e.g., a secrecy order, national security review, interference proceeding, petitions under 37 CFR 1.181, 182 or 183), the application will be treated special before and after such proceeding.

10. Final Disposition:
    The twelve month goal of this accelerated examination procedure ends with a final disposition. The mailing of a final Office action, a Notice of Allowance, the filing of a Notice of Appeal, or the filing of a Request for Continued Examination (RCE) is the final disposition.

If, during prosecution, a paper is not filed electronically using EFS-web, a reply is filed but is not fully responsive, the application is involved in an appeal, or a proceeding outside normal examination process, the application will still be examined expeditiously, however, the final disposition may occur more than twelve months from the filing of the application.

Any inquiry regarding this decision should be directed to Linda Sholl at (571) 272-4391

/Linda Sholl/
Linda Sholl
Special Programs Examiner
Technology Center 3700

UNITED STATES PATENT AND TRADEMARK OFFICE

Commissioner for Patents
United States Patent and Trademark Office
P.O. Box 1450
Alexandria, VA 22313-1450
www.uspto.gov

SEP 2 0 2011

Faegre & Benson LLP
90 South Seventh Street
2200 Wells Fargo Center
Minneapolis MN 55402-3901

In re Application of: James Browning
Application No.: 13/165525
Filed: June 21, 2011
Title: ADJUSTABLE SURGICAL IMPLANT FOR TREATING URINARY INCONTINENCE

DECISION ON PETITION TO MAKE SPECIAL FOR NEW APPLICATION UNDER 37 C.F.R. § 1.102 & M.P.E.P. § 708.02

This is a decision on the petition filed on June 21, 2011 to make the above-identified application special for accelerated examination procedure under 37 C.F.R. § 1.102(d).

The petition to make the application special is **DISMISSED**.

REGULATION AND PRACTICE

A grantable petition to make special under 37 C.F.R. § 1.102(d) and pursuant to the "Change to Practice for Petitions in Patent Applications to Make Special and for Accelerated Examination" published in the Federal Register on June 26, 2006 (71 Fed. Reg. 36323), must satisfy the following conditions:

I. Conditions Regarding the Application:

1. the application must be a non-reissue utility or design application filed under 37 CFR 1.111(a);

2. the application, the petition and the required fees must be filed electronically using the USPTO's electronic filing system (EFS), or EFS-web; if not filed electronically, a statement asserting that EFS and EFS-web were not available during the normal business hours.

3. at the time of filing, the application must be complete under 37 CFR 1.51 and in condition for examination;

4. the application must contain three or fewer independent claims and twenty or fewer total claims and the claims must be directed to a single invention.

II. Conditions Regarding the Petition:

The petition must:

1. be filed with the application;

2. include a statement that applicant agrees not to separately argue the patentability of any independent claim during any appeal in the application;

3. include a statement that applicant agrees to make an election without traverse in a telephone interview.

4. include a statement that applicant agrees to conduct such an interview when requested by the examiner.

5. include a statement, made based on a good faith belief, that a preexamination search in compliance with the following requirements, was conducted, including an identification of the field of search by United States class and subclass, where applicable, and for database searches, the search logic or chemical structure or sequence used as a query, the name of the file(s) searched and the database service, and the date of the search.

The preexamination search must:

5.1 involve U.S. patents and patent application publications, foreign patent documents, and non-patent literature, unless the applicant can justify with reasonable certainty that no references more pertinent than those already identified are likely to be found in the eliminated sources and includes such a justification with this statement;

5.2. be directed to the claimed invention and encompass all of the features of the claims, giving the claims the broadest reasonable interpretation;

5.3. encompass the disclosed features that may be claimed.

6. must provide in support of the petition an accelerated examination support document. An accelerated examination support document must include:

6.1. an information disclosure statement (IDS) in compliance with 37 CFR 1.98 citing each reference deemed most closely related to the subject matter of each of the claims;

6.2. an identification of all the limitations in the claims that are disclosed by the reference specifying where the limitation is disclosed in the cited reference;

6.3. a detailed explanation of how each of the claims are patentable over the references cited with particularity required by 37 CFR 1.111(b) and (c);

6.4. a concise statement of the utility of the invention as defined in each of the independent claims (unless the application is a design application);

6.5. a showing of where each limitation of the claims finds support under 35 U.S.C. 112, first paragraph, in the written description of the specification. If applicable, the showing must also identify: (1) each means- (or step) plus-function claim element that invokes consideration under 35 U.S.C. 112, sixth paragraph; and (2) the structure, material, or acts in the specification that corresponds to each means- (or step) plus-function claim element that invokes consideration under 35 U.S.C. 112, sixth paragraph; if the application claims the benefit of one or more applications under title 35, United States Code, the showing must also include where each limitation of the claims finds support under 35 U.S.C. 112, first paragraph, in each such application in which such supports exists;

6.6. an identification of any cited references that may be disqualified under 35 U.S.C. 103(c).

REVIEW OF FACTS

The conditions I:1-4, II: 1-5, 5.3, 6, 6.1, 6.2, 6.4, 6.5, and 6.6 above are considered to have been met. However, the petition fails to comply with conditions II : 5.1, 5.2, and 6.3 above.

Therefore, the petition fails to meet the required conditions to be accorded special status under the accelerated examination procedure.

Discussion

When referring to "the petition" hereinbelow, the received papers under consideration include the PTO/SB/28 form, the "pre-examination search document" including pages 1-7; the "accelerated examination support document" comprising pages 1-53, and an Information Disclosure Statement.

Regarding the requirements of section II element 5.1 and 5.2 outlined above, it appears the search outlined in the petition omitted a critical search area by not searching in class 600 subclasses 31; class 128 subclasses Dig. 25, 897 and 898; and class 606 subclasses 140-144, 152-158, 232, and 233.

With respect to the requirements of section II element 6.3 outlined above, the petition fails to provide a detailed explanation of how each of the claims are patentable over (each of) the reference(s) with particularity required by 37 CFR 1.111(b) and (c). Petitioners should be specific in their explanation and include the identification of specific claim limitations that support their position, where appropriate. Petitioners must distinguish each claim from each piece of prior art cited. General statements that the claims are neither anticipated nor rendered obvious by the cited references or that the references are not properly combinable will not be acceptable. The Office cannot infer or guess what petitioner believes the differences between the claims and the teachings of the prior art to be. Petitioner's statements must also be consistent and must be related to the claim language. In the instant petition, the disclaimers for some of the dependent claims, for example claim 2, in this section of the document contradict the information and belief statement that is a requirement of submitting a paper. In other words, applicant cannot file a paper while disclaiming the requirements of the regulation. In order for the accelerated examination support document to be acceptable, the disclaimer language must be removed. A statement that the dependent claims are allowable because the independent claims are patentable is not sufficient. This does not provide guidance to the examiner as to whether the limitations could provide patentability should the examiner find the independent claims unpatentable.

DECISION

For the above-stated reasons, the petition is **dismissed**. The application will therefore be taken up by the examiner for action in its regular turn.

Petitioner is given a single opportunity to perfect the petition. Any request for reconsideration of this decision must be submitted within 1 (one) month or 30 (thirty) days, whichever is longer, (no extension of time under 37 CFR 1.136(a)) from the date of this decision in order to be considered timely. Any request for reconsideration must address all of the deficiencies indicated above.

Petitioner is reminded that, upon granting of the special status of the application on request for reconsideration, the application will be processed expeditiously. However, due to the dismissal of the instant petition, examination may not be completed within twelve months of the filing date of the application.

Any inquiry regarding this decision should be directed to Linda J. Sholl, TC 3700 Special Programs Examiner, at (571) 272-4391.

/Linda J. Sholl/
Linda J. Sholl
Special Programs Examiner
Technology Center 3700

UNITED STATES PATENT AND TRADEMARK OFFICE

Commissioner for Patents
United States Patent and Trademark Office
P.O. Box 1450
Alexandria, VA 22313-1450
www.uspto.gov

NOV 01 2011

Faegre & Benson LLP
90 South Seventh Street
2200 Wells Fargo Center
Minneapolis MN 55402-3901

In re Application of: James Browning Application No.: 13/165525 Filed: June 21, 2011 Title: ADJUSTABLE SURGICAL IMPLANT FOR TREATING URINARY INCONTINENCE	DECISION ON PETITION TO MAKE SPECIAL FOR NEW APPLICATION UNDER 37 C.F.R. § 1.102 & M.P.E.P. § 708.02

This is a decision on the renewed petition filed on October 19, 2011 to make the above-identified application special for accelerated examination procedure under 37 C.F.R. § 1.102(d).

The petition to make the application special is GRANTED.

The application is eligible for accelerated examination and the petition complies with the conditions for granting the application special status pursuant to the "Change to Practice for Petitions in Patent Applications to Make Special and for Accelerated Examination" published June 26, 2006, in the Federal Register. (71 Fed. Reg. 36323).

The prosecution of the instant application will be conducted expeditiously according to the following guidelines.

1. The application will be docketed to an examiner and taken up for action within two weeks of the date of this decision.

2. Restriction Practice:
   If the examiner determines that the claims are not directed to a single invention, a telephone request to elect one single invention will be made pursuant to MPEP 812.01. As a prerequisite to the grant of this petition, the applicant has agreed to make an oral election, by telephone, without traverse. If the applicant refuses to make an election without traverse, or the examiner cannot reach the applicant after a reasonable effort, the examiner will treat the first claimed invention (invention defined by claim 1) as having being constructively elected without traverse for examination.

3. Office action:
   If it is determined that, after appropriate consultation, there is a potential rejection or any other issue to be addressed, the examiner will telephone the applicant and arrange an interview to discuss and resolve the issue. An Office action, other than a Notice of Allowance and Fee(s) Due (Notice of Allowance), will not be issued unless either: 1) an interview was conducted but did not result in agreed to action that places the application in condition for allowance, or, 2) a determination is made that an interview would be unlikely to result in the application being placed in condition for allowance, and 3) an internal conference has been held to review any rejection of any claim.

4. Time for Reply:
   An Office action other than a Notice of Allowance or a final Office action will set a shortened statutory period of one month or thirty days, whichever is longer, for reply with no extension of time available under 37 CFR 1.136(a). Failure to timely file a reply within this non-extendible period for reply will result in the abandonment of the application.

5. Reply by Applicant:
   A timely reply to an Office action other than the Notice of Allowance must be submitted electronically via EFS or EFS-web and limited to addressing the rejections, objections and requirement made. Any amendment that attempts to: 1) add claims which would result in more than three pending independent claims or more than twenty pending total claims; 2) present claims not encompassed by the pre-examination search or an updated accelerated examination support document; or 3) present claims that are directed a non-elected invention or an invention other than that previously claimed and examined in the application, will be treated as not fully responsive and will not be entered.

   For any amendment to the claims (including any new claim) that is not encompassed by the accelerated examination support document, applicant must provide an updated accelerated examination support document that encompasses the amended or new claims at the time of filing of the amendment.

   To proceed expeditiously with the examination, it is recommended that a reply with amendments made to any claim or with any new claim being added be accompanied by an updated accelerated examination support document or a statement explaining how the amended or new claim is supported by the original accelerated examination support document.

6. Information Disclosure Statement (IDS):
   Any IDS filed during prosecution must be submitted electronically via EFS or EFS-web, accompanied by an updated accelerated examination support document, and be in compliance with 37 CFR 1.97 and 1.98.

7. Post-Allowance Processing:
   To expedite processing of the allowed application into a patent, the applicant must: 1) pay the required fees within one month of the date of the Notice of Allowance, and 2) not file any post allowance papers not required by the Office. In no event may the issue fee be paid and accepted later than three months from the date of the Notice of Allowance.

8. After-Final and Appeal Procedures:
   To expedite prosecution, after receiving the final Office action, applicant must: 1) promptly file a notice of appeal, an appeal brief and appeal fees; and 2) not request a pre-appeal brief conference.

   Any amendment, affidavit or other evidence filed after final Office action must comply with applicable rules and the requirements outlined in numbered paragraphs 5 and 6 above.

   On appeal, the application will proceed according to normal appeal procedures. After appeal, the application will again be treated special.

9. Proceedings Outside the Normal Examination Process:
   If the application becomes involved in a proceeding that is outside the normal examination process (e.g., a secrecy order, national security review, interference proceeding, petitions under 37 CFR 1.181, 182 or 183), the application will be treated special before and after such proceeding.

10. Final Disposition:
    The twelve month goal of this accelerated examination procedure ends with a final disposition. The mailing of a final Office action, a Notice of Allowance, the filing of a Notice of Appeal, or the filing of a Request for Continued Examination (RCE) is the final disposition.

If, during prosecution, a paper is not filed electronically using EFS-web, a reply is filed but is not fully responsive, the application is involved in an appeal, or a proceeding outside normal examination process, the application will still be examined expeditiously, however, the final disposition may occur more than twelve months from the filing of the application.

Any inquiry regarding this decision should be directed to Linda Sholl at (571) 272-4391

/Linda Sholl/
Linda Sholl
Special Programs Examiner
Technology Center 3700

UNITED STATES PATENT AND TRADEMARK OFFICE

UNITED STATES DEPARTMENT OF COMMERCE
United States Patent and Trademark Office
Address: COMMISSIONER FOR PATENTS
P.O. Box 1450
Alexandria, Virginia 22313-1450
www.uspto.gov

APPLICATION NO.	FILING DATE	FIRST NAMED INVENTOR	ATTORNEY DOCKET NO.	CONFIRMATION NO.
13/165,538	06/21/2011	Seigo Nakao	733156.411C2	4050

96896 7590 07/20/2011
Seed Intellectual Property Law Group PLLC
701 Fifth Avenue, Suite 5400
Seattle, WA 98104

EXAMINER

ART UNIT	PAPER NUMBER
2611	

NOTIFICATION DATE	DELIVERY MODE
07/20/2011	ELECTRONIC

Please find below and/or attached an Office communication concerning this application or proceeding.

The time period for reply, if any, is set in the attached communication.

Notice of the Office communication was sent electronically on above-indicated "Notification Date" to the following e-mail address(es):

jeffs.docketing@seedip.com

UNITED STATES PATENT AND TRADEMARK OFFICE

Commissioner for Patents
United States Patent and Trademark Office
P.O. Box 1450
Alexandria, VA 22313-1450
www.uspto.gov

Seed Intellectual Property Law Group PLLC
701 Fifth Avenue, Suite 5400
Seattle WA 98104

In re Application of
NAKAO et al.
Application No.: 13/165,538
Filed: 21 June 2011
Attorney Docket No.: 733156.411C2
For: RADIO COMMUNICATION APPARATUS AND REFERENCE SIGNAL GENERATING METHOD

: DECISION ON REQUEST TO
: PARTICIPATE IN THE PATENT
: PROSECUTION HIGHWAY
: PROGRAM AND PETITION
: TO MAKE SPECIAL UNDER
: 37 CFR 1.102(a)

This is a decision on the request to participate in the Patent Prosecution Highway (PPH) program and the petition under 37 CFR 1.102(a), filed 22 June 2011, to make the above-identified application special.

The request and petition are **DISMISSED**.

A grantable request to participate in the PPH program and petition to make special require:

1. The U.S. application must validly claim priority under 35 U.S.C. 119(a) to one or more applications filed in the JPO, note where the JPO application with similar claims is not the same application from which the U.S. application claims priority then the applicant must identify the relationship between the JPO application with similar claims and the JPO priority application;

2. Applicant must submit a copy of:
   a. The allowable/patentable claim(s) from the JPO application(s) or if a copy of the allowable/patentable claims is available via the Dossier Access System (DAS) applicant may request the USPTO obtain a copy from the DAS, however if the USPTO is unable to obtain a copy from the DAS the applicant will be required to submit a copy;
   b. An English translation of the allowable/patentable claim(s) and
   c. A statement that the English translation is accurate;

3. Applicant must
   a. Ensure all the claims in the U.S. application must sufficiently correspond or be amended to sufficiently correspond to the allowable/patentable claim(s) in the JPO application(s) and
   b. Submit a claims correspondence table in English;

4. Examination of the U.S. application has not begun;

5. Applicant must submit:
    a. Documentation of prior office action:
        i. a copy of the office action(s) just prior to the "Decision to Grant a Patent" from each of the JPO application(s) containing the allowable/patentable claim(s) or
        ii. if the allowable/patentable claims(s) are from a "Notification of Reasons for Refusal" then the Notification of Reasons for Refusal or
        iii. if the JPO application is a first action allowance then no office action from the JPO is necessary should be indicated on the request/petition form;

    Further, if a copy of the documents from a or b above is available via the Dossier Access System (DAS) applicant may request the USPTO obtain a copy from the DAS, however if the USPTO is unable to obtain a copy from the DAS the applicant will be required to submit a copy;
    b. An English language translation of the JPO Office action from (5)(a)(i)-(ii) above
    c. A statement that the English translation is accurate (if the translation is not a machine translation provided by the JPO);

6. Applicant must submit:
    a. An IDS listing the documents cited by the JPO examiner in the JPO office action (unless already submitted in this application)
    b. Copies of the documents except U.S. patents or U.S. patent application publications (unless already submitted in this application);

Conditions (1-4) above are considered to have been met. However, the request to participate in the PPH pilot program and petition fails meet conditions (5) and (6).

Regarding the requirement of condition (5), applicant has failed to submit a complete translation of the JPO office action. The prior art citation section of the office action has not been translated.

Regarding the requirement of condition (6), applicant has failed to provide an IDS list all the prior art cited by the JPO examiner. There appear to be two NPL references cited by the JPO examiner that have not been listed on an IDS nor have copies been provided.

Applicant is given **ONE** opportunity within a time period of **ONE MONTH or THIRTY DAYS**, whichever is longer, from the mailing date of this decision to correct the deficiencies. **NO EXTENSION OF TIME UNDER 37 CFR 1.136 IS PERMITTED.** If the deficiencies are not corrected with the time period given, the application will await action in its regular turn.

Response must be filed via the Electronic Filing System (EFS) using the document description: Petition to make special under Patent Pros Hwy. Any preliminary amendments and IDS submitted with the PPH documents must be separately indexed as a preliminary amendment and IDS, respectively.

Telephone inquiries concerning this decision should be directed to Lee W. Young at 571-272-4549.

All other inquiries concerning the examination or status of the application is accessible in the PAIR system at http://www.uspto.gov/ebc/index.html.

Lee W. Young
TQAS Technology Center 2600

UNITED STATES PATENT AND TRADEMARK OFFICE

UNITED STATES DEPARTMENT OF COMMERCE
United States Patent and Trademark Office
Address: COMMISSIONER FOR PATENTS
P.O. Box 1450
Alexandria, Virginia 22313-1450
www.uspto.gov

APPLICATION NO.	FILING DATE	FIRST NAMED INVENTOR	ATTORNEY DOCKET NO.	CONFIRMATION NO.
13/165,538	06/21/2011	Seigo Nakao	733156.411C2	4050

96896 7590 08/05/2011
Seed Intellectual Property Law Group PLLC
701 Fifth Avenue, Suite 5400
Seattle, WA 98104

EXAMINER

ART UNIT	PAPER NUMBER
2611	

NOTIFICATION DATE	DELIVERY MODE
08/05/2011	ELECTRONIC

Please find below and/or attached an Office communication concerning this application or proceeding.

The time period for reply, if any, is set in the attached communication.

Notice of the Office communication was sent electronically on above-indicated "Notification Date" to the following e-mail address(es):

patentinfo@seedip.com

UNITED STATES PATENT AND TRADEMARK OFFICE

Commissioner for Patents
United States Patent and Trademark Office
P.O. Box 1450
Alexandria, VA 22313-1450
www.uspto.gov

Seed Intellectual Property Law Group PLLC
701 Fifth Avenue, Suite 5400
Seattle WA 98104

In re Application of	
NAKAO et al.	**: DECISION ON REQUEST TO**
Application No.: 13/165,538	**: PARTICIPATE IN THE PATENT**
Filed: 21 June 2011	**: PROSECUTION HIGHWAY**
Attorney Docket No.: 733156.411C2	**: PROGRAM AND PETITION**
For: RADIO COMMUNICATION	**: TO MAKE SPECIAL UNDER**
APPARATUS AND REFERENCE	**: 37 CFR 1.102(a)**
SIGNAL GENERATING METHOD	

This is a decision on the request to participate in the Patent Prosecution Highway (PPH) program and the petition under 37 CFR 1.102(a), filed 22 June 2011 and renewed 27 July 2011, to make the above-identified application special.

The request and petition are **GRANTED**.

Discussion

A grantable request to participate in the PPH pilot program and petition to make special require:

1. The U.S. application is

    a. a Paris Convention application which either
        i. validly claims priority under 35 U.S.C. 119(a) and 37 CFR 1.55 to one or more applications filed in the JPO, or
        ii. validly claims priority to a PCT application that contains no priority claims, or
    b. a national stage application under the PCT (an application which entered the national stage in the U.S. from a PCT international application after compliance with 35 U.S.C. 371), which PCT application
        i. validly claims priority to an application filed in the JPO, or
        ii. validly claims priority to a PCT application that contains no priority claims, or
        iii. contains no priority claim, or
    c. a so-called bypass application filed under 35 U.S.C. 111(a) which validly claims benefit under 35 U.S.C. 120 to a PCT application, which PCT application
        i. validly claims priority to an application filed in the JPO, or
        ii. validly claims priority to a PCT application that contains no priority claims, or

iii. contains no priority claim;

2. Applicant must submit a copy of:
   a. The allowable/patentable claim(s) from the JPO application(s);
   b. An English translation of the allowable/patentable claim(s) and
   c. A statement that the English translation is accurate;
3. Applicant must:
   a. Ensure all the claims in the U.S. application must sufficiently correspond or be amended to sufficiently correspond to the allowable/patentable claim(s) in the JPO application(s) and
   b. Submit a claims correspondence table in English;
4. Examination of the U.S. application has not begun;
5. Applicant must submit:
   a. Documentation of prior office action:
      i. a copy of the office action(s) just prior to the "Decision to Grant a Patent" from each of the JPO application(s) containing the allowable/patentable claim(s) or
      ii. if the allowable/patentable claims(s) are from a "Notification of Reasons for Refusal" then the Notification of Reasons for Refusal or
      iii. if the JPO application is a first action allowance then no office action from the JPO is necessary should be indicated on the request/petition form;
   b. An English language translation of the JPO Office action from (5)(a)(i)-(ii) above
   c. A statement that the English translation is accurate;
6. Applicant must submit:
   a. An IDS listing the documents cited by the JPO examiner in the JPO office action (unless already submitted in this application)
   b. Copies of the documents except U.S. patents or U.S. patent application publications (unless already submitted in this application);

The request to participate in the PPH pilot program and petition comply with the above requirements. Accordingly, the above-identified application has been accorded "special" status.

Inquiries concerning this decision should be directed to Lee W. Young at 571-272-4549.

All other inquiries concerning the examination or status of the application is accessible in the PAIR system at http://www.uspto.gov/ebc.index.html.

This application will be forwarded to the examiner for action on the merits commensurate with this decision once this application's formality reviews have been completed.

Lee W. Young
TQAS, Technology Center 2600

UNITED STATES PATENT AND TRADEMARK OFFICE

Commissioner for Patents
United States Patent and Trademark Office
P.O. Box 1450
Alexandria, VA 22313-1450
www.uspto.gov

Faegre & Benson LLP
90 South Seventh Street
2200 Wells Fargo Center
Minneapolis MN 55402-3901

SEP 2 0 2011

In re Application of: James Browning Application No.: 13/165561 Filed: June 21, 2011 Title: METHOD FOR IMPLANTING AN ADJUSTABLE SURGICAL IMPLANT FOR TREATING URINARY INCONTINENCE	DECISION ON PETITION TO MAKE SPECIAL FOR NEW APPLICATION UNDER 37 C.F.R. § 1.102 & M.P.E.P. § 708.02

This is a decision on the petition filed on June 21, 2011 to make the above-identified application special for accelerated examination procedure under 37 C.F.R. § 1.102(d).

The petition to make the application special is **DISMISSED**.

REGULATION AND PRACTICE

A grantable petition to make special under 37 C.F.R. § 1.102(d) and pursuant to the "Change to Practice for Petitions in Patent Applications to Make Special and for Accelerated Examination" published in the Federal Register on June 26, 2006 (71 Fed. Reg. 36323), must satisfy the following conditions:

I. Conditions Regarding the Application:

1. the application must be a non-reissue utility or design application filed under 37 CFR 1.111(a);

2. the application, the petition and the required fees must be filed electronically using the USPTO's electronic filing system (EFS), or EFS-web; if not filed electronically, a statement asserting that EFS and EFS-web were not available during the normal business hours.

3. at the time of filing, the application must be complete under 37 CFR 1.51 and in condition for examination;

4. the application must contain three or fewer independent claims and twenty or fewer total claims and the claims must be directed to a single invention.

II. Conditions Regarding the Petition:

The petition must:

1. be filed with the application;

2. include a statement that applicant agrees not to separately argue the patentability of any independent claim during any appeal in the application;

3. include a statement that applicant agrees to make an election without traverse in a telephone interview.

4. include a statement that applicant agrees to conduct such an interview when requested by the examiner.

5. include a statement, made based on a good faith belief, that a preexamination search in compliance with the following requirements, was conducted, including an identification of the field of search by United States class and subclass, where applicable, and for database searches, the search logic or chemical structure or sequence used as a query, the name of the file(s) searched and the database service, and the date of the search.

The preexamination search must:

5.1 involve U.S. patents and patent application publications, foreign patent documents, and non-patent literature, unless the applicant can justify with reasonable certainty that no references more pertinent than those already identified are likely to be found in the eliminated sources and includes such a justification with this statement;

5.2. be directed to the claimed invention and encompass all of the features of the claims, giving the claims the broadest reasonable interpretation;

5.3. encompass the disclosed features that may be claimed.

6. must provide in support of the petition an accelerated examination support document. An accelerated examination support document must include:

6.1. an information disclosure statement (IDS) in compliance with 37 CFR 1.98 citing each reference deemed most closely related to the subject matter of each of the claims;

6.2. an identification of all the limitations in the claims that are disclosed by the reference specifying where the limitation is disclosed in the cited reference;

6.3. a detailed explanation of how each of the claims are patentable over the references cited with particularity required by 37 CFR 1.111(b) and (c);

6.4. a concise statement of the utility of the invention as defined in each of the independent claims (unless the application is a design application);

6.5. a showing of where each limitation of the claims finds support under 35 U.S.C. 112, first paragraph, in the written description of the specification. If applicable, the showing must also identify: (1) each means- (or step) plus-function claim element that invokes consideration under 35 U.S.C. 112, sixth paragraph; and (2) the structure, material, or acts in the specification that corresponds to each means- (or step) plus-function claim element that invokes consideration under 35 U.S.C. 112, sixth paragraph; if the application claims the benefit of one or more applications under title 35, United States Code, the showing must also include where each limitation of the claims finds support under 35 U.S.C. 112, first paragraph, in each such application in which such supports exists;

6.6. an identification of any cited references that may be disqualified under 35 U.S.C. 103(c).

REVIEW OF FACTS

The conditions I:1-4, II: 1-5, 5.3, 6, 6.1, 6.2, 6.4, 6.5, and 6.6 above are considered to have been met. However, the petition fails to comply with conditions II : 5.1, 5.2, and 6.3 above.

Therefore, the petition fails to meet the required conditions to be accorded special status under the accelerated examination procedure.

Discussion

When referring to "the petition" hereinbelow, the received papers under consideration include the PTO/SB/28 form, the "pre-examination search document" including pages 1-7; the "accelerated examination support document" comprising pages 1-53, and an Information Disclosure Statement.

Regarding the requirements of section II element 5.1 and 5.2 outlined above, it appears the search outlined in the petition omitted a critical search area by not searching in class 600 subclasses 31; class 128 subclasses Dig. 25, 897 and 898; and class 606 subclasses 140-144, 152-158, 232, and 233.

With respect to the requirements of section II element 6.3 outlined above, the petition fails to provide a detailed explanation of how each of the claims are patentable over (each of) the reference(s) with particularity required by 37 CFR 1.111(b) and (c). Petitioners should be specific in their explanation and include the identification of specific claim limitations that support their position, where appropriate. Petitioners must distinguish each claim from each piece of prior art cited. General statements that the claims are neither anticipated nor rendered obvious by the cited references or that the references are not properly combinable will not be acceptable. The Office cannot infer or guess what petitioner believes the differences between the claims and the teachings of the prior art to be. Petitioner's statements must also be consistent and must be related to the claim language. In the instant petition, the disclaimers for some of the dependent claims, for example claim 2, in this section of the document contradict the information and belief statement that is a requirement of submitting a paper. In other words, applicant cannot file a paper while disclaiming the requirements of the regulation. In order for the accelerated examination support document to be acceptable, the disclaimer language must be removed. A statement that the dependent claims are allowable because the independent claims are patentable is not sufficient. This does not provide guidance to the examiner as to whether the limitations could provide patentability should the examiner find the independent claims unpatentable.

DECISION

For the above-stated reasons, the petition is **dismissed**. The application will therefore be taken up by the examiner for action in its regular turn.

Petitioner is given a single opportunity to perfect the petition. Any request for reconsideration of this decision must be submitted within 1 (one) month or 30 (thirty) days, whichever is longer, (no extension of time under 37 CFR 1.136(a)) from the date of this decision in order to be considered timely. Any request for reconsideration must address all of the deficiencies indicated above.

Petitioner is reminded that, upon granting of the special status of the application on request for reconsideration, the application will be processed expeditiously. However, due to the dismissal of the instant petition, examination may not be completed within twelve months of the filing date of the application.

Any inquiry regarding this decision should be directed to Linda J. Sholl, TC 3700 Special Programs Examiner, at (571) 272-4391.

/Linda J. Sholl/
Linda J. Sholl
Special Programs Examiner
Technology Center 3700

UNITED STATES PATENT AND TRADEMARK OFFICE

Commissioner for Patents
United States Patent and Trademark Office
P.O. Box 1450
Alexandria, VA 22313-1450
www.uspto.gov

NOV 01 2011

Faegre & Benson LLP
90 South Seventh Street
2200 Wells Fargo Center
Minneapolis MN 55402-3901

In re Application of: James Browning Application No.: 13/165561 Filed: June 21, 2011 Title: METHOD FOR IMPLANTING AN ADJUSTABLE SURGICAL IMPLANT FOR TREATING URINARY INCONTINENCE	DECISION ON PETITION TO MAKE SPECIAL FOR NEW APPLICATION UNDER 37 C.F.R. § 1.102 & M.P.E.P. § 708.02

This is a decision on the renewed petition filed on October 19, 2011 to make the above-identified application special for accelerated examination procedure under 37 C.F.R. § 1.102(d).

The petition to make the application special is GRANTED.

The application is eligible for accelerated examination and the petition complies with the conditions for granting the application special status pursuant to the "Change to Practice for Petitions in Patent Applications to Make Special and for Accelerated Examination" published June 26, 2006, in the Federal Register. (71 Fed. Reg. 36323).

The prosecution of the instant application will be conducted expeditiously according to the following guidelines.

1. The application will be docketed to an examiner and taken up for action within two weeks of the date of this decision.

2. Restriction Practice:
   If the examiner determines that the claims are not directed to a single invention, a telephone request to elect one single invention will be made pursuant to MPEP 812.01. As a prerequisite to the grant of this petition, the applicant has agreed to make an oral election, by telephone, without traverse. If the applicant refuses to make an election without traverse, or the examiner cannot reach the applicant after a reasonable effort, the examiner will treat the first claimed invention (invention defined by claim 1) as having being constructively elected without traverse for examination.

3. Office action:
   If it is determined that, after appropriate consultation, there is a potential rejection or any other issue to be addressed, the examiner will telephone the applicant and arrange an interview to discuss and resolve the issue. An Office action, other than a Notice of Allowance and Fee(s) Due (Notice of Allowance), will not be issued unless either: 1) an interview was conducted but did not result in agreed to action that places the application in condition for allowance, or, 2) a determination is made that an interview would be unlikely to result in the application being placed in condition for allowance, and 3) an internal conference has been held to review any rejection of any claim.

4. Time for Reply:
   An Office action other than a Notice of Allowance or a final Office action will set a shortened statutory period of one month or thirty days, whichever is longer, for reply with no extension of time available under 37 CFR 1.136(a). Failure to timely file a reply within this non-extendible period for reply will result in the abandonment of the application.

5. Reply by Applicant:
   A timely reply to an Office action other than the Notice of Allowance must be submitted electronically via EFS or EFS-web and limited to addressing the rejections, objections and requirement made. Any amendment that attempts to: 1) add claims which would result in more than three pending independent claims or more than twenty pending total claims; 2) present claims not encompassed by the pre-examination search or an updated accelerated examination support document; or 3) present claims that are directed a non-elected invention or an invention other than that previously claimed and examined in the application, will be treated as not fully responsive and will not be entered.

   For any amendment to the claims (including any new claim) that is not encompassed by the accelerated examination support document, applicant must provide an updated accelerated examination support document that encompasses the amended or new claims at the time of filing of the amendment.

   To proceed expeditiously with the examination, it is recommended that a reply with amendments made to any claim or with any new claim being added be accompanied by an updated accelerated examination support document or a statement explaining how the amended or new claim is supported by the original accelerated examination support document.

6. Information Disclosure Statement (IDS):
   Any IDS filed during prosecution must be submitted electronically via EFS or EFS-web, accompanied by an updated accelerated examination support document, and be in compliance with 37 CFR 1.97 and 1.98.

7. Post-Allowance Processing:
   To expedite processing of the allowed application into a patent, the applicant must: 1) pay the required fees within one month of the date of the Notice of Allowance, and 2) not file any post allowance papers not required by the Office. In no event may the issue fee be paid and accepted later than three months from the date of the Notice of Allowance.

8. After-Final and Appeal Procedures:
   To expedite prosecution, after receiving the final Office action, applicant must: 1) promptly file a notice of appeal, an appeal brief and appeal fees; and 2) not request a pre-appeal brief conference.

   Any amendment, affidavit or other evidence filed after final Office action must comply with applicable rules and the requirements outlined in numbered paragraphs 5 and 6 above.

   On appeal, the application will proceed according to normal appeal procedures. After appeal, the application will again be treated special.

9. Proceedings Outside the Normal Examination Process:
   If the application becomes involved in a proceeding that is outside the normal examination process (e.g., a secrecy order, national security review, interference proceeding, petitions under 37 CFR 1.181, 182 or 183), the application will be treated special before and after such proceeding.

10. Final Disposition:
    The twelve month goal of this accelerated examination procedure ends with a final disposition. The mailing of a final Office action, a Notice of Allowance, the filing of a Notice of Appeal, or the filing of a Request for Continued Examination (RCE) is the final disposition.

If, during prosecution, a paper is not filed electronically using EFS-web, a reply is filed but is not fully responsive, the application is involved in an appeal, or a proceeding outside normal examination process, the application will still be examined expeditiously, however, the final disposition may occur more than twelve months from the filing of the application.

Any inquiry regarding this decision should be directed to Linda Sholl at (571) 272-4391

/Linda Sholl/
Linda Sholl
Special Programs Examiner
Technology Center 3700

Doc code : PET.OP.AGE
Description : Petition to make special based on Age/Health

PTO/SB/130 (07-09)
Approved for use through 07/31/2012. OMB 0651- 0031
U.S. Patent and Trademark Office; U.S. DEPARTMENT OF COMMERCE
Under the Paperwork Reduction Act of 1995, no persons are required to respond to a collection of information unless it contains a valid OMB control number

PETITION TO MAKE SPECIAL BASED ON AGE FOR ADVANCEMENT OF EXAMINATION UNDER 37 CFR 1.102(c)(1)

Application Information

Application Number	13/165,590	Confirmation Number	4148	Filing Date	2011-06-21
Attorney Docket Number (optional)	7682P026X	Art Unit		Examiner	
First Named Inventor	Hussein S. El-Ghoroury				
Title of Invention	Alternating Bias Hot Carrier Solar Cells				

Attention: Office of Petitions
An application may be made special for advancement of examination upon filing of a petition showing that the applicant is 65 years of age, or more. No fee is required with such a petition. See 37 CFR 1.102(c)(1) and MPEP 708.02 (IV).

APPLICANT HEREBY PETITIONS TO MAKE SPECIAL FOR ADVANCEMENT OF EXAMINATION IN THIS APPLICATION UNDER 37 CFR 1.102(c)(1) and MPEP 708.02 (IV) ON THE BASIS OF THE APPLICANT'S AGE.

A grantable petition requires one of the following items:
(1) Statement by one named inventor in the application that he/she is 65 years of age, or more; or
(2) Certification by a registered attorney/agent having evidence such as a birth certificate, passport, driver's license, etc. showing one named inventor in the application is 65 years of age, or more.

Name of Inventor who is 65 years of age, or older

Given Name	Middle Name	Family Name	Suffix
Dale	A.	McNeill	

A signature of the applicant or representative is required in accordance with 37 CFR 1.33 and 10.18.
Please see 37 CFR 1.4(d) for the format of the signature.

Select (1) or (2) :

○ (1) I am an inventor in this application and I am 65 years of age, or more.

● (2) I am an attorney or agent registered to practice before the Patent and Trademark Office, and I certify that I am in possession of evidence, and will retain such in the application file record, showing that the inventor listed above is 65 years of age, or more.

Signature	/RWB/	Date (YYYY-MM-DD)	2011-08-02
Name	Roger W. Blakely, Jr.	Registration Number	25831

PTO/SB/130 (07-09)
Approved for use through 07/31/2012. OMB 0651- 0031
U.S. Patent and Trademark Office; U.S. DEPARTMENT OF COMMERCE
Under the Paperwork Reduction Act of 1995, no persons are required to respond to a collection of information unless it contains a valid OMB control number

Privacy Act Statement

The Privacy Act of 1974 (P.L. 93-579) requires that you be given certain information in connection with your submission of the attached form related to a patent application or patent. Accordingly, pursuant to the requirements of the Act, please be advised that: (1) the general authority for the collection of this information is 35 U.S.C. 2(b)(2); (2) furnishing of the information solicited is voluntary; and (3) the principal purpose for which the information is used by the U.S. Patent and Trademark Office is to process and/or examine your submission related to a patent application or patent. If you do not furnish the requested information, the U.S. Patent and Trademark Office may not be able to process and/or examine your submission, which may result in termination of proceedings or abandonment of the application or expiration of the patent.

The information provided by you in this form will be subject to the following routine uses:

1. The information on this form will be treated confidentially to the extent allowed under the Freedom of Information Act (5 U.S.C. 552) and the Privacy Act (5 U.S.C. 552a). Records from this system of records may be disclosed to the Department of Justice to determine whether the Fr eedom of Information Act requires disclosure of these records.

2. A record from this system of records may be disclosed, as a routine use, in the course of presenting evidence to a court, magistrate, or administrative tribunal, including disclosures to opposing counsel in the course of settlement negotiations.

3. A record in this system of records may be disclosed, as a routine use, to a Member of Congress submitting a request involving an individual, to whom the record pertains, when the individual has requested assistance from the Member with respect to the subject matter of the record.

4. A record in this system of records may be disclosed, as a routine use, to a contractor of the Agency having need for the information in order to perform a contract. Recipients of information shall be required to comply with the requirements of the Privacy Act of 1974, as amended, pursuant to 5 U.S.C. 552a(m).

5. A record related to an International Application filed under the Patent Cooperation Treaty in this system of records may be disclosed, as a routine use, to the International Bureau of the World Intellectual Property Organization, pursuant to the Patent Cooperation Treaty.

6. A record in this system of records may be disclosed, as a routine use, to another federal agency for purposes of National Security review (35 U.S.C. 181) and for review pursuant to the Atomic Energy Act (42 U.S.C. 218(c)).

7. A record from this system of records may be disclosed, as a routine use, to the Administrator, General Services, or his/her designee, during an inspection of records conducted by GSA as part of that agency's responsibility to recommend improvements in records management practices and programs, under authority of 44 U.S.C. 2904 and 2906. Such disclosure shall be made in accordance with the GSA regulations governing inspection of records for this purpose, and any other relevant (i.e., GSA or Commerce) directive. Such disclosure shall not be used to make determinations about indivi duals.

8. A record from this system of records may be disclosed, as a routine use, to the public after either publication of the application pursuant to 35 U.S.C. 122(b) or issuance of a patent pursuant to 35 U.S.C. 151. Further, a record may be disclosed, subject to the limitations of 37 CFR 1.14, as a routine use, to the public if the record was filed in an application which became abandoned or in which the proceedings were terminated and which application is referenced by either a published application, an application open to public inspections or an issued patent.

9. A record from this system of records may be disclosed, as a routine use, to a Federal, State, or local law enforcement agency, if the USPTO becomes aware of a violation or potential violation of law or regulation.

UNITED STATES PATENT AND TRADEMARK OFFICE

Commissioner for Patents
United States Patent and Trademark Office
P.O. Box 1450
Alexandria, VA 22313-1450
www.uspto.gov

In re Application of
Hussein S. El-Ghoroury

Application No. 13165590

Filed: June 21,2011

Attorney Docket No. 7682P026X

:DECISION ON PETITION TO MAKE SPECIAL
:UNDER 37 CFR 1.102(c)(1)

This is a decision on the electronic petition under 37 CFR 1.102 (c)(1), filed 02-AUG-2011 to make the above-identified application special based on applicant's age as set forth in MPEP § 708.02, Section IV.

The petition is **GRANTED**.

A grantable petition to make an application special under 37 CFR 1.102(c)(1), MPEP § 708.02, Section IV: Applicant's Age must include a statement by applicant or a registered practitioner having evidence that applicant is at least 65 years of age. No fee is required.

Accordingly, the above-identified application has been accorded "special" status and will be taken up for action by the examiner upon the completion of all pre-examination processing.

Telephone inquiries concerning this electronic decision should be directed to the Electronic Business Center at 866-217-9197.

All other inquiries concerning either the examination or status of the application should be directed to the Technology Center.

UNITED STATES PATENT AND TRADEMARK OFFICE

Commissioner for Patents
United States Patent and Trademark Office
P.O. Box 1450
Alexandria, VA 22313-1450
www.uspto.gov

PRADIP K. SAHU
3123 W. HOLDEN CIRCLE
MATTESON IL 60443

MAILED
JUL 05 2011
OFFICE OF PETITIONS

In re Application of	:	
Norbert Tobbe	:	
Application No. 13/165,669	:	DECISION ON PETITION
Filed: June 21, 2011	:	TO MAKE SPECIAL UNDER
Attorney Docket No. NORGE1	:	37 CFR 1.102(c)(1)
	:	

This is a decision on the petition under 37 CFR 1.102(c)(1), filed June 21, 2011, to make the above-identified application special based on applicant's age as set forth in M.P.E.P. § 708.02, Section IV.

The petition is **GRANTED.**

A grantable petition to make an application special under 37 CFR 1.102(c)(1) and MPEP § 708.02, Section IV: Applicant's Age must be accompanied by evidence showing that at least one of the applicants is 65 years of age, or more, such as a birth certificate or a statement by applicant. No fee is required

The instant petition includes a statement by an attorney by inventor Norbert Tobbe attesting to his/her age. The above-identified application has been accorded "special" status.

Telephone inquiries concerning this decision should be directed to Kimberly Inabinet at 571-272-4618.

All other inquiries concerning either the examination or status of the application should be directed to the Technology Center.

Upon completion of the pre-examination processing by the Office of Patent Application Processing, this application will be referred to Technology Center 3633 for action on the merits commensurate with this decision.

/Kimberly Inabinet/

Kimberly Inabinet
Petitions Examiner
Office of Petitions

Doc Code: PET.GREEN
Document Description: Petition for Green Tech Pilot

PTO/SB/420 (03-11)

PETITION TO MAKE SPECIAL UNDER THE GREEN TECHNOLOGY PILOT PROGRAM

Attorney Docket Number: 11770-US-NP	Application Number (if known): 13/165,696	Filing date: June 21, 2011

First Named Inventor: Amanda Fischer

Title: Polypeptides having C4 Dicarboxylic Acid Transporter Activity and Polynucleotides Encoding Same

APPLICANT HEREBY REQUESTS TO PARTICIPATE IN THE GREEN TECHNOLOGY PILOT PROGRAM FOR THE ABOVE-IDENTIFIED APPLICATION. See Instruction Sheet on page 2.

This petition must be timely filed electronically using the USPTO electronic filing system, EFS-Web.

1. By filing this petition:

   Applicant is requesting early publication: Applicant hereby requests early publication under 37 CFR 1.219 and the publication fee set forth in 37 CFR 1.18(d) accompanies this request.

2. By filing this petition: applicant is agreeing to make an election without traverse in a telephonic interview and elect an invention that meets the eligibility requirements for the Green Technology Pilot Program, if the Office determines that the claims are not obviously directed to a single invention. See Instruction Sheet.

3. This request is accompanied by statements of special status for the eligibility requirement.

4. The application contains no more than three (3) independent claims and twenty (20) total claims.

5. The application does not contain any multiple dependent claims.

6. Other attachments: _____

Signature /Eric J. Fechter/	Date 12-22-2011
Name (Print/Typed) Eric J. Fechter	Registration Number 60,588

***Note**: Signatures of all the inventors or assignees of record of the entire interest or their representative(s) are required in accordance with 37 CFR 1.33 and 11.18. Please see 37 CFR 1.4(d) for the form of the signature. If necessary, submit multiple forms for more than one signature, see below*.*

☐ *Total of _____ forms are submitted.

If you need assistance in completing the form, call 1-800-PTO-9199 and select option 2.

Instruction Sheet for
Petition to Make Special Under the Green Technology Pilot Program

(Not to be Submitted to the USPTO)

The following is a summary of the requirements (for more information see the notices (i) "Pilot Program for Green Technologies Including Greenhouse Gas Reduction," (ii) "Elimination of Classification Requirement in the Green Technology Pilot Program," and (iii) "Expansion and Extension of the Green Technology Pilot Program," available on the USPTO web site at http://www.uspto.gov/patents/init_events/green_tech.jsp):

(1) The application must be a non-reissue, non-provisional utility application filed under 35 U.S.C. 111(a), or an international application that has entered the national stage in compliance with 35 U.S.C. 371, irrespective of the filing date of the application. Reexamination proceedings are excluded from this pilot program.

(2) The application must contain three or fewer independent claims and twenty or fewer total claims. The application must not contain any multiple dependent claims. For an application that contains more than three independent claims or twenty total claims, or multiple dependent claims, applicant must file a preliminary amendment in compliance with 37 CFR 1.121 to cancel the excess claims and/or the multiple dependent claims at the time the petition to make special is filed.

(3) The claims must be directed to a single invention that materially enhances the quality of the environment, or that materially contributes to: (1) the discovery or development of renewable energy resources; (2) the more efficient utilization and conservation of energy resources; or (3) green house gas emission reduction (see the eligibility requirements of sections II and III of the notice (i) cited above). The petition must include a statement that, if the USPTO determines that the claims are directed to multiple inventions (e.g., in a restriction requirement), applicant will agree to make an election without traverse in a telephonic interview, and elect an invention that meets the eligibility requirements in section II or III of the notice (i) cited above.

(4) The petition to make special must be timely filed electronically using the USPTO electronic filing system, EFS-Web, and selecting the document description of "Petition for Green Tech Pilot" on the EFS-Web screen. Applicant should use form PTO/SB/420, which is available as a Portable Document Format (PDF) fillable form in EFS-Web and on the USPTO Web site.

(5) The petition to make special must be filed at least one day prior to the date that a first Office action (which may be an Office action containing only a restriction requirement) appears in the Patent Application Information Retrieval (PAIR) system. Applicant may check the status of the application using PAIR.

(6) The petition to make special must be accompanied by a request for early publication in compliance with 37 CFR 1.219 and the publication fee set forth in 37 CFR 1.18(d).

Privacy Act Statement

The **Privacy Act of 1974 (P.L. 93-579)** requires that you be given certain information in connection with your submission of the attached form related to a patent application or patent. Accordingly, pursuant to the requirements of the Act, please be advised that: (1) the general authority for the collection of this information is 35 U.S.C. 2(b)(2); (2) furnishing of the information solicited is voluntary; and (3) the principal purpose for which the information is used by the U.S. Patent and Trademark Office is to process and/or examine your submission related to a patent application or patent. If you do not furnish the requested information, the U.S. Patent and Trademark Office may not be able to process and/or examine your submission, which may result in termination of proceedings or abandonment of the application or expiration of the patent.

The information provided by you in this form will be subject to the following routine uses:

1. The information on this form will be treated confidentially to the extent allowed under the Freedom of Information Act (5 U.S.C. 552) and the Privacy Act (5 U.S.C 552a). Records from this system of records may be disclosed to the Department of Justice to determine whether disclosure of these records is required by the Freedom of Information Act.
2. A record from this system of records may be disclosed, as a routine use, in the course of presenting evidence to a court, magistrate, or administrative tribunal, including disclosures to opposing counsel in the course of settlement negotiations.
3. A record in this system of records may be disclosed, as a routine use, to a Member of Congress submitting a request involving an individual, to whom the record pertains, when the individual has requested assistance from the Member with respect to the subject matter of the record.
4. A record in this system of records may be disclosed, as a routine use, to a contractor of the Agency having need for the information in order to perform a contract. Recipients of information shall be required to comply with the requirements of the Privacy Act of 1974, as amended, pursuant to 5 U.S.C. 552a(m).
5. A record related to an International Application filed under the Patent Cooperation Treaty in this system of records may be disclosed, as a routine use, to the International Bureau of the World Intellectual Property Organization, pursuant to the Patent Cooperation Treaty.
6. A record in this system of records may be disclosed, as a routine use, to another federal agency for purposes of National Security review (35 U.S.C. 181) and for review pursuant to the Atomic Energy Act (42 U.S.C. 218(c)).
7. A record from this system of records may be disclosed, as a routine use, to the Administrator, General Services, or his/her designee, during an inspection of records conducted by GSA as part of that agency's responsibility to recommend improvements in records management practices and programs, under authority of 44 U.S.C. 2904 and 2906. Such disclosure shall be made in accordance with the GSA regulations governing inspection of records for this purpose, and any other relevant (*i.e.*, GSA or Commerce) directive. Such disclosure shall not be used to make determinations about individuals.
8. A record from this system of records may be disclosed, as a routine use, to the public after either publication of the application pursuant to 35 U.S.C. 122(b) or issuance of a patent pursuant to 35 U.S.C. 151. Further, a record may be disclosed, subject to the limitations of 37 CFR 1.14, as a routine use, to the public if the record was filed in an application which became abandoned or in which the proceedings were terminated and which application is referenced by either a published application, an application open to public inspection or an issued patent.
9. A record from this system of records may be disclosed, as a routine use, to a Federal, State, or local law enforcement agency, if the USPTO becomes aware of a violation or potential violation of law or regulation.

UNITED STATES PATENT AND TRADEMARK OFFICE

UNITED STATES DEPARTMENT OF COMMERCE
United States Patent and Trademark Office
Address: COMMISSIONER FOR PATENTS
P.O. Box 1450
Alexandria, Virginia 22313-1450
www.uspto.gov

APPLICATION NO.	FILING DATE	FIRST NAMED INVENTOR	ATTORNEY DOCKET NO.	CONFIRMATION NO.
13/165,696	06/21/2011	Amanda Fischer	11770-US-NP	4356

25907 7590 01/17/2012
NOVOZYMES, INC.
1445 DREW AVE
DAVIS, CA 95618

EXAMINER
PROUTY, REBECCA E

ART UNIT	PAPER NUMBER
1652	

NOTIFICATION DATE	DELIVERY MODE
01/17/2012	ELECTRONIC

Please find below and/or attached an Office communication concerning this application or proceeding.

The time period for reply, if any, is set in the attached communication.

Notice of the Office communication was sent electronically on above-indicated "Notification Date" to the following e-mail address(es):

Patents-US-CA@novozymes.com

UNITED STATES PATENT AND TRADEMARK OFFICE

Commissioner for Patents
United States Patent and Trademark Office
P.O. Box 1450
Alexandria, VA 22313-1450
www.uspto.gov

JAN 17 2012

NOVOZYMES, INC.
1445 DREW AVE
DAVIS CA 95618

In re Application of	:	
FISCHER, Amanda *et al.*	:	DECISION ON PETITION
Application No. 13/165696	:	TO MAKE SPECIAL UNDER
Filed: June 21, 2011	:	THE GREEN TECHNOLOGY
Attorney Docket No. 11770-US-NP	:	PILOT PROGRAM

This is a decision on the petition under 37 CFR 1.102, filed December 22, 2011, to make the above-identified application special under the pilot program for applications pertaining to Green Technologies as set forth in 74 Federal Register Notice 64666 (December 8, 2009) and amended by 75 Federal Register Notice 28554 (May 21, 2010) and 75 Federal Register Notice 69049 (November 10, 2010).

The petition is **GRANTED**.

A grantable petition to make an application special under 37 CFR 1.102 and the pilot program as set forth in 74 FR 64666 must be directed to a nonprovisional application filed under 35 USC 111(a) or be a national stage entry under 35 USC 371, exclusive of any reissue applications.

In order to qualify for special status, the following requirements must be met. 1) The application must have no more than 3 independent claims and no more than 20 total claims. 2) The application must not contain any multiple dependent claims. 3) The petition must state the basis for seeking special status, i.e., the claimed invention either: A) materially enhances the quality of the environment or B) materially contributes to: i) the discovery or development of renewable energy resources, ii) the more efficient utilization and conservation of energy resources, or iii) greenhouse gas emission reduction. 4) If the disclosure is not clear on its face that the claimed invention materially contributes under category (A) or (B), the petition must be accompanied by a statement by the applicant, assignee, or an attorney/agent registered to practice before the Office explaining how the materiality standard is met. 5) A statement that applicant will agree to make an election without traverse in a telephonic interview if a restriction requirement is made by the examiner. 6) The petition to make special must be filed electronically. 7) The petition must be filed at least one day prior to the date that a first Office Action appears in the Patent Application Information Retrieval (PAIR) system. 8) The petition must be accompanied by a request for early publication in compliance with 37 CFR 1.219 and include the publication fee as set forth in 37 CFR 1.18(d).

The requirement for a fee for consideration of the petition to make special for applications pertaining to Green Technologies has been waived.

The instant petition complies with items 1 – 8 above. Accordingly, the above-identified application has been accorded "special" status.

Telephone inquires concerning this decision should be directed to Manjunath Rao at 571-272-0939.

The application is being forwarded to the Technology Center Art Unit 1652 for action on the merits commensurate with this decision.

/Manjunath Rao/

Manjunath Rao
Supervisory Patent Examiner &
POC for TC 1600 Green Tech Petitions
Technology Center 1600

Doc Code: PET.GREEN
Document Description: Petition for Green Tech Pilot

PTO/SB/420 (03-11)

PETITION TO MAKE SPECIAL UNDER THE GREEN TECHNOLOGY PILOT PROGRAM

Attorney Docket Number: 11772-US-NP	Application Number (if known): 13/165,719	Filing date: June 21, 2011

First Named Inventor: Sheryl Luttringer

Title: Methods for C4 Dicarboxylic Acid Production in Filamentous Fungi

APPLICANT HEREBY REQUESTS TO PARTICIPATE IN THE GREEN TECHNOLOGY PILOT PROGRAM FOR THE ABOVE-IDENTIFIED APPLICATION. See Instruction Sheet on page 2.

This petition must be timely filed electronically using the USPTO electronic filing system, EFS-Web.

1. By filing this petition:

   Applicant is requesting early publication: Applicant hereby requests early publication under 37 CFR 1.219 and the publication fee set forth in 37 CFR 1.18(d) accompanies this request.

2. By filing this petition: applicant is agreeing to make an election without traverse in a telephonic interview and elect an invention that meets the eligibility requirements for the Green Technology Pilot Program, if the Office determines that the claims are not obviously directed to a single invention. See Instruction Sheet.

3. This request is accompanied by statements of special status for the eligibility requirement.

4. The application contains no more than three (3) independent claims and twenty (20) total claims.

5. The application does not contain any multiple dependent claims.

6. Other attachments: _____

Signature /Eric J. Fechter/	Date 12-22-2011
Name (Print/Typed) Eric J. Fechter	Registration Number 60,588

***Note**: Signatures of all the inventors or assignees of record of the entire interest or their representative(s) are required in accordance with 37 CFR 1.33 and 11.18. Please see 37 CFR 1.4(d) for the form of the signature. If necessary, submit multiple forms for more than one signature, see below*.*

☐ *Total of _____ forms are submitted.

If you need assistance in completing the form, call 1-800-PTO-9199 and select option 2.

Instruction Sheet for
Petition to Make Special Under the Green Technology Pilot Program

(Not to be Submitted to the USPTO)

The following is a summary of the requirements (for more information see the notices (i) "Pilot Program for Green Technologies Including Greenhouse Gas Reduction," (ii) "Elimination of Classification Requirement in the Green Technology Pilot Program," and (iii) "Expansion and Extension of the Green Technology Pilot Program," available on the USPTO web site at http://www.uspto.gov/patents/init_events/green_tech.jsp):

(1) The application must be a non-reissue, non-provisional utility application filed under 35 U.S.C. 111(a), or an international application that has entered the national stage in compliance with 35 U.S.C. 371, irrespective of the filing date of the application. Reexamination proceedings are excluded from this pilot program.

(2) The application must contain three or fewer independent claims and twenty or fewer total claims. The application must not contain any multiple dependent claims. For an application that contains more than three independent claims or twenty total claims, or multiple dependent claims, applicant must file a preliminary amendment in compliance with 37 CFR 1.121 to cancel the excess claims and/or the multiple dependent claims at the time the petition to make special is filed.

(3) The claims must be directed to a single invention that materially enhances the quality of the environment, or that materially contributes to: (1) the discovery or development of renewable energy resources; (2) the more efficient utilization and conservation of energy resources; or (3) green house gas emission reduction (see the eligibility requirements of sections II and III of the notice (i) cited above). The petition must include a statement that, if the USPTO determines that the claims are directed to multiple inventions (e.g., in a restriction requirement), applicant will agree to make an election without traverse in a telephonic interview, and elect an invention that meets the eligibility requirements in section II or III of the notice (i) cited above.

(4) The petition to make special must be timely filed electronically using the USPTO electronic filing system, EFS-Web, and selecting the document description of "Petition for Green Tech Pilot" on the EFS-Web screen. Applicant should use form PTO/SB/420, which is available as a Portable Document Format (PDF) fillable form in EFS-Web and on the USPTO Web site.

(5) The petition to make special must be filed at least one day prior to the date that a first Office action (which may be an Office action containing only a restriction requirement) appears in the Patent Application Information Retrieval (PAIR) system. Applicant may check the status of the application using PAIR.

(6) The petition to make special must be accompanied by a request for early publication in compliance with 37 CFR 1.219 and the publication fee set forth in 37 CFR 1.18(d).

Privacy Act Statement

The **Privacy Act of 1974 (P.L. 93-579)** requires that you be given certain information in connection with your submission of the attached form related to a patent application or patent. Accordingly, pursuant to the requirements of the Act, please be advised that: (1) the general authority for the collection of this information is 35 U.S.C. 2(b)(2); (2) furnishing of the information solicited is voluntary; and (3) the principal purpose for which the information is used by the U.S. Patent and Trademark Office is to process and/or examine your submission related to a patent application or patent. If you do not furnish the requested information, the U.S. Patent and Trademark Office may not be able to process and/or examine your submission, which may result in termination of proceedings or abandonment of the application or expiration of the patent.

The information provided by you in this form will be subject to the following routine uses:

1. The information on this form will be treated confidentially to the extent allowed under the Freedom of Information Act (5 U.S.C. 552) and the Privacy Act (5 U.S.C 552a). Records from this system of records may be disclosed to the Department of Justice to determine whether disclosure of these records is required by the Freedom of Information Act.
2. A record from this system of records may be disclosed, as a routine use, in the course of presenting evidence to a court, magistrate, or administrative tribunal, including disclosures to opposing counsel in the course of settlement negotiations.
3. A record in this system of records may be disclosed, as a routine use, to a Member of Congress submitting a request involving an individual, to whom the record pertains, when the individual has requested assistance from the Member with respect to the subject matter of the record.
4. A record in this system of records may be disclosed, as a routine use, to a contractor of the Agency having need for the information in order to perform a contract. Recipients of information shall be required to comply with the requirements of the Privacy Act of 1974, as amended, pursuant to 5 U.S.C. 552a(m).
5. A record related to an International Application filed under the Patent Cooperation Treaty in this system of records may be disclosed, as a routine use, to the International Bureau of the World Intellectual Property Organization, pursuant to the Patent Cooperation Treaty.
6. A record in this system of records may be disclosed, as a routine use, to another federal agency for purposes of National Security review (35 U.S.C. 181) and for review pursuant to the Atomic Energy Act (42 U.S.C. 218(c)).
7. A record from this system of records may be disclosed, as a routine use, to the Administrator, General Services, or his/her designee, during an inspection of records conducted by GSA as part of that agency's responsibility to recommend improvements in records management practices and programs, under authority of 44 U.S.C. 2904 and 2906. Such disclosure shall be made in accordance with the GSA regulations governing inspection of records for this purpose, and any other relevant (*i.e.*, GSA or Commerce) directive. Such disclosure shall not be used to make determinations about individuals.
8. A record from this system of records may be disclosed, as a routine use, to the public after either publication of the application pursuant to 35 U.S.C. 122(b) or issuance of a patent pursuant to 35 U.S.C. 151. Further, a record may be disclosed, subject to the limitations of 37 CFR 1.14, as a routine use, to the public if the record was filed in an application which became abandoned or in which the proceedings were terminated and which application is referenced by either a published application, an application open to public inspection or an issued patent.
9. A record from this system of records may be disclosed, as a routine use, to a Federal, State, or local law enforcement agency, if the USPTO becomes aware of a violation or potential violation of law or regulation.

UNITED STATES PATENT AND TRADEMARK OFFICE

UNITED STATES DEPARTMENT OF COMMERCE
United States Patent and Trademark Office
Address: COMMISSIONER FOR PATENTS
P.O. Box 1450
Alexandria, Virginia 22313-1450
www.uspto.gov

APPLICATION NO.	FILING DATE	FIRST NAMED INVENTOR	ATTORNEY DOCKET NO.	CONFIRMATION NO.
13/165,719	06/21/2011	SHERYL LUTTRINGER	11772-US-NP	4394

25907 7590 01/17/2012
NOVOZYMES, INC.
1445 DREW AVE
DAVIS, CA 95618

EXAMINER
PROUTY, REBECCA E

ART UNIT	PAPER NUMBER
1652	

NOTIFICATION DATE	DELIVERY MODE
01/17/2012	ELECTRONIC

Please find below and/or attached an Office communication concerning this application or proceeding.

The time period for reply, if any, is set in the attached communication.

Notice of the Office communication was sent electronically on above-indicated "Notification Date" to the following e-mail address(es):

Patents-US-CA@novozymes.com

UNITED STATES PATENT AND TRADEMARK OFFICE

Commissioner for Patents
United States Patent and Trademark Office
P.O. Box 1450
Alexandria, VA 22313-1450
www.uspto.gov

JAN 17 2012

NOVOZYMES, INC.
1445 DREW AVE
DAVIS CA 95618

In re Application of	:	
LUTTRINGER, Sheryl *et al.*	:	DECISION ON PETITION
Application No. 13/165719	:	TO MAKE SPECIAL UNDER
Filed: June 21, 2011	:	THE GREEN TECHNOLOGY
Attorney Docket No. 11772-US-NP	:	PILOT PROGRAM

This is a decision on the petition under 37 CFR 1.102, filed December 22, 2011, to make the above-identified application special under the pilot program for applications pertaining to Green Technologies as set forth in 74 Federal Register Notice 64666 (December 8, 2009) and amended by 75 Federal Register Notice 28554 (May 21, 2010) and 75 Federal Register Notice 69049 (November 10, 2010).

The petition is **GRANTED**.

A grantable petition to make an application special under 37 CFR 1.102 and the pilot program as set forth in 74 FR 64666 must be directed to a nonprovisional application filed under 35 USC 111(a) or be a national stage entry under 35 USC 371, exclusive of any reissue applications.

In order to qualify for special status, the following requirements must be met. 1) The application must have no more than 3 independent claims and no more than 20 total claims. 2) The application must not contain any multiple dependent claims. 3) The petition must state the basis for seeking special status, i.e., the claimed invention either: A) materially enhances the quality of the environment or B) materially contributes to: i) the discovery or development of renewable energy resources, ii) the more efficient utilization and conservation of energy resources, or iii) greenhouse gas emission reduction. 4) If the disclosure is not clear on its face that the claimed invention materially contributes under category (A) or (B), the petition must be accompanied by a statement by the applicant, assignee, or an attorney/agent registered to practice before the Office explaining how the materiality standard is met. 5) A statement that applicant will agree to make an election without traverse in a telephonic interview if a restriction requirement is made by the examiner. 6) The petition to make special must be filed electronically. 7) The petition must be filed at least one day prior to the date that a first Office Action appears in the Patent Application Information Retrieval (PAIR) system. 8) The petition must be accompanied by a request for early publication in compliance with 37 CFR 1.219 and include the publication fee as set forth in 37 CFR 1.18(d).

The requirement for a fee for consideration of the petition to make special for applications pertaining to Green Technologies has been waived.

The instant petition complies with items 1 – 8 above. Accordingly, the above-identified application has been accorded "special" status.

Telephone inquires concerning this decision should be directed to Manjunath Rao at 571-272-0939.

The application is being forwarded to the Technology Center Art Unit for action on the merits commensurate with this decision.

/Manjunath Rao/

Manjunath Rao
Supervisory Patent Examiner &
POC for TC 1600 Green Tech Petitions
Technology Center 1600

UNITED STATES PATENT AND TRADEMARK OFFICE

Commissioner for Patents
United States Patent and Trademark Office
P.O. Box 1450
Alexandria, VA 22313-1450
www.uspto.gov

PHARMACIA & UPJOHN
7000 Portage Road
KZO-300-104
KALAMAZOO MI 49001

MAILED

SEP 27 2011

OFFICE OF PETITIONS

In re Application of
HUANG et al.
Application No. 13/165,877
Filed: June 22, 2011
Attorney Docket No. PC33031B

DECISION ON PETITION

This is in response to the petition under 37 CFR 1.57(a), filed July 22, 2011, which is being treated as a petition under 37 CFR 1.53(e)(2)[1] requesting that the above-referenced application be accorded a filing date of June 22, 2011.

The application papers in the above-identified application were deposited on June 22, 2011. On July 8, 2011, the Office of Patent Application Processing mailed applicants a Notice of Incomplete Nonprovisional Application notifying applicants that the application papers had not been accorded a filing date because the application was deposited without drawings.

On July 22, 2011, applicants filed the present petition. Applicants request entry of the inadvertently omitted drawings on the basis that the application as filed contains a claim under 37 CFR 1.78 for the benefit of a prior-filed nonprovisional application and that the inadvertently omitted drawings are contained in that prior-filed application. Applicants provided a copy of the omitted drawings with the present petition.

A review of the application confirms that, as filed, the application contained at least one method claim. MPEP § 601.01(f) provides that:

> It has been USPTO practice to treat an application that contains at least one process or method claim as an application for which a drawing is not necessary for an understanding of the invention under 35 U.S.C. 113 (first sentence).

[1] Any request for review of a notification pursuant to 37 CFR 1.53(e)(1), or a notification that the original application papers lack a portion of the specification or drawing(s), must be by way of a petition pursuant to § 1.53(e) accompanied by the fee set forth in § 1.17(f). In the absence of a timely (§ 1.181(f)) petition, the filing date of an application in which the applicants were notified of a filing error pursuant to § 1.53(e)(1) will be the date the filing error is corrected.

Thus, pursuant to § 601.01(f), a drawing is not considered essential for a filing date. The instant application is entitled to a filing date without drawings present in the application. Accordingly, the Office should have granted the application a filing date and mailed a Notice of Omitted Items instead of a Notice of Incomplete Nonprovisional Application. As stated in MPEP § 601.01(g) under the section entitled, "Application Entitled to a Filing Date," applicants may submit an amendment to include the inadvertently omitted portion of the drawing(s) pursuant to 37 CFR 1.57(a):

> [i]f an application was filed on or after September 21, 2004, and contains a claim under 37 CFR 1.55 for priority of a prior-filed foreign application, or a claim under 37 CFR 1.78 for the benefit of a prior-filed provisional, nonprovisional, or international application that was present on the filing date of the application, and the omitted portion of the drawing(s) was inadvertently omitted from the application and is completely contained in the prior-filed application[.]

Any amendment requesting entry of the inadvertently omitted drawings must comply with 37 CFR 1.57(a) and 37 CFR 1.121 and will be considered by the examiner. See MPEP § 201.17.

The petition is **GRANTED** to the extent the instant application will be accorded a filing date of June 22, 2011, with no drawings as part of the original disclosure.

Given the basis for granting this petition, the $400.00 petition fee is being refunded.

Pursuant to this decision, the application will be referred to Office of Patent Application Processing for:

- **correction of the filing date to June 22, 2011;**
- **for indication in Office records, as appropriate, that "0" sheets of drawings were present on filing, and;**
- **for issuance of a filing receipt.**

Applicants may request entry of the omitted figures by filing an amendment with the examiner prior to the first Office action on the merits. The determination of new matter will be made by the examiner.

The Office notes that the present petition contains a request for a three-month extension of time for response intended for Application No. 11/995,779, including an authorization to charge applicants' Deposit Account for the extension of time fee, as well as refund the two month extension of time fee paid in that application. As provided in 37 CFR 1.4(c), matters that are to be considered by different branches or sections of the USPTO must be contained in separate papers. Moreover, since each file must be complete in itself, a separate copy of every paper to be filed in a patent, patent file, or other proceeding must be furnished for each file to which the paper pertains, even though the contents of the papers filed in two or more files may be identical.

37 CFR 1.4(b). Therefore, the request for a three month extension of time for response and refund of the two month extension of time fee ("Request") submitted in this Application, No. 13/165,877, should have been submitted as a separate paper in Application No. 11/955,779, the application for which it pertains, as required by 37 CFR 1.4(b)-(c). The Request has not been entered. Applicants must file this Request in the appropriate Application, No. 11/955,779.

Telephone inquiries concerning this matter may be directed to Christina Tartera Donnell, Senior Petitions Attorney at (571) 272-3211.

Christopher Bottorff
Petitions Examiner
Office of Petitions

UNITED STATES PATENT AND TRADEMARK OFFICE

UNITED STATES DEPARTMENT OF COMMERCE
United States Patent and Trademark Office
Address: COMMISSIONER FOR PATENTS
P.O. Box 1450
Alexandria, Virginia 22313-1450
www.uspto.gov

APPLICATION NO.	FILING DATE	FIRST NAMED INVENTOR	ATTORNEY DOCKET NO.	CONFIRMATION NO.
13/165,887	06/22/2011	Kevin R. Imes	39285-00051	4749

59582 7590 07/29/2011
DICKINSON WRIGHT PLLC
2600 WEST BIG BEAVER ROAD
SUITE 300
TROY, MI 48084-3312

EXAMINER

ART UNIT	PAPER NUMBER
2172	

MAIL DATE	DELIVERY MODE
07/29/2011	PAPER

Please find below and/or attached an Office communication concerning this application or proceeding.

The time period for reply, if any, is set in the attached communication.

UNITED STATES PATENT AND TRADEMARK OFFICE

Commissioner for Patents
United States Patent and Trademark Office
P.O. Box 1450
Alexandria, VA 22313-1450
www.uspto.gov

DICKINSON WRIGHT PLLC
2600 WEST BIG BEAVER ROAD
SUITE 300
TROY MI 48084-3312

In re Application of IMES, Kevin et al. Appl. No.: 13/165,887 Filed: June 22, 2011 For: **MOBILE ENERGY MANAGEMENT SYSTEM**	**DECISION ON PETITION TO MAKE SPECIAL FOR NEW APPLICATION UNDER 37 C.F.R. § 1.102 & M.P.E.P. § 708.02**

This is a decision on the petition filed on June 22, 2011 to make the above-identified application special for accelerated examination procedure under 37 C.F.R. § 1.102(d).

The petition to make the application special is **GRANTED**.

The application is eligible for accelerated examination and the petition complies with the conditions for granting the application special status pursuant to the "Change to Practice for Petitions in Patent Applications to Make Special and for Accelerated Examination" issued June 26, 2006, in the Federal Register. (71 Fed. Reg. 36323).

The prosecution of the instant application will be conducted expeditiously according to the following guidelines.

1. The application will be docketed to an examiner and taken up for action within two weeks of the date of this decision.

2. Restriction Practice:
   If the examiner determines that the claims are not directed to a single invention, a telephone request to elect one single invention will be made pursuant to MPEP 812.01. As a prerequisite to the grant of this petition, the applicant has agreed to make an oral election, by telephone, without traverse. If the applicant refuses to make an election without traverse, or the examiner cannot reach the applicant after a reasonable effort, the

examiner will treat the first claimed invention (invention defined by claim 1) as having being constructively elected without traverse for examination.

3. Office action:
If it is determined that, after appropriate consultation, there is a potential rejection or any other issue to be addressed, the examiner will telephone the applicant and arrange an interview to discuss and resolve the issue. An Office action, other than a Notice of Allowance and Fee(s) Due (Notice of Allowance), will not be issued unless either: 1) an interview was conducted but did not result in agreed to action that places the application in condition for allowance, or, 2) a determination is made that an interview would be unlikely to result in the application being placed in condition for allowance, and 3) an internal conference has been held to review any rejection of any claim.

4. Time for Reply:
An Office action other than a Notice of Allowance or a final Office action will set a shortened statutory period of one month or thirty days, whichever is longer, for reply with no extension of time available under 37 CFR 1.136(a). Failure to timely file a reply within this non-extendible period for reply will result in the abandonment of the application.

5. Reply by Applicant:
A timely reply to an Office action other than the Notice of Allowance must be submitted electronically via EFS or EFS-web and limited to addressing the rejections, objections and requirement made. Any amendment that attempts to: 1) add claims which would result in more than three pending independent claims or more than twenty pending total claims; 2) present claims not encompassed by the pre-examination search or an updated accelerated examination support document; or 3) present claims that are directed a non-elected invention or an invention other than that previously claimed and examined in the application, will be treated as not fully responsive and will not be entered.

   For any amendment to the claims (including any new claim) that is not encompassed by the accelerated examination support document, applicant must provide an updated accelerated examination support document that encompasses the amended or new claims at the time of filing of the amendment.

   To proceed expeditiously with the examination, it is recommended that a reply with amendments made to any claim or with any new claim being added be accompanied by an updated accelerated examination support document or a statement explaining how the amended or new claim is supported by the original accelerated examination support document.

6. Information Disclosure Statement (IDS):

Any IDS filed during prosecution must be submitted electronically via EFS or EFS-web, accompanied by an updated accelerated examination support document, and be in compliance with 37 CFR 1.97 and 1.98.

7. Post-Allowance Processing:
   To expedite processing of the allowed application into a patent, the applicant must: 1) pay the required fees within one month of the date of the Notice of Allowance, and 2) not file any post allowance papers not required by the Office. In no event may the issue fee be paid and accepted later than three months from the date of the Notice of Allowance.

8. After-Final and Appeal Procedures:
   To expedite prosecution, after receiving the final Office action, applicant must: 1) promptly file a notice of appeal, an appeal brief and appeal fees; and 2) not request a pre-appeal brief conference.

   Any amendment, affidavit or other evidence filed after final Office action must comply with applicable rules and the requirements outlined in numbered paragraphs 5 and 6 above.

   On appeal, the application will proceed according to normal appeal procedures. After appeal, the application will again be treated special.

9. Proceedings Outside the Normal Examination Process:
   If the application becomes involved in a proceeding that is outside the normal examination process (e.g., a secrecy order, national security review, interference proceeding, petitions under 37 CFR 1.181, 182 or 183), the application will be treated special before and after such proceeding.

10. Final Disposition:
    The twelve month goal of this accelerated examination procedure ends with a final disposition. The mailing of a final Office action, a Notice of Allowance, the filing of a Notice of Appeal, or the filing of a Request for Continued Examination (RCE) is the final disposition.

If, during prosecution, a paper is not filed electronically using EFS-web, a reply is filed but is not fully responsive, the application is involved in an appeal, or a proceeding outside normal examination process, the application will still be examined expeditiously, however, the final disposition may occur more than twelve months from the filing of the application.

Any inquiry regarding this decision should be directed to Eddie C. Lee at (571) 272-1732.

/Eddie C. Lee/

Eddie C. Lee
Quality Assurance Specialist
Technology Center 2100

UNITED STATES PATENT AND TRADEMARK OFFICE

Commissioner for Patents
United States Patent and Trademark Office
P.O. Box 1450
Alexandria, VA 22313-1450
www.uspto.gov

SENDAK & STAMPER
209 SOUTH MAIN STREET
CROWN POINT IN 46307

MAILED

AUG 15 2011

OFFICE OF PETITIONS

In re Application of	:	
Jake Emmert	:	
Application No. 13/166,042	:	NOTICE
Filed: June 22, 2011	:	
Attorney Docket No. 6183	:	

This is a notice regarding your request filed July 25, 2011, for acceptance of a fee deficiency submission under 37 CFR 1.28.

The Office no longer investigates or rejects original or reissue applications under 37 CFR 1.56. **1098 Off. Gaz. Pat. Office 502 (January 3, 1989)**. Therefore, nothing in this Notice is intended to imply that an investigation was done.

Your fee deficiency submission under 37 CFR 1.28 is hereby **ACCEPTED**.

This application is no longer entitled to small entity status. Accordingly, all future fees paid in this application must be paid at the large entity rate.

Inquiries related to this communication should be directed to the undersigned at (571) 272-4584.

JoAnne Burke
Petitions Examiner
Office of Petitions

UNITED STATES PATENT AND TRADEMARK OFFICE

Commissioner for Patents
United States Patent and Trademark Office
P.O. Box 1450
Alexandria, VA 22313-1450
www.uspto.gov

MOMENTIVE PERFORMANCE MATERIALS INC.
c/o Dilworth & Barrese, LLP
1000 Woodbury Road
Suite 405
Woodbury NY 11797

MAILED
SEP 19 2011
OFFICE OF PETITIONS

In re Application of :
Policello, et al. :
Application No. 13/166,092 : ON PETITION
Deposit date: June 22, 2011 :
Attorney Docket No. 1302-296 DIV I :
For: HYDROLYSIS RESISTANT ORGANOMODIFIED TRISILOXANE SURFACTANTS

This is a decision on the petition filed September 2, 2011 to accord a filing date of June 22, 2011 to the above-identified application. The petition will be treated under 37 CFR 1.53(e).

The application was deposited on June 22, 2011. However, on July 7, 2011, the Office of Patent Application Processing mailed a "Notice of Incomplete Nonprovisional Application" requiring drawings of applicants' invention and stating that the filing date would be the date of receipt of the omitted drawing(s). Applicants timely filed the present petition, arguing drawings are not necessary for the understanding of the invention.

As stated in MPEP 601.01(f), it is the practice of the United States Patent and Trademark Office (PTO) to treat an application that contains at least one process or method claim as an application for which a drawing is not necessary for an understanding of the invention under 35 U.S.C. 113 The same practice has been followed in composition applications.

MPEP 601.01(f) also states that:

> ... A nonprovisional application having at least one claim, or a provisional application having at least some disclosure, directed to the subject matter discussed above for which a drawing is usually not considered essential for a filing date, not describing drawing figures in the specification, and filed without drawings will simply be processed, so long as the application contains something that can be construed as a written description.

This nonprovisional application contains composition claims. Therefore, the application should have been accorded a filing date without drawings.

In view of the above, the "Notice" mailed July 7, 2011 was mailed in error and is hereby withdrawn. The application is entitled to a filing date of June 22, 2011. The petition is **granted**.

Pursuant to petitioners' request, the $400.00 petition fee will be refunded to petitioners' deposit account.

The application is being returned to the Office of Patent Application Processing for further processing with a filing date of **June 22, 2011** and the mailing of a filing receipt reflecting the June 22, 2011 filing date.

Telephone inquiries specific to this matter should be directed to the undersigned at (571) 272-3230.

Shirene Willis Brantley

Shirene Willis Brantley
Senior Petitions Attorney
Office of Petitions

Doc Code: PET.GREEN
Document Description: Petition for Green Tech Pilot

PTO/SB/420 (05-10)
Approved for use through 01/31/2011. OMB 0651-0062
U.S. Patent and Trademark Office; U. S. DEPARTMENT OF COMMERCE
Under the Paperwork Reduction Act of 1995, no persons are required to respond to a collection of information unless it displays a valid OMB control number.

PETITION TO MAKE SPECIAL UNDER THE GREEN TECHNOLOGY PILOT PROGRAM

Attorney Docket Number: NDTCO.210A	Application Number (if known): 13/166,246	Filing date: June 22, 2011

First Named Inventor: Shijun Zheng

Title: POLYPHENYLENE HOST COMPOUNDS

APPLICANT HEREBY REQUESTS TO PARTICIPATE IN THE GREEN TECHNOLOGY PILOT PROGRAM FOR THE ABOVE-IDENTIFIED APPLICATION. See Instruction Sheet on page 2.

This petition must be timely filed electronically using the USPTO electronic filing system, EFS-Web.

1. By filing this petition:

   Applicant is requesting early publication: Applicant hereby requests early publication under 37 CFR 1.219 and the publication fee set forth in 37 CFR 1.18(d) accompanies this request.

2. By filing this petition: applicant is agreeing to make an election without traverse in a telephonic interview and elect an invention that meets the eligibility requirements set forth in the notice titled "Pilot Program for Green Technologies Including Greenhouse Gas Reduction," as modified by the notice titled "Elimination of Classification Requirement in the Green Technology Pilot Program," each of which was published in the Federal Register, if the Office determines that the claims are not obviously directed to a single invention.

3. This request is accompanied by statements of special status for the eligibility requirement.

4. The application contains no more than three (3) independent claims and twenty (20) total claims.

5. The application does not contain any multiple dependent claims.

6. Other attachments: _____

Signature	Date June 24, 2011
Name (Print/Typed) Jeremy R. Pierce	Registration Number 59,034

Note: *Signatures of all the inventors or assignees of record of the entire interest or their representative(s) are required in accordance with 37 CFR 1.33 and 11.18. Please see 37 CFR 1.4(d) for the form of the signature. If necessary, submit multiple forms for more than one signature, see below*.*

☑ *Total of 1 forms are submitted.

The information is required to obtain or retain a benefit by the public which is to file (and by the USPTO to process) an application. Confidentiality is governed by 35 U.S.C. 122 and 37 CFR 1.11 and 1.14. This collection is estimated to take 1 hour to complete, including gathering, preparing, and submitting the completed application form to the USPTO. Time will vary depending upon the individual case. Any comments on the amount of time you require to complete this form and/or suggestions for reducing this burden, should be sent to the Chief Information Officer, U.S. Patent and Trademark Office, U.S. Department of Commerce, P.O. Box 1450, Alexandria, VA 22313-1450. DO NOT SEND FEES OR COMPLETED FORMS TO THIS ADDRESS. **SEND TO: Commissioner for Patents, P.O. Box 1450, Alexandria, VA 22313-1450.**

If you need assistance in completing the form, call 1-800-PTO-9199 and select option 2.

UNITED STATES PATENT AND TRADEMARK OFFICE

UNITED STATES DEPARTMENT OF COMMERCE
United States Patent and Trademark Office
Address: COMMISSIONER FOR PATENTS
P.O. Box 1450
Alexandria, Virginia 22313-1450
www.uspto.gov

APPLICATION NO.	FILING DATE	FIRST NAMED INVENTOR	ATTORNEY DOCKET NO.	CONFIRMATION NO.
13/166,246	06/22/2011	Shijun Zheng	NDTCO.210A	5493

20995 7590 07/27/2011
KNOBBE MARTENS OLSON & BEAR LLP
2040 MAIN STREET
FOURTEENTH FLOOR
IRVINE, CA 92614

EXAMINER

ART UNIT	PAPER NUMBER
1626	

NOTIFICATION DATE	DELIVERY MODE
07/27/2011	ELECTRONIC

Please find below and/or attached an Office communication concerning this application or proceeding.

The time period for reply, if any, is set in the attached communication.

Notice of the Office communication was sent electronically on above-indicated "Notification Date" to the following e-mail address(es):

jcartee@kmob.com
efiling@kmob.com
eOAPilot@kmob.com

UNITED STATES PATENT AND TRADEMARK OFFICE

JUL 2 7 2011

Commissioner for Patents
United States Patent and Trademark Office
P.O. Box 1450
Alexandria, VA 22313-1450
www.uspto.gov

KNOBBE MARTENS OLSON & BEAR LLP
2040 MAIN STREET
FOURTEENTH FLOOR
IRVINE CA 92614

In re Application of	:	
ZHENG, Shijun *et al.*	:	DECISION ON PETITION
Application No. 13/166246	:	TO MAKE SPECIAL UNDER
Filed: June 22, 2011	:	THE GREEN TECHNOLOGY
Attorney Docket No. NDTCO.210A	:	PILOT PROGRAM

This is a decision on the petition under 37 CFR 1.102, filed June 24, 2011, to make the above-identified application special under the pilot program for applications pertaining to Green Technologies as set forth in 74 Federal Register Notice 64666 (December 8, 2009) and amended by 75 Federal Register Notice 28554 (May 21, 2010) and 75 Federal Register Notice 69049 (November 10, 2010).

The petition is **GRANTED**.

A grantable petition to make an application special under 37 CFR 1.102 and the pilot program as set forth in 74 FR 64666 must be directed to a nonprovisional application filed under 35 USC 111(a) or be a national stage entry under 35 USC 371, exclusive of any reissue applications.

In order to qualify for special status, the following requirements must be met. 1) The application must have no more than 3 independent claims and no more than 20 total claims. 2) The application must not contain any multiple dependent claims. 3) The petition must state the basis for seeking special status, i.e., the claimed invention either: A) materially enhances the quality of the environment or B) materially contributes to: i) the discovery or development of renewable energy resources, ii) the more efficient utilization and conservation of energy resources, or iii) greenhouse gas emission reduction. 4) If the disclosure is not clear on its face that the claimed invention materially contributes under category (A) or (B), the petition must be accompanied by a statement by the applicant, assignee, or an attorney/agent registered to practice before the Office explaining how the materiality standard is met. 5) A statement that applicant will agree to make an election without traverse in a telephonic interview if a restriction requirement is made by the examiner. 6) The petition to make special must be filed electronically. 7) The petition must be filed at least one day prior to the date that a first Office Action appears in the Patent Application Information Retrieval (PAIR) system. 8) The petition must be accompanied by a request for early publication in compliance with 37 CFR 1.219 and include the publication fee as set forth in 37 CFR 1.18(d).

The requirement for a fee for consideration of the petition to make special for applications pertaining to Green Technologies has been waived.

The instant petition complies with items 1 – 8 above. Accordingly, the above-identified application has been accorded "special" status.

Telephone inquires concerning this decision should be directed to Manjunath Rao at 571-272-0939.

The application is being forwarded to the Technology Center Art Unit 1629 for action on the merits commensurate with this decision.

/Manjunath Rao/

Manjunath Rao
Supervisory Patent Examiner &
POC for TC 1600 Green Tech Petitions
Technology Center 1600

UNITED STATES PATENT AND TRADEMARK OFFICE

UNITED STATES DEPARTMENT OF COMMERCE
United States Patent and Trademark Office
Address: COMMISSIONER FOR PATENTS
P.O. Box 1450
Alexandria, Virginia 22313-1450
www.uspto.gov

APPLICATION NO.	FILING DATE	FIRST NAMED INVENTOR	ATTORNEY DOCKET NO.	CONFIRMATION NO.
13/166,262	06/22/2011	Qi Zhang	SUTOSH.858AUS	5524

7590 02/21/2012
KNOBBE MARTENS OLSON & BEAR LLP
2040 MAIN STREET
FOURTEENTH FLOOR
IRVINE, CA 92614

EXAMINER
VU, KIEU D

ART UNIT	PAPER NUMBER
2173	

NOTIFICATION DATE	DELIVERY MODE
02/21/2012	ELECTRONIC

DECISION GRANTING PETITION UNDER 37 CFR 1.138(d)

The declaration of express abandonment is recognized

This is in response to the petition under 37 CFR 1.138(d), requesting for a refund of any previously paid search fee and excess claims fee in the above-identified application.

The petition is granted.

The express abandonment is recognized. Any previously paid search fee and excess claims fee are hereby refunded.

Telephone inquiries should be directed to the Office of Data Management at (571) 272-4200.

Mimi Farmer

Patent Publication Branch
Office of Data Management

FORM PET651G (Rev. 08/07)

Doc Code: PET.GREEN
Document Description: Petition for Green Tech Pilot

O P A
JUL 0 5 2011
PATENT & TRADEMARK OFFICE

IFW

PTO/SB/420 (03-11)

PETITION TO MAKE SPECIAL UNDER THE GREEN TECHNOLOGY PILOT PROGRAM

Attorney Docket Number: 500757004	Application Number (if known): 13166347	Filing date: June 22, 2011

First Named Inventor: Sam Mihailoff

Title: System for Steam Production for Electric Power Generation

APPLICANT HEREBY REQUESTS TO PARTICIPATE IN THE GREEN TECHNOLOGY PILOT PROGRAM FOR THE ABOVE-IDENTIFIED APPLICATION. See Instruction Sheet on page 2.

This petition must be timely filed electronically using the USPTO electronic filing system, EFS-Web.

1. By filing this petition:

   Applicant is requesting early publication: Applicant hereby requests early publication under 37 CFR 1.219 and the publication fee set forth in 37 CFR 1.18(d) accompanies this request.

2. By filing this petition: applicant is agreeing to make an election without traverse in a telephonic interview and elect an invention that meets the eligibility requirements for the Green Technology Pilot Program, if the Office determines that the claims are not obviously directed to a single invention. See Instruction Sheet.

3. This request is accompanied by statements of special status for the eligibility requirement.

4. The application contains no more than three (3) independent claims and twenty (20) total claims.

5. The application does not contain any multiple dependent claims.

6. Other attachments: Statement in Support of Accelerated Examination under Green Technology Pilot Program

Signature Sam Mihailoff	Date June 30, 2011
Name (Print/Typed) Sam Mihailoff	Registration Number

Note: *Signatures of all the inventors or assignees of record of the entire interest or their representative(s) are required in accordance with 37 CFR 1.33 and 11.18. Please see 37 CFR 1.4(d) for the form of the signature. If necessary, submit multiple forms for more than one signature, see below*.*

☐ *Total of 1 forms are submitted.

If you need assistance in completing the form, call 1-800-PTO-9199 and select option 2.

07/06/2011 HVUONG1 00000012 13166347

01 FC:1504 300.00 OP

OIPE IAP23
JUL 0 5 2011
PATENT & TRADEMARK OFFICE

Applicant: Sam Mihailoff
2922 117th St. Toledo, OH 43611
419-726-9649
sssam@att.net

Attorney Docket No.: 500757004

Serial No.: 13166347

For: **System for Steam Production for Electric Power Generation**

Filed: June 22, 2011. (Patent App 6/22/11 & Drawing Followed 6/23/11)

Statement in Support of Accelerated Examination under Green Technology Pilot Program

Commissioner for Patents
P.O. Box 1450
Alexandria, VA 22313-1450

June 30, 2011

To Whom It May Concern:

This written statement is submitted in support of the above-listed application receiving expedited examination under the USPTO's Green Technology Pilot Program. The application claims technology that improves environmental quality; increases energy conservation; assists in the development of renewable energy resources; reduces greenhouse gas emissions **It does so by eliminating fossil fuels etc. and the pollution caused, from traditional steam powered electric power generation plants.** My form Petition to Make Special under the Pilot Program is attached hereto.

Respectfully Submitted,

Sam Mihailoff

Sam Mihailoff age 74 yrs. Inventor

UNITED STATES PATENT AND TRADEMARK OFFICE

UNITED STATES DEPARTMENT OF COMMERCE
United States Patent and Trademark Office
Address: COMMISSIONER FOR PATENTS
P.O. Box 1450
Alexandria, Virginia 22313-1450
www.uspto.gov

APPLICATION NO.	FILING DATE	FIRST NAMED INVENTOR	ATTORNEY DOCKET NO.	CONFIRMATION NO.
13/166,347	06/23/2011	SAM MIHAILOFF	500757004	5699

7590 07/25/2011

SAM MIHAILOFF
2922 117TH ST
TOLEDO, OH 43611

EXAMINER

ART UNIT	PAPER NUMBER
3741	

MAIL DATE	DELIVERY MODE
07/25/2011	PAPER

Please find below and/or attached an Office communication concerning this application or proceeding.

The time period for reply, if any, is set in the attached communication.

UNITED STATES PATENT AND TRADEMARK OFFICE

Commissioner for Patents
United States Patent and Trademark Office
P.O. Box 1450
Alexandria, VA 22313-1450
www.uspto.gov

SAM MIHAILOFF
2922 117TH ST
TOLEDO, OH 43611

In re Application of	:	
MIHAILOFF, SAM	:	DECISION ON PETITION
Application No. 13/166,347	:	TO MAKE SPECIAL UNDER
Filed: June 22, 2011	:	THE GREEN TECHNOLOGY
Attorney Docket No. 500757004	:	PILOT PROGRAM

This is a decision on the petition under 37 CFR 1.102, filed July 5, 2011, to make the above-identified application special under the pilot program for applications pertaining to Green Technologies as set forth in 74 Federal Register Notice 64666 (December 8, 2009) and amended by 75 Federal Register Notice 28554 (May 21, 2010) and 75 Federal Register Notice 69049 (November 10, 2010).

The petition is **granted**.

If reconsideration of this decision is desired, a petition for reconsideration must be filed within ONE (1) MONTH OR THIRTY (30) DAYS from the mail date of this decision, whichever is longer. No extension of this time limit can be granted under 37 CFR 1.136(a) or (b). The petition for reconsideration should include an exhaustive attempt to provide the lacking item(s) noted below, since, after a decision on the petition for reconsideration, no further reconsideration or review of the matter will be undertaken by the Director.

A grantable petition to make an application special under 37 CFR 1.102 and the pilot program as set forth in 74 FR 64666 must be directed to a nonprovisional application filed under 35 USC 111(a) or be a national stage entry under 35 USC 371, exclusive of any reissue applications and be filed prior to the date of the notice, December 8, 2009.

In order to qualify for special status, the following requirements must be met. 1) The application must have no more than 3 independent claims and no more than 20 total claims. 2) The application must not contain any multiple dependent claims. 3) The petition must state the basis for seeking special status, i.e., the claimed invention either: A) materially enhances the quality of the environment or B) materially contributes to: i) the discovery or development of renewable energy resources, ii) the more efficient utilization and conservation of energy resources, or iii) greenhouse gas emission reduction. 4) If the disclosure is not clear on its face that the claimed invention materially contributes under category (A) or (B), the petition must be accompanied by a statement by the applicant, assignee, or an attorney/agent registered to practice before the Office explaining how the materiality standard is met. 5) A statement that applicant will agree to make an election without traverse in a telephonic interview if a restriction requirement is made

by the examiner. 6) The petition to make special must be filed electronically. 7) The petition must be filed at least one day prior to the date that a first Office Action appears in the Patent Application Information Retrieval (PAIR) system. 8) The petition must be accompanied by a request for early publication in compliance with 37 CFR 1.219 and include the publication fee as set forth in 37 CFR 1.18(d).

The requirement for a fee for consideration of the petition to make special for applications pertaining to Green Technologies has been waived.

The instant petition complies with items 1 – 8 above. Accordingly, the above-identified application has been accorded "special" status.

Telephone inquiries concerning this decision should be directed to Henry Yuen at 571-272-4856.

Upon completion of pre-examination processing, the application is being forwarded to the Technology Center Art Unit 3741 for action.

/Henry C. Yuen/

Henry C. Yuen
Quality Assurance Specialist
Technology Center 3700

UNITED STATES PATENT AND TRADEMARK OFFICE

Commissioner for Patents
United States Patent and Trademark Office
P.O. Box 1450
Alexandria, VA 22313-1450
www.uspto.gov

LOCKE LORD BISSELL & LIDDELL LLP
600 TRAVIS SUITE 2800
HOUSTON TX 77002-3095

MAILED
FEB 03 2012
OFFICE OF PETITIONS

In re Application of:
BRADLEY, et al.
Application No.: 13/166,531
Filing Date: June 22, 2011
Attorney Docket No.: 0025377-007US

DECISION ON PETITION
TO MAKE SPECIAL UNDER
37 CFR 1.102(c)(1)

This is a decision on the petition to make special under 37 CFR 1.102(c)(1), filed January 31, 2012, to make the above-identified application special based on applicant's age as set forth in M.P.E.P. § 708.02, Section IV.

The petition is **GRANTED**.

A grantable petition to make an application special under 37 CFR 1.102(c)(1) and MPEP § 708.02, Section IV: Applicant's Age must be accompanied by evidence showing that at least one of the applicants is 65 years of age, or more, such as a birth certificate or a statement by applicant. Applicant may also submit a statement from a registered practitioner that he or she has evidence that the applicant is 65 years of age or older. No fee is required

The instant petition includes a statement from a registered practitioner certifying that he is in possession of evidence that the applicant, Walter Bradley, is 65 years of age or older as required under MPEP § 708.02. Accordingly, the above-identified application has been accorded "special" status.

Telephone inquiries concerning this decision should be directed to Brian W. Brown at (571) 272-5338.

All other inquiries concerning either the examination or status of the application should be directed to the Technology Center.

Brian W. Brown
Petitions Examiner
Office of Petitions

Doc Code: PET.GREEN
Document Description: Petition for Green Tech Pilot

PTO/SB/420 (03-11)

PETITION TO MAKE SPECIAL UNDER THE GREEN TECHNOLOGY PILOT PROGRAM

Attorney Docket Number: SLDMP004AD1	Application Number (if known):	Filing date: June 22, 2011

First Named Inventor: Zhongchun Wang

Title: ELECTROCHROMIC DEVICES

APPLICANT HEREBY REQUESTS TO PARTICIPATE IN THE GREEN TECHNOLOGY PILOT PROGRAM FOR THE ABOVE-IDENTIFIED APPLICATION. See Instruction Sheet on page 2.

This petition must be timely filed electronically using the USPTO electronic filing system, EFS-Web.

1. By filing this petition:

   Applicant is requesting early publication: Applicant hereby requests early publication under 37 CFR 1.219 and the publication fee set forth in 37 CFR 1.18(d) accompanies this request.

2. By filing this petition: applicant is agreeing to make an election without traverse in a telephonic interview and elect an invention that meets the eligibility requirements for the Green Technology Pilot Program, if the Office determines that the claims are not obviously directed to a single invention. See Instruction Sheet.

3. This request is accompanied by statements of special status for the eligibility requirement.

4. The application contains no more than three (3) independent claims and twenty (20) total claims.

5. The application does not contain any multiple dependent claims.

6. Other attachments: _____

Signature /Brian D. Griedel/	Date June 22, 2011
Name (Print/Typed) Brian D. Griedel	Registration Number 48,425

Note: *Signatures of all the inventors or assignees of record of the entire interest or their representative(s) are required in accordance with 37 CFR 1.33 and 11.18. Please see 37 CFR 1.4(d) for the form of the signature. If necessary, submit multiple forms for more than one signature, see below*.*

☐ *Total of _____ forms are submitted.

If you need assistance in completing the form, call 1-800-PTO-9199 and select option 2.

Instruction Sheet for
Petition to Make Special Under the Green Technology Pilot Program

(Not to be Submitted to the USPTO)

The following is a summary of the requirements (for more information see the notices (i) "Pilot Program for Green Technologies Including Greenhouse Gas Reduction," (ii) "Elimination of Classification Requirement in the Green Technology Pilot Program," and (iii) "Expansion and Extension of the Green Technology Pilot Program," available on the USPTO web site at http://www.uspto.gov/patents/init_events/green_tech.jsp):

(1) The application must be a non-reissue, non-provisional utility application filed under 35 U.S.C. 111(a), or an international application that has entered the national stage in compliance with 35 U.S.C. 371, irrespective of the filing date of the application. Reexamination proceedings are excluded from this pilot program.

(2) The application must contain three or fewer independent claims and twenty or fewer total claims. The application must not contain any multiple dependent claims. For an application that contains more than three independent claims or twenty total claims, or multiple dependent claims, applicant must file a preliminary amendment in compliance with 37 CFR 1.121 to cancel the excess claims and/or the multiple dependent claims at the time the petition to make special is filed.

(3) The claims must be directed to a single invention that materially enhances the quality of the environment, or that materially contributes to: (1) the discovery or development of renewable energy resources; (2) the more efficient utilization and conservation of energy resources; or (3) green house gas emission reduction (see the eligibility requirements of sections II and III of the notice (i) cited above). The petition must include a statement that, if the USPTO determines that the claims are directed to multiple inventions (e.g., in a restriction requirement), applicant will agree to make an election without traverse in a telephonic interview, and elect an invention that meets the eligibility requirements in section II or III of the notice (i) cited above.

(4) The petition to make special must be timely filed electronically using the USPTO electronic filing system, EFS-Web, and selecting the document description of "Petition for Green Tech Pilot" on the EFS-Web screen. Applicant should use form PTO/SB/420, which is available as a Portable Document Format (PDF) fillable form in EFS-Web and on the USPTO Web site.

(5) The petition to make special must be filed at least one day prior to the date that a first Office action (which may be an Office action containing only a restriction requirement) appears in the Patent Application Information Retrieval (PAIR) system. Applicant may check the status of the application using PAIR.

(6) The petition to make special must be accompanied by a request for early publication in compliance with 37 CFR 1.219 and the publication fee set forth in 37 CFR 1.18(d).

Privacy Act Statement

The **Privacy Act of 1974 (P.L. 93-579)** requires that you be given certain information in connection with your submission of the attached form related to a patent application or patent. Accordingly, pursuant to the requirements of the Act, please be advised that: (1) the general authority for the collection of this information is 35 U.S.C. 2(b)(2); (2) furnishing of the information solicited is voluntary; and (3) the principal purpose for which the information is used by the U.S. Patent and Trademark Office is to process and/or examine your submission related to a patent application or patent. If you do not furnish the requested information, the U.S. Patent and Trademark Office may not be able to process and/or examine your submission, which may result in termination of proceedings or abandonment of the application or expiration of the patent.

The information provided by you in this form will be subject to the following routine uses:

1. The information on this form will be treated confidentially to the extent allowed under the Freedom of Information Act (5 U.S.C. 552) and the Privacy Act (5 U.S.C 552a). Records from this system of records may be disclosed to the Department of Justice to determine whether disclosure of these records is required by the Freedom of Information Act.
2. A record from this system of records may be disclosed, as a routine use, in the course of presenting evidence to a court, magistrate, or administrative tribunal, including disclosures to opposing counsel in the course of settlement negotiations.
3. A record in this system of records may be disclosed, as a routine use, to a Member of Congress submitting a request involving an individual, to whom the record pertains, when the individual has requested assistance from the Member with respect to the subject matter of the record.
4. A record in this system of records may be disclosed, as a routine use, to a contractor of the Agency having need for the information in order to perform a contract. Recipients of information shall be required to comply with the requirements of the Privacy Act of 1974, as amended, pursuant to 5 U.S.C. 552a(m).
5. A record related to an International Application filed under the Patent Cooperation Treaty in this system of records may be disclosed, as a routine use, to the International Bureau of the World Intellectual Property Organization, pursuant to the Patent Cooperation Treaty.
6. A record in this system of records may be disclosed, as a routine use, to another federal agency for purposes of National Security review (35 U.S.C. 181) and for review pursuant to the Atomic Energy Act (42 U.S.C. 218(c)).
7. A record from this system of records may be disclosed, as a routine use, to the Administrator, General Services, or his/her designee, during an inspection of records conducted by GSA as part of that agency's responsibility to recommend improvements in records management practices and programs, under authority of 44 U.S.C. 2904 and 2906. Such disclosure shall be made in accordance with the GSA regulations governing inspection of records for this purpose, and any other relevant (*i.e.*, GSA or Commerce) directive. Such disclosure shall not be used to make determinations about individuals.
8. A record from this system of records may be disclosed, as a routine use, to the public after either publication of the application pursuant to 35 U.S.C. 122(b) or issuance of a patent pursuant to 35 U.S.C. 151. Further, a record may be disclosed, subject to the limitations of 37 CFR 1.14, as a routine use, to the public if the record was filed in an application which became abandoned or in which the proceedings were terminated and which application is referenced by either a published application, an application open to public inspection or an issued patent.
9. A record from this system of records may be disclosed, as a routine use, to a Federal, State, or local law enforcement agency, if the USPTO becomes aware of a violation or potential violation of law or regulation.

PATENT

IN THE UNITED STATES PATENT AND TRADEMARK OFFICE

In re application of: Wang et al.	Docket No.: SLDMP004AD1
Application No.: Not yet assigned	Examiner: Not yet assigned
Filed: June 22, 2011	Art Unit: Not yet assigned
Title: ELECTROCHROMIC DEVICES	Confirmation No.: Not yet assigned

CERTIFICATE OF EFS-WEB TRANSMISSION
I hereby certify that this correspondence is being transmitted electronically through EFS-WEB to the Commissioner for Patents, P.O. Box 1450 Alexandria, VA 22313-1450 on June 22, 2011.

Signed: /Ravel Berman/
Ravel Berman

STATEMENT OF SPECIAL STATUS FOR ELIGIBILITY REQUIREMENT FOR GREEN TECHNOLOGY PILOT PROGRAM (74 Fed. Reg. 64666)

Commissioner for Patents
P.O. Box 1450
Alexandria, VA 22313-1450

Dear Sir/Madam:

This statement accompanies a Petition to Make Special Under the Green Technology Pilot Program (74 Fed. Reg. 64666). The subject patent application meets the following conditions of eligibility:

Basis for Special Status and Statement Pertaining to Materiality Standard

1. The claims of the subject patent application are directed to a single invention that materially contributes to energy use and conservation as well as greenhouse gas emission reduction. The invention is directed to electrochromic (EC) device technology in energy saving "smart" EC windows that are being developed for large scale commercial use.

2. The invention materially contributes to energy use and conservation because the EC window's low power requirements and efficient transitions from transparent to dark states allow for more efficient energy utilization and conservation of energy resources. Particularly with respect to energy conservation, the technology is well suited for use in large buildings where large areas are covered with windows.

3. The invention materially contributes to greenhouse gas emission reduction because large scale use of the EC windows will make possible enormous reductions in heating and cooling costs associated with electricity use, thus reducing demand on electrical power plants that burn fossil fuels.

4. If the USPTO determines that the claims are directed to multiple inventions, Applicants agree to make an election without traverse in a telephonic interview, and to elect an invention that meets the eligibility requirements of the Green Technology Pilot Program.

5. The subject patent application is a non-reissue, non-reexamination, non-provisional utility application filed under 35 USC §111(a).

I declare that all statements made herein of my own knowledge are true; that all statements made on the information and behalf are believed to be true and further that these statements made with the knowledge that willful false statements are punishable by fine or imprisonment, or both under section 1001 of Title 18 of the United States Code, and that such willful false statements may jeopardize the validity of the application or any patent issuing thereon.

Respectfully submitted,
WEAVER AUSTIN VILLENEUVE & SAMPSON LLP

/Brian D. Griedel/
Brian D. Griedel
Reg. No. 48,425

P.O. Box 70250
Oakland, CA 94612-0250
(510) 663-1100

UNITED STATES PATENT AND TRADEMARK OFFICE

UNITED STATES DEPARTMENT OF COMMERCE
United States Patent and Trademark Office
Address: COMMISSIONER FOR PATENTS
P.O. Box 1450
Alexandria, Virginia 22313-1450
www.uspto.gov

APPLICATION NO.	FILING DATE	FIRST NAMED INVENTOR	ATTORNEY DOCKET NO.	CONFIRMATION NO.
13/166,537	06/22/2011	Zhongchun Wang	SLDMP004AD1	6124

22434 7590 08/01/2011
Weaver Austin Villeneuve & Sampson LLP
P.O. BOX 70250
OAKLAND, CA 94612-0250

EXAMINER

ART UNIT	PAPER NUMBER
2873	

NOTIFICATION DATE	DELIVERY MODE
08/01/2011	ELECTRONIC

Please find below and/or attached an Office communication concerning this application or proceeding.

The time period for reply, if any, is set in the attached communication.

Notice of the Office communication was sent electronically on above-indicated "Notification Date" to the following e-mail address(es):

USPTO@wavsip.com

UNITED STATES PATENT AND TRADEMARK OFFICE

Commissioner for Patents
United States Patent and Trademark Office
P.O. Box 1450
Alexandria, VA 22313-1450
www.uspto.gov

Weaver Austin Villeneuve & Sampson LLP
P.O. BOX 70250
OAKLAND CA 94612-0250

In re Application of	:	
WANG et al.	:	DECISION ON PETITION
Application No. 13/166,537	:	TO MAKE SPECIAL UNDER
Filed: June 22, 2011	:	THE GREEN TECHNOLOGY
Attorney Docket No. SLDMP004AD1	:	PILOT PROGRAM

This is a decision on the petition under 37 CFR 1.102, filed on June 22, 2011, to make the above-identified application special under the pilot program for applications pertaining to Green Technologies as set forth 74 Federal Register Notice 64666 (December 8, 2009) and amended by 75 Federal Register Notice 28554 (May 21, 2010) and 75 Federal Register Notice 69049 (November 10, 2010).

The petition is **DISMISSED**.

If reconsideration of this decision is desired, a petition for reconsideration must be filed within ONE (1) MONTH OR THIRTY (30) DAYS from the mail date of this decision, whichever is longer. No extension of this time limit can be granted under 37 CFR 1.136(a) or (b). The petition for reconsideration should include an exhaustive attempt to provide the lacking item(s) noted below, since, after a decision on the petition for reconsideration, no further reconsideration or review of the matter will be undertaken by the Director.

A grantable petition to make an application special under 37 CFR 1.102 and the pilot program as set forth in 74 FR 64666 must be directed to a nonprovisional application filed under 35 USC 111(a) or be a national stage entry under 35 USC 371, exclusive of any reissue applications and be filed prior to the date of the notice, December 8, 2009.

In order to qualify for special status, the following requirements must be met. 1) The application must have no more than 3 independent claims and no more than 20 total claims. 2) The application must not contain any multiple dependent claims. 3) The petition must state the basis for seeking special status, i.e., the claimed invention either: A) materially enhances the quality of the environment or B) materially contributes to: i) the discovery or development of renewable energy resources, ii) the more efficient utilization and conservation of energy resources, or iii) greenhouse gas emission reduction. 4) If the disclosure is not clear on its face that the claimed invention materially contributes under category (A) or (B), the petition must be accompanied by a statement by the applicant, assignee, or an attorney/agent registered to practice before the Office explaining how the materiality standard is met. 5) A statement that applicant will agree to

make an election without traverse in a telephonic interview if a restriction requirement is made by the examiner. 6) The petition to make special must be filed electronically. 7) The petition must be filed at least one day prior to the date that a first Office Action appears in the Patent Application Information Retrieval (PAIR) system. 8) The petition must be accompanied by a request for early publication in compliance with 37 CFR 1.219 and include the publication fee as set forth in 37 CFR 1.18(d).

The requirement for a fee for consideration of the petition to make special for applications pertaining to Green Technologies has been waived.

The petition lacks item 4.

In regard to item 4, applicant's statement pertaining to how the materiality standard is met does not satisfy the requirements for this pilot. The petition alleges that the claimed invention contributes to more efficient utilization and conservation of energy resources and greenhouse gas emission reduction. The claims are generally directed to an electrochromic device. The materiality standard does not permit an applicant to speculate as to how a hypothetical end-user might specially apply the invention. Any argument that the claimed invention can be used to provide more efficient utilization of energy resources and/or greenhouse gas emission reduction is considered speculation as to how a hypothetical end-user might specially apply the claimed invention.

Any reconsideration of this decision should be submitted through the USPTO electronic filing system, EFS-Web, and selecting the document description of "Petition for Green Tech Pilot" on the EFS-Web screen.

Telephone inquiries concerning this decision should be directed to Colleen Dunn at 571-272-1170.

The application is being forwarded to the appropriate Technology Center Art Unit for action in its regular turn.

/Colleen Dunn/

Colleen Dunn
Quality Assurance Specialist
Technology Center 2800

PATENT

IN THE UNITED STATES PATENT AND TRADEMARK OFFICE

In re application of: Wang et al.	Docket No.: SLDMP004AD1
Application No.: 13/166,537	Examiner: Tra, Tuyen Q.
Filed: June 22, 2011	Art Unit: 2873
Title: ELECTROCHROMIC DEVICES	Confirmation No.: 6124

CERTIFICATE OF EFS-WEB TRANSMISSION
I hereby certify that this correspondence is being transmitted electronically through EFS-WEB to the Commissioner for Patents, P.O. Box 1450 Alexandria, VA 22313-1450 on August 29, 2011.

Signed: /Ravel Berman/
Ravel Berman

PETITION FOR RECONSIDERATION OF MATERIALITY STANDARD SUFFICIENCY FOR GREEN TECHNOLOGY PILOT PROGRAM

Commissioner for Patents
P.O. Box 1450
Alexandria, VA 22313-1450

Dear Sir/Madam:

In response to the dismissal of the Petition to Make Special under the Green Technology Pilot Program (74 Fed. Reg. 64666), filed June 22, 2011, the following is presented as further and clarified evidence of sufficiency of **Item 4** of the requirements for qualification of special status.

Applicants thank Quality Assurance Specialist, Colleen Dunn, for taking the time to discuss this case on August 24, 2011 in a telephone interview. Specifically discussed was the fact that because the pending claims did not recite that the electrochromic device was part of a window structure, it would be speculative as to how the device might be used, for example, to save energy. Therefore, in order to satisfy Item 4, Applicants filed, on August 25, 2011, a preliminary amendment that amends pending claims 1, 8, and 15 to recite, "A window coating comprising an electrochromic device…," to ensure that the claims are unambiguous as to the use

of the recited electrochromic device, that is, as a coating on a window. Windows having such a coating are dynamic "smart" windows which provide significant energy savings.

In furtherance of gaining acceptance of the GreenTech petition for special status in this case, Applicants also have elaborated and clarified the Statement providing basis for Special Status below. Applicants respectfully request reconsideration of the sufficiency of the materiality showing, because the materiality standard is met by the subject patent application at least for the following reasons.

Basis for Special Status and Statement Pertaining to Materiality Standard

1. The assignee of the subject application is Soladigm, Inc., aka "Soladigm." Soladigm is a developer of highly energy efficient dynamic glass electrochromic or "smart" windows which switch from transparent to tinted on demand. Soladigm is headquartered in Milpitas, California. For more information, visit www.soladigm.com. Soladigm's Dynamic Glass enables control of heat and glare in buildings while providing greater comfort, uninterrupted views, and natural daylight.

2. On August 9, 2011 Soladigm announced that the U.S. Department of Energy's National Renewable Energy Laboratory (NREL) has confirmed that Soladigm's Dynamic Glass has passed ASTM E2141-06 durability testing. NREL tested Soladigm's Dynamic Glass units, which were put under the equivalent conditions of the sun's radiation at an elevated temperature, simulating the effect of real-world use in buildings for the lifetime of window glass. More than 50,000 cycles of testing were completed, after which each unit showed no change in physical appearance or performance. These tests confirm that the durability and performance characteristics of Soladigm's windows surpass any previously tested.

3. The tie between energy conservation and the claimed technology is that smart windows, which can darken or lighten on demand, allow the user to block the sun's rays in order to keep heat out, and thus use less energy to cool interior spaces, as well as to lighten the window in order to allow the sun's rays to enter interior spaces and thus save energy that would otherwise be used to light and heat the interior spaces. Thus, radiant solar energy is kept out during summer days, thereby reducing air conditioning demand, and radiant thermal energy is allowed

in during colder weather, thereby reducing heating demand. Because switching between transparent and tinted states can be controlled automatically and remotely through a building's existing automated HVAC (heating, ventilation and air conditioning) control system, smart windows such as those disclosed and claimed in the instant patent application will result in much greater energy savings than manually controlled window blinds, particularly in large office buildings. Currently, cooling large buildings requires tremendous amounts of energy, particularly in warm weather climates. Without an automated control system and windows that can reliably switch between transparent and tinted states, it is not feasible to effectively control all the windows in a large building in a manner that realizes substantial energy savings.

4. Thus, the claims of the subject patent application are directed to a single invention that materially contributes to energy use and conservation as well as reduction of greenhouse gas emissions. The invention is directed to electrochromic device technology that is coated on a window pane. This technology is currently in development for Soladigm's electrochromic Dynamic Glass window program for large scale commercial use.

5. The invention materially contributes to energy use and conservation because the electrochromic device's low power requirements and efficient transitions from transparent to tinted states allow for more efficient energy utilization and conservation of energy resources. Particularly with respect to energy conservation, the technology is well suited for use in large buildings where large areas are covered with windows.

6. The U.S. Department of Energy has estimated that the use of electrochromic windows could reduce peak electric loads in such buildings by 20-30% (see E.S. Lee *et al.* Energy Performance Analysis of Electrochromic Windows in New York Commercial Office Buildings, LBNL-50096, April 2002, Lawrence Berkeley National Laboratory, Berkeley, CA). By current standards, it is believed that existing Soladigm Dynamic Glass windows will reduce HVAC energy usage by 25% and peak load by 30% in commercial buildings. This is a significant energy savings over conventional window technology, such as "low E" coatings currently on the market.

7. The invention materially contributes to greenhouse gas emission reduction because large scale use of the claimed device in electrochromic windows will make possible

enormous reductions in heating and cooling costs associated with electricity use (see above). Since 50% of the electricity generated in the United States is from coal, the invention will reduce demand on electrical power plants that burn fossil fuels. Thus, the invention will help reduce greenhouse gas emissions.

8. If the USPTO determines that the claims are directed to multiple inventions, Applicants agree to make an election without traverse in a telephonic interview, and to elect an invention that meets the eligibility requirements of the Green Technology Pilot Program.

9. The subject patent application is a non-reissue, non-reexamination, non-provisional utility application filed under 35 USC §111(a).

10. I declare that all statements made herein of my own knowledge are true; that all statements made on the information and behalf are believed to be true and further that these statements made with the knowledge that willful false statements are punishable by fine or imprisonment, or both under section 1001 of Title 18 of the United States Code, and that such willful false statements may jeopardize the validity of the application or any patent issuing thereon.

Respectfully submitted,
WEAVER AUSTIN VILLENEUVE & SAMPSON LLP

/Stephen C. Glade/
Stephen C. Glade
Reg. No. 57,601

P.O. Box 70250
Oakland, CA 94612-0250
(510) 663-1100

UNITED STATES PATENT AND TRADEMARK OFFICE

UNITED STATES DEPARTMENT OF COMMERCE
United States Patent and Trademark Office
Address: COMMISSIONER FOR PATENTS
P.O. Box 1450
Alexandria, Virginia 22313-1450
www.uspto.gov

APPLICATION NO.	FILING DATE	FIRST NAMED INVENTOR	ATTORNEY DOCKET NO.	CONFIRMATION NO.
13/166,537	06/22/2011	Zhongchun Wang	SLDMP004AD1	6124

22434 7590 09/29/2011
Weaver Austin Villeneuve & Sampson LLP
P.O. BOX 70250
OAKLAND, CA 94612-0250

EXAMINER
TRA, TUYEN Q

ART UNIT	PAPER NUMBER
2873	

NOTIFICATION DATE	DELIVERY MODE
09/29/2011	ELECTRONIC

Please find below and/or attached an Office communication concerning this application or proceeding.

The time period for reply, if any, is set in the attached communication.

Notice of the Office communication was sent electronically on above-indicated "Notification Date" to the following e-mail address(es):

USPTO@wavsip.com

UNITED STATES PATENT AND TRADEMARK OFFICE

Commissioner for Patents
United States Patent and Trademark Office
P.O. Box 1450
Alexandria, VA 22313-1450
www.uspto.gov

Weaver Austin Villeneuve & Sampson LLP
P.O. BOX 70250
OAKLAND CA 94612-0250

9/29/11

In re Application of	:	
Wang et al.	:	DECISION ON PETITION
Application No. 13/166,537	:	TO MAKE SPECIAL UNDER
Filed: 6/22/2010	:	THE GREEN TECHNOLOGY
Attorney Docket No. **SLDMP004AD1**	:	PILOT PROGRAM

This is a decision on the request for reconsideration, filed 8/29/2011, to make the above-identified application special under the pilot program for applications pertaining to Green Technologies as set forth in 74 Federal Register Notice 64666 (December 8, 2009) and amended by 75 Federal Register Notice 28554 (May 21, 2010) and 75 Federal Register Notice 69049 (November 10, 2010).

The petition is **GRANTED**.

A grantable petition to make an application special under 37 CFR 1.102 and the pilot program as set forth in 74 FR 64666 must be directed to a nonprovisional application filed under 35 USC 111(a) or be a national stage entry under 35 USC 371, exclusive of any reissue applications.

In order to qualify for special status, the following requirements must be met. 1) The application must have no more than 3 independent claims and no more than 20 total claims. 2) The application must not contain any multiple dependent claims. 3) The petition must state the basis for seeking special status, i.e., the claimed invention either: A) materially enhances the quality of the environment or B) materially contributes to: i) the discovery or development of renewable energy resources, ii) the more efficient utilization and conservation of energy resources, or iii) greenhouse gas emission reduction. 4) If the disclosure is not clear on its face that the claimed invention materially contributes under category (A) or (B), the petition must be accompanied by a statement by the applicant, assignee, or an attorney/agent registered to practice before the Office explaining how the materiality standard is met. 5) A statement that applicant will agree to make an election without traverse in a telephonic interview if a restriction requirement is made by the examiner. 6) The petition to make special must be filed electronically. 7) The petition must be filed at least one day prior to the date that a first Office Action appears in the Patent Application Information Retrieval (PAIR) system. 8) The petition must be accompanied by a request for early publication in compliance with 37 CFR 1.219 and include the publication fee as set forth in 37 CFR 1.18(d).

The requirement for a fee for consideration of the petition to make special for applications pertaining to Green Technologies has been waived.

The instant petition complies with items 1 – 8 above. Accordingly, the above-identified application has been accorded "special" status.

Telephone inquires concerning this decision should be directed to Tom Dunn at 571-272-1171.

The application is being forwarded to the Technology Center Art Unit 2873 for action on the merits commensurate with this decision.

/Tom Dunn/

Tom Dunn
Quality Assurance Specialist
Technology Center 1700

Attorney Docket No.: 30555-0002001

IN THE UNITED STATES PATENT AND TRADEMARK OFFICE

Applicant :	Alexander Fassbender	Art Unit :	Unknown
Patent No. :		Examiner :	Unknown
Issue Date :		Conf. No. :	
Serial No. :			
Filed :			
Title :	WASTEWATER TREATMENT		

Commissioner for Patents
P.O. Box 1450
Alexandria, VA 22313-1450

PETITION TO MAKE SPECIAL UNDER 37 CFR §1.102(c)(2)(i)

This is a Petition to Make Special the examination of the above-identified patent application under CFR §1.102(c)(2)(i). As such, no fee is required for this petition.

Special status is sought because the invention materially enhances the quality of the environment of mankind by contributing to the restoration or maintenance of water, a basic life-sustaining natural element. This invention is widely applicable to most of the 18,000 wastewater treatment plants in the United States. Nutrient removal – a major emphasis of the Environmental Protection Area (EPA) in areas such as the Chesapeake Bay, San Francisco Bay, Puget Sound, and Mississippi watershed regions – is specifically addressed.

Accordingly, Applicant requests that this Petition to Make Special be granted, and examination of the above-identified application be advanced.

No fees are believed to be due. Please apply any charges or credits to Deposit Account No. 06-1050, referencing Attorney Docket No. 30555-0002001.

CERTIFICATE OF MAILING BY EFS-WEB FILING

I hereby certify that this paper was filed with the Patent and Trademark Office using the EFS-WEB system on this date: June 22, 2011.

Respectfully submitted,

Date: June 22, 2011

/Heather L. Flanagan/
Heather L. Flanagan, Ph.D.
Reg. No. 54,101

Customer Number 26171
Fish & Richardson P.C.
Telephone: (512) 472-5070
Facsimile: (877) 769-7945

11156843.doc

UNITED STATES PATENT AND TRADEMARK OFFICE

UNITED STATES DEPARTMENT OF COMMERCE
United States Patent and Trademark Office
Address: COMMISSIONER FOR PATENTS
P.O. Box 1450
Alexandria, Virginia 22313-1450
www.uspto.gov

APPLICATION NO.	FILING DATE	FIRST NAMED INVENTOR	ATTORNEY DOCKET NO.	CONFIRMATION NO.
13/166,568	06/22/2011	Alexander Fassbender	30555-0002001	6209

26171 7590 08/22/2011
FISH & RICHARDSON P.C. (DC)
P.O. BOX 1022
MINNEAPOLIS, MN 55440-1022

EXAMINER

ART UNIT	PAPER NUMBER
1778	

NOTIFICATION DATE	DELIVERY MODE
08/22/2011	ELECTRONIC

Please find below and/or attached an Office communication concerning this application or proceeding.

The time period for reply, if any, is set in the attached communication.

Notice of the Office communication was sent electronically on above-indicated "Notification Date" to the following e-mail address(es):

PATDOCTC@fr.com

UNITED STATES PATENT AND TRADEMARK OFFICE

Commissioner for Patents
United States Patent and Trademark Office
P.O. Box 1450
Alexandria, VA 22313-1450
www.uspto.gov

AUG 2 2 2011

FISH & RICHARDSON P.C. (DC)
P.O. BOX 1022
MINNEAPOLIS MN 55440-1022

In re Application of	:	
Alexander Fassbender	:	DECISION ON PETITION
Application No. 13/166,568	:	TO MAKE SPECIAL UNDER
Filed: June 22, 2011	:	THE GREEN TECHNOLOGY
Attorney Docket No. 30555-0002001	:	PILOT PROGRAM

The Petition to Make Special under 37 CRF 1.102(c)(2)(i) filed on June 22, 2011 is being treated as a petition under the Green Technologies pilot program. It is noted that the USPTO revised the Petition to Make Special practice effective August 25, 2006 to discontinue the quality of environment eligibility (see Federal Register, Vol. 71, No. 122, pages 36323-36327, 06/26/2006). On December 8, 2009, the USPTO began a Green Technologies pilot, which is detailed on the USPTO's web site at: http://www.uspto.gov/patents/init_events/green_tech.jsp and in 74 Federal Register Notice 64666 (December 8, 2009) and amended by 75 Federal Register Notice 28554 (May 21, 2010) and 75 Federal Register Notice 69049 (November 10, 2010).

The petition is **DISMISSED**.

If reconsideration of this decision is desired, a petition for reconsideration must be filed within ONE (1) MONTH OR THIRTY (30) DAYS from the mail date of this decision, whichever is longer. No extension of this time limit can be granted under 37 CFR 1.136(a) or (b). The petition for reconsideration should include an exhaustive attempt to provide the lacking item(s) noted below, since, after a decision on the petition for reconsideration, no further reconsideration or review of the matter will be undertaken by the Director.

A grantable petition to make an application special under 37 CFR 1.102 and the pilot program as set forth in 74 FR 64666 must be directed to a nonprovisional application filed under 35 USC 111(a) or be a national stage entry under 35 USC 371, exclusive of any reissue applications.

In order to qualify for special status, the following requirements must be met. 1) The application must have no more than 3 independent claims and no more than 20 total claims. 2) The application must not contain any multiple dependent claims. 3) The petition must state the basis for seeking special status, i.e., the claimed invention either: A) materially enhances the quality of the environment or B) materially contributes to: i) the discovery or development of renewable energy resources, ii) the more efficient utilization and conservation of energy resources, or iii) greenhouse gas emission reduction. 4) If the disclosure is not clear on its face that the claimed

invention materially contributes under category (A) or (B), the petition must be accompanied by a statement by the applicant, assignee, or an attorney/agent registered to practice before the Office explaining how the materiality standard is met. 5) A statement that applicant will agree to make an election without traverse in a telephonic interview if a restriction requirement is made by the examiner. 6) The petition to make special must be filed electronically. 7) The petition must be filed at least one day prior to the date that a first Office Action appears in the Patent Application Information Retrieval (PAIR) system. 8) The petition must be accompanied by a request for early publication in compliance with 37 CFR 1.219 and include the publication fee as set forth in 37 CFR 1.18(d).

The requirement for a fee for consideration of the petition to make special for applications pertaining to Green Technologies has been waived.

The petition lacks items (1), (5) and (8). Regarding item (1), the present application contains more than 20 claims. Regarding item (5), the petition did not include a statement that the applicant agrees to make a telephonic election without traverse if a restriction requirement is made by the examiner. Regarding item (8), the applicant did not request early publication and the publication fee as set forth in 37 CFR 1.18(d) has not been received.

Any reconsideration of this decision should be submitted through the USPTO electronic filing system, EFS-Web, and selecting the document description of "Petition for Green Tech Pilot" on the EFS-Web screen.

Telephone inquires concerning this decision should be directed to Blaine Copenheaver at 571-272-1156.

The application is being forwarded to the examiner for action in its regular turn.

/Blaine Copenheaver/

Blaine Copenheaver
Quality Assurance Specialist
Technology Center 1700

Attorney Docket No.: 30555-0002001

IN THE UNITED STATES PATENT AND TRADEMARK OFFICE

Applicant	: Alexander Fassbender	Art Unit	: 1778
Serial No.	: 13/166,568	Examiner	: Unknown
Filed	: June 22, 2011	Conf. No.	: 6209
Title	: WASTEWATER TREATMENT		

Commissioner for Patents
P.O. Box 1450
Alexandria, VA 22313-1450

PETITION FOR RECONSIDERATION UNDER
THE GREEN TECHNOLOGIES PILOT PROGRAM

In the Office Communication dated August 22, 2011, the Office noted that the Petition to Make Special filed on June 22, 2011, for the above-captioned application did not satisfy three criteria to qualify for special status under the Green Technologies Pilot Program. This Petition for Reconsideration is an exhaustive attempt to provide the lacking items as noted.

1) A Preliminary Amendment reducing the number of claims in the application to 20 total claims (2 independent) is filed herewith.

2) The application does not contain any multiple dependent claims.

3) As stated in the Petition filed June 22, 2011, the invention materially enhances the quality of the environment of mankind by contributing to the restoration or maintenance of water, a basic life-sustaining natural element. This invention is widely applicable to most of the 18,000 wastewater treatment plants in the United States. Nutrient removal – a major emphasis of the Environmental Protection Area (EPA) in areas such as the Chesapeake Bay, San Francisco Bay, Puget Sound, and Mississippi watershed regions – is specifically addressed.

4) The application is directed to Wastewater Management, and thus the disclosure is clear on its face that the claimed invention materially contributes under category (A), materially enhancing the quality of the environment.

CERTIFICATE OF MAILING BY EFS-WEB FILING

I hereby certify that this paper was filed with the Patent and Trademark Office using the EFS-WEB system on this date: September 8, 2011.

5) Applicant hereby agrees to make an election without traverse in a telephonic interview if a restriction requirement is made by the examiner.

6) This Petition for Reconsideration is being filed electronically under the document description of "Petition for Green Tech Pilot."

7) As of the filing date of this paper, a first Office Action for this application has not appeared in the Patent Application Information Retrieval (PAIR) system. Thus, it is believed that this Petition will be received by the USPTO at least one day prior to the date that a first Office Action appears in PAIR.

8) Applicant hereby requests early publication under 37 CFR 1.219. The publication fee as set forth in 37 CFR 1.18(d) is being paid concurrently herewith on the Electronic Filing System (EFS) by way of Deposit Account authorization.

Applicant earnestly requests that this Petition for Reconsideration be granted, and examination of the above-identified application be advanced.

Applicant notes that the requirement for the fee for consideration of the petition to make special for applications pertaining to Green Technologies has been waived. As such, no fee is believed to be required for this Petition for Reconsideration. If however, a fee is required, please apply this fee as well as any other charges or credits to Deposit Account No. 06-1050, referencing Attorney Docket No. 30555-0002001.

Respectfully submitted,

Date: September 8, 2011

/Heather L. Flanagan/
Heather L. Flanagan, Ph.D.
Reg. No. 54,101

Customer Number 26171
Fish & Richardson P.C.
Telephone: (512) 472-5070
Facsimile: (877) 769-7945

11174079.doc

UNITED STATES PATENT AND TRADEMARK OFFICE

UNITED STATES DEPARTMENT OF COMMERCE
United States Patent and Trademark Office
Address: COMMISSIONER FOR PATENTS
P.O. Box 1450
Alexandria, Virginia 22313-1450
www.uspto.gov

APPLICATION NO.	FILING DATE	FIRST NAMED INVENTOR	ATTORNEY DOCKET NO.	CONFIRMATION NO.
13/166,568	06/22/2011	Alexander Fassbender	30555-0002001	6209

26171 7590 09/29/2011
FISH & RICHARDSON P.C. (DC)
P.O. BOX 1022
MINNEAPOLIS, MN 55440-1022

EXAMINER

ART UNIT	PAPER NUMBER
1778	

NOTIFICATION DATE	DELIVERY MODE
09/29/2011	ELECTRONIC

Please find below and/or attached an Office communication concerning this application or proceeding.

The time period for reply, if any, is set in the attached communication.

Notice of the Office communication was sent electronically on above-indicated "Notification Date" to the following e-mail address(es):

PATDOCTC@fr.com

UNITED STATES PATENT AND TRADEMARK OFFICE

Commissioner for Patents
United States Patent and Trademark Office
P.O. Box 1450
Alexandria, VA 22313-1450
www.uspto.gov

FISH & RICHARDSON P.C. (DC)
P.O. BOX 1022
MINNEAPOLIS MN 55440-1022

9/29/11

In re Application of	:	
Fassbender	:	DECISION ON PETITION
Application No. 13/166,568	:	TO MAKE SPECIAL UNDER
Filed: 6/22/2011	:	THE GREEN TECHNOLOGY
Attorney Docket No. **30555-0002001**	:	PILOT PROGRAM

This is a decision on the request for reconsideration, filed 9/8/2011, to make the above-identified application special under the pilot program for applications pertaining to Green Technologies as set forth in 74 Federal Register Notice 64666 (December 8, 2009) and amended by 75 Federal Register Notice 28554 (May 21, 2010) and 75 Federal Register Notice 69049 (November 10, 2010).

The petition is **GRANTED**.

A grantable petition to make an application special under 37 CFR 1.102 and the pilot program as set forth in 74 FR 64666 must be directed to a nonprovisional application filed under 35 USC 111(a) or be a national stage entry under 35 USC 371, exclusive of any reissue applications.

In order to qualify for special status, the following requirements must be met. 1) The application must have no more than 3 independent claims and no more than 20 total claims. 2) The application must not contain any multiple dependent claims. 3) The petition must state the basis for seeking special status, i.e., the claimed invention either: A) materially enhances the quality of the environment or B) materially contributes to: i) the discovery or development of renewable energy resources, ii) the more efficient utilization and conservation of energy resources, or iii) greenhouse gas emission reduction. 4) If the disclosure is not clear on its face that the claimed invention materially contributes under category (A) or (B), the petition must be accompanied by a statement by the applicant, assignee, or an attorney/agent registered to practice before the Office explaining how the materiality standard is met. 5) A statement that applicant will agree to make an election without traverse in a telephonic interview if a restriction requirement is made by the examiner. 6) The petition to make special must be filed electronically. 7) The petition must be filed at least one day prior to the date that a first Office Action appears in the Patent Application Information Retrieval (PAIR) system. 8) The petition must be accompanied by a request for early publication in compliance with 37 CFR 1.219 and include the publication fee as set forth in 37 CFR 1.18(d).

The requirement for a fee for consideration of the petition to make special for applications pertaining to Green Technologies has been waived.

The instant petition complies with items 1 – 8 above. Accordingly, the above-identified application has been accorded "special" status.

Telephone inquires concerning this decision should be directed to Tom Dunn at 571-272-1171.

The application is being forwarded to the Technology Center Art Unit 1778 for action on the merits commensurate with this decision.

/Tom Dunn/

Tom Dunn
Quality Assurance Specialist
Technology Center 1700

IN THE UNITED STATES PATENT AND TRADEMARK OFFICE

Application No.	:	NEW
Applicant	:	Meloni
Filed	:	June 22, 2011
TC/AU	:	UNKNOWN
Examiner	:	UNKNOWN
Docket Number	:	946959600082
Customer No.	:	41498
Re	:	Workpiece Characterization System

Commissioner for Patents
P. O. Box 1450
Alexandria, VA 22313-1450

LETTER (Supplement to PTO Form PTO/SB/420)

The invention claimed in the present application is directed to producing high output light emitting diodes (LEDs) suitable for illumination. More particularly, the present invention is directed to a system and method that are particularly suited for characterizing the light emissions and physical properties of an LED in the production of LEDs. These LEDs are intended to replace incandescent lights and thereby save electricity, and also replace fluorescent lights and thereby save the environment from heavy metal contamination used in the production of fluorescent lights.

Applicant sincerely believes that all criteria have been met to participate in the green technology pilot program

Respectfully submitted,

DATE: June 22, 2011

Rudolph J. Buchel, Jr.
Reg. No. 43,448

Rudolph J. Buchel, Jr., PC
P.O. Box 702526
Dallas, Texas 75370-2526
(972) 840-1600 TELEPHONE
(972) 840-1609 FACSIMILE
r.buchel@buchel-ip.com EMAIL

Attorney for Applicant

Doc Code: PET.GREEN
Document Description: Petition for Green Tech Pilot

PTO/SB/420 (03-11)

PETITION TO MAKE SPECIAL UNDER THE GREEN TECHNOLOGY PILOT PROGRAM

Attorney Docket Number: 946959600082	Application Number (if known):	Filing date: June 22, 2011

First Named Inventor: Meloni

Title: Workpiece Characterization System

APPLICANT HEREBY REQUESTS TO PARTICIPATE IN THE GREEN TECHNOLOGY PILOT PROGRAM FOR THE ABOVE-IDENTIFIED APPLICATION. See Instruction Sheet on page 2.

This petition must be timely filed electronically using the USPTO electronic filing system, EFS-Web.

1. By filing this petition:

   Applicant is requesting early publication: Applicant hereby requests early publication under 37 CFR 1.219 and the publication fee set forth in 37 CFR 1.18(d) accompanies this request.

2. By filing this petition: applicant is agreeing to make an election without traverse in a telephonic interview and elect an invention that meets the eligibility requirements for the Green Technology Pilot Program, if the Office determines that the claims are not obviously directed to a single invention. See Instruction Sheet.

3. This request is accompanied by statements of special status for the eligibility requirement.

4. The application contains no more than three (3) independent claims and twenty (20) total claims.

5. The application does not contain any multiple dependent claims.

6. Other attachments: _____

Signature	Date June 22, 2011
Name (Print/Typed) Rudolph J. Buchel, Jr.	Registration Number 43448

Note: *Signatures of all the inventors or assignees of record of the entire interest or their representative(s) are required in accordance with 37 CFR 1.33 and 11.18. Please see 37 CFR 1.4(d) for the form of the signature. If necessary, submit multiple forms for more than one signature, see below*.*

☒ *Total of 1 forms are submitted.

If you need assistance in completing the form, call 1-800-PTO-9199 and select option 2.

UNITED STATES PATENT AND TRADEMARK OFFICE

UNITED STATES DEPARTMENT OF COMMERCE
United States Patent and Trademark Office
Address: COMMISSIONER FOR PATENTS
P.O. Box 1450
Alexandria, Virginia 22313-1450
www.uspto.gov

APPLICATION NO.	FILING DATE	FIRST NAMED INVENTOR	ATTORNEY DOCKET NO.	CONFIRMATION NO.
13/166,571	06/22/2011	Mark Anthony Meloni	946959600082	6216

41498 7590 11/15/2011
RUDOLPH J. BUCHEL JR., LAW OFFICE OF
P. O. BOX 702526
DALLAS, TX 75370-2526

EXAMINER

ART UNIT	PAPER NUMBER
2882	

MAIL DATE	DELIVERY MODE
11/15/2011	PAPER

Please find below and/or attached an Office communication concerning this application or proceeding.

The time period for reply, if any, is set in the attached communication.

UNITED STATES PATENT AND TRADEMARK OFFICE

Commissioner for Patents
United States Patent and Trademark Office
P.O. Box 1450
Alexandria, VA 22313-1450
www.uspto.gov

RUDOLPH J. BUCHEL JR., LAW OFFICE OF
P. O. BOX 702526
DALLAS TX 75370-2526

NOV 15 2011

In re Application of	:	
MELONI et al.	:	DECISION ON PETITION
Application No. 13/166,571	:	TO MAKE SPECIAL UNDER
Filed: June 22, 2011	:	THE GREEN TECHNOLOGY
Attorney Docket No. 946959600082	:	PILOT PROGRAM

This is a decision on the petition under 37 CFR 1.102, filed on June 22, 2011, to make the above-identified application special under the pilot program for applications pertaining to Green Technologies as set forth 74 Federal Register Notice 64666 (December 8, 2009) and amended by 75 Federal Register Notice 28554 (May 21, 2010) and 75 Federal Register Notice 69049 (November 10, 2010).

The petition is **DISMISSED**.

If reconsideration of this decision is desired, a petition for reconsideration must be filed within ONE (1) MONTH OR THIRTY (30) DAYS from the mail date of this decision, whichever is longer. No extension of this time limit can be granted under 37 CFR 1.136(a) or (b). The petition for reconsideration should include an exhaustive attempt to provide the lacking item(s) noted below, since, after a decision on the petition for reconsideration, no further reconsideration or review of the matter will be undertaken by the Director.

A grantable petition to make an application special under 37 CFR 1.102 and the pilot program as set forth in 74 FR 64666 must be directed to a nonprovisional application filed under 35 USC 111(a) or be a national stage entry under 35 USC 371, exclusive of any reissue applications and be filed prior to the date of the notice, December 8, 2009.

In order to qualify for special status, the following requirements must be met. 1) The application must have no more than 3 independent claims and no more than 20 total claims. 2) The application must not contain any multiple dependent claims. 3) The petition must state the basis for seeking special status, i.e., the claimed invention either: A) materially enhances the quality of the environment or B) materially contributes to: i) the discovery or development of renewable energy resources, ii) the more efficient utilization and conservation of energy resources, or iii) greenhouse gas emission reduction. 4) If the disclosure is not clear on its face that the claimed invention materially contributes under category (A) or (B), the petition must be accompanied by a statement by the applicant, assignee, or an attorney/agent registered to practice before the Office explaining how the materiality standard is met. 5) A statement that applicant will agree to

make an election without traverse in a telephonic interview if a restriction requirement is made by the examiner. 6) The petition to make special must be filed electronically. 7) The petition must be filed at least one day prior to the date that a first Office Action appears in the Patent Application Information Retrieval (PAIR) system. 8) The petition must be accompanied by a request for early publication in compliance with 37 CFR 1.219 and include the publication fee as set forth in 37 CFR 1.18(d).

The requirement for a fee for consideration of the petition to make special for applications pertaining to Green Technologies has been waived.

The petition lacks item 4.

In regard to item 4, applicant's statement pertaining to how the materiality standard is met does not satisfy the requirements for this pilot. The petition alleges that the claimed invention contributes to more efficient utilization and conservation of energy. The claims do not limited the light source to an LED or semiconductor based light emitting device. The materiality standard does not permit an applicant to speculate as to how a hypothetical end-user might specially apply the invention in a manner that could contribute to more efficient utilization and conservation of energy. Any argument that the claimed invention can be used with LEDs is considered speculate as to how a hypothetical end-user might specially apply the claimed invention. Favorable consideration would be given if the claims were amended to specifically require the light source to be an LED or semiconductor based light emitting device.

Any reconsideration of this decision should be submitted through the USPTO electronic filing system, EFS-Web, and selecting the document description of "Petition for Green Tech Pilot" on the EFS-Web screen.

Telephone inquiries concerning this decision should be directed to Colleen Dunn at 571-272-1170.

The application is being forwarded to the Technology Center Art Unit for action in its regular turn.

/Colleen Dunn/

Colleen Dunn
TQAS, TC 2800

Doc Code: PET.GREEN
Document Description: Petition for Green Tech Pilot

PTO/SB/420 (11-10)
Approved for use through 01/31/2011. OMB 0651-0062
U.S. Patent and Trademark Office; U. S. DEPARTMENT OF COMMERCE
Under the Paperwork Reduction Act of 1995, no persons are required to respond to a collection of information unless it displays a valid OMB control number.

PETITION TO MAKE SPECIAL UNDER THE GREEN TECHNOLOGY PILOT PROGRAM

Attorney Docket Number: 26139-18838 US	Application Number (if known): 13/166,601	Filing date: 06/22/2011
First Named Inventor: Brian D. Green		
Title: Ethanol Production in Microorganisms		

APPLICANT HEREBY REQUESTS TO PARTICIPATE IN THE GREEN TECHNOLOGY PILOT PROGRAM FOR THE ABOVE-IDENTIFIED APPLICATION. See Instruction Sheet on page 2.

This petition must be timely filed electronically using the USPTO electronic filing system, EFS-Web.

1. By filing this petition:

   Applicant is requesting early publication: Applicant hereby requests early publication under 37 CFR 1.219 and the publication fee set forth in 37 CFR 1.18(d) accompanies this request.

2. By filing this petition: applicant is agreeing to make an election without traverse in a telephonic interview and elect an invention that meets the eligibility requirements for the Green Technology Pilot Program, if the Office determines that the claims are not obviously directed to a single invention. See Instruction Sheet.

3. This request is accompanied by statements of special status for the eligibility requirement.

4. The application contains no more than three (3) independent claims and twenty (20) total claims.

5. The application does not contain any multiple dependent claims.

6. Other attachments: _____

Signature /Chris Ullsperger/	Date June 22, 2011
Name (Print/Typed) Chris Ullsperger	Registration Number 48,006

Note: *Signatures of all the inventors or assignees of record of the entire interest or their representative(s) are required in accordance with 37 CFR 1.33 and 11.18. Please see 37 CFR 1.4(d) for the form of the signature. If necessary, submit multiple forms for more than one signature see below*.*

☒ *Total of ONE forms are submitted.

The information is required to obtain or retain a benefit by the public which is to file (and by the USPTO to process) an application. Confidentiality is governed by 35 U.S.C. 122 and 37 CFR 1.11 and 1.14. This collection is estimated to take 12 hours to complete, including gathering, preparing, and submitting the completed application form to the USPTO. Time will vary depending upon the individual case. Any comments on the amount of time you require to complete this form and/or suggestions for reducing this burden, should be sent to the Chief Information Officer, U.S. Patent and Trademark Office, U.S. Department of Commerce, P.O. Box 1450, Alexandria, VA 22313-1450. DO NOT SEND FEES OR COMPLETED FORMS TO THIS ADDRESS. **SEND TO: Commissioner for Patents, P.O. Box 1450, Alexandria, VA 22313-1450.**

If you need assistance in completing the form, call 1-800-PTO-9199 and select option 2.

Under the Paperwork Reduction Act of 1995, no persons are required to respond to a collection of information unless it displays a valid OMB control number.

Instruction Sheet for Petition to Make Special Under the Green Technology Pilot Program

(Not to be Submitted to the USPTO)

The following is a summary of the requirements (for more information see the notices (i) "Pilot Program for Green Technologies Including Greenhouse Gas Reduction," (ii) "Elimination of Classification Requirement in the Green Technology Pilot Program," and (iii) "Expansion and Extension of the Green Technology Pilot Program," available on the USPTO web site at http://www.uspto.gov/patents/init_events/green_tech.jsp):

1) The application must be a non-reissue, non-provisional utility application filed under 35 U.S.C. 111 (a), or an international application that has entered the national stage in compliance with 35 U.S.C. 371, irrespective of the filing date of the application. Reexamination proceedings are excluded from this pilot program.

2) The application must contain three or fewer independent claims and twenty or fewer total claims. The application must not contain any multiple dependent claims. For an application that contains more than three independent claims or twenty total claims, or multiple dependent claims, applicant must file a preliminary amendment in compliance with 37 CFR 1.121 to cancel the excess claims and/or the multiple dependent claims at the time the petition to make special is filed.

3) The claims must be directed to a single invention that materially enhances the quality of the environment, or that materially contributes to: (1) the discovery or development of renewable energy resources; (2) the more efficient utilization and conservation of energy resources; or (3) green house gas emission reduction (see the eligibility requirements of sections II and III of the notice (i) cited above). The petition must include a statement that, if the USPTO determines that the claims are directed to multiple inventions (e.g., in a restriction requirement), applicant will agree to make an election without traverse in a telephonic interview, and elect an invention that meets the eligibility requirements in section II or III of the notice (i) cited above.

4) The petition to make special must be timely filed electronically using the USPTO electronic filing system, EFS-Web, and selecting the document description of "Petition for Green Tech Pilot" on the EFS-Web screen. Applicant should use form PTO/SB/420, which is available as a Portable Document Format (PDF) fillable form in EFS-Web and on the USPTO Web site.

5) The petition to make special must be filed at least one day prior to the date that a first Office action (which may be an Office action containing only a restriction requirement) appears in the Patent Application Information Retrieval (PAIR) system. Applicant may check the status of the application using PAIR.

6) The petition to make special must be accompanied by a request for early publication in compliance with 37 CFR 1.219 and the publication fee set forth in 37 CFR 1.18(d).

Privacy Act Statement

The **Privacy Act of 1974 (P.L. 93-579)** requires that you be given certain information in connection with your submission of the attached form related to a patent application or patent. Accordingly, pursuant to the requirements of the Act, please be advised that: (1) the general authority for the collection of this information is 35 U.S.C. 2(b)(2); (2) furnishing of the information solicited is voluntary; and (3) the principal purpose for which the information is used by the U.S. Patent and Trademark Office is to process and/or examine your submission related to a patent application or patent. If you do not furnish the requested information, the U.S. Patent and Trademark Office may not be able to process and/or examine your submission, which may result in termination of proceedings or abandonment of the application or expiration of the patent.

The information provided by you in this form will be subject to the following routine uses:

1. The information on this form will be treated confidentially to the extent allowed under the Freedom of Information Act (5 U.S.C. 552) and the Privacy Act (5 U.S.C 552a). Records from this system of records may be disclosed to the Department of Justice to determine whether disclosure of these records is required by the Freedom of Information Act.
2. A record from this system of records may be disclosed, as a routine use, in the course of presenting evidence to a court, magistrate, or administrative tribunal, including disclosures to opposing counsel in the course of settlement negotiations.
3. A record in this system of records may be disclosed, as a routine use, to a Member of Congress submitting a request involving an individual, to whom the record pertains, when the individual has requested assistance from the Member with respect to the subject matter of the record.
4. A record in this system of records may be disclosed, as a routine use, to a contractor of the Agency having need for the information in order to perform a contract. Recipients of information shall be required to comply with the requirements of the Privacy Act of 1974, as amended, pursuant to 5 U.S.C. 552a(m).
5. A record related to an International Application filed under the Patent Cooperation Treaty in this system of records may be disclosed, as a routine use, to the International Bureau of the World Intellectual Property Organization, pursuant to the Patent Cooperation Treaty.
6. A record in this system of records may be disclosed, as a routine use, to another federal agency for purposes of National Security review (35 U.S.C. 181) and for review pursuant to the Atomic Energy Act (42 U.S.C. 218(c)).
7. A record from this system of records may be disclosed, as a routine use, to the Administrator, General Services, or his/her designee, during an inspection of records conducted by GSA as part of that agency's responsibility to recommend improvements in records management practices and programs, under authority of 44 U.S.C. 2904 and 2906. Such disclosure shall be made in accordance with the GSA regulations governing inspection of records for this purpose, and any other relevant (*i.e.*, GSA or Commerce) directive. Such disclosure shall not be used to make determinations about individuals.
8. A record from this system of records may be disclosed, as a routine use, to the public after either publication of the application pursuant to 35 U.S.C. 122(b) or issuance of a patent pursuant to 35 U.S.C. 151. Further, a record may be disclosed, subject to the limitations of 37 CFR 1.14, as a routine use, to the public if the record was filed in an application which became abandoned or in which the proceedings were terminated and which application is referenced by either a published application, an application open to public inspection or an issued patent.
9. A record from this system of records may be disclosed, as a routine use, to a Federal, State, or local law enforcement agency, if the USPTO becomes aware of a violation or potential violation of law or regulation.

UNITED STATES PATENT AND TRADEMARK OFFICE

UNITED STATES DEPARTMENT OF COMMERCE
United States Patent and Trademark Office
Address: COMMISSIONER FOR PATENTS
P.O. Box 1450
Alexandria, Virginia 22313-1450
www.uspto.gov

APPLICATION NO.	FILING DATE	FIRST NAMED INVENTOR	ATTORNEY DOCKET NO.	CONFIRMATION NO.
13/166,601	06/22/2011	Brian Green	26139-18838	6284

96157 7590 08/29/2011
Joule/Fenwick
Silicon Valley Center
801 California Street
Mountain View, CA 94041

EXAMINER
LEE, JAE W

ART UNIT	PAPER NUMBER
1656	

NOTIFICATION DATE	DELIVERY MODE
08/29/2011	ELECTRONIC

Please find below and/or attached an Office communication concerning this application or proceeding.

The time period for reply, if any, is set in the attached communication.

Notice of the Office communication was sent electronically on above-indicated "Notification Date" to the following e-mail address(es):

ptoc@fenwick.com
cullsperger@fenwick.com
chong@jouleunlimited.com

UNITED STATES PATENT AND TRADEMARK OFFICE

Commissioner for Patents
United States Patent and Trademark Office
P.O. Box 1450
Alexandria, VA 22313-1450
www.uspto.gov

AUG 2 9 2011

Joule/Fenwick
Silicon Valley Center
801 California Street
Mountain View CA 94041

In re Application of	:	
GREEN, Brian *et al.*	:	DECISION ON PETITION
Application No. 13/166601	:	TO MAKE SPECIAL UNDER
Filed: June 22, 2011	:	THE GREEN TECHNOLOGY
Attorney Docket No. 26139-18838	:	PILOT PROGRAM

This is a decision on the petition under 37 CFR 1.102, filed June 22, 2011, to make the above-identified application special under the pilot program for applications pertaining to Green Technologies as set forth in 74 Federal Register Notice 64666 (December 8, 2009) and amended by 75 Federal Register Notice 28554 (May 21, 2010) and 75 Federal Register Notice 69049 (November 10, 2010).

The petition is **GRANTED**.

A grantable petition to make an application special under 37 CFR 1.102 and the pilot program as set forth in 74 FR 64666 must be directed to a nonprovisional application filed under 35 USC 111(a) or be a national stage entry under 35 USC 371, exclusive of any reissue applications.

In order to qualify for special status, the following requirements must be met. 1) The application must have no more than 3 independent claims and no more than 20 total claims. 2) The application must not contain any multiple dependent claims. 3) The petition must state the basis for seeking special status, i.e., the claimed invention either: A) materially enhances the quality of the environment or B) materially contributes to: i) the discovery or development of renewable energy resources, ii) the more efficient utilization and conservation of energy resources, or iii) greenhouse gas emission reduction. 4) If the disclosure is not clear on its face that the claimed invention materially contributes under category (A) or (B), the petition must be accompanied by a statement by the applicant, assignee, or an attorney/agent registered to practice before the Office explaining how the materiality standard is met. 5) A statement that applicant will agree to make an election without traverse in a telephonic interview if a restriction requirement is made by the examiner. 6) The petition to make special must be filed electronically. 7) The petition must be filed at least one day prior to the date that a first Office Action appears in the Patent Application Information Retrieval (PAIR) system. 8) The petition must be accompanied by a request for early publication in compliance with 37 CFR 1.219 and include the publication fee as set forth in 37 CFR 1.18(d).

The requirement for a fee for consideration of the petition to make special for applications pertaining to Green Technologies has been waived.

The instant petition complies with items 1 – 8 above. Accordingly, the above-identified application has been accorded "special" status.

Telephone inquires concerning this decision should be directed to Manjunath Rao at 571-272-0939.

The application is being forwarded to the Technology Center Art Unit 1656 for action on the merits commensurate with this decision.

/Manjunath Rao/

Manjunath Rao
Supervisory Patent Examiner &
POC for TC 1600 Green Tech Petitions
Technology Center 1600

UNITED STATES PATENT AND TRADEMARK OFFICE

UNITED STATES DEPARTMENT OF COMMERCE
United States Patent and Trademark Office
Address: COMMISSIONER FOR PATENTS
P.O. Box 1450
Alexandria, Virginia 22313-1450
www.uspto.gov

APPLICATION NO.	FILING DATE	FIRST NAMED INVENTOR	ATTORNEY DOCKET NO.	CONFIRMATION NO.
13/166,619	06/22/2011	Jun-Ho JEON	2026-02	6308

52706 7590 08/03/2011
IPLA P.A.
3550 WILSHIRE BLVD.
17TH FLOOR
LOS ANGELES, CA 90010

EXAMINER
MCCOMMAS, BRENDAN N

ART UNIT	PAPER NUMBER
2625	

MAIL DATE	DELIVERY MODE
08/03/2011	PAPER

Please find below and/or attached an Office communication concerning this application or proceeding.

The time period for reply, if any, is set in the attached communication.

UNITED STATES PATENT AND TRADEMARK OFFICE

Commissioner for Patents
United States Patent and Trademark Office
P.O. Box 1450
Alexandria, VA 22313-1450
www.uspto.gov

IPLA P.A.
3550 WILSHIRE BLVD.
17TH FLOOR
LOS ANGELES CA 90010

In re Application of	**: DECISION ON REQUEST TO**
Jun-Ho JEON	**: PARTICIPATE IN THE PATENT**
Application No.: 13/166,619	**: PROSECUTION HIGHWAY**
Filed: 22 June 2011	**: PROGRAM AND PETITION**
Attorney Docket No.: 2026-02	**: TO MAKE SPECIAL UNDER**
For: PRINTING SYSTEM AND METHOD	**: 37 CFR 1.102(a)**

This is a decision on the request to participate in the Patent Prosecution Highway (PPH) program and the petition under 37 CFR 1.102(a), filed 12 July 2011, to make the above-identified application special.

The request and petition are **DISMISSED**.

Discussion

A grantable request to participate in the PPH program and petition to make special require:

1. The U.S. application is

    a. a Paris Convention application which either
        i. validly claims priority under 35 U.S.C. 119(a) and 37 CFR 1.55 to one or more applications filed in the KIPO, or
        ii. validly claims priority under 35 U.S.C. 119(a)/365(a) to a PCT application that contains no priority claims,

    or

    b. a national stage application under the PCT (an application which entered the national stage in the U.S. from a PCT international application after compliance with 35 U.S.C. 371), which PCT application
        i. validly claims priority under 35 U.S.C. 365(b) to an application filed in the KIPO, or
        ii. validly claims priority under 35 U.S.C. 365(b) to a PCT application that contains no priority claims, or
        iii. contains no priority claim,

    or

    c. a so-called bypass application filed under 35 U.S.C. 111(a) which validly claims benefit under 35 U.S.C. 120 to a PCT application, which PCT application

i. validly claims priority under 35 U.S.C. 365(b) to an application filed in the KIPO, or
ii. validly claims priority under 35 U.S.C. 365(b) to a PCT application that contains no priority claims, or
iii. contains no priority claim;

2. Applicant must submit a copy of:
   a. The allowable/patentable claim(s) from the KR application(s);
   b. An English translation of the allowable/patentable claim(s), and
   c. A statement that the English translation is accurate (if the claims were published in a language other than English);
3. Applicant must:
   a. Ensure that all the claims in the U.S. application must sufficiently correspond or be amended to sufficiently correspond to the allowable/patentable claim(s) in the KR application(s), and
   b. Submit a claims correspondence table in English;
4. Examination of the U.S. application has not begun;
5. Applicant must submit:
   a. A copy of all the office actions (which are relevant to patentability), excluding "Decision to Grant a Patent" from each of the KR application(s) containing the allowable/patentable claim(s);
   b. An English language translation of the KIPO office action; and
   c. A statement that the English translation is accurate (if the office actions are not in the English language);
6. Applicant must submit:
   a. An IDS listing the documents cited by the KIPO examiner in the KIPO office action (unless already filed in this application); and
   b. Copies of all the documents cited in the KIPO office action, except U.S. patents or U.S. patent application publications (unless already filed in this application);

This request to participate in the PPH program and petition is assessed as follows:

Requirements (1), (3-4), and (6) above is considered to have been met. However the request to participate in the PPH program fails to meet requirement (3).

Regarding requirement (3), applicant has failed to ensure that the claim in the U.S. application sufficiently corresponds to the allowable/patentable claim in the KR application. US claim 1 contains limitations which are not present in KIPO claim 1 and therefore does not sufficiently correspond. The PPH agreement with KIPO does not allow for claims of narrower scope to be presented in the US application.

Applicant is given <u>ONE</u> opportunity within a time period of **ONE MONTH or THIRTY DAYS**, whichever is longer, from the mailing date of this decision to correct the deficiencies. **NO EXTENSION OF TIME UNDER 37 CFR 1.136 IS PERMITTED.** If the deficiencies are not corrected with the time period given, the application will await action in its regular turn.

Response must be filed via the Electronic Filing System (EFS) using the document description: Petition to make special under Patent Pros Hwy. Any preliminary amendments and IDS submitted with the PPH documents must be separately indexed as a preliminary amendment and IDS, respectively.

Telephone inquiries concerning this decision should be directed to Lee W. Young at (571) 272-4549.

All other inquiries concerning the examination or status of the application is accessible in the PAIR system at http://www.uspto.gov/ebc.index.html.

Lee W. Young
TQAS
Technology Center 2600

UNITED STATES PATENT AND TRADEMARK OFFICE

UNITED STATES DEPARTMENT OF COMMERCE
United States Patent and Trademark Office
Address: COMMISSIONER FOR PATENTS
P.O. Box 1450
Alexandria, Virginia 22313-1450
www.uspto.gov

APPLICATION NO.	FILING DATE	FIRST NAMED INVENTOR	ATTORNEY DOCKET NO.	CONFIRMATION NO.
13/166,619	06/22/2011	Jun-Ho JEON	2026-02	6308

52706 7590 09/13/2011
IPLA P.A.
3550 WILSHIRE BLVD.
17TH FLOOR
LOS ANGELES, CA 90010

EXAMINER
MCCOMMAS, BRENDAN N

ART UNIT	PAPER NUMBER
2625	

MAIL DATE	DELIVERY MODE
09/13/2011	PAPER

Please find below and/or attached an Office communication concerning this application or proceeding.

The time period for reply, if any, is set in the attached communication.

UNITED STATES PATENT AND TRADEMARK OFFICE

Commissioner for Patents
United States Patent and Trademark Office
P.O. Box 1450
Alexandria, VA 22313-1450
www.uspto.gov

IPLA P.A.
3550 WILSHIRE BLVD.
17TH FLOOR
LOS ANGELES CA 90010

In re Application of	**: DECISION ON REQUEST TO**
Jun-Ho JEON	**: PARTICIPATE IN THE PATENT**
Application No.: 13/166,619	**: PROSECUTION HIGHWAY**
Filed: 22 June 2011	**: PROGRAM AND PETITION**
Attorney Docket No.: 2026-02	**: TO MAKE SPECIAL UNDER**
For: PRINTING SYSTEM AND METHOD	**: 37 CFR 1.102(a)**

This is a decision on the request to participate in the Patent Prosecution Highway (PPH) program and the petition under 37 CFR 1.102(a), filed 12 July 2011 and renewed on 31 August 2011, to make the above-identified application special.

The request and petition are **GRANTED**.

Discussion

A grantable request to participate in the PPH program and petition to make special require:

1. The U.S. application is

    a. a Paris Convention application which either
        i. validly claims priority under 35 U.S.C. 119(a) and 37 CFR 1.55 to one or more applications filed in the KIPO, or
        ii. validly claims priority under 35 U.S.C. 119(a)/365(a) to a PCT application that contains no priority claims,

    or

    b. a national stage application under the PCT (an application which entered the national stage in the U.S. from a PCT international application after compliance with 35 U.S.C. 371), which PCT application
        i. validly claims priority under 35 U.S.C. 365(b) to an application filed in the KIPO, or
        ii. validly claims priority under 35 U.S.C. 365(b) to a PCT application that contains no priority claims, or
        iii. contains no priority claim,

    or

    c. a so-called bypass application filed under 35 U.S.C. 111(a) which validly claims benefit under 35 U.S.C. 120 to a PCT application, which PCT application

i. validly claims priority under 35 U.S.C. 365(b) to an application filed in the KIPO, or
ii. validly claims priority under 35 U.S.C. 365(b) to a PCT application that contains no priority claims, or
iii. contains no priority claim;

2. Applicant must submit a copy of:
   a. The allowable/patentable claim(s) from the KR application(s);
   b. An English translation of the allowable/patentable claim(s), and
   c. A statement that the English translation is accurate (if the claims were published in a language other than English);
3. Applicant must:
   a. Ensure that all the claims in the U.S. application must sufficiently correspond or be amended to sufficiently correspond to the allowable/patentable claim(s) in the KR application(s), and
   b. Submit a claims correspondence table in English;
4. Examination of the U.S. application has not begun;
5. Applicant must submit:
   a. A copy of all the office actions (which are relevant to patentability), excluding "Decision to Grant a Patent" from each of the KR application(s) containing the allowable/patentable claim(s);
   b. An English language translation of the KIPO office action; and
   c. A statement that the English translation is accurate (if the office actions are not in the English language);
6. Applicant must submit:
   a. An IDS listing the documents cited by the KIPO examiner in the KIPO office action (unless already filed in this application); and
   b. Copies of all the documents cited in the KIPO office action, except U.S. patents or U.S. patent application publications (unless already filed in this application);

The request to participate in the PPH program and petition comply with the above requirements. Accordingly, the above-identified application has been accorded "special" status.

Telephone inquiries concerning this decision should be directed to Lee W. Young at 571-272-4549.

All other inquiries concerning the examination or status of the application is accessible in the PAIR system at http://uspto.gov/ebc/index.html.

Lee W. Young
TQAS
Technology Center 2600

Doc Code: PET.AUTO **Document Description: Petition automatically granted by EFS-Web**	PTO/SB/83 U.S. Patent and Trademark Office Department of Commerce

Electronic Petition Request	**REQUEST FOR WITHDRAWAL AS ATTORNEY OR AGENT AND CHANGE OF CORRESPONDENCE ADDRESS**
Application Number	13166623
Filing Date	22-Jun-2011
First Named Inventor	Mark Taber
Art Unit	3736
Examiner Name	
Attorney Docket Number	025681.0101D1US
Title	CATHETER APPARATUS AND METHODS FOR TREATING VASCULATURES

◉ Please withdraw me as attorney or agent for the above identified patent application and the practitioners of record associated with Customer Number: 32042

The reason(s) for this request are those described in 37 CFR:

10.40(b)(4)

10.40(c)(5)

Certifications

☒ I/We have given reasonable notice to the client, prior to the expiration of the response period, that the practitioner(s) intend to withdraw from employment

☒ I/We have delivered to the client or a duly authorized representative of the client all papers and property (including funds) to which the client is entitled

☒ I/We have notified the client of any responses that may be due and the time frame within which the client must respond

Change the correspondence address and direct all future correspondence to the first named inventor or assignee that has properly made itself of record pursuant to 37 CFR 3.71:

Name	Mark Taber
Address	11244 Hunters Pond Road
City	St. Louis
State	MO
Postal Code	63141

Country	US
I am authorized to sign on behalf of myself and all withdrawing practitioners.	
Signature	/Scott A. Chambers/
Name	Scott A Chambers
Registration Number	37573

UNITED STATES PATENT AND TRADEMARK OFFICE

Commissioner for Patents
United States Patent and Trademark Office
P.O. Box 1450
Alexandria, VA 22313-1450
www.uspto.gov

Decision Date : February 13, 2012

In re Application of :

Mark Taber

Application No : 13166623

Filed : 22-Jun-2011

Attorney Docket No : 025681.0101D1US

DECISION ON REQUEST TO WITHDRAW AS ATTORNEY/AGENTOF RECORD

This is an electronic decision on the Request to Withdraw as attorney or agent of record under 37 CFR § 1.36(b), filed February 13, 2012

The request is **APPROVED.**

The request was signed by Scott A Chambers (registration no. 37573) on behalf of all attorneys/agents associated with Customer Number 32042 . All attorneys/agents associated with Cusotmer Number 32042 have been withdrawn.

Since there are no remaining attorneys of record, all future communications from the Office will be directed to the first named inventor or assignee that has properly made itself of record pursuant to 37 CFR 3.71, with correspondence address:

Name	Mark Taber
Name2	
Address 1	11244 Hunters Pond Road
Address 2	
City	St. Louis
State	MO
Postal Code	63141
Country	US

As a reminder, requester is required to inform the first named inventor or assignee that has properly made itself of record pursuant to 37 CFR 3.71 of the electronically processed petition.

Telephone inquiries concerning this decision should be directed to the Patent Electronic Business Center (EBC) at 866-217-9197.

Office of Petitions

PTO/SB/20PCT-KR (06-10)
Approved for use through 01/31/2012. OMB 0651-0058
U.S. Patent and Trademark Office; U. S. DEPARTMENT OF COMMERCE
Under the Paperwork Reduction Act of 1995, no persons are required to respond to a collection of information unless it displays a valid OMB control number.

REQUEST FOR PARTICIPATION IN THE PATENT COOPERATION TREATY - PATENT PROSECUTION HIGHWAY (PCT-PPH) PILOT PROGRAM BETWEEN THE KOREAN INTELLECTUAL PROPERTY OFFICE (KIPO) AND THE USPTO

Application No:	13/166,779	Filing date:	June 22, 2011
First Named Inventor:	Todor Fay		
Title of the Invention:	SYSTEM AND METHOD FOR DISTRIBUTED MEDIA PERSONALIZATION		

THIS REQUEST FOR PARTICIPATION IN THE PCT-PPH PILOT PROGRAM ALONG WITH THE REQUIRED DOCUMENTS MUST BE SUBMITTED VIA EFS-WEB. INFORMATION REGARDING EFS-WEB IS AVAILABLE AT HTTP://WWW.USPTO.GOV/EBC/EFS_HELP.HTML

APPLICANT HEREBY REQUESTS PARTICIPATION IN THE PCT-PPH PROGRAM AND PETITIONS TO MAKE THE ABOVE-IDENTIFIED APPLICATION SPECIAL UNDER THE PCT-PPH PROGRAM.

The above-identified application is (1) a national stage entry of the corresponding PCT application, or (2) a national stage entry of another PCT application which claims priority to the corresponding PCT application, or (3) a national application that claims domestic/ foreign priority to the corresponding PCT application, or (4) a national application which forms the basis for the priority claim in the corresponding PCT application, or (5) a continuing application of a U.S. application that satisfies one of (1) to (4) above, or (6) a U.S. application that claims domestic benefit to a U.S. provisional application which forms the basis for the priority claim in the corresponding PCT application.

The corresponding PCT application number(s) is/are: PCT/US2011/041535

The international filing date of the corresponding PCT application(s) is/are: June 22, 2011

I. List of Required Documents:

a. **A copy of the latest international work product (WO/ISA, WO/IPEA, or IPER) in the above–identified corresponding PCT application(s)**

- [x] Is attached.
- [ ] Is not attached because the document is already in the U.S. application.

b. **A copy of all claims which were indicated as having novelty, inventive step and industrial applicability in the above-identified corresponding PCT application(s).**

- [x] Is attached.
- [ ] Is not attached because the document is already in the U.S. application.

c. **English translations of the documents in a. and b. above are attached (if the documents are not in the English language). A statement that the English translation is accurate is attached for the document in b. above.**

This collection of information is required by 35 U.S.C. 119, 37 CFR 1.55, and 37 CFR 1.102(d). The information is required to obtain or retain a benefit by the public, which is to file (and by the USPTO to process) an application. Confidentiality is governed by 35 U.S.C. 122 and 37 CFR 1.11 and 1.14. This collection is estimated to take 2 hours to complete, including gathering, preparing, and submitting the completed application form to the USPTO. Time will vary depending upon the individual case. Any comments on the amount of time you require to complete this form and/or suggestions for reducing this burden should be sent to the Chief Information Officer, U.S. Patent and Trademark Office, U.S. Department of Commerce, P.O. Box 1450, Alexandria, VA 22313-1450. DO NOT SEND FEES OR COMPLETED FORMS TO THIS ADDRESS.

Approved for use through 01/31/2012. OMB 0651-0058
U.S.Patent and Trademark Office; U.S. DEPARTMENT OF COMMERCE
Under the Paperwork Reduction Act of 1995, no persons are required to respond to a collection of information unless it displays a valid OMB control number.

REQUEST FOR PARTICIPATION IN THE PCT-PPH PILOT PROGRAM BETWEEN THE KIPO AND THE USPTO

(continued)

Application No.:	13/166,779
First Named Inventor:	Todor Fay

d. **(1) An information disclosure statement listing the documents cited in the international work products (ISR, WO/ISA, WO/IPEA, IPER) of the corresponding PCT application.**

☑ Is attached

☐ Has already been filed in the above-identified U.S. application on _____

(2) Copies of all documents (except) for U.S. patents or U.S. patent application publications)

☑ Are attached.

☐ Have already been filed in the above-identified U.S. application on _____

II. Claims Correspondence Table:

Claims in US Application	Patentable Claims in the corresponding PCT Application	Explanation regarding the correspondence
1-50	1-50	identical

III. All the claims in the US application sufficiently correspond to the patentable claims in the corresponding PCT application.

Signature /Jonathan D. Cheng/	Date February 17, 2012
Name (Print/Typed) Jonathan D. Cheng	Registration Number 67912

Privacy Act Statement

The **Privacy Act of 1974 (P.L. 93-579)** requires that you be given certain information in connection with your submission of the attached form related to a patent application or patent. Accordingly, pursuant to the requirements of the Act, please be advised that: (1) the general authority for the collection of this information is 35 U.S.C. 2(b)(2); (2) furnishing of the information solicited is voluntary; and (3) the principal purpose for which the information is used by the U.S. Patent and Trademark Office is to process and/or examine your submission related to a patent application or patent. If you do not furnish the requested information, the U.S. Patent and Trademark Office may not be able to process and/or examine your submission, which may result in termination of proceedings or abandonment of the application or expiration of the patent.

The information provided by you in this form will be subject to the following routine uses:

1. The information on this form will be treated confidentially to the extent allowed under the Freedom of Information Act (5 U.S.C. 552) and the Privacy Act (5 U.S.C 552a). Records from this system of records may be disclosed to the Department of Justice to determine whether disclosure of these records is required by the Freedom of Information Act.
2. A record from this system of records may be disclosed, as a routine use, in the course of presenting evidence to a court, magistrate, or administrative tribunal, including disclosures to opposing counsel in the course of settlement negotiations.
3. A record in this system of records may be disclosed, as a routine use, to a Member of Congress submitting a request involving an individual, to whom the record pertains, when the individual has requested assistance from the Member with respect to the subject matter of the record.
4. A record in this system of records may be disclosed, as a routine use, to a contractor of the Agency having need for the information in order to perform a contract. Recipients of information shall be required to comply with the requirements of the Privacy Act of 1974, as amended, pursuant to 5 U.S.C. 552a(m).
5. A record related to an International Application filed under the Patent Cooperation Treaty in this system of records may be disclosed, as a routine use, to the International Bureau of the World Intellectual Property Organization, pursuant to the Patent Cooperation Treaty.
6. A record in this system of records may be disclosed, as a routine use, to another federal agency for purposes of National Security review (35 U.S.C. 181) and for review pursuant to the Atomic Energy Act (42 U.S.C. 218(c)).
7. A record from this system of records may be disclosed, as a routine use, to the Administrator, General Services, or his/her designee, during an inspection of records conducted by GSA as part of that agency's responsibility to recommend improvements in records management practices and programs, under authority of 44 U.S.C. 2904 and 2906. Such disclosure shall be made in accordance with the GSA regulations governing inspection of records for this purpose, and any other relevant (*i.e.*, GSA or Commerce) directive. Such disclosure shall not be used to make determinations about individuals.
8. A record from this system of records may be disclosed, as a routine use, to the public after either publication of the application pursuant to 35 U.S.C. 122(b) or issuance of a patent pursuant to 35 U.S.C. 151. Further, a record may be disclosed, subject to the limitations of 37 CFR 1.14, as a routine use, to the public if the record was filed in an application which became abandoned or in which the proceedings were terminated and which application is referenced by either a published application, an application open to public inspection or an issued patent.
9. A record from this system of records may be disclosed, as a routine use, to a Federal, State, or local law enforcement agency, if the USPTO becomes aware of a violation or potential violation of law or regulation.

PTO/SB/20PCT-KR (06-10)
Approved for use through 01/31/2012. OMB 0651-0058
U.S. Patent and Trademark Office; U. S. DEPARTMENT OF COMMERCE
Under the Paperwork Reduction Act of 1995, no persons are required to respond to a collection of information unless it displays a valid OMB control number.

REQUEST FOR PARTICIPATION IN THE PATENT COOPERATION TREATY - PATENT PROSECUTION HIGHWAY (PCT-PPH) PILOT PROGRAM BETWEEN THE KOREAN INTELLECTUAL PROPERTY OFFICE (KIPO) AND THE USPTO

Application No:	13/166,785	Filing date:	June 22, 2011
First Named Inventor:	Todor Fay		
Title of the Invention:	SYSTEM AND METHOD FOR DISTRIBUTED MEDIA PERSONALIZATION		

THIS REQUEST FOR PARTICIPATION IN THE PCT-PPH PILOT PROGRAM ALONG WITH THE REQUIRED DOCUMENTS MUST BE SUBMITTED VIA EFS-WEB. INFORMATION REGARDING EFS-WEB IS AVAILABLE AT HTTP://WWW.USPTO.GOV/EBC/EFS_HELP.HTML

APPLICANT HEREBY REQUESTS PARTICIPATION IN THE PCT-PPH PROGRAM AND PETITIONS TO MAKE THE ABOVE-IDENTIFIED APPLICATION SPECIAL UNDER THE PCT-PPH PROGRAM.

The above-identified application is (1) a national stage entry of the corresponding PCT application, or (2) a national stage entry of another PCT application which claims priority to the corresponding PCT application, or (3) a national application that claims domestic/ foreign priority to the corresponding PCT application, or (4) a national application which forms the basis for the priority claim in the corresponding PCT application, or (5) a continuing application of a U.S. application that satisfies one of (1) to (4) above, or (6) a U.S. application that claims domestic benefit to a U.S. provisional application which forms the basis for the priority claim in the corresponding PCT application.

The corresponding PCT application number(s) is/are: PCT/US2011/041535

The international filing date of the corresponding PCT application(s) is/are: June 22, 2011

I. List of Required Documents:

a. **A copy of the latest international work product (WO/ISA, WO/IPEA, or IPER) in the above–identified corresponding PCT application(s)**

- [x] Is attached.
- [ ] Is not attached because the document is already in the U.S. application.

b. **A copy of all claims which were indicated as having novelty, inventive step and industrial applicability in the above-identified corresponding PCT application(s).**

- [x] Is attached.
- [ ] Is not attached because the document is already in the U.S. application.

c. **English translations of the documents in a. and b. above are attached (if the documents are not in the English language). A statement that the English translation is accurate is attached for the document in b. above.**

This collection of information is required by 35 U.S.C. 119, 37 CFR 1.55, and 37 CFR 1.102(d). The information is required to obtain or retain a benefit by the public, which is to file (and by the USPTO to process) an application. Confidentiality is governed by 35 U.S.C. 122 and 37 CFR 1.11 and 1.14. This collection is estimated to take 2 hours to complete, including gathering, preparing, and submitting the completed application form to the USPTO. Time will vary depending upon the individual case. Any comments on the amount of time you require to complete this form and/or suggestions for reducing this burden should be sent to the Chief Information Officer, U.S. Patent and Trademark Office, U.S. Department of Commerce, P.O. Box 1450, Alexandria, VA 22313-1450. DO NOT SEND FEES OR COMPLETED FORMS TO THIS ADDRESS.

Approved for use through 01/31/2012. OMB 0651-0058
U.S.Patent and Trademark Office; U.S. DEPARTMENT OF COMMERCE
Under the Paperwork Reduction Act of 1995, no persons are required to respond to a collection of information unless it displays a valid OMB control number.

REQUEST FOR PARTICIPATION IN THE PCT-PPH PILOT PROGRAM BETWEEN THE KIPO AND THE USPTO

(continued)

Application No.:	13/166,785
First Named Inventor:	Todor Fay

d. **(1) An information disclosure statement listing the documents cited in the international work products (ISR, WO/ISA, WO/IPEA, IPER) of the corresponding PCT application.**

- [✔] Is attached
- [ ] Has already been filed in the above-identified U.S. application on _____

(2) Copies of all documents (except) for U.S. patents or U.S. patent application publications)

- [✔] Are attached.
- [ ] Have already been filed in the above-identified U.S. application on _____

II. Claims Correspondence Table:

Claims in US Application	Patentable Claims in the corresponding PCT Application	Explanation regarding the correspondence
1-20	78-97	identical except for renumbering of claims and dependencies

III. All the claims in the US application sufficiently correspond to the patentable claims in the corresponding PCT application.

Signature /Jonathan D. Cheng/	Date February 17, 2012
Name (Print/Typed) Jonathan D. Cheng	Registration Number 67912

Privacy Act Statement

The **Privacy Act of 1974 (P.L. 93-579)** requires that you be given certain information in connection with your submission of the attached form related to a patent application or patent. Accordingly, pursuant to the requirements of the Act, please be advised that: (1) the general authority for the collection of this information is 35 U.S.C. 2(b)(2); (2) furnishing of the information solicited is voluntary; and (3) the principal purpose for which the information is used by the U.S. Patent and Trademark Office is to process and/or examine your submission related to a patent application or patent. If you do not furnish the requested information, the U.S. Patent and Trademark Office may not be able to process and/or examine your submission, which may result in termination of proceedings or abandonment of the application or expiration of the patent.

The information provided by you in this form will be subject to the following routine uses:

1. The information on this form will be treated confidentially to the extent allowed under the Freedom of Information Act (5 U.S.C. 552) and the Privacy Act (5 U.S.C 552a). Records from this system of records may be disclosed to the Department of Justice to determine whether disclosure of these records is required by the Freedom of Information Act.
2. A record from this system of records may be disclosed, as a routine use, in the course of presenting evidence to a court, magistrate, or administrative tribunal, including disclosures to opposing counsel in the course of settlement negotiations.
3. A record in this system of records may be disclosed, as a routine use, to a Member of Congress submitting a request involving an individual, to whom the record pertains, when the individual has requested assistance from the Member with respect to the subject matter of the record.
4. A record in this system of records may be disclosed, as a routine use, to a contractor of the Agency having need for the information in order to perform a contract. Recipients of information shall be required to comply with the requirements of the Privacy Act of 1974, as amended, pursuant to 5 U.S.C. 552a(m).
5. A record related to an International Application filed under the Patent Cooperation Treaty in this system of records may be disclosed, as a routine use, to the International Bureau of the World Intellectual Property Organization, pursuant to the Patent Cooperation Treaty.
6. A record in this system of records may be disclosed, as a routine use, to another federal agency for purposes of National Security review (35 U.S.C. 181) and for review pursuant to the Atomic Energy Act (42 U.S.C. 218(c)).
7. A record from this system of records may be disclosed, as a routine use, to the Administrator, General Services, or his/her designee, during an inspection of records conducted by GSA as part of that agency's responsibility to recommend improvements in records management practices and programs, under authority of 44 U.S.C. 2904 and 2906. Such disclosure shall be made in accordance with the GSA regulations governing inspection of records for this purpose, and any other relevant (*i.e.*, GSA or Commerce) directive. Such disclosure shall not be used to make determinations about individuals.
8. A record from this system of records may be disclosed, as a routine use, to the public after either publication of the application pursuant to 35 U.S.C. 122(b) or issuance of a patent pursuant to 35 U.S.C. 151. Further, a record may be disclosed, subject to the limitations of 37 CFR 1.14, as a routine use, to the public if the record was filed in an application which became abandoned or in which the proceedings were terminated and which application is referenced by either a published application, an application open to public inspection or an issued patent.
9. A record from this system of records may be disclosed, as a routine use, to a Federal, State, or local law enforcement agency, if the USPTO becomes aware of a violation or potential violation of law or regulation.

UNITED STATES PATENT AND TRADEMARK OFFICE

Commissioner for Patents
United States Patent and Trademark Office
P.O. Box 1450
Alexandria, VA 22313-1450
www.uspto.gov

SEP 2 0 2011

CARR & FERRELL LLP
120 CONSTITUTION DRIVE
MENLO PARK CA 94025

In re Application of: Ingrid Carney Application No.: 13/166789 Filed: June 22, 2011 Title: MATERNITY GARMENT	DECISION ON PETITION TO MAKE SPECIAL FOR NEW APPLICATION UNDER 37 C.F.R. § 1.102 & M.P.E.P. § 708.02

This is a decision on the petition filed on June 22, 2011 to make the above-identified application special for accelerated examination procedure under 37 C.F.R. § 1.102(d).

The petition to make the application special is **DISMISSED**.

REGULATION AND PRACTICE

A grantable petition to make special under 37 C.F.R. § 1.102(d) and pursuant to the "Change to Practice for Petitions in Patent Applications to Make Special and for Accelerated Examination" published in the Federal Register on June 26, 2006 (71 Fed. Reg. 36323), must satisfy the following conditions:

I. Conditions Regarding the Application:

1. the application must be a non-reissue utility or design application filed under 37 CFR 1.111(a);
2. the application, the petition and the required fees must be filed electronically using the USPTO's electronic filing system (EFS), or EFS-web; if not filed electronically, a statement asserting that EFS and EFS-web were not available during the normal business hours.
3. at the time of filing, the application must be complete under 37 CFR 1.51 and in condition for examination;
4. the application must contain three or fewer independent claims and twenty or fewer total claims and the claims must be directed to a single invention.

II. Conditions Regarding the Petition:

The petition must:

1. be filed with the application;
2. include a statement that applicant agrees not to separately argue the patentability of any independent claim during any appeal in the application;
3. include a statement that applicant agrees to make an election without traverse in a telephone interview.

4. include a statement that applicant agrees to conduct such an interview when requested by the examiner.

5. include a statement, made based on a good faith belief, that a preexamination search in compliance with the following requirements, was conducted, including an identification of the field of search by United States class and subclass, where applicable, and for database searches, the search logic or chemical structure or sequence used as a query, the name of the file(s) searched and the database service, and the date of the search.

The preexamination search must:

5.1 involve U.S. patents and patent application publications, foreign patent documents, and non-patent literature, unless the applicant can justify with reasonable certainty that no references more pertinent than those already identified are likely to be found in the eliminated sources and includes such a justification with this statement;

5.2. be directed to the claimed invention and encompass all of the features of the claims, giving the claims the broadest reasonable interpretation;

5.3. encompass the disclosed features that may be claimed.

6. must provide in support of the petition an accelerated examination support document. An accelerated examination support document must include:

6.1. an information disclosure statement (IDS) in compliance with 37 CFR 1.98 citing each reference deemed most closely related to the subject matter of each of the claims;

6.2. an identification of all the limitations in the claims that are disclosed by the reference specifying where the limitation is disclosed in the cited reference;

6.3. a detailed explanation of how each of the claims are patentable over the references cited with particularity required by 37 CFR 1.111(b) and (c);

6.4. a concise statement of the utility of the invention as defined in each of the independent claims (unless the application is a design application);

6.5. a showing of where each limitation of the claims finds support under 35 U.S.C. 112, first paragraph, in the written description of the specification. If applicable, the showing must also identify: (1) each means- (or step) plus-function claim element that invokes consideration under 35 U.S.C. 112, sixth paragraph; and (2) the structure, material, or acts in the specification that corresponds to each means- (or step) plus-function claim element that invokes consideration under 35 U.S.C. 112, sixth paragraph; if the application claims the benefit of one or more applications under title 35, United States Code, the showing must also include where each limitation of the claims finds support under 35 U.S.C. 112, first paragraph, in each such application in which such supports exists;

6.6. an identification of any cited references that may be disqualified under 35 U.S.C. 103(c).

REVIEW OF FACTS

The conditions I:1-4, II: 1-5, 5.3, 6, 6.1, 6.2, 6.4, and 6.6 above are considered to have been met. However, the petition fails to comply with conditions II : 5.1, 5.2, 6.3, and 6.5 above. Therefore, the petition fails to meet the required conditions to be accorded special status under the accelerated examination procedure.

Discussion

When referring to "the petition" hereinbelow, the received papers under consideration include the PTO/SB/28 form, the "pre-examination search document" including pages ***; the "accelerated examination support document" comprising pages ***, and an Information Disclosure Statement including form PTO/SB/08A.

Regarding the requirements of section II element 5.1 and 5.2 outlined above, it appears the search outlined in the petition omitted a critical search area by not searching in class 2 subclasses 244 and 207; class 450 subclasses 18, 23, 80, 85, and 155; and class 602 subclasses 44 and 63.

With respect to the requirements of section II element 6.3 outlined above, the petition fails to provide a detailed explanation of how each of the claims are patentable over (each of) the reference(s) with particularity required by 37 CFR 1.111(b) and (c). Petitioners should be specific in their explanation and include the identification of specific claim limitations that support their position, where appropriate. Petitioners must distinguish each claim from each piece of prior art cited. General statements that the claims are neither anticipated nor rendered obvious by the cited references or that the references are not properly combinable will not be acceptable. The Office cannot infer or guess what petitioner believes the differences between the claims and the teachings of the prior art to be. Petitioner's statements must also be consistent and must be related to the claim language. In the instant petition, petitioner has only made a general statement to obviousness and has not pointed out what limitations distinguish the prior art when the references are considered in combination. Additionally, since some percentages of certain spandex material are indicated as being known, an explanation of how other percentages are not obvious over the known percentages is required. Also, there are other specific dimensions claimed where the device is known, see for example claim 9. An explanation of how these specific dimensions provide patently must be provided.
A statement that the dependent claims are allowable because the independent claims are patentable is not sufficient. This does not provide guidance to the examiner as to whether the limitations could provide patentability should the examiner find the independent claims unpatentable.

Regarding the requirements of section II element 6.5 outlined above, the requirements of this section are not met. A grantable petition requires petitioner to provide a showing of where <u>each limitation</u> of the claims finds support under 35 U.S.C. 112, first paragraph, in the written description of the specification. If applicable, the showing must also identify: (1) each means- (or step) plus-function claim element that invokes consideration under 35 U.S.C. 112, sixth paragraph; and (2) the structure, material, or acts in the specification that corresponds to each means- (or step) plus-function claim element that invokes consideration under 35 U.S.C. 112, sixth paragraph; if the application claims the benefit of one or more applications under title 35, United States Code, the showing must also include where each limitation of the claims finds support under 35 U.S.C. 112, first paragraph, in each such application in which such supports exists. In the instant petition, a showing of support for all claim limitations have not been provided as some of the boxes have been left blank. It is not clear whether support for these limitations are not found or whether the box was left blank by mistake.

DECISION

For the above-stated reasons, the petition is **dismissed**. The application will therefore be taken up by the examiner for action in its regular turn.

Petitioner is given a single opportunity to perfect the petition. Any request for reconsideration of this decision must be submitted within 1 (one) month or 30 (thirty) days, whichever is longer, (no extension of time under 37 CFR 1.136(a)) from the date of this decision in order to be considered timely. Any request for reconsideration must address all of the deficiencies indicated above.

Petitioner is reminded that, upon granting of the special status of the application on request for reconsideration, the application will be processed expeditiously. However, due to the dismissal of the instant petition, examination may not be completed within twelve months of the filing date of the application.

Any inquiry regarding this decision should be directed to Linda J. Sholl, TC 3700 Special Programs Examiner, at (571) 272-4391.

/Linda J. Sholl/
Linda J. Sholl
Special Programs Examiner
Technology Center 3700

UNITED STATES PATENT AND TRADEMARK OFFICE

Commissioner for Patents
United States Patent and Trademark Office
P.O. Box 1450
Alexandria, VA 22313-1450
www.uspto.gov

NOV 01 2011

CARR & FERRELL LLP
120 CONSTITUTION DRIVE
MENLO PARK CA 94025

In re Application of: Ingrid Carney Application No.: 13/166789 Filed: June 22, 2011 Title: MATERNITY GARMENT	DECISION ON PETITION TO MAKE SPECIAL FOR NEW APPLICATION UNDER 37 C.F.R. § 1.102 & M.P.E.P. § 708.02

This is a decision on the renewed petition filed on October 20, 2011 to make the above-identified application special for accelerated examination procedure under 37 C.F.R. § 1.102(d).

The petition to make the application special is GRANTED.

The petition has been granted treating the lack of support showing as an indication that no support is found in the priority applications not discussed relative to a claim limitation.

The application is eligible for accelerated examination and the petition complies with the conditions for granting the application special status pursuant to the "Change to Practice for Petitions in Patent Applications to Make Special and for Accelerated Examination" published June 26, 2006, in the Federal Register. (71 Fed. Reg. 36323).

The prosecution of the instant application will be conducted expeditiously according to the following guidelines.

1. The application will be docketed to an examiner and taken up for action within two weeks of the date of this decision.

2. Restriction Practice:
   If the examiner determines that the claims are not directed to a single invention, a telephone request to elect one single invention will be made pursuant to MPEP 812.01. As a prerequisite to the grant of this petition, the applicant has agreed to make an oral election, by telephone, without traverse. If the applicant refuses to make an election without traverse, or the examiner cannot reach the applicant after a reasonable effort, the examiner will treat the first claimed invention (invention defined by claim 1) as having being constructively elected without traverse for examination.

3. Office action:
   If it is determined that, after appropriate consultation, there is a potential rejection or any other issue to be addressed, the examiner will telephone the applicant and arrange an interview to discuss and resolve the issue. An Office action, other than a Notice of Allowance and Fee(s) Due (Notice of Allowance), will not be issued unless either: 1) an interview was conducted but did not result in agreed to action that places the application in condition for allowance, or, 2) a determination is made that an interview would be unlikely to result in the application being placed in condition for allowance, and 3) an internal conference has been held to review any rejection of any claim.

4. Time for Reply:
   An Office action other than a Notice of Allowance or a final Office action will set a shortened statutory period of one month or thirty days, whichever is longer, for reply with no extension of time available under 37 CFR 1.136(a). Failure to timely file a reply within this non-extendible period for reply will result in the abandonment of the application.

5. Reply by Applicant:
   A timely reply to an Office action other than the Notice of Allowance must be submitted electronically via EFS or EFS-web and limited to addressing the rejections, objections and requirement made. Any amendment that attempts to: 1) add claims which would result in more than three pending independent claims or more than twenty pending total claims; 2) present claims not encompassed by the pre-examination search or an updated accelerated examination support document; or 3) present claims that are directed a non-elected invention or an invention other than that previously claimed and examined in the application, will be treated as not fully responsive and will not be entered.

   For any amendment to the claims (including any new claim) that is not encompassed by the accelerated examination support document, applicant must provide an updated accelerated examination support document that encompasses the amended or new claims at the time of filing of the amendment.

   To proceed expeditiously with the examination, it is recommended that a reply with amendments made to any claim or with any new claim being added be accompanied by an updated accelerated examination support document or a statement explaining how the amended or new claim is supported by the original accelerated examination support document.

6. Information Disclosure Statement (IDS):
   Any IDS filed during prosecution must be submitted electronically via EFS or EFS-web, accompanied by an updated accelerated examination support document, and be in compliance with 37 CFR 1.97 and 1.98.

7. Post-Allowance Processing:
   To expedite processing of the allowed application into a patent, the applicant must: 1) pay the required fees within one month of the date of the Notice of Allowance, and 2) not file any post allowance papers not required by the Office. In no event may the issue fee be paid and accepted later than three months from the date of the Notice of Allowance.

8. After-Final and Appeal Procedures:
   To expedite prosecution, after receiving the final Office action, applicant must: 1) promptly file a notice of appeal, an appeal brief and appeal fees; and 2) not request a pre-appeal brief conference.

   Any amendment, affidavit or other evidence filed after final Office action must comply with applicable rules and the requirements outlined in numbered paragraphs 5 and 6 above.

   On appeal, the application will proceed according to normal appeal procedures. After appeal, the application will again be treated special.

9. Proceedings Outside the Normal Examination Process:
   If the application becomes involved in a proceeding that is outside the normal examination process (e.g., a secrecy order, national security review, interference proceeding, petitions under 37 CFR 1.181, 182 or 183), the application will be treated special before and after such proceeding.

10. Final Disposition:
    The twelve month goal of this accelerated examination procedure ends with a final disposition. The mailing of a final Office action, a Notice of Allowance, the filing of a Notice of Appeal, or the filing of a Request for Continued Examination (RCE) is the final disposition.

If, during prosecution, a paper is not filed electronically using EFS-web, a reply is filed but is not fully responsive, the application is involved in an appeal, or a proceeding outside normal examination process, the application will still be examined expeditiously, however, the final disposition may occur more than twelve months from the filing of the application.

Any inquiry regarding this decision should be directed to Linda Sholl at (571) 272-4391

/Linda Sholl/
Linda Sholl
Special Programs Examiner
Technology Center 3700

Doc code : PET.OP.AGE
Description : Petition to make special based on Age/Health

PTO/SB/130 (03-09)
Approved for use through 04/30/2009. OMB 0651- 0031
U.S. Patent and Trademark Office; U.S. DEPARTMENT OF COMMERCE
Under the Paperwork Reduction Act of 1995, no persons are required to respond to a collection of information unless it contains a valid OMB control number

PETITION TO MAKE SPECIAL BASED ON AGE FOR ADVANCEMENT OF EXAMINATION UNDER 37 CFR 1.102(c)(1)

Application Information

Application Number	13166804	Confirmation Number	6681	Filing Date	2011-06-22
Attorney Docket Number (optional)	AB1101	Art Unit		Examiner	
First Named Inventor	Arden L. Brey				
Title of Invention	METHOD AND SYSTEM FOR CONFINING AND SALVAGING OIL AND METHANE LEAKAGE FROM OFFSHORE LOCATIONS AND EXTRACTION OPERATIONS				

Attention: Office of Petitions
An application may be made special for advancement of examination upon filing of a petition showing that the applicant is 65 years of age, or more. No fee is required with such a petition. See 37 CFR 1.102(c)(1) and MPEP 708.02 (IV).

APPLICANT HEREBY PETITIONS TO MAKE SPECIAL FOR ADVANCEMENT OF EXAMINATION IN THIS APPLICATION UNDER 37 CFR 1.102(c)(1) and MPEP 708.02 (IV) ON THE BASIS OF THE APPLICANT'S AGE.

A grantable petition requires one of the following items:
(1) Statement by one named inventor in the application that he/she is 65 years of age, or more; or
(2) Certification by a registered attorney/agent having evidence such as a birth certificate, passport, driver's license, etc. showing one named inventor in the application is 65 years of age, or more.

Name of Inventor who is 65 years of age, or older

Given Name	Middle Name	Family Name	Suffix
Arden	L.	Brey	

A signature of the applicant or representative is required in accordance with 37 CFR 1.33 and 10.18.
Please see 37 CFR 1.4(d) for the format of the signature.

Select (1) or (2) :

○ (1) I am an inventor in this application and I am 65 years of age, or more.

● (2) I am an attorney or agent registered to practice before the Patent and Trademark Office, and I certify that I am in possession of evidence, and will retain such in the application file record, showing that the inventor listed above is 65 years of age, or more.

Signature	/Mark J. Young/	Date (YYYY-MM-DD)	2011-12-19
Name	Mark J. Young	Registration Number	39436

PTO/SB/130 (03-09)
Approved for use through 04/30/2009. OMB 0651- 0031
U.S. Patent and Trademark Office; U.S. DEPARTMENT OF COMMERCE
Under the Paperwork Reduction Act of 1995, no persons are required to respond to a collection of information unless it contains a valid OMB control number

Privacy Act Statement

The Privacy Act of 1974 (P.L. 93-579) requires that you be given certain information in connection with your submission of the attached form related to a patent application or patent. Accordingly, pursuant to the requirements of the Act, please be advised that: (1) the general authority for the collection of this information is 35 U.S.C. 2(b)(2); (2) furnishing of the information solicited is voluntary; and (3) the principal purpose for which the information is used by the U.S. Patent and Trademark Office is to process and/or examine your submission related to a patent application or patent. If you do not furnish the requested information, the U.S. Patent and Trademark Office may not be able to process and/or examine your submission, which may result in termination of proceedings or abandonment of the application or expiration of the patent.

The information provided by you in this form will be subject to the following routine uses:

1. The information on this form will be treated confidentially to the extent allowed under the Freedom of Information Act (5 U.S.C. 552) and the Privacy Act (5 U.S.C. 552a). Records from this system of records may be disclosed to the Department of Justice to determine whether the Fr eedom of Information Act requires disclosure of these records.

2. A record from this system of records may be disclosed, as a routine use, in the course of presenting evidence to a court, magistrate, or administrative tribunal, including disclosures to opposing counsel in the course of settlement negotiations.

3. A record in this system of records may be disclosed, as a routine use, to a Member of Congress submitting a request involving an individual, to whom the record pertains, when the individual has requested assistance from the Member with respect to the subject matter of the record.

4. A record in this system of records may be disclosed, as a routine use, to a contractor of the Agency having need for the information in order to perform a contract. Recipients of information shall be required to comply with the requirements of the Privacy Act of 1974, as amended, pursuant to 5 U.S.C. 552a(m).

5. A record related to an International Application filed under the Patent Cooperation Treaty in this system of records may be disclosed, as a routine use, to the International Bureau of the World Intellectual Property Organization, pursuant to the Patent Cooperation Treaty.

6. A record in this system of records may be disclosed, as a routine use, to another federal agency for purposes of National Security review (35 U.S.C. 181) and for review pursuant to the Atomic Energy Act (42 U.S.C. 218(c)).

7. A record from this system of records may be disclosed, as a routine use, to the Administrator, General Services, or his/her designee, during an inspection of records conducted by GSA as part of that agency's responsibility to recommend improvements in records management practices and programs, under authority of 44 U.S.C. 2904 and 2906. Such disclosure shall be made in accordance with the GSA regulations governing inspection of records for this purpose, and any other relevant (i.e., GSA or Commerce) directive. Such disclosure shall not be used to make determinations about indivi duals.

8. A record from this system of records may be disclosed, as a routine use, to the public after either publication of the application pursuant to 35 U.S.C. 122(b) or issuance of a patent pursuant to 35 U.S.C. 151. Further, a record may be disclosed, subject to the limitations of 37 CFR 1.14, as a routine use, to the public if the record was filed in an application which became abandoned or in which the proceedings were terminated and which application is referenced by either a published application, an application open to public inspections or an issued patent.

9. A record from this system of records may be disclosed, as a routine use, to a Federal, State, or local law enforcement agency, if the USPTO becomes aware of a violation or potential violation of law or regulation.

UNITED STATES PATENT AND TRADEMARK OFFICE

Commissioner for Patents
United States Patent and Trademark Office
P.O. Box 1450
Alexandria, VA 22313-1450
www.uspto.gov

In re Application of
Arden L. Brey

Application No. 13166804

Filed: June 22,2011

Attorney Docket No. AB1101

:DECISION ON PETITION TO MAKE SPECIAL
:UNDER 37 CFR 1.102(c)(1)

This is a decision on the electronic petition under 37 CFR 1.102 (c)(1), filed 19-DEC-2011 to make the above-identified application special based on applicant's age as set forth in MPEP § 708.02, Section IV.

The petition is **GRANTED**.

A grantable petition to make an application special under 37 CFR 1.102(c)(1), MPEP § 708.02, Section IV: Applicant's Age must include a statement by applicant or a registered practitioner having evidence that applicant is at least 65 years of age. No fee is required.

Accordingly, the above-identified application has been accorded "special" status and will be taken up for action by the examiner upon the completion of all pre-examination processing.

Telephone inquiries concerning this electronic decision should be directed to the Electronic Business Center at 866-217-9197.

All other inquiries concerning either the examination or status of the application should be directed to the Technology Center.

UNITED STATES PATENT AND TRADEMARK OFFICE

UNITED STATES DEPARTMENT OF COMMERCE
United States Patent and Trademark Office
Address: COMMISSIONER FOR PATENTS
P.O. Box 1450
Alexandria, Virginia 22313-1450
www.uspto.gov

APPLICATION NO.	FILING DATE	FIRST NAMED INVENTOR	ATTORNEY DOCKET NO.	CONFIRMATION NO.
13/166,893	06/23/2011	Hideo IGARASHI	2011_0900A	6862

513 7590 07/20/2011
WENDEROTH, LIND & PONACK, L.L.P.
1030 15th Street, N.W.,
Suite 400 East
Washington, DC 20005-1503

EXAMINER

ART UNIT	PAPER NUMBER
3728	

NOTIFICATION DATE	DELIVERY MODE
07/20/2011	ELECTRONIC

Please find below and/or attached an Office communication concerning this application or proceeding.

The time period for reply, if any, is set in the attached communication.

Notice of the Office communication was sent electronically on above-indicated "Notification Date" to the following e-mail address(es):

ddalecki@wenderoth.com
eoa@wenderoth.com

UNITED STATES PATENT AND TRADEMARK OFFICE

Commissioner for Patents
United States Patent and Trademark Office
P.O. Box 1450
Alexandria, VA 22313-1450
www.uspto.gov

WENDEROTH, LIND & PONACK, L.L.P.
1030 15th Street, N.W.,
Suite 400 East
Washington DC 20005-1503

In re Application of: IGARASHI, HIDEO Serial No.: 13/166893 Filed: June 23, 2011 Attorney Docket No. : 2011_0900A Title: PACKAGING BAG FOR SECONDARY PACKAGING CONFIGURED TO TRANSPORT INFECTIOUS SUBSTANCES	DECISION ON A REQUEST TO PARTICIPATE IN PCT/PATENT PROSECUTION HIGHWAY PROGRAM AND PETITION TO MAKE SPECIAL UNDER CFR 1.102(a)

This is a decision on the request to participate in the Patent Prosecution Highway (PPH) program and the petition under 37 CFR 1.102(a), filed July 12, 2011 to make the above-identified application special.

The request and petition are **granted.**

A grantable request to participate in the PPH pilot program and petition to make special require:

(1) The U.S. application must validly claim priority under 35 U.S.C. 119(a) to one or more corresponding application(s) filed in the JPO;
(2) Applicant must submit a copy of the allowable/patentable claim(s) from the JPO application(s) along with an English translation thereof and a statement that the English translation is accurate;
(3) All the claims in the U.S. application must sufficiently correspond or be amended to sufficiently correspond to the allowable/patentable claim(s) in the JPO application(s);
(4) Examination of the U.S. application has not begun;
(5) Applicant must submit a copy of all the office actions from each of the JPO application(s) containing the allowable/patentable claim(s) along with an English translation thereof and a statement that the English translation is accurate; and
(6) Applicant must submit IDS listing the documents cited by the JPO examiner in the JPO office action along with copies of documents except U.S. patents or U.S. patent application publications.

In light of the petition being properly submitted, the request to participate in the PPH program and the petition comply with the above requirements. Accordingly, the above-identified application has been accorded "special" status.

The applicant is encouraged to cite and submit all relevant prior art references, if any, to facilitate examination in this application.

Response must be filed via EFS-Web. Telephone inquiries concerning this decision should be directed to Henry C. Yuen, at 571-272-4856.

Petition is **granted**.

/Henry C. Yuen/

Henry C. Yuen
Special Programs Examiner
Technology Center 3700
Tel: 571-272-4856

Doc code : PET.OP.AGE
Description : Petition to make special based on Age/Health

PTO/SB/130 (07-09)
Approved for use through 07/31/2012. OMB 0651- 0031
U.S. Patent and Trademark Office; U.S. DEPARTMENT OF COMMERCE
Under the Paperwork Reduction Act of 1995, no persons are required to respond to a collection of information unless it contains a valid OMB control number

PETITION TO MAKE SPECIAL BASED ON AGE FOR ADVANCEMENT OF EXAMINATION UNDER 37 CFR 1.102(c)(1)

Application Information

Application Number	13166965	Confirmation Number	7018	Filing Date	2011-06-23
Attorney Docket Number (optional)	1001135-002	Art Unit		Examiner	
First Named Inventor	FUSON, Larry				
Title of Invention	DNA ENABLED CERTIFICATE				

Attention: Office of Petitions
An application may be made special for advancement of examination upon filing of a petition showing that the applicant is 65 years of age, or more. No fee is required with such a petition. See 37 CFR 1.102(c)(1) and MPEP 708.02 (IV).

APPLICANT HEREBY PETITIONS TO MAKE SPECIAL FOR ADVANCEMENT OF EXAMINATION IN THIS APPLICATION UNDER 37 CFR 1.102(c)(1) and MPEP 708.02 (IV) ON THE BASIS OF THE APPLICANT'S AGE.

A grantable petition requires one of the following items:
(1) Statement by one named inventor in the application that he/she is 65 years of age, or more; or
(2) Certification by a registered attorney/agent having evidence such as a birth certificate, passport, driver's license, etc. showing one named inventor in the application is 65 years of age, or more.

Name of Inventor who is 65 years of age, or older

Given Name	Middle Name	Family Name	Suffix
Larry		FUSON	

A signature of the applicant or representative is required in accordance with 37 CFR 1.33 and 10.18.
Please see 37 CFR 1.4(d) for the format of the signature.

Select (1) or (2) :

○ (1) I am an inventor in this application and I am 65 years of age, or more.

● (2) I am an attorney or agent registered to practice before the Patent and Trademark Office, and I certify that I am in possession of evidence, and will retain such in the application file record, showing that the inventor listed above is 65 years of age, or more.

Signature	/mark david torche/	Date (YYYY-MM-DD)	2011-06-23
Name	Mark David Torche	Registration Number	45823

PTO/SB/130 (07-09)
Approved for use through 07/31/2012. OMB 0651- 0031
U.S. Patent and Trademark Office; U.S. DEPARTMENT OF COMMERCE
Under the Paperwork Reduction Act of 1995, no persons are required to respond to a collection of information unless it contains a valid OMB control number

Privacy Act Statement

The Privacy Act of 1974 (P.L. 93-579) requires that you be given certain information in connection with your submission of the attached form related to a patent application or patent. Accordingly, pursuant to the requirements of the Act, please be advised that: (1) the general authority for the collection of this information is 35 U.S.C. 2(b)(2); (2) furnishing of the information solicited is voluntary; and (3) the principal purpose for which the information is used by the U.S. Patent and Trademark Office is to process and/or examine your submission related to a patent application or patent. If you do not furnish the requested information, the U.S. Patent and Trademark Office may not be able to process and/or examine your submission, which may result in termination of proceedings or abandonment of the application or expiration of the patent.

The information provided by you in this form will be subject to the following routine uses:

1. The information on this form will be treated confidentially to the extent allowed under the Freedom of Information Act (5 U.S.C. 552) and the Privacy Act (5 U.S.C. 552a). Records from this system of records may be disclosed to the Department of Justice to determine whether the Fr eedom of Information Act requires disclosure of these records.

2. A record from this system of records may be disclosed, as a routine use, in the course of presenting evidence to a court, magistrate, or administrative tribunal, including disclosures to opposing counsel in the course of settlement negotiations.

3. A record in this system of records may be disclosed, as a routine use, to a Member of Congress submitting a request involving an individual, to whom the record pertains, when the individual has requested assistance from the Member with respect to the subject matter of the record.

4. A record in this system of records may be disclosed, as a routine use, to a contractor of the Agency having need for the information in order to perform a contract. Recipients of information shall be required to comply with the requirements of the Privacy Act of 1974, as amended, pursuant to 5 U.S.C. 552a(m).

5. A record related to an International Application filed under the Patent Cooperation Treaty in this system of records may be disclosed, as a routine use, to the International Bureau of the World Intellectual Property Organization, pursuant to the Patent Cooperation Treaty.

6. A record in this system of records may be disclosed, as a routine use, to another federal agency for purposes of National Security review (35 U.S.C. 181) and for review pursuant to the Atomic Energy Act (42 U.S.C. 218(c)).

7. A record from this system of records may be disclosed, as a routine use, to the Administrator, General Services, or his/her designee, during an inspection of records conducted by GSA as part of that agency's responsibility to recommend improvements in records management practices and programs, under authority of 44 U.S.C. 2904 and 2906. Such disclosure shall be made in accordance with the GSA regulations governing inspection of records for this purpose, and any other relevant (i.e., GSA or Commerce) directive. Such disclosure shall not be used to make determinations about indivi duals.

8. A record from this system of records may be disclosed, as a routine use, to the public after either publication of the application pursuant to 35 U.S.C. 122(b) or issuance of a patent pursuant to 35 U.S.C. 151. Further, a record may be disclosed, subject to the limitations of 37 CFR 1.14, as a routine use, to the public if the record was filed in an application which became abandoned or in which the proceedings were terminated and which application is referenced by either a published application, an application open to public inspections or an issued patent.

9. A record from this system of records may be disclosed, as a routine use, to a Federal, State, or local law enforcement agency, if the USPTO becomes aware of a violation or potential violation of law or regulation.

UNITED STATES PATENT AND TRADEMARK OFFICE

Commissioner for Patents
United States Patent and Trademark Office
P.O. Box 1450
Alexandria, VA 22313-1450
www.uspto.gov

In re Application of
Larry FUSON

Application No. 13166965

Filed:

Attorney Docket No. 1001135-002

:DECISION ON PETITION TO MAKE SPECIAL
:UNDER 37 CFR 1.102(c)(1)

This is a decision on the electronic petition under 37 CFR 1.102 (c)(1), filed 23-JUN-2011 to make the above-identified application special based on applicant's age as set forth in MPEP § 708.02, Section IV.

The petition is **GRANTED**.

A grantable petition to make an application special under 37 CFR 1.102(c)(1), MPEP § 708.02, Section IV: Applicant's Age must include a statement by applicant or a registered practitioner having evidence that applicant is at least 65 years of age. No fee is required.

Accordingly, the above-identified application has been accorded "special" status and will be taken up for action by the examiner upon the completion of all pre-examination processing.

Telephone inquiries concerning this electronic decision should be directed to the Electronic Business Center at 866-217-9197.

All other inquiries concerning either the examination or status of the application should be directed to the Technology Center.

Doc Code: PET.GREEN
Document Description: Petition for Green Tech Pilot

PTO/SB/420 (03-11)

PETITION TO MAKE SPECIAL UNDER THE GREEN TECHNOLOGY PILOT PROGRAM

Attorney Docket Number: 2437	Application Number (if known): 13/166,990	Filing date: 6/23/2011

First Named Inventor: James M. Walters

Title: Energy Efficient Air Conditioning System

APPLICANT HEREBY REQUESTS TO PARTICIPATE IN THE GREEN TECHNOLOGY PILOT PROGRAM FOR THE ABOVE-IDENTIFIED APPLICATION. See Instruction Sheet on page 2.

This petition must be timely filed electronically using the USPTO electronic filing system, EFS-Web.

1. By filing this petition:

   Applicant is requesting early publication: Applicant hereby requests early publication under 37 CFR 1.219 and the publication fee set forth in 37 CFR 1.18(d) accompanies this request.

2. By filing this petition: applicant is agreeing to make an election without traverse in a telephonic interview and elect an invention that meets the eligibility requirements for the Green Technology Pilot Program, if the Office determines that the claims are not obviously directed to a single invention. See Instruction Sheet.

3. This request is accompanied by statements of special status for the eligibility requirement.

4. The application contains no more than three (3) independent claims and twenty (20) total claims.

5. The application does not contain any multiple dependent claims.

6. Other attachments: Pre-Amendment, Statements In Support of Petition and Rescission of Nonpub.

Signature /Donald J. Ersler/	Date 6/24/2011
Name (Print/Typed) Donald J. Ersler	Registration Number 38753

***Note**: Signatures of all the inventors or assignees of record of the entire interest or their representative(s) are required in accordance with 37 CFR 1.33 and 11.18. Please see 37 CFR 1.4(d) for the form of the signature. If necessary, submit multiple forms for more than one signature, see below*.*

☐ *Total of 1 forms are submitted.

If you need assistance in completing the form, call 1-800-PTO-9199 and select option 2.

UNITED STATES PATENT AND TRADEMARK OFFICE

UNITED STATES DEPARTMENT OF COMMERCE
United States Patent and Trademark Office
Address: COMMISSIONER FOR PATENTS
P.O. Box 1450
Alexandria, Virginia 22313-1450
www.uspto.gov

APPLICATION NO.	FILING DATE	FIRST NAMED INVENTOR	ATTORNEY DOCKET NO.	CONFIRMATION NO.
13/166,990	06/23/2011	James M. Walters	2437	7072

44649 7590 07/29/2011
DONALD J. ERSLER, S.C.
725 GARVENS AVENUE
BROOKFIELD, WI 53005

EXAMINER

ART UNIT	PAPER NUMBER
3744	

MAIL DATE	DELIVERY MODE
07/29/2011	PAPER

Please find below and/or attached an Office communication concerning this application or proceeding.

The time period for reply, if any, is set in the attached communication.

UNITED STATES PATENT AND TRADEMARK OFFICE

Commissioner for Patents
United States Patent and Trademark Office
P.O. Box 1450
Alexandria, VA 22313-1450
www.uspto.gov

DONALD J. ERSLER, S.C.
725 GARVENS AVENUE
BROOKFIELD WI 53005

In re Application of WALTERS, JAMES M. Application No. 13/166990 Filed: June 23, 2011 Attorney Docket No. 2437	: : : : :	DECISION ON PETITION TO MAKE SPECIAL UNDER THE GREEN TECHNOLOGY PILOT PROGRAM

This is a decision on the petition under 37 CFR 1.102, filed June 28, 2011 to make the above-identified application special under the pilot program for applications pertaining to Green Technologies as set forth in 74 Federal Register Notice 64666 (December 8, 2009) and amended by 75 Federal Register Notice 28554 (May 21, 2010) and 75 Federal Register Notice 69049 (November 10, 2010).

The petition is **granted**.

A grantable petition to make an application special under 37 CFR 1.102 and the pilot program as set forth in 74 FR 64666 must be directed to a nonprovisional application filed under 35 USC 111(a) or be a national stage entry under 35 USC 371, exclusive of any reissue applications.

If reconsideration of this decision is desired, a petition for reconsideration must be filed within ONE (1) MONTH OR THIRTY (30) DAYS from the mail date of this decision, whichever is longer. No extension of this time limit can be granted under 37 CFR 1.136(a) or (b). The petition for reconsideration should include an exhaustive attempt to provide the lacking item(s) noted below, since, after a decision on the petition for reconsideration, no further reconsideration or review of the matter will be undertaken by the Director.

In order to qualify for special status, the following requirements must be met. 1) The application must have no more than 3 independent claims and no more than 20 total claims. 2) The application must not contain any multiple dependent claims. 3) The petition must state the basis for seeking special status, i.e., the claimed invention either: A) materially enhances the quality of the environment or B) materially contributes to: i) the discovery or development of renewable energy resources, ii) the more efficient utilization and conservation of energy resources, or iii) greenhouse gas emission reduction. 4) If the disclosure is not clear on its face that the claimed invention materially contributes under category (A) or (B), the petition must be accompanied by

a statement by the applicant, assignee, or an attorney/agent registered to practice before the Office explaining how the materiality standard is met. 5) A statement that applicant will agree to make an election without traverse in a telephonic interview if a restriction requirement is made by the examiner. 6) The petition to make special must be filed electronically. 7) The petition must be filed at least one day prior to the date that a first Office Action appears in the Patent Application Information Retrieval (PAIR) system. 8) The petition must be accompanied by a request for early publication in compliance with 37 CFR 1.219 and include the publication fee as set forth in 37 CFR 1.18(d).

The requirement for a fee for consideration of the petition to make special for applications pertaining to Green Technologies has been waived.

The instant petition complies with items 1 – 8 above. Accordingly, the above-identified application has been accorded "special" status.

Telephone inquires concerning this decision should be directed to Henry C. Yuen at 571-272-4856.

This application will be forwarded to the Technology Center Art Unit 3744 for action on the merits commensurate with this decision.

/Henry C. Yuen/

Henry C. Yuen
Quality Assurance Specialist
Technology Center TC 3700

UNITED STATES PATENT AND TRADEMARK OFFICE

UNITED STATES DEPARTMENT OF COMMERCE
United States Patent and Trademark Office
Address: COMMISSIONER FOR PATENTS
P.O. Box 1450
Alexandria, Virginia 22313-1450
www.uspto.gov

APPLICATION NO.	FILING DATE	FIRST NAMED INVENTOR	ATTORNEY DOCKET NO.	CONFIRMATION NO.
13/167,026	06/23/2011	Mitsuaki OYA	OKUDP0526USA	7158

51921 7590 07/12/2011
MARK D. SARALINO (PAN)
RENNER, OTTO, BOISSELLE & SKLAR, LLP
1621 EUCLID AVENUE
19TH FLOOR
CLEVELAND, OH 44115

EXAMINER	
ART UNIT	PAPER NUMBER
2811	

MAIL DATE	DELIVERY MODE
07/12/2011	PAPER

Please find below and/or attached an Office communication concerning this application or proceeding.

The time period for reply, if any, is set in the attached communication.

UNITED STATES PATENT AND TRADEMARK OFFICE

Commissioner for Patents
United States Patent and Trademark Office
P.O. Box 1450
Alexandria, VA 22313-1450
www.uspto.gov

MARK D. SARALINO (PAN)
RENNER, OTTO, BOISSELLE & SKLAR, LLP
1621 EUCLID AVENUE
19TH FLOOR
CLEVELAND OH 44115

In re Application of
OYA et al.
Application No.: 13/167,026
Filed: 23 June 2011
Attorney Docket No.: OKUDP0526USA
For: NITRIDE-BASED SEMICONDUCTOR DEVICE AND METHOD FOR FABRICATING THE SAME

: DECISION ON REQUEST TO
: PARTICIPATE IN THE PATENT
: PROSECUTION HIGHWAY
: PROGRAM AND PETITION
: TO MAKE SPECIAL UNDER
: 37 CFR 1.102(a)

This is a decision on the request to participate in the Patent Prosecution Highway (PPH) program and the petition under 37 CFR 1.102(a), filed 24 June 2011, to make the above-identified application special.

The request and petition are **DISMISSED**.

A grantable request to participate in the PPH program and petition to make special require:

1. The U.S. application must validly claim priority under 35 U.S.C. 119(a) to one or more applications filed in the JPO, note where the JPO application with similar claims is not the same application from which the U.S. application claims priority then the applicant must identify the relationship between the JPO application with similar claims and the JPO priority application;

2. Applicant must submit a copy of:
   a. The allowable/patentable claim(s) from the JPO application(s) or if a copy of the allowable/patentable claims is available via the Dossier Access System (DAS) applicant may request the USPTO obtain a copy from the DAS, however if the USPTO is unable to obtain a copy from the DAS the applicant will be required to submit a copy;
   b. An English translation of the allowable/patentable claim(s) and
   c. A statement that the English translation is accurate;

3. Applicant must

a. Ensure all the claims in the U.S. application must sufficiently correspond or be amended to sufficiently correspond to the allowable/patentable claim(s) in the JPO application(s) and
b. Submit a claims correspondence table in English;

4. Examination of the U.S. application has not begun;

5. Applicant must submit:
   a. Documentation of prior office action:
      i. a copy of the office action(s) just prior to the "Decision to Grant a Patent" from each of the JPO application(s) containing the allowable/patentable claim(s) or
      ii. if the allowable/patentable claims(s) are from a "Notification of Reasons for Refusal" then the Notification of Reasons for Refusal or
      iii. if the JPO application is a first action allowance then no office action from the JPO is necessary should be indicated on the request/petition form;

      Further, if a copy of the documents from a or b above is available via the Dossier Access System (DAS) applicant may request the USPTO obtain a copy from the DAS, however if the USPTO is unable to obtain a copy from the DAS the applicant will be required to submit a copy;
   b. An English language translation of the JPO Office action from (5)(a)(i)-(ii) above
   c. A statement that the English translation is accurate (if the translation is not a machine translation provided by the JPO);

6. Applicant must submit:
   a. An IDS listing the documents cited by the JPO examiner in the JPO office action (unless already submitted in this application)
   b. Copies of the documents except U.S. patents or U.S. patent application publications (unless already submitted in this application);

Conditions (1-2) and (4-6) above are considered to have been met. However, the request to participate in the PPH pilot program and petition fails meet condition (3).

Regarding the requirement of condition (3), applicant has failed to ensure that all the claims in the U.S. application sufficiently correspond to the allowable/patentable claims in the JPO application. For example, US claim 1 requires a "p-type GaN-based semiconductor region" while JP claim 1 only requires a "p-type semiconductor region." US claim 1 is narrower in scope than JP claim 1. The PPH agreement with JPO allows for claims of narrower scope in the US application but the narrower claims must be presented in dependent form. It is applicant's responsibility to ensure that all the claims in the US application sufficiently correspond to the allowable/patentable claims in the JPO application.

Applicant is given <u>ONE</u> opportunity within a time period of **ONE MONTH or THIRTY DAYS**, whichever is longer, from the mailing date of this decision to correct the deficiencies. **NO EXTENSION OF TIME UNDER 37 CFR 1.136 IS PERMITTED.** If the deficiencies are not corrected with the time period given, the application will await action in its regular turn.

Response must be filed via the Electronic Filing System (EFS) using the document description: Petition to make special under Patent Pros Hwy. Any preliminary amendments and IDS submitted with the PPH documents must be separately indexed as a preliminary amendment and IDS, respectively.

Telephone inquiries concerning this decision should be directed to Lee W. Young at 571-272-4549.

All other inquiries concerning the examination or status of the application is accessible in the PAIR system at http://www.uspto.gov/ebc/index.html.

Lee W. Young
TQAS Technology Center 2800

UNITED STATES PATENT AND TRADEMARK OFFICE

UNITED STATES DEPARTMENT OF COMMERCE
United States Patent and Trademark Office
Address: COMMISSIONER FOR PATENTS
P.O. Box 1450
Alexandria, Virginia 22313-1450
www.uspto.gov

APPLICATION NO.	FILING DATE	FIRST NAMED INVENTOR	ATTORNEY DOCKET NO.	CONFIRMATION NO.
13/167,026	06/23/2011	Mitsuaki OYA	OKUDP0526USA	7158

51921 7590 10/11/2011
MARK D. SARALINO (PAN)
RENNER, OTTO, BOISSELLE & SKLAR, LLP
1621 EUCLID AVENUE
19TH FLOOR
CLEVELAND, OH 44115

EXAMINER

ART UNIT	PAPER NUMBER
2811	

MAIL DATE	DELIVERY MODE
10/11/2011	PAPER

Please find below and/or attached an Office communication concerning this application or proceeding.

The time period for reply, if any, is set in the attached communication.

UNITED STATES PATENT AND TRADEMARK OFFICE

Commissioner for Patents
United States Patent and Trademark Office
P.O. Box 1450
Alexandria, VA 22313-1450
www.uspto.gov

MARK D. SARALINO (PAN)
RENNER, OTTO, BOISSELLE & SKLAR, LLP
1621 EUCLID AVENUE
19TH FLOOR
CLEVELAND OH 44115

In re Application of
OYA et al.
Application No.: 13/167,026
Filed: 23 June 2011
Attorney Docket No.: OKUDP0526USA
For: NITRIDE-BASED SEMICONDUCTOR DEVICE AND METHOD FOR FABRICATING THE SAME

: DECISION ON REQUEST TO : PARTICIPATE IN THE PATENT : PROSECUTION HIGHWAY : PROGRAM AND PETITION : TO MAKE SPECIAL UNDER : 37 CFR 1.102(a)

This is a decision on the request to participate in the Patent Prosecution Highway (PPH) program and the petition under 37 CFR 1.102(a), filed 24 June 2011 and renewed 27 July 2011, to make the above-identified application special.

The request and petition are **GRANTED**.

Discussion

A grantable request to participate in the PPH pilot program and petition to make special require:

1. The U.S. application is
    a. a Paris Convention application which either
        i. validly claims priority under 35 U.S.C. 119(a) and 37 CFR 1.55 to one or more applications filed in the JPO, or
        ii. validly claims priority to a PCT application that contains no priority claims, or
    b. a national stage application under the PCT (an application which entered the national stage in the U.S. from a PCT international application after compliance with 35 U.S.C. 371), which PCT application
        i. validly claims priority to an application filed in the JPO, or
        ii. validly claims priority to a PCT application that contains no priority claims, or
        iii. contains no priority claim, or

c. a so-called bypass application filed under 35 U.S.C. 111(a) which validly claims benefit under 35 U.S.C. 120 to a PCT application, which PCT application
    i. validly claims priority to an application filed in the JPO, or
    ii. validly claims priority to a PCT application that contains no priority claims, or
    iii. contains no priority claim;

2. Applicant must submit a copy of:
    a. The allowable/patentable claim(s) from the JPO application(s);
    b. An English translation of the allowable/patentable claim(s) and
    c. A statement that the English translation is accurate;
3. Applicant must:
    a. Ensure all the claims in the U.S. application must sufficiently correspond or be amended to sufficiently correspond to the allowable/patentable claim(s) in the JPO application(s) and
    b. Submit a claims correspondence table in English;
4. Examination of the U.S. application has <u>not</u> begun;
5. Applicant must submit:
    a. Documentation of prior office action:
        i. a copy of the office action(s) just prior to the "Decision to Grant a Patent" from each of the JPO application(s) containing the allowable/patentable claim(s) or
        ii. if the allowable/patentable claims(s) are from a "Notification of Reasons for Refusal" then the Notification of Reasons for Refusal or
        iii. if the JPO application is a first action allowance then no office action from the JPO is necessary should be indicated on the request/petition form;
    b. An English language translation of the JPO Office action from (5)(a)(i)-(ii) above
    c. A statement that the English translation is accurate;
6. Applicant must submit:
    a. An IDS listing the documents cited by the JPO examiner in the JPO office action (unless already submitted in this application)
    b. Copies of the documents except U.S. patents or U.S. patent application publications (unless already submitted in this application);

The request to participate in the PPH pilot program and petition comply with the above requirements. Accordingly, the above-identified application has been accorded "special" status.

Inquiries concerning this decision should be directed to Colleen Dunn at 571-272-1170.

All other inquiries concerning the examination or status of the application is accessible in the PAIR system at http://www.uspto.gov/ebc.index.html.

This application will be forwarded to the examiner for action on the merits commensurate with this decision once this application's formality reviews have been completed.

/Colleen Dunn/

Colleen Dunn
Quality Assurance Specialist
Technology Center 2800

UNITED STATES PATENT AND TRADEMARK OFFICE

UNITED STATES DEPARTMENT OF COMMERCE
United States Patent and Trademark Office
Address: COMMISSIONER FOR PATENTS
P.O. Box 1450
Alexandria, Virginia 22313-1450
www.uspto.gov

APPLICATION NO.	FILING DATE	FIRST NAMED INVENTOR	ATTORNEY DOCKET NO.	CONFIRMATION NO.
13/167,064	06/23/2011	Mitsuaki OYA	OKUDP0527USA	7235

51921 7590 07/12/2011
MARK D. SARALINO (PAN)
RENNER, OTTO, BOISSELLE & SKLAR, LLP
1621 EUCLID AVENUE
19TH FLOOR
CLEVELAND, OH 44115

EXAMINER

ART UNIT	PAPER NUMBER
2811	

MAIL DATE	DELIVERY MODE
07/12/2011	PAPER

Please find below and/or attached an Office communication concerning this application or proceeding.

The time period for reply, if any, is set in the attached communication.

UNITED STATES PATENT AND TRADEMARK OFFICE

Commissioner for Patents
United States Patent and Trademark Office
P.O. Box 1450
Alexandria, VA 22313-1450
www.uspto.gov

MARK D. SARALINO (PAN)
RENNER, OTTO, BOISSELLE & SKLAR, LLP
1621 EUCLID AVENUE
19TH FLOOR
CLEVELAND OH 44115

In re Application of
OYA et al.
Application No.: 13/167,064
Filed: 23 June 2011
Attorney Docket No.: OKUDP0527USA
For: NITRIDE-BASED SEMICONDUCTOR DEVICE AND METHOD FOR FABRICATING THE SAME

: DECISION ON REQUEST TO : PARTICIPATE IN THE PATENT : PROSECUTION HIGHWAY : PROGRAM AND PETITION : TO MAKE SPECIAL UNDER : 37 CFR 1.102(a)

This is a decision on the request to participate in the Patent Prosecution Highway (PPH) program and the petition under 37 CFR 1.102(a), filed 24 June 2011, to make the above-identified application special.

The request and petition are **DISMISSED**.

A grantable request to participate in the PPH program and petition to make special require:

1. The U.S. application must validly claim priority under 35 U.S.C. 119(a) to one or more applications filed in the JPO, note where the JPO application with similar claims is not the same application from which the U.S. application claims priority then the applicant must identify the relationship between the JPO application with similar claims and the JPO priority application;

2. Applicant must submit a copy of:
   a. The allowable/patentable claim(s) from the JPO application(s) or if a copy of the allowable/patentable claims is available via the Dossier Access System (DAS) applicant may request the USPTO obtain a copy from the DAS, however if the USPTO is unable to obtain a copy from the DAS the applicant will be required to submit a copy;
   b. An English translation of the allowable/patentable claim(s) and
   c. A statement that the English translation is accurate;

3. Applicant must

a. Ensure all the claims in the U.S. application must sufficiently correspond or be amended to sufficiently correspond to the allowable/patentable claim(s) in the JPO application(s) and
b. Submit a claims correspondence table in English;

4. Examination of the U.S. application has not begun;

5. Applicant must submit:
   a. Documentation of prior office action:
      i. a copy of the office action(s) just prior to the "Decision to Grant a Patent" from each of the JPO application(s) containing the allowable/patentable claim(s) or
      ii. if the allowable/patentable claims(s) are from a "Notification of Reasons for Refusal" then the Notification of Reasons for Refusal or
      iii. if the JPO application is a first action allowance then no office action from the JPO is necessary should be indicated on the request/petition form;

      Further, if a copy of the documents from a or b above is available via the Dossier Access System (DAS) applicant may request the USPTO obtain a copy from the DAS, however if the USPTO is unable to obtain a copy from the DAS the applicant will be required to submit a copy;
   b. An English language translation of the JPO Office action from (5)(a)(i)-(ii) above
   c. A statement that the English translation is accurate (if the translation is not a machine translation provided by the JPO);

6. Applicant must submit:
   a. An IDS listing the documents cited by the JPO examiner in the JPO office action (unless already submitted in this application)
   b. Copies of the documents except U.S. patents or U.S. patent application publications (unless already submitted in this application);

Conditions (1-2) and (4-6) above are considered to have been met. However, the request to participate in the PPH pilot program and petition fails meet condition (3).

Regarding the requirement of condition (3), applicant has failed to ensure that all the claims in the U.S. application sufficiently correspond to the allowable/patentable claims in the JPO application. For example, US claim 1 requires a "p-type GaN-based semiconductor region" while JP claim 1 only requires a "p-type semiconductor region." US claim 1 is narrower in scope than JP claim 1. The PPH agreement with JPO allows for claims of narrower scope in the US application but the narrower claims must be presented in dependent form. It is applicant's responsibility to ensure that all the claims in the US application sufficiently correspond to the allowable/patentable claims in the JPO application.

Applicant is given <u>ONE</u> opportunity within a time period of **ONE MONTH or THIRTY DAYS**, whichever is longer, from the mailing date of this decision to correct the deficiencies. **NO EXTENSION OF TIME UNDER 37 CFR 1.136 IS PERMITTED.** If the deficiencies are not corrected with the time period given, the application will await action in its regular turn.

Response must be filed via the Electronic Filing System (EFS) using the document description: Petition to make special under Patent Pros Hwy. Any preliminary amendments and IDS submitted with the PPH documents must be separately indexed as a preliminary amendment and IDS, respectively.

Telephone inquiries concerning this decision should be directed to Lee W. Young at 571-272-4549.

All other inquiries concerning the examination or status of the application is accessible in the PAIR system at http://www.uspto.gov/ebc/index.html.

Lee W. Young
TQAS Technology Center 2800

UNITED STATES PATENT AND TRADEMARK OFFICE

UNITED STATES DEPARTMENT OF COMMERCE
United States Patent and Trademark Office
Address: COMMISSIONER FOR PATENTS
P.O. Box 1450
Alexandria, Virginia 22313-1450
www.uspto.gov

APPLICATION NO.	FILING DATE	FIRST NAMED INVENTOR	ATTORNEY DOCKET NO.	CONFIRMATION NO.
13/167,064	06/23/2011	Mitsuaki OYA	OKUDP0527USA	7235

51921 7590 10/11/2011
MARK D. SARALINO (PAN)
RENNER, OTTO, BOISSELLE & SKLAR, LLP
1621 EUCLID AVENUE
19TH FLOOR
CLEVELAND, OH 44115

EXAMINER

ART UNIT	PAPER NUMBER
2811	

MAIL DATE	DELIVERY MODE
10/11/2011	PAPER

Please find below and/or attached an Office communication concerning this application or proceeding.

The time period for reply, if any, is set in the attached communication.

UNITED STATES PATENT AND TRADEMARK OFFICE

Commissioner for Patents
United States Patent and Trademark Office
P.O. Box 1450
Alexandria, VA 22313-1450
www.uspto.gov

MARK D. SARALINO (PAN)
RENNER, OTTO, BOISSELLE & SKLAR, LLP
1621 EUCLID AVENUE
19TH FLOOR
CLEVELAND OH 44115

In re Application of
OYA et al.
Application No.: 13/167,064
Filed: 23 June 2011
Attorney Docket No.: OKUDP0527USA
For: NITRIDE-BASED SEMICONDUCTOR DEVICE AND METHOD FOR FABRICATING THE SAME

: DECISION ON REQUEST TO : PARTICIPATE IN THE PATENT : PROSECUTION HIGHWAY : PROGRAM AND PETITION : TO MAKE SPECIAL UNDER : 37 CFR 1.102(a)

This is a decision on the request to participate in the Patent Prosecution Highway (PPH) program and the petition under 37 CFR 1.102(a), filed 24 June 2011 and renewed 27 July 2011, to make the above-identified application special.

The request and petition are **GRANTED**.

Discussion

A grantable request to participate in the PPH pilot program and petition to make special require:

1. The U.S. application is

    a. a Paris Convention application which either
        i. validly claims priority under 35 U.S.C. 119(a) and 37 CFR 1.55 to one or more applications filed in the JPO, or
        ii. validly claims priority to a PCT application that contains no priority claims, or
    b. a national stage application under the PCT (an application which entered the national stage in the U.S. from a PCT international application after compliance with 35 U.S.C. 371), which PCT application
        i. validly claims priority to an application filed in the JPO, or
        ii. validly claims priority to a PCT application that contains no priority claims, or
        iii. contains no priority claim, or

c. a so-called bypass application filed under 35 U.S.C. 111(a) which validly claims benefit under 35 U.S.C. 120 to a PCT application, which PCT application
    i. validly claims priority to an application filed in the JPO, or
    ii. validly claims priority to a PCT application that contains no priority claims, or
    iii. contains no priority claim;

2. Applicant must submit a copy of:
    a. The allowable/patentable claim(s) from the JPO application(s);
    b. An English translation of the allowable/patentable claim(s) and
    c. A statement that the English translation is accurate;
3. Applicant must:
    a. Ensure all the claims in the U.S. application must sufficiently correspond or be amended to sufficiently correspond to the allowable/patentable claim(s) in the JPO application(s) and
    b. Submit a claims correspondence table in English;
4. Examination of the U.S. application has <u>not</u> begun;
5. Applicant must submit:
    a. Documentation of prior office action:
        i. a copy of the office action(s) just prior to the "Decision to Grant a Patent" from each of the JPO application(s) containing the allowable/patentable claim(s) or
        ii. if the allowable/patentable claims(s) are from a "Notification of Reasons for Refusal" then the Notification of Reasons for Refusal or
        iii. if the JPO application is a first action allowance then no office action from the JPO is necessary should be indicated on the request/petition form;
    b. An English language translation of the JPO Office action from (5)(a)(i)-(ii) above
    c. A statement that the English translation is accurate;
6. Applicant must submit:
    a. An IDS listing the documents cited by the JPO examiner in the JPO office action (unless already submitted in this application)
    b. Copies of the documents except U.S. patents or U.S. patent application publications (unless already submitted in this application);

The request to participate in the PPH pilot program and petition comply with the above requirements. Accordingly, the above-identified application has been accorded "special" status.

Inquiries concerning this decision should be directed to Colleen Dunn at 571-272-1170.

All other inquiries concerning the examination or status of the application is accessible in the PAIR system at http://www.uspto.gov/ebc.index.html.

This application will be forwarded to the examiner for action on the merits commensurate with this decision once this application's formality reviews have been completed.

/Colleen Dunn/

Colleen Dunn
Quality Assurance Specialist
Technology Center 2800

UNITED STATES PATENT AND TRADEMARK OFFICE

Commissioner for Patents
United States Patent and Trademark Office
P.O. Box 1450
Alexandria, VA 22313-1450
www.uspto.gov

MICHAEL N. HAYNES
1341 HUNTERSFIELD CLOSE
KESWICK, VA 22947

MAILED

MAR 26 2012

OFFICE OF PETITIONS

In re Application of
Christopher Sortore, et al.
Application No. 13/167,106
Filed: June 23, 2011
Attorney Docket No. 1024-110

DECISION ON PETITION
TO WITHDRAW
FROM RECORD

This is a decision on the Request to Withdraw as attorney or agent of record under 37 C.F.R. § 1.36(b), filed March 9, 2012.

The request is **NOT APPROVED**.

A grantable request to withdraw as attorney/agent of record must be signed by every attorney/agent seeking to withdraw or contain a clear indication that one attorney is signing on behalf of another/others.

Petitioner should note that the Office will no longer accept address changes to a new practitioner of law firm filed with a Request, absent the filing of a power of attorney to the new representative. The Office will either change the correspondence address of record to the most current address information provided for the assignee of the entire interest who properly became of record under 37 CFR 3.71 or, the most current address information provided for the first named inventor.

In order to request or take action in a patent matter, the assignee must establish its ownership of the patent to the satisfaction of the Director. In this regard, a Statement under 37 CFR 3.73(b) must have either: (i) documentary evidence of a chain of title from the original owner to the assignee (*e.g.*, copy of an executed assignment), and a statement affirming that the documentary evidence of the chain of title from the original owner to the assignee was or concurrently is being submitted for recordation pursuant to § 3.11; or (ii) a statement specifying where documentary evidence of a chain of title from the original owner to the assignee is recorded in the assignment records of the Office (*e.g.*, reel and frame number).

Accordingly, since the request to withdraw from record does not include an acceptable current correspondence address for future communications from the Office, the request cannot be granted at the present time.

All future communications from the Office will continue to be directed to the address of record until otherwise notified by applicant.

Telephone inquiries concerning this decision should be directed to undersigned at 571-272-1642. All other inquiries concerning the examination or status of this application should be directed to the Technology Center.

/AMW/
April M. Wise
Petitions Examiner
Office of Petitions

cc: SYNCHRONY, INC
4655 TECHNOLOGY DRIVE
SALEM, VA 24153

UNITED STATES PATENT AND TRADEMARK OFFICE

Commissioner for Patents
United States Patent and Trademark Office
P.O. Box 1450
Alexandria, VA 22313-1450
www.uspto.gov

O'BRIEN JONES, PLLC
1951 Kidwell Drive
Suite 550 B
Tysons Corner, VA 22182

MAILED

JUL 08 2011

OFFICE OF PETITIONS

In re Application of
Roy E. Adkins, et. al.
Application No. 13/167,109
Filed: June 23, 2011
Attorney Docket No. 1097.0001-01000

DECISION ON PETITION
TO MAKE SPECIAL UNDER
37 CFR 1.102(c)(1)

This is a decision on the petition under 37 CFR 1.102(c)(1), filed June 23, 2011, to make the above-identified application special based on applicant's age as set forth in MPEP § 708.02, Section IV.

The petition is **GRANTED**.

A grantable petition to make an application special under 37 CFR 1.102(c)(1) and MPEP § 708.02, Section IV: Applicant's Age must be accompanied by evidence showing that at least one of the applicants is 65 years of age, or more, such as a birth certificate or a statement by applicant. No fee is required.

The instant petition includes a statement from joint inventor, Roy Adkins, that he is 65 years of age or older. Accordingly, the above-identified application has been accorded "special" status.

This application file is being referred to the Office of Patent Application Processing for further processing in accordance with this decision.

Telephone inquiries concerning this decision should be directed to the undersigned at (571) 272-3226. All other inquiries concerning the processing of the application should be addressed to the Office of Patent Application Processing at (571) 272-4000.

Andrea Smith
Petitions Examiner
Office of Petitions

Doc code : PET.OP.AGE
Description : Petition to make special based on Age/Health

PTO/SB/130 (07-09)
Approved for use through 07/31/2012. OMB 0651- 0031
U.S. Patent and Trademark Office; U.S. DEPARTMENT OF COMMERCE
Under the Paperwork Reduction Act of 1995, no persons are required to respond to a collection of information unless it contains a valid OMB control number

PETITION TO MAKE SPECIAL BASED ON AGE FOR ADVANCEMENT OF EXAMINATION UNDER 37 CFR 1.102(c)(1)

Application Information

Application Number	13/167,266	Confirmation Number	7653	Filing Date	2011-06-23
Attorney Docket Number (optional)	BELAPA210	Art Unit	3742	Examiner	
First Named Inventor	Arthur L. Beloff				
Title of Invention	EDIBLE BREAD CUP AND METHOD OF PRODUCTION				

Attention: Office of Petitions
An application may be made special for advancement of examination upon filing of a petition showing that the applicant is 65 years of age, or more. No fee is required with such a petition. See 37 CFR 1.102(c)(1) and MPEP 708.02 (IV).

APPLICANT HEREBY PETITIONS TO MAKE SPECIAL FOR ADVANCEMENT OF EXAMINATION IN THIS APPLICATION UNDER 37 CFR 1.102(c)(1) and MPEP 708.02 (IV) ON THE BASIS OF THE APPLICANT'S AGE.

A grantable petition requires one of the following items:
(1) Statement by one named inventor in the application that he/she is 65 years of age, or more; or
(2) Certification by a registered attorney/agent having evidence such as a birth certificate, passport, driver's license, etc. showing one named inventor in the application is 65 years of age, or more.

Name of Inventor who is 65 years of age, or older

Given Name	Middle Name	Family Name	Suffix
Arthur	L.	Beloff	

A signature of the applicant or representative is required in accordance with 37 CFR 1.33 and 10.18.
Please see 37 CFR 1.4(d) for the format of the signature.

Select (1) or (2) :

○ (1) I am an inventor in this application and I am 65 years of age, or more.

● (2) I am an attorney or agent registered to practice before the Patent and Trademark Office, and I certify that I am in possession of evidence, and will retain such in the application file record, showing that the inventor listed above is 65 years of age, or more.

Signature	/Robert M. Downey/	Date (YYYY-MM-DD)	2011-12-15
Name	Robert M. Downey	Registration Number	33684

PTO/SB/130 (07-09)
Approved for use through 07/31/2012. OMB 0651- 0031
U.S. Patent and Trademark Office; U.S. DEPARTMENT OF COMMERCE
Under the Paperwork Reduction Act of 1995, no persons are required to respond to a collection of information unless it contains a valid OMB control number

Privacy Act Statement

The Privacy Act of 1974 (P.L. 93-579) requires that you be given certain information in connection with your submission of the attached form related to a patent application or patent. Accordingly, pursuant to the requirements of the Act, please be advised that: (1) the general authority for the collection of this information is 35 U.S.C. 2(b)(2); (2) furnishing of the information solicited is voluntary; and (3) the principal purpose for which the information is used by the U.S. Patent and Trademark Office is to process and/or examine your submission related to a patent application or patent. If you do not furnish the requested information, the U.S. Patent and Trademark Office may not be able to process and/or examine your submission, which may result in termination of proceedings or abandonment of the application or expiration of the patent.

The information provided by you in this form will be subject to the following routine uses:

1. The information on this form will be treated confidentially to the extent allowed under the Freedom of Information Act (5 U.S.C. 552) and the Privacy Act (5 U.S.C. 552a). Records from this system of records may be disclosed to the Department of Justice to determine whether the Fr eedom of Information Act requires disclosure of these records.

2. A record from this system of records may be disclosed, as a routine use, in the course of presenting evidence to a court, magistrate, or administrative tribunal, including disclosures to opposing counsel in the course of settlement negotiations.

3. A record in this system of records may be disclosed, as a routine use, to a Member of Congress submitting a request involving an individual, to whom the record pertains, when the individual has requested assistance from the Member with respect to the subject matter of the record.

4. A record in this system of records may be disclosed, as a routine use, to a contractor of the Agency having need for the information in order to perform a contract. Recipients of information shall be required to comply with the requirements of the Privacy Act of 1974, as amended, pursuant to 5 U.S.C. 552a(m).

5. A record related to an International Application filed under the Patent Cooperation Treaty in this system of records may be disclosed, as a routine use, to the International Bureau of the World Intellectual Property Organization, pursuant to the Patent Cooperation Treaty.

6. A record in this system of records may be disclosed, as a routine use, to another federal agency for purposes of National Security review (35 U.S.C. 181) and for review pursuant to the Atomic Energy Act (42 U.S.C. 218(c)).

7. A record from this system of records may be disclosed, as a routine use, to the Administrator, General Services, or his/her designee, during an inspection of records conducted by GSA as part of that agency's responsibility to recommend improvements in records management practices and programs, under authority of 44 U.S.C. 2904 and 2906. Such disclosure shall be made in accordance with the GSA regulations governing inspection of records for this purpose, and any other relevant (i.e., GSA or Commerce) directive. Such disclosure shall not be used to make determinations about indivi duals.

8. A record from this system of records may be disclosed, as a routine use, to the public after either publication of the application pursuant to 35 U.S.C. 122(b) or issuance of a patent pursuant to 35 U.S.C. 151. Further, a record may be disclosed, subject to the limitations of 37 CFR 1.14, as a routine use, to the public if the record was filed in an application which became abandoned or in which the proceedings were terminated and which application is referenced by either a published application, an application open to public inspections or an issued patent.

9. A record from this system of records may be disclosed, as a routine use, to a Federal, State, or local law enforcement agency, if the USPTO becomes aware of a violation or potential violation of law or regulation.

UNITED STATES PATENT AND TRADEMARK OFFICE

Commissioner for Patents
United States Patent and Trademark Office
P.O. Box 1450
Alexandria, VA 22313-1450
www.uspto.gov

In re Application of
Arthur L. Beloff

Application No. 13167266

Filed: June 23,2011

Attorney Docket No. BELAPA210

:DECISION ON PETITION TO MAKE SPECIAL
:UNDER 37 CFR 1.102(c)(1)

This is a decision on the electronic petition under 37 CFR 1.102 (c)(1), filed 15-DEC-2011 to make the above-identified application special based on applicant's age as set forth in MPEP § 708.02, Section IV.

The petition is **GRANTED**.

A grantable petition to make an application special under 37 CFR 1.102(c)(1), MPEP § 708.02, Section IV: Applicant's Age must include a statement by applicant or a registered practitioner having evidence that applicant is at least 65 years of age. No fee is required.

Accordingly, the above-identified application has been accorded "special" status and will be taken up for action by the examiner upon the completion of all pre-examination processing.

Telephone inquiries concerning this electronic decision should be directed to the Electronic Business Center at 866-217-9197.

All other inquiries concerning either the examination or status of the application should be directed to the Technology Center.

UNITED STATES PATENT AND TRADEMARK OFFICE

Commissioner for Patents
United States Patent and Trademark Office
P.O. Box 1450
Alexandria, VA 22313-1450
www.uspto.gov

Elizabeth R. Hall
Elizabeth R. Hall & Associates, P.C.
P.O. Box 66629
Houston, TX 77266-6629

MAILED

JUL 07 2011

OFFICE OF PETITIONS

In re Application of
Tommie Carroll Gipson
Application No. 13/167,270
Filed: 00/00/0000
Attorney Docket No. GIPS-P005US

:DECISION ON PETITION
:TO MAKE SPECIAL UNDER
: 37 CFR 1.102(c)(1)

This is a decision on the petition under 37 CFR 1.102(c)(1), filed June 23, 2011, to make the above-identified application special based on applicant's age as set forth in MPEP § 708.02, Section IV.

The petition is **GRANTED**.

A grantable petition to make an application special under 37 CFR 1.102(c)(1) and MPEP § 708.02, Section IV: Applicant's Age must be accompanied by evidence showing that at least one of the applicants is 65 years of age, or more, such as a birth certificate or a statement by applicant. No fee is required.

The instant petition includes a statement from the attorney of record, Elizabeth Hall, that the sole inventor is 65 years of age or older. Accordingly, the above-identified application has been accorded "special" status.

This application file is being referred to the Office of Patent Application Processing for further processing in accordance with this decision.

Telephone inquiries concerning this decision should be directed to the undersigned at (571) 272-3226. All other inquiries concerning the processing of the application should be addressed to the Office of Patent Application Processing at (571) 272-4000.

Andrea Smith
Petitions Examiner
Office of Petitions

Doc Code: PET.GREEN
Document Description: Petition for Green Tech Pilot

PTO/SB/420 (03-11)

PETITION TO MAKE SPECIAL UNDER THE GREEN TECHNOLOGY PILOT PROGRAM

Attorney Docket Number: 243984	Application Number (if known): 13/167,332	Filing date: June 23, 2011

First Named Inventor: Matthijs Leonardus Gerardus Boerlage

Title: METHOD AN DSYSTEM FOR OPERATING A WIND TURBINE

APPLICANT HEREBY REQUESTS TO PARTICIPATE IN THE GREEN TECHNOLOGY PILOT PROGRAM FOR THE ABOVE-IDENTIFIED APPLICATION. See Instruction Sheet on page 2.

This petition must be timely filed electronically using the USPTO electronic filing system, EFS-Web.

1. By filing this petition:

   Applicant is requesting early publication: Applicant hereby requests early publication under 37 CFR 1.219 and the publication fee set forth in 37 CFR 1.18(d) accompanies this request.

2. By filing this petition: applicant is agreeing to make an election without traverse in a telephonic interview and elect an invention that meets the eligibility requirements for the Green Technology Pilot Program, if the Office determines that the claims are not obviously directed to a single invention. See Instruction Sheet.

3. This request is accompanied by statements of special status for the eligibility requirement.

4. The application contains no more than three (3) independent claims and twenty (20) total claims.

5. The application does not contain any multiple dependent claims.

6. Other attachments: Statement Concerning the Basis for the Special Status

Signature /Allison W. Mages/	Date October 10, 2011
Name (Print/Typed) Allison W. Mages	Registration Number 57,275

Note: Signatures of all the inventors or assignees of record of the entire interest or their representative(s) are required in accordance with 37 CFR 1.33 and 11.18. Please see 37 CFR 1.4(d) for the form of the signature. If necessary, submit multiple forms for more than one signature, see below.*

☐ *Total of _____ forms are submitted.

If you need assistance in completing the form, call 1-800-PTO-9199 and select option 2.

IN THE UNITED STATES PATENT AND TRADEMARK OFFICE

First Named Inventor: Matthijs Leonardus Gerardus Boerlage	)
Confirmation No.: 7787	)
	)
Serial No.: 13/167,332	)
	)
Filing Date: June 23, 2011	)
	)
Atty Docket No.: 243984	)

VIA EFS
Commissioner for Patents
P.O. Box 1450
Alexandria, VA 22313-1450

Statement Concerning the Basis for the Special Status

SIR:

The application relates generally to a wind turbine, and more specifically relates to a system and a method for protection of a wind turbine against extreme load conditions. (See [0001]).

The application offers technical benefits such as continuity of power generation, protection from an overload condition arising out of high wind speeds, and a method of operating the wind turbine in a safe mode particularly during overload conditions, thereby preventing damage to turbine blades while maintaining continuity of power generation. (See [0010]).

Applicant respectfully submits that Special Status is sought on the basis that the present invention materially contributes to the discovery or development of renewable energy resources.

The undersigned representative may be contacted at the number below to facilitate the resolution of any matters. Please charge any fees that are incurred in connection with this Statement to deposit account no. 09-0470.

Respectfully submitted,

General Electric Company

By : /Allison W. Mages/
Allison W. Mages
Reg. No. 57,275

Dated: October 10, 2011

GE Global Patent Operation
2 Corporate Drive, Suite 648
Shelton, CT 06484
203-944-6730

Doc Code: PET.GREEN
Document Description: Petition for Green Tech Pilot

PTO/SB/420 (03-11)

PETITION TO MAKE SPECIAL UNDER THE GREEN TECHNOLOGY PILOT PROGRAM

Attorney Docket Number: VWS-05CO2	Application Number (if known): 13/167,379	Filing date: June 23, 2011

First Named Inventor: Borge Ollgaard

Title: WIND TURBINE TOWER SUSPENSION MEANS

APPLICANT HEREBY REQUESTS TO PARTICIPATE IN THE GREEN TECHNOLOGY PILOT PROGRAM FOR THE ABOVE-IDENTIFIED APPLICATION. See Instruction Sheet on page 2.

This petition must be timely filed electronically using the USPTO electronic filing system, EFS-Web.

1. By filing this petition:

   Applicant is requesting early publication: Applicant hereby requests early publication under 37 CFR 1.219 and the publication fee set forth in 37 CFR 1.18(d) accompanies this request.

2. By filing this petition: applicant is agreeing to make an election without traverse in a telephonic interview and elect an invention that meets the eligibility requirements for the Green Technology Pilot Program, if the Office determines that the claims are not obviously directed to a single invention. See Instruction Sheet.

3. This request is accompanied by statements of special status for the eligibility requirement.

4. The application contains no more than three (3) independent claims and twenty (20) total claims.

5. The application does not contain any multiple dependent claims.

6. Other attachments: Statement of Special Status for Eligibility under the Green Technology Program

Signature /Steven W. Benintendi/	Date August 12, 2011
Name (Print/Typed) Steven W. Benintendi	Registration Number 56,297

Note: *Signatures of all the inventors or assignees of record of the entire interest or their representative(s) are required in accordance with 37 CFR 1.33 and 11.18. Please see 37 CFR 1.4(d) for the form of the signature. If necessary, submit multiple forms for more than one signature, see below*.*

☒ *Total of 1 forms are submitted.

If you need assistance in completing the form, call 1-800-PTO-9199 and select option 2.

Instruction Sheet for
Petition to Make Special Under the Green Technology Pilot Program

(Not to be Submitted to the USPTO)

The following is a summary of the requirements (for more information see the notices (i) "Pilot Program for Green Technologies Including Greenhouse Gas Reduction," (ii) "Elimination of Classification Requirement in the Green Technology Pilot Program," and (iii) "Expansion and Extension of the Green Technology Pilot Program," available on the USPTO web site at http://www.uspto.gov/patents/init_events/green_tech.jsp):

(1) The application must be a non-reissue, non-provisional utility application filed under 35 U.S.C. 111(a), or an international application that has entered the national stage in compliance with 35 U.S.C. 371, irrespective of the filing date of the application. Reexamination proceedings are excluded from this pilot program.

(2) The application must contain three or fewer independent claims and twenty or fewer total claims. The application must not contain any multiple dependent claims. For an application that contains more than three independent claims or twenty total claims, or multiple dependent claims, applicant must file a preliminary amendment in compliance with 37 CFR 1.121 to cancel the excess claims and/or the multiple dependent claims at the time the petition to make special is filed.

(3) The claims must be directed to a single invention that materially enhances the quality of the environment, or that materially contributes to: (1) the discovery or development of renewable energy resources; (2) the more efficient utilization and conservation of energy resources; or (3) green house gas emission reduction (see the eligibility requirements of sections II and III of the notice (i) cited above). The petition must include a statement that, if the USPTO determines that the claims are directed to multiple inventions (e.g., in a restriction requirement), applicant will agree to make an election without traverse in a telephonic interview, and elect an invention that meets the eligibility requirements in section II or III of the notice (i) cited above.

(4) The petition to make special must be timely filed electronically using the USPTO electronic filing system, EFS-Web, and selecting the document description of "Petition for Green Tech Pilot" on the EFS-Web screen. Applicant should use form PTO/SB/420, which is available as a Portable Document Format (PDF) fillable form in EFS-Web and on the USPTO Web site.

(5) The petition to make special must be filed at least one day prior to the date that a first Office action (which may be an Office action containing only a restriction requirement) appears in the Patent Application Information Retrieval (PAIR) system. Applicant may check the status of the application using PAIR.

(6) The petition to make special must be accompanied by a request for early publication in compliance with 37 CFR 1.219 and the publication fee set forth in 37 CFR 1.18(d).

Privacy Act Statement

The **Privacy Act of 1974 (P.L. 93-579)** requires that you be given certain information in connection with your submission of the attached form related to a patent application or patent. Accordingly, pursuant to the requirements of the Act, please be advised that: (1) the general authority for the collection of this information is 35 U.S.C. 2(b)(2); (2) furnishing of the information solicited is voluntary; and (3) the principal purpose for which the information is used by the U.S. Patent and Trademark Office is to process and/or examine your submission related to a patent application or patent. If you do not furnish the requested information, the U.S. Patent and Trademark Office may not be able to process and/or examine your submission, which may result in termination of proceedings or abandonment of the application or expiration of the patent.

The information provided by you in this form will be subject to the following routine uses:

1. The information on this form will be treated confidentially to the extent allowed under the Freedom of Information Act (5 U.S.C. 552) and the Privacy Act (5 U.S.C 552a). Records from this system of records may be disclosed to the Department of Justice to determine whether disclosure of these records is required by the Freedom of Information Act.
2. A record from this system of records may be disclosed, as a routine use, in the course of presenting evidence to a court, magistrate, or administrative tribunal, including disclosures to opposing counsel in the course of settlement negotiations.
3. A record in this system of records may be disclosed, as a routine use, to a Member of Congress submitting a request involving an individual, to whom the record pertains, when the individual has requested assistance from the Member with respect to the subject matter of the record.
4. A record in this system of records may be disclosed, as a routine use, to a contractor of the Agency having need for the information in order to perform a contract. Recipients of information shall be required to comply with the requirements of the Privacy Act of 1974, as amended, pursuant to 5 U.S.C. 552a(m).
5. A record related to an International Application filed under the Patent Cooperation Treaty in this system of records may be disclosed, as a routine use, to the International Bureau of the World Intellectual Property Organization, pursuant to the Patent Cooperation Treaty.
6. A record in this system of records may be disclosed, as a routine use, to another federal agency for purposes of National Security review (35 U.S.C. 181) and for review pursuant to the Atomic Energy Act (42 U.S.C. 218(c)).
7. A record from this system of records may be disclosed, as a routine use, to the Administrator, General Services, or his/her designee, during an inspection of records conducted by GSA as part of that agency's responsibility to recommend improvements in records management practices and programs, under authority of 44 U.S.C. 2904 and 2906. Such disclosure shall be made in accordance with the GSA regulations governing inspection of records for this purpose, and any other relevant (*i.e.*, GSA or Commerce) directive. Such disclosure shall not be used to make determinations about individuals.
8. A record from this system of records may be disclosed, as a routine use, to the public after either publication of the application pursuant to 35 U.S.C. 122(b) or issuance of a patent pursuant to 35 U.S.C. 151. Further, a record may be disclosed, subject to the limitations of 37 CFR 1.14, as a routine use, to the public if the record was filed in an application which became abandoned or in which the proceedings were terminated and which application is referenced by either a published application, an application open to public inspection or an issued patent.
9. A record from this system of records may be disclosed, as a routine use, to a Federal, State, or local law enforcement agency, if the USPTO becomes aware of a violation or potential violation of law or regulation.

Certificate of Electronic Transmission

I hereby certify that this correspondence is being electronically transmitted to the U.S. Patent and Trademark Office via EFS-WEB on August 12, 2011.

/Steven W. Benintendi/ August 12, 2011
Steven W. Benintendi Date
Reg. No. 56,297

PATENT

IN THE UNITED STATES PATENT AND TRADEMARK OFFICE

Applicant:	Børge Øllgaard
Serial No.:	13/167,379
Filed:	June 23, 2011
Group Art Unit:	2839
Examiner:	Not yet assigned
Confirmation No.:	7887
Title:	WIND TURBINE TOWER SUSPENSION MEANS
Attorney Docket:	VWS-05CO2

Cincinnati, Ohio 45202 August 12, 2011

Commissioner for Patents
P.O. Box 1450
Alexandria, VA 22313-1450

Sir:

STATEMENT OF SPECIAL STATUS FOR ELIGIBILITY UNDER THE GREEN TECHNOLOGY PILOT PROGRAM

Applicant hereby submits a statement to support Applicant's petition for the Green Technology Pilot Program, which is filed on even date herewith. The Applicant seeks special status because the invention disclosed and claimed in the present application materially enhances the quality of the environment by contributing to the restoration or maintenance of basic life-sustaining natural elements. The materiality standard is satisfied because the claimed invention materially enhances the quality of the environment by contributing to the restoration or maintenance of one of the basic life-sustaining natural elements and/or the claimed invention materially contributes to

the development of renewable energy or energy conservation and greenhouse gas emission reduction. Specifically, the claimed invention relates to wind turbines that operate using a renewable natural resource (wind) rather than fossil fuels. Wind turbine operation without the consumption of fossil fuels enhances the quality of the environment, contributes to the development of renewable energy, and reduces greenhouse gas emission. More particularly, aspects of the invention are directed to improving the structural integrity of wind turbine towers, which in turn may extend the operating life of the wind turbine. This is achieved by providing a platform arrangement that avoids the weakening effects of bolted connections through the tower wall. Of course, improved operating life of the wind turbine will increase the overall efficiency of wind power generation and make this green technology more attractive and competitive in the market place.

Early and favorable consideration of Applicant's petition and the claims contained in this application are respectfully requested.

Applicant does not believe that any fees are due in connection with this communication other than the publication fee. If, however, any fees are necessary as a result of this communication, the Commissioner is hereby authorized to charge any under-payment of fees associated with this communication or credit any over-payment to Deposit Account 23-3000.

Respectfully submitted,

WOOD, HERRON & EVANS, L.L.P.

/Steven W. Benintendi/
Steven W. Benintendi
Reg. No. 56,297

2700 Carew Tower
441 Vine Street
Cincinnati, OH 45202
(513) 241-2324 (voice)
(513) 421-7269 (facsimile)

UNITED STATES PATENT AND TRADEMARK OFFICE

UNITED STATES DEPARTMENT OF COMMERCE
United States Patent and Trademark Office
Address: COMMISSIONER FOR PATENTS
P.O. Box 1450
Alexandria, Virginia 22313-1450
www.uspto.gov

APPLICATION NO.	FILING DATE	FIRST NAMED INVENTOR	ATTORNEY DOCKET NO.	CONFIRMATION NO.
13/167,379	06/23/2011	Børge Øllgaard	VWS-05CO2	7887

83583 7590 08/29/2011
Wood, Herron & Evans, LLP (Vestas Wind Systems)
441 Vine Street
2700 Carew Tower
Cincinnati, OH 45202

EXAMINER
KATCHEVES, BASIL S

ART UNIT	PAPER NUMBER
3635	

NOTIFICATION DATE	DELIVERY MODE
08/29/2011	ELECTRONIC

Please find below and/or attached an Office communication concerning this application or proceeding.

The time period for reply, if any, is set in the attached communication.

Notice of the Office communication was sent electronically on above-indicated "Notification Date" to the following e-mail address(es):

amalik@whepatent.com
eobrien@whepatent.com
USPTODOCK@whepatent.com

UNITED STATES PATENT AND TRADEMARK OFFICE

Commissioner for Patents
United States Patent and Trademark Office
P.O. Box 1450
Alexandria, VA 22313-1450
www.uspto.gov

AUG 2 6 2011

Wood, Herron & Evans, LLP (Vestas Wind Systems)
441 Vine Street
2700 Carew Tower
Cincinnati OH 45202

In re Application of	:	
BØRGE ØLLGAARD	:	DECISION ON PETITION
Application No. 13/167,379	:	TO MAKE SPECIAL UNDER
Filed: June 23, 2011	:	THE GREEN TECHNOLOGY
Attorney Docket No. VWS-05CO2	:	PILOT PROGRAM

This is a decision on the petition under 37 CFR 1.102, filed August 12, 2011 to make the above-identified application special under the pilot program for applications pertaining to Green Technologies as set forth in 74 Federal Register Notice 64666 (December 8, 2009) and amended by 75 Federal Register Notice 28554 (May 21, 2010) and 75 Federal Register Notice 69049 (November 10, 2010).

The petition is **DISMISSED**.

If reconsideration of this decision is desired, a petition for reconsideration must be filed within ONE (1) MONTH OR THIRTY (30) DAYS from the mail date of this decision, whichever is longer. No extension of this time limit can be granted under 37 CFR 1.136(a) or (b). The petition for reconsideration should include an exhaustive attempt to provide the lacking item(s) noted below, since, after a decision on the petition for reconsideration, no further reconsideration or review of the matter will be undertaken by the Director.

A grantable petition to make an application special under 37 CFR 1.102 and the pilot program as set forth in 74 FR 64666 must be directed to a nonprovisional application filed under 35 USC 111(a) or be a national stage entry under 35 USC 371, exclusive of any reissue applications.

In order to qualify for special status, the following requirements must be met. 1) The application must have no more than 3 independent claims and no more than 20 total claims. 2) The application must not contain any multiple dependent claims. 3) The petition must state the basis for seeking special status, i.e., the claimed invention either: A) materially enhances the quality of the environment or B) materially contributes to: i) the discovery or development of renewable energy resources, ii) the more efficient utilization and conservation of energy resources, or iii) greenhouse gas emission reduction. 4) If the disclosure is not clear on its face that the claimed invention materially contributes under category (A) or (B), the petition must be accompanied by a statement by the applicant, assignee, or an attorney/agent registered to practice before the

Office explaining how the materiality standard is met. 5) A statement that applicant will agree to make an election without traverse in a telephonic interview if a restriction requirement is made by the examiner. 6) The petition to make special must be filed electronically. 7) The petition must be filed at least one day prior to the date that a first Office Action appears in the Patent Application Information Retrieval (PAIR) system. 8) The petition must be accompanied by a request for early publication in compliance with 37 CFR 1.219 and include the publication fee as set forth in 37 CFR 1.18(d).

The requirement for a fee for consideration of the petition to make special for applications pertaining to Green Technologies has been waived.

The petition lacks item(s) 4.

In regard to item 4, the claimed tower, in and by itself, would not ordinarily contribute to the development of renewable energy resources -- the claimed tower cannot generate energy or convert kinetic energy from the wind into the mechanical energy into electrical energy. There is no evidence in the present application that the claimed tower play any role in the operation of the wind turbine to convert wind energy into mechanical energy to produce electricity. There is also no evidence in the present application that the claimed tower enhances the quality of the environment, or materially contributes to the development of renewable energy resources, and reduces greenhouse gas emission. In addition, as the claimed tower would not necessarily be used to support a wind turbine, petitioner's assertion of the claimed tower's contribution to the development of renewable energy resources is entirely speculative.
As stated in the notice, the materiality standard does not permit an applicant to speculate as to how a hypothetical end-user might specially apply the invention in a manner than could materially contribute to category (A) or (B). *Also see MPEP § 708.02 (VI).* Accordingly, it is not agreed that the application on its face meets that materiality standard.

Any reconsideration of this decision should be submitted through the USPTO electronic filing system, EFS-Web, and selecting the document description of "Petition for Green Tech Pilot" on the EFS-Web screen.

Telephone inquiries concerning this decision should be directed to Lanna Mai at 571-272-6867.

The application is being forwarded to the Technology Center Art Unit 3635 for action in its regular turn.

/Lanna Mai/

Lanna Mai
Quality Assurance Specialist
Technology Center 3600

Certificate of Electronic Transmission

I hereby certify that this correspondence is being electronically transmitted to the U.S. Patent and Trademark Office via EFS-WEB on August 12, 2011.

/Steven W. Benintendi/ August 12, 2011
Steven W. Benintendi Date
Reg. No. 56,297

PATENT

IN THE UNITED STATES PATENT AND TRADEMARK OFFICE

Applicant:	Jonas Kristensen
Serial No.:	13/167,385
Filed:	June 23, 2011
Group Art Unit:	3672
Examiner:	Not yet assigned
Confirmation No.:	7897
Title:	TOWER, A WIND TURBINE AND A METHOD FOR ARRANGING A PLATFORM INSIDE A TOWER
Attorney Docket:	VWS-15CO

Cincinnati, Ohio 45202 August 12, 2011

Commissioner for Patents
P.O. Box 1450
Alexandria, VA 22313-1450

Sir:

STATEMENT OF SPECIAL STATUS FOR ELIGIBILITY UNDER THE GREEN TECHNOLOGY PILOT PROGRAM

Applicant hereby submits a statement to support Applicant's petition for the Green Technology Pilot Program, which is filed on even date herewith. The Applicant seeks special status because the invention disclosed and claimed in the present application materially enhances the quality of the environment by contributing to the restoration or maintenance of basic life-sustaining natural elements. The materiality standard is satisfied because the claimed invention materially enhances the quality of the environment by contributing to the restoration or maintenance of one of the basic

life-sustaining natural elements and/or the claimed invention materially contributes to the development of renewable energy or energy conservation and greenhouse gas emission reduction. Specifically, the claimed invention relates to wind turbines that operate using a renewable natural resource (wind) rather than fossil fuels. Wind turbine operation without the consumption of fossil fuels enhances the quality of the environment, contributes to the development of renewable energy, and reduces greenhouse gas emission. More particularly, aspects of the invention are directed to improving the structural integrity of wind turbine towers, which in turn may extend the operating life of the wind turbine. This is achieved by providing a platform/ladder arrangement that avoids the weakening effects of bolted connections through the tower wall. Of course, improved operating life of the wind turbine will increase the overall efficiency of wind power generation and make this green technology more attractive and competitive in the market place.

Early and favorable consideration of Applicant's petition and the claims contained in this application are respectfully requested.

Applicant does not believe that any fees are due in connection with this communication other than the publication fee. If, however, any fees are necessary as a result of this communication, the Commissioner is hereby authorized to charge any under-payment of fees associated with this communication or credit any over-payment to Deposit Account 23-3000.

Respectfully submitted,

WOOD, HERRON & EVANS, L.L.P.

/Steven W. Benintendi/
Steven W. Benintendi
Reg. No. 56,297

2700 Carew Tower
441 Vine Street
Cincinnati, OH 45202
(513) 241-2324 (voice)
(513) 421-7269 (facsimile)

Doc Code: PET.GREEN
Document Description: Petition for Green Tech Pilot

PTO/SB/420 (03-11)

PETITION TO MAKE SPECIAL UNDER THE GREEN TECHNOLOGY PILOT PROGRAM

Attorney Docket Number: VWS-15CO	Application Number (if known): 13/167,385	Filing date: June 23, 2011

First Named Inventor: Jonas Kristensen

Title: Tower, a Wind Turbine and a Method for Arranging a Platform Inside a Tower

APPLICANT HEREBY REQUESTS TO PARTICIPATE IN THE GREEN TECHNOLOGY PILOT PROGRAM FOR THE ABOVE-IDENTIFIED APPLICATION. See Instruction Sheet on page 2.

This petition must be timely filed electronically using the USPTO electronic filing system, EFS-Web.

1. By filing this petition:

   Applicant is requesting early publication: Applicant hereby requests early publication under 37 CFR 1.219 and the publication fee set forth in 37 CFR 1.18(d) accompanies this request.

2. By filing this petition: applicant is agreeing to make an election without traverse in a telephonic interview and elect an invention that meets the eligibility requirements for the Green Technology Pilot Program, if the Office determines that the claims are not obviously directed to a single invention. See Instruction Sheet.

3. This request is accompanied by statements of special status for the eligibility requirement.

4. The application contains no more than three (3) independent claims and twenty (20) total claims.

5. The application does not contain any multiple dependent claims.

6. Other attachments: Statement of Special Status for Eligibility under the Green Technology Program

Signature /Steven W. Benintendi/	Date August 12, 2011
Name (Print/Typed) Steven W. Benintendi	Registration Number 56,297

Note: *Signatures of all the inventors or assignees of record of the entire interest or their representative(s) are required in accordance with 37 CFR 1.33 and 11.18. Please see 37 CFR 1.4(d) for the form of the signature. If necessary, submit multiple forms for more than one signature, see below*.*

☒ *Total of 1 forms are submitted.

If you need assistance in completing the form, call 1-800-PTO-9199 and select option 2.

Instruction Sheet for
Petition to Make Special Under the Green Technology Pilot Program

(Not to be Submitted to the USPTO)

The following is a summary of the requirements (for more information see the notices (i) "Pilot Program for Green Technologies Including Greenhouse Gas Reduction," (ii) "Elimination of Classification Requirement in the Green Technology Pilot Program," and (iii) "Expansion and Extension of the Green Technology Pilot Program," available on the USPTO web site at http://www.uspto.gov/patents/init_events/green_tech.jsp):

(1) The application must be a non-reissue, non-provisional utility application filed under 35 U.S.C. 111(a), or an international application that has entered the national stage in compliance with 35 U.S.C. 371, irrespective of the filing date of the application. Reexamination proceedings are excluded from this pilot program.

(2) The application must contain three or fewer independent claims and twenty or fewer total claims. The application must not contain any multiple dependent claims. For an application that contains more than three independent claims or twenty total claims, or multiple dependent claims, applicant must file a preliminary amendment in compliance with 37 CFR 1.121 to cancel the excess claims and/or the multiple dependent claims at the time the petition to make special is filed.

(3) The claims must be directed to a single invention that materially enhances the quality of the environment, or that materially contributes to: (1) the discovery or development of renewable energy resources; (2) the more efficient utilization and conservation of energy resources; or (3) green house gas emission reduction (see the eligibility requirements of sections II and III of the notice (i) cited above). The petition must include a statement that, if the USPTO determines that the claims are directed to multiple inventions (e.g., in a restriction requirement), applicant will agree to make an election without traverse in a telephonic interview, and elect an invention that meets the eligibility requirements in section II or III of the notice (i) cited above.

(4) The petition to make special must be timely filed electronically using the USPTO electronic filing system, EFS-Web, and selecting the document description of "Petition for Green Tech Pilot" on the EFS-Web screen. Applicant should use form PTO/SB/420, which is available as a Portable Document Format (PDF) fillable form in EFS-Web and on the USPTO Web site.

(5) The petition to make special must be filed at least one day prior to the date that a first Office action (which may be an Office action containing only a restriction requirement) appears in the Patent Application Information Retrieval (PAIR) system. Applicant may check the status of the application using PAIR.

(6) The petition to make special must be accompanied by a request for early publication in compliance with 37 CFR 1.219 and the publication fee set forth in 37 CFR 1.18(d).

Privacy Act Statement

The **Privacy Act of 1974 (P.L. 93-579)** requires that you be given certain information in connection with your submission of the attached form related to a patent application or patent. Accordingly, pursuant to the requirements of the Act, please be advised that: (1) the general authority for the collection of this information is 35 U.S.C. 2(b)(2); (2) furnishing of the information solicited is voluntary; and (3) the principal purpose for which the information is used by the U.S. Patent and Trademark Office is to process and/or examine your submission related to a patent application or patent. If you do not furnish the requested information, the U.S. Patent and Trademark Office may not be able to process and/or examine your submission, which may result in termination of proceedings or abandonment of the application or expiration of the patent.

The information provided by you in this form will be subject to the following routine uses:

1. The information on this form will be treated confidentially to the extent allowed under the Freedom of Information Act (5 U.S.C. 552) and the Privacy Act (5 U.S.C 552a). Records from this system of records may be disclosed to the Department of Justice to determine whether disclosure of these records is required by the Freedom of Information Act.
2. A record from this system of records may be disclosed, as a routine use, in the course of presenting evidence to a court, magistrate, or administrative tribunal, including disclosures to opposing counsel in the course of settlement negotiations.
3. A record in this system of records may be disclosed, as a routine use, to a Member of Congress submitting a request involving an individual, to whom the record pertains, when the individual has requested assistance from the Member with respect to the subject matter of the record.
4. A record in this system of records may be disclosed, as a routine use, to a contractor of the Agency having need for the information in order to perform a contract. Recipients of information shall be required to comply with the requirements of the Privacy Act of 1974, as amended, pursuant to 5 U.S.C. 552a(m).
5. A record related to an International Application filed under the Patent Cooperation Treaty in this system of records may be disclosed, as a routine use, to the International Bureau of the World Intellectual Property Organization, pursuant to the Patent Cooperation Treaty.
6. A record in this system of records may be disclosed, as a routine use, to another federal agency for purposes of National Security review (35 U.S.C. 181) and for review pursuant to the Atomic Energy Act (42 U.S.C. 218(c)).
7. A record from this system of records may be disclosed, as a routine use, to the Administrator, General Services, or his/her designee, during an inspection of records conducted by GSA as part of that agency's responsibility to recommend improvements in records management practices and programs, under authority of 44 U.S.C. 2904 and 2906. Such disclosure shall be made in accordance with the GSA regulations governing inspection of records for this purpose, and any other relevant (*i.e.*, GSA or Commerce) directive. Such disclosure shall not be used to make determinations about individuals.
8. A record from this system of records may be disclosed, as a routine use, to the public after either publication of the application pursuant to 35 U.S.C. 122(b) or issuance of a patent pursuant to 35 U.S.C. 151. Further, a record may be disclosed, subject to the limitations of 37 CFR 1.14, as a routine use, to the public if the record was filed in an application which became abandoned or in which the proceedings were terminated and which application is referenced by either a published application, an application open to public inspection or an issued patent.
9. A record from this system of records may be disclosed, as a routine use, to a Federal, State, or local law enforcement agency, if the USPTO becomes aware of a violation or potential violation of law or regulation.

UNITED STATES PATENT AND TRADEMARK OFFICE

UNITED STATES DEPARTMENT OF COMMERCE
United States Patent and Trademark Office
Address: COMMISSIONER FOR PATENTS
P.O. Box 1450
Alexandria, Virginia 22313-1450
www.uspto.gov

APPLICATION NO.	FILING DATE	FIRST NAMED INVENTOR	ATTORNEY DOCKET NO.	CONFIRMATION NO.
13/167,385	06/23/2011	Jonas Kristensen	VWS-15CO	7897

83583 7590 08/29/2011
Wood, Herron & Evans, LLP (Vestas Wind Systems)
441 Vine Street
2700 Carew Tower
Cincinnati, OH 45202

EXAMINER
KATCHEVES, BASIL S

ART UNIT	PAPER NUMBER
3635	

NOTIFICATION DATE	DELIVERY MODE
08/29/2011	ELECTRONIC

Please find below and/or attached an Office communication concerning this application or proceeding.

The time period for reply, if any, is set in the attached communication.

Notice of the Office communication was sent electronically on above-indicated "Notification Date" to the following e-mail address(es):

amalik@whepatent.com
eobrien@whepatent.com
USPTODOCK@whepatent.com

UNITED STATES PATENT AND TRADEMARK OFFICE

Commissioner for Patents
United States Patent and Trademark Office
P.O. Box 1450
Alexandria, VA 22313-1450
www.uspto.gov

AUG 2 6 2011

Wood, Herron & Evans, LLP (Vestas Wind Systems)
441 Vine Street
2700 Carew Tower
Cincinnati OH 45202

In re Application of	:	
JONAS KRISTENSEN	:	DECISION ON PETITION
Application No. 13/167,385	:	TO MAKE SPECIAL UNDER
Filed: June 23, 2011	:	THE GREEN TECHNOLOGY
Attorney Docket No. VWS-15CO	:	PILOT PROGRAM

This is a decision on the petition under 37 CFR 1.102, filed August 12, 2011 to make the above-identified application special under the pilot program for applications pertaining to Green Technologies as set forth in 74 Federal Register Notice 64666 (December 8, 2009) and amended by 75 Federal Register Notice 28554 (May 21, 2010) and 75 Federal Register Notice 69049 (November 10, 2010).

The petition is **DISMISSED**.

If reconsideration of this decision is desired, a petition for reconsideration must be filed within ONE (1) MONTH OR THIRTY (30) DAYS from the mail date of this decision, whichever is longer. No extension of this time limit can be granted under 37 CFR 1.136(a) or (b). The petition for reconsideration should include an exhaustive attempt to provide the lacking item(s) noted below, since, after a decision on the petition for reconsideration, no further reconsideration or review of the matter will be undertaken by the Director.

A grantable petition to make an application special under 37 CFR 1.102 and the pilot program as set forth in 74 FR 64666 must be directed to a nonprovisional application filed under 35 USC 111(a) or be a national stage entry under 35 USC 371, exclusive of any reissue applications.

In order to qualify for special status, the following requirements must be met. 1) The application must have no more than 3 independent claims and no more than 20 total claims. 2) The application must not contain any multiple dependent claims. 3) The petition must state the basis for seeking special status, i.e., the claimed invention either: A) materially enhances the quality of the environment or B) materially contributes to: i) the discovery or development of renewable energy resources, ii) the more efficient utilization and conservation of energy resources, or iii) greenhouse gas emission reduction. 4) If the disclosure is not clear on its face that the claimed invention materially contributes under category (A) or (B), the petition must be accompanied by a statement by the applicant, assignee, or an attorney/agent registered to practice before the

Office explaining how the materiality standard is met. 5) A statement that applicant will agree to make an election without traverse in a telephonic interview if a restriction requirement is made by the examiner. 6) The petition to make special must be filed electronically. 7) The petition must be filed at least one day prior to the date that a first Office Action appears in the Patent Application Information Retrieval (PAIR) system. 8) The petition must be accompanied by a request for early publication in compliance with 37 CFR 1.219 and include the publication fee as set forth in 37 CFR 1.18(d).

The requirement for a fee for consideration of the petition to make special for applications pertaining to Green Technologies has been waived.

The petition lacks item(s) 4.

In regard to item 4, the claimed tower, in and by itself, would not ordinarily contribute to the development of renewable energy resources -- the claimed tower cannot generate energy or convert kinetic energy from the wind into the mechanical energy into electrical energy. There is no evidence in the present application that the claimed tower and maintenance platform play any role in the operation of the wind turbine to convert wind energy into mechanical energy to produce electricity. There is also no evidence in the present application that the claimed tower/maintenance platform enhances the quality of the environment, or materially contributes to the development of renewable energy resources, and reduces greenhouse gas emission. In addition, as the claimed tower would not necessarily be used to support a wind turbine, petitioner's assertion of the claimed tower's contribution to the development of renewable energy resources is entirely speculative.
As stated in the notice, the materiality standard does not permit an applicant to speculate as to how a hypothetical end-user might specially apply the invention in a manner than could materially contribute to category (A) or (B). *Also see MPEP § 708.02 (VI).* Accordingly, it is not agreed that the application on its face meets that materiality standard.

Any reconsideration of this decision should be submitted through the USPTO electronic filing system, EFS-Web, and selecting the document description of "Petition for Green Tech Pilot" on the EFS-Web screen.

Telephone inquiries concerning this decision should be directed to Lanna Mai at 571-272-6867.

The application is being forwarded to the Technology Center Art Unit 3635 for action in its regular turn.

/Lanna Mai/

Lanna Mai
Quality Assurance Specialist
Technology Center 3600

UNITED STATES PATENT AND TRADEMARK OFFICE

UNITED STATES DEPARTMENT OF COMMERCE
United States Patent and Trademark Office
Address: COMMISSIONER FOR PATENTS
P.O. Box 1450
Alexandria, Virginia 22313-1450
www.uspto.gov

APPLICATION NO.	FILING DATE	FIRST NAMED INVENTOR	ATTORNEY DOCKET NO.	CONFIRMATION NO.
13/167,664	06/23/2011	Mitsuaki OYA	OKUDP0532USA	8546

51921 7590 07/12/2011
MARK D. SARALINO (PAN)
RENNER, OTTO, BOISSELLE & SKLAR, LLP
1621 EUCLID AVENUE
19TH FLOOR
CLEVELAND, OH 44115

EXAMINER

ART UNIT	PAPER NUMBER
2811	

MAIL DATE	DELIVERY MODE
07/12/2011	PAPER

Please find below and/or attached an Office communication concerning this application or proceeding.

The time period for reply, if any, is set in the attached communication.

UNITED STATES PATENT AND TRADEMARK OFFICE

Commissioner for Patents
United States Patent and Trademark Office
P.O. Box 1450
Alexandria, VA 22313-1450
www.uspto.gov

MARK D. SARALINO (PAN)
RENNER, OTTO, BOISSELLE & SKLAR, LLP
1621 EUCLID AVENUE
19TH FLOOR
CLEVELAND OH 44115

In re Application of	
OYA et al.	**: DECISION ON REQUEST TO**
Application No.: 13/167,664	**: PARTICIPATE IN THE PATENT**
Filed: 23 June 2011	**: PROSECUTION HIGHWAY**
Attorney Docket No.: OKUDP0532USA	**: PROGRAM AND PETITION**
For: NITRIDE SEMICONDUCTOR	**: TO MAKE SPECIAL UNDER**
ELEMENT AND METHOD FOR	**: 37 CFR 1.102(a)**
PRODUCING THE SAME	

This is a decision on the request to participate in the Patent Prosecution Highway (PPH) program and the petition under 37 CFR 1.102(a), filed 24 June 2011, to make the above-identified application special.

The request and petition are **GRANTED**.

Discussion

A grantable request to participate in the PPH pilot program and petition to make special require:

1. The U.S. application is

    a. a Paris Convention application which either
        i. validly claims priority under 35 U.S.C. 119(a) and 37 CFR 1.55 to one or more applications filed in the JPO, or
        ii. validly claims priority to a PCT application that contains no priority claims, or
    b. a national stage application under the PCT (an application which entered the national stage in the U.S. from a PCT international application after compliance with 35 U.S.C. 371), which PCT application
        i. validly claims priority to an application filed in the JPO, or
        ii. validly claims priority to a PCT application that contains no priority claims, or
        iii. contains no priority claim, or
    c. a so-called bypass application filed under 35 U.S.C. 111(a) which validly claims benefit under 35 U.S.C. 120 to a PCT application, which PCT application
        i. validly claims priority to an application filed in the JPO, or

ii. validly claims priority to a PCT application that contains no priority claims, or
iii. contains no priority claim;

2. Applicant must submit a copy of:
   a. The allowable/patentable claim(s) from the JPO application(s);
   b. An English translation of the allowable/patentable claim(s) and
   c. A statement that the English translation is accurate;
3. Applicant must:
   a. Ensure all the claims in the U.S. application must sufficiently correspond or be amended to sufficiently correspond to the allowable/patentable claim(s) in the JPO application(s) and
   b. Submit a claims correspondence table in English;
4. Examination of the U.S. application has <u>not</u> begun;
5. Applicant must submit:
   a. Documentation of prior office action:
      i. a copy of the office action(s) just prior to the "Decision to Grant a Patent" from each of the JPO application(s) containing the allowable/patentable claim(s) or
      ii. if the allowable/patentable claims(s) are from a "Notification of Reasons for Refusal" then the Notification of Reasons for Refusal or
      iii. if the JPO application is a first action allowance then no office action from the JPO is necessary should be indicated on the request/petition form;
   b. An English language translation of the JPO Office action from (5)(a)(i)-(ii) above
   c. A statement that the English translation is accurate;
6. Applicant must submit:
   a. An IDS listing the documents cited by the JPO examiner in the JPO office action (unless already submitted in this application)
   b. Copies of the documents except U.S. patents or U.S. patent application publications (unless already submitted in this application);

The request to participate in the PPH pilot program and petition comply with the above requirements. Accordingly, the above-identified application has been accorded "special" status.

Inquiries concerning this decision should be directed to Lee W. Young at 571-272-4549.

All other inquiries concerning the examination or status of the application is accessible in the PAIR system at http://www.uspto.gov/ebc.index.html.

This application will be forwarded to the examiner for action on the merits commensurate with this decision once this application's formality reviews have been completed.

Lee W. Young
TQAS, Technology Center 2800 – Semiconductors
Electrical & Optical Systems & Components

PTO/SB/20PCT-EP (01-10)
Approved for use through 01/31/2012. OMB 0651-0058
U.S. Patent and Trademark Office; U. S. DEPARTMENT OF COMMERCE
Under the Paperwork Reduction Act of 1995, no persons are required to respond to a collection of information unless it displays a valid OMB control number.

REQUEST FOR PARTICIPATION IN THE PATENT COOPERATION TREATY - PATENT PROSECUTION HIGHWAY (PCT-PPH) PILOT PROGRAM BETWEEN THE EUROPEAN PATENT OFFICE (EPO) AND THE USPTO

Application No:	13/167,789	Filing date:	June 24, 2011
First Named Inventor:	Thorsten Rinnert		
Title of the Invention:	Disposable Diapers		

THIS REQUEST FOR PARTICIPATION IN THE PCT-PPH PILOT PROGRAM ALONG WITH THE REQUIRED DOCUMENTS MUST BE SUBMITTED VIA EFS-WEB. INFORMATION REGARDING EFS-WEB IS AVAILABLE AT HTTP://WWW.USPTO.GOV/EBC/EFS_HELP.HTML

APPLICANT HEREBY REQUESTS PARTICIPATION IN THE PCT-PPH PROGRAM AND PETITIONS TO MAKE THE ABOVE-IDENTIFIED APPLICATION SPECIAL UNDER THE PCT-PPH PROGRAM.

The above-identified application is (1) a national stage entry of the corresponding PCT application, or (2) a national stage entry of another PCT application which claims priority to the corresponding PCT application, or (3) a national application that claims domestic/ foreign priority to the corresponding PCT application, or (4) a national application which forms the basis for the priority claim in the corresponding PCT application.

The corresponding PCT application number(s) is/are: PCT/US 2011/40623

The international date of the corresponding PCT application(s) is/are: June 16, 2011

I. List of Required Documents:

a. **A copy of the latest international work product (WO/ISA, WO/IPEA, or IPER) in the above-identified corresponding PCT application(s)**

☑ Is attached

☐ Is not attached because the document is already in the U.S. application.

b. **A copy of all claims which were indicated as having novelty, inventive step and industrial applicability in the above-identified corresponding PCT application(s).**

☑ Is attached.

☐ Is not attached because the document is already in the U.S. application.

c. **English translations of the documents in a. and b. above are attached (if the documents are not in the English language). A statement that the English translation is accurate is attached for the document in b. above.**

d. **(1) An information disclosure statement listing the documents cited in the international work products (ISR, WO/ISA, WO/IPEA, IPER) of the corresponding PCT application.**

☐ Is attached

☑ Has already been filed in the above-identified U.S. application on 6/24/2011, 11/3/2011

(2) Copies of all documents (except) for U.S. patents or U.S. patent application publications)

☐ Are attached.

☑ Have already been filed in the above-identified U.S. application on 11/3/2011

This collection of information is required by 35 U.S.C. 119, 37 CFR 1.55, and 37 CFR 1.102(d). The information is required to obtain or retain a benefit by the public, which is to file (and by the USPTO to process) an application. Confidentiality is governed by 35 U.S.C. 122 and 37 CFR 1.11 and 1.14. This collection is estimated to take 2 hours to complete, including gathering, preparing, and submitting the completed application form to the USPTO. Time will vary depending upon the individual case. Any comments on the amount of time you require to complete this form and/or suggestions for reducing this burden should be sent to the Chief Information Officer, U.S. Patent and Trademark Office, U.S. Department of Commerce, P.O. Box 1450, Alexandria, VA 22313-1450. DO NOT SEND FEES OR COMPLETED FORMS TO THIS ADDRESS.

Approved for use through 01/31/2012. OMB 0651-0058
U.S.Patent and Trademark Office; U.S. DEPARTMENT OF COMMERCE

Under the Paperwork Reduction Act of 1995, no persons are required to respond to a collection of information unless it displays a valid OMB control number.

REQUEST FOR PARTICIPATION IN THE PCT-PPH PILOT PROGRAM BETWEEN THE EPO AND THE USPTO

(continued)

Application No.:	13/167,789
First Named Inventor:	Thorsten Rinnert

II. Claims Correspondence Table:

Claims in US Application	Patentable Claims in the corresponding PCT Application	Explanation regarding the correspondence
1-15	1-15	US claims 1-15 recite the same elements as claims 1-15 of the
		corresponding PCT application, except
		- Multiple dependency has been removed from the US claims
		- Values recited in the PCT claims as a numerical value, e.g., "2mm"
		have been changed in the US claims to, e.g., "about 2mm". This change
		is not new matter; see specification at page 18, lines 19-23.

III. All the claims in the US application sufficiently correspond to the patentable claims in the corresponding PCT application.

IV. Payment of Fees:

The petition fee under 37 CFR 1.17(h) as required by 37 CFR 1.102(d) must be paid via EFS-Web (using credit card, authorization to charge a deposit account, or electronic funds transfer).

Signature	Date November 7, 2011
Name (Print/Typed) William E. Gallagher	Registration Number 35,145

UNITED STATES PATENT AND TRADEMARK OFFICE

UNITED STATES DEPARTMENT OF COMMERCE
United States Patent and Trademark Office
Address: COMMISSIONER FOR PATENTS
P.O. Box 1450
Alexandria, Virginia 22313-1450
www.uspto.gov

APPLICATION NO.	FILING DATE	FIRST NAMED INVENTOR	ATTORNEY DOCKET NO.	CONFIRMATION NO.
13/167,789	06/24/2011	Thorsten Rinnert	CM3620Q	8782

27752 7590 11/15/2011
THE PROCTER & GAMBLE COMPANY
Global Legal Department - IP
Sycamore Building - 4th Floor
299 East Sixth Street
CINCINNATI, OH 45202

EXAMINER

ART UNIT	PAPER NUMBER
3761	

MAIL DATE	DELIVERY MODE
11/15/2011	PAPER

Please find below and/or attached an Office communication concerning this application or proceeding.

The time period for reply, if any, is set in the attached communication.

UNITED STATES PATENT AND TRADEMARK OFFICE

Commissioner for Patents
United States Patent and Trademark Office
P.O. Box 1450
Alexandria, VA 22313-1450
www.uspto.gov

THE PROCTER & GAMBLE COMPANY
Global Legal Department - IP
Sycamore Building - 4th Floor
299 East Sixth Street
CINCINNATI OH 45202

In re Application of:
RINNERT, THORSTEN et al
Serial No.: 13/167,789
Filed: June 24, 2011
Attorney Docket No. : CM3620Q
Title: DISPOSABLE DIAPERS

DECISION ON A REQUEST TO PARTICIPATE IN PATENT PCT/PROSECUTION HIGHWAY PROGRAM AND PETITION TO MAKE SPECIAL UNDER CFR 1.102(a)

This is a decision on the request to participate in the Patent Prosecution Highway (PPH) program and the petition under 37 CFR 1.102(a), filed Nov. 7, 2011 to make the above-identified application special.

The request and petition are **granted**.

A grantable request to participate in the PPH pilot program and petition to make special require:

(1) The U.S. application must validly claim priority under 35 U.S.C. 119(a) to one or more PCT applications filed in the IPAU, JPO, EPO, KIPO, or USPTO;
(2) Applicant must submit a copy of the allowable/patentable claim(s) from the PCT application(s) latest international work product (the written opinion or the IPER) along with an English translation thereof and a statement that the English translation is accurate;
(3) All the claims in the U.S. application must sufficiently correspond or be amended to sufficiently correspond to the allowable/patentable claim(s) in the PCT application(s);
(4) Examination of the U.S. application has not begun;
(5) Applicant must submit a copy of the latest international work product from the PCT application containing the allowable/patentable claim(s) along with an English translation thereof and a statement that the English translation is accurate; and
(6) Applicant must submit an IDS listing the documents cited by the PCT examiner in the international work product along with copies of documents except U.S. patents or U.S. patent application publications.

In light of the petition being properly submitted, the request to participate in the PPH program and the petition comply with the above requirements. Accordingly, the above-identified application has been accorded "special" status.

The applicant is encouraged to cite and submit all relevant prior art references, if any, to facilitate examination in this application.

Response must be filed via EFS-Web. Telephone inquiries concerning this decision should be directed to Henry C. Yuen, at 571-272-4856.

Petition is **granted**.

/Henry C. Yuen/

Henry C. Yuen
Special Programs Examiner
Technology Center 3700
Tel: 571-272-4856

UNITED STATES PATENT AND TRADEMARK OFFICE

UNITED STATES DEPARTMENT OF COMMERCE
United States Patent and Trademark Office
Address: COMMISSIONER FOR PATENTS
P.O. Box 1450
Alexandria, Virginia 22313-1450
www.uspto.gov

APPLICATION NO.	FILING DATE	FIRST NAMED INVENTOR	ATTORNEY DOCKET NO.	CONFIRMATION NO.
13/167,865	06/24/2011	Mitsuaki OYA	OKUDP0523USA	8940

51921 7590 07/12/2011
MARK D. SARALINO (PAN)
RENNER, OTTO, BOISSELLE & SKLAR, LLP
1621 EUCLID AVENUE
19TH FLOOR
CLEVELAND, OH 44115

EXAMINER

ART UNIT	PAPER NUMBER
2811	

MAIL DATE	DELIVERY MODE
07/12/2011	PAPER

Please find below and/or attached an Office communication concerning this application or proceeding.

The time period for reply, if any, is set in the attached communication.

UNITED STATES PATENT AND TRADEMARK OFFICE

Commissioner for Patents
United States Patent and Trademark Office
P.O. Box 1450
Alexandria, VA 22313-1450
www.uspto.gov

MARK D. SARALINO (PAN)
RENNER, OTTO, BOISSELLE & SKLAR, LLP
1621 EUCLID AVENUE
19TH FLOOR
CLEVELAND OH 44115

In re Application of	
OYA et al.	**: DECISION ON REQUEST TO**
Application No.: 13/167,865	**: PARTICIPATE IN THE PATENT**
Filed: 24 June 2011	**: PROSECUTION HIGHWAY**
Attorney Docket No.: OKUDP0523USA	**: PROGRAM AND PETITION**
For: NITRIDE-BASED	**: TO MAKE SPECIAL UNDER**
SEMICONDUCTOR DEVICE AND	**: 37 CFR 1.102(a)**
METHOD FOR FABRICATING THE	
SAME	

This is a decision on the request to participate in the Patent Prosecution Highway (PPH) program and the petition under 37 CFR 1.102(a), filed 24 June 2011, to make the above-identified application special.

The request and petition are **DISMISSED**.

A grantable request to participate in the PPH program and petition to make special require:

1. The U.S. application must validly claim priority under 35 U.S.C. 119(a) to one or more applications filed in the JPO, note where the JPO application with similar claims is not the same application from which the U.S. application claims priority then the applicant must identify the relationship between the JPO application with similar claims and the JPO priority application;

2. Applicant must submit a copy of:
   a. The allowable/patentable claim(s) from the JPO application(s) or if a copy of the allowable/patentable claims is available via the Dossier Access System (DAS) applicant may request the USPTO obtain a copy from the DAS, however if the USPTO is unable to obtain a copy from the DAS the applicant will be required to submit a copy;
   b. An English translation of the allowable/patentable claim(s) and
   c. A statement that the English translation is accurate;

3. Applicant must

a. Ensure all the claims in the U.S. application must sufficiently correspond or be amended to sufficiently correspond to the allowable/patentable claim(s) in the JPO application(s) and
b. Submit a claims correspondence table in English;

4. Examination of the U.S. application has not begun;

5. Applicant must submit:
   a. Documentation of prior office action:
      i. a copy of the office action(s) just prior to the "Decision to Grant a Patent" from each of the JPO application(s) containing the allowable/patentable claim(s) or
      ii. if the allowable/patentable claims(s) are from a "Notification of Reasons for Refusal" then the Notification of Reasons for Refusal or
      iii. if the JPO application is a first action allowance then no office action from the JPO is necessary should be indicated on the request/petition form;

      Further, if a copy of the documents from a or b above is available via the Dossier Access System (DAS) applicant may request the USPTO obtain a copy from the DAS, however if the USPTO is unable to obtain a copy from the DAS the applicant will be required to submit a copy;
   b. An English language translation of the JPO Office action from (5)(a)(i)-(ii) above
   c. A statement that the English translation is accurate (if the translation is not a machine translation provided by the JPO);

6. Applicant must submit:
   a. An IDS listing the documents cited by the JPO examiner in the JPO office action (unless already submitted in this application)
   b. Copies of the documents except U.S. patents or U.S. patent application publications (unless already submitted in this application);

Conditions (1-2) and (4-6) above are considered to have been met. However, the request to participate in the PPH pilot program and petition fails meet condition (3).

Regarding the requirement of condition (3), applicant has failed to ensure that all the claims in the U.S. application sufficiently correspond to the allowable/patentable claims in the JPO application. For example, US claim 1 requires a "p-type GaN-based semiconductor region" while JP claim 1 only requires a "p-type semiconductor region." US claim 1 is narrower in scope than JP claim 1. The PPH agreement with JPO allows for claims of narrower scope in the US application but the narrower claims must be presented in dependent form. It is applicant's responsibility to ensure that all the claims in the US application sufficiently correspond to the allowable/patentable claims in the JPO application.

Applicant is given <u>ONE</u> opportunity within a time period of **ONE MONTH or THIRTY DAYS**, whichever is longer, from the mailing date of this decision to correct the deficiencies. **NO EXTENSION OF TIME UNDER 37 CFR 1.136 IS PERMITTED.** If the deficiencies are not corrected with the time period given, the application will await action in its regular turn.

Response must be filed via the Electronic Filing System (EFS) using the document description: Petition to make special under Patent Pros Hwy. Any preliminary amendments and IDS submitted with the PPH documents must be separately indexed as a preliminary amendment and IDS, respectively.

Telephone inquiries concerning this decision should be directed to Lee W. Young at 571-272-4549.

All other inquiries concerning the examination or status of the application is accessible in the PAIR system at http://www.uspto.gov/ebc/index.html.

Lee W. Young
TQAS Technology Center 2800

UNITED STATES PATENT AND TRADEMARK OFFICE

UNITED STATES DEPARTMENT OF COMMERCE
United States Patent and Trademark Office
Address: COMMISSIONER FOR PATENTS
P.O. Box 1450
Alexandria, Virginia 22313-1450
www.uspto.gov

APPLICATION NO.	FILING DATE	FIRST NAMED INVENTOR	ATTORNEY DOCKET NO.	CONFIRMATION NO.
13/167,865	06/24/2011	Mitsuaki OYA	OKUDP0523USA	8940

51921 7590 10/11/2011
MARK D. SARALINO (PAN)
RENNER, OTTO, BOISSELLE & SKLAR, LLP
1621 EUCLID AVENUE
19TH FLOOR
CLEVELAND, OH 44115

EXAMINER

ART UNIT	PAPER NUMBER
2811	

MAIL DATE	DELIVERY MODE
10/11/2011	PAPER

Please find below and/or attached an Office communication concerning this application or proceeding.

The time period for reply, if any, is set in the attached communication.

UNITED STATES PATENT AND TRADEMARK OFFICE

Commissioner for Patents
United States Patent and Trademark Office
P.O. Box 1450
Alexandria, VA 22313-1450
www.uspto.gov

MARK D. SARALINO (PAN)
RENNER, OTTO, BOISSELLE & SKLAR, LLP
1621 EUCLID AVENUE
19TH FLOOR
CLEVELAND OH 44115

In re Application of	
OYA et al.	
Application No.: 13/167,865	**: DECISION ON REQUEST TO**
Filed: 24 June 2011	**: PARTICIPATE IN THE PATENT**
Attorney Docket No.: OKUDP0523USA	**: PROSECUTION HIGHWAY**
For: NITRIDE-BASED	**: PROGRAM AND PETITION**
SEMICONDUCTOR DEVICE AND	**: TO MAKE SPECIAL UNDER**
METHOD FOR FABRICATING THE	**: 37 CFR 1.102(a)**
SAME	

This is a decision on the request to participate in the Patent Prosecution Highway (PPH) program and the petition under 37 CFR 1.102(a), filed 24 June 2011 and renewed 27 July 2011, to make the above-identified application special.

The request and petition are **GRANTED**.

Discussion

A grantable request to participate in the PPH pilot program and petition to make special require:

1. The U.S. application is

    a. a Paris Convention application which either
        i. validly claims priority under 35 U.S.C. 119(a) and 37 CFR 1.55 to one or more applications filed in the JPO, or
        ii. validly claims priority to a PCT application that contains no priority claims, or
    b. a national stage application under the PCT (an application which entered the national stage in the U.S. from a PCT international application after compliance with 35 U.S.C. 371), which PCT application
        i. validly claims priority to an application filed in the JPO, or
        ii. validly claims priority to a PCT application that contains no priority claims, or
        iii. contains no priority claim, or

c. a so-called bypass application filed under 35 U.S.C. 111(a) which validly claims benefit under 35 U.S.C. 120 to a PCT application, which PCT application
    i. validly claims priority to an application filed in the JPO, or
    ii. validly claims priority to a PCT application that contains no priority claims, or
    iii. contains no priority claim;

2. Applicant must submit a copy of:
    a. The allowable/patentable claim(s) from the JPO application(s);
    b. An English translation of the allowable/patentable claim(s) and
    c. A statement that the English translation is accurate;
3. Applicant must:
    a. Ensure all the claims in the U.S. application must sufficiently correspond or be amended to sufficiently correspond to the allowable/patentable claim(s) in the JPO application(s) and
    b. Submit a claims correspondence table in English;
4. Examination of the U.S. application has <u>not</u> begun;
5. Applicant must submit:
    a. Documentation of prior office action:
        i. a copy of the office action(s) just prior to the "Decision to Grant a Patent" from each of the JPO application(s) containing the allowable/patentable claim(s) or
        ii. if the allowable/patentable claims(s) are from a "Notification of Reasons for Refusal" then the Notification of Reasons for Refusal or
        iii. if the JPO application is a first action allowance then no office action from the JPO is necessary should be indicated on the request/petition form;
    b. An English language translation of the JPO Office action from (5)(a)(i)-(ii) above
    c. A statement that the English translation is accurate;
6. Applicant must submit:
    a. An IDS listing the documents cited by the JPO examiner in the JPO office action (unless already submitted in this application)
    b. Copies of the documents except U.S. patents or U.S. patent application publications (unless already submitted in this application);

The request to participate in the PPH pilot program and petition comply with the above requirements. Accordingly, the above-identified application has been accorded "special" status.

Inquiries concerning this decision should be directed to Colleen Dunn at 571-272-1170.

All other inquiries concerning the examination or status of the application is accessible in the PAIR system at http://www.uspto.gov/ebc.index.html.

This application will be forwarded to the examiner for action on the merits commensurate with this decision once this application's formality reviews have been completed.

/Colleen Dunn/

Colleen Dunn
Quality Assurance Specialist
Technology Center 2800

Doc Code: PET.GREEN
Document Description: Petition for Green Tech Pilot

PTO/SB/420 (03-11)

PETITION TO MAKE SPECIAL UNDER THE GREEN TECHNOLOGY PILOT PROGRAM

Attorney Docket Number: 245016-1	Application Number (if known): 13/167,885	Filing date: June 24, 2011

First Named Inventor: Sheri George

Title: SYSTEM AND METHOD FOR MONITORING STRESS ON A WIND TURBINE BLADE

APPLICANT HEREBY REQUESTS TO PARTICIPATE IN THE GREEN TECHNOLOGY PILOT PROGRAM FOR THE ABOVE-IDENTIFIED APPLICATION. See Instruction Sheet on page 2.

This petition must be timely filed electronically using the USPTO electronic filing system, EFS-Web.

1. By filing this petition:

   Applicant is requesting early publication: Applicant hereby requests early publication under 37 CFR 1.219 and the publication fee set forth in 37 CFR 1.18(d) accompanies this request.

2. By filing this petition: applicant is agreeing to make an election without traverse in a telephonic interview and elect an invention that meets the eligibility requirements for the Green Technology Pilot Program, if the Office determines that the claims are not obviously directed to a single invention. See Instruction Sheet.

3. This request is accompanied by statements of special status for the eligibility requirement.

4. The application contains no more than three (3) independent claims and twenty (20) total claims.

5. The application does not contain any multiple dependent claims.

6. Other attachments: Statement Concerning the Basis for the Special Status

Signature /Allison W. Mages/	Date October 11, 2011
Name (Print/Typed) Allison W. Mages	Registration Number 57,275

Note: Signatures of all the inventors or assignees of record of the entire interest or their representative(s) are required in accordance with 37 CFR 1.33 and 11.18. Please see 37 CFR 1.4(d) for the form of the signature. If necessary, submit multiple forms for more than one signature, see below.*

☐ *Total of _____ forms are submitted.

If you need assistance in completing the form, call 1-800-PTO-9199 and select option 2.

IN THE UNITED STATES PATENT AND TRADEMARK OFFICE

First Named Inventor: Sheri George	)
Confirmation No.: 8981	)
	)
Serial No.: 13/167,885	)
	)
Filing Date: June 24, 2011	)
	)
Atty Docket No.: 245016-1	)

VIA EFS
Commissioner for Patents
P.O. Box 1450
Alexandria, VA 22313-1450

Statement Concerning the Basis for the Special Status

SIR:

The invention relates generally to qualification of wind turbine blades, and more specifically, to techniques for stress/ damage monitoring of wind turbine blade during dynamic testing. (See [0001]).

Applicant respectfully submits that Special Status is sought on the basis that the present invention materially contributes to the discovery or development of renewable energy resources.

The undersigned representative may be contacted at the number below to facilitate the resolution of any matters. Please charge any fees that are incurred in connection with this Statement to deposit account no. 09-0470.

Respectfully submitted,

General Electric Company

By : /Allison W. Mages/
Allison W. Mages
Reg. No. 57,275

Dated: October 11, 2011

GE Global Patent Operation
2 Corporate Drive, Suite 648
Shelton, CT 06484
203-944-6730

UNITED STATES PATENT AND TRADEMARK OFFICE

UNITED STATES DEPARTMENT OF COMMERCE
United States Patent and Trademark Office
Address: COMMISSIONER FOR PATENTS
P.O. Box 1450
Alexandria, Virginia 22313-1450
www.uspto.gov

APPLICATION NO.	FILING DATE	FIRST NAMED INVENTOR	ATTORNEY DOCKET NO.	CONFIRMATION NO.
13/167,885	06/24/2011	Sheri George	245016-1	8981

6147 7590 10/20/2011
GENERAL ELECTRIC COMPANY
GLOBAL RESEARCH
ONE RESEARCH CIRCLE
BLDG. K1-3A59
NISKAYUNA, NY 12309

EXAMINER

ART UNIT	PAPER NUMBER
2482	

NOTIFICATION DATE	DELIVERY MODE
10/20/2011	ELECTRONIC

Please find below and/or attached an Office communication concerning this application or proceeding.

The time period for reply, if any, is set in the attached communication.

Notice of the Office communication was sent electronically on above-indicated "Notification Date" to the following e-mail address(es):

ldocket@crd.ge.com
wahld@ge.com
haeckl@ge.com

UNITED STATES PATENT AND TRADEMARK OFFICE

Commissioner for Patents
United States Patent and Trademark Office
P.O. Box 1450
Alexandria, VA 22313-1450
www.uspto.gov

MAILED

OCT 19 2011

DIRECTOR OFFICE
TECHNOLOGY CENTER 2400

Allison W. Mages
GENERAL ELECTRIC COMPANY
GLOBAL RESEARCH
ONE RESEARCH CIRCLE
BLDG. K1-3A59
NISKAYUNA NY 12309

In re Application of	:	
George, Sheri	:	DECISION ON PETITION
Application No. 13/167,885	:	TO MAKE SPECIAL UNDER
Filed: June 24, 2011	:	THE GREEN TECHNOLOGY
Attorney Docket No. 245016-1	:	PILOT PROGRAM

Title: SYSTEM AND METHOD FOR MONITORING STRESS ON A WIND TURBINE BLADE

This is a decision on the petition under 37 CFR § 1.102, filed **October 11, 2011** make the above-identified application special under the pilot program for applications pertaining to Green Technologies as set forth in 74 Federal Register Notice 64666 (December 8, 2009) and amended by 75 Federal Register Notice 28554 (May 21, 2010).

The petition is **GRANTED**.

A grantable petition to make an application special under 37 CFR § 1.102 and the pilot program as set forth in 74 FR 64666 must be directed to a nonprovisional application filed under 35 USC 111(a) or be a national stage entry under 35 USC 371, exclusive of any reissue applications and be filed prior or after December 8, 2009 (Fed. Reg., vol. 75, no. 217, Nov 10, 2010).

In order to qualify for special status, the following requirements must be met. 1) The application must have no more than 3 independent claims and no more than 20 total claims. 2) The application must not contain any multiple dependent claims. 3) The petition must state the basis for seeking special status, i.e., the claimed invention either: A) materially enhances the quality of the environment or B) materially contributes to: i) the discovery or development of renewable energy resources, ii) the more efficient utilization and conservation of energy resources, or iii) greenhouse gas emission reduction. 4) If the disclosure is not clear on its face that the claimed invention materially contributes under category (A) or (B), the petition must be accompanied by a statement by the applicant, assignee, or an attorney/agent registered to practice before the Office explaining how the materiality standard is met. 5) A statement that applicant will agree to make an election without traverse in a telephonic interview if a restriction requirement is made

by the examiner. 6) The petition to make special must be filed electronically. 7) The petition must be filed at least one day prior to the date that a first Office Action appears in the Patent Application Information Retrieval (PAIR) system. 8) The petition must be accompanied by a request for early publication in compliance with 37 CFR § 1.219 and include the publication fee as set forth in 37 CFR §1.18(d).

The requirement for a fee for consideration of the petition to make special for applications pertaining to Green Technologies has been waived. .

The instant petition complies with items 1 – 8 above. Accordingly, the above-identified application has been accorded "**special**" status.

Telephone inquires concerning this decision should be directed to Beatriz Prieto at 571-272-3902.

The application is being forwarded to the Technology Center Art Unit 2482 for action on the merits commensurate with this decision.

/Beatriz Prieto/

Beatriz Prieto
Quality Assurance Specialist
Technology Center 2400

UNITED STATES PATENT AND TRADEMARK OFFICE

Commissioner for Patents
United States Patent and Trademark Office
P.O. Box 1450
Alexandria, VA 22313-1450
www.uspto.gov

In re Application of
John David Bacchiaz

Application No. 13167904

Filed:

Attorney Docket No. 9300-3 (251123)

:DECISION ON PETITION TO MAKE SPECIAL
:UNDER 37 CFR 1.102(c)(1)

This is a decision on the electronic petition under 37 CFR 1.102 (c)(1), filed 28-JUN-2011 to make the above-identified application special based on applicant's age as set forth in MPEP § 708.02, Section IV.

The petition is **GRANTED**.

A grantable petition to make an application special under 37 CFR 1.102(c)(1), MPEP § 708.02, Section IV: Applicant's Age must include a statement by applicant or a registered practitioner having evidence that applicant is at least 65 years of age. No fee is required.

Accordingly, the above-identified application has been accorded "special" status and will be taken up for action by the examiner upon the completion of all pre-examination processing.

Telephone inquiries concerning this electronic decision should be directed to the Electronic Business Center at 866-217-9197.

All other inquiries concerning either the examination or status of the application should be directed to the Technology Center.

Doc code : PET.OP.AGE
Description : Petition to make special based on Age/Health

PTO/SB/130 (07-09)
Approved for use through 07/31/2012. OMB 0651- 0031
U.S. Patent and Trademark Office; U.S. DEPARTMENT OF COMMERCE
Under the Paperwork Reduction Act of 1995, no persons are required to respond to a collection of information unless it contains a valid OMB control number

PETITION TO MAKE SPECIAL BASED ON AGE FOR ADVANCEMENT OF EXAMINATION UNDER 37 CFR 1.102(c)(1)

Application Information

Application Number	13167904	Confirmation Number	9023	Filing Date	2011-06-24
Attorney Docket Number (optional)	9300-3 (251123)	Art Unit		Examiner	
First Named Inventor	BACCHIAZ				
Title of Invention	BIOMETRIC KEY				

Attention: Office of Petitions
An application may be made special for advancement of examination upon filing of a petition showing that the applicant is 65 years of age, or more. No fee is required with such a petition. See 37 CFR 1.102(c)(1) and MPEP 708.02 (IV).

APPLICANT HEREBY PETITIONS TO MAKE SPECIAL FOR ADVANCEMENT OF EXAMINATION IN THIS APPLICATION UNDER 37 CFR 1.102(c)(1) and MPEP 708.02 (IV) ON THE BASIS OF THE APPLICANT'S AGE.

A grantable petition requires one of the following items:
(1) Statement by one named inventor in the application that he/she is 65 years of age, or more; or
(2) Certification by a registered attorney/agent having evidence such as a birth certificate, passport, driver's license, etc. showing one named inventor in the application is 65 years of age, or more.

Name of Inventor who is 65 years of age, or older

Given Name	Middle Name	Family Name	Suffix
JOHN	DAVID	BACCHIAZ	

A signature of the applicant or representative is required in accordance with 37 CFR 1.33 and 10.18.
Please see 37 CFR 1.4(d) for the format of the signature.

Select (1) or (2) :

○ (1) I am an inventor in this application and I am 65 years of age, or more.

● (2) I am an attorney or agent registered to practice before the Patent and Trademark Office, and I certify that I am in possession of evidence, and will retain such in the application file record, showing that the inventor listed above is 65 years of age, or more.

Signature	/Mark D. Passler/	Date (YYYY-MM-DD)	2011-06-27
Name	Mark D. Passler	Registration Number	40764

PTO/SB/130 (07-09)
Approved for use through 07/31/2012. OMB 0651- 0031
U.S. Patent and Trademark Office; U.S. DEPARTMENT OF COMMERCE
Under the Paperwork Reduction Act of 1995, no persons are required to respond to a collection of information unless it contains a valid OMB control number

Privacy Act Statement

The Privacy Act of 1974 (P.L. 93-579) requires that you be given certain information in connection with your submission of the attached form related to a patent application or patent. Accordingly, pursuant to the requirements of the Act, please be advised that: (1) the general authority for the collection of this information is 35 U.S.C. 2(b)(2); (2) furnishing of the information solicited is voluntary; and (3) the principal purpose for which the information is used by the U.S. Patent and Trademark Office is to process and/or examine your submission related to a patent application or patent. If you do not furnish the requested information, the U.S. Patent and Trademark Office may not be able to process and/or examine your submission, which may result in termination of proceedings or abandonment of the application or expiration of the patent.

The information provided by you in this form will be subject to the following routine uses:

1. The information on this form will be treated confidentially to the extent allowed under the Freedom of Information Act (5 U.S.C. 552) and the Privacy Act (5 U.S.C. 552a). Records from this system of records may be disclosed to the Department of Justice to determine whether the Fr eedom of Information Act requires disclosure of these records.

2. A record from this system of records may be disclosed, as a routine use, in the course of presenting evidence to a court, magistrate, or administrative tribunal, including disclosures to opposing counsel in the course of settlement negotiations.

3. A record in this system of records may be disclosed, as a routine use, to a Member of Congress submitting a request involving an individual, to whom the record pertains, when the individual has requested assistance from the Member with respect to the subject matter of the record.

4. A record in this system of records may be disclosed, as a routine use, to a contractor of the Agency having need for the information in order to perform a contract. Recipients of information shall be required to comply with the requirements of the Privacy Act of 1974, as amended, pursuant to 5 U.S.C. 552a(m).

5. A record related to an International Application filed under the Patent Cooperation Treaty in this system of records may be disclosed, as a routine use, to the International Bureau of the World Intellectual Property Organization, pursuant to the Patent Cooperation Treaty.

6. A record in this system of records may be disclosed, as a routine use, to another federal agency for purposes of National Security review (35 U.S.C. 181) and for review pursuant to the Atomic Energy Act (42 U.S.C. 218(c)).

7. A record from this system of records may be disclosed, as a routine use, to the Administrator, General Services, or his/her designee, during an inspection of records conducted by GSA as part of that agency's responsibility to recommend improvements in records management practices and programs, under authority of 44 U.S.C. 2904 and 2906. Such disclosure shall be made in accordance with the GSA regulations governing inspection of records for this purpose, and any other relevant (i.e., GSA or Commerce) directive. Such disclosure shall not be used to make determinations about indivi duals.

8. A record from this system of records may be disclosed, as a routine use, to the public after either publication of the application pursuant to 35 U.S.C. 122(b) or issuance of a patent pursuant to 35 U.S.C. 151. Further, a record may be disclosed, subject to the limitations of 37 CFR 1.14, as a routine use, to the public if the record was filed in an application which became abandoned or in which the proceedings were terminated and which application is referenced by either a published application, an application open to public inspections or an issued patent.

9. A record from this system of records may be disclosed, as a routine use, to a Federal, State, or local law enforcement agency, if the USPTO becomes aware of a violation or potential violation of law or regulation.

Doc Code: PET.GREEN
Document Description: Petition for Green Tech Pilot

PTO/SB/420 (03-11)

PETITION TO MAKE SPECIAL UNDER THE GREEN TECHNOLOGY PILOT PROGRAM

Attorney Docket Number: 245016-2	Application Number (if known): 13/167,931	Filing date: June 24, 2011

First Named Inventor: Sheri George

Title: SYSTEM AND METHOD FOR DETERMINING LIFETIME OF WIND TURBINE BLADE

APPLICANT HEREBY REQUESTS TO PARTICIPATE IN THE GREEN TECHNOLOGY PILOT PROGRAM FOR THE ABOVE-IDENTIFIED APPLICATION. See Instruction Sheet on page 2.

This petition must be timely filed electronically using the USPTO electronic filing system, EFS-Web.

1. By filing this petition:

   Applicant is requesting early publication: Applicant hereby requests early publication under 37 CFR 1.219 and the publication fee set forth in 37 CFR 1.18(d) accompanies this request.

2. By filing this petition: applicant is agreeing to make an election without traverse in a telephonic interview and elect an invention that meets the eligibility requirements for the Green Technology Pilot Program, if the Office determines that the claims are not obviously directed to a single invention. See Instruction Sheet.

3. This request is accompanied by statements of special status for the eligibility requirement.

4. The application contains no more than three (3) independent claims and twenty (20) total claims.

5. The application does not contain any multiple dependent claims.

6. Other attachments: Statement Concerning the Basis for the Special Status

Signature /Allison W. Mages/	Date October 11, 2011
Name (Print/Typed) Allison W. Mages	Registration Number 57,275

Note: *Signatures of all the inventors or assignees of record of the entire interest or their representative(s) are required in accordance with 37 CFR 1.33 and 11.18. Please see 37 CFR 1.4(d) for the form of the signature. If necessary, submit multiple forms for more than one signature, see below*.*

☐ *Total of _____ forms are submitted.

If you need assistance in completing the form, call 1-800-PTO-9199 and select option 2.

IN THE UNITED STATES PATENT AND TRADEMARK OFFICE

First Named Inventor: Sheri George	)
Confirmation No.: 9066	)
	)
Serial No.: 13/167,931	)
	)
Filing Date: June 24, 2011	)
	)
Atty Docket No.: 245016-2	)

VIA EFS
Commissioner for Patents
P.O. Box 1450
Alexandria, VA 22313-1450

Statement Concerning the Basis for the Special Status

SIR:

The invention relates generally to non-destructive evaluation of wind turbine blades, and more specifically, to stress measurements techniques. (See [0001]).

Applicant respectfully submits that Special Status is sought on the basis that the present invention materially contributes to the discovery or development of renewable energy resources.

The undersigned representative may be contacted at the number below to facilitate the resolution of any matters. Please charge any fees that are incurred in connection with this Statement to deposit account no. 09-0470.

Respectfully submitted,

General Electric Company

By : /Allison W. Mages/
Allison W. Mages
Reg. No. 57,275

Dated: October 11, 2011

GE Global Patent Operation
2 Corporate Drive, Suite 648
Shelton, CT 06484
203-944-6730

UNITED STATES PATENT AND TRADEMARK OFFICE

UNITED STATES DEPARTMENT OF COMMERCE
United States Patent and Trademark Office
Address: COMMISSIONER FOR PATENTS
P.O. Box 1450
Alexandria, Virginia 22313-1450
www.uspto.gov

APPLICATION NO.	FILING DATE	FIRST NAMED INVENTOR	ATTORNEY DOCKET NO.	CONFIRMATION NO.
13/167,931	06/24/2011	Sheri George	245016-2	9066

6147 7590 10/27/2011
GENERAL ELECTRIC COMPANY
GLOBAL RESEARCH
ONE RESEARCH CIRCLE
BLDG. K1-3A59
NISKAYUNA, NY 12309

EXAMINER

ART UNIT	PAPER NUMBER
2857	

NOTIFICATION DATE	DELIVERY MODE
10/27/2011	ELECTRONIC

Please find below and/or attached an Office communication concerning this application or proceeding.

The time period for reply, if any, is set in the attached communication.

Notice of the Office communication was sent electronically on above-indicated "Notification Date" to the following e-mail address(es):

ldocket@crd.ge.com
wahld@ge.com
haeckl@ge.com

UNITED STATES PATENT AND TRADEMARK OFFICE

Commissioner for Patents
United States Patent and Trademark Office
P.O. Box 1450
Alexandria, VA 22313-1450
www.uspto.gov

GENERAL ELECTRIC COMPANY
GLOBAL RESEARCH
ONE RESEARCH CIRCLE
BLDG. K1-3A59
NISKAYUNA NY 12309

In re Application of	:	
Sheri GEORGE	:	DECISION ON PETITION
Application No. 13/167,931	:	TO MAKE SPECIAL UNDER
Filed: June 24, 2011	:	THE GREEN TECHNOLOGY
Attorney Docket No. 245016-2	:	PILOT PROGRAM

This is a decision on the petition under 37 CFR 1.102, filed on October 11, 2011, to make the above-identified application special under the pilot program for applications pertaining to Green Technologies as set forth 74 Federal Register Notice 64666 (December 8, 2009) and amended by 75 Federal Register Notice 28554 (May 21, 2010) and 75 Federal Register Notice 69049 (November 10, 2010).

The petition is **GRANTED**.

A grantable petition to make an application special under 37 CFR 1.102 and the pilot program as set forth in 74 FR 64666 must be directed to a nonprovisional application filed under 35 USC 111(a) or be a national stage entry under 35 USC 371, exclusive of any reissue applications.

In order to qualify for special status, the following requirements must be met. 1) The application must have no more than 3 independent claims and no more than 20 total claims. 2) The application must not contain any multiple dependent claims. 3) The petition must state the basis for seeking special status, i.e., the claimed invention either: A) materially enhances the quality of the environment or B) materially contributes to: i) the discovery or development of renewable energy resources, ii) the more efficient utilization and conservation of energy resources, or iii) greenhouse gas emission reduction. 4) If the disclosure is not clear on its face that the claimed invention materially contributes under category (A) or (B), the petition must be accompanied by a statement by the applicant, assignee, or an attorney/agent registered to practice before the Office explaining how the materiality standard is met. 5) A statement that applicant will agree to make an election without traverse in a telephonic interview if a restriction requirement is made by the examiner. 6) The petition to make special must be filed electronically. 7) The petition must be filed at least one day prior to the date that a first Office Action appears in the Patent Application Information Retrieval (PAIR) system. 8) The petition must be accompanied by a request for early publication in compliance with 37 CFR 1.219 and include the publication fee as set forth in 37 CFR 1.18(d).

The requirement for a fee for consideration of the petition to make special for applications pertaining to Green Technologies has been waived.

The instant petition complies with items 1 – 8 above. Accordingly, the above-identified application has been accorded "special" status.

Telephone inquiries concerning this decision should be directed to Lee W. Young at 571-272-4549.

The application is being forwarded to the Technology Center Art Unit 2857 for action on the merits commensurate with this decision.

Lee W. Young
Quality Assurance Specialist
Technology Center 2600

UNITED STATES PATENT AND TRADEMARK OFFICE

UNITED STATES DEPARTMENT OF COMMERCE
United States Patent and Trademark Office
Address: COMMISSIONER FOR PATENTS
P.O. Box 1450
Alexandria, Virginia 22313-1450
www.uspto.gov

APPLICATION NO.	FILING DATE	FIRST NAMED INVENTOR	ATTORNEY DOCKET NO.	CONFIRMATION NO.
13/167,977	06/24/2011	Christian Laursen	2010P07174US	9163

22116 7590 10/14/2011
SIEMENS CORPORATION
INTELLECTUAL PROPERTY DEPARTMENT
170 WOOD AVENUE SOUTH
ISELIN, NJ 08830

EXAMINER

ART UNIT	PAPER NUMBER
3633	

MAIL DATE	DELIVERY MODE
10/14/2011	PAPER

Please find below and/or attached an Office communication concerning this application or proceeding.

The time period for reply, if any, is set in the attached communication.

UNITED STATES PATENT AND TRADEMARK OFFICE

Commissioner for Patents
United States Patent and Trademark Office
P.O. Box 1450
Alexandria, VA 22313-1450
www.uspto.gov

OCT 14 2011

SIEMENS CORPORATION
INTELLECTUAL PROPERTY DEPARTMENT
170 WOOD AVENUE SOUTH
ISELIN NJ 08830

In re application of	:	**DECISION ON REQUEST TO**
Christian Laursen	:	**PARTICIPATE IN PATENT**
Application No. 13/167,977	:	**PROSECUTION HIGHWAY**
Filed: June 24, 2011	:	**PROGRAM AND PETITION**
For: WIND TURBINE TOWER	:	**TO MAKE SPECIAL UNDER**
	:	**37 CFR 1.102(a)**

This is a decision on the request to participate in the Patent Prosecution Highway (PPH) program and the petition under 37 CFR 1.102(a), filed June 24, 2011, to make the above-identified application special.

The request and petition are **GRANTED**.

A grantable request to participate in the PPH program and petition to make special require:

(1) The U.S. application must validly claim priority under 35 U.S.C. 119(a) to one or more applications filed in the EPO;
(2) Applicant must submit a copy of the allowable/patentable claim(s) from the EPO application(s) along with an English translation thereof and a statement that the English translation is accurate;
(3) All the claims in the U.S. application must sufficiently correspond or be amended to sufficiently correspond to the allowable/patentable claim(s) in the EPO application(s);
(4) Examination of the U.S. application has not begun;
(5) Applicant must submit a copy of the latest Office action from each of the EPO application(s) containing the allowable/patentable claim(s) along with an English translation thereof and a statement that the English translation is accurate;
(6) Applicant must submit an IDS listing the documents cited by the EPO examiner in the EPO Office action along with copies of documents except U.S. patents or U.S. patent application publications.

In light of the preliminary amendment filed on June 24, 2011. The request to participate in the PPH pilot program complies with the above requirements. Therefore, the above-identified application has been accorded "special" status.

All other inquiries concerning the examination or status of the application should be directed to the Patent Application Information Retrieval (PAIR) system.

The application is being forwarded to the examiner for action on the merits commensurate with this decision.

Any inquiry regarding this decision should be directed to Mikado Buiz, Quality Assurance Specialist, at (571) 272-6578.

/ Mikado Buiz /

Mikado Buiz,
Quality Assurance Specialist
Technology Center 3600

MB/MB: 10/13/11

Doc Code: PET.GREEN
Document Description: Petition for Green Tech Pilot

PTO/SB/420 (03-11)

PETITION TO MAKE SPECIAL UNDER THE GREEN TECHNOLOGY PILOT PROGRAM

Attorney Docket Number: 250271-1	Application Number (if known): 13/168,207	Filing date: 06-24-2011

First Named Inventor: Russell Weldon Black

Title: NON-BONDED ROTARY SEMICONDUCTING TARGETS AND METHODS OF THEIR SPUTTERING

APPLICANT HEREBY REQUESTS TO PARTICIPATE IN THE GREEN TECHNOLOGY PILOT PROGRAM FOR THE ABOVE-IDENTIFIED APPLICATION. See Instruction Sheet on page 2.

This petition must be timely filed electronically using the USPTO electronic filing system, EFS-Web.

1. By filing this petition:

   Applicant is requesting early publication: Applicant hereby requests early publication under 37 CFR 1.219 and the publication fee set forth in 37 CFR 1.18(d) accompanies this request.

2. By filing this petition: applicant is agreeing to make an election without traverse in a telephonic interview and elect an invention that meets the eligibility requirements for the Green Technology Pilot Program, if the Office determines that the claims are not obviously directed to a single invention. See Instruction Sheet.

3. This request is accompanied by statements of special status for the eligibility requirement.

4. The application contains no more than three (3) independent claims and twenty (20) total claims.

5. The application does not contain any multiple dependent claims.

6. Other attachments: Statement Concerning the Basis for the Special Status

Signature /Allison W. Mages/	Date 11-10-2011
Name (Print/Typed) Allison W. Mages	Registration Number 57,275

Note: Signatures of all the inventors or assignees of record of the entire interest or their representative(s) are required in accordance with 37 CFR 1.33 and 11.18. Please see 37 CFR 1.4(d) for the form of the signature. If necessary, submit multiple forms for more than one signature, see below.*

☐ *Total of _____ forms are submitted.

If you need assistance in completing the form, call 1-800-PTO-9199 and select option 2.

IN THE UNITED STATES PATENT AND TRADEMARK OFFICE

First Named Inventor: Russell Weldon Black	)
Confirmation No.: 9619	)
	)
Serial No.: 13/168,207	)
	)
Filing Date: 06-24-2011	)
	)
Atty Docket No.: 250271-1	)

VIA EFS
Commissioner for Patents
P.O. Box 1450
Alexandria, VA 22313-1450

Statement Concerning the Basis for the Special Status

SIR:

The application relates generally to non-bonded, semiconducting targets and their use during sputtering of a semiconducting layer on a substrate. (See [0001])

Thin film photovoltaic (PV) modules (also referred to as "solar panels") based on cadmium telluride (CdTe) paired with cadmium sulfide (CdS) as the photo-reactive components are gaining wide acceptance and interest in the industry. CdTe is a semiconductor material having characteristics particularly suited for conversion of solar energy to electricity. For example, CdTe has an energy bandgap of about 1.45 eV, which enables it to convert more energy from the solar spectrum as compared to lower bandgap semiconductor materials historically used in solar cell applications (e.g., about 1.1 eV for silicon). Also, CdTe converts radiation energy in lower or diffuse light conditions as compared to the lower bandgap materials and, thus, has a longer effective conversion time

over the course of a day or in cloudy conditions as compared to other conventional materials. (See [0002])

The junction of the n-type layer and the p-type layer is generally responsible for the generation of electric potential and electric current when the CdTe PV module is exposed to light energy, such as sunlight. Specifically, the cadmium telluride (CdTe) layer and the cadmium sulfide (CdS) form a p-n heterojunction, where the CdTe layer acts as a p-type layer (i.e., an electron accepting layer) and the CdS layer acts as a n-type layer (i.e., an electron donating layer). Free carrier pairs are created by light energy and then separated by the p-n heterojunction to produce an electrical current. (See [0003])

The CdS layer, along with other layers (e.g., a transparent conductive oxide layer of cadmium tin oxide) can be formed via a sputtering process (also know as physical vapor deposition) where the source material is supplied from a semiconducting target (e.g., cadmium sulfide, cadmium tin oxide, etc.). Typically, the cadmium sulfide semiconducting target is bonded to a backing plate that is water cooled and then placed into magnetrons (cathodes) that perform the sputtering action. The semiconducting target is typically bonded to the backing plate using indium solder or a conductive epoxy. The bond provides good thermal and electrical contact between the semiconducting target and the water cooled backing plate. Thus, the heat created by the plasma on the opposite side of the semiconducting target can be dissipated and carried away from the target by the water cooled backing plate. (See [0004])

As the semiconducting target is sputtered, the semiconducting material is eroded from the target. As the semiconducting target erodes, nodules form on the surface of the target that, over time, may change the deposition rate during sputtering and could affect the characteristics of the resulting thin film. Additionally, these nodules can cause arcs to form in the sputtering chamber. These variables created after sputtering over an extended period can lead to thin film variances of the deposited semiconducting layers in a large-scale, manufacturing environment, such as during the commercial manufacture of cadmium telluride based thin film photovoltaic devices. Thus, a need exists for a more uniform sputtering process for the deposition of substantially uniform layers. (See [0005]-[0006])

Rotary sputtering cathodes are generally provided in this application. The cathode generally includes a tubular member having a length in a longitudinal direction and defining an external surface, a first longitudinal bracket extending in the longitudinal direction along the length of the tubular member, and a second longitudinal bracket extending in the longitudinal direction along the length of the tubular member. Additional longitudinal brackets (e.g., a third, fourth, fifth, and so forth,) may also be included along the length of the tubular member. A target, which comprises a sputtering material and defines a sputtering surface and a back surface that is opposite the sputtering surface, can be positioned such that its back surface is facing the external surface of the tubular member. The first longitudinal bracket and the second longitudinal bracket removably hold the first

target therebetween such that the first back surface of the first target is facing the external surface of the tubular member. (See [0008])

Methods are also generally provided for sputtering a non-bonded target. First, a sputtering target can be removably inserted into a rotary sputtering cathode between a first bracket and a second bracket to expose a sputtering surface of the sputtering target. The sputtering cathode comprises a tubular member defining an external surface such that the sputtering target is positioned adjacent to the external surface and is non-bonded thereto. Then, the sputtering surface of the sputtering target can be contacted with a plasma such that atoms are ejected from the sputtering surface of the sputtering target. (See [0009])

Therefore, Applicant respectfully submits that Special Status is sought on the basis that the present invention materially contributes to the discovery or development of renewable energy resources or materially contributes to the more efficient utilization and conservation of energy resources.

The undersigned representative may be contacted at the number below to facilitate the resolution of any matters. Please charge any fees that are incurred in connection with this Statement to deposit account no. 09-0470.

Respectfully submitted,

General Electric Company

By : /Allison W. Mages/
Allison W. Mages
Reg. No. 57,275

Dated: November 10, 2011

GE Global Patent Operation
2 Corporate Drive, Suite 648
Shelton, CT 06484
203-944-6730

UNITED STATES PATENT AND TRADEMARK OFFICE

UNITED STATES DEPARTMENT OF COMMERCE
United States Patent and Trademark Office
Address: COMMISSIONER FOR PATENTS
P.O. Box 1450
Alexandria, Virginia 22313-1450
www.uspto.gov

APPLICATION NO.	FILING DATE	FIRST NAMED INVENTOR	ATTORNEY DOCKET NO.	CONFIRMATION NO.
13/168,207	06/24/2011	Russell Weldon Black	250271/PRSS-68	9619

93081 7590 11/17/2011
Dority & Manning, P.A. and Primestar Solar Inc.
Post Office Box 1449
Greenville, SC 29602

EXAMINER

ART UNIT	PAPER NUMBER
1724	

MAIL DATE	DELIVERY MODE
11/17/2011	PAPER

Please find below and/or attached an Office communication concerning this application or proceeding.

The time period for reply, if any, is set in the attached communication.

UNITED STATES PATENT AND TRADEMARK OFFICE

Commissioner for Patents
United States Patent and Trademark Office
P.O. Box 1450
Alexandria, VA 22313-1450
www.uspto.gov

Dority & Manning, P.A. and Primestar Solar Inc.
Post Office Box 1449
Greenville SC 29602

11/17/11

In re Application of	:	
Black	:	DECISION ON PETITION
Application No. 13/168,207	:	TO MAKE SPECIAL UNDER
Filed: 6/24/2011	:	THE GREEN TECHNOLOGY
Attorney Docket No. **250271/PRSS-68**	:	PILOT PROGRAM

This is a decision on the petition under 37 CFR 1.102, filed 11/10/2011, to make the above-identified application special under the pilot program for applications pertaining to Green Technologies as set forth in 74 Federal Register Notice 64666 (December 8, 2009) and amended by 75 Federal Register Notice 28554 (May 21, 2010) and 75 Federal Register Notice 69049 (November 10, 2010).

The petition is **DISMISSED**.

If reconsideration of this decision is desired, a petition for reconsideration must be filed within ONE (1) MONTH OR THIRTY (30) DAYS from the mail date of this decision, whichever is longer. No extension of this time limit can be granted under 37 CFR 1.136(a) or (b). The petition for reconsideration should include an exhaustive attempt to provide the lacking item(s) noted below, since, after a decision on the petition for reconsideration, no further reconsideration or review of the matter will be undertaken by the Director.

A grantable petition to make an application special under 37 CFR 1.102 and the pilot program as set forth in 74 FR 64666 must be directed to a nonprovisional application filed under 35 USC 111(a) or be a national stage entry under 35 USC 371, exclusive of any reissue applications.

In order to qualify for special status, the following requirements must be met. 1) The application must have no more than 3 independent claims and no more than 20 total claims. 2) The application must not contain any multiple dependent claims. 3) The petition must state the basis for seeking special status, i.e., the claimed invention either: A) materially enhances the quality of the environment or B) materially contributes to: i) the discovery or development of renewable energy resources, ii) the more efficient utilization and conservation of energy resources, or iii) greenhouse gas emission reduction. 4) If the disclosure is not clear on its face that the claimed invention materially contributes under category (A) or (B), the petition must be accompanied by a statement by the applicant, assignee, or an attorney/agent registered to practice before the

Office explaining how the materiality standard is met. 5) A statement that applicant will agree to make an election without traverse in a telephonic interview if a restriction requirement is made by the examiner. 6) The petition to make special must be filed electronically. 7) The petition must be filed at least one day prior to the date that a first Office Action appears in the Patent Application Information Retrieval (PAIR) system. 8) The petition must be accompanied by a request for early publication in compliance with 37 CFR 1.219 and include the publication fee as set forth in 37 CFR 1.18(d).

The requirement for a fee for consideration of the petition to make special for applications pertaining to Green Technologies has been waived.

The petition lacks item(s) 4.

In regard to item 4, petitioner should note that the instant petition includes a statement identifying the basis for the special status (i.e., whether the instant invention (1) materially enhances the quality of the environment or materially contributes to (2) development of renewable energy resources or energy conservation, or (3) greenhouse gas reduction) as required by sections II and III of the notice. However, as stated in the notice, applicant must also provide a statement pertaining to the materiality standard if the application disclosure is not clear on its face as to the materiality of the basis for the special status of the invention. It is not agreed that the application on its face meets that materiality standard.

Applicants state that the application is directed to the sputtering of solar panels. The instant claims however are merely directed to a method for sputtering a target and a sputtering cathode. There is no mention of solar panels in the instant claims and the specification states that "the material of the target 12 can be made of any sputtering material that a user wishes to sputter deposit onto a given surface. For example, the target 12 can be constructed of any sputtering material and may be particularly useful for refractory, ceramic, and/or semiconductor materials." (See [0028]). The materiality standard does not permit an applicant to speculate how an end user might specifically apply the invention in a manner that could materially contribute to (1) materially enhancing the quality of the environment or materially contributing to (2) development of renewable energy resources or energy conservation, or (3) greenhouse gas reduction.

Any reconsideration of this decision should be submitted through the USPTO electronic filing system, EFS-Web, and selecting the document description of "Petition for Green Tech Pilot" on the EFS-Web screen.

Telephone inquiries concerning this decision should be directed to Tom Dunn at 571-272-1171.

The application is being forwarded to the Technology Center Art Unit 1724 for action in its regular turn.

/Tom Dunn/

Tom Dunn
Quality Assurance Specialist
Technology Center 1700

IN THE UNITED STATES PATENT AND TRADEMARK OFFICE

First Named Inventor: Russell Weldon BLACK	)
Confirmation No.: 9619	)
	)
Serial No.: 13/168,207	)
	)
Filing Date: 06-24-2011	)
	)
Atty Docket No.: 205271-1 (PRSS-68)	)

Commissioner for Patents
P.O. Box 1450
Alexandria, VA 22313-1450

Request for Reconsideration

SIR:

This is responsive to the Decision on Petition, dated as mailed 17 November 2011, in the above-referenced application.

Applicant respectfully requests reconsideration of Applicant's Petition to Make Special on the basis that the present invention materially contributes to the development of renewable energy resources.

The Decision to Make Special Under the Green Technology Pilot Program (hereinafter "the Decision") states that the instant claims are merely directed to a method for sputtering a target and a sputtering cathode. The Decision states that there is no mention of solar panels in the claims and the specification states that "the material of the target 12 can be made of any sputtering material that a user wishes to sputter deposit onto a given surface. For example, the target 12 can be constructed of any sputtering material and may be particularly useful for refractory, ceramic, and/or semiconductor materials." The Decision further implies that Applicant speculates as to how an end user might specially apply the

invention in a manner that could materially contribute to materially enhancing the quality of the environment or materially contributing to development of renewable energy resources or energy conservation or greenhouse gas reduction. Applicant does not agree with the comments made in the Decision.

Applicant respectfully submits that embodiments of the present invention relate generally to non-bonded, semiconducting targets and their use during sputtering of a semiconducting layer on a substrate. (see at least paragraph [0001]). As noted in the present application, embodiments of the present invention are particularly associated with the production of thin film photovoltaic (PV) modules, also referred to as "solar panels". (see at least paragraph [0002]).

Thin film photovoltaic (PV) modules (also referred to as "solar panels") based on cadmium telluride (CdTe) paired with cadmium sulfide (CdS) as the photo-reactive components are gaining wide acceptance and interest in the industry. CdTe is a semiconductor material having characteristics particularly suited for conversion of solar energy to electricity. For example, CdTe has an energy bandgap of about 1.45 eV, which enables it to convert more energy from the solar spectrum as compared to lower bandgap semiconductor materials historically used in solar cell applications (e.g., about 1.1 eV for silicon). Also, CdTe converts radiation energy in lower or diffuse light conditions as compared to the lower bandgap materials and, thus, has a longer effective conversion time over the course of a day or in cloudy conditions as compared to other conventional materials. (see at least paragraph [0002]).

The junction of the n-type layer and the p-type layer is generally responsible for the generation of electric potential and electric current when the CdTe PV module is exposed to light energy, such as sunlight. Specifically, the cadmium telluride (CdTe) layer and the cadmium sulfide (CdS) form a p-n heterojunction, where the CdTe layer acts as a p-type layer (i.e., an electron accepting layer) and the CdS layer acts as a n-type layer (i.e., an electron donating layer). Free carrier pairs are created by light energy and then separated by the p-n heterojunction to produce an electrical current. (see at least paragraph [0003]).

The CdS layer, along with other layers (e.g., a transparent conductive oxide layer of cadmium tin oxide) can be formed via a sputtering process (also know as physical vapor deposition) where the source material is supplied from a semiconducting target (e.g., cadmium sulfide, cadmium tin oxide, etc.). Typically, the cadmium sulfide semiconducting target is bonded to a backing plate that is water cooled and then placed into magnetrons (cathodes) that perform the sputtering action. The semiconducting target is typically bonded to the backing plate using indium solder or a conductive epoxy. The bond provides good thermal and electrical contact between the semiconducting target and the water cooled backing plate. Thus, the heat created by the plasma on the opposite side of the semiconducting target can be dissipated and carried away from the target by the water cooled backing plate. (see at least paragraph [0004]).

As the semiconducting target is sputtered, the semiconducting material is eroded from the target. As the semiconducting target erodes, nodules form on

the surface of the target that, over time, may change the deposition rate during sputtering and could affect the characteristics of the resulting thin film. Additionally, these nodules can cause arcs to form in the sputtering chamber. These variables created after sputtering over an extended period can lead to thin film variances of the deposited semiconducting layers in a large-scale, manufacturing environment, such as during the commercial manufacture of cadmium telluride based thin film photovoltaic devices. (see at least paragraph [0005]). The success of solar panels becoming an accepted source of primary or secondary power on a large commercial or residential scale is dependent upon, among other things, the cost of producing the solar panels, which inevitably affects the final cost per kilowatt of solar energy to consumers. Any benefit in the manufacturing process of the solar panels that can reduce the cost of production is important.

Embodiments of the present invention provide sputtering cathodes and methods for sputtering a non-bonded target. The cathode generally includes a tubular member having a length in a longitudinal direction and defining an external surface, a first longitudinal bracket extending in the longitudinal direction along the length of the tubular member, and a second longitudinal bracket extending in the longitudinal direction along the length of the tubular member. Additional longitudinal brackets (e.g., a third, fourth, fifth, and so forth,) may also be included along the length of the tubular member. A target, which comprises a sputtering material and defines a sputtering surface and a back surface that is opposite the sputtering surface, can be positioned such that its back surface is

facing the external surface of the tubular member. The first longitudinal bracket and the second longitudinal bracket removably hold the first target therebetween such that the first back surface of the first target is facing the external surface of the tubular member. (see at least paragraph [0008]).

Methods are also generally provided for sputtering a non-bonded target. First, a sputtering target can be removably inserted into a rotary sputtering cathode between a first bracket and a second bracket to expose a sputtering surface of the sputtering target. The sputtering cathode comprises a tubular member defining an external surface such that the sputtering target is positioned adjacent to the external surface and is non-bonded thereto. Then, the sputtering surface of the sputtering target can be contacted with a plasma such that atoms are ejected from the sputtering surface of the sputtering target. (see at least paragraph [0009]).

Embodiments of the present invention provide sputtering cathodes and methods for sputtering a non-bonded target in which the non-bonded cadmium sulfide target can be sputtered at a lower power setting than typically required for an otherwise identical, but bonded target, while still achieving substantially the same deposition rate. Additionally, the non-bonded cadmium sulfide target can be easily interchanged upon depletion, resulting in significant time and cost savings. (see at least paragraph [0028]). Embodiments of the present invention promote efficient production of PV modules on a large scale and in a cost effective manner. By reducing costs associated with the fabrication of solar cells, embodiments of the present invention reduce costs associated with producing

solar energy. As such, embodiments of the present invention incentivize the creation and adoption of solar energy resources, and contribute to the development of renewable energy resources.

The undersigned attorney may be contacted at the number below to facilitate the resolution of any matters. Please charge any fees that are incurred in connection with this Statement to deposit account no. 09-0470.

Respectfully submitted,

General Electric Company

By : /Allison W Mages/
Allison Weiner Mages
Reg. No. 57,275

Dated: December 17, 2011

GE Global Patent Operation
2 Corporate Drive, Suite 648
Shelton, CT 06484
203-944-6730

UNITED STATES PATENT AND TRADEMARK OFFICE

UNITED STATES DEPARTMENT OF COMMERCE
United States Patent and Trademark Office
Address: COMMISSIONER FOR PATENTS
P.O. Box 1450
Alexandria, Virginia 22313-1450
www.uspto.gov

APPLICATION NO.	FILING DATE	FIRST NAMED INVENTOR	ATTORNEY DOCKET NO.	CONFIRMATION NO.
13/168,207	06/24/2011	Russell Weldon Black	250271/PRSS-68	9619

93081 7590 01/06/2012
Dority & Manning, P.A. and Primestar Solar Inc.
Post Office Box 1449
Greenville, SC 29602

EXAMINER

ART UNIT	PAPER NUMBER
1724	

MAIL DATE	DELIVERY MODE
01/06/2012	PAPER

Please find below and/or attached an Office communication concerning this application or proceeding.

The time period for reply, if any, is set in the attached communication.

UNITED STATES PATENT AND TRADEMARK OFFICE

Commissioner for Patents
United States Patent and Trademark Office
P.O. Box 1450
Alexandria, VA 22313-1450
www.uspto.gov

Dority & Manning, P.A. and Primestar Solar Inc.
Post Office Box 1449
Greenville SC 29602

1/6/12

In re Application of	:	
Black	:	DECISION ON PETITION
Application No. 13/168,207	:	TO MAKE SPECIAL UNDER
Filed: 6/24/2011	:	THE GREEN TECHNOLOGY
Attorney Docket No. **250271/PRSS-68**	:	PILOT PROGRAM

This is a decision on the request for reconsideration, filed 12/16/2011, to make the above-identified application special under the pilot program for applications pertaining to Green Technologies as set forth 74 Federal Register Notice 64666 (December 8, 2009).

The petition is **DENIED**.

A grantable petition to make an application special under 37 CFR 1.102 and the pilot program as set forth in 74 FR 64666 must be directed to a nonprovisional application filed under 35 USC 111(a) or be a national stage entry under 35 USC 371, exclusive of any reissue applications and be filed prior to the date of the notice, December 8, 2009.

In order to qualify for special status, the following requirements must be met. 1) The application must have no more than 3 independent claims and no more than 20 total claims. 2) The application must not contain any multiple dependent claims. 3) The petition must state the basis for seeking special status, i.e., the claimed invention either: A) materially enhances the quality of the environment or B) materially contributes to: i) the discovery or development of renewable energy resources, ii) the more efficient utilization and conservation of energy resources, or iii) greenhouse gas emission reduction. 4) If the disclosure is not clear on its face that the claimed invention materially contributes under category (A) or (B), the petition must be accompanied by a statement by the applicant, assignee, or an attorney/agent registered to practice before the Office explaining how the materiality standard is met. 5) A statement that applicant will agree to make an election without traverse in a telephonic interview if a restriction requirement is made by the examiner. 6) The petition to make special must be filed electronically. 7) The petition must be filed at least one day prior to the date that a first Office Action appears in the Patent Application Information Retrieval (PAIR) system. 8) The petition must be accompanied by a request for early publication in compliance with 37 CFR 1.219 and include the publication fee as set forth in 37 CFR 1.18(d).

The requirement for a fee for consideration of the petition to make special for applications pertaining to Green Technologies has been waived.

The petition lacks item(s) 4.

In regard to item 4, petitioner should note that the instant petition includes a statement identifying the basis for the special status (i.e., whether the instant invention (1) materially enhances the quality of the environment or materially contributes to (2) development of renewable energy resources or energy conservation, or (3) greenhouse gas reduction) as required by sections II and III of the notice. However, as stated in the notice, applicant must also provide a statement pertaining to the materiality standard if the application disclosure is not clear on its face as to the materiality of the basis for the special status of the invention. It is not agreed that the application on its face meets that materiality standard.

Applicants argue that embodiments of the present invention relate generally to non-bonded, semiconducting targets and their use during sputtering of a semiconducting layer on a substrate. Applicant continues to point out that the specification discloses embodiments that are associated with the production of thin film photovoltaic modules.

Applicant is directed to the original Federal Register Notice (12/8/2009) which states in part under Section I (Requirements): (4) The **claims** must be directed to a single invention that materially enhances the quality of the environment, or that materially contributes to : (1) The discovery or development of renewable energy resources; (2) the more efficient utilization and conservation of energy resources; or (3) greenhouse gas emission reduction... (emphasis added)

Applicants are correct that the specification discloses embodiments relating to photovoltaic modules, however as stated above the **claims** are silent with respect to photovoltaic modules. The claims are therefore open to other embodiments including those that are not photovoltaic related. The materiality standard does not permit an applicant to speculate how an end user might specifically apply the invention in a manner that could materially contribute to (1) materially enhancing the quality of the environment or materially contributing to (2) development of renewable energy resources or energy conservation, or (3) greenhouse gas reduction.

Any reconsideration of this decision should be submitted through the USPTO electronic filing system, EFS-Web, and selecting the document description of "Petition for Green Tech Pilot" on the EFS-Web screen.

Telephone inquiries concerning this decision should be directed to Tom Dunn at 571-272-1171.

The application is being forwarded to the Technology Center Art Unit 1724 for action in its regular turn.

/Tom Dunn/

Tom Dunn
Quality Assurance Specialist
Technology Center 1700

Doc Code: PET.GREEN
Document Description: Petition for Green Tech Pilot

PTO/SB/420 (03-11)

PETITION TO MAKE SPECIAL UNDER THE GREEN TECHNOLOGY PILOT PROGRAM

Attorney Docket Number: 249333	Application Number (if known): 13/168,307	Filing date: June 24, 2011

First Named Inventor: Andreas Schubert

Title: HUB ASSEMBLY FOR USE WITH A WIND TURBINE AND METHOD OF MAKING THE SAME

APPLICANT HEREBY REQUESTS TO PARTICIPATE IN THE GREEN TECHNOLOGY PILOT PROGRAM FOR THE ABOVE-IDENTIFIED APPLICATION. See Instruction Sheet on page 2.

This petition must be timely filed electronically using the USPTO electronic filing system, EFS-Web.

1. By filing this petition:

   Applicant is requesting early publication: Applicant hereby requests early publication under 37 CFR 1.219 and the publication fee set forth in 37 CFR 1.18(d) accompanies this request.

2. By filing this petition: applicant is agreeing to make an election without traverse in a telephonic interview and elect an invention that meets the eligibility requirements for the Green Technology Pilot Program, if the Office determines that the claims are not obviously directed to a single invention. See Instruction Sheet.

3. This request is accompanied by statements of special status for the eligibility requirement.

4. The application contains no more than three (3) independent claims and twenty (20) total claims.

5. The application does not contain any multiple dependent claims.

6. Other attachments: Statement Concerning the Basis for the Special Status

Signature /Allison W. Mages/	Date October 10, 2011
Name (Print/Typed) Allison W. Mages	Registration Number 57,275

***Note**: Signatures of all the inventors or assignees of record of the entire interest or their representative(s) are required in accordance with 37 CFR 1.33 and 11.18. Please see 37 CFR 1.4(d) for the form of the signature. If necessary, submit multiple forms for more than one signature, see below*.*

☐ *Total of _____ forms are submitted.

If you need assistance in completing the form, call 1-800-PTO-9199 and select option 2.

IN THE UNITED STATES PATENT AND TRADEMARK OFFICE

First Named Inventor: Andreas Schubert	)
Confirmation No.: 9789	)
	)
Serial No.: 13/168,307	)
	)
Filing Date: June 24, 2011	)
	)
Atty Docket No.: 249333	)

VIA EFS
Commissioner for Patents
P.O. Box 1450
Alexandria, VA 22313-1450

Statement Concerning the Basis for the Special Status

SIR:

The present invention relate generally to a hub assembly and, more particularly, to a hub assembly for use with a wind turbine. (See [0001]).

Applicant respectfully submits that Special Status is sought on the basis that the present invention materially contributes to the discovery or development of renewable energy resources.

The undersigned representative may be contacted at the number below to facilitate the resolution of any matters. Please charge any fees that are incurred in connection with this Statement to deposit account no. 09-0470.

Respectfully submitted,

General Electric Company

By : /Allison W. Mages/
Allison W. Mages
Reg. No. 57,275

Dated: October 10, 2011

GE Global Patent Operation
2 Corporate Drive, Suite 648
Shelton, CT 06484
203-944-6730

Doc code : PET.OP.AGE
Description : Petition to make special based on Age/Health

PTO/SB/130 (07-09)
Approved for use through 07/31/2012. OMB 0651- 0031
U.S. Patent and Trademark Office; U.S. DEPARTMENT OF COMMERCE
Under the Paperwork Reduction Act of 1995, no persons are required to respond to a collection of information unless it contains a valid OMB control number

PETITION TO MAKE SPECIAL BASED ON AGE FOR ADVANCEMENT OF EXAMINATION UNDER 37 CFR 1.102(c)(1)

Application Information

Application Number	13/168,366	Confirmation Number	9894	Filing Date	2011-06-24
Attorney Docket Number (optional)	12	Art Unit	2834	Examiner	
First Named Inventor	Dantam Rao				
Title of Invention	Thermally conductive ground wall insulation for a stator bar				

Attention: Office of Petitions
An application may be made special for advancement of examination upon filing of a petition showing that the applicant is 65 years of age, or more. No fee is required with such a petition. See 37 CFR 1.102(c)(1) and MPEP 708.02 (IV).

APPLICANT HEREBY PETITIONS TO MAKE SPECIAL FOR ADVANCEMENT OF EXAMINATION IN THIS APPLICATION UNDER 37 CFR 1.102(c)(1) and MPEP 708.02 (IV) ON THE BASIS OF THE APPLICANT'S AGE.

A grantable petition requires one of the following items:
(1) Statement by one named inventor in the application that he/she is 65 years of age, or more; or
(2) Certification by a registered attorney/agent having evidence such as a birth certificate, passport, driver's license, etc. showing one named inventor in the application is 65 years of age, or more.

Name of Inventor who is 65 years of age, or older

Given Name	Middle Name	Family Name	Suffix
Dantam	K.	Rao	

A signature of the applicant or representative is required in accordance with 37 CFR 1.33 and 10.18.
Please see 37 CFR 1.4(d) for the format of the signature.

Select (1) or (2) :

- (●) (1) I am an inventor in this application and I am 65 years of age, or more.
- ( ) (2) I am an attorney or agent registered to practice before the Patent and Trademark Office, and I certify that I am in possession of evidence, and will retain such in the application file record, showing that the inventor listed above is 65 years of age, or more.

Signature	/Dantam Rao/	Date (YYYY-MM-DD)	2011-07-06
Name	Dantam Rao		

PTO/SB/130 (07-09)
Approved for use through 07/31/2012. OMB 0651- 0031
U.S. Patent and Trademark Office; U.S. DEPARTMENT OF COMMERCE
Under the Paperwork Reduction Act of 1995, no persons are required to respond to a collection of information unless it contains a valid OMB control number

Privacy Act Statement

The Privacy Act of 1974 (P.L. 93-579) requires that you be given certain information in connection with your submission of the attached form related to a patent application or patent. Accordingly, pursuant to the requirements of the Act, please be advised that: (1) the general authority for the collection of this information is 35 U.S.C. 2(b)(2); (2) furnishing of the information solicited is voluntary; and (3) the principal purpose for which the information is used by the U.S. Patent and Trademark Office is to process and/or examine your submission related to a patent application or patent. If you do not furnish the requested information, the U.S. Patent and Trademark Office may not be able to process and/or examine your submission, which may result in termination of proceedings or abandonment of the application or expiration of the patent.

The information provided by you in this form will be subject to the following routine uses:

1. The information on this form will be treated confidentially to the extent allowed under the Freedom of Information Act (5 U.S.C. 552) and the Privacy Act (5 U.S.C. 552a). Records from this system of records may be disclosed to the Department of Justice to determine whether the Fr eedom of Information Act requires disclosure of these records.

2. A record from this system of records may be disclosed, as a routine use, in the course of presenting evidence to a court, magistrate, or administrative tribunal, including disclosures to opposing counsel in the course of settlement negotiations.

3. A record in this system of records may be disclosed, as a routine use, to a Member of Congress submitting a request involving an individual, to whom the record pertains, when the individual has requested assistance from the Member with respect to the subject matter of the record.

4. A record in this system of records may be disclosed, as a routine use, to a contractor of the Agency having need for the information in order to perform a contract. Recipients of information shall be required to comply with the requirements of the Privacy Act of 1974, as amended, pursuant to 5 U.S.C. 552a(m).

5. A record related to an International Application filed under the Patent Cooperation Treaty in this system of records may be disclosed, as a routine use, to the International Bureau of the World Intellectual Property Organization, pursuant to the Patent Cooperation Treaty.

6. A record in this system of records may be disclosed, as a routine use, to another federal agency for purposes of National Security review (35 U.S.C. 181) and for review pursuant to the Atomic Energy Act (42 U.S.C. 218(c)).

7. A record from this system of records may be disclosed, as a routine use, to the Administrator, General Services, or his/her designee, during an inspection of records conducted by GSA as part of that agency's responsibility to recommend improvements in records management practices and programs, under authority of 44 U.S.C. 2904 and 2906. Such disclosure shall be made in accordance with the GSA regulations governing inspection of records for this purpose, and any other relevant (i.e., GSA or Commerce) directive. Such disclosure shall not be used to make determinations about indivi duals.

8. A record from this system of records may be disclosed, as a routine use, to the public after either publication of the application pursuant to 35 U.S.C. 122(b) or issuance of a patent pursuant to 35 U.S.C. 151. Further, a record may be disclosed, subject to the limitations of 37 CFR 1.14, as a routine use, to the public if the record was filed in an application which became abandoned or in which the proceedings were terminated and which application is referenced by either a published application, an application open to public inspections or an issued patent.

9. A record from this system of records may be disclosed, as a routine use, to a Federal, State, or local law enforcement agency, if the USPTO becomes aware of a violation or potential violation of law or regulation.

UNITED STATES PATENT AND TRADEMARK OFFICE

Commissioner for Patents
United States Patent and Trademark Office
P.O. Box 1450
Alexandria, VA 22313-1450
www.uspto.gov

In re Application of
Dantam K. Rao

Application No. 13168366

Filed: June 24,2011

Attorney Docket No. 12

:DECISION ON PETITION TO MAKE SPECIAL
:UNDER 37 CFR 1.102(c)(1)

This is a decision on the electronic petition under 37 CFR 1.102 (c)(1), filed 06-JUL-2011 to make the above-identified application special based on applicant's age as set forth in MPEP § 708.02, Section IV.

The petition is **GRANTED**.

A grantable petition to make an application special under 37 CFR 1.102(c)(1), MPEP § 708.02, Section IV: Applicant's Age must include a statement by applicant or a registered practitioner having evidence that applicant is at least 65 years of age. No fee is required.

Accordingly, the above-identified application has been accorded "special" status and will be taken up for action by the examiner upon the completion of all pre-examination processing.

Telephone inquiries concerning this electronic decision should be directed to the Electronic Business Center at 866-217-9197.

All other inquiries concerning either the examination or status of the application should be directed to the Technology Center.

Doc code : PET.OP.AGE
Description : Petition to make special based on Age/Health

PTO/SB/130 (07-09)
Approved for use through 07/31/2012. OMB 0651- 0031
U.S. Patent and Trademark Office; U.S. DEPARTMENT OF COMMERCE
Under the Paperwork Reduction Act of 1995, no persons are required to respond to a collection of information unless it contains a valid OMB control number

PETITION TO MAKE SPECIAL BASED ON AGE FOR ADVANCEMENT OF EXAMINATION UNDER 37 CFR 1.102(c)(1)

Application Information

Application Number	13168556	Confirmation Number	1268	Filing Date	2011-06-24
Attorney Docket Number (optional)	W0537-700920	Art Unit	2624	Examiner	
First Named Inventor	Kenneth P. Weiss				
Title of Invention	METHOD AND APPARATUS FOR SECURE ACCESS PAYMENT AND IDENTIFICATION				

Attention: Office of Petitions
An application may be made special for advancement of examination upon filing of a petition showing that the applicant is 65 years of age, or more. No fee is required with such a petition. See 37 CFR 1.102(c)(1) and MPEP 708.02 (IV).

APPLICANT HEREBY PETITIONS TO MAKE SPECIAL FOR ADVANCEMENT OF EXAMINATION IN THIS APPLICATION UNDER 37 CFR 1.102(c)(1) and MPEP 708.02 (IV) ON THE BASIS OF THE APPLICANT'S AGE.

A grantable petition requires one of the following items:
(1) Statement by one named inventor in the application that he/she is 65 years of age, or more; or
(2) Certification by a registered attorney/agent having evidence such as a birth certificate, passport, driver's license, etc. showing one named inventor in the application is 65 years of age, or more.

Name of Inventor who is 65 years of age, or older

Given Name	Middle Name	Family Name	Suffix
Kenneth	P.	Weiss	

A signature of the applicant or representative is required in accordance with 37 CFR 1.33 and 10.18.
Please see 37 CFR 1.4(d) for the format of the signature.

Select (1) or (2) :

○ (1) I am an inventor in this application and I am 65 years of age, or more.

● (2) I am an attorney or agent registered to practice before the Patent and Trademark Office, and I certify that I am in possession of evidence, and will retain such in the application file record, showing that the inventor listed above is 65 years of age, or more.

Signature	/Robert V. Donahoe/	Date (YYYY-MM-DD)	2011-08-04
Name	Robert V. Donahoe	Registration Number	46667

PTO/SB/130 (07-09)
Approved for use through 07/31/2012. OMB 0651- 0031
U.S. Patent and Trademark Office; U.S. DEPARTMENT OF COMMERCE
Under the Paperwork Reduction Act of 1995, no persons are required to respond to a collection of information unless it contains a valid OMB control number

Privacy Act Statement

The Privacy Act of 1974 (P.L. 93-579) requires that you be given certain information in connection with your submission of the attached form related to a patent application or patent. Accordingly, pursuant to the requirements of the Act, please be advised that: (1) the general authority for the collection of this information is 35 U.S.C. 2(b)(2); (2) furnishing of the information solicited is voluntary; and (3) the principal purpose for which the information is used by the U.S. Patent and Trademark Office is to process and/or examine your submission related to a patent application or patent. If you do not furnish the requested information, the U.S. Patent and Trademark Office may not be able to process and/or examine your submission, which may result in termination of proceedings or abandonment of the application or expiration of the patent.

The information provided by you in this form will be subject to the following routine uses:

1. The information on this form will be treated confidentially to the extent allowed under the Freedom of Information Act (5 U.S.C. 552) and the Privacy Act (5 U.S.C. 552a). Records from this system of records may be disclosed to the Department of Justice to determine whether the Fr eedom of Information Act requires disclosure of these records.

2. A record from this system of records may be disclosed, as a routine use, in the course of presenting evidence to a court, magistrate, or administrative tribunal, including disclosures to opposing counsel in the course of settlement negotiations.

3. A record in this system of records may be disclosed, as a routine use, to a Member of Congress submitting a request involving an individual, to whom the record pertains, when the individual has requested assistance from the Member with respect to the subject matter of the record.

4. A record in this system of records may be disclosed, as a routine use, to a contractor of the Agency having need for the information in order to perform a contract. Recipients of information shall be required to comply with the requirements of the Privacy Act of 1974, as amended, pursuant to 5 U.S.C. 552a(m).

5. A record related to an International Application filed under the Patent Cooperation Treaty in this system of records may be disclosed, as a routine use, to the International Bureau of the World Intellectual Property Organization, pursuant to the Patent Cooperation Treaty.

6. A record in this system of records may be disclosed, as a routine use, to another federal agency for purposes of National Security review (35 U.S.C. 181) and for review pursuant to the Atomic Energy Act (42 U.S.C. 218(c)).

7. A record from this system of records may be disclosed, as a routine use, to the Administrator, General Services, or his/her designee, during an inspection of records conducted by GSA as part of that agency's responsibility to recommend improvements in records management practices and programs, under authority of 44 U.S.C. 2904 and 2906. Such disclosure shall be made in accordance with the GSA regulations governing inspection of records for this purpose, and any other relevant (i.e., GSA or Commerce) directive. Such disclosure shall not be used to make determinations about indivi duals.

8. A record from this system of records may be disclosed, as a routine use, to the public after either publication of the application pursuant to 35 U.S.C. 122(b) or issuance of a patent pursuant to 35 U.S.C. 151. Further, a record may be disclosed, subject to the limitations of 37 CFR 1.14, as a routine use, to the public if the record was filed in an application which became abandoned or in which the proceedings were terminated and which application is referenced by either a published application, an application open to public inspections or an issued patent.

9. A record from this system of records may be disclosed, as a routine use, to a Federal, State, or local law enforcement agency, if the USPTO becomes aware of a violation or potential violation of law or regulation.

UNITED STATES PATENT AND TRADEMARK OFFICE

Commissioner for Patents
United States Patent and Trademark Office
P.O. Box 1450
Alexandria, VA 22313-1450
www.uspto.gov

In re Application of
Kenneth P. Weiss

Application No. 13168556

Filed: June 24,2011

Attorney Docket No. W0537-700920

:DECISION ON PETITION TO MAKE SPECIAL
:UNDER 37 CFR 1.102(c)(1)

This is a decision on the electronic petition under 37 CFR 1.102 (c)(1), filed 04-AUG-2011 to make the above-identified application special based on applicant's age as set forth in MPEP § 708.02, Section IV.

The petition is **GRANTED**.

A grantable petition to make an application special under 37 CFR 1.102(c)(1), MPEP § 708.02, Section IV: Applicant's Age must include a statement by applicant or a registered practitioner having evidence that applicant is at least 65 years of age. No fee is required.

Accordingly, the above-identified application has been accorded "special" status and will be taken up for action by the examiner upon the completion of all pre-examination processing.

Telephone inquiries concerning this electronic decision should be directed to the Electronic Business Center at 866-217-9197.

All other inquiries concerning either the examination or status of the application should be directed to the Technology Center.

UNITED STATES PATENT AND TRADEMARK OFFICE

Commissioner for Patents
United States Patent and Trademark Office
P.O. Box 1450
Alexandria, VA 22313-1450
www.uspto.gov

LERNER GREENBERG STEMER LLP
P O BOX 2480
HOLLYWOOD, FL 33022-2480

MAILED

JUL 18 2011

OFFICE OF PETITIONS

In re Application of :
Thomas W. Mc Clellan :
Application No. 13/168,566 : ON PETITION
Filed: June 24, 2011 :
Attorney Docket No. TMF-9189D :

This is a decision on the petition under 37 CFR 1.102(c)(1), filed June 24, 2011, to make the above-identified application special based on applicant's age as set forth in M.P.E.P. § 708.02, Section IV.

The petition is **GRANTED**.

A grantable petition to make an application special under 37 CFR 1.102(c)(1) and MPEP § 708.02, Section IV: Applicant's Age must be accompanied by evidence showing that at least one of the applicants is 65 years of age, or more, such as a birth certificate or a statement by applicant. No fee is required.

The instant petition includes a statement (PTO/SB/130 form) by the applicant's attorney that the applicant is 65 years of age or more. Accordingly, the above-identified application has been accorded "special" status.

Telephone inquiries concerning this decision should be directed to the undersigned at 571-272-6059.

This application file is being referred to the Office of Patent Application Processing (OPAP) for further pre-examination processing.

A. Kelley Collier

Alicia Kelley-Collier
Petitions Examiner
Office of Petitions

UNITED STATES PATE AND TRADEMARK OFFICE

COMMISSIONER FOR PATENTS
UNITED STATES PATENT AND TRADEMARK OFFICE
WASHINGTON, D.C. 20231
www.uspto.gov

Paper No. 10

McDONNELL BOEHNEN HULBERT & BERGHOFF
300 SOUTH WACKER DRIVE, 32ND FLOOR
CHICAGO, IL 60606

COPY MAILED

JUL 23 2002

OFFICE OF PETITIONS

In re Application of	:
John A. Nix et al	:
Application No. 09/872,904	: DECISION GRANTING STATUS
Filed: May 31, 2001	: UNDER 37 CFR 1.47(A)
For: PACKET-SWITCHED TELEPHONY CALL	:
SERVER	:

This is a decision on the petition filed July 9, 2002, requesting reconsideration of a decision mailed May 9, 2002, which refused to accord 37 CFR 1.47(a) status to the above-identified application.

The petition is granted.

Petitioner has shown that the non-signing inventor has refused to join in the filing of the above-identified application.

The above-identified application and papers have been reviewed and found in compliance with 37 CFR 1.47(a). This application is hereby accorded Rule 1.47(a) status. As provided in Rule 1.47(c), this Office will forward notice of this application's filing to the non-signing inventor at the address given in the petition. Notice of the filing of this application will also be published in the Official Gazette.

Telephone inquiries regarding this decision should be directed to Petitions Examiner Wan Laymon at (703) 306-5685.

This application is being forwarded to the Office of Initial Patent Examination for preexamination processing.

Frances Hicks

Frances Hicks
Lead Petitions Examiner
Office of Petitions
Office of the Deputy Commissioner
for Patent Examination Policy

DOCKETED

JUL 29 2002

DUE DATE: —
BY: KB UB

UNITED STATES PATENT AND TRADEMARK OFFICE

Commissioner for Patents
United States Patent and Trademark Office
P.O. Box 1450
Alexandria, VA 22313-1450
www.uspto.gov

POTTER ANDERSON & CORROON LLP
ATTN: JANET E. REED, PH.D.
P.O. BOX 951
WILMINGTON DE 19899-0951

MAILED

SEP 26 2011

OFFICE OF PETITIONS

In re Application of	:	
Neal J. Zondlo et al	:	DECISION ON PETITION
Application No. 13/168,592	:	
Received: June 24, 2011	:	
Attorney Docket No. **UD06-27**	:	

This is in response to the document entitled "RESPONSE TO NOTICE OF INCOMPLETE NONPROVISIONAL APPLICATION AND PETITION UNDER 37 CFR 1.57(a)" submitted July 29, 2011, requesting that the above-referenced application be accorded a filing date of June 24, 2011. This petition is being treated pursuant to 37 CFR 1.53(e)(2)[1].

Application papers in the above-identified application were deposited on June 24, 2011. However, on July 13, 2011, the Office of Patent Application Processing mailed applicants a "Notice of Incomplete Nonprovisional Application," notifying applicants that the application papers had not been accorded a filing date because the application was deposited without drawings. In response, applicants timely filed this petition. Applicants request that the application be amended to include the inadvertently omitted drawings on the basis that the application as filed contained a prior benefit claim under 37 CFR 1.55 or 1.78.

[1] Any request for review of a notification pursuant to paragraph (e)(1) of this section, or a notification that the original application papers lack a portion of the specification or drawing(s), must be by way of a petition pursuant to this paragraph accompanied by the fee set forth in § 1.17(f). In the absence of a timely (§ 1.181(f)) petition pursuant to this paragraph, the filing date of an application in which the applicant was notified of a filing error pursuant to paragraph (e)(1) of this section will be the date the filing error is corrected.

Petitioner's arguments and evidence have been considered. However, a review of the application confirms that, as filed, the application contained at least one claim to a composition. MPEP 601.01(f) provides that:

> It has been USPTO practice to treat an application that contains at least one process or method claim as an application for which a drawing is not necessary for an understanding of the invention under 35 U.S.C. 113 (first sentence). The same practice has been followed in composition applications.

Thus, pursuant to § 601.01(f), where the application includes at least one composition claim, a drawing is not considered essential for a filing date. The instant application includes a composition claim. Therefore, the instant application is entitled to a filing date without drawings present in the application.

Accordingly, the Office should have granted the application a filing date and mailed a Notice of Omitted Items instead of a Notice of Incomplete Nonprovisional Application. As stated in MPEP 601.01(g) under the section entitled, "Application Entitled to a Filing Date," applicant may submit an amendment to include the inadvertently omitted portion of the drawing(s) pursuant to 37 CFR 1.57(a):

> [i]f an application was filed on or after September 21, 2004, and contains a claim under 37 CFR 1.55 for priority of a prior-filed foreign application, or a claim under 37 CFR 1.78 for the benefit of a prior-filed provisional, nonprovisional, or international application that was present on the filing date of the application, and the omitted portion of the drawing(s) was inadvertently omitted from the application and is completely contained in the prior-filed application[.]

Please note that no petition is required and that the amendment must comply with 37 CFR 1.57(a) and 37 CFR 1.121. See MPEP § 201.17. Petitioner may wish to consider filing a preliminary amendment to enter the inadvertently omitted drawings. If a preliminary amendment is filed, it will be reviewed for new matter by the examiner.

To the extent the instant petition requests a filing date of June 24, 2011 with no drawings present in the application, the petition is **GRANTED**.

Given the basis for granting this petition, no petition fee is necessary. Petitioner may request a refund of the petition fee by writing to the Office of Finance, Refund Section. A copy of this decision should accompany the request.

Pursuant to this decision, the application will be referred to Office of Patent Application Processing for:

1. Entry of the filing date as **June 24, 2011**;
2. Correction of Office records, as appropriate, that "**0**" sheets of drawings were present on filing and
3. Issuance of a filing receipt.

Telephone inquiries concerning this matter may be directed to Karen Creasy at (571) 272-3208.

Anthony Knight
Director
Office of Petitions

UNITED STATES PATENT AND TRADEMARK OFFICE

Commissioner for Patents
United States Patent and Trademark Office
P.O. Box 1450
Alexandria, VA 22313-1450
www.uspto.gov

POTTER ANDERSON & CORROON LLP
ATTN: JANET E. REED, PH.D.
P.O. BOX 951
WILMINGTON DE 19899-0951

MAILED

OCT 06 2011

OFFICE OF PETITIONS

In re Application of	:	
Neal J. Zondlo et al	:	
Application No. 13/168,592	:	DECISION ON REQUEST FOR REFUND
Filed: June 24, 2011	:	
Attorney Docket No. UD06-27	:	

This is a decision on the Request For Refund filed October 4, 2011.

The request is **GRANTED**.

Applicant files the above request for refund and states that "Applicant electronically filed a Response To Notice of Incomplete Nonprovisional Application and Petition Under 37 CFR 1.57(a) with the U.S. Patent and Trademark Office on July 29, 2011. Applicant has been notified by the Office that no Petition was required and therefore may be eligible for a refund of the petition fee. ... Applicant respectfully requests a refund in the amount of $400.00 for the petition fee paid on July 29, 2011."

A review of Office records indicates that applicant is entitled to a refund of the petition fee ($400.00) submitted with the petition on July 29, 2011.

In view of the above, the petition fee of $400.00 is being credited to petitioner's credit card account as it is the method in which the fee was paid.

Any questions concerning this matter may be directed to the undersigned at (571) 272-3208.

/KOC/
Karen Creasy
Petitions Examiner
Office of Petitions

CLAIMS

What is claimed is:

1. A blowout preventer for sealing a tubular of a wellbore, the wellbore penetrating a subterranean formation, the blowout preventer comprising:

   a housing having a bore therethrough for receiving the tubular;

   at least one ram slidably positionable in the housing, each of the at least one rams having a ram block for sealing engagement about the tubular;

   an actuator for selectively driving the ram block, the actuator comprising a piston slidably positionable in a cylinder; and

   a monitor for detecting the piston therein, the monitor comprising a visual indicator on an exterior of the cylinder, the visual indicator operatively coupled to the piston for displaying a position of the piston as the piston travels within the cylinder whereby a position of the ram may be determined.

2. The blowout preventer of Claim 1, wherein the visual indicator comprises a cable operatively connected to the piston, the cable operatively connectable to a dial via a pulley and rotatable thereby as the piston moves within the cylinder.

3. The blowout preventer of Claim 2, wherein the visual indicator further comprises at least one gear for operatively coupling the pulley to the dial.

4. The blowout preventer of Claim 2, wherein the visual indicator further comprises a magnetic coupler for coupling the dial to the pulley.

5. The blowout preventer of Claim 1, wherein the visual indicator comprises a housing integral with the cylinder.

6. The blowout preventer of Claim 1, wherein the visual indicator comprises a plurality of flags positioned on a flag rod, the plurality of flags being selectively raisable as the piston passes adjacent thereto.
7. The blowout preventer of Claim 1, wherein the visual indicator comprises a magnet slidably positionable on a guide in response to a magnet on the piston passing adjacent thereto.
8. The blowout preventer of Claim 1, wherein the visual indicator comprises a transparent case with a plurality of metal filings movably positionable therein in response to a magnet on the piston passing adjacent thereto.
9. The blowout preventer of Claim 1, wherein the visual indicator comprises a transparent case with a magnetic indicator movably positionable therein in response to a magnet on the piston passing adjacent thereto.
10. The blowout preventer of Claim 1, further comprising a visual indicator sensor for detecting the visual indicator.
11. The blowout preventer of Claim 1, further comprising an electrical indicator for detecting a position of the piston.
12. The blowout preventer of Claim 11, wherein the electrical indicator comprises a magnet slidably positionable on a guide in response to a magnet on the piston passing adjacent thereto, and at least one Hall Effect sensor for detecting a position of the magnet on the guide.
13. The blowout preventer of Claim 11, wherein the electrical indicator comprises an inductive resistance sensor comprising a coil disposed about the cylinder.

14. The blowout preventer of Claim 11, wherein the electrical indicator comprises a top end ultrasonic sensor at a top end of the cylinder and a bottom end ultrasonic sensor at a bottom end of the cylinder for detecting the piston when adjacent thereto.
15. The blowout preventer of Claim 11, wherein the electrical indicator comprises an ultrasonic limit sensor.
16. The blowout preventer of Claim 11, wherein the electrical indicator comprises a laser sensor.
17. The blowout preventer of Claim 11, wherein the electrical indicator comprises a capacitive displacement sensor.
18. The blowout preventer of Claim 11, wherein the electrical indicator comprises a sonar sensor for emitting sonar waves and sensing the waves rebounded by the piston.
19. The blowout preventer of Claim 11, wherein the electrical indicator comprises at least one proximity sensor.
20. The blowout preventer of Claim 11, wherein the electrical indicator comprises a flow sensor for detecting the flow of fluid through a chamber of the cylinder as the piston passes therein.

21. A system for sealing a tubular of a wellbore, the wellbore penetrating a subterranean formation, the system comprising:

a blowout preventer comprising:

a housing having a bore therethrough for receiving the tubular;

at least one ram slidably positionable in the housing, each of the at least one ram having a ram block for sealing engagement about the tubular;

an actuator for selectively driving the ram block, the actuator comprising a piston slidably positionable in a cylinder; and

a monitor for detecting the piston therein, the monitor comprising a visual indicator on an exterior of the cylinder, the visual indicator operatively coupled to the piston for displaying a position of the piston as the piston travels within the cylinder whereby a position of the ram may be determined; and

an inspector for inspecting the visual indicator.

22. The system of Claim 21, wherein the inspector is a human.

23. The system of Claim 21, wherein the inspector is a remote operated vehicle (ROV).

24. The system of Claim 21, further comprising a surface unit for receiving data from the monitor.

25. The system of Claim 21, further comprising an electrical indicator for detecting a position of the piston.

26. The system of Claim 25, further comprising a receiver for communicating signals with the electrical indicator.

27. The system of Claim 25, further comprising at least one sensor for detecting wellsite parameters.

28. A method of monitoring a blowout preventer, the method comprising:

positioning the blowout preventer about a tubular, the blowout preventer comprising:

a housing having a bore therethrough for receiving the tubular;

at least one ram slidably positionable in the housing, each of the at least one rams having a ram block for sealing engagement about the tubular;

an actuator for selectively driving the ram block, the actuator comprising a piston slidably positionable in a cylinder; and

a monitor for detecting the piston therein, the monitor comprising a visual indicator on an exterior of the cylinder, the visual indicator operatively coupled to the piston for displaying a position of the piston as the piston travels within the cylinder whereby a position of the ram may be determined;

activating at least one of the visual indicators of the monitor as the piston passes adjacent thereto; and

inspecting the visual indicators.

29. The method of Claim 28, further comprising sensing a position of the piston with an electrical indicator.

30. The method of Claim 28, wherein the step of inspecting comprises manually viewing the visual indicators.

31. The method of Claim 28, wherein the step of inspecting comprises sensing the visual indicator for activation.

32. The method of Claim 28, further comprising passing data from the monitor to a surface unit.

33. A blowout preventer for sealing a tubular of a wellbore, the wellbore penetrating a subterranean formation, the blowout preventer comprising:

a housing having a bore therethrough for receiving the tubular;

at least one ram slidably positionable in the housing, each of the at least one rams having a ram block for sealing engagement about the tubular;

an actuator for selectively driving the ram block, the actuator comprising a piston slidably positionable in a cylinder; and

a monitor for detecting the piston therein, the monitor comprising a housing with a cable therein, the cable operatively connectable to the piston and movable therewith whereby a position of the ram may be determined.

34. The blowout preventer of Claim 33, wherein the monitor further comprises a sensor operatively connected for detecting movement of the cable.

35. The blow out preventer of Claim 34, wherein the monitor further comprises a communication link for passing data from the sensor to a surface unit.

36. The blowout preventer of Claim 33, wherein the monitor further comprises at least one gear.

37. The blowout preventer of Claim 33, wherein the monitor further comprises at least one pulley.

38. The blowout preventer of Claim 33, wherein the housing is integral with the cylinder.

39. The blowout preventer of Claim 33, wherein the monitor further comprises a visual indicator on an exterior of the housing, the visual indicator operatively coupled to the

cable and movable thereby for visually indicating a position of the piston as the piston travels within the cylinder.

40. The blowout preventer of Claim 39, wherein the monitor further comprises a magnetic coupler inside of the housing for coupling the cable to the visual indicator.

41. The blowout preventer of Claim 39, wherein the visual indicator comprises a dial activatable by the cable.

PTO/SB/20PCT-KR (06-10)
Approved for use through 01/31/2012. OMB 0651-0058
U.S. Patent and Trademark Office; U. S. DEPARTMENT OF COMMERCE
Under the Paperwork Reduction Act of 1995, no persons are required to respond to a collection of information unless it displays a valid OMB control number.

REQUEST FOR PARTICIPATION IN THE PATENT COOPERATION TREATY - PATENT PROSECUTION HIGHWAY (PCT-PPH) PILOT PROGRAM BETWEEN THE KOREAN INTELLECTUAL PROPERTY OFFICE (KIPO) AND THE USPTO

Application No:	13/168,594	Filing date:	June 24, 2011
First Named Inventor:	Joseph James Liotta		
Title of the Invention:	BLOWOUT PREVENTER MONITORING SYSTEM AND METHOD OF USING SAME		

THIS REQUEST FOR PARTICIPATION IN THE PCT-PPH PILOT PROGRAM ALONG WITH THE REQUIRED DOCUMENTS MUST BE SUBMITTED VIA EFS-WEB. INFORMATION REGARDING EFS-WEB IS AVAILABLE AT HTTP://WWW.USPTO.GOV/EBC/EFS_HELP.HTML

APPLICANT HEREBY REQUESTS PARTICIPATION IN THE PCT-PPH PROGRAM AND PETITIONS TO MAKE THE ABOVE-IDENTIFIED APPLICATION SPECIAL UNDER THE PCT-PPH PROGRAM.

The above-identified application is (1) a national stage entry of the corresponding PCT application, or (2) a national stage entry of another PCT application which claims priority to the corresponding PCT application, or (3) a national application that claims domestic/ foreign priority to the corresponding PCT application, or (4) a national application which forms the basis for the priority claim in the corresponding PCT application, or (5) a continuing application of a U.S. application that satisfies one of (1) to (4) above, or (6) a U.S. application that claims domestic benefit to a U.S. provisional application which forms the basis for the priority claim in the corresponding PCT application.

The corresponding PCT application number(s) is/are: PCT/US2011/041894

The international filing date of the corresponding PCT application(s) is/are: June 24, 2011

I. List of Required Documents:

a. **A copy of the latest international work product (WO/ISA, WO/IPEA, or IPER) in the above–identified corresponding PCT application(s)**

- [x] Is attached.
- [ ] Is not attached because the document is already in the U.S. application.

b. **A copy of all claims which were indicated as having novelty, inventive step and industrial applicability in the above-identified corresponding PCT application(s).**

- [x] Is attached.
- [ ] Is not attached because the document is already in the U.S. application.

c. **English translations of the documents in a. and b. above are attached (if the documents are not in the English language). A statement that the English translation is accurate is attached for the document in b. above.**

This collection of information is required by 35 U.S.C. 119, 37 CFR 1.55, and 37 CFR 1.102(d). The information is required to obtain or retain a benefit by the public, which is to file (and by the USPTO to process) an application. Confidentiality is governed by 35 U.S.C. 122 and 37 CFR 1.11 and 1.14. This collection is estimated to take 2 hours to complete, including gathering, preparing, and submitting the completed application form to the USPTO. Time will vary depending upon the individual case. Any comments on the amount of time you require to complete this form and/or suggestions for reducing this burden should be sent to the Chief Information Officer, U.S. Patent and Trademark Office, U.S. Department of Commerce, P.O. Box 1450, Alexandria, VA 22313-1450. DO NOT SEND FEES OR COMPLETED FORMS TO THIS ADDRESS.

Approved for use through 01/31/2012. OMB 0651-0058
U.S.Patent and Trademark Office; U.S. DEPARTMENT OF COMMERCE
Under the Paperwork Reduction Act of 1995, no persons are required to respond to a collection of information unless it displays a valid OMB control number.

REQUEST FOR PARTICIPATION IN THE PCT-PPH PILOT PROGRAM BETWEEN THE KIPO AND THE USPTO

(continued)

Application No.:	13/168,594
First Named Inventor:	Joseph James Liotta

d. **(1) An information disclosure statement listing the documents cited in the international work products (ISR, WO/ISA, WO/IPEA, IPER) of the corresponding PCT application.**

☐ Is attached

☑ Has already been filed in the above-identified U.S. application on January 19, 2012

(2) Copies of all documents (except) for U.S. patents or U.S. patent application publications)

☐ Are attached.

☑ Have already been filed in the above-identified U.S. application on January 19, 2012

II. Claims Correspondence Table:

Claims in US Application	Patentable Claims in the corresponding PCT Application	Explanation regarding the correspondence
1-41	1-41	All claims in US 13/168,594 and PCT/US2011/041894 are identical.

III. All the claims in the US application sufficiently correspond to the patentable claims in the corresponding PCT application.

Signature /JL Jennie Salazar/	Date March 6, 2012
Name (Print/Typed) Jennie Salazar	Registration Number 45,065

Privacy Act Statement

The **Privacy Act of 1974 (P.L. 93-579)** requires that you be given certain information in connection with your submission of the attached form related to a patent application or patent. Accordingly, pursuant to the requirements of the Act, please be advised that: (1) the general authority for the collection of this information is 35 U.S.C. 2(b)(2); (2) furnishing of the information solicited is voluntary; and (3) the principal purpose for which the information is used by the U.S. Patent and Trademark Office is to process and/or examine your submission related to a patent application or patent. If you do not furnish the requested information, the U.S. Patent and Trademark Office may not be able to process and/or examine your submission, which may result in termination of proceedings or abandonment of the application or expiration of the patent.

The information provided by you in this form will be subject to the following routine uses:

1. The information on this form will be treated confidentially to the extent allowed under the Freedom of Information Act (5 U.S.C. 552) and the Privacy Act (5 U.S.C 552a). Records from this system of records may be disclosed to the Department of Justice to determine whether disclosure of these records is required by the Freedom of Information Act.
2. A record from this system of records may be disclosed, as a routine use, in the course of presenting evidence to a court, magistrate, or administrative tribunal, including disclosures to opposing counsel in the course of settlement negotiations.
3. A record in this system of records may be disclosed, as a routine use, to a Member of Congress submitting a request involving an individual, to whom the record pertains, when the individual has requested assistance from the Member with respect to the subject matter of the record.
4. A record in this system of records may be disclosed, as a routine use, to a contractor of the Agency having need for the information in order to perform a contract. Recipients of information shall be required to comply with the requirements of the Privacy Act of 1974, as amended, pursuant to 5 U.S.C. 552a(m).
5. A record related to an International Application filed under the Patent Cooperation Treaty in this system of records may be disclosed, as a routine use, to the International Bureau of the World Intellectual Property Organization, pursuant to the Patent Cooperation Treaty.
6. A record in this system of records may be disclosed, as a routine use, to another federal agency for purposes of National Security review (35 U.S.C. 181) and for review pursuant to the Atomic Energy Act (42 U.S.C. 218(c)).
7. A record from this system of records may be disclosed, as a routine use, to the Administrator, General Services, or his/her designee, during an inspection of records conducted by GSA as part of that agency's responsibility to recommend improvements in records management practices and programs, under authority of 44 U.S.C. 2904 and 2906. Such disclosure shall be made in accordance with the GSA regulations governing inspection of records for this purpose, and any other relevant (*i.e.*, GSA or Commerce) directive. Such disclosure shall not be used to make determinations about individuals.
8. A record from this system of records may be disclosed, as a routine use, to the public after either publication of the application pursuant to 35 U.S.C. 122(b) or issuance of a patent pursuant to 35 U.S.C. 151. Further, a record may be disclosed, subject to the limitations of 37 CFR 1.14, as a routine use, to the public if the record was filed in an application which became abandoned or in which the proceedings were terminated and which application is referenced by either a published application, an application open to public inspection or an issued patent.
9. A record from this system of records may be disclosed, as a routine use, to a Federal, State, or local law enforcement agency, if the USPTO becomes aware of a violation or potential violation of law or regulation.

PATENT COOPERATION TREATY

PCT

INTERNATIONAL SEARCH REPORT

(PCT Article 18 and Rules 43 and 44)

Applicant's or agent's file reference 60.3188-1PCT	FOR FURTHER ACTION	see Form PCT/ISA/220 as well as, where applicable, item 5 below.
International application No PCT/US2011/041894	International filing date (day/month/year) 24 JUNE 2011 (24.06.2011)	(Earliest) Priority Date (day/month/year) 01 JULY 2010 (01.07.2010)

Applicant

NATIONAL OILWELL VARCO, L.P. et al

This international search report has been prepared by this International Searching Authority and is transmitted to the applicant according to Article 18. A copy is being transmitted to the International Bureau.

This international search report consists of a total of 5 sheets.

☐ It is also accompanied by a copy of each prior art document cited in this report.

1. **Basis of the report**
   a. With regard to the **language**, the international search was carried out on the basis of:
      ☒ the international application in the language in which it was filed
      ☐ a translation of the international application into _____, which is the language of a translation furnished for the purposes of international search (Rules 12.3(a) and 23.1(b))
   b. ☐ This international search report has been established taking into account the **rectification of an obvious mistake** authorized by or notified to this Authority under Rule 91 (Rule 43.6bis(a))
   c. ☐ With regard to any **nucleotide and/or amino acid sequence** disclosed in the international application, see Box No. I.
2. ☐ **Certain claims were found unsearchable** (See Box No. II)
3. ☐ **Unity of invention is lacking** (See Box No. III)
4. With regard to the **title**,
   ☒ the text is approved as submitted by the applicant
   ☐ the text has been established by this Authority to read as follows:
5. With regard to the **abstract**,
   ☒ the text is approved as submitted by the applicant
   ☐ the text has been established, according to Rule 38.2, by this Authority as it appears in Box No. IV. The applicant may, within one month from the date of mailing of this international search report, submit comments to this Authority.
6. With regard to the **drawings**,
   a. the figure of the **drawings** to be published with the abstract is Figure No. 4K
      ☒ as suggested by the applicant
      ☐ as selected by this Authority, because the applicant failed to suggest a figure.
      ☐ as selected by this Authority, because this figure better characterizes the invention
   b. ☐ none of the figure is to be published with the abstract.

INTERNATIONAL SEARCH REPORT

International application No
PCT/US2011/041894

A. CLASSIFICATION OF SUBJECT MATTER

E21B 33/06(2006.01)i, E21B 47/09(2006.01)i

According to International Patent Classification (IPC) or to both national classification and IPC

B. FIELDS SEARCHED

Minimum documentation searched (classification system followed by classification symbols)

E21B 33/06, E21B 47/01, E21B 29/00

Documentation searched other than minimum documentation to the extent that such documents are included in the fields searched

Korean utility models and applications for utility models

Japanese utility models and applications for utility models

Electronic data base consulted during the international search (name of data base and, where practicable, search terms used)

eKOMPASS(KIPO internal) & Keywords: wellbore, blowout preventer, ram block, monitoring

C. DOCUMENTS CONSIDERED TO BE RELEVANT

Category*	Citation of document, with indication, where appropriate, of the relevant passages	Relevant to claim No.
A	US 2008-0106888 A1 (ROBERT ARNOLD JUDGE et al.) 21 August 2008 See the abstract, figures 2-3, and claims 1-20	1-41
A	US 5074516 A (JOE HERRY) 24 December 1991 See the abstract, figures 1-6, and claim 1	1-41
A	US 2007-0102655 A1 (FRANK BENJAMIN SPRINGETT) 10 May 2007 See the abstract, figures 1A-6, and claims 1-23	1-41
A	US 4540046 A (STANLEY W. GRANGER et al.) 10 September 1985 See the abstract, figures 1-10, and claims 1-42	1-41

☐ Further documents are listed in the continuation of Box C.

☒ See patent family annex.

* Special categories of cited documents

"A" document defining the general state of the art which is not considered to be of particular relevance

"E" earlier application or patent but published on or after the international filing date

"L" document which may throw doubts on priority claim(s) or which is cited to establish the publication date of citation or other special reason (as specified)

"O" document referring to an oral disclosure, use, exhibition or other means

"P" document published prior to the international filing date but later than the priority date claimed

"T" later document published after the international filing date or priority date and not in conflict with the application but cited to understand the principle or theory underlying the invention

"X" document of particular relevance, the claimed invention cannot be considered novel or cannot be considered to involve an inventive step when the document is taken alone

"Y" document of particular relevance, the claimed invention cannot be considered to involve an inventive step when the document is combined with one or more other such documents such combination being obvious to a person skilled in the art

"&" document member of the same patent family

Date of the actual completion of the international search	Date of mailing of the international search report
04 JANUARY 2012 (04.01.2012)	**05 JANUARY 2012 (05.01.2012)**

Name and mailing address of the ISA/KR

Korean Intellectual Property Office
Government Complex-Daejeon, 189 Cheongsa-ro, Seo-gu, Daejeon 302-701, Republic of Korea

Facsimile No. 82-42-472-7140

Authorized officer

JUNG Sug Woo

Telephone No. 82-42-481-8443

INTERNATIONAL SEARCH REPORT

Information on patent family members

International application No.
PCT/US2011/041894

Patent document cited in search report	Publication date	Patent family member(s)	Publication date
US 2008-0196088 A1	21.08.2008	AR 070577 A1	21.04.2010
		AU 2002-342464 B2	04.06.2009
		AU 2004-282188 A9	28.04.2005
		AU 2004-282188 B2	24.12.2009
		AU 2008-216193 A1	21.08.2008
		AU 2009-216193 B2	02.06.2011
		AU 2008-216248 A1	21.08.2008
		AU 2008-216253 A1	21.08.2008
		AU 2008-216257 A1	21.08.2008
		AU 2008-216264 A1	21.08.2008
		CA 2461668 A1	03.04.2003
		CA 2542874 A1	28.04.2005
		CA 2652680 A1	29.11.2007
		CA 2677653 A1	21.08.2008
		CA 2677692 A1	21.08.2008
		CA 2677698 A1	21.08.2008
		CA 2678364 A1	21.08.2008
		CA 2682747 A1	21.08.2008
		CN 100478930 C	22.04.2009
		CN 101300026 A	05.11.2008
		CN 101565858 A	28.10.2009
		CN 101573781 A	04.11.2009
		CN 101627516 A	13.01.2010
		CN 101674759 A	17.03.2010
		CN 101675213 A	17.03.2010
		CN 1744954 A	08.03.2006
		EP 1432527 A2	30.06.2004
		EP 1682568 A2	26.07.2006
		EP 2036916 A2	25.03.2009
		EP 2114185 A1	11.11.2009
		EP 2114213 A2	11.11.2009
		EP 2119985 A2	18.11.2009
		EP 2384692 A2	09.11.2011
		JP 2005-505915 A	24.02.2005
		JP 2007-517530 A	05.07.2007
		JP 2009-537087 A	29.10.2009
		JP 2010-517724 A	27.05.2010
		JP 2010-516806 A	27.06.2010
		KR 10-0942320 B1	12.02.2010
		KR 10-2006-0108904 A	23.10.2006
		KR 10-2009-0120494 A	24.11.2009
		TW 200805890 A	16.01.2008
		US 2003-0066900 A1	10.04.2003
		US 2003-0148360 A1	07.08.2003
		US 2005-0164515 A9	28.07.2005
		US 2006-0170336 A1	04.08.2006
		US 2006-0121340 A1	08.06.2006
		US 2008-0189654 A1	14.08.2008
		US 2008-0189661 A1	14.08.2008

INTERNATIONAL SEARCH REPORT

Information on patent family members

International application No.
PCT/US2011/041894

Patent document cited in search report	Publication date	Patent family member(s)	Publication date
		US 2008-0190080 A1	14.08.2008
		US 2008-0191565 A1	14.08.2008
		US 2008-0194229 A1	14.08.2008
		US 2008-0196980 A1	14.08.2008
		US 2008-0198163 A1	21.08.2008
		US 2008-0198221 A1	21.08.2008
		US 2008-0197308 A1	21.08.2008
		US 2009-0213693 A1	04.09.2009
		US 2009-0242552 A1	02.10.2009
		US 2009-0044579 A1	19.02.2009
		US 2009-0258619 A1	29.10.2009
		US 2010-0044356 A1	25.02.2010
		US 2010-0053928 A1	04.03.2010
		US 2010-0101879 A1	29.04.2010
		US 2011-0031457 A1	10.02.2011
		US 2011-0087556 A1	09.04.2011
		US 7488593 B2	10.02.2009
		US 7576507 B2	18.08.2009
		US 7659890 B1	09.02.2010
		US 7661156 B2	16.02.2010
		US 7832709 B2	16.11.2010
		US 7836530 B2	23.11.2010
		US 7865863 B2	01.03.2011
		US 7960721 B2	14.06.2011
		US 7980306 B2	19.07.2011
		US 8060859 B2	22.11.2011
		WO 03-028560 A3	03.04.2003
		WO 2006-037856 A3	30.04.2006
		WO 2007-136841 A3	29.11.2007
		WO 2008-100992 A1	21.08.2008
		WO 2008-100993 A1	21.08.2008
		WO 2008-100994 A1	21.08.2008
		WO 2008-100995 A1	21.08.2008
		WO 2008-100996 A2	21.08.2008
		WO 2008-101000 A3	21.08.2008
		WO 2008-101001 A2	21.08.2008
		WO 2008-101002 A1	21.08.2008
		WO 2008-101003 A1	21.08.2008
		WO 2008-101004 A1	21.08.2008
		WO 2008-101005 A1	21.08.2008
		WO 2008-101006 A1	21.08.2008
		WO 2008-101007 A2	21.08.2008
		WO 2008-101008 A1	21.08.2008
		WO 2008-101009 A1	21.08.2008
		WO 2008-101010 A1	21.08.2008
		WO 2008-101011 A1	21.08.2008
		WO 2008-101012 A1	21.08.2008
		WO 2008-101013 A1	21.08.2008
		WO 2008-101014 A1	21.08.2008
		WO 2008-101015 A1	21.08.2008

INTERNATIONAL SEARCH REPORT

Information on patent family members

International application No
PCT/US2011/041894

Patent document cited in search report	Publication date	Patent family member(s)	Publication date
		WO 2008-101016 A3	21.08.2008
		WO 2008-101017 A2	21.08.2008
		WO 2008-101018 A1	21.08.2008
		WO 2008-101019 A2	21.08.2008
		WO 2008-101020 A1	21.08.2008
		WO 2008-101021 A2	21.08.2008
		WO 2008-101022 A2	21.08.2008
		WO 2008-101023 A1	21.08.2008
		WO 2008-101030 A1	21.08.2008
		WO 2008-101031 A3	21.08.2008
		WO 2008-101032 A1	21.08.2008
		WO 2008-101033 A2	21.08.2008
		WO 2008-101034 A2	21.08.2008
		WO 2008-101035 A3	21.08.2008
		WO 2009-108340 A1	13.08.2009
		WO 2011-011759 A3	27.01.2011
US 5074519 A	24.12.1991	None	
US 2007-0102655 A1	10.05.2007	US 7331562 B2	19.02.2008
		WO 2007-052082 A2	10.05.2007
		WO 2007-052082 A3	28.06.2007
US 4540346 A	10.09.1985	JP 06-086793 B2	02.11.1994
		JP 60-065169 A	14.05.1985

PATENT COOPERATION TREATY

From the
INTERNATIONAL SEARCHING AUTHORITY

To:
SALAZAR JENNIE

H. SALAZAR LAW FIRM 1204 WEST GRAY STREET,
SUITE 401 HOUSTON TX 77019-4807 USA

PCT

WRITTEN OPINION OF THE INTERNATIONAL SEARCHING AUTHORITY

(PCT Rule 43bis.1)

Date of mailing
(day/month/year) 05 JANUARY 2012 (05.01.2012)

Applicant's or agent's file reference
66.1188-PCT

FOR FURTHER ACTION
See paragraph 2 below

International application No	International filing date (day/month/year)	Priority date (day/month/year)
PCT/US2011/041894	24 JUNE 2011 (24.06.2011)	01 JULY 2010 (01.07.2010)

International Patent Classification (IPC) or both national classification and IPC

E21B 33/06(2006.01); E21B 47/09(2006.01)

Applicant

NATIONAL OILWELL VARCO, L.P. et al

1 This opinion contains indications relating to the following items:

- [X] Box No. I Basis of the opinion
- [ ] Box No. II Priority
- [ ] Box No. III Non-establishment of opinion with regard to novelty, inventive step and industrial applicability
- [ ] Box No. IV Lack of unity of invention
- [X] Box No. V Reasoned statement under Rule 43bis.1(a)(i) with regard to novelty, inventive step or industrial applicability; citations and explanations supporting such statement
- [ ] Box No. VI Certain documents cited
- [ ] Box No. VII Certain defects in the international application
- [ ] Box No. VIII Certain observations on the international application

2 **FURTHER ACTION**

If a demand for international preliminary examination is made, this opinion will be considered to be a written opinion of the International Preliminary Examining Authority ("IPEA") except that this does not apply where the applicant chooses an Authority other than this one to be the IPEA and the chosen IPEA has notified the International Bureau under Rule 66.1bis(b) that written opinions of this International Searching Authority will not be so considered.

If this opinion is, as provided above, considered to be a written opinion of the IPEA, the applicant is invited to submit to the IPEA a written reply together, where appropriate, with amendments, before the expiration of 3 months from the date of mailing of Form PCT/ISA/220 or before the expiration of 22 months from the priority date, whichever expires later.
For further options, see Form PCT/ISA/220.

Name and mailing address of the ISA/KR	Date of completion of this opinion	Authorized officer
Korean Intellectual Property Office Government Complex-Daejeon, 189 Cheongsa-ro, Seo-gu, Daejeon 302-701, Republic of Korea Facsimile No. 82-42-472-7140	04 JANUARY 2012 (04.01.2012)	JUNG Sug Woo Telephone No. 82-42-481-8443

WRITTEN OPINION OF THE
INTERNATIONAL SEARCHING AUTHORITY

International application No.
PCT/US2011/041894

Box No. 1 Basis of this opinion

1 With regard to the language, this opinion has been established on the basis of:

☒ the international application in the language in which it was filed

☐ a translation of the international application into _____, which is the language of a translation furnished for the purposes of international search (Rules 12.3(a) and 23.1(b))

2. ☐ This opinion has been established taking into account the rectification of an obvious mistake authorized by or notified to this Authority under Rule 91 (Rule 43bis.1(a))

3 With regard to any nucleotide and/or amino acid sequence disclosed in the international application, this opinion has been established on the basis of:

a a sequence listing filed or furnished

☐ on paper

☐ in electronic form

b time of filing or furnishing

☐ contained in the international application as filed

☐ filed together with the international application in electronic form

☐ furnished subsequently to this Authority for the purpose of search

4 ☐ In addition, in the case that more than one version or copy of a sequence listing has been filed or furnished, the required statements that the information in the subsequent or additional copies is identical to that in the application as filed or does not go beyond the application as filed, as appropriate, were furnished.

5 Additional comments:

WRITTEN OPINION OF THE INTERNATIONAL SEARCHING AUTHORITY	International application No. PCT/US2011/041894

Box No. V Reasoned statement under Rule 43bis.1(a)(i) with regard to novelty, inventive step or industrial applicability; citations and explanations supporting such statement

1 Statement

Novelty (N)	Claims	1-41	YES
	Claims	NONE	NO
Inventive step (IS)	Claims	1-41	YES
	Claims	NONE	NO
Industrial applicability (IA)	Claims	1-41	YES
	Claims	NONE	NO

2 Citations and explanations:

Reference is made to the following documents:

D1: US 2008-0196868 A1 (ROBERT ARNOLD JUDGE et al.) 21 August 2008
D2: US 5074518 A (JOE BERRY) 24 December 1991
D3: US 2007-0102655 A1 (FRANK BENJAMIN SPRINGETT) 10 May 2007
D4: US 4540040 A (STANLEY W. GRANGER et al.) 20 September 1985

1. Novelty and Inventive Step

1.1. Claims 1-20

The subject matter of claim 1 differs from the disclosures of prior art documents D1-D4 in that the blowout preventer of claim 1 includes a ram having a ram block for sealing engagement about a tubular of a wellbore, an actuator comprising a piston, and a monitor comprising a visual indicator coupled to the piston whereby a position of the ram may be determined. And it is not obvious to a person skilled in the art by the documents, taken alone or in combination. Therefore, claim 1 meets the requirements of PCT Article 33(2) and (3) with respect to novelty and inventive step.

Claims 2-20 are dependent on claim 1, and therefore meet the requirements of PCT Article 33(2) and (3).

1.2. Claims 21-27

Claim 21 relates to a system for sealing a tubular of a wellbore, the system including the blowout prevent of claim 1. Claim 21 is considered to be novel and to involve an inventive step under PCT Article 33(2) and (3), because the subject matter of claim 1 is considered to be novel and to involve an inventive step.

Claims 22-27 are dependent on claim 21, and therefore meet the requirements of PCT Article 33(2) and (3).

1.3. Claims 28-32

Claim 28 relates to a method of monitoring a blowout preventer, the method including the blowout prevent of claim 1. Claim 28 is considered to be novel and to involve an inventive step under PCT Article 33(2) and (3), because the subject matter of claim 1 is considered to be novel and to involve an inventive step.

Claims 29-32 are dependent on claim 28, and therefore meet the requirements of PCT Article 33(2) and (3).

Continued on Supplemental Box

Supplemental Box

In case the space in any of the preceding boxes is not sufficient.
Continuation of:

Box V

1.4. Claims 33-41

The subject matter of claim 33 differs from the disclosures of prior art documents D1-D4 in that the blowout preventer of claim 33 includes a ram having a ram block for sealing engagement about a tubular of a wellbore, an actuator comprising a piston, and a monitor comprising a housing with a cable operatively connectable to the piston whereby a position of the ram may be determined. And it is not obvious to a person skilled in the art by the documents, taken alone or in combination. Therefore, claim 33 meets the requirements of PCT Article 33(2) and (3) with respect to novelty and inventive step.

Claims 34-41 are dependent on claim 33, and therefore meet the requirements of PCT Article 33(2) and (3).

2. Industrial Applicability

Claims 1-41 are industrially applicable under PCT Article 33(4).

Doc Code: PET.GREEN
Document Description: Petition for Green Tech Pilot

PTO/SB/420 (03-11)

PETITION TO MAKE SPECIAL UNDER THE GREEN TECHNOLOGY PILOT PROGRAM

Attorney Docket Number: 248639	Application Number (if known): 13/168,663	Filing date: 06-24-2011

First Named Inventor: Robert Gregory Wagoner

Title: COOLING DEVICE FOR ELECTRICAL DEVICE AND METHOD OF COOLING AN ELECTRICAL DEVICE

APPLICANT HEREBY REQUESTS TO PARTICIPATE IN THE GREEN TECHNOLOGY PILOT PROGRAM FOR THE ABOVE-IDENTIFIED APPLICATION. See Instruction Sheet on page 2.

This petition must be timely filed electronically using the USPTO electronic filing system, EFS-Web.

1. By filing this petition:

   Applicant is requesting early publication: Applicant hereby requests early publication under 37 CFR 1.219 and the publication fee set forth in 37 CFR 1.18(d) accompanies this request.

2. By filing this petition: applicant is agreeing to make an election without traverse in a telephonic interview and elect an invention that meets the eligibility requirements for the Green Technology Pilot Program, if the Office determines that the claims are not obviously directed to a single invention. See Instruction Sheet.

3. This request is accompanied by statements of special status for the eligibility requirement.

4. The application contains no more than three (3) independent claims and twenty (20) total claims.

5. The application does not contain any multiple dependent claims.

6. Other attachments: Statement Concerning the Basis for the Special Status

Signature /Allison W. Mages/	Date October 11, 2011
Name (Print/Typed) Allison W. Mages	Registration Number 57,275

Note: Signatures of all the inventors or assignees of record of the entire interest or their representative(s) are required in accordance with 37 CFR 1.33 and 11.18. Please see 37 CFR 1.4(d) for the form of the signature. If necessary, submit multiple forms for more than one signature, see below.*

☐ *Total of _____ forms are submitted.

If you need assistance in completing the form, call 1-800-PTO-9199 and select option 2.

IN THE UNITED STATES PATENT AND TRADEMARK OFFICE

First Named Inventor: Robert Gregory Wagoner	)
Confirmation No.: 1486	)
	)
Serial No.: 13/168,663	)
	)
Filing Date: 06-24-2011	)
	)
Atty Docket No.: 248639	)

VIA EFS
Commissioner for Patents
P.O. Box 1450
Alexandria, VA 22313-1450

Statement Concerning the Basis for the Special Status

SIR:

The present application relates to cooling an electrical device, and more specifically, a heat transfer element for cooling a magnetic inductor. This is particularly useful in a wind turbine. (See [0001], [0039], [0040] and Figures 6-7).

Applicant respectfully submits that Special Status is sought on the basis that the present invention materially contributes to the discovery or development of renewable energy resources.

The undersigned representative may be contacted at the number below to facilitate the resolution of any matters. Please charge any fees that are incurred in connection with this Statement to deposit account no. 09-0470.

Respectfully submitted,

General Electric Company

By : /Allison W. Mages/
Allison W. Mages
Reg. No. 57,275

Dated: October 11, 2011

GE Global Patent Operation
2 Corporate Drive, Suite 648
Shelton, CT 06484
203-944-6730

UNITED STATES PATENT AND TRADEMARK OFFICE

UNITED STATES DEPARTMENT OF COMMERCE
United States Patent and Trademark Office
Address: COMMISSIONER FOR PATENTS
P.O. Box 1450
Alexandria, Virginia 22313-1450
www.uspto.gov

APPLICATION NO.	FILING DATE	FIRST NAMED INVENTOR	ATTORNEY DOCKET NO.	CONFIRMATION NO.
13/168,663	06/24/2011	Robert Gregory Wagoner	248639 (22402-264)	1486

45432 7590 10/27/2011
PATRICK W. RASCHE (22402)
ARMSTRONG TEASDALE LLP
7700 Forsyth Boulevard
Suite 1800
St. Louis, MO 63105

EXAMINER

ART UNIT	PAPER NUMBER
2839	

NOTIFICATION DATE	DELIVERY MODE
10/27/2011	ELECTRONIC

Please find below and/or attached an Office communication concerning this application or proceeding.

The time period for reply, if any, is set in the attached communication.

Notice of the Office communication was sent electronically on above-indicated "Notification Date" to the following e-mail address(es):

uspatents@armstrongteasdale.com

UNITED STATES PATENT AND TRADEMARK OFFICE

Commissioner for Patents
United States Patent and Trademark Office
P.O. Box 1450
Alexandria, VA 22313-1450
www.uspto.gov

PATRICK W. RASCHE (22402)
ARMSTRONG TEASDALE LLP
7700 Forsyth Boulevard
Suite 1800
St. Louis MO 63105

In re Application of	:	
WAGONER et al.	:	DECISION ON PETITION
Application No. 13/168,663	:	TO MAKE SPECIAL UNDER
Filed: June 24, 2011	:	THE GREEN TECHNOLOGY
Attorney Docket No. 248639 (22402-264)	:	PILOT PROGRAM

This is a decision on the petition under 37 CFR 1.102, filed on October 11, 2011, to make the above-identified application special under the pilot program for applications pertaining to Green Technologies as set forth 74 Federal Register Notice 64666 (December 8, 2009) and amended by 75 Federal Register Notice 28554 (May 21, 2010) and 75 Federal Register Notice 69049 (November 10, 2010).

The petition is **GRANTED**.

A grantable petition to make an application special under 37 CFR 1.102 and the pilot program as set forth in 74 FR 64666 must be directed to a nonprovisional application filed under 35 USC 111(a) or be a national stage entry under 35 USC 371, exclusive of any reissue applications.

In order to qualify for special status, the following requirements must be met. 1) The application must have no more than 3 independent claims and no more than 20 total claims. 2) The application must not contain any multiple dependent claims. 3) The petition must state the basis for seeking special status, i.e., the claimed invention either: A) materially enhances the quality of the environment or B) materially contributes to: i) the discovery or development of renewable energy resources, ii) the more efficient utilization and conservation of energy resources, or iii) greenhouse gas emission reduction. 4) If the disclosure is not clear on its face that the claimed invention materially contributes under category (A) or (B), the petition must be accompanied by a statement by the applicant, assignee, or an attorney/agent registered to practice before the Office explaining how the materiality standard is met. 5) A statement that applicant will agree to make an election without traverse in a telephonic interview if a restriction requirement is made by the examiner. 6) The petition to make special must be filed electronically. 7) The petition must be filed at least one day prior to the date that a first Office Action appears in the Patent Application Information Retrieval (PAIR) system. 8) The petition must be accompanied by a request for early publication in compliance with 37 CFR 1.219 and include the publication fee as set forth in 37 CFR 1.18(d).

The requirement for a fee for consideration of the petition to make special for applications pertaining to Green Technologies has been waived.

The instant petition complies with items 1 – 8 above. Accordingly, the above-identified application has been accorded "special" status.

Telephone inquiries concerning this decision should be directed to Lee W. Young at 571-272-4549.

The application is being forwarded to the Technology Center Art Unit 2839 for action on the merits commensurate with this decision.

Lee W. Young
Quality Assurance Specialist
Technology Center 2600

Doc Code: PET.GREEN
Document Description: Petition for Green Tech Pilot

PTO/SB/420 (05-10)
Approved for use through 01/31/2011. OMB 0651-0062
U.S. Patent and Trademark Office; U. S. DEPARTMENT OF COMMERCE
Under the Paperwork Reduction Act of 1995, no persons are required to respond to a collection of information unless it displays a valid OMB control number.

PETITION TO MAKE SPECIAL UNDER THE GREEN TECHNOLOGY PILOT PROGRAM

Attorney Docket Number: 34272US1	Application Number (if known):	Filing date: 24 June 2011

First Named Inventor: Steven L. Douglas

Title: BURNER NOZZLE

APPLICANT HEREBY REQUESTS TO PARTICIPATE IN THE GREEN TECHNOLOGY PILOT PROGRAM FOR THE ABOVE-IDENTIFIED APPLICATION. See Instruction Sheet on page 2.

This petition must be timely filed electronically using the USPTO electronic filing system, EFS-Web.

1. By filing this petition:

   Applicant is requesting early publication: Applicant hereby requests early publication under 37 CFR 1.219 and the publication fee set forth in 37 CFR 1.18(d) accompanies this request.

2. By filing this petition: applicant is agreeing to make an election without traverse in a telephonic interview and elect an invention that meets the eligibility requirements set forth in the notice titled "Pilot Program for Green Technologies Including Greenhouse Gas Reduction," as modified by the notice titled "Elimination of Classification Requirement in the Green Technology Pilot Program," each of which was published in the Federal Register, if the Office determines that the claims are not obviously directed to a single invention.

3. This request is accompanied by statements of special status for the eligibility requirement.

4. The application contains no more than three (3) independent claims and twenty (20) total claims.

5. The application does not contain any multiple dependent claims.

6. Other attachments: _____

Signature /Kyle W. Sherrill/	Date 24 June 2011
Name (Print/Typed) Kyle W. Sherrill	Registration Number 62130

***Note**: Signatures of all the inventors or assignees of record of the entire interest or their representative(s) are required in accordance with 37 CFR 1.33 and 11.18. Please see 37 CFR 1.4(d) for the form of the signature. If necessary, submit multiple forms for more than one signature, see below*.*

☑ *Total of 5 forms are submitted.

The information is required to obtain or retain a benefit by the public which is to file (and by the USPTO to process) an application. Confidentiality is governed by 35 U.S.C. 122 and 37 CFR 1.11 and 1.14. This collection is estimated to take 1 hour to complete, including gathering, preparing, and submitting the completed application form to the USPTO. Time will vary depending upon the individual case. Any comments on the amount of time you require to complete this form and/or suggestions for reducing this burden, should be sent to the Chief Information Officer, U.S. Patent and Trademark Office, U.S. Department of Commerce, P.O. Box 1450, Alexandria, VA 22313-1450. DO NOT SEND FEES OR COMPLETED FORMS TO THIS ADDRESS. **SEND TO: Commissioner for Patents, P.O. Box 1450, Alexandria, VA 22313-1450.**

If you need assistance in completing the form, call 1-800-PTO-9199 and select option 2.

Under the Paperwork Reduction Act of 1995, no persons are required to respond to a collection of information unless it displays a valid OMB control number.

Instruction Sheet for Petition to Make Special Under the Green Technology Pilot Program

(Not to be Submitted to the USPTO)

The following is a summary of the requirements (for more information see the notices (i) "Pilot Program for Green Technologies Including Greenhouse Gas Reduction" and (ii) "Elimination of Classification Requirement in the Green Technology Pilot Program," available on the USPTO web site at http://www.uspto.gov/patents/init_events/green_tech.jsp):

(1) The application must be a non-reissue, non-provisional utility application filed under 35 U.S.C. 111(a), or an international application that has entered the national stage in compliance with 35 U.S.C. 371. The application must be previously filed before the publication date of the notice cited above. Reexamination proceedings are excluded from this pilot program.

(2) The application must contain three or fewer independent claims and twenty or fewer total claims. The application must not contain any multiple dependent claims. For an application that contains more than three independent claims or twenty total claims, or multiple dependent claims, applicant must file a preliminary amendment in compliance with 37 CFR 1.121 to cancel the excess claims and/or the multiple dependent claims at the time the petition to make special is filed.

(3) The claims must be directed to a single invention that materially enhances the quality of the environment, or that materially contributes to: (1) the discovery or development of renewable energy resources; (2) the more efficient utilization and conservation of energy resources; or (3) green house gas emission reduction (see the eligibility requirements of sections II and III of the notice (i) cited above). The petition must include a statement that, if the USPTO determines that the claims are directed to multiple inventions (e.g., in a restriction requirement), applicant will agree to make an election without traverse in a telephonic interview, and elect an invention that meets the eligibility requirements in section II or III of the notice (i) cited above.

(4) The petition to make special must be timely filed electronically using the USPTO electronic filing system, EFS-Web, and selecting the document description of "Petition for Green Tech Pilot" on the EFS-Web screen. Applicant should use form PTO/SB/420, which is available as a Portable Document Format (PDF) fillable form in EFS-Web and on the USPTO Web site.

(5) The petition to make special must be filed at least one day prior to the date that a first Office action (which may be an Office action containing only a restriction requirement) appears in the Patent Application Information Retrieval (PAIR) system. Applicant may check the status of the application using PAIR.

(6) The petition to make special must be accompanied by a request for early publication in compliance with 37 CFR 1.219 and the publication fee set forth in 37 CFR 1.18(d).

Privacy Act Statement

The **Privacy Act of 1974 (P.L. 93-579)** requires that you be given certain information in connection with your submission of the attached form related to a patent application or patent. Accordingly, pursuant to the requirements of the Act, please be advised that: (1) the general authority for the collection of this information is 35 U.S.C. 2(b)(2); (2) furnishing of the information solicited is voluntary; and (3) the principal purpose for which the information is used by the U.S. Patent and Trademark Office is to process and/or examine your submission related to a patent application or patent. If you do not furnish the requested information, the U.S. Patent and Trademark Office may not be able to process and/or examine your submission, which may result in termination of proceedings or abandonment of the application or expiration of the patent.

The information provided by you in this form will be subject to the following routine uses:

1. The information on this form will be treated confidentially to the extent allowed under the Freedom of Information Act (5 U.S.C. 552) and the Privacy Act (5 U.S.C 552a). Records from this system of records may be disclosed to the Department of Justice to determine whether disclosure of these records is required by the Freedom of Information Act.
2. A record from this system of records may be disclosed, as a routine use, in the course of presenting evidence to a court, magistrate, or administrative tribunal, including disclosures to opposing counsel in the course of settlement negotiations.
3. A record in this system of records may be disclosed, as a routine use, to a Member of Congress submitting a request involving an individual, to whom the record pertains, when the individual has requested assistance from the Member with respect to the subject matter of the record.
4. A record in this system of records may be disclosed, as a routine use, to a contractor of the Agency having need for the information in order to perform a contract. Recipients of information shall be required to comply with the requirements of the Privacy Act of 1974, as amended, pursuant to 5 U.S.C. 552a(m).
5. A record related to an International Application filed under the Patent Cooperation Treaty in this system of records may be disclosed, as a routine use, to the International Bureau of the World Intellectual Property Organization, pursuant to the Patent Cooperation Treaty.
6. A record in this system of records may be disclosed, as a routine use, to another federal agency for purposes of National Security review (35 U.S.C. 181) and for review pursuant to the Atomic Energy Act (42 U.S.C. 218(c)).
7. A record from this system of records may be disclosed, as a routine use, to the Administrator, General Services, or his/her designee, during an inspection of records conducted by GSA as part of that agency's responsibility to recommend improvements in records management practices and programs, under authority of 44 U.S.C. 2904 and 2906. Such disclosure shall be made in accordance with the GSA regulations governing inspection of records for this purpose, and any other relevant (*i.e.*, GSA or Commerce) directive. Such disclosure shall not be used to make determinations about individuals.
8. A record from this system of records may be disclosed, as a routine use, to the public after either publication of the application pursuant to 35 U.S.C. 122(b) or issuance of a patent pursuant to 35 U.S.C. 151. Further, a record may be disclosed, subject to the limitations of 37 CFR 1.14, as a routine use, to the public if the record was filed in an application which became abandoned or in which the proceedings were terminated and which application is referenced by either a published application, an application open to public inspection or an issued patent.
9. A record from this system of records may be disclosed, as a routine use, to a Federal, State, or local law enforcement agency, if the USPTO becomes aware of a violation or potential violation of law or regulation.

UNITED STATES PATENT AND TRADEMARK OFFICE

UNITED STATES DEPARTMENT OF COMMERCE
United States Patent and Trademark Office
Address: COMMISSIONER FOR PATENTS
P.O. Box 1450
Alexandria, Virginia 22313-1450
www.uspto.gov

APPLICATION NO.	FILING DATE	FIRST NAMED INVENTOR	ATTORNEY DOCKET NO.	CONFIRMATION NO.
13/168,732	06/24/2011	Steven L. DOUGLAS	34272US1	1638

28841 7590 07/25/2011
ConocoPhillips Company
IP Services Group Attn: DOCKETING
600 N. Dairy Ashford
Bldg. ML-1065
Houston, TX 77079

EXAMINER

ART UNIT	PAPER NUMBER
3749	

NOTIFICATION DATE	DELIVERY MODE
07/25/2011	ELECTRONIC

Please find below and/or attached an Office communication concerning this application or proceeding.

The time period for reply, if any, is set in the attached communication.

Notice of the Office communication was sent electronically on above-indicated "Notification Date" to the following e-mail address(es):

Legal-IP@conocophillips.com

UNITED STATES PATENT AND TRADEMARK OFFICE

Commissioner for Patents
United States Patent and Trademark Office
P.O. Box 1450
Alexandria, VA 22313-1450
www.uspto.gov

ConocoPhillips Company
IP Services Group Attn: DOCKETING
600 N. Dairy Ashford
Bldg. ML-1065
Houston, TX 77079

In re Application of	:	
DOUGLAS, STEVEN L.	:	DECISION ON PETITION
Application No. 13/168,732	:	TO MAKE SPECIAL UNDER
Filed: June 24, 2011	:	THE GREEN TECHNOLOGY
Attorney Docket No. 34272US1	:	PILOT PROGRAM

This is a decision on the petition under 37 CFR 1.102, filed June 24, 2011, to make the above-identified application special under the pilot program for applications pertaining to Green Technologies as set forth in 74 Federal Register Notice 64666 (December 8, 2009) and amended by 75 Federal Register Notice 28554 (May 21, 2010) and 75 Federal Register Notice 69049 (November 10, 2010).

The petition is **DISMISSED**.

If reconsideration of this decision is desired, a petition for reconsideration must be filed within ONE (1) MONTH OR THIRTY (30) DAYS from the mail date of this decision, whichever is longer. No extension of this time limit can be granted under 37 CFR 1.136(a) or (b). The petition for reconsideration should include an exhaustive attempt to provide the lacking item(s) noted below, since, after a decision on the petition for reconsideration, no further reconsideration or review of the matter will be undertaken by the Director.

A grantable petition to make an application special under 37 CFR 1.102 and the pilot program as set forth in 74 FR 64666 must be directed to a nonprovisional application filed under 35 USC 111(a) or be a national stage entry under 35 USC 371, exclusive of any reissue applications and be filed prior to the date of the notice, December 8, 2009.

In order to qualify for special status, the following requirements must be met. 1) The application must have no more than 3 independent claims and no more than 20 total claims. 2) The application must not contain any multiple dependent claims. 3) The petition must state the basis for seeking special status, i.e., the claimed invention either: A) materially enhances the quality of the environment or B) materially contributes to: i) the discovery or development of renewable energy resources, ii) the more efficient utilization and conservation of energy resources, or iii) greenhouse gas emission reduction. 4) If the disclosure is not clear on its face that the claimed invention materially contributes under category (A) or (B), the petition must be accompanied by

a statement by the applicant, assignee, or an attorney/agent registered to practice before the Office explaining how the materiality standard is met. 5) A statement that applicant will agree to make an election without traverse in a telephonic interview if a restriction requirement is made by the examiner. 6) The petition to make special must be filed electronically. 7) The petition must be filed at least one day prior to the date that a first Office Action appears in the Patent Application Information Retrieval (PAIR) system. 8) The petition must be accompanied by a request for early publication in compliance with 37 CFR 1.219 and include the publication fee as set forth in 37 CFR 1.18(d).

The requirement for a fee for consideration of the petition to make special for applications pertaining to Green Technologies has been waived.

In regard to item 4, petitioner should note that the instant petition includes a statement identifying the basis for the special status (i.e., whether the instant invention (1) materially enhances the quality of the environment or materially contributes to (2) development of renewable energy resources or energy conservation, or (3) greenhouse gas reduction) as required by sections II and III of the notice. However, as stated in the notice, applicant must also provide a statement pertaining to the materiality standard if the application disclosure is not clear on its face as to the materiality of the basis for the special status of the invention. This petition lacks such a statement and it is not agreed that the application on its face meets that materiality standard. Petitioner states that the claimed invention relates to green technology. This is not convincing. For example, it is not clear how the claimed gasification reactor system will provide and enhance the quality of the environment or contribute to development of renewable energy resources or energy conservation or greenhouse gas reduction.

Any reconsideration of this decision should be submitted through the USPTO electronic filing system, EFS-Web, and selecting the document description of "Petition for Green Tech Pilot" on the EFS-Web screen.

Telephone inquiries concerning this decision should be directed to Henry Yuen at 571-272-4856. The application is being forwarded to the Technology Center Art Unit 3749 for action in its regular turn.

/Henry C. Yuen/

Henry C. Yuen
Quality Assurance Specialist
Technology Center 3700

Doc Code: PET.GREEN
Document Description: Petition for Green Tech Pilot

PTO/SB/420 (05-10)
Approved for use through 01/31/2011. OMB 0651-0062
U.S. Patent and Trademark Office; U. S. DEPARTMENT OF COMMERCE
Under the Paperwork Reduction Act of 1995, no persons are required to respond to a collection of information unless it displays a valid OMB control number.

PETITION TO MAKE SPECIAL UNDER THE GREEN TECHNOLOGY PILOT PROGRAM

Attorney Docket Number: 34272US1	Application Number (if known): 13168732	Filing date: 24 June 2011

First Named Inventor: Steven L. Douglas

Title: BURNER NOZZLE

APPLICANT HEREBY REQUESTS TO PARTICIPATE IN THE GREEN TECHNOLOGY PILOT PROGRAM FOR THE ABOVE-IDENTIFIED APPLICATION. See Instruction Sheet on page 2.

This petition must be timely filed electronically using the USPTO electronic filing system, EFS-Web.

1. By filing this petition:

   Applicant is requesting early publication: Applicant hereby requests early publication under 37 CFR 1.219 and the publication fee set forth in 37 CFR 1.18(d) accompanies this request.

2. By filing this petition: applicant is agreeing to make an election without traverse in a telephonic interview and elect an invention that meets the eligibility requirements set forth in the notice titled "Pilot Program for Green Technologies Including Greenhouse Gas Reduction," as modified by the notice titled "Elimination of Classification Requirement in the Green Technology Pilot Program," each of which was published in the Federal Register, if the Office determines that the claims are not obviously directed to a single invention.

3. This request is accompanied by statements of special status for the eligibility requirement.

4. The application contains no more than three (3) independent claims and twenty (20) total claims.

5. The application does not contain any multiple dependent claims.

6. Other attachments: _____

Signature /Kyle W. Sherrill/	Date 15 August 2011
Name (Print/Typed) Kyle W. Sherrill	Registration Number 62130

***Note**: Signatures of all the inventors or assignees of record of the entire interest or their representative(s) are required in accordance with 37 CFR 1.33 and 11.18. Please see 37 CFR 1.4(d) for the form of the signature. If necessary, submit multiple forms for more than one signature, see below*.*

☑ *Total of 2 forms are submitted.

The information is required to obtain or retain a benefit by the public which is to file (and by the USPTO to process) an application. Confidentiality is governed by 35 U.S.C. 122 and 37 CFR 1.11 and 1.14. This collection is estimated to take 1 hour to complete, including gathering, preparing, and submitting the completed application form to the USPTO. Time will vary depending upon the individual case. Any comments on the amount of time you require to complete this form and/or suggestions for reducing this burden, should be sent to the Chief Information Officer, U.S. Patent and Trademark Office, U.S. Department of Commerce, P.O. Box 1450, Alexandria, VA 22313-1450. DO NOT SEND FEES OR COMPLETED FORMS TO THIS ADDRESS. **SEND TO: Commissioner for Patents, P.O. Box 1450, Alexandria, VA 22313-1450.**

If you need assistance in completing the form, call 1-800-PTO-9199 and select option 2.

Under the Paperwork Reduction Act of 1995, no persons are required to respond to a collection of information unless it displays a valid OMB control number.

Instruction Sheet for Petition to Make Special Under the Green Technology Pilot Program

(Not to be Submitted to the USPTO)

The following is a summary of the requirements (for more information see the notices (i) "Pilot Program for Green Technologies Including Greenhouse Gas Reduction" and (ii) "Elimination of Classification Requirement in the Green Technology Pilot Program," available on the USPTO web site at http://www.uspto.gov/patents/init_events/green_tech.jsp):

(1) The application must be a non-reissue, non-provisional utility application filed under 35 U.S.C. 111(a), or an international application that has entered the national stage in compliance with 35 U.S.C. 371. The application must be previously filed before the publication date of the notice cited above. Reexamination proceedings are excluded from this pilot program.

(2) The application must contain three or fewer independent claims and twenty or fewer total claims. The application must not contain any multiple dependent claims. For an application that contains more than three independent claims or twenty total claims, or multiple dependent claims, applicant must file a preliminary amendment in compliance with 37 CFR 1.121 to cancel the excess claims and/or the multiple dependent claims at the time the petition to make special is filed.

(3) The claims must be directed to a single invention that materially enhances the quality of the environment, or that materially contributes to: (1) the discovery or development of renewable energy resources; (2) the more efficient utilization and conservation of energy resources; or (3) green house gas emission reduction (see the eligibility requirements of sections II and III of the notice (i) cited above). The petition must include a statement that, if the USPTO determines that the claims are directed to multiple inventions (e.g., in a restriction requirement), applicant will agree to make an election without traverse in a telephonic interview, and elect an invention that meets the eligibility requirements in section II or III of the notice (i) cited above.

(4) The petition to make special must be timely filed electronically using the USPTO electronic filing system, EFS-Web, and selecting the document description of "Petition for Green Tech Pilot" on the EFS-Web screen. Applicant should use form PTO/SB/420, which is available as a Portable Document Format (PDF) fillable form in EFS-Web and on the USPTO Web site.

(5) The petition to make special must be filed at least one day prior to the date that a first Office action (which may be an Office action containing only a restriction requirement) appears in the Patent Application Information Retrieval (PAIR) system. Applicant may check the status of the application using PAIR.

(6) The petition to make special must be accompanied by a request for early publication in compliance with 37 CFR 1.219 and the publication fee set forth in 37 CFR 1.18(d).

Privacy Act Statement

The **Privacy Act of 1974 (P.L. 93-579)** requires that you be given certain information in connection with your submission of the attached form related to a patent application or patent. Accordingly, pursuant to the requirements of the Act, please be advised that: (1) the general authority for the collection of this information is 35 U.S.C. 2(b)(2); (2) furnishing of the information solicited is voluntary; and (3) the principal purpose for which the information is used by the U.S. Patent and Trademark Office is to process and/or examine your submission related to a patent application or patent. If you do not furnish the requested information, the U.S. Patent and Trademark Office may not be able to process and/or examine your submission, which may result in termination of proceedings or abandonment of the application or expiration of the patent.

The information provided by you in this form will be subject to the following routine uses:

1. The information on this form will be treated confidentially to the extent allowed under the Freedom of Information Act (5 U.S.C. 552) and the Privacy Act (5 U.S.C 552a). Records from this system of records may be disclosed to the Department of Justice to determine whether disclosure of these records is required by the Freedom of Information Act.
2. A record from this system of records may be disclosed, as a routine use, in the course of presenting evidence to a court, magistrate, or administrative tribunal, including disclosures to opposing counsel in the course of settlement negotiations.
3. A record in this system of records may be disclosed, as a routine use, to a Member of Congress submitting a request involving an individual, to whom the record pertains, when the individual has requested assistance from the Member with respect to the subject matter of the record.
4. A record in this system of records may be disclosed, as a routine use, to a contractor of the Agency having need for the information in order to perform a contract. Recipients of information shall be required to comply with the requirements of the Privacy Act of 1974, as amended, pursuant to 5 U.S.C. 552a(m).
5. A record related to an International Application filed under the Patent Cooperation Treaty in this system of records may be disclosed, as a routine use, to the International Bureau of the World Intellectual Property Organization, pursuant to the Patent Cooperation Treaty.
6. A record in this system of records may be disclosed, as a routine use, to another federal agency for purposes of National Security review (35 U.S.C. 181) and for review pursuant to the Atomic Energy Act (42 U.S.C. 218(c)).
7. A record from this system of records may be disclosed, as a routine use, to the Administrator, General Services, or his/her designee, during an inspection of records conducted by GSA as part of that agency's responsibility to recommend improvements in records management practices and programs, under authority of 44 U.S.C. 2904 and 2906. Such disclosure shall be made in accordance with the GSA regulations governing inspection of records for this purpose, and any other relevant (*i.e.*, GSA or Commerce) directive. Such disclosure shall not be used to make determinations about individuals.
8. A record from this system of records may be disclosed, as a routine use, to the public after either publication of the application pursuant to 35 U.S.C. 122(b) or issuance of a patent pursuant to 35 U.S.C. 151. Further, a record may be disclosed, subject to the limitations of 37 CFR 1.14, as a routine use, to the public if the record was filed in an application which became abandoned or in which the proceedings were terminated and which application is referenced by either a published application, an application open to public inspection or an issued patent.
9. A record from this system of records may be disclosed, as a routine use, to a Federal, State, or local law enforcement agency, if the USPTO becomes aware of a violation or potential violation of law or regulation.

IN THE UNITED STATES PATENT AND TRADEMARK OFFICE

Appl. No.:	13168732	Confirmation No. 1638
Applicants: .	Steven L. Douglas	
Filed:	24 June, 2011	
TC/A.U.:	3749 (Prospective)	
Examiner:	Nikhil P. Mashruwala (Prospective)	
Docket No.:	34272US1	
Title:	BURNER NOZZLE	
Customer No.: 28841		

Commissioner for Patents
P.O. Box 1450
Alexandria VA 22313-1450

STATEMENT SUPPORTING SPECIAL STATUS:
GREEN TECHNOLOGY PILOT PROGRAM

Dear Commissioner:

For more than a century, processes for complete combustion of hydrocarbon feedstocks (e.g., coal, petroleum coke, fuel oil, etc.) have been utilized for energy production. More recently, gasification technologies have been developed that more efficiently utilize such feedstocks, resulting in decreased CO_2 emissions into the environment. These gasification processes are typically conducted at high pressures, which provides the additional benefits of allowing (1) more efficient separation of CO_2 from the exhaust gas for underground sequestration, and (2) more efficient treatment of the exhaust gas to remove polluting compounds (such as sulfur-containing molecules). These benefits are well-known in the art.

The current application deals with an improvement to hydrocarbon gasification technology that may assist in the wide-spread commercial implementation of gasification technology, thereby replacing more polluting (and less-efficient) conventional combustion processes. For these reasons, the parent application of the current divisional application was granted admission to the Green Technology Pilot Program. Applicant respectfully requests admission for the current application as well.

IN THE UNITED STATES PATENT AND TRADEMARK OFFICE

Respectfully Submitted,

Date: August 15, 2011

By: /Kyle W. Sherrill/

Registration No. 62,130
Email: kyle.w.sherrill@conocophillips.com
(281) 293-1077
(281) 293-2127 (Fax)

CONOCOPHILLIPS COMPANY – I.P. Legal
Attn: Docketing
600 N. Dairy Ashford, ML-1065
Houston, TX 77079

UNITED STATES PATENT AND TRADEMARK OFFICE

UNITED STATES DEPARTMENT OF COMMERCE
United States Patent and Trademark Office
Address: COMMISSIONER FOR PATENTS
P.O. Box 1450
Alexandria, Virginia 22313-1450
www.uspto.gov

APPLICATION NO.	FILING DATE	FIRST NAMED INVENTOR	ATTORNEY DOCKET NO.	CONFIRMATION NO.
13/168,732	06/24/2011	Steven L. DOUGLAS	34272US1	1638

28841 7590 08/29/2011
ConocoPhillips Company
IP Services Group Attn: DOCKETING
600 N. Dairy Ashford
Bldg. ML-1065
Houston, TX 77079

EXAMINER
MASHRUWALA, NIKHIL P

ART UNIT	PAPER NUMBER
3749	

NOTIFICATION DATE	DELIVERY MODE
08/29/2011	ELECTRONIC

Please find below and/or attached an Office communication concerning this application or proceeding.

The time period for reply, if any, is set in the attached communication.

Notice of the Office communication was sent electronically on above-indicated "Notification Date" to the following e-mail address(es):

Legal-IP@conocophillips.com

UNITED STATES PATENT AND TRADEMARK OFFICE

Commissioner for Patents
United States Patent and Trademark Office
P.O. Box 1450
Alexandria, VA 22313-1450
www.uspto.gov

ConocoPhillips Company
IP Services Group Attn: DOCKETING
600 N. Dairy Ashford
Bldg. ML-1065
Houston TX 77079

8/26/11

In re Application of	:	
Douglas	:	DECISION ON PETITION
Application No. 13/168,732	:	TO MAKE SPECIAL UNDER
Filed: 6/24/2011	:	THE GREEN TECHNOLOGY
Attorney Docket No. **34272US1**	:	PILOT PROGRAM

This is a decision on the request for reconsideration, filed 8/15/2011, to make the above-identified application special under the pilot program for applications pertaining to Green Technologies as set forth in 74 Federal Register Notice 64666 (December 8, 2009) and amended by 75 Federal Register Notice 28554 (May 21, 2010) and 75 Federal Register Notice 69049 (November 10, 2010).

The petition is **GRANTED**.

A grantable petition to make an application special under 37 CFR 1.102 and the pilot program as set forth in 74 FR 64666 must be directed to a nonprovisional application filed under 35 USC 111(a) or be a national stage entry under 35 USC 371, exclusive of any reissue applications.

In order to qualify for special status, the following requirements must be met. 1) The application must have no more than 3 independent claims and no more than 20 total claims. 2) The application must not contain any multiple dependent claims. 3) The petition must state the basis for seeking special status, i.e., the claimed invention either: A) materially enhances the quality of the environment or B) materially contributes to: i) the discovery or development of renewable energy resources, ii) the more efficient utilization and conservation of energy resources, or iii) greenhouse gas emission reduction. 4) If the disclosure is not clear on its face that the claimed invention materially contributes under category (A) or (B), the petition must be accompanied by a statement by the applicant, assignee, or an attorney/agent registered to practice before the Office explaining how the materiality standard is met. 5) A statement that applicant will agree to make an election without traverse in a telephonic interview if a restriction requirement is made by the examiner. 6) The petition to make special must be filed electronically. 7) The petition must be filed at least one day prior to the date that a first Office Action appears in the Patent Application Information Retrieval (PAIR) system. 8) The petition must be accompanied by a

request for early publication in compliance with 37 CFR 1.219 and include the publication fee as set forth in 37 CFR 1.18(d).

The requirement for a fee for consideration of the petition to make special for applications pertaining to Green Technologies has been waived.

The instant petition complies with items 1 – 8 above. Accordingly, the above-identified application has been accorded "special" status.

Telephone inquires concerning this decision should be directed to Tom Dunn at 571-272-1171.

The application is being forwarded to the Technology Center Art Unit 3749 for action on the merits commensurate with this decision.

/Tom Dunn/

Tom Dunn
Quality Assurance Specialist
Technology Center 1700

UNITED STATES PATENT AND TRADEMARK OFFICE

Commissioner for Patents
United States Patent and Trademark Office
P.O. Box 1450
Alexandria, VA 22313-1450
www.uspto.gov

FOLEY & LARDNER LLP
777 EAST WISCONSIN AVENUE
MILWAUKEE WI 53202-5306

MAILED

SEP 19 2011

OFFICE OF PETITIONS

In re Application of
Garascia, et al.
Application No. 13/168,740
Filed: 24 June, 2011
Attorney Docket No. 069236-1158 069236-1158

DECISION ON PETITION

This is a decision on the petition filed on 7 September, 2011, pursuant to 37 C.F.R. §1.47

NOTE:

Petitioner appears to have filed the instant petition via EFS, but failed to submit with the petition the petition fee.

Petitioner did, however, authorize the fee and the fee is charged as authorized.

Petitioner is respectfully requested to ensure that fees are filed with petitions on deposit.

The petition as considered pursuant to 37 C.F.R. §1.47(a) is **DISMISSED**.

Rule 47 applicant is given TWO (2) MONTHS from the mailing date of this decision to reply, correcting the below-noted deficiencies. Any reply should be entitled "Request for Reconsideration of Petition Pursuant to 37 C.F.R. §1.47(a)," and should address the deficiencies noted below, except that the reply may include an oath or declaration executed by the non-signing inventor. **FAILURE TO RESPOND WILL RESULT IN ABANDONMENT OF THE APPLICATION.** Any extensions of time will be governed by 37 C.F.R. §1.136(a).

This is **not** a final agency action within the meaning of 5 U.S.C. §704.

A grantable petition pursuant to 37 C.F.R. §1.47(a) requires: (1) petition and fee; (2) proof that the non-signing inventor cannot be reached or refuses to sign the oath or declaration after having been presented with the application papers (specification: description, claims and drawings); (3) an acceptable oath or declaration in compliance with 35 U.S.C. §§ 115 and 116; and (4) a

statement of the last known address of the non-signing inventor(s)—with diligence in the effort to ascertain the validity of the address set forth as the reasonably believed to be last known/current/valid address.

Petitioner does not seem to have worked through the requirements of the petition, as set forth above, in satisfaction of those requirements. (*See, generally:* MPEP §409.03, and §409.03(a)—the applicable statute (35 U.S.C.§ 116).

In particular, Petitioner has not as of this writing satisfied the requirement(s) of the petition as listed above and discussed below.

Petitioners' attentions always are directed to the regulations at 37 C.F.R. §1.47(a) and to the guidance provided in the Commentary in the Manual of Patent Examining Procedure, including that at MPEP §409.03, et seq.

Petitioners always are reminded that for transmission by Email of any document (e.g., transmittal description, claims, abstract, drawing(s)) to be accepted by the Office, written acknowledgment of receipt and readability will be required.

BACKGROUND

The record reflects as follows:

The application was deposited on 24 June, 2011, without, *inter alia*, a fully executed oath/declaration.

On 8 July, 2011, the Office mailed a Notice of Missing Parts requiring, *inter alia*, a fully-executed oath/declaration.

On 7 September, 2011, Petitioner Matthew D. Rabe (Reg. No. 61,819) filed, *inter alia*, a petition pursuant to the regulations at 37 C.F.R. §1.47, with an oath/declaration executed by Mr. Garascia and Mr. Arena for themselves and on behalf of the non-signing inventor Streve Esshaki (Mr. Esshaki) and an averment of transmittal and receipt of the entire application (description, claims, abstract drawings) to the non-signing inventor and an averment of inclusion of a signed return receipt—however, that document does not/those documents do not appear to be present in the application file—at and with a statement of a valid/current/reasonably believed to be last known mailing address for the non-signing inventor. Therefore, while it appears that Petitioner may have provided a showing that one non-signing inventor actually and/or constructively refused to sign the oath or declaration after having been presented with the application papers (specification: description, claims and drawings), the absence of materials referenced makes this unclear. On

any renewed petition, Petitioner should ensure that all of the requirements under the Rule have been satisfied, to wit: (1) petition and fee; (2) proof that the non-signing inventor cannot be reached or refuses to sign the oath or declaration after having been presented with the application papers (specification: description, claims and drawings); (3) an acceptable oath or declaration in compliance with 35 U.S.C. §§ 115 and 116; and (4) a statement of the last known address of the non-signing inventor(s)—with diligence in the effort to ascertain the validity of the address set forth as the reasonably believed to be last known/current/valid address.

Thus, it does not appear that Petitioner satisfied the requirements under the Rule.

In view of the conflict and/or incompleteness of the showing, it does not appear as of this writing that Petitioner has satisfied the burden under the Rule. Thus Petitioner failed to make the showing as required under the Rule (37 C.F.R. §1.47(a)) and consistent with the guidance in the Commentary at MPEP §409.03, and §409.03(a).

Petitioners always are reminded:

- *for transmission by Email of any document to be accepted by the Office, written acknowledgment of receipt and readability of the message and all applicable attachments of required materials must be provided; and*

- *of the duties of candor to—with requirement for diligent inquiry before—the Office and to satisfy the Rules of Practice and the guidance in the Commentary at MPEP §409.03, and §409.03(a), et seq.*

Petitioner will find it beneficial to step through the requirements of a grantable petition under 37 C.F.R. §1.47(a) (i.e., (1) petition and fee; (2) proof that the non-signing inventor cannot be reached or refuses to sign the oath or declaration after having been presented with the application papers (specification: description, claims and drawings); (3) an acceptable oath or declaration in compliance with 35 U.S.C. §§ 115 and 116; and (4) a statement of the last known address of the non-signing inventor(s)—with diligence in the effort to ascertain the validity of the address set forth as the reasonably believed to be last known/current/valid address) and satisfy himself that he has complied with these requirements on submission of any renewed petition. (*See also*: the guidance in the Commentary at MPEP §409.03, and §409.03(a), et seq.)

The availability of applications and application papers online to applicants/practitioners who diligently associate their Customer Number with the respective application(s) now provides an applicant/practitioner on-demand information as to events/transactions in an application. Thus, now if one wishes to know the progress in and/or status of an application or the accuracy of the data therein, one need only look at the file online.

Out of an abundance of caution, Petitioners always are reminded that those registered to practice *and* all others who make representations before the Office must inquire into the underlying facts of representations made to the Office and support averments with the appropriate documentation–since all owe to the Office the continuing duty to disclose.[1]

The instant petition pursuant to 37 C.F.R. §1.47(a) is **dismissed**.

Further correspondence with respect to this matter should be addressed as follows:

By mail: Mail Stop PETITIONS
Commissioner for Patents
Post Office Box 1450
Alexandria, VA 22313-1450

By hand: Customer Service Window
Mail Stop Petitions
Randolph Building
401 Dulany Street
Alexandria, VA 22314

By FAX: (571) 273-8300
ATTN: Office of Petitions

[1] See supplement of 17 June, 1999. The Patent and Trademark Office is relying on petitioner's duty of candor and good faith and accepting a statement made by Petitioner. See Changes to Patent Practice and Procedure, 62 Fed. Reg. at 53160 and 53178, 1203 Off. Gaz. Pat. Office at 88 and 103 (responses to comments 64 and 109)(applicant obligated under 37 C.F.R. §10.18 to inquire into the underlying facts and circumstances when providing statements to the Patent and Trademark Office). See specifically, the regulations at 37 C.F.R. §10.18.

While telephone inquiries regarding this decision may be directed to the undersigned at (571) 272-3214—it is noted, however, that all practice before the Office is in writing (see: 37 C.F.R. §1.2[2]) and the proper authority for action on any matter in this regard are the statutes (35 U.S.C.), regulations (37 C.F.R.) and the commentary on policy (MPEP). Therefore, no telephone discussion may be controlling or considered authority for Petitioner's action(s).

/John J. Gillon, Jr./
John J. Gillon, Jr.
Senior Attorney
Office of Petitions

[2] The regulations at 37 C.F.R. §1.2 provide:
§1.2 Business to be transacted in writing.
All business with the Patent and Trademark Office should be transacted in writing. The personal attendance of applicants or their attorneys or agents at the Patent and Trademark Office is unnecessary. The action of the Patent and Trademark Office will be based exclusively on the written record in the Office. No attention will be paid to any alleged oral promise, stipulation, or understanding in relation to which there is disagreement or doubt.

UNITED STATES PATENT AND TRADEMARK OFFICE

Commissioner for Patents
United States Patent and Trademark Office
P.O. Box 1450
Alexandria, VA 22313-1450
www.uspto.gov

FOLEY & LARDNER LLP
777 EAST WISCONSIN AVENUE
MILWAUKEE WI 53202-5306

MAILED

JAN 06 2012

OFFICE OF PETITIONS

In re Application of
Garascia, et al.
Application No. 13/168,740
Filed: 24 June, 2011
Attorney Docket No. 069236-1158 069236-1158

DECISION ON PETITION

This is a decision on the petition filed on 11 November, 2011, pursuant to 37 C.F.R. §1.47

The petition as considered pursuant to 37 C.F.R. §1.47(a) is **GRANTED**.

A grantable petition pursuant to 37 C.F.R. §1.47(a) requires: (1) petition and fee; (2) proof that the non-signing inventor cannot be reached or refuses to sign the oath or declaration after having been presented with the application papers (specification: description, claims and drawings); (3) an acceptable oath or declaration in compliance with 35 U.S.C. §§ 115 and 116; and (4) a statement of the last known address of the non-signing inventor(s)—with diligence in the effort to ascertain the validity of the address set forth as the reasonably believed to be last known/current/valid address.

Petitioners' attentions always are directed to the regulations at 37 C.F.R. §1.47(a) and to the guidance provided in the Commentary in the Manual of Patent Examining Procedure, including that at MPEP §409.03, et seq.

Petitioners always are reminded that for transmission by Email of any document (e.g., transmittal description, claims, abstract, drawing(s)) to be accepted by the Office, written acknowledgment of receipt and readability will be required.

BACKGROUND

The record reflects as follows:

The application was deposited on 24 June, 2011, without, *inter alia*, a fully executed oath/declaration.

On 8 July, 2011, the Office mailed a Notice of Missing Parts requiring, *inter alia*, a fully-executed oath/declaration.

On 7 September, 2011, Petitioner Matthew D. Rabe (Reg. No. 61,819) filed, *inter alia*, a petition pursuant to the regulations at 37 C.F.R. §1.47, with an oath/declaration executed by Mr. Garascia and Mr. Arena for themselves and on behalf of the non-signing inventor Streve Esshaki (Mr. Esshaki) and an averment of transmittal and receipt of the entire application (description, claims, abstract drawings) to the non-signing inventor and an averment of inclusion of a signed return receipt—however, those documents did not appear to be present in the application file—at and with a statement of a valid/current/reasonably believed to be last known mailing address for the non-signing inventor. The petition fee, while not paid on the deposit of the petition was authorized and thereafter was charged. While it appeared that Petitioner may have provided a showing that one non-signing inventor actually and/or constructively refused to sign the oath or declaration after having been presented with the application papers (specification: description, claims and drawings), the absence of materials referenced made this unclear. The petition was dismissed on 19 September, 2011.

On 11 November, 2011, Petitioner re-advanced the petition and provided the documents previously absent and so evidenced satisfaction of the requirements under the Rule, to wit: (1) petition and fee; (2) proof that the non-signing inventor cannot be reached or refuses to sign the oath or declaration after having been presented with the application papers (specification: description, claims and drawings); (3) an acceptable oath or declaration in compliance with 35 U.S.C. §§ 115 and 116; and (4) a statement of the last known address of the non-signing inventor(s)—with diligence in the effort to ascertain the validity of the address set forth as the reasonably believed to be last known/current/valid address. Petitioner so averred constructive refusal to sign on the part of the non-signing inventor. Thus, Petitioner sought to overcome the prior deficiency(ies) and so doing comply with and complete the requirements—to wit: (1) petition and fee; (2) proof that the non-signing inventor cannot be reached or refuses to sign the oath or declaration after having been presented with the application papers (specification: description, claims and drawings); (3) an acceptable oath or declaration in compliance with 35 U.S.C. §§ 115 and 116; and (4) a statement of the last known address of the non-signing inventor(s)—with diligence in the effort to ascertain the validity of the address set forth as the reasonably believed to be last known/current/valid address. Thus, Petitioner sought to satisfy the requirements pursuant to the Rule and the guidance in the Commentary at MPEP §409.03, and §409.03(a) et seq.), and provide a showing that the non-signing inventor could not be found/refused to sign after diligent effort.

The availability of applications and application papers online to applicants/practitioners who diligently associate their Customer Number with the respective application(s) now provides an applicant/practitioner on-demand information as to events/transactions in an application.

Out of an abundance of caution, Petitioners always are reminded that those registered to practice and all others who make representations before the Office **must** inquire into the underlying facts of representations made to the Office and support averments with the appropriate documentation–since all owe to the Office the continuing duty to disclose.[1]

CONCLUSION

The instant petition under 37 C.F.R. §1.47(a) is **granted** (status is accorded pursuant to 37 C.F.R. §1.47(a).)

As provided in 37 C.F.R. §1.47(c), this Office will forward notice of this application's filing to the non-signing inventors at the addresses given in the petition. Notice of the filing of this application will also be published in the Official Gazette.

The instant application is released to the Office of Patent Application Processing (OPAP) for such processing as required in due course.

Telephone inquiries regarding this decision may be directed to the undersigned at (571) 272-3214—it is noted, however, that all practice before the Office is in writing (see: 37 C.F.R. §1.2[2]) and the proper authority for action on any matter in this regard are the statutes (35 U.S.C.), regulations (37 C.F.R.) and the commentary on policy (MPEP). Therefore, no telephone discussion may be controlling or considered authority for Petitioner's action(s).

/John J. Gillon, Jr./
John J. Gillon, Jr.
Senior Attorney
Office of Petitions

---

[1] See supplement of 17 June, 1999. The Patent and Trademark Office is relying on petitioner's duty of candor and good faith and accepting a statement made by Petitioner. See Changes to Patent Practice and Procedure, 62 Fed. Reg. at 53160 and 53178, 1203 Off. Gaz. Pat. Office at 88 and 103 (responses to comments 64 and 109)(applicant obligated under 37 C.F.R. §11.18, formerly §10.18 to inquire into the underlying facts and circumstances when providing statements to the Patent and Trademark Office).

[2] The regulations at 37 C.F.R. §1.2 provide:

§1.2 Business to be transacted in writing.

All business with the Patent and Trademark Office should be transacted in writing. The personal attendance of applicants or their attorneys or agents at the Patent and Trademark Office is unnecessary. The action of the Patent and Trademark Office will be based exclusively on the written record in the Office. No attention will be paid to any alleged oral promise, stipulation, or understanding in relation to which there is disagreement or doubt

UNITED STATES PATENT AND TRADEMARK OFFICE

Commissioner for Patents
United States Patent and Trademark Office
P.O. Box 1450
Alexandria, VA 22313-1450
www.uspto.gov

STEVE ESSHAKI
1320 MONTROSE ST.
ROYAL OAK, MI 48073

MAILED
JAN 06 2012
OFFICE OF PETITIONS

In re Application of :
Garascia, et al. :
Application No. 13/168,740 :
Filed: 24 June, 2011 :
Attorney Docket No. 069236-1158 069236-1158 :

COMMUNICATION

Dear Steve Esshaki:

You are named as an inventor in the above-identified United States patent application, filed under the provisions of 35 U.S.C. §116 (United States Code), and 37 C.F.R. §1.47 (Code of Federal Regulations), Rules of Practice in Patent Cases. Should a patent be granted on the application you will be designated therein as an inventor.

As a named inventor you are entitled to inspect any paper in the file wrapper of the application, order copies of all or any part thereof (at a prepaid cost per 37 C.F.R. §1.19) or make your position of record in the application. Alternatively, you may arrange to do any of the preceding through a registered patent attorney or agent presenting written authorization from you. If you care to join the application, counsel of record (see below) would presumably assist you. Joining the application would entail the filing of an appropriate oath or declaration by you pursuant to 37 C.F.R. §1.63.

Should you elect to join in the application, the contact information for Counsel of Record is set forth at the end of this Communication.

Should you seek to identify independent Counsel, you may find the Patent Attorneys/Agents Search engine of assistance (https://oedci.uspto.gov/OEDCI/).

Requests for information regarding your application should be directed to the File Information Unit at (703) 308-2733. Information regarding how to pay for and order a copy of the application, or a specific paper in the application, should be directed to the Certification Division at (571) 272-3150 or 1 (800) 972-6382 (outside the Washington, DC area).

Telephone inquiries regarding this communication may be directed to the undersigned at (571) 272-3214—it is noted, however, that all practice before the Office is in writing (see: 37 C.F.R. §1.2[1]) and the proper authority for action on any matter in this regard are the statutes (35 U.S.C.), regulations (37 C.F.R.) and the commentary on policy (MPEP). Therefore, no telephone discussion may be controlling or considered authority for Petitioner's/your action(s) and/or inactions. Moreover, the Office can neither advise you nor recommend Counsel in this matter.

/John J. Gillon, Jr./
John J. Gillon, Jr.
Senior Attorney
Office of Petitions

Counsel of Record:
FOLEY & LARDNER LLP
777 EAST WISCONSIN AVENUE
MILWAUKEE WI 53202-5306

[1] The regulations at 37 C.F.R. §1.2 provide:
§1.2 Business to be transacted in writing.
All business with the Patent and Trademark Office should be transacted in writing. The personal attendance of applicants or their attorneys or agents at the Patent and Trademark Office is unnecessary. The action of the Patent and Trademark Office will be based exclusively on the written record in the Office. No attention will be paid to any alleged oral promise, stipulation, or understanding in relation to which there is disagreement or doubt

UNITED STATES PATENT AND TRADEMARK OFFICE

Commissioner for Patents
United States Patent and Trademark Office
P.O. Box 1450
Alexandria, VA 22313-1450
www.uspto.gov

Medtronic, Inc. (Spinal)
710 Medtronic Parkway
Attn: Legal Patents MS: LC340
Minneapolis MN 55432-5604

MAILED
JUL 29 2011
OFFICE OF PETITIONS

In re Application of	:	
Piza, Young, Liu, and Zhang	:	DECISION REFUSING STATUS
Application No. 13/168,797	:	UNDER 37 CFR 1.47(a)
Filed: 06/24/2011	:	
Attorney Docket No. P0035762.01	:	
Title: COPLANAR DEFORMITY	:	
CORRECTION SYSTEM	:	

This is in response to the petition under 37 CFR 1.47(a) filed June 24, 2011.

The petition under 37 CFR 1.47(a) is **DISMISSED**.

Applicants are given TWO (2) MONTHS from the mailing date of this decision to reply, correcting the below-noted deficiencies. Any reply should be entitled "Request for Reconsideration of Petition Under 37 CFR 1.47(a)," and should address the deficiencies noted below, except that the reply may include an oath or declaration executed by the non-signing inventor. Failure to respond will result in abandonment of the application. Any extensions of time will be governed by 37 CFR 1.136(a).

A grantable petition under 37 CFR 1.47(a) requires: (1) proof that the non-signing inventor cannot be reached or refuses to sign the oath or declaration after having been presented with the application papers (specification, claims and drawings); (2) an acceptable oath or declaration in compliance with 35 U.S.C. §§ 115 and 116; (3) the petition fee; and (4) a statement of the last known address of the non-signing inventor.

Applicants lack items (1) and (2).

Applicants assert that they have been unsuccessful in their attempts to have Dr. Qiu Yong execute the declaration and that they are continuing in their attempts to obtain his signature. Applicants indicated that they made attempts to contact Dr. Young via email on June 21, 2011, and June 24, 2011; however, they did not receive any response.

As to item (1), it is unclear if applicants provided the non-signing inventor, Dr. Yong, with a complete copy of the application papers (specification, including the claims, drawings, if any, and the declaration) for his review and signature on the declaration.

Pursuant to MPEP 409.03(d)(II),

> A refusal by an inventor to sign an oath or declaration when the inventor has not been presented with the application papers does not itself suggest that the inventor is refusing to join the application unless it is clear that the inventor understands exactly what he or she is being asked to sign and refuses to accept the application papers. A copy of the application papers should be sent to the last known address of the nonsigning inventor, or, if the nonsigning inventor is represented by counsel, to the address of the nonsigning inventor's attorney. The fact that an application may contain proprietary information does not relieve the 37 CFR 1.47 applicant of the responsibility to present the application papers to the inventor if the inventor is willing to receive the papers in order to sign the oath or declaration. It is noted that the inventor may obtain a complete copy of the application, unless the inventor has assigned his or her interest in the application, and the assignee has requested that the inventor not be permitted access. See MPEP § 106. It is reasonable to require that the inventor be presented with the application papers before a petition under 37 CFR 1.47 is granted since such a procedure ensures that the inventor is apprised of the application to which the oath or declaration is directed. In re Gray, 115 USPQ 80 (Comm'r Pat. 1956).

Additionally, applicants did not provide sufficient proof that Dr. Yong received the e-mail communications. Applicants did not submit evidence that the non-signing inventor's email address was current and regularly monitored by him. The transmission of documents via email, while a common practice, can be problematic. Transmission and receipt of documents, whether in image, word-processing, spreadsheet or other form, can be affected by differences in software generation between the sender and recipient(s), and other interferences include but are not limited to sender's and recipient's Internet service provider's (ISP) and/or office/personal security firewall systems. Thus, in the absence of some showing, it cannot be presumed, that the non-signing inventor received and opened the documents transmitted to him.

In any renewed petition, applicants must show that the non-signing inventor was presented with the application papers (specification, including the claims, drawings, if any, and the declaration) for the present application. As applicants are aware of the non-signing inventor's last known address, it is suggested that applicants mail a copy of the application papers, return receipt requested, to that address. Applicants may show that a copy of the application was mailed or presented to the non-signing inventor for review by providing a copy of the cover letter transmitting the application papers (specification, including claims, drawings, if any, and the declaration) to the non-signing inventor or details given in an affidavit or declaration of facts by a

person having first-hand knowledge of the events. Applicants must show that they made a bona fide attempt to mail a copy of the application papers to the non-signing inventor at what is believed to be his most current address. If the non-signing inventor refuses to accept delivery of the papers or his conduct constitutes a refusal to join in the application, applicants will have provided proof of refusal to sign the declaration. However, if the application papers are returned as undeliverable, applicants should submit a copy of the envelope, showing that the copy of the application papers sent to the last known address of the non-signing inventor was returned as undeliverable. If further attempts to obtain a forwarding address or to locate non-signing inventor by other means such as use of a national registry or other database fail, then applicants will have provided the necessary proof that the inventor cannot be reached after diligent effort. The results of any search should be provided to the USPTO on renewed petition.

As to item (2), the declaration submitted on June 24, 2011, is unacceptable because the first four pages of the declaration are illegible. A new declaration signed by the signing inventors on behalf of the non-signing inventors is required on renewed petition.

Further correspondence with respect to this matter should be addressed as follows:

By mail: Mail Stop Petition
Commissioner for Patents
P.O. Box 1450
Alexandria, VA 22313-1450

By FAX: (571) 273-8300
Attn: Office of Petitions

By hand: Customer Service Window
Mail Stop Petition
Randolph Building
401 Dulany Street
Alexandria, VA 22314

Correspondence may also be submitted via EFS-Web.

Inquiries related to this decision should be directed to the undersigned at (571) 272-3211.

C. T. Donnell

Christina Tartera Donnell
Senior Petitions Attorney
Office of Petitions

UNITED STATES PATENT AND TRADEMARK OFFICE

Commissioner for Patents
United States Patent and Trademark Office
P.O. Box 1450
Alexandria, VA 22313-1450
www.uspto.gov

Medtronic, Inc. (Spinal)
710 Medtronic Parkway
Attn: Legal Patents MS: LC340
Minneapolis MN 55432-5604

MAILED
JUL 29 2011
OFFICE OF PETITIONS

In re Application of	:	
Piza, Young, Liu, and Zhang	:	DECISION REFUSING STATUS
Application No. 13/168,797	:	UNDER 37 CFR 1.47(a)
Filed: 06/24/2011	:	
Attorney Docket No. P0035762.01	:	
Title: COPLANAR DEFORMITY	:	
CORRECTION SYSTEM	:	

This is in response to the petition under 37 CFR 1.47(a) filed June 24, 2011.

The petition under 37 CFR 1.47(a) is **DISMISSED**.

Applicants are given TWO (2) MONTHS from the mailing date of this decision to reply, correcting the below-noted deficiencies. Any reply should be entitled "Request for Reconsideration of Petition Under 37 CFR 1.47(a)," and should address the deficiencies noted below, except that the reply may include an oath or declaration executed by the non-signing inventor. Failure to respond will result in abandonment of the application. Any extensions of time will be governed by 37 CFR 1.136(a).

A grantable petition under 37 CFR 1.47(a) requires: (1) proof that the non-signing inventor cannot be reached or refuses to sign the oath or declaration after having been presented with the application papers (specification, claims and drawings); (2) an acceptable oath or declaration in compliance with 35 U.S.C. §§ 115 and 116; (3) the petition fee; and (4) a statement of the last known address of the non-signing inventor.

Applicants lack items (1) and (2).

Applicants assert that they have been unsuccessful in their attempts to have Dr. Qiu Yong execute the declaration and that they are continuing in their attempts to obtain his signature. Applicants indicated that they made attempts to contact Dr. Young via email on June 21, 2011, and June 24, 2011; however, they did not receive any response.

As to item (1), it is unclear if applicants provided the non-signing inventor, Dr. Yong, with a complete copy of the application papers (specification, including the claims, drawings, if any, and the declaration) for his review and signature on the declaration.

Pursuant to MPEP 409.03(d)(II),

> A refusal by an inventor to sign an oath or declaration when the inventor has not been presented with the application papers does not itself suggest that the inventor is refusing to join the application unless it is clear that the inventor understands exactly what he or she is being asked to sign and refuses to accept the application papers. A copy of the application papers should be sent to the last known address of the nonsigning inventor, or, if the nonsigning inventor is represented by counsel, to the address of the nonsigning inventor's attorney. The fact that an application may contain proprietary information does not relieve the 37 CFR 1.47 applicant of the responsibility to present the application papers to the inventor if the inventor is willing to receive the papers in order to sign the oath or declaration. It is noted that the inventor may obtain a complete copy of the application, unless the inventor has assigned his or her interest in the application, and the assignee has requested that the inventor not be permitted access. See MPEP § 106. It is reasonable to require that the inventor be presented with the application papers before a petition under 37 CFR 1.47 is granted since such a procedure ensures that the inventor is apprised of the application to which the oath or declaration is directed. In re Gray, 115 USPQ 80 (Comm'r Pat. 1956).

Additionally, applicants did not provide sufficient proof that Dr. Yong received the e-mail communications. Applicants did not submit evidence that the non-signing inventor's email address was current and regularly monitored by him. The transmission of documents via email, while a common practice, can be problematic. Transmission and receipt of documents, whether in image, word-processing, spreadsheet or other form, can be affected by differences in software generation between the sender and recipient(s), and other interferences include but are not limited to sender's and recipient's Internet service provider's (ISP) and/or office/personal security firewall systems. Thus, in the absence of some showing, it cannot be presumed, that the non-signing inventor received and opened the documents transmitted to him.

In any renewed petition, applicants must show that the non-signing inventor was presented with the application papers (specification, including the claims, drawings, if any, and the declaration) for the present application. As applicants are aware of the non-signing inventor's last known address, it is suggested that applicants mail a copy of the application papers, return receipt requested, to that address. Applicants may show that a copy of the application was mailed or presented to the non-signing inventor for review by providing a copy of the cover letter transmitting the application papers (specification, including claims, drawings, if any, and the declaration) to the non-signing inventor or details given in an affidavit or declaration of facts by a

person having first-hand knowledge of the events. Applicants must show that they made a bona fide attempt to mail a copy of the application papers to the non-signing inventor at what is believed to be his most current address. If the non-signing inventor refuses to accept delivery of the papers or his conduct constitutes a refusal to join in the application, applicants will have provided proof of refusal to sign the declaration. However, if the application papers are returned as undeliverable, applicants should submit a copy of the envelope, showing that the copy of the application papers sent to the last known address of the non-signing inventor was returned as undeliverable. If further attempts to obtain a forwarding address or to locate non-signing inventor by other means such as use of a national registry or other database fail, then applicants will have provided the necessary proof that the inventor cannot be reached after diligent effort. The results of any search should be provided to the USPTO on renewed petition.

As to item (2), the declaration submitted on June 24, 2011, is unacceptable because the first four pages of the declaration are illegible. A new declaration signed by the signing inventors on behalf of the non-signing inventors is required on renewed petition.

Further correspondence with respect to this matter should be addressed as follows:

By mail: Mail Stop Petition
Commissioner for Patents
P.O. Box 1450
Alexandria, VA 22313-1450

By FAX: (571) 273-8300
Attn: Office of Petitions

By hand: Customer Service Window
Mail Stop Petition
Randolph Building
401 Dulany Street
Alexandria, VA 22314

Correspondence may also be submitted via EFS-Web.

Inquiries related to this decision should be directed to the undersigned at (571) 272-3211.

C. T. Donnell

Christina Tartera Donnell
Senior Petitions Attorney
Office of Petitions

UNITED STATES PATENT AND TRADEMARK OFFICE

Commissioner for Patents
United States Patent and Trademark Office
P.O. Box 1450
Alexandria, VA 22313-1450
www.uspto.gov

Medtronic, Inc. (Spinal)
710 Medtronic Parkway
Attn: Legal Patents MS: LC340
Minneapolis MN 55432-5604

MAILED
OCT 07 2011
OFFICE OF PETITIONS

In re Application of	:	
Piza, Young, Liu, and Zhang	:	DECISION NOTING JOINDER OF
Application No. 13/168,797	:	INVENTOR AND PETITION UNDER
Filed: 06/24/2011	:	37 CFR 1.47(a) AS MOOT
Attorney Docket No. P0035762.01	:	
Title: COPLANAR DEFORMITY	:	
CORRECTION SYSTEM	:	

This is in response to the renewed petition under 37 CFR 1.47(a) filed September 28, 2011.

In response to the decision dismissing the original petition under 37 CFR 1.47(a), applicants submitted a declaration signed by all of the named inventors in the application. In view of the joinder of the inventors, further consideration under 37 CFR 1.47(a) is not necessary.

Accordingly, the petition is dismissed as involving a moot issue. This application does not have any Rule 1.47(a) status and no such status should appear on the file wrapper. This application does not need to be returned to the Office of Petitions for further consideration under 37 CFR 1.47(a).

This application is being referred to Technology Center Art Unit 3733.

Telephone inquiries related to this decision should be directed to the undersigned at (571) 272-3211.

C. T. Donnell

Christina Tartera Donnell
Senior Petitions Attorney
Office of Petitions

Doc Code: PET.GREEN
Document Description: Petition for Green Tech Pilot

PTO/SB/420 (03-11)

PETITION TO MAKE SPECIAL UNDER THE GREEN TECHNOLOGY PILOT PROGRAM

Attorney Docket Number: BCPS-1001	Application Number (if known):	Filing date: 06/24/2011

First Named Inventor: Steven Richard Easland

Title: SYSTEMS AND METHODS FOR REDUCING ELECTRIC POWER BY OPTIMIZING WATER TURBIDITY, SUSPENDED SOLIDS, CIRCULATION AND FILTRATION IN POOLS, SPAS, WATER FEATURES, AND OTHER CLOSED BODIES OF WATER

APPLICANT HEREBY REQUESTS TO PARTICIPATE IN THE GREEN TECHNOLOGY PILOT PROGRAM FOR THE ABOVE-IDENTIFIED APPLICATION. See Instruction Sheet on page 2.

This petition must be timely filed electronically using the USPTO electronic filing system, EFS-Web.

1. By filing this petition:

   Applicant is requesting early publication: Applicant hereby requests early publication under 37 CFR 1.219 and the publication fee set forth in 37 CFR 1.18(d) accompanies this request.

2. By filing this petition: applicant is agreeing to make an election without traverse in a telephonic interview and elect an invention that meets the eligibility requirements for the Green Technology Pilot Program, if the Office determines that the claims are not obviously directed to a single invention. See Instruction Sheet.

3. This request is accompanied by statements of special status for the eligibility requirement.

4. The application contains no more than three (3) independent claims and twenty (20) total claims.

5. The application does not contain any multiple dependent claims.

6. Other attachments: _____

Signature /Heidi Eisenhut/	Date 06/24/2011
Name (Print/Typed) Heidi Eisenhut	Registration Number 46812

Note: *Signatures of all the inventors or assignees of record of the entire interest or their representative(s) are required in accordance with 37 CFR 1.33 and 11.18. Please see 37 CFR 1.4(d) for the form of the signature. If necessary, submit multiple forms for more than one signature, see below*.*

☐ *Total of _____ forms are submitted.

If you need assistance in completing the form, call 1-800-PTO-9199 and select option 2.

Instruction Sheet for
Petition to Make Special Under the Green Technology Pilot Program

(Not to be Submitted to the USPTO)

The following is a summary of the requirements (for more information see the notices (i) "Pilot Program for Green Technologies Including Greenhouse Gas Reduction," (ii) "Elimination of Classification Requirement in the Green Technology Pilot Program," and (iii) "Expansion and Extension of the Green Technology Pilot Program," available on the USPTO web site at http://www.uspto.gov/patents/init_events/green_tech.jsp):

(1) The application must be a non-reissue, non-provisional utility application filed under 35 U.S.C. 111(a), or an international application that has entered the national stage in compliance with 35 U.S.C. 371, irrespective of the filing date of the application. Reexamination proceedings are excluded from this pilot program.

(2) The application must contain three or fewer independent claims and twenty or fewer total claims. The application must not contain any multiple dependent claims. For an application that contains more than three independent claims or twenty total claims, or multiple dependent claims, applicant must file a preliminary amendment in compliance with 37 CFR 1.121 to cancel the excess claims and/or the multiple dependent claims at the time the petition to make special is filed.

(3) The claims must be directed to a single invention that materially enhances the quality of the environment, or that materially contributes to: (1) the discovery or development of renewable energy resources; (2) the more efficient utilization and conservation of energy resources; or (3) green house gas emission reduction (see the eligibility requirements of sections II and III of the notice (i) cited above). The petition must include a statement that, if the USPTO determines that the claims are directed to multiple inventions (e.g., in a restriction requirement), applicant will agree to make an election without traverse in a telephonic interview, and elect an invention that meets the eligibility requirements in section II or III of the notice (i) cited above.

(4) The petition to make special must be timely filed electronically using the USPTO electronic filing system, EFS-Web, and selecting the document description of "Petition for Green Tech Pilot" on the EFS-Web screen. Applicant should use form PTO/SB/420, which is available as a Portable Document Format (PDF) fillable form in EFS-Web and on the USPTO Web site.

(5) The petition to make special must be filed at least one day prior to the date that a first Office action (which may be an Office action containing only a restriction requirement) appears in the Patent Application Information Retrieval (PAIR) system. Applicant may check the status of the application using PAIR.

(6) The petition to make special must be accompanied by a request for early publication in compliance with 37 CFR 1.219 and the publication fee set forth in 37 CFR 1.18(d).

Privacy Act Statement

The **Privacy Act of 1974 (P.L. 93-579)** requires that you be given certain information in connection with your submission of the attached form related to a patent application or patent. Accordingly, pursuant to the requirements of the Act, please be advised that: (1) the general authority for the collection of this information is 35 U.S.C. 2(b)(2); (2) furnishing of the information solicited is voluntary; and (3) the principal purpose for which the information is used by the U.S. Patent and Trademark Office is to process and/or examine your submission related to a patent application or patent. If you do not furnish the requested information, the U.S. Patent and Trademark Office may not be able to process and/or examine your submission, which may result in termination of proceedings or abandonment of the application or expiration of the patent.

The information provided by you in this form will be subject to the following routine uses:

1. The information on this form will be treated confidentially to the extent allowed under the Freedom of Information Act (5 U.S.C. 552) and the Privacy Act (5 U.S.C 552a). Records from this system of records may be disclosed to the Department of Justice to determine whether disclosure of these records is required by the Freedom of Information Act.
2. A record from this system of records may be disclosed, as a routine use, in the course of presenting evidence to a court, magistrate, or administrative tribunal, including disclosures to opposing counsel in the course of settlement negotiations.
3. A record in this system of records may be disclosed, as a routine use, to a Member of Congress submitting a request involving an individual, to whom the record pertains, when the individual has requested assistance from the Member with respect to the subject matter of the record.
4. A record in this system of records may be disclosed, as a routine use, to a contractor of the Agency having need for the information in order to perform a contract. Recipients of information shall be required to comply with the requirements of the Privacy Act of 1974, as amended, pursuant to 5 U.S.C. 552a(m).
5. A record related to an International Application filed under the Patent Cooperation Treaty in this system of records may be disclosed, as a routine use, to the International Bureau of the World Intellectual Property Organization, pursuant to the Patent Cooperation Treaty.
6. A record in this system of records may be disclosed, as a routine use, to another federal agency for purposes of National Security review (35 U.S.C. 181) and for review pursuant to the Atomic Energy Act (42 U.S.C. 218(c)).
7. A record from this system of records may be disclosed, as a routine use, to the Administrator, General Services, or his/her designee, during an inspection of records conducted by GSA as part of that agency's responsibility to recommend improvements in records management practices and programs, under authority of 44 U.S.C. 2904 and 2906. Such disclosure shall be made in accordance with the GSA regulations governing inspection of records for this purpose, and any other relevant (*i.e.*, GSA or Commerce) directive. Such disclosure shall not be used to make determinations about individuals.
8. A record from this system of records may be disclosed, as a routine use, to the public after either publication of the application pursuant to 35 U.S.C. 122(b) or issuance of a patent pursuant to 35 U.S.C. 151. Further, a record may be disclosed, subject to the limitations of 37 CFR 1.14, as a routine use, to the public if the record was filed in an application which became abandoned or in which the proceedings were terminated and which application is referenced by either a published application, an application open to public inspection or an issued patent.
9. A record from this system of records may be disclosed, as a routine use, to a Federal, State, or local law enforcement agency, if the USPTO becomes aware of a violation or potential violation of law or regulation.

UNITED STATES PATENT AND TRADEMARK OFFICE

UNITED STATES DEPARTMENT OF COMMERCE
United States Patent and Trademark Office
Address: COMMISSIONER FOR PATENTS
P.O. Box 1450
Alexandria, Virginia 22313-1450
www.uspto.gov

APPLICATION NO.	FILING DATE	FIRST NAMED INVENTOR	ATTORNEY DOCKET NO.	CONFIRMATION NO.
13/168,806	06/24/2011	Steven Richard Easland	BCPS-1001	1769

71572 7590 08/22/2011
LOZA & LOZA LLP
305 North Second Ave., #127
Upland, CA 91786-6064

EXAMINER

ART UNIT	PAPER NUMBER
1778	

NOTIFICATION DATE	DELIVERY MODE
08/22/2011	ELECTRONIC

Please find below and/or attached an Office communication concerning this application or proceeding.

The time period for reply, if any, is set in the attached communication.

Notice of the Office communication was sent electronically on above-indicated "Notification Date" to the following e-mail address(es):

docketing@lozaip.com
HEIDI@LOZAIP.COM
heisenhut@gmail.com

UNITED STATES PATENT AND TRADEMARK OFFICE

Commissioner for Patents
United States Patent and Trademark Office
P.O. Box 1450
Alexandria, VA 22313-1450
www.uspto.gov

LOZA & LOZA LLP
305 North Second Ave., #127
Upland CA 91786-6064

AUG 2 2 2011

In re Application of	:	
Steven R. Easland et al.	:	DECISION ON PETITION
Application No. 13/168,806	:	TO MAKE SPECIAL UNDER
Filed: June 24, 2011	:	THE GREEN TECHNOLOGY
Attorney Docket No. BCPS-1001	:	PILOT PROGRAM

This is a decision on the petition under 37 CFR 1.102, filed June 24, 2011, to make the above-identified application special under the pilot program for applications pertaining to Green Technologies as set forth in 74 Federal Register Notice 64666 (December 8, 2009) and amended by 75 Federal Register Notice 28554 (May 21, 2010) and 75 Federal Register Notice 69049 (November 10, 2010).

The petition is **GRANTED**.

A grantable petition to make an application special under 37 CFR 1.102 and the pilot program as set forth in 74 FR 64666 must be directed to a nonprovisional application filed under 35 USC 111(a) or be a national stage entry under 35 USC 371, exclusive of any reissue applications.

In order to qualify for special status, the following requirements must be met. 1) The application must have no more than 3 independent claims and no more than 20 total claims. 2) The application must not contain any multiple dependent claims. 3) The petition must state the basis for seeking special status, i.e., the claimed invention either: A) materially enhances the quality of the environment or B) materially contributes to: i) the discovery or development of renewable energy resources, ii) the more efficient utilization and conservation of energy resources, or iii) greenhouse gas emission reduction. 4) If the disclosure is not clear on its face that the claimed invention materially contributes under category (A) or (B), the petition must be accompanied by a statement by the applicant, assignee, or an attorney/agent registered to practice before the Office explaining how the materiality standard is met. 5) A statement that applicant will agree to make an election without traverse in a telephonic interview if a restriction requirement is made by the examiner. 6) The petition to make special must be filed electronically. 7) The petition must be filed at least one day prior to the date that a first Office Action appears in the Patent Application Information Retrieval (PAIR) system. 8) The petition must be accompanied by a request for early publication in compliance with 37 CFR 1.219 and include the publication fee as set forth in 37 CFR 1.18(d).

The requirement for a fee for consideration of the petition to make special for applications pertaining to Green Technologies has been waived.

The instant petition complies with items 1 – 8 above. Accordingly, the above-identified application has been accorded "special" status.

Telephone inquires concerning this decision should be directed to Blaine Copenheaver at 571-272-1156.

The application is being forwarded to the examiner for action on the merits commensurate with this decision.

/Blaine Copenheaver/

Blaine Copenheaver
Quality Assurance Specialist
Technology Center 1700

Doc Code: PET.GREEN
Document Description: Petition for Green Tech Pilot

PTO/SB/420 (11-10)
Approved for use through 01/31/2011. OMB 0651-0062
U.S. Patent and Trademark Office; U.S. DEPARTMENT OF COMMERCE
Under the Paperwork Reduction Act of 1995, no persons are required to respond to a collection of information unless it displays a valid OMB control number.

PETITION TO MAKE SPECIAL UNDER THE GREEN TECHNOLOGY PILOT PROGRAM

Attorney Docket Number:	695458101US2	Application Number (if known):	Not Yet Assigned	Filing date: Concurrently Herewith	
First Named Inventor:	Roy E. McAlister, P.E.				
Title:	ELECTROLYTIC CELL AND METHOD OF USE THEREOF				

APPLICANT HEREBY REQUESTS TO PARTICIPATE IN THE GREEN TECHNOLOGY PILOT PROGRAM FOR THE ABOVE-IDENTIFIED APPLICATION. See Instruction Sheet on page 2.

This petition must be timely filed electronically using the USPTO electronic filing system, EFS-Web.

1. By filing this petition:

   Applicant is requesting early publication: Applicant hereby requests early publication under 37 CFR 1.219 and the publication fee set forth in 37 CFR 1.18(d) accompanies this request.

2. By filing this petition: applicant is agreeing to make an election without traverse in a telephonic interview and elect an invention that meets the eligibility requirements for the Green Technology Pilot Program, if the Office determines that the claims are not obviously directed to a single invention. See Instruction Sheet.

3. This request is accompanied by statements of special status for the eligibility requirement.

4. The application contains no more than three (3) independent claims and twenty (20) total claims.

5. The application does not contain any multiple dependent claims.

6. Other attachments: Statement in Support of Petition

Signature		Date	6.24.11
Name (Print/Typed)	Susan D. Betcher	Registration Number	43,498

***Note**: Signatures of all the inventors or assignees of record of the entire interest or their representative(s) are required in accordance with 37 CFR 1.33 and 11.18. Please see 37 CFR 1.4(d) for the form of the signature. If necessary, submit multiple forms if more than one signature, see below*.*

☐ *Total of 1 forms are submitted.

Docket No.: 695458101US2
(PATENT)

IN THE UNITED STATES PATENT AND TRADEMARK OFFICE

In re Patent Application of:
Roy E. McAlister, P.E.

Application No.: Not Yet Assigned

Confirmation No.: N/A

Filed: Concurrently Herewith

Art Unit: N/A

For: ELECTROLYTIC CELL AND METHOD OF USE THEREOF

Examiner: Not Yet Assigned

STATEMENT OF SPECIAL STATUS IN SUPPORT OF PETITION

Commissioner for Patents
P.O. Box 1450
Alexandria, VA 22313-1450

Sir:

This paper is filed in support of the Petition to Make Special under the Green Technology Pilot Program filed concurrently herewith.

Petitioner hereby states that the referenced application is directed to a single invention that materially enhances the quality of the environment, or that materially contributes to: (1) the discovery or development of renewable energy resources; (2) the more efficient utilization and conservation of energy resources; or (3) green house gas emission reduction.

More specifically, the specification and claims include disclosure directed to:

> Electrolyzer provides current at sufficient voltage to produce hydrogen from such compounds and acids and may provide operation as a digester and an electrolyzer, or may be operated within an anaerobic digester or may utilize liquors produced by anaerobic digestion as shown. Such operation is particularly useful for converting organic wastes from a community and or

industrial park for purposes of supplying the community with fuel and feed stocks for manufacturing carbon enhanced durable goods. (Specification ¶ 0098)

Accordingly, this disclosure materially contributes to the discovery and development of renewable energy resources.

In light of the above, it is requested that the Petition to Make Special under the Green Technology Pilot Program be granted.

Applicant believes no fee is due with this response. However, if a fee is due, please charge our Deposit Account No. 50-0665, under Order No. 695458101US2 from which the undersigned is authorized to draw.

Dated: 6.24.11

Respectfully submitted,

By_____

Susan D. Betcher
Registration No.: 43,498
PERKINS COIE LLP
P.O. Box 1247
Seattle, Washington 98111-1247
(206) 359-8000
(206) 359-7198 (Fax)
Attorney for Applicant

UNITED STATES PATENT AND TRADEMARK OFFICE

UNITED STATES DEPARTMENT OF COMMERCE
United States Patent and Trademark Office
Address: COMMISSIONER FOR PATENTS
P.O. Box 1450
Alexandria, Virginia 22313-1450
www.uspto.gov

APPLICATION NO.	FILING DATE	FIRST NAMED INVENTOR	ATTORNEY DOCKET NO.	CONFIRMATION NO.
13/168,817	06/24/2011	Roy E. McAlister	695458101US2	1787

25096 7590 08/22/2011
PERKINS COIE LLP
PATENT-SEA
P.O. BOX 1247
SEATTLE, WA 98111-1247

EXAMINER

ART UNIT	PAPER NUMBER
1723	

NOTIFICATION DATE	DELIVERY MODE
08/22/2011	ELECTRONIC

Please find below and/or attached an Office communication concerning this application or proceeding.

The time period for reply, if any, is set in the attached communication.

Notice of the Office communication was sent electronically on above-indicated "Notification Date" to the following e-mail address(es):

patentprocurement@perkinscoie.com

UNITED STATES PATENT AND TRADEMARK OFFICE

Commissioner for Patents
United States Patent and Trademark Office
P.O. Box 1450
Alexandria, VA 22313-1450
www.uspto.gov

PERKINS COIE LLP
PATENT-SEA
P.O. BOX 1247
SEATTLE WA 98111-1247

AUG 2 2 2011

In re Application of	:	
Roy E. McAlister	:	DECISION ON PETITION
Application No. 13/168,817	:	TO MAKE SPECIAL UNDER
Filed: June 24, 2011	:	THE GREEN TECHNOLOGY
Attorney Docket No. 695458101US2	:	PILOT PROGRAM

This is a decision on the petition under 37 CFR 1.102, filed June 24, 2011, to make the above-identified application special under the pilot program for applications pertaining to Green Technologies as set forth in 74 Federal Register Notice 64666 (December 8, 2009) and amended by 75 Federal Register Notice 28554 (May 21, 2010) and 75 Federal Register Notice 69049 (November 10, 2010).

The petition is **GRANTED**.

A grantable petition to make an application special under 37 CFR 1.102 and the pilot program as set forth in 74 FR 64666 must be directed to a nonprovisional application filed under 35 USC 111(a) or be a national stage entry under 35 USC 371, exclusive of any reissue applications.

In order to qualify for special status, the following requirements must be met. 1) The application must have no more than 3 independent claims and no more than 20 total claims. 2) The application must not contain any multiple dependent claims. 3) The petition must state the basis for seeking special status, i.e., the claimed invention either: A) materially enhances the quality of the environment or B) materially contributes to: i) the discovery or development of renewable energy resources, ii) the more efficient utilization and conservation of energy resources, or iii) greenhouse gas emission reduction. 4) If the disclosure is not clear on its face that the claimed invention materially contributes under category (A) or (B), the petition must be accompanied by a statement by the applicant, assignee, or an attorney/agent registered to practice before the Office explaining how the materiality standard is met. 5) A statement that applicant will agree to make an election without traverse in a telephonic interview if a restriction requirement is made by the examiner. 6) The petition to make special must be filed electronically. 7) The petition must be filed at least one day prior to the date that a first Office Action appears in the Patent Application Information Retrieval (PAIR) system. 8) The petition must be accompanied by a request for early publication in compliance with 37 CFR 1.219 and include the publication fee as set forth in 37 CFR 1.18(d).

The requirement for a fee for consideration of the petition to make special for applications pertaining to Green Technologies has been waived.

The instant petition complies with items 1 – 8 above. Accordingly, the above-identified application has been accorded "special" status.

Telephone inquires concerning this decision should be directed to Blaine Copenheaver at 571-272-1156.

The application is being forwarded to the examiner for action on the merits commensurate with this decision.

/Blaine Copenheaver/

Blaine Copenheaver
Quality Assurance Specialist
Technology Center 1700

UNITED STATES PATENT AND TRADEMARK OFFICE

UNITED STATES DEPARTMENT OF COMMERCE
United States Patent and Trademark Office
Address: COMMISSIONER FOR PATENTS
P.O. Box 1450
Alexandria, Virginia 22313-1450
www.uspto.gov

APPLICATION NO.	FILING DATE	FIRST NAMED INVENTOR	ATTORNEY DOCKET NO.	CONFIRMATION NO.
13/168,856	06/24/2011	Richard N. Dalby	17469-8001.US00	1859

79975 7590 08/09/2011
King & Spalding LLP
P.O. Box 889
Belmont, CA 94002-0889

EXAMINER
LEE, WILLIAM Y

ART UNIT	PAPER NUMBER
1629	

MAIL DATE	DELIVERY MODE
08/09/2011	PAPER

Please find below and/or attached an Office communication concerning this application or proceeding.

The time period for reply, if any, is set in the attached communication.

UNITED STATES PATENT AND TRADEMARK OFFICE

Commissioner for Patents
United States Patent and Trademark Office
P.O. Box 1450
Alexandria, VA 22313-1450
www.uspto.gov

AUG 0 9 2011

King & Spalding LLP
P.O. Box 889
Belmont CA 94002-0889

In re Application of:
Dalby et al.

Serial No.: 13/168,856

Filed: : June 24, 2011

Docket: **17469-8001.US00**

DECISION ON PETITION TO MAKE SPECIAL FOR NEW APPLICATION UNDER 37 C.F.R. § 1.102 & M.P.E.P. § 708.02

Title: **TACROLIMUS COMPOSITIONS FOR AEROSOL ADMINISTRATION**

This is a decision on the petition June 24, 2011, to make the above-identified application special for accelerated examination procedure under 37 C.F.R. § 1.102(d).

The petition to make the application special is GRANTED.

The application is eligible for accelerated examination and the petition complies with the conditions for granting the application special status pursuant to the "Change to Practice for Petitions in Patent Applications to Make Special and for Accelerated Examination" published June 26, 2006, in the Federal Register. (71 Fed. Reg. 36323).

The prosecution of the instant application will be conducted expeditiously according to the following guidelines.

1. The application will be docketed to an examiner and taken up for action within two weeks of the date of this decision.

2. Restriction Practice:
   If the examiner determines that the claims are not directed to a single invention, a telephone request to elect one single invention will be made pursuant to MPEP 812.01. As a prerequisite to the grant of this petition, the applicant has agreed to make an oral election, by telephone, without traverse. If the applicant refuses to make an election

without traverse, or the examiner cannot reach the applicant after a reasonable effort, the examiner will treat the first claimed invention (invention defined by claim 1) as having being constructively elected without traverse for examination.

3. Office action:
   If it is determined that, after appropriate consultation, there is a potential rejection or any other issue to be addressed, the examiner will telephone the applicant and arrange an interview to discuss and resolve the issue. An Office action, other than a Notice of Allowance and Fee(s) Due (Notice of Allowance), will not be issued unless either: 1) an interview was conducted but did not result in agreed to action that places the application in condition for allowance, or, 2) a determination is made that an interview would be unlikely to result in the application being placed in condition for allowance, and 3) an internal conference has been held to review any rejection of any claim.

4. Time for Reply:
   An Office action other than a Notice of Allowance or a final Office action will set a shortened statutory period of one month or thirty days, whichever is longer, for reply with no extension of time available under 37 CFR 1.136(a). Failure to timely file a reply within this non-extendible period for reply will result in the abandonment of the application.

5. Reply by Applicant:
   A timely reply to an Office action other than the Notice of Allowance must be submitted electronically via EFS or EFS-web and limited to addressing the rejections, objections and requirement made. Any amendment that attempts to: 1) add claims which would result in more than three pending independent claims or more than twenty pending total claims; 2) present claims not encompassed by the pre-examination search or an updated accelerated examination support document; or 3) present claims that are directed a non-elected invention or an invention other than that previously claimed and examined in the application, will be treated as not fully responsive and will not be entered.

   For any amendment to the claims (including any new claim) that is not encompassed by the accelerated examination support document, applicant must provide an updated accelerated examination support document that encompasses the amended or new claims at the time of filing of the amendment.

   To proceed expeditiously with the examination, it is recommended that a reply with amendments made to any claim or with any new claim being added be accompanied by an updated accelerated examination support document or a statement explaining how the amended or new claim is supported by the original accelerated examination support document.

6. Information Disclosure Statement (IDS):

7. Any IDS filed during prosecution must be submitted electronically via EFS or EFS-web, accompanied by an updated accelerated examination support document, and be in compliance with 37 CFR 1.97 and 1.98.

8. Post-Allowance Processing:
   To expedite processing of the allowed application into a patent, the applicant must: 1) pay the required fees within one month of the date of the Notice of Allowance, and 2) not file any post allowance papers not required by the Office. In no event may the issue fee be paid and accepted later than three months from the date of the Notice of Allowance.

9. After-Final and Appeal Procedures:
   To expedite prosecution, after receiving the final Office action, applicant must: 1) promptly file a notice of appeal, an appeal brief and appeal fees; and 2) not request a pre-appeal brief conference.

   Any amendment, affidavit or other evidence filed after final Office action must comply with applicable rules and the requirements outlined in numbered paragraphs 5 and 6 above.

   On appeal, the application will proceed according to normal appeal procedures. After appeal, the application will again be treated special.

10. Proceedings Outside the Normal Examination Process:
    If the application becomes involved in a proceeding that is outside the normal examination process (e.g., a secrecy order, national security review, interference proceeding, petitions under 37 CFR 1.181, 182 or 183), the application will be treated special before and after such proceeding.

11. Final Disposition:
    The twelve month goal of this accelerated examination procedure ends with a final disposition. The mailing of a final Office action, a Notice of Allowance, the filing of a Notice of Appeal, or the filing of a Request for Continued Examination (RCE) is the final disposition.

If, during prosecution, a paper is not filed electronically using EFS-web, a reply is filed but is not fully responsive, the application is involved in an appeal, or a proceeding outside normal examination process, the application will still be examined expeditiously, however, the final disposition may occur more than twelve months from the filing of the application.

Any inquiry regarding this decision should be directed to Marianne C. Seidel, Quality Assurance Specialist, at (571) 272-0584.

/MC Seidel/
Marianne C. Seidel, Quality Assurance Specialist
Technology Center 1600

UNITED STATES PATENT AND TRADEMARK OFFICE

UNITED STATES DEPARTMENT OF COMMERCE
United States Patent and Trademark Office
Address: COMMISSIONER FOR PATENTS
P.O. Box 1450
Alexandria, Virginia 22313-1450
www.uspto.gov

APPLICATION NO.	FILING DATE	FIRST NAMED INVENTOR	ATTORNEY DOCKET NO.	CONFIRMATION NO.
13/168,856	06/24/2011	Richard N. Dalby	17469-8001.US00	1859

79975 7590 08/10/2011
King & Spalding LLP
P.O. Box 889
Belmont, CA 94002-0889

EXAMINER
LEE, WILLIAM Y

ART UNIT	PAPER NUMBER
1629	

MAIL DATE	DELIVERY MODE
08/10/2011	PAPER

Please find below and/or attached an Office communication concerning this application or proceeding.

The time period for reply, if any, is set in the attached communication.

UNITED STATES PATENT AND TRADEMARK OFFICE

Commissioner for Patents
United States Patent and Trademark Office
P.O. Box 1450
Alexandria, VA 22313-1450
www.uspto.gov

AUG 1 0 2011

King & Spalding LLP
P.O. Box 889
Belmont CA 94002-0889

In re Application of:
Dalby et al.

Serial No.: 13/168,856

Filed: : June 24, 2011

Docket: **17469-8001.US00**

DECISION ON PETITION TO MAKE SPECIAL FOR NEW APPLICATION UNDER 37 C.F.R. § 1.102 & M.P.E.P. § 708.02

Title: **TACROLIMUS COMPOSITIONS FOR AEROSOL ADMINISTRATION**

This is a decision on the petition filed June 24, 2011, to make the above-identified application special for accelerated examination procedure under 37 C.F.R. § 1.102(d).

The petition to make the application special is GRANTED.

The application is eligible for accelerated examination and the petition complies with the conditions for granting the application special status pursuant to the "Change to Practice for Petitions in Patent Applications to Make Special and for Accelerated Examination" published June 26, 2006, in the Federal Register. (71 Fed. Reg. 36323).

The prosecution of the instant application will be conducted expeditiously according to the following guidelines.

1. The application will be docketed to an examiner and taken up for action within two weeks of the date of this decision.

2. Restriction Practice:
   If the examiner determines that the claims are not directed to a single invention, a telephone request to elect one single invention will be made pursuant to MPEP 812.01. As a prerequisite to the grant of this petition, the applicant has agreed to make an oral election, by telephone, without traverse. If the applicant refuses to make an election without traverse, or the examiner cannot reach the applicant after a reasonable effort, the

examiner will treat the first claimed invention (invention defined by claim 1) as having being constructively elected without traverse for examination.

3. Office action:
   If it is determined that, after appropriate consultation, there is a potential rejection or any other issue to be addressed, the examiner will telephone the applicant and arrange an interview to discuss and resolve the issue. An Office action, other than a Notice of Allowance and Fee(s) Due (Notice of Allowance), will not be issued unless either: 1) an interview was conducted but did not result in agreed to action that places the application in condition for allowance, or, 2) a determination is made that an interview would be unlikely to result in the application being placed in condition for allowance, and 3) an internal conference has been held to review any rejection of any claim.

4. Time for Reply:
   An Office action other than a Notice of Allowance or a final Office action will set a shortened statutory period of one month or thirty days, whichever is longer, for reply with no extension of time available under 37 CFR 1.136(a). Failure to timely file a reply within this non-extendible period for reply will result in the abandonment of the application.

5. Reply by Applicant:
   A timely reply to an Office action other than the Notice of Allowance must be submitted electronically via EFS or EFS-web and limited to addressing the rejections, objections and requirement made. Any amendment that attempts to: 1) add claims which would result in more than three pending independent claims or more than twenty pending total claims; 2) present claims not encompassed by the pre-examination search or an updated accelerated examination support document; or 3) present claims that are directed a non-elected invention or an invention other than that previously claimed and examined in the application, will be treated as not fully responsive and will not be entered.

   For any amendment to the claims (including any new claim) that is not encompassed by the accelerated examination support document, applicant must provide an updated accelerated examination support document that encompasses the amended or new claims at the time of filing of the amendment.

   To proceed expeditiously with the examination, it is recommended that a reply with amendments made to any claim or with any new claim being added be accompanied by an updated accelerated examination support document or a statement explaining how the amended or new claim is supported by the original accelerated examination support document.
6. Information Disclosure Statement (IDS):
7. Any IDS filed during prosecution must be submitted electronically via EFS or EFS-web, accompanied by an updated accelerated examination support document, and be in compliance with 37 CFR 1.97 and 1.98.

8. Post-Allowance Processing:
   To expedite processing of the allowed application into a patent, the applicant must: 1) pay the required fees within one month of the date of the Notice of Allowance, and 2) not file any post allowance papers not required by the Office. In no event may the issue fee be paid and accepted later than three months from the date of the Notice of Allowance.

9. After-Final and Appeal Procedures:
   To expedite prosecution, after receiving the final Office action, applicant must: 1) promptly file a notice of appeal, an appeal brief and appeal fees; and 2) not request a pre-appeal brief conference.

   Any amendment, affidavit or other evidence filed after final Office action must comply with applicable rules and the requirements outlined in numbered paragraphs 5 and 6 above.

   On appeal, the application will proceed according to normal appeal procedures. After appeal, the application will again be treated special.

10. Proceedings Outside the Normal Examination Process:
    If the application becomes involved in a proceeding that is outside the normal examination process (e.g., a secrecy order, national security review, interference proceeding, petitions under 37 CFR 1.181, 182 or 183), the application will be treated special before and after such proceeding.

11. Final Disposition:
    The twelve month goal of this accelerated examination procedure ends with a final disposition. The mailing of a final Office action, a Notice of Allowance, the filing of a Notice of Appeal, or the filing of a Request for Continued Examination (RCE) is the final disposition.

If, during prosecution, a paper is not filed electronically using EFS-web, a reply is filed but is not fully responsive, the application is involved in an appeal, or a proceeding outside normal examination process, the application will still be examined expeditiously, however, the final disposition may occur more than twelve months from the filing of the application.

Any inquiry regarding this decision should be directed to Marianne C. Seidel, Quality Assurance Specialist, at (571) 272-0584.

/MC Seidel/
Marianne C. Seidel, Quality Assurance Specialist
Technology Center 1600

Doc Code: PET.GREEN
Document Description: Petition for Green Tech Pilot

PTO/SB/420 (03-11)

PETITION TO MAKE SPECIAL UNDER THE GREEN TECHNOLOGY PILOT PROGRAM

Attorney Docket Number: WAI-031A	Application Number (if known):	Filing date:

First Named Inventor: Reynolds, Paul

Title: DIRECTLY-ACTUATED PIEZOELECTRIC FUEL INJECTOR WITH VARIABLE FLOW CONTROL

APPLICANT HEREBY REQUESTS TO PARTICIPATE IN THE GREEN TECHNOLOGY PILOT PROGRAM FOR THE ABOVE-IDENTIFIED APPLICATION. See Instruction Sheet on page 2.

This petition must be timely filed electronically using the USPTO electronic filing system, EFS-Web.

1. By filing this petition:

   Applicant is requesting early publication: Applicant hereby requests early publication under 37 CFR 1.219 and the publication fee set forth in 37 CFR 1.18(d) accompanies this request.

2. By filing this petition: applicant is agreeing to make an election without traverse in a telephonic interview and elect an invention that meets the eligibility requirements for the Green Technology Pilot Program, if the Office determines that the claims are not obviously directed to a single invention. See Instruction Sheet.

3. This request is accompanied by statements of special status for the eligibility requirement.

4. The application contains no more than three (3) independent claims and twenty (20) total claims.

5. The application does not contain any multiple dependent claims.

6. Other attachments: WAI031A_20110624_Petition_Green_Technology_FINAL2_EFSformat.pdf

Signature /kennethamurrayjr45603/	Date June 24, 2011
Name (Print/Typed) Kenneth A. Murray, Jr.	Registration Number 45603

Note: *Signatures of all the inventors or assignees of record of the entire interest or their representative(s) are required in accordance with 37 CFR 1.33 and 11.18. Please see 37 CFR 1.4(d) for the form of the signature. If necessary, submit multiple forms for more than one signature, see below*.*

☒ *Total of 1 forms are submitted.

If you need assistance in completing the form, call 1-800-PTO-9199 and select option 2.

IN THE UNITED STATES PATENT AND TRADEMARK OFFICE

First Named Inventor	:	Paul Reynolds
Serial No.	:	
Filed	:	
Art Unit	:	
Confirmation Number	:	
Examiner	:	
Title	:	DIRECTLY-ACTUATED PIEZOELECTRIC FUEL INJECTOR WITH VARIABLE FLOW CONTROL
Attorney Docket No.	:	WAI-031A

June 24, 2011

MAIL STOP - PETITIONS

Commissioner for Patents

PO BOX 1450

Alexandria VA 22313-1450

PETITION TO MAKE SPECIAL UNDER THE GREEN TECHNOLOGY PILOT PROGRAM

Dear Sir:

Pursuant to 37 Code of Federal Regulations (C.F.R.) §1.102(d), Applicant hereby petitions the Commissioner of Patents and Trademarks to make the subject patent application special under the Green Technology Pilot Program so that it may be taken out of turn for immediate action. It is submitted that the above application complies with requirements to qualify for special status.

The subject application meets the eligibility requirements and conditions as set forth in the notice set out in Federal Register, Vol. 74, No. 234, and modified at 75 Fed. Reg. 69049 and 75 Fed. Reg. 28554, namely:

I. Requirements:

a. The subject application is a non-reissue, non-provisional utility application filed under 35 U.S.C. 111(a) and filed prior to the date of the notice, December 31, 2011.

b. The subject application contains no more than 3 independent claims and no more than 20 total claims;

c. The subject application contains no multiple dependent claims;

d. The basis for the special status is that the invention materially contributes to (1) the more efficient utilization and conservation of energy resources and (2) greenhouse gas emission reduction. The claims are directed to a single invention and describe a novel fuel injector apparatus containing a piezoelectric driving stack and a modified flow nozzle assembly and providing the ability for greater engine fuel efficiency over prior injection systems;

e. The subject application is directed toward an invention that is used to actively inject fuel into an internal-combustion engine by directly forcing the fuel into the combustion chamber at an appropriate point in the combustion cycle. In the improved fuel injector described in the submitted application, the nozzle portion of the apparatus can be driven directly by the piezoelectric stack without additional amplification means while the flow area of the nozzle portion is variably adjustable to deliver controlled flow rates in a desired flow profile. The result of these novel features is a fuel injector that allows precise control of the fuel flow profile in the system during each combustion cycle, in turn greatly improving efficiency, power, and emission control. This improved injector technology will provide opportunities for substantial improvement in many types of combustion engine designs. The innovative design can be scaled down and up in size to accommodate varied injection requirements. Standard diesel and jet engines stand to benefit greatly from the reduced emissions and greater fuel efficiency of the injector technology.

f. If the USPTO determines that the claims are directed to multiple inventions (e.g. in a restriction requirement), the applicant agrees to make an election without traverse

in a telephonic interview and elect an invention the meets the eligibility requirements as set out in the above stated notice;

g. This petition has been filed electronically;

h. This petition has been filed at least one day prior to the date that a first Office Action appears in the PAIR system; and

i. This petition is accompanied by a request for early publication in compliance with 37 CFR 1.219 and the associated publication fee.

It is understood that a fee is needed with this petition and such is included with this petition.

Applicants respectfully request that this Petition be granted. Should the Examiner have any questions, the Examiner is encouraged and cordially invited to contact Applicant's attorney, Kenneth A. Murray, Jr., at (530) 574-5357.

Respectfully submitted,

/kennethamurrayjr45603/

Kenneth A. Murray, Jr.
Reg. No. 45,603
Customer No. 59,273

UNITED STATES PATENT AND TRADEMARK OFFICE

UNITED STATES DEPARTMENT OF COMMERCE
United States Patent and Trademark Office
Address: COMMISSIONER FOR PATENTS
P.O. Box 1450
Alexandria, Virginia 22313-1450
www.uspto.gov

APPLICATION NO.	FILING DATE	FIRST NAMED INVENTOR	ATTORNEY DOCKET NO.	CONFIRMATION NO.
13/168,876	06/24/2011	Paul Reynolds	WAI-031A	1897

59273 7590 09/28/2011
LAW OFFICE OF KENNETH A. MURRAY, JR.
P.O. BOX 2188
DAVIS, CA 95617

EXAMINER

ART UNIT	PAPER NUMBER
3752	

MAIL DATE	DELIVERY MODE
09/28/2011	PAPER

Please find below and/or attached an Office communication concerning this application or proceeding.

The time period for reply, if any, is set in the attached communication.

UNITED STATES PATENT AND TRADEMARK OFFICE

Commissioner for Patents
United States Patent and Trademark Office
P.O. Box 1450
Alexandria, VA 22313-1450
www.uspto.gov

LAW OFFICE OF KENNETH A. MURRAY, JR.
P.O. BOX 2188
DAVIS CA 95617

In re Application of	:	
REYNOLDS, PAUL . et al	:	DECISION ON PETITION
Application No. 13/168,876	:	TO MAKE SPECIAL UNDER
Filed: June 24, 2011	:	THE GREEN TECHNOLOGY
Attorney Docket No. WAI-031A	:	PILOT PROGRAM

This is a decision on the renewed petition under 37 CFR 1.102, filed June 24, 2011 to make the above-identified application special under the pilot program for applications pertaining to Green Technologies as set forth in 74 Federal Register Notice 64666 (December 8, 2009) and amended by 75 Federal Register Notice 28554 (May 21, 2010) and 75 Federal Register Notice 69049 (November 10, 2010).

The petition is **granted.**

A grantable petition to make an application special under 37 CFR 1.102 and the pilot program as set forth in 74 FR 64666 must be directed to a nonprovisional application filed under 35 USC 111(a) or be a national stage entry under 35 USC 371, exclusive of any reissue applications.

In order to qualify for special status, the following requirements must be met. 1) The application must have no more than 3 independent claims and no more than 20 total claims. 2) The application must not contain any multiple dependent claims. 3) The petition must state the basis for seeking special status, i.e., the claimed invention either: A) materially enhances the quality of the environment or B) materially contributes to: i) the discovery or development of renewable energy resources, ii) the more efficient utilization and conservation of energy resources, or iii) greenhouse gas emission reduction. 4) If the disclosure is not clear on its face that the claimed invention materially contributes under category (A) or (B), the petition must be accompanied by a statement by the applicant, assignee, or an attorney/agent registered to practice before the Office explaining how the materiality standard is met. 5) A statement that applicant will agree to make an election without traverse in a telephonic interview if a restriction requirement is made by the examiner. 6) The petition to make special must be filed electronically. 7) The petition must be filed at least one day prior to the date that a first Office Action appears in the Patent Application Information Retrieval (PAIR) system. 8) The petition must be accompanied by a request for early publication in compliance with 37 CFR 1.219 and include the publication fee as set forth in 37 CFR 1.18(d).

The requirement for a fee for consideration of the petition to make special for applications pertaining to Green Technologies has been waived.

The instant petition complies with items 1 – 8 above. Accordingly, the above-identified application has been accorded "special" status.

Telephone inquires concerning this decision should be directed to Henry C. Yuen at 571-272-4856.

This application will be forwarded to the Technology Center Art Unit 3752 for action on the merits commensurate with this decision.

/Henry C. Yuen/

Henry C. Yuen
Quality Assurance Specialist
Technology Center TC 3700

Doc Code: PET.GREEN
Document Description: Petition for Green Tech Pilot

PTO/SB/420 (03-11)

PETITION TO MAKE SPECIAL UNDER THE GREEN TECHNOLOGY PILOT PROGRAM

Attorney Docket Number: 900RO-005400US	Application Number (if known): Unassigned	Filing date: Unassigned

First Named Inventor: Ramachandran NARAYANAMURTHY

Title: THERMOSTAT METHOD AND SYSTEM FOR CONTROLLING SOLAR ENERGY UTILIZATION FOR EFFICIENT ENERGY USAGE AND CONSERVATION OF ENERGY RESOURCES

APPLICANT HEREBY REQUESTS TO PARTICIPATE IN THE GREEN TECHNOLOGY PILOT PROGRAM FOR THE ABOVE-IDENTIFIED APPLICATION. See Instruction Sheet on page 2.

This petition must be timely filed electronically using the USPTO electronic filing system, EFS-Web.

1. By filing this petition:

   Applicant is requesting early publication: Applicant hereby requests early publication under 37 CFR 1.219 and the publication fee set forth in 37 CFR 1.18(d) accompanies this request.

2. By filing this petition: applicant is agreeing to make an election without traverse in a telephonic interview and elect an invention that meets the eligibility requirements for the Green Technology Pilot Program, if the Office determines that the claims are not obviously directed to a single invention. See Instruction Sheet.

3. This request is accompanied by statements of special status for the eligibility requirement.

4. The application contains no more than three (3) independent claims and twenty (20) total claims.

5. The application does not contain any multiple dependent claims.

6. Other attachments: (1) Statement in Support of Green Tech. Petition

Signature /Steve Y. Cho/	Date June 24, 2011
Name (Print/Typed) Steve Y. Cho for Richard T. Ogawa	Registration Number 44612 / 37,692

Note: *Signatures of all the inventors or assignees of record of the entire interest or their representative(s) are required in accordance with 37 CFR 1.33 and 11.18. Please see 37 CFR 1.4(d) for the form of the signature. If necessary, submit multiple forms for more than one signature, see below*.*

*Total of 2 forms are submitted.

If you need assistance in completing the form, call 1-800-PTO-9199 and select option 2.

UNITED STATES PATENT AND TRADEMARK OFFICE

UNITED STATES DEPARTMENT OF COMMERCE
United States Patent and Trademark Office
Address: COMMISSIONER FOR PATENTS
P.O. Box 1450
Alexandria, Virginia 22313-1450
www.uspto.gov

APPLICATION NO.	FILING DATE	FIRST NAMED INVENTOR	ATTORNEY DOCKET NO.	CONFIRMATION NO.
13/168,901	06/24/2011	Ramachandran NARAYANAMURTHY	900RO-005400US	1945

83275 7590 07/15/2011
AMPACC Law Group, PLLC
6100 219th Street SW, Suite 580
Mountlake Terrace, WA 98043

EXAMINER

ART UNIT	PAPER NUMBER
3749	

NOTIFICATION DATE	DELIVERY MODE
07/15/2011	ELECTRONIC

Please find below and/or attached an Office communication concerning this application or proceeding.

The time period for reply, if any, is set in the attached communication.

Notice of the Office communication was sent electronically on above-indicated "Notification Date" to the following e-mail address(es):

docketing@ampacc.com

UNITED STATES PATENT AND TRADEMARK OFFICE

Commissioner for Patents
United States Patent and Trademark Office
P.O. Box 1450
Alexandria, VA 22313-1450
www.uspto.gov

AMPACC Law Group, PLLC
6100 219th Street SW, Suite 580
Mountlake Terrace WA 98043

In re Application of	:	
NARAYANAMURTHY, RAMACHANDRAN	:	DECISION ON PETITION
Application No. 13/168901	:	TO MAKE SPECIAL UNDER
Filed: June 24, 2011	:	THE GREEN TECHNOLOGY
Attorney Docket No. 900RO-005400US	:	PILOT PROGRAM

This is a decision on the petition under 37 CFR 1.102, filed June 24, 2011, to make the above-identified application special under the pilot program for applications pertaining to Green Technologies as set forth in 74 Federal Register Notice 64666 (December 8, 2009) and amended by 75 Federal Register Notice 28554 (May 21, 2010) and 75 Federal Register Notice 69049 (November 10, 2010).

The petition is **granted**.

A grantable petition to make an application special under 37 CFR 1.102 and the pilot program as set forth in 74 FR 64666 must be directed to a nonprovisional application filed under 35 USC 111(a) or be a national stage entry under 35 USC 371, exclusive of any reissue applications.

If reconsideration of this decision is desired, a petition for reconsideration must be filed within ONE (1) MONTH OR THIRTY (30) DAYS from the mail date of this decision, whichever is longer. No extension of this time limit can be granted under 37 CFR 1.136(a) or (b). The petition for reconsideration should include an exhaustive attempt to provide the lacking item(s) noted below, since, after a decision on the petition for reconsideration, no further reconsideration or review of the matter will be undertaken by the Director.

In order to qualify for special status, the following requirements must be met. 1) The application must have no more than 3 independent claims and no more than 20 total claims. 2) The application must not contain any multiple dependent claims. 3) The petition must state the basis for seeking special status, i.e., the claimed invention either: A) materially enhances the quality of the environment or B) materially contributes to: i) the discovery or development of renewable energy resources, ii) the more efficient utilization and conservation of energy resources, or iii) greenhouse gas emission reduction. 4) If the disclosure is not clear on its face that the claimed invention materially contributes under category (A) or (B), the petition must be accompanied by

a statement by the applicant, assignee, or an attorney/agent registered to practice before the Office explaining how the materiality standard is met. 5) A statement that applicant will agree to make an election without traverse in a telephonic interview if a restriction requirement is made by the examiner. 6) The petition to make special must be filed electronically. 7) The petition must be filed at least one day prior to the date that a first Office Action appears in the Patent Application Information Retrieval (PAIR) system. 8) The petition must be accompanied by a request for early publication in compliance with 37 CFR 1.219 and include the publication fee as set forth in 37 CFR 1.18(d).

The requirement for a fee for consideration of the petition to make special for applications pertaining to Green Technologies has been waived.

The instant petition complies with items 1 – 8 above. Accordingly, the above-identified application has been accorded "special" status.

Telephone inquires concerning this decision should be directed to Henry C. Yuen at 571-272-4856.

This application will be forwarded to the Technology Center Art Unit 3749 for action on the merits commensurate with this decision.

/Henry C. Yuen/

Henry C. Yuen
Quality Assurance Specialist
Technology Center TC 3700

UNITED STATES PATENT AND TRADEMARK OFFICE

COMMISSIONER FOR PATENTS
UNITED STATES PATENT AND TRADEMARK OFFICE
P.O. BOX 1450
ALEXANDRIA, VA 22313-1450
www.uspto.gov

ERIC A. LANGBERG
321 RAMBLING WAY
MILFORD PA 18337

MAILED
AUG 30 2011
OFFICE OF PETITIONS

In re Application of
CRAIG D'AMICO
Application No. 13/168,920
Filed: June 24, 2011
Attorney Docket No. 11200.001

DECISION ON PETITION

This is in response to the petition under 37 CFR 1.57(a), filed August 8, 2011, requesting that the above-referenced application be accorded a filing date of June 24, 2011. This petition is being treated pursuant to 37 CFR 1.53(e)(2).[1]

The application papers in the above-identified application were deposited on June 24, 2011. On July 11, 2011, the Office of Patent Application Processing mailed applicants a "Notice of Incomplete Nonprovisional Application," notifying applicants that the application papers had not been accorded a filing date because the application was deposited without drawings.

In response, applicants timely filed this petition. Applicants request that the application be amended to include the inadvertently omitted drawings on the basis that the application as filed contains a claim under 37 CFR 1.78 for the benefit of a prior-filed nonprovisional application and that the inadvertently omitted drawings are completely contained in that prior-filed application. Applicants provided a copy of the omitted drawings with the present petition.

Applicants' arguments and evidence have been considered. However, a review of the application confirms that the application, as filed, contained at least one method claim. MPEP § 601.01(f) provides that:

> It has been USPTO practice to treat an application that contains at least one process or method claim as an application for which a drawing is not necessary for an understanding of the invention under 35 U.S.C. 113 (first sentence).

[1] Any request for review of a notification pursuant to 37 CFR 1.53(e)(1), or a notification that the original application papers lack a portion of the specification or drawing(s), must be by way of a petition accompanied by the fee set forth in § 1.17(f). In the absence of a timely (§ 1.181(f)) petition, the filing date of an application in which the applicants were notified of a filing error pursuant to § 1.53(e)(1) will be the date the filing error is corrected.

Pursuant to § 601.01(f), a drawing is not considered essential for a filing date. Thus, the application is entitled to a filing date without drawings present in the application. Accordingly, the Office should have granted the application a filing date and mailed a Notice of Omitted Items instead of a Notice of Incomplete Nonprovisional Application.

As stated in MPEP § 601.01(g) under the section entitled, "Application Entitled to a Filing Date," applicants may submit an amendment to include the inadvertently omitted portion of the drawing(s) pursuant to 37 CFR 1.57(a):

> [i]f an application was filed on or after September 21, 2004, and contains a claim under 37 CFR 1.55 for priority of a prior-filed foreign application, or a claim under 37 CFR 1.78 for the benefit of a prior-filed provisional, nonprovisional, or international application that was present on the filing date of the application, and the omitted portion of the drawing(s) was inadvertently omitted from the application and is completely contained in the prior-filed application[.]

Please note that no petition is required and that the amendment must comply with 37 CFR 1.57(a) and 37 CFR 1.121. See MPEP § 201.17. Any amendment to include the inadvertently omitted drawing(s) will be considered by the examiner.

The petition is **GRANTED** to the extent the application will be accorded a filing date of June 24, 2011, with no drawings as part of the original disclosure.

Given the basis for granting this petition, the $400.00 petition fee is being refunded to the Deposit Account.

Pursuant to this decision, the application will be referred to Office of Patent Application Processing for:

- **correction of the filing date to June 24, 2011;**
- **for indication in Office records, as appropriate, that "0" sheets of drawings were present on filing, and;**
- **for issuance of a filing receipt.**

Entry of the amendment filed August 8, 2011, will be determined by the examiner.

Telephone inquiries concerning this matter may be directed to Christina Tartera Donnell, Senior Petitions Attorney, at (571) 272-3211.

Christopher Bottorff
Petitions Examiner
Office of Petitions

UNITED STATES PATENT AND TRADEMARK OFFICE

Commissioner for Patents
United States Patent and Trademark Office
P.O. Box 1450
Alexandria, VA 22313-1450
www.uspto.gov

GROSSMAN, TUCKER, PERREAULT & PFLEGER, PLLC
55 SOUTH COMMERICAL STREET
MANCHESTER, NH 03101

MAILED
JUL 27 2011
OFFICE OF PETITIONS

In re Application of	:
Matthias et al.	:
Application No. 13/168,935	: DECISION ON PETITION
Filed: June 24, 2011	: UNDER 37 CFR 1.78(A)(6)
Attorney Docket No. KAT062	: AND 37 CFR 1.55(c)

This is a decision on the communication filed on June 24, 2011, treated petitions under 37 CFR 1.78(a)(6) and 37 CFR 1.55(c), to accept an unintentionally delayed claim under 35 U.S.C. § 119(e) for the benefit of priority to prior-filed provisional application No. 61/363,756 set forth in the amendment filed concurrently with the instant petition and under 35 U.S.C. § 119(a)-(d) for the benefit of the filing date of foreign German Application No. 10 2010 025 006.6 filed June 24, 2010.

As to the benefit claim under 37 CFR 1.78(a)(6):

A petition for acceptance of a claim for late priority under 37 CFR 1.78(a)(6) is only applicable to those applications filed on or after November 29, 2000 and after the expiration of the period specified in 37 CFR 1.78(a)(5)(ii). In addition, the petition under 37 CFR 1.78(a)(6) must be accompanied by:

(1) the reference required by 35 U.S.C. § 119(e) and 37 CFR 1.78(a)(5)(i) of the prior-filed application, unless previously submitted;
(2) the surcharge set forth in § 1.17(t); and
(3) a statement that the entire delay between the date the claim was due under 37 CFR 1.78(a)(5)(ii) and the date the claim was filed was unintentional. The Director may require additional information where there is a question whether the delay was unintentional.

As to the benefit claim under 37 CFR 1.55(c):

A petition under 37 CFR 1.55(c) to accept an unintentionally delayed claim for priority requires:

(1) The nonprovisional application claiming the benefit of an earlier filing date must be filed on or after November 29, 2000;
(2) the claim submitted with the petition must identify the prior foreign application for which priority is claimed, as well as any foreign application for the same subject matter and having a filing date before that of the application for which priority is claimed, by the application number, country,and the filing date, **and be included either in an oath or**

declaration (37 CFR 1.63(c)(2)) or in an Application Data Sheet (37 CFR 1.76(b)(6);

(3) the surcharge as set forth in 37 CFR 1.17(t);

(4) a statement that the entire delay between the date the claim was due under 37 CFR 1.55(a)(1) and the date the claim was filed was unintentional. (The Director may require additional information where there is a question whether the delay was unintentional); and

(5) the above-identified nonprovisional application must be filed within 12 months of the filing date of the foreign application.

The petitions are **DISMISSED.**

The instant pending nonprovisional application was filed after November 29, 2000. The reference to the prior-filed provisional application in addition to the foreign German application was presented upon filing, which is within the later of four months from the actual filing date of the application or sixteen months from the filing date of the prior application requisite for claiming priority.

Further, a review of the file record confirms that the Office entered the claim for priority to the above identified provisional and foreign applications specified in the Application Data Sheet (ADS), filed on June 24, 2011 in the instant application, as shown by the inclusion on the filing receipt mailed July 12, 2011.

In view of the above, the petition 37 CFR 1.78(a)(6) and 37 CFR 1.55(c), and the petition surcharge is not necessary.

Petitioner is advised that a determination that the applicant is entitled to claim benefit of the prior-filed foreign applications will be made by the Examiner.

This matter is being referred to Technology Center AU 1742 for examination in due course and for consideration by the examiner of record of the foreign priority claim under 35 U.S.C. § 119(a)-(d).

Any inquiries directly pertaining to this decision may be directed to Alicia Kelley-Collier at (571) 272-6059. All other inquiries should be directed to the Technology Center.

/Carl Friedman/
Carl Friedman
Petitions Examiner
Office of Petitions

PTO/SB/20PCT-KR (06-10)
Approved for use through 01/31/2015. OMB 0651-0058
U.S. Patent and Trademark Office; U.S DEPARTMENT OF COMMERCE
Under the Paperwork Reduction Act of 1995, no persons are required to respond to a collection of information unless it displays a valid OMB control number.

REQUEST FOR PARTICIPATION IN THE PATENT COOPERATION TREATY – PATENT PROSECUTION HIGHWAY (PCT-PPH) PILOT PROGRAM BETWEEN THE KOREAN INTELLECTUAL PROPERTY OFFICE (KIPO) AND THE USPTO

Application No.:	13/168,936	First Named Inventor:	Wyss
Filing Date:	06/25/2011	Attorney Docket No.:	XPNT62NP
Title of the Invention:	Cross-talk reduction in a bidirectional optoelectronic device		

THIS REQUEST FOR PARTICIPATION IN THE PCT-PPH PILOT PROGRAM ALONG WITH THE REQUIRED DOCUMENTS MUST BE SUBMITTED VIA EFS-WEB. INFORMATION REGARDING EFS-WEB IS AVAILABLE AT HTTP://WWW.USPTO.GOV/EBC/EFS_HELP.HTML.

APPLICANT HEREBY REQUESTS PARTICIPATION IN THE PCT-PPH PILOT PROGRAM AND PETITIONS TO MAKE THE ABOVE-IDENTIFIED APPLICATION SPECIAL UNDER THE PCT-PPH PILOT PROGRAM.

The above-identified application is (1) a national stage entry of the corresponding PCT application, or (2) a national stage entry of another PCT application which claims priority to the corresponding PCT application, or (3) a national application that claims domestic/ foreign priority to the corresponding PCT application, or (4) a national application which forms the basis for the priority claim in the corresponding PCT application, or (5) a continuing application of a U.S. application that satisfies one of (1) to (4) above, or (6) a U.S. application that claims domestic benefit to a U.S. provisional application which forms the basis for the priority claim in the corresponding PCT application.

The corresponding PCT application number(s) is/are: PCT/US2011/041919

The international filing date of the corresponding PCT application(s) is/are: 25 JUNE 2011

I. List of Required Documents:

a. **A copy of the latest international work product (WO/ISA, WO/IPEA, or IPER) in the above-identified corresponding PCT application(s)**

☑ is attached.

☐ is not attached because the document is already in the U.S. application.

b. **A copy of all claims which were indicated as having novelty, inventive step and industrial applicability in the above-identified corresponding PCT application(s)**

☑ is attached.

☐ is not attached because the document is already in the U.S. application.

c. **English translations of the documents in a. and b. above are attached (if the documents are not in the English language). A statement that the English translation is accurate is attached for the document in b. above.**

d. **(1) An information disclosure statement listing the documents cited in the international work products (ISR, WO/ISA, WO/IPEA, IPER) of the corresponding PCT application.**

☑ is attached.

☐ has already been filed in the above-identified U.S. application on _____

(2) Copies of all documents (except for U.S. patents or U.S. patent application publications)

☑ are attached.

☐ have already been filed in the above-identified U.S. application on _____

This collection of information is required by 35 U.S.C. 119, 37 CFR 1.55, and 37 CFR 1.102(d). The information is required to obtain or retain a benefit by the public, which is to file (and by the USPTO to process) an application. Confidentiality is governed by 35 U.S.C. 122 and 37 CFR 1.11 and 1.14. This collection is estimated to take 2 hours to complete, including gathering, preparing, and submitting the completed application form to the USPTO. Time will vary depending upon the individual case. Any comments on the amount of time you require to complete this form and/or suggestions for reducing this burden should be sent to the Chief Information Officer, U.S. Patent and Trademark Office, U.S. Department of Commerce, P.O. Box 1450, Alexandria, VA 22313-1450. DO NOT SEND FEES OR COMPLETED FORMS TO THIS ADDRESS.

Under the Paperwork Reduction Act of 1995, no persons are required to respond to a collection of information unless it displays a valid OMB control number.

REQUEST FOR PARTICIPATION IN THE PCT-PPH PILOT PROGRAM BETWEEN THE KIPO AND THE USPTO

(continued)

Application No.:	13/168,936	First Named Inventor:	Wyss

II. Claims Correspondence Table:

Claims in US Application	Patentable Claims in the corresponding PCT application	Explanation regarding the correspondence
1-19	1-19	identical
20, 21	20, 21	identical except for deleted multiple dependency
22, 27, 28, 30-32	22, 27, 28, 30-32	identical
33, 34	33, 34	identical except for deleted multiple dependency
37, 39-57	37, 39-57	identical
58, 59	58, 59	identical except for deleted multiple dependency
60, 65, 66, 68-70	60, 65, 66, 68-70	identical
71, 72	71, 72	identical except for deleted multiple dependency
75	75	identical

III. All the claims in the US application sufficiently correspond to the patentable claims in the corresponding PCT application.

Signature /David S Alavi - 40310/	Date 03/29/2012
Name (Print/Typed) David S Alavi	Registration Number 40310

PATENT COOPERATION TREATY

From the INTERNATIONAL SEARCHING AUTHORITY

To:

ALAVI DAVID S.

2852 WILLAMETTE STREET #402 EUGENE OR 97405 USA

PCT

NOTIFICATION OF TRANSMITTAL OF THE INTERNATIONAL SEARCH REPORT AND THE WRITTEN OPINION OF THE INTERNATIONAL SEARCHING AUTHORITY, OR THE DECLARATION

(PCT Rule 44.1)

	Date of mailing *(day/month/year)* 10 JANUARY 2012 (10.01.2012)
Applicant's or agent's file reference XPNT62PCT	**FOR FURTHER ACTION** See paragraphs 1 and 4 below
International application No. **PCT/US2011/041919**	International filing date *(day/month/year)* **25 JUNE 2011 (25.06.2011)**
Applicant **HOYA CORPORATION USA**	

1. ☒ The applicant is hereby notified that the international search report and the written opinion of the International Searching Authority have been established and are transmitted herewith.
Filing of amendments and statement under Article 19:
The applicant is entitled, if he so wishes, to amend the claims of the international application (see Rule 46):
When? The time limit for filing such amendments is normally two months from the date of transmittal of the international search report.
Where? Directly to the International Bureau of WIPO, 34 chemin des Colombettes 1211 Geneva 20, Switzerland, Facsimile No.: +41 22 338 82 70
For more detailed instructions, see *PCT Applicant's Guide*, International Phase, paragraphs 9.004 . 9.011.

2. ☐ The applicant is hereby notified that no international search report will be established and that the declaration under Article 17(2)(a) to that effect and the written opinion of the International Searching Authority are transmitted herewith.

3. ☐ **With regard to any protest** against payment of (an) additional fee(s) under Rule 40.2, the applicant is notified that:
☐ the protest together with the decision thereon has been transmitted to the International Bureau together with any request to forward the texts of both the protest and the decision thereon to the designated Offices.
☐ no decision has been made yet on the protest; the applicant will be notified as soon as a decision is made.

4. **Reminders**
The applicant may submit comments on an informal basis on the written opinion of the International Searching Authority to the International Bureau. The International Bureau will send a copy of such comments to all designated Offices unless an international preliminary examination report has been or is to be established. Following the expiration of 30 months from the priority date, these comments will also be made available to the public.

Shortly after the expiration of **18 months** from the priority date, the international application will be published by the International Bureau. If the applicant wishes to avoid or postpone publication, a notice of withdrawal of the international application, or of the priority claim, must reach the International Bureau before the completion of the technical preparations for international publication (Rules 90bis.1 and 90bis.3).

Within **19 months** from the priority date, but only in respect of some designated Offices, a demand for international preliminary examination must be filed if the applicant wishes to postpone the entry into the national phase **until 30 months** from the priority date (in some Offices even later); otherwise, the applicant must, **within 20 months** from the priority date, perform the prescribed acts for entry into the national phase before those designated Offices.
In respect of other designated Offices, the time limit of **30 months** (or later) will apply even if no demand is filed within 19months.

For details about the applicable time limits, Office by Office, see www.wipo.int/pct/en/texts/time_limits.html and the PCT Applicant's Guide, National Chapters.

Name and mailing address of the ISA/KR Korean Intellectual Property Office Government Complex-Daejeon, 189 Cheongsa-ro, Seo-gu, Daejeon 302-701, Republic of Korea Facsimile No. 82-42-472-7140	Authorized officer COMMISSIONER Telephone No. 82-42-481-8754

PATENT COOPERATION TREATY

PCT

INTERNATIONAL SEARCH REPORT

(PCT Article 18 and Rules 43 and 44)

Applicant's or agent's file reference XPNT62PCT	**FOR FURTHER ACTION**	see Form PCT/ISA/220 as well as, where applicable, item 5 below.
International application No. **PCT/US2011/041919**	International filing date *(day/month/year)* **25 JUNE 2011 (25.06.2011)**	(Earliest) Priority Date *(day/month/year)* 25 JUNE 2010 (25.06.2010)
Applicant **HOYA CORPORATION USA**		

This International search report has been prepared by this International Searching Authority and is transmitted to the applicant according to Article 18. A copy is being transmitted to the International Bureau.

This international search report consists of a total of **3** sheets.

☐ It is also accompanied by a copy of each prior art document cited in this report.

1. **Basis of the report**
   a. With regard to the **language**, the international search was carried out on the basis of:
      ☒ the international application in the language in which it was filed
      ☐ a translation of the international application into _____, which is the language of a translation furnished for the purposes of international search (Rules 12.3(a) and 23.1(b))
   b. ☐ This international search report has been established taking into account the **rectification of an obvious mistake** authorized by or notified to this Authority under Rule 91 (Rule 43.6*bis*(a)).
   c. ☐ With regard to any **nucleotide and/or amino acid sequence** disclosed in the international application, see Box No. I.
2. ☐ **Certain claims were found unsearchable** (See Box No. II)
3. ☐ **Unity of invention is lacking** (See Box No. III)
4. With regard to the **title,**
   ☒ the text is approved as submitted by the applicant.
   ☐ the text has been established by this Authority to read as follows:
5. With regard to the **abstract,**
   ☒ the text is approved as submitted by the applicant.
   ☐ the text has been established, according to Rule 38.2, by this Authority as it appears in Box No. IV. The applicant may, within one month from the date of mailing of this international search report, submit comments to this Authority.
6. With regard to the drawings,
   a. the figure of the **drawings** to be published with the abstract is Figure No. **16**
      ☒ as suggested by the applicant.
      ☐ as selected by this Authority, because the applicant failed to suggest a figure.
      ☐ as selected by this Authority, because this figure better characterizes the invention.
   b. ☐ none of the figure is to be published with the abstract.

INTERNATIONAL SEARCH REPORT

International application No.
PCT/US2011/041919

A. CLASSIFICATION OF SUBJECT MATTER

H04B 10/02(2006.01)i, G02B 6/12(2006.01)i, H04B 10/18(2006.01)i

According to International Patent Classification (IPC) or to both national classification and IPC

B. FIELDS SEARCHED

Minimum documentation searched (classification system followed by classification symbols)

H04B 10/02; H04B 10/00; G02B 6/12; H04B 10/12; G02B 6/36

Documentation searched other than minimum documentation to the extent that such documents are included in the fields searched

Korean utility models and applications for utility models
Japanese utility models and applications for utility models

Electronic data base consulted during the international search (name of data base and, where practicable, search terms used)

eKOMPASS(KIPO internal) & Keywords: transceiver, bidirectional, collector, trap

C. DOCUMENTS CONSIDERED TO BE RELEVANT

Category*	Citation of document, with indication, where appropriate, of the relevant passages	Relevant to claim No.
A	US 2002-0102044 A1 (JOSEPH ALAN BARNARD et al.) 01 August 2002 See abstract, paragraph [5]-[6], Figs. 1-2, claims 1-2	1-76
A	US 2007-0086708 A1 (KAZUNHIRO NOJIMA et al.) 19 April 2007 See abstract, paragraph [75]-[86], Figs. 1-2, claim 1	1-76
A	US 2004-0213516 A1 (GORDON GARY B.) 28 October 2004 See abstract, Figs. 2,4,6	1-76
A	US 7606499 B2 (PAN DONG et al.) 20 October 2009 See abstract, column 2 line8~line30, Fig. 1, claim 1	1-76
A	US 6437891 B1 (CHANDRASEKHAR; SETHUMADHAUAN et al.) 20 August 2002 See abstract, Fig. 10	1-76

☐ Further documents are listed in the continuation of Box C. ☒ See patent family annex.

* Special categories of cited documents:
"A" document defining the general state of the art which is not considered to be of particular relevance
"E" earlier application or patent but published on or after the international filing date
"L" document which may throw doubts on priority claim(s) or which is cited to establish the publication date of citation or other special reason (as specified)
"O" document referring to an oral disclosure, use, exhibition or other means
"P" document published prior to the international filing date but later than the priority date claimed
"T" later document published after the international filing date or priority date and not in conflict with the application but cited to understand the principle or theory underlying the invention
"X" document of particular relevance; the claimed invention cannot be considered novel or cannot be considered to involve an inventive step when the document is taken alone
"Y" document of particular relevance; the claimed invention cannot be considered to involve an inventive step when the document is combined with one or more other such documents,such combination being obvious to a person skilled in the art
"&" document member of the same patent family

Date of the actual completion of the international search	Date of mailing of the international search report
09 JANUARY 2012 (09.01.2012)	**10 JANUARY 2012 (10.01.2012)**
Name and mailing address of the ISA/KR Korean Intellectual Property Office Government Complex-Daejeon, 189 Cheongsa-ro, Seo-gu, Daejeon 302-701, Republic of Korea Facsimile No. 82-42-472-7140	Authorized officer LEE, Jin Ick Telephone No. 82-42-481-5770

INTERNATIONAL SEARCH REPORT

Information on patent family members

International application No.

PCT/US2011/041919

Patent document cited in search report	Publication date	Patent family member(s)	Publication date
US 2002-0102044 A1	01.08.2002	GB 0100422 D0	21.02.2001
		GB 2370883 A	10.07.2002
US 2007-0086708 A1	19.04.2007	CN 1902763 A	24.01.2007
		CN 1902763 C0	24.01.2007
		JP 2005-203553 A	28.07.2005
		WO 2005-069384 A1	28.07.2005
US 2004-0213516 A1	28.10.2004	EP 1357684 A2	29.10.2003
		EP 1357684 A3	06.04.2005
		EP 1357684 A3	29.10.2003
		JP 2003-332994 A	21.11.2003
		US 7184669 B2	27.02.2007
US 7606499 B2	20.10.2009	TW 200707718 A	16.02.2007
		US 2007-0025405 A1	01.02.2007
		WO 2007-015702 A2	08.02.2007
		WO 2007-015702 A3	08.02.2007
		WO 2007-015702 A3	12.04.2007
US 6437891 B1	20.08.2002	None	

PATENT COOPERATION TREATY

From the
INTERNATIONAL SEARCHING AUTHORITY

To:
ALAVI DAVID S.

2852 WILLAMETTE STREET #402 EUGENE OR 97405
USA

PCT

WRITTEN OPINION OF THE INTERNATIONAL SEARCHING AUTHORITY

(PCT Rule 43bis.1)

Date of mailing *(day/month/year)*	**10 JANUARY 2012 (10.01.2012)**
Applicant's or agent's file reference XPNT62PCT	**FOR FURTHER ACTION** See paragraph 2 below

International application No.	International filing date *(day/month/year)*	Priority date *(day/month/year)*
PCT/US2011/041919	**25 JUNE 2011 (25.06.2011)**	25 JUNE 2010 (25.06.2010)

International Patent Classification (IPC) or both national classification and IPC

H04B 10/02(2006.01)i, G02B 6/12(2006.01)i, H04B 10/18(2006.01)i

Applicant

HOYA CORPORATION USA

1. This opinion contains indications relating to the following items:

- [x] Box No. I Basis of the opinion
- [ ] Box No. II Priority
- [ ] Box No. III Non-establishment of opinion with regard to novelty, inventive step and industrial applicability
- [ ] Box No. IV Lack of unity of invention
- [x] Box No. V Reasoned statement under Rule 43bis.1(a)(i) with regard to novelty, inventive step or industrial applicability; citations and explanations supporting such statement
- [ ] Box No. VI Certain documents cited
- [ ] Box No. VII Certain defects in the international application
- [ ] Box No. VIII Certain observations on the international application

2. **FURTHER ACTION**

If a demand for international preliminary examination is made, this opinion will be considered to be a written opinion of the International Preliminary Examining Authority ("IPEA") except that this does not apply where the applicant chooses an Authority other than this one to be the IPEA and the chosen IPEA has notified the International Bureau under Rule 66.1bis(b) that written opinions of this International Searching Authority will not be so considered.

If this opinion is, as provided above, considered to be a written opinion of the IPEA, the applicant is invited to submit to the IPEA a written reply together, where appropriate, with amendments, before the expiration of 3 months from the date of mailing of Form PCT/ISA/220 or before the expiration of 22 months from the priority date, whichever expires later.
For further options, see Form PCT/ISA/220.

Name and mailing address of the ISA/KR	Date of completion of this opinion	Authorized officer
Korean Intellectual Property Office Government Complex-Daejeon, 189 Cheongsa-ro, Seo-gu, Daejeon 302-701, Republic of Korea Facsimile No. 82-42-472-7140	09 JANUARY 2012 (09.01.2012)	LEE, Jin Ick Telephone No.82-42-481-5770

WRITTEN OPINION OF THE INTERNATIONAL SEARCHING AUTHORITY

International application No.
PCT/US2011/041919

Box No. I Basis of this opinion

1. With regard to the **language**, this opinion has been established on the basis of:

   ☒ the international application in the language in which it was filed

   ☐ a translation of the international application into _____, which is the language of a translation furnished for the purposes of international search (Rules 12.3(a) and 23.1(b))

2. ☐ This opinion has been established taking into account the **rectification of an obvious mistake** authorized by or notified to this Authority under Rule 91 (Rule 43*bis*.1(a))

3. With regard to any **nucleotide and/or amino acid sequence** disclosed in the international application, this opinion has been established on the basis of:

   a. a sequence listing filed or furnished
   ☐ on paper
   ☐ in electronic form

   b. time of filing or furnishing
   ☐ contained in the international application as filed.
   ☐ filed together with the international application in electronic form.
   ☐ furnished subsequently to this Authority for the purposes of search.

4. ☐ In addition, in the case that more than one version or copy of a sequence listing has been filed or furnished, the required statements that the information in the subsequent or additioanl copies is identical to that in the application as filed or does not go beyond the application as filed, as appropriate, were furnished.

5. Additional comments:

WRITTEN OPINION OF THE INTERNATIONAL SEARCHING AUTHORITY

International application No.
PCT/US2011/041919

Box No. V Reasoned statement under Rule 43bis.1(a)(i) with regard to novelty, inventive step or industrial applicability; citations and explanations supporting such statement

1. Statement

Novelty (N)	Claims	1-76	YES
	Claims	NONE	NO
Inventive step (IS)	Claims	1-76	YES
	Claims	NONE	NO
Industrial applicability (IA)	Claims	1-76	YES
	Claims	NONE	NO

2. Citations and explanations :

Reference is made to the following documents:

D1: US 2002-0102044 A1 (JOSEPH ALAN BARNARD et al.) 01 August 2002
D2: US 2007-0086708 A1 (KAZUNHIRO NOJIMA et al.) 19 April 2007
D3: US 2004-0213516 A1 (GORDON GARY B.) 28 October 2004
D4: US 7606499 B2 (PAN DONG et al.) 20 October 2009
D5: US 6437891 B1 (CHANDRASEKHAR; SETHUMADHAUAN et al.) 20 August 2002

1) Novelty and Inventive step

(1) Independent claim 1

The features of claim 1, such as an optical apparatus, comprise a waveguide substrate, a set of one or more optical waveguides, a light source, one or more light collectors and one or more light traps. The features of claim 1 are not disclosed in any of the documents D1 to D5 nor are they obvious to a person skilled in the art. Accordingly, claim 1 is considered to be novel and to involve an inventive step under PCT Articles 33(2)-(3).

(2) Dependent claims 2-38

The additional features of dependent claims 2-38 are not disclosed in any of the documents D1 to D5 nor are they obvious to a person skilled in the art. Accordingly, claims 2-38 are considered to be novel and to involve an inventive step under PCT Articles 33(2)-(3).

(4) claim 39

Claim 39 describes the same technical concept as claim 1 except in the category. The features of claim 39 are not disclosed in any of the documents D1 to D5, nor are they obvious to a person skilled in the art. Accordingly, claim 39 is considered to be novel and to involve an inventive step under PCT Articles 33(2)-(3).

(4) claims 40-76

The additional features of dependent claims 40-76 are not disclosed in any of the documents D1 to D5 nor are they obvious to a person skilled in the art. Accordingly, claims 40-76 are considered to be novel and to involve an inventive step under PCT Articles 33(2)-(3).

2) Industrial applicability

Claims 1-76 are industrially applicable under PCT Article 33(4).

CLAIMS

What is claimed is:

1. An optical apparatus comprising:
a waveguide substrate;
a set of one or more optical waveguide layers on the substrate;
one or more optical waveguides formed in one or more of the optical waveguide layers, each of the optical waveguides being arranged to substantially confine in two transverse dimensions a corresponding guided optical mode;
a light source positioned on the substrate or on one or more of the waveguide layers, which light source emits an optical signal and is arranged to launch a first fraction of the optical signal to propagate along one of the optical waveguides in the corresponding guided optical mode;
one or more light collectors formed in the optical waveguide layers, each light collector comprising one or more lateral surfaces of the optical waveguide layers and a substantially opaque coating on the lateral surfaces; and
one or more light traps formed in the optical waveguide layers, each light trap comprising one or more lateral surfaces of the optical waveguide layers and a substantially opaque coating on the lateral surfaces,
wherein:
the lateral surfaces of each light trap are arranged to define a corresponding spiral region of the optical waveguide layers, which region includes an open mouth and closed end of the light trap; and
the lateral surfaces of each light collector are arranged to redirect a corresponding portion of a second fraction of the optical signal to propagate into the open mouth of one of the light traps, which second fraction of the optical signal propagates from the light source in one or more of the optical waveguide layers without confinement by any of the optical waveguides in the corresponding guided optical modes.

2. The apparatus of Claim 1 wherein the substrate comprises silicon or doped silicon, and each optical waveguide layer comprises silica, doped silica, silicon nitride, or silicon oxynitride.

3. The apparatus of Claim 1 wherein the light source comprises a laser diode or a light emitting diode.

4. The apparatus of Claim 1 wherein the light source comprises an optical fiber, or an optical waveguide on a second substrate.

5. The apparatus of Claim 1 wherein the light source comprises an optical waveguide splitter, an optical waveguide tap, or a free-space beamsplitter inserted into a gap between segments of the optical waveguide.

6. The apparatus of Claim 1 wherein the lateral surfaces of the light collectors and light traps comprise etched edges of one or more of the optical waveguide layers.

7. The apparatus of Claim 1 wherein the substantially opaque coatings of the lateral surfaces of the light collectors and light traps include a metal layer.

8. The apparatus of Claim 7 wherein the metal layer is absorptive.

9. The apparatus of Claim 7 wherein the metal layer is reflective.

10. The apparatus of Claim 7 wherein the metal layer is absorptive, and the substantially opaque coating includes a reflection suppressing layer between the lateral surface and the metal layer.

11. The apparatus of Claim 1 wherein the lateral surfaces of one or more of the light collectors is curved so as to redirect the corresponding portion of the second fraction of the optical signal that diverges from the light source to converge toward one of the light traps.

12. The apparatus of Claim 11 wherein the curved lateral surface of the light collector approximates a portion of an ellipse, with one focus of the ellipse located at the light source and another focus of the ellipse located at the mouth of the corresponding light trap.

13. The apparatus of Claim 1 wherein one or more of the light collectors comprise one or more substantially flat lateral surfaces and are arranged to redirect the

corresponding portion of the second fraction of the optical signal by two or more successive reflections from the flat lateral surfaces.

14. The apparatus of Claim 1 wherein the optical waveguide that guides the first fraction of the optical signal includes a curved segment and is arranged before the curved segment to pass between a first one and a second one of the light collectors and is arranged after the curved segment to pass between the first light collector and the open mouth of the light trap, and the second light collector is arranged so as to substantially block substantially all straight-line propagation paths through the optical waveguide layers from the light source that lie between the first light collector and the mouth of the light trap.

15. The apparatus of Claim 1 wherein the spiral region subtends an arc greater than about 180°.

16. The apparatus of Claim 1 wherein at least a portion of the spiral region is a cornuate spiral region.

17. The apparatus of Claim 1 further comprising a photodetector positioned on the waveguide substrate or on one or more of the waveguide layers.

18. The apparatus of Claim 17 wherein the light source and the photodetector are positioned on the waveguide substrate within about 2 mm of one another.

19. The apparatus of Claim 17 wherein the waveguide substrate has edge dimensions less than about 10 mm.

20. The apparatus of Claim 17, 18, or 19 wherein sensitivity of the photodetector, with the input electrical signal applied to the light source or the output optical signal emanating from the light source, is within about 3 dB of the sensitivity of the photodetector with no input electrical signal applied to the light source and no output optical signal emanating from the light source.

21. The apparatus of Claim 17, 18, or 19 wherein the photodetector exhibits a cross-talk penalty less than about 3 dB.

22. The apparatus of Claim 1 further comprising:

a photodetector positioned on the waveguide substrate or on one or more of the waveguide layers; and

a protective encapsulant arranged to encapsulate the light source and the photodetector,

wherein the protective encapsulant includes hollow dielectric microspheres dispersed within its volume so as to reduce a cross-talk penalty arising from unwanted electrical signals present in the protective encapsulant to a level below that exhibited by the multi-channel device without the microspheres in the protective encapsulant.

23. The apparatus of Claim 22 wherein the dielectric microspheres are present in an amount so that a dielectric constant of the protective encapsulant is between about 1.7 and about 2.5.

24. The apparatus of Claim 22 wherein the dielectric microspheres are present in an amount so that an average dielectric constant of the protective encapsulant with the microspheres is between about 25% and about 50% less than a dielectric constant of the protective encapsulant without the microspheres.

25. The apparatus of Claim 22 wherein the protective encapsulant comprises between about 25% and about 50% by volume of the dielectric microspheres.

26. The apparatus of Claim 22 wherein the dielectric microspheres have a median diameter between about 40 μm and about 70 μm.

27. The apparatus of Claim 22 wherein the hollow dielectric microspheres comprise hollow silica microspheres.

28. The apparatus of Claim 22 wherein the protective encapsulant comprises a silicone, epoxy, or polyurethane polymer.

29. The apparatus of Claim 22 further comprising an optical encapsulant arranged to fill one or more segments of a free optical path within the optoelectronic device and to encapsulate a portion of the optoelectronic device beneath the protective encapsulant.

30. The apparatus of Claim 22 wherein the protective encapsulant further includes an optical absorber dispersed within its volume so as to reduce a cross-talk penalty arising from unwanted optical signals present in the protective encapsulant to a level below that exhibited by the optoelectronic device without the optical absorber in the protective encapsulant.

31. The apparatus of Claim 30 wherein the light source and the photodetector are positioned on the waveguide substrate within about 2 mm of one another.

32. The apparatus of Claim 30 wherein the waveguide substrate has edge dimensions less than about 10 mm.

33. The apparatus of Claim 30, 31, or 32 wherein sensitivity of the photodetector, with the input electrical signal applied to the light source or the output optical signal emanating from the light source, is within about 3 dB of the sensitivity of the photodetector with no input electrical signal applied to the light source and no output optical signal emanating from the light source.

34. The apparatus of Claim 30, 31, or 32 wherein the photodetector exhibits a cross-talk penalty less than about 3 dB.

35. The apparatus of Claim 30 further comprising an optical encapsulant arranged to fill one or more segments of a free optical path within the optoelectronic device and to encapsulate a portion of the optoelectronic device beneath the protective encapsulant.

36. The apparatus of Claim 30 wherein the optical absorber is present in an amount so that an extinction coefficient κ of the encapsulant is between about 1 cm^{-1} and about 200 cm^{-1} over an operational wavelength range of the optoelectronic device.

37. The apparatus of Claim 30 wherein the optical absorber comprises carbon particles dispersed in the encapsulant.

38. The apparatus of Claim 30 wherein the encapsulant comprises between about 0.1% and about 2% by weight of carbon particles.

39. A method for making an optical apparatus, the method comprising:
forming one or more optical waveguides in one or more of a set of optical waveguide layers formed on a waveguide substrate, each of the optical waveguides being arranged to substantially confine in two transverse dimensions a corresponding guided optical mode;
positioning a light source that emits an optical signal on the substrate or on one or more of the waveguide layers, and arranging the light source to launch a first fraction of the optical signal to propagate along one of the optical waveguides in the corresponding guided optical mode;
forming one or more light collectors in the optical waveguide layers, each light collector comprising one or more lateral surfaces of the optical waveguide layers and a substantially opaque coating deposited on the lateral surfaces;
forming one or more light traps in the optical waveguide layers, each light trap comprising one or more lateral surfaces of the optical waveguide layers and a substantially opaque coating deposited on the lateral surfaces;
arranging the lateral surfaces of each light trap to define a corresponding spiral region of the optical waveguide layers, which region includes an open mouth and closed end of the light trap; and
arranging the lateral surfaces of each light collector to redirect a corresponding portion of a second fraction of the optical signal to propagate into the open mouth of one of the light traps, which second fraction of the optical signal propagates from the light source in one or more of the optical waveguide layers without confinement by any of the optical waveguides in the corresponding guided optical modes.

40. The method of Claim 39 wherein the substrate comprises silicon or doped silicon, and each optical waveguide layer comprises silica, doped silica, silicon nitride, or silicon oxynitride.

41. The method of Claim 39 wherein the light source comprises a laser diode or a light emitting diode.

42. The method of Claim 39 wherein the light source comprises an optical fiber, or an optical waveguide on a second substrate.

43. The method of Claim 39 wherein the light source comprises an optical waveguide splitter, an optical waveguide tap, or a free-space beamsplitter inserted into a gap between segments of the optical waveguide.

44. The method of Claim 39 wherein forming the light collectors and light traps comprises etching edges of one or more of the optical waveguide layers to form the lateral surfaces thereof.

45. The method of Claim 39 wherein the substantially opaque coatings of the lateral surfaces of the light collectors and light traps include a metal layer.

46. The method of Claim 45 wherein the metal layer is absorptive.

47. The method of Claim 45 wherein the metal layer is reflective.

48. The method of Claim 45 wherein the metal layer is absorptive, and the substantially opaque coating includes a reflection suppressing layer between the lateral surface and the metal layer.

49. The method of Claim 39 wherein the lateral surfaces of one or more of the light collectors is curved so as to redirect the corresponding portion of the second fraction of the optical signal that diverges from the light source to converge toward one of the light traps.

50. The method of Claim 49 wherein the curved lateral surface of the light collector approximates a portion of an ellipse, with one focus of the ellipse located at the light source and another focus of the ellipse located at the mouth of the corresponding light trap.

51. The method of Claim 39 wherein one or more of the light collectors comprise one or more substantially flat lateral surfaces and are arranged to redirect the corresponding portion of the second fraction of the optical signal by two or more successive reflections from the flat lateral surfaces.

52. The method of Claim 39 wherein the optical waveguide that guides the first fraction of the optical signal includes a curved segment and is arranged before the curved segment to pass between a first one and a second one of

the light collectors and is arranged after the curved segment to pass between the first light collector and the open mouth of the light trap, and the second light collector is arranged so as to substantially block substantially all straight-line propagation paths through the optical waveguide layers from the light source that lie between the first light collector and the mouth of the light trap.

53. The method of Claim 39 wherein the spiral region subtends an arc greater than about 180°.

54. The method of Claim 39 wherein at least a portion of the spiral region is a cornuate spiral region.

55. The method of Claim 39 further comprising positioning a photodetector on the waveguide substrate or on one or more of the waveguide layers.

56. The method of Claim 55 wherein the light source and the photodetector are positioned on the waveguide substrate within about 2 mm of one another.

57. The method of Claim 55 wherein the waveguide substrate has edge dimensions less than about 10 mm.

58. The method of Claim 55, 56, or 57 wherein sensitivity of the photodetector, with the input electrical signal applied to the light source or the output optical signal emanating from the light source, is within about 3 dB of the sensitivity of the photodetector with no input electrical signal applied to the light source and no output optical signal emanating from the light source.

59. The method of Claim 55, 56, or 57 wherein the photodetector exhibits a cross-talk penalty less than about 3 dB.

60. The method of Claim 39 further comprising:

positioning a photodetector on the waveguide substrate or on one or more of the waveguide layers; and

encapsulating with a protective encapsulant the light source and the photodetector,

wherein the protective encapsulant includes hollow dielectric microspheres dispersed within its volume so as to reduce a cross-talk penalty arising

from unwanted electrical signals present in the protective encapsulant to a level below that exhibited by the multi-channel device without the microspheres in the protective encapsulant.

61. The method of Claim 60 wherein the dielectric microspheres are present in an amount so that a dielectric constant of the protective encapsulant is between about 1.7 and about 2.5.

62. The method of Claim 60 wherein the dielectric microspheres are present in an amount so that an average dielectric constant of the protective encapsulant with the microspheres is between about 25% and about 50% less than a dielectric constant of the protective encapsulant without the microspheres.

63. The method of Claim 60 wherein the protective encapsulant comprises between about 25% and about 50% by volume of the dielectric microspheres.

64. The method of Claim 60 wherein the dielectric microspheres have a median diameter between about 40 μm and about 70 μm.

65. The method of Claim 60 wherein the hollow dielectric microspheres comprise hollow silica microspheres.

66. The method of Claim 60 wherein the protective encapsulant comprises a silicone, epoxy, or polyurethane polymer.

67. The method of Claim 60 further comprising using an optical encapsulant to fill one or more segments of a free optical path within the optoelectronic device and to encapsulate a portion of the optoelectronic device beneath the protective encapsulant.

68. The method of Claim 60 wherein the protective encapsulant further includes an optical absorber dispersed within its volume so as to reduce a cross-talk penalty arising from unwanted optical signals present in the protective encapsulant to a level below that exhibited by the optoelectronic device without the optical absorber in the protective encapsulant.

69. The method of Claim 68 wherein the light source and the photodetector are positioned on the waveguide substrate within about 2 mm of one another.

70. The method of Claim 68 wherein the waveguide substrate has edge dimensions less than about 10 mm.

71. The method of Claim 68, 69, or 70 wherein sensitivity of the photodetector, with the input electrical signal applied to the light source or the output optical signal emanating from the light source, is within about 3 dB of the sensitivity of the photodetector with no input electrical signal applied to the light source and no output optical signal emanating from the light source.

72. The method of Claim 68, 69, or 70 wherein the photodetector exhibits a cross-talk penalty less than about 3 dB.

73. The method of Claim 68 further comprising using an optical encapsulant to fill one or more segments of a free optical path within the optoelectronic device and to encapsulate a portion of the optoelectronic device beneath the protective encapsulant.

74. The method of Claim 68 wherein the optical absorber is present in an amount so that an extinction coefficient κ of the encapsulant is between about 1 cm^{-1} and about 200 cm^{-1} over an operational wavelength range of the optoelectronic device.

75. The method of Claim 68 wherein the optical absorber comprises carbon particles dispersed in the encapsulant.

76. The method of Claim 68 wherein the encapsulant comprises between about 0.1% and about 2% by weight of carbon particles.

UNITED STATES PATENT AND TRADEMARK OFFICE

Commissioner for Patents
United States Patent and Trademark Office
P.O. Box 1450
Alexandria, VA 22313-1450
www.uspto.gov

LAW OFFICE OF MICHAEL A. SANZO, LLC
15400 CALHOUN DR.
SUITE 125
ROCKVILLE MD 20855

MAILED

JAN 23 2012

OFFICE OF PETITIONS

In re Application of
Schick, et al.
Application No. 13/168,958
Filed/Deposited: 25 June, 2011
Attorney Docket No. 26295-18351

DECISION ON PETITION

This is a decision on the petition filed on 28 December, 2011, pursuant to 37 C.F.R. §1.47.

NOTE:

The statements of Petitioner failed to detail any diligent effort whatsoever to ascertain a valid/current/reasonably believed to be last known address to which to transmit the entire application—description, claims, abstract and drawings—to be sent to the non-signing inventor. Petitioner apparently attempted to transmit materials by Email, however, there is no indication of any reply, and so no indication of validity of address and readability of message and attachments.

Consequently, it appears that Petitioner may not have set forth in the petition as required under the Rule the valid/current/reasonably believed to be last known address for the non-signing inventor(s).

On renewed petition, new Counsel may benefit from stepping through the requirements herein. (*See, generally:* MPEP §409.03, and §409.03(a)—the applicable statute (35 U.S.C.§ 116).

The petition as considered pursuant to 37 C.F.R. §1.47(a) is **DISMISSED**.

Rule 47 applicant is given TWO (2) MONTHS from the mailing date of this decision to reply, correcting the below-noted deficiencies. Any reply should be entitled "Request for Reconsideration of Petition Pursuant to 37 C.F.R. §1.47(a)," and should address the deficiencies noted below, except that the reply may include an oath or declaration executed by the non-

signing inventor. **FAILURE TO RESPOND WILL RESULT IN ABANDONMENT OF THE APPLICATION.** Any extensions of time will be governed by 37 C.F.R. §1.136(a).

This is **not** a final agency action within the meaning of 5 U.S.C. §704.

A grantable petition pursuant to 37 C.F.R. §1.47(a) requires: (1) petition and fee; (2) proof that the non-signing inventor cannot be reached or refuses to sign the oath or declaration after having been presented with the application papers (specification: description, claims and drawings); (3) an acceptable oath or declaration in compliance with 35 U.S.C. §§ 115 and 116; and (4) a statement of the last known address of the non-signing inventor(s)—with diligence in the effort to ascertain the validity of the address set forth as the reasonably believed to be last known/current/valid address.

Petitioner does not seem to have worked through the requirements of the petition, as set forth above, in satisfaction of those requirements. (*See, generally:* MPEP §409.03, and §409.03(a)—the applicable statute (35 U.S.C.§ 116).

In particular, Petitioner has not as of this writing satisfied the requirement(s) of the petition as listed above and discussed below.

Petitioners always are reminded that for transmission by Email of any document to be accepted by the Office, written acknowledgment of receipt and readability of the message and all applicable attachments of required materials must be provided.

BACKGROUND

The record reflects as follows:

The application was deposited on 25 June, 2011.

On 7 July, 2011, the Office mailed a Notice of Missing Parts, indicating therein the requirement, *inter alia*, for a fully executed oath/declaration.

On 28 December, 2011, Petitioners Andrew McAleavey (Reg. No 50,535) and Michael A Sanzo (Reg. No. 36,912) filed, *inter alia*, a request and fee for extension of time, a petition and fee pursuant to the regulations at 37 C.F.R. §1.47 an oath/declaration executed by co-inventors Schick and Harrison for themselves and on behalf of non-signing inventor Kevin Murphy (Mr. Murphy). Petitioners stated an address for the non-signing inventor but provided only a showing of Email transmission and no showing of receipt and readability of the message and attachments of a transmittal letter of transmittal (of the entire application (description, claims, abstract and drawings)) to the non-signing inventor no showing/evidence of delivery/deliverability toward a showing of a diligent effort to identify a valid/current/reasonably believed to be last known

address for the non-signing inventor. Thus, Petitioner appeared not to satisfy the requirements under the Rule and in compliance with the guidance in the MPEP Commentary as to, *inter alia*, the failure of Petitioner to provide the valid/current/reasonably believed to be last known address of the non-signing inventor. Thus, the showing of record at this writing is insufficient and Petitioner has failed to satisfy the burden under the Rule. Thus Petitioner failed to make the showing as required under the Rule (37 C.F.R. §1.47(a)) and consistent with the guidance in the Commentary at MPEP §409.03, and §409.03(a).

Petitioners always are reminded:

- *for transmission by Email of any document to be accepted by the Office, written acknowledgment of receipt and readability of the message and all applicable attachments of required materials must be provided; and*

- *of the duties of candor to—with requirement for diligent inquiry before—the Office and to satisfy the Rules of Practice and the guidance in the Commentary at MPEP §409.03, and §409.03(a), et seq.*

Petitioner will find it beneficial to step through the requirements of a grantable petition under 37 C.F.R. §1.47(a) (i.e., (1) petition and fee; (2) proof that the non-signing inventor cannot be reached or refuses to sign the oath or declaration after having been presented with the application papers (specification: description, claims and drawings); (3) an acceptable oath or declaration in compliance with 35 U.S.C. §§ 115 and 116; and (4) a statement of the last known address of the non-signing inventor(s)—with diligence in the effort to ascertain the validity of the address set forth as the reasonably believed to be last known/current/valid address) and satisfy himself that he has complied with these requirements on submission of any renewed petition. (*See also*: the guidance in the Commentary at MPEP §409.03, and §409.03(a), et seq.)

Again, Petitioner has not worked through the requirements of the petition.

Thus, the present incompleteness of the record makes granting of the instant petition inappropriate.

The availability of applications and application papers online to applicants/practitioners who diligently associate their Customer Number with the respective application(s) now provides an applicant/practitioner on-demand information as to events/transactions in an application. Thus, now if one wishes to know the progress in and/or status of an application or the accuracy of the data therein, one need only look at the file online.

Out of an abundance of caution, Petitioners always are reminded that those registered to practice *and* all others who make representations before the Office must inquire into the underlying facts

of representations made to the Office and support averments with the appropriate documentation–since all owe to the Office the continuing duty to disclose.[1]

The instant petition pursuant to 37 C.F.R. §1.47(a) is **dismissed**.

Further correspondence with respect to this matter should be addressed as follows:

By mail: Mail Stop PETITIONS
Commissioner for Patents
Post Office Box 1450
Alexandria, VA 22313-1450

By hand: Customer Service Window
Mail Stop Petitions
Randolph Building
401 Dulany Street
Alexandria, VA 22314

By FAX: (571) 273-8300
ATTN: Office of Petitions

While telephone inquiries regarding this decision may be directed to the undersigned at (571) 272-3214—it is noted, however, that all practice before the Office is in writing (see: 37 C.F.R. §1.2[2]) and the proper authority for action on any matter in this regard are the statutes (35 U.S.C.), regulations (37 C.F.R.) and the commentary on policy (MPEP). Therefore, no telephone discussion may be controlling or considered authority for Petitioner's action(s).

/John J. Gillon, Jr./
John J. Gillon, Jr.
Senior Attorney
Office of Petitions

---

[1] See supplement of 17 June, 1999. The Patent and Trademark Office is relying on petitioner's duty of candor and good faith and accepting a statement made by Petitioner. See Changes to Patent Practice and Procedure, 62 Fed. Reg. at 53160 and 53178, 1203 Off. Gaz. Pat. Office at 88 and 103 (responses to comments 64 and 109)(applicant obligated under 37 C.F.R. §10.18 to inquire into the underlying facts and circumstances when providing statements to the Patent and Trademark Office). See specifically, the regulations at 37 C.F.R. §10.18.

[2] The regulations at 37 C.F.R. §1.2 provide:

§1.2 Business to be transacted in writing.
All business with the Patent and Trademark Office should be transacted in writing. The personal attendance of applicants or their attorneys or agents at the Patent and Trademark Office is unnecessary. The action of the Patent and Trademark Office will be based exclusively on the written record in the Office. No attention will be paid to any alleged oral promise, stipulation, or understanding in relation to which there is disagreement or doubt.

UNITED STATES PATENT AND TRADEMARK OFFICE

Commissioner for Patents
United States Patent and Trademark Office
P.O. Box 1450
Alexandria, VA 22313-1450
www.uspto.gov

LAW OFFICE OF
MICHAEL A. SANZO, LLC
15400 CALHOUN DR.
SUITE 125
ROCKVILLE MD 20855

MAILED
FEB 21 2012
OFFICE OF PETITIONS

In re Application of
Schick, et al.
Application No. 13/168,958
Filed/Deposited: 25 June, 2011
Attorney Docket No. 26295-18351

DECISION ON PETITION

This is a decision on the petition filed on 10 February, 2012, pursuant to 37 C.F.R. §1.47.

The petition as considered pursuant to 37 C.F.R. §1.47(a) is **DISMISSED**.

A grantable petition pursuant to 37 C.F.R. §1.47(a) requires: (1) petition and fee; (2) proof that the non-signing inventor cannot be reached or refuses to sign the oath or declaration after having been presented with the application papers (specification: description, claims and drawings); (3) an acceptable oath or declaration in compliance with 35 U.S.C. §§ 115 and 116; and (4) a statement of the last known address of the non-signing inventor(s)—with diligence in the effort to ascertain the validity of the address set forth as the reasonably believed to be last known/current/valid address.

Petitioner does not seem to have worked through the requirements of the petition, as set forth above, in satisfaction of those requirements. (*See, generally:* MPEP §409.03, and §409.03(a)—the applicable statute (35 U.S.C.§ 116).

Petitioners always are reminded that for transmission by Email of any document to be accepted by the Office, written acknowledgment of receipt and readability of the message and all applicable attachments of required materials must be provided.

BACKGROUND

The record reflects as follows:

The application was deposited on 25 June, 2011.

On 7 July, 2011, the Office mailed a Notice of Missing Parts, indicating therein the requirement, *inter alia*, for a fully executed oath/declaration.

On 28 December, 2011, Petitioners Andrew McAleavey (Reg. No 50,535) and Michael A Sanzo (Reg. No. 36,912) filed, *inter alia*, a request and fee for extension of time, a petition and fee pursuant to the regulations at 37 C.F.R. §1.47 an oath/declaration executed by co-inventors Schick and Harrison for themselves and on behalf of non-signing inventor Kevin Murphy (Mr. Murphy). Petitioners stated an address for the non-signing inventor but provided only a showing of Email transmission and no showing of receipt and readability of the message and attachments of a transmittal letter of transmittal (of the entire application (description, claims, abstract and drawings)) to the non-signing inventor no showing/evidence of delivery/deliverability toward a showing of a diligent effort to identify a valid/current/reasonably believed to be last known address for the non-signing inventor. The petition was dismissed on 23 January, 2011.

On 10 February, 2012, Petitioner re-advanced the petition, and averred that consistent with the guidance in the Commentary at MPEP §409.03, and §409.03(a) et seq., his efforts to search for/locate the non-signing inventor produced an address to which Petitioner sent the application to the non-signing inventor, who executed the oath/declaration and so joined in the application, and in support of the averment, Petitioner submitted a copy of the executed oath/declaration in compliance with 37 C.F.R. §1.63—and so evidencing his joinder.

The availability of applications and application papers online to applicants/practitioners who diligently associate their Customer Number with the respective application(s) now provides an applicant/practitioner on-demand information as to events/transactions in an application. Thus, now if one wishes to know the progress in and/or status of an application or the accuracy of the data therein, one need only look at the file online.

Out of an abundance of caution, Petitioners always are reminded that those registered to practice *and* all others who make representations before the Office must inquire into the underlying facts of representations made to the Office and support averments with the appropriate documentation–since all owe to the Office the continuing duty to disclose.[1]

CONCLUSION

The instant petition under 37 C.F.R. §1.47 is **dismissed as moot for joinder**.

---

[1] See supplement of 17 June, 1999. The Patent and Trademark Office is relying on petitioner's duty of candor and good faith and accepting a statement made by Petitioner. See Changes to Patent Practice and Procedure, 62 Fed. Reg. at 53160 and 53178, 1203 Off. Gaz. Pat. Office at 88 and 103 (responses to comments 64 and 109)(applicant obligated under 37 C.F.R. §10.18 to inquire into the underlying facts and circumstances when providing statements to the Patent and Trademark Office). See specifically, the regulations at 37 C.F.R. §10.18.

In view of the joinder of the inventor, further consideration under 37 C.F.R. §1.47 is not necessary. This application does not have any Rule 1.47 status and no such status should appear on the record for this file. This application should not be returned to this Office for any further consideration under 37 C.F.R. §1.47.

The instant application is released to the Office of Patent Application Processing (OPAP) for further processing in due course.

While telephone inquiries regarding this decision may be directed to the undersigned at (571) 272-3214—it is noted, however, that all practice before the Office is in writing (see: 37 C.F.R. §1.2[2]) and the proper authority for action on any matter in this regard are the statutes (35 U.S.C.), regulations (37 C.F.R.) and the commentary on policy (MPEP). Therefore, no telephone discussion may be controlling or considered authority for Petitioner's action(s).

/John J. Gillon, Jr./
John J. Gillon, Jr.
Senior Attorney
Office of Petitions

[2] The regulations at 37 C.F.R. §1.2 provide:
§1.2 Business to be transacted in writing.
All business with the Patent and Trademark Office should be transacted in writing. The personal attendance of applicants or their attorneys or agents at the Patent and Trademark Office is unnecessary. The action of the Patent and Trademark Office will be based exclusively on the written record in the Office. No attention will be paid to any alleged oral promise, stipulation, or understanding in relation to which there is disagreement or doubt.

UNITED STATES PATENT AND TRADEMARK OFFICE

Commissioner for Patents
United States Patent and Trademark Office
P.O. Box 1450
Alexandria, VA 22313-1450
www.uspto.gov

PAUL S. DRAKE PC
P.O. BOX 203068
AUSTIN, TX 78720-3068

MAILED
APR 16 2012
OFFICE OF PETITIONS

In re Application of	:	
VENTON-WALTERS, et al	:	
Application No. 13/168,993	:	DECISION ON PETITION
Filed: June 26, 2011	:	TO WITHDRAW
Attorney Docket No. OT201101US	:	FROM RECORD
	:	

This is a decision on the Request to Withdraw as attorney or agent of record under 37 C.F.R. § 1.36(b), filed February 13, 2012.

The request is **NOT APPROVED** because it is moot.

A review of the file record indicates that the power of attorney to Paul S. Drake, has been revoked by the assignee of the patent application on March 6, 2012. Accordingly, the request to withdraw under 37 C.F.R. § 1.36(b) is moot.

Inquiries concerning this decision should be directed to undersigned at (571) 272- 6735.

/Diane Goodwyn/
Diane Goodwyn
Petitions Examiner
Office of Petitions

cc: ORBITAL TRACTION, LTD.
C/O DAFFER MCDANIEL, LLP
P.O. BOX 686908
AUSTIN, TX 78720-3068

Doc code : PET.OP.AGE
Description : Petition to make special based on Age/Health

PTO/SB/130 (07-09)
Approved for use through 07/31/2012. OMB 0651- 0031
U.S. Patent and Trademark Office; U.S. DEPARTMENT OF COMMERCE
Under the Paperwork Reduction Act of 1995, no persons are required to respond to a collection of information unless it contains a valid OMB control number

PETITION TO MAKE SPECIAL BASED ON AGE FOR ADVANCEMENT OF EXAMINATION UNDER 37 CFR 1.102(c)(1)

Application Information

Application Number	13/169,025	Confirmation Number	1226	Filing Date	2011-06-26
Attorney Docket Number (optional)	RAR885.04	Art Unit	3751	Examiner	Not yet assigned
First Named Inventor	Peter B. Sanford				
Title of Invention	System for Transferring a Viscous Liquid Between Containers				

Attention: Office of Petitions
An application may be made special for advancement of examination upon filing of a petition showing that the applicant is 65 years of age, or more. No fee is required with such a petition. See 37 CFR 1.102(c)(1) and MPEP 708.02 (IV).

APPLICANT HEREBY PETITIONS TO MAKE SPECIAL FOR ADVANCEMENT OF EXAMINATION IN THIS APPLICATION UNDER 37 CFR 1.102(c)(1) and MPEP 708.02 (IV) ON THE BASIS OF THE APPLICANT'S AGE.

A grantable petition requires one of the following items:
(1) Statement by one named inventor in the application that he/she is 65 years of age, or more; or
(2) Certification by a registered attorney/agent having evidence such as a birth certificate, passport, driver's license, etc. showing one named inventor in the application is 65 years of age, or more.

Name of Inventor who is 65 years of age, or older

Given Name	Middle Name	Family Name	Suffix
Peter	B.	Sanford	

A signature of the applicant or representative is required in accordance with 37 CFR 1.33 and 10.18.
Please see 37 CFR 1.4(d) for the format of the signature.

Select (1) or (2) :

○ (1) I am an inventor in this application and I am 65 years of age, or more.

● (2) I am an attorney or agent registered to practice before the Patent and Trademark Office, and I certify that I am in possession of evidence, and will retain such in the application file record, showing that the inventor listed above is 65 years of age, or more.

Signature	/Richard A. Ryan/	Date (YYYY-MM-DD)	2011-06-27
Name	Richard A. Ryan	Registration Number	39014

PTO/SB/130 (07-09)
Approved for use through 07/31/2012. OMB 0651- 0031
U.S. Patent and Trademark Office; U.S. DEPARTMENT OF COMMERCE
Under the Paperwork Reduction Act of 1995, no persons are required to respond to a collection of information unless it contains a valid OMB control number

Privacy Act Statement

The Privacy Act of 1974 (P.L. 93-579) requires that you be given certain information in connection with your submission of the attached form related to a patent application or patent. Accordingly, pursuant to the requirements of the Act, please be advised that: (1) the general authority for the collection of this information is 35 U.S.C. 2(b)(2); (2) furnishing of the information solicited is voluntary; and (3) the principal purpose for which the information is used by the U.S. Patent and Trademark Office is to process and/or examine your submission related to a patent application or patent. If you do not furnish the requested information, the U.S. Patent and Trademark Office may not be able to process and/or examine your submission, which may result in termination of proceedings or abandonment of the application or expiration of the patent.

The information provided by you in this form will be subject to the following routine uses:

1. The information on this form will be treated confidentially to the extent allowed under the Freedom of Information Act (5 U.S.C. 552) and the Privacy Act (5 U.S.C. 552a). Records from this system of records may be disclosed to the Department of Justice to determine whether the Fr eedom of Information Act requires disclosure of these records.

2. A record from this system of records may be disclosed, as a routine use, in the course of presenting evidence to a court, magistrate, or administrative tribunal, including disclosures to opposing counsel in the course of settlement negotiations.

3. A record in this system of records may be disclosed, as a routine use, to a Member of Congress submitting a request involving an individual, to whom the record pertains, when the individual has requested assistance from the Member with respect to the subject matter of the record.

4. A record in this system of records may be disclosed, as a routine use, to a contractor of the Agency having need for the information in order to perform a contract. Recipients of information shall be required to comply with the requirements of the Privacy Act of 1974, as amended, pursuant to 5 U.S.C. 552a(m).

5. A record related to an International Application filed under the Patent Cooperation Treaty in this system of records may be disclosed, as a routine use, to the International Bureau of the World Intellectual Property Organization, pursuant to the Patent Cooperation Treaty.

6. A record in this system of records may be disclosed, as a routine use, to another federal agency for purposes of National Security review (35 U.S.C. 181) and for review pursuant to the Atomic Energy Act (42 U.S.C. 218(c)).

7. A record from this system of records may be disclosed, as a routine use, to the Administrator, General Services, or his/her designee, during an inspection of records conducted by GSA as part of that agency's responsibility to recommend improvements in records management practices and programs, under authority of 44 U.S.C. 2904 and 2906. Such disclosure shall be made in accordance with the GSA regulations governing inspection of records for this purpose, and any other relevant (i.e., GSA or Commerce) directive. Such disclosure shall not be used to make determinations about indivi duals.

8. A record from this system of records may be disclosed, as a routine use, to the public after either publication of the application pursuant to 35 U.S.C. 122(b) or issuance of a patent pursuant to 35 U.S.C. 151. Further, a record may be disclosed, subject to the limitations of 37 CFR 1.14, as a routine use, to the public if the record was filed in an application which became abandoned or in which the proceedings were terminated and which application is referenced by either a published application, an application open to public inspections or an issued patent.

9. A record from this system of records may be disclosed, as a routine use, to a Federal, State, or local law enforcement agency, if the USPTO becomes aware of a violation or potential violation of law or regulation.

UNITED STATES PATENT AND TRADEMARK OFFICE

Commissioner for Patents
United States Patent and Trademark Office
P.O. Box 1450
Alexandria, VA 22313-1450
www.uspto.gov

In re Application of
Peter B. Sanford

Application No. 13169025

Filed:

Attorney Docket No. RAR885.04

:DECISION ON PETITION TO MAKE SPECIAL
:UNDER 37 CFR 1.102(c)(1)

This is a decision on the electronic petition under 37 CFR 1.102 (c)(1), filed 27-JUN-2011 to make the above-identified application special based on applicant's age as set forth in MPEP § 708.02, Section IV.

The petition is **GRANTED**.

A grantable petition to make an application special under 37 CFR 1.102(c)(1), MPEP § 708.02, Section IV: Applicant's Age must include a statement by applicant or a registered practitioner having evidence that applicant is at least 65 years of age. No fee is required.

Accordingly, the above-identified application has been accorded "special" status and will be taken up for action by the examiner upon the completion of all pre-examination processing.

Telephone inquiries concerning this electronic decision should be directed to the Electronic Business Center at 866-217-9197.

All other inquiries concerning either the examination or status of the application should be directed to the Technology Center.

PTO/SB/20PCT-EP (01-10)
Approved for use through 01/31/2012. OMB 0651-0058
U.S. Patent and Trademark Office; U. S. DEPARTMENT OF COMMERCE
Under the Paperwork Reduction Act of 1995, no persons are required to respond to a collection of information unless it displays a valid OMB control number.

REQUEST FOR PARTICIPATION IN THE PATENT COOPERATION TREATY - PATENT PROSECUTION HIGHWAY (PCT-PPH) PILOT PROGRAM BETWEEN THE EUROPEAN PATENT OFFICE (EPO) AND THE USPTO

Application No:	13/169,107	Filing date:	27 June 2011
First Named Inventor:	MC KIERNAN, Robin Lynn		
Title of the Invention:	Superabsorbent Polymer Particles Coated With A Hydrophilic Elastomer And Absorbent Article Comprising Such Particles		

THIS REQUEST FOR PARTICIPATION IN THE PCT-PPH PILOT PROGRAM ALONG WITH THE REQUIRED DOCUMENTS MUST BE SUBMITTED VIA EFS-WEB. INFORMATION REGARDING EFS-WEB IS AVAILABLE AT HTTP://WWW.USPTO.GOV/EBC/EFS_HELP.HTML

APPLICANT HEREBY REQUESTS PARTICIPATION IN THE PCT-PPH PROGRAM AND PETITIONS TO MAKE THE ABOVE-IDENTIFIED APPLICATION SPECIAL UNDER THE PCT-PPH PROGRAM.

The above-identified application is (1) a national stage entry of the corresponding PCT application, or (2) a national stage entry of another PCT application which claims priority to the corresponding PCT application, or (3) a national application that claims domestic/ foreign priority to the corresponding PCT application, or (4) a national application which forms the basis for the priority claim in the corresponding PCT application.

The corresponding PCT application number(s) is/are: PCT/US2011/042117

The international date of the corresponding PCT application(s) is/are: 06/28/2011

I. List of Required Documents:

a. **A copy of the latest international work product (WO/ISA, WO/IPEA, or IPER) in the above-identified corresponding PCT application(s)**

☐ Is attached

☑ Is not attached because the document is already in the U.S. application.

b. **A copy of all claims which were indicated as having novelty, inventive step and industrial applicability in the above-identified corresponding PCT application(s).**

☑ Is attached.

☐ Is not attached because the document is already in the U.S. application.

c. **English translations of the documents in a. and b. above are attached (if the documents are not in the English language). A statement that the English translation is accurate is attached for the document in b. above.**

d. **(1) An information disclosure statement listing the documents cited in the international work products (ISR, WO/ISA, WO/IPEA, IPER) of the corresponding PCT application.**

☐ Is attached

☑ Has already been filed in the above-identified U.S. application on 9/22/2011 and 11/17/2011

(2) Copies of all documents (except) for U.S. patents or U.S. patent application publications)

☐ Are attached.

☑ Have already been filed in the above-identified U.S. application on 9/22/2011 and 11/17/2011

This collection of information is required by 35 U.S.C. 119, 37 CFR 1.55, and 37 CFR 1.102(d). The information is required to obtain or retain a benefit by the public, which is to file (and by the USPTO to process) an application. Confidentiality is governed by 35 U.S.C. 122 and 37 CFR 1.11 and 1.14. This collection is estimated to take 2 hours to complete, including gathering, preparing, and submitting the completed application form to the USPTO. Time will vary depending upon the individual case. Any comments on the amount of time you require to complete this form and/or suggestions for reducing this burden should be sent to the Chief Information Officer, U.S. Patent and Trademark Office, U.S. Department of Commerce, P.O. Box 1450, Alexandria, VA 22313-1450. DO NOT SEND FEES OR COMPLETED FORMS TO THIS ADDRESS.

Approved for use through 01/31/2012. OMB 0651-0058
U.S.Patent and Trademark Office; U.S. DEPARTMENT OF COMMERCE
Under the Paperwork Reduction Act of 1995, no persons are required to respond to a collection of information unless it displays a valid OMB control number.

REQUEST FOR PARTICIPATION IN THE PCT-PPH PILOT PROGRAM BETWEEN THE EPO AND THE USPTO

(continued)

Application No.:	13/169,107
First Named Inventor:	MC KIERNAN, Robin Lynn

II. Claims Correspondence Table:

Claims in US Application	Patentable Claims in the corresponding PCT Application	Explanation regarding the correspondence
		Please see attached Claims Correspondence Table

III. All the claims in the US application sufficiently correspond to the patentable claims in the corresponding PCT application.

IV. Payment of Fees:

The petition fee under 37 CFR 1.17(h) as required by 37 CFR 1.102(d) must be paid via EFS-Web (using credit card, authorization to charge a deposit account, or electronic funds transfer).

Signature /Andrew A Paul/	Date 18 November 2011
Name (Print/Typed) Andrew A Paul	Registration Number 46,405

Privacy Act Statement

The **Privacy Act of 1974 (P.L. 93-579)** requires that you be given certain information in connection with your submission of the attached form related to a patent application or patent. Accordingly, pursuant to the requirements of the Act, please be advised that: (1) the general authority for the collection of this information is 35 U.S.C. 2(b)(2); (2) furnishing of the information solicited is voluntary; and (3) the principal purpose for which the information is used by the U.S. Patent and Trademark Office is to process and/or examine your submission related to a patent application or patent. If you do not furnish the requested information, the U.S. Patent and Trademark Office may not be able to process and/or examine your submission, which may result in termination of proceedings or abandonment of the application or expiration of the patent.

The information provided by you in this form will be subject to the following routine uses:

1. The information on this form will be treated confidentially to the extent allowed under the Freedom of Information Act (5 U.S.C. 552) and the Privacy Act (5 U.S.C 552a). Records from this system of records may be disclosed to the Department of Justice to determine whether disclosure of these records is required by the Freedom of Information Act.
2. A record from this system of records may be disclosed, as a routine use, in the course of presenting evidence to a court, magistrate, or administrative tribunal, including disclosures to opposing counsel in the course of settlement negotiations.
3. A record in this system of records may be disclosed, as a routine use, to a Member of Congress submitting a request involving an individual, to whom the record pertains, when the individual has requested assistance from the Member with respect to the subject matter of the record.
4. A record in this system of records may be disclosed, as a routine use, to a contractor of the Agency having need for the information in order to perform a contract. Recipients of information shall be required to comply with the requirements of the Privacy Act of 1974, as amended, pursuant to 5 U.S.C. 552a(m).
5. A record related to an International Application filed under the Patent Cooperation Treaty in this system of records may be disclosed, as a routine use, to the International Bureau of the World Intellectual Property Organization, pursuant to the Patent Cooperation Treaty.
6. A record in this system of records may be disclosed, as a routine use, to another federal agency for purposes of National Security review (35 U.S.C. 181) and for review pursuant to the Atomic Energy Act (42 U.S.C. 218(c)).
7. A record from this system of records may be disclosed, as a routine use, to the Administrator, General Services, or his/her designee, during an inspection of records conducted by GSA as part of that agency's responsibility to recommend improvements in records management practices and programs, under authority of 44 U.S.C. 2904 and 2906. Such disclosure shall be made in accordance with the GSA regulations governing inspection of records for this purpose, and any other relevant (*i.e.*, GSA or Commerce) directive. Such disclosure shall not be used to make determinations about individuals.
8. A record from this system of records may be disclosed, as a routine use, to the public after either publication of the application pursuant to 35 U.S.C. 122(b) or issuance of a patent pursuant to 35 U.S.C. 151. Further, a record may be disclosed, subject to the limitations of 37 CFR 1.14, as a routine use, to the public if the record was filed in an application which became abandoned or in which the proceedings were terminated and which application is referenced by either a published application, an application open to public inspection or an issued patent.
9. A record from this system of records may be disclosed, as a routine use, to a Federal, State, or local law enforcement agency, if the USPTO becomes aware of a violation or potential violation of law or regulation.

CENTRAL DOCKETING

DATE REC'D: SEP 14 2011

ATTY/CONTACT:

☐ FAX ☐ MAIL ☒ FILE

PATENT COOPERATION TREATY

From the INTERNATIONAL SEARCHING AUTHORITY

To:
Hughett, Eileen L.
The Procter & Gamble Company
Global Patent Services
Sycamore Building, 4th Floor
299 East Sixth Street
Cincinnati, OH 45202
ETATS-UNIS D'AMERIQUE

NOTIFICATION OF TRANSMITTAL OF THE INTERNATIONAL SEARCH REPORT AND THE WRITTEN OPINION OF THE INTERNATIONAL SEARCHING AUTHORITY, OR THE DECLARATION

(PCT Rule 44.1)

	Date of mailing (day/month/year) 6 September 2011 (06-09-2011)
Applicant's or agent's file reference CM3549Q-JC	**FOR FURTHER ACTION** See paragraphs 1 and 4 below
International application No. PCT/US2011/042117	International filing date (day/month/year) 28 June 2011 (28-06-2011)
Applicant THE PROCTER & GAMBLE COMPANY	

1. [X] The applicant is hereby notified that the international search report and the written opinion of the International Searching Authority have been established and are transmitted herewith.

   Filing of amendments and statement under Article 19:
   The applicant is entitled, if he so wishes, to amend the claims of the International Application (see Rule 46):

   When? The time limit for filing such amendments is normally two months from the date of transmittal of the International Search Report.

   Where? Directly to the International Bureau of WIPO, 34 chemin des Colombettes 1211 Geneva 20, Switzerland, Facsimile No.: (41-22) 338.82.70

   For more detailed instructions, see *PCT Applicant's Guide*, International Phase, paragraphs 9.004 - 9.011.

2. [ ] The applicant is hereby notified that no international search report will be established and that the declaration under Article 17(2)(a) to that effect and the written opinion of the International Searching Authority are transmitted herewith.

3. [ ] **With regard to any protest** against payment of (an) additional fee(s) under Rule 40.2, the applicant is notified that:

   [ ] the protest together with the decision thereon has been transmitted to the International Bureau together with the applicant's request to forward the texts of both the protest and the decision thereon to the designated Offices.

   [ ] no decision has been made yet on the protest; the applicant will be notified as soon as a decision is made.

4. **Reminders**

   The applicant may submit comments on an informal basis on the written opinion of the International Searching Authority to the International Bureau. The International Bureau will send a copy of such comments to all designated Offices unless an international preliminary examination report has been or is to be established. Following the expiration of 30 months from the priority date, these comments will also be made available to the public.

   Shortly after the expiration of 18 months from the priority date, the international application will be published by the International Bureau. If the applicant wishes to avoid or postpone publication, a notice of withdrawal of the international application, or of the priority claim, must reach the International Bureau before completion of the technical preparations for international publication (Rules 90*bis*.1 and 90*bis*.3).

   Within 19 months from the priority date, but only in respect of some designated Offices, a demand for international preliminary examination must be filed if the applicant wishes to postpone the entry into the national phase until 30 months from the priority date (in some Offices even later); otherwise, the applicant must, within 20 months from the priority date, perform the prescribed acts for entry into the national phase before those designated Offices.

   In respect of other designated Offices, the time limit of 30 months (or later) will apply even if no demand is filed within 19 months.

   For details about the applicable time limits, Office by Office, see www.wipo.int/pct/en/texts/time_limits.html and the *PCT Applicant's Guide*, National Chapters.

Name and mailing address of the International Searching Authority European Patent Office, P.B. 5818 Patentlaan 2 NL-2280 HV Rijswijk Tel. (+31-70) 340-2040 Fax: (+31-70) 340-3016	Authorized officer CAMARA, Sita Tel: +49 (0)89 2399-8790

PATENT COOPERATION TREATY

PCT

INTERNATIONAL SEARCH REPORT

(PCT Article 18 and Rules 43 and 44)

Applicant's or agent's file reference CM3549Q-JC	FOR FURTHER ACTION	see Form PCT/ISA/220 as well as, where applicable, item 5 below.
International application No. PCT/US2011/042117	International filing date *(day/month/year)* 28/06/2011	(Earliest) Priority Date *(day/month/year)* 28/06/2010
Applicant THE PROCTER & GAMBLE COMPANY		

This international search report has been prepared by this International Searching Authority and is transmitted to the applicant according to Article 18. A copy is being transmitted to the International Bureau.

This international search report consists of a total of 3 sheets.

[X] It is also accompanied by a copy of each prior art document cited in this report.

1. **Basis of the report**
   a. With regard to the **language**, the international search was carried out on the basis of:
      [X] the international application in the language in which it was filed
      [ ] a translation of the international application into _____, which is the language of a translation furnished for the purposes of international search (Rules 12.3(a) and 23.1(b))
   b. [ ] This international search report has been established taking into account the **rectification of an obvious mistake** authorized by or notified to this Authority under Rule 91 (Rule 43.6*bis*(a)).
   c. [ ] With regard to any **nucleotide and/or amino acid sequence** disclosed in the international application, see Box No. I.
2. [ ] **Certain claims were found unsearchable** (See Box No. II)
3. [ ] **Unity of invention is lacking** (see Box No III)
4. With regard to the **title**,
   [X] the text is approved as submitted by the applicant
   [ ] the text has been established by this Authority to read as follows:
5. With regard to the **abstract**,
   [X] the text is approved as submitted by the applicant
   [ ] the text has been established, according to Rule 38.2(b), by this Authority as it appears in Box No. IV. The applicant may, within one month from the date of mailing of this international search report, submit comments to this Authority
6. With regard to the **drawings**,
   a. the figure of the drawings to be published with the abstract is Figure No. fig.1
      [X] as suggested by the applicant
      [ ] as selected by this Authority, because the applicant failed to suggest a figure
      [ ] as selected by this Authority, because this figure better characterizes the invention
   b. [ ] none of the figures is to be published with the abstract

INTERNATIONAL SEARCH REPORT

International application No
PCT/US2011/042117

A. CLASSIFICATION OF SUBJECT MATTER
INV. C08J3/12 C08J3/20 A61L15/22 A61L15/60
ADD.

According to International Patent Classification (IPC) or to both national classification and IPC

B. FIELDS SEARCHED

Minimum documentation searched (classification system followed by classification symbols)
C08J A61L

Documentation searched other than minimum documentation to the extent that such documents are included in the fields searched

Electronic data base consulted during the international search (name of data base and, where practical, search terms used)
EPO-Internal, WPI Data

C. DOCUMENTS CONSIDERED TO BE RELEVANT

Category*	Citation of document, with indication, where appropriate, of the relevant passages	Relevant to claim No.
A	WO 2005/014065 A1 (PROCTER & GAMBLE [US]; FOSSUM RENAE DIANNA [US]; SCHMIDT MATTIAS [DE];) 17 February 2005 (2005-02-17) cited in the application the whole document	1-16
A	WO 2007/038964 A1 (SCA HYGIENE PROD AB [SE]; BERLAND CAROLYN [SE]; ABBAS SHABIRA [SE]) 12 April 2007 (2007-04-12) the whole document	1-16
A	WO 2006/082242 A2 (BASF AG [DE]; DANIEL THOMAS [DE]; RIEGEL ULRICH [DE]; BRUHNS STEFAN [D) 10 August 2006 (2006-08-10) the whole document	1-16

☐ Further documents are listed in the continuation of Box C.

☒ See patent family annex.

* Special categories of cited documents :

"A" document defining the general state of the art which is not considered to be of particular relevance

"E" earlier document but published on or after the international filing date

"L" document which may throw doubts on priority claim(s) or which is cited to establish the publication date of another citation or other special reason (as specified)

"O" document referring to an oral disclosure, use, exhibition or other means

"P" document published prior to the international filing date but later than the priority date claimed

"T" later document published after the international filing date or priority date and not in conflict with the application but cited to understand the principle or theory underlying the invention

"X" document of particular relevance; the claimed invention cannot be considered novel or cannot be considered to involve an inventive step when the document is taken alone

"Y" document of particular relevance; the claimed invention cannot be considered to involve an inventive step when the document is combined with one or more other such documents, such combination being obvious to a person skilled in the art.

"&" document member of the same patent family

Date of the actual completion of the international search	Date of mailing of the international search report
24 August 2011	06/09/2011

Name and mailing address of the ISA/
European Patent Office, P.B. 5818 Patentlaan 2
NL - 2280 HV Rijswijk
Tel. (+31-70) 340-2040,
Fax: (+31-70) 340-3016

Authorized officer
Puttins, Udo

1

INTERNATIONAL SEARCH REPORT

Information on patent family members

International application No
PCT/US2011/042117

Patent document cited in search report	Publication date	Patent family member(s)	Publication date
WO 2005014065 A1	17-02-2005	BR PI0413298 A	10-10-2006
		CA 2534778 A1	17-02-2005
		CA 2534914 A1	17-02-2005
		EP 1654012 A1	10-05-2006
		EP 1651282 A1	03-05-2006
		JP 2007501081 A	25-01-2007
		JP 4689606 B2	25-05-2011
		JP 2007501082 A	25-01-2007
		KR 20060060001 A	02-06-2006
		MX PA06001298 A	11-04-2006
		WO 2005014064 A1	17-02-2005
WO 2007038964 A1	12-04-2007	AT 427761 T	15-04-2009
		AU 2005337069 A1	12-04-2007
		BR PI0520628 A2	19-05-2009
		CA 2624298 A1	12-04-2007
		CN 101277726 A	01-10-2008
		EP 1931397 A1	18-06-2008
		JP 2009509700 A	12-03-2009
		US 2010228213 A1	09-09-2010
WO 2006082242 A2	10-08-2006	EP 1846048 A2	24-10-2007
		US 2008200331 A1	21-08-2008

PATENT COOPERATION TREATY

From the
INTERNATIONAL SEARCHING AUTHORITY

To:

see form PCT/ISA/220

PCT

WRITTEN OPINION OF THE INTERNATIONAL SEARCHING AUTHORITY

(PCT Rule 43*bis*.1)

Date of mailing
(day/month/year) see form PCT/ISA/210 (second sheet)

Applicant's or agent's file reference
see form PCT/ISA/220

FOR FURTHER ACTION
See paragraph 2 below

International application No.	International filing date *(day/month/year)*	Priority date *(day/month/year)*
PCT/US2011/042117	28.06.2011	28.06.2010

International Patent Classification (IPC) or both national classification and IPC
INV. C08J3/12 C08J3/20 A61L15/22 A61L15/60

Applicant
THE PROCTER & GAMBLE COMPANY

1. This opinion contains indications relating to the following items:

- ☒ Box No. I Basis of the opinion
- ☐ Box No. II Priority
- ☐ Box No. III Non-establishment of opinion with regard to novelty, inventive step and industrial applicability
- ☐ Box No. IV Lack of unity of invention
- ☒ Box No. V Reasoned statement under Rule 43*bis*.1(a)(i) with regard to novelty, inventive step and industrial applicability; citations and explanations supporting such statement
- ☐ Box No. VI Certain documents cited
- ☒ Box No. VII Certain defects in the international application
- ☒ Box No. VIII Certain observations on the international application

2. **FURTHER ACTION**

If a demand for international preliminary examination is made, this opinion will usually be considered to be a written opinion of the International Preliminary Examining Authority ("IPEA") except that this does not apply where the applicant chooses an Authority other than this one to be the IPEA and the chosen IPEA has notifed the International Bureau under Rule 66.1*bis*(b) that written opinions of this International Searching Authority will not be so considered.

If this opinion is, as provided above, considered to be a written opinion of the IPEA, the applicant is invited to submit to the IPEA a written reply together, where appropriate, with amendments, before the expiration of 3 months from the date of mailing of Form PCT/ISA/220 or before the expiration of 22 months from the priority date, whichever expires later.

For further options, see Form PCT/ISA/220.

3. For further details, see notes to Form PCT/ISA/220.

Name and mailing address of the ISA:	Date of completion of this opinion	Authorized Officer
European Patent Office D-80298 Munich Tel. +49 89 2399 - 0 Fax: +49 89 2399 - 4465	see form PCT/ISA/210	Puttins, Udo Telephone No. +49 89 2399-8661

WRITTEN OPINION OF THE INTERNATIONAL SEARCHING AUTHORITY

International application No.
PCT/US2011/042117

Box No. I Basis of the opinion

1. With regard to the **language**, this opinion has been established on the basis of:

   ☒ the international application in the language in which it was filed

   ☐ a translation of the international application into , which is the language of a translation furnished for the purposes of international search (Rules 12.3(a) and 23.1 (b)).

2. ☐ This opinion has been established taking into account the **rectification of an obvious mistake** authorized by or notified to this Authority under Rule 91 (Rule 43bis.1(a))

3. With regard to any **nucleotide and/or amino acid sequence** disclosed in the international application, this opinion has been established on the basis of a sequence listing filed or furnished:

   a. (means)

   ☐ on paper

   ☐ in electronic form

   b. (time)

   ☐ in the international application as filed

   ☐ together with the international application in electronic form

   ☐ subsequently to this Authority for the purposes of search

4. ☐ In addition, in the case that more than one version or copy of a sequence listing has been filed or furnished, the required statements that the information in the subsequent or additional copies is identical to that in the application as filed or does not go beyond the application as filed, as appropriate, were furnished.

5. Additional comments:

Box No. V Reasoned statement under Rule 43*bis*.1(a)(i) with regard to novelty, inventive step or industrial applicability; citations and explanations supporting such statement

1. Statement

Novelty (N)	Yes:	Claims	1-16
	No:	Claims	
Inventive step (IS)	Yes:	Claims	1-16
	No:	Claims	
Industrial applicability (IA)	Yes:	Claims	1-16
	No:	Claims	

2. Citations and explanations

see separate sheet

Box No. VII Certain defects in the international application

The following defects in the form or contents of the international application have been noted:

see separate sheet

Box No. VIII Certain observations on the international application

The following observations on the clarity of the claims, description, and drawings or on the question whether the claims are fully supported by the description, are made:

see separate sheet

Re Item V

Reasoned statement under Rule 66.2(a)(ii) with regard to novelty and inventive step; citations and explanations supporting such statement

Reference is made to the following document:

D1 WO 2005/014065 A1 (PROCTER & GAMBLE [US]; FOSSUM RENAE DIANNA [US]; SCHMIDT MATTIAS [DE];) 17 February 2005 (cited in the application)

1. Novelty (Art.33(2) PCT):

The subject-matter of present claims 1 to 16 is considered novel over the prior art documents cited in the International Search Report and the application, since none of the documents discloses superabsorbent polymer particles, coated with a block copolymer comprising at least four blocks being at least two hard blocks, one soft block and one hydrophilic block, wherein a the soft block is sandwiched between the hard blocks.

2.Inventive Step (Art.33(3) PCT):

The subject-matter of present claims 1 to 16 is based upon an inventive step, since there is no hint in document D1, which is considered to represent the closest prior art, alone or in combination with any other document cited in the International Search Report for the claimed particles for the following reasons:

D1 discloses also superabsorbent polymer particles, coated with a block copolymer (cf.D1, claims 1, 9).

The particles claimed in the present claims differs from that disclosed in D1 in that the coating comprises a block copolymer consisting of at least 4 blocks, one of which is a hydrophilic block, instead of only 2 blocks without a hydrophilic block, as disclosed in D1.

As compared to the disclosure of D1, the problem to be solved by the present application may be regarded as to provide superabsorbent polymer particles which should have a good transportation of water based liquids through the coating into the polymer particles and should have a good stability of the coating upon expansion of the superabsorbent particles.

The applicants have shown in several examples that the problem posed was solved by the claimed polymer particles.

Since there is no teaching in D1 for the use of the above coating based upon the block copolymer comprising four blocks and no teaching in any other document found in the International Search Report for this specific superabsorbent particles, the claimed p-articles could not be rendered obvious by document D1.

Therefore, the presence of an inventive step can be acknowledged.

Re Item VII

Certain defects in the international application

a) The expression "and the like" found on pages 1 and 4 is obscure and indefinite.

b) One occurrence of the word "block" on page 3, line 13, is redundant.

c) The vague and imprecise statement in the description on page 28, last paragraph, implies that the subject-matter for which protection is sought may be different to that defined by the claims, thereby resulting in lack of clarity of the claims (Art. 6 PCT) when used to interpret them (see the PCT Guidelines, C-III, 4.3a).

Re Item VIII

Certain observations on the international application

1) The expression "wherein the hydrophilic block (C) comprises 5-50%" is vague and indefinite (Art.6 PCT) as it is not clear which these figures refer to.

2) The meaning of the abbreviation "WVTR" found in claim 10 is not clear. It could be supplemented by incorporating the expression in brackets found at page 11, lines 4 to 5, into the claim.

3) The presence of the wording "preferably" in present claim 14 and the preferred embodiment that follow it has absolutely no limiting effect upon the scope of the claim (Art. 6 PCT).

Possible steps after receipt of the international search report (ISR) and written opinion of the International Searching Authority (WO-ISA)

General information	For all international applications filed on or after 01/01/2004 the competent ISA will establish an ISR. It is accompanied by the WO-ISA. Unlike the former written opinion of the IPEA (Rule 66.2 PCT), the WO-ISA is not meant to be responded to, but to be taken into consideration for further procedural steps. This document explains about the possibilities.
Amending claims under Art. 19 PCT	Within 2 months after the date of mailing of the ISR and the WO-ISA the applicant may file amended claims under Art. 19 PCT directly with the International Bureau of WIPO. The PCT reform of 2004 did not change this procedure. For further information please see Rule 46 PCT as well as form PCT/ISA/220 and the corresponding Notes to form PCT/ISA/220.
Filing a demand for international preliminary examination	In principle, the WO-ISA will be considered as the written opinion of the IPEA. This should, in many cases, make it unnecessary to file a demand for international preliminary examination. If the applicant nevertheless wishes to file a demand this must be done before expiry of 3 months after the date of mailing of the ISR/WO-ISA or 22 months after priority date, whichever expires later (Rule 54bis PCT). Amendments under Art. 34 PCT can be filed with the IPEA as before, normally at the same time as filing the demand (Rule 66.1 (b) PCT). If a demand for international preliminary examination is filed and no comments/amendments have been received the WO-ISA will be transformed by the IPEA into an IPRP (International Preliminary Report on Patentability) which would merely reflect the content of the WO-ISA. The demand can still be withdrawn (Art. 37 PCT).
Filing informal comments	After receipt of the ISR/WO-ISA the applicant may file informal comments on the WO-ISA directly with the International Bureau of WIPO. These will be communicated to the designated Offices together with the IPRP (International Preliminary Report on Patentability) at 30 months from the priority date. Please also refer to the next box.
End of the international phase	At the end of the international phase the International Bureau of WIPO will transform the WO-ISA or, if a demand was filed, the written opinion of the IPEA into the IPRP, which will then be transmitted together with possible informal comments to the designated Offices. The IPRP replaces the former IPER (international preliminary examination report).
Relevant PCT Rules and more information	Rule 43 PCT, Rule 43bis PCT, Rule 44 PCT, Rule 44bis PCT, PCT Newsletter 12/2003, OJ 11/2003, OJ 12/2003

BNSDOCID: <XS____ __20070401OCK_I_>

CLAIMS

What is claimed is:

1. Coated superabsorbent polymer particles, being coated with a block copolymer, wherein the block copolymer is obtainable by

   - preparing a sequence of soft block(s) (A) and hard blocks (B), the sequence comprising at least three blocks being at least a first soft block, a first hard block and a second hard block wherein the first soft block is sandwiched between the first and second hard blocks (B),

   - combining the sequence of soft block(s) and hard blocks with a hydrophilic block (C) block, or combining the sequence of soft block(s) and hard blocks with a hydrophilic block precursor and subsequently transforming the hydrophilic block precursor into the hydrophilic block (C).

2. The coated superabsorbent polymer particles of claim 1, wherein the hydrophilic block (C), comprises at least 10 hydrophilic monomer units directly bound to each other.

3. The coated superabsorbent polymer particles according to any of the preceding claims, wherein the hydrophilic block (C), comprises 5 – 50 %.

4. The coated superabsorbent polymer particles according to any of the preceding claims, wherein the block copolymer is present in an amount of from 0.5 – 2% by weight relative to the weight of the coated superabsorbent polymer particles.

5. The coated superabsorbent polymer particles according to any of the preceding claims, wherein the sequence of soft block(s) and hard blocks has at least two glass transition temperatures Tg1 and Tg2, wherein Tg1 and Tg2 differ by at least 20°C and wherein Tg1 is preferably below or equal to 20°C and / or Tg2 is preferably above or equal to 40°C.

6. The coated superabsorbent polymer particles according to any of the preceding claims, wherein the hydrophilic block is comprised of hydrophilic monomeric units comprising one or more functional groups selected from the group consisting of acid groups in their free acid and salt form, ether groups, amine functionalized groups, quaternary ammonium groups, alcoholic groups and combinations thereof.

7. The coated superabsorbent polymer particles according to any of the preceding claims, wherein the superabsorbent polymers comprised by the superabsorbent particles are obtainable by first forming a base polymer by polymerization of a monomer solution comprising:

i) at least one ethylenically unsaturated acid-functional monomer,

ii) at least one crosslinker,

wherein the superabsorbent polymer obtained thereby is dried.

8. The coated superabsorbent polymer particles according to any of the preceding claims, wherein the at least one hydrophilic block comprises monomeric units selected form the group consisting of acrylic acid and salts thereof, methacrylic acid and salts thereof, itaconic acid and salts thereof, dialkylaminoacrylates and quaternary salts thereof, dialkylaminomethacrylates and quaternary salts thereof, dialakylaminoacrylamides and quaternary salts thereof, dialakylaminomethacrylamides and quaternary salts thereof, quaternary salts of vinyl pyridine, ethyleneoxide and ethylene oxide-alkylene oxide copolymers, styrene sulfonic acid and salts thereof and ethylene oxide macromers of acrylates or methacrylates; and combinations thereof, and/or wherein the at least one soft block comprises monomeric units selected from the group consisting of butadiene, isoprene, C2-C30-alkyl-substituted 1,3-dienes, C1-C30-alkyl acrylates; hydrogenated versions of butadiene, hydrogenated versions of isoprene, hydrogenated versions of C2-C30-alkyl-substituted 1,3-dienes and combinations thereof; and

wherein the at least two hard blocks comprise monomer units selected from the group consisting of styrene, C1-C30-alkyl-substituted styrenes, C1-C30-alkyl methacrylates, C1-C3-alkyl methacrylamides and combinations thereof; and/or wherein the block copolymer is a tetra-block copolymer wherein the four blocks are arranged in the sequence B-A-B-C.

9. The coated superabsorbent polymer particles according to any of the preceding claims, wherein the first soft block has a number average molecular weight of 20 000 – 200 000 g/mol; and wherein each of the at least two hard blocks have a number average molecular weight of 4 000 – 20 000 g/mol.

10. The coated superabsorbent polymer particles according to any of the preceding claims, wherein the block copolymer used for the coating exhibits a WVTR of at least 600g/m^2/day when processed into a film and measured according to the WVTR method described herein; and/or wherein the block copolymer used for the coating exhibits a wet-elongation at break value of at least 300% when processed into a film and measured according to the method herein.

11. The coated superabsorbent polymer particles according to any of the preceding claims, wherein the contact angle measured on a film prepared from the sequence of soft block(s)

and hard blocks is higher than the contact angle of the block copolymer when prepared into a film according to the method given herein.

12. The coated superabsorbent polymer particles according to any of the preceding claims, wherein the block copolymer used for the coating has a contact angle of less than 90° when processed into a film according to the method herein.
13. The coated superabsorbent polymer particles according to any of the preceding claims, having a particle size within the range of 45 μm to 4000 μm.
14. An absorbent article comprising the coated superabsorbent particles according to any of the preceding claims wherein the absorbent article preferably further comprises an absorbent core and wherein the coated superabsorbent particles are comprised in the absorbent core.
15. A process for making the coated superabsorbent particles comprising the steps of
    - providing superabsorbent particles;
    - providing a block copolymer or a coating composition comprising the block copolymer;
    - coating the superabsorbent particles with the block copolymer or the coating composition;

    wherein the block copolymer is obtainable by
    - preparing a sequence of soft block(s) (A) and hard blocks (B), the sequence comprising at least three blocks being at least a first soft block, a first hard block and a second hard block wherein the first soft block is sandwiched between the first and second hard blocks (B),
    - combining the sequence of soft block(s) and hard blocks with a hydrophilic block (C) block, or combining the sequence of soft block(s) and hard blocks with a hydrophilic block precursor and subsequently transforming the hydrophilic block precursor into the hydrophilic block (C).
16. The process of claim 15, further comprising the step(s) of drying and / or annealing the coated superabsorbent particles.

Application No.: 13/169,107

First Named Inventor: MC KIERNAN, Robin Lynn

CM3549Q Claims Correspondence Table

Claims in the US Application	Patentable Claims in the corresponding PCT Application	Explanation regarding the correspondence and Comments Regarding Box VIII Observations
1	1	US 1 contains the same limitations as PCT 1
2	2	US 2 contains the same limitations as PCT 2, except: • US modifies numbers with "about"
3	3	US 3 contains the same limitations as PCT 3, except: • US modifies numbers with "about" • US is not multiply dependent **Re Observation VIII(1):** The observation alleges that PCT 3 is vague and indefinite because it is not clear what "comprises 5-50%" refers to. In US 3, Applicants submit that it is clear that this range refers to the amount of hydrophilic block (C), by weight, of the block copolymer.
4	4	US 4 contains the same limitations as PCT 4, except: • US modifies numbers with "about" • US is not multiply dependent
5	5	US 5 contains the same limitations as PCT 5, except: • US modifies numbers with "about" • US is not multiply dependent • US lacks the two "preferably" clauses of PCT, indicating preferred Tg1 and Tg2 values, i.e. "wherein Tg1 is preferably below or equal to 20°C and/or Tg2 is preferably above or equal to 40°C"
6	5	US 6 contains the same limitations as PCT 5, except: • US modifies numbers with "about" • US is not multiply dependent • US contains a limitation drawn to the "preferably" clauses of PCT, indicating preferred Tg1 and Tg2 values, i.e. "wherein Tg1 is preferably below or equal to 20°C and/or Tg2 is preferably above or equal to 40°C"
7	6	US 7 contains the same limitations as PCT 6, except: • US is not multiply dependent
8	7	US 8 contains the same limitations as PCT 7, except: • US is not multiply dependent
9	8	US 9 contains the same limitations as PCT 8, except: • US is not multiply dependent • US is drawn only to the monomer limitations relating to the "at least one hydrophilic block", i.e. those preceding the "and/or" in line 9 of PCT
10	8	US 10 contains the same limitations as PCT 8, except: • US is not multiply dependent • US is drawn only to the monomer limitations relating to the "at least one soft block", i.e. those following the "and/or" in line 9 of PCT but preceding the "and/or" in line 16 of PCT

Application No.: 13/169,107

First Named Inventor: MC KIERNAN, Robin Lynn

CM3549Q Claims Correspondence Table

Claims in the US Application	Patentable Claims in the corresponding PCT Application	Explanation regarding the correspondence and Comments Regarding Box VIII Observations
11	8	US 11 contains the same limitations as PCT 8, except: • US is not multiply dependent • US is drawn only to the monomer limitations relating to the "at least two hard blocks", i.e. those following the "and/or" in line 16 of PCT
12	9	US 12 contains the same limitations as PCT 9, except: • US modifies numbers with "about" • US is not multiply dependent
13	10	US 13 contains the same limitations as PCT 10, except: • US modifies numbers with "about" • US is not multiply dependent • US includes a limitation drawn to the block copolymer limitations relating to "WVTR", i.e. those preceding the "and/or" in line 4 of PCT **Re Observation VIII(2):** The observation alleges that in PCT 10, the term "WVTR" is not clear, noting that "it could be supplemented by incorporating the expression in brackets" (emphasis added). Applicants submit that the person of ordinary skill in the relevant art would readily recognize that WVTR stands for Water Vapor Transmission Rate, as this term is widely used in the art. Furthermore, if the skilled person were to be unsure of the meaning of WVTR, Applicants define WVTR at page 10, line 31, of the specification.
14	10	US 14 contains the same limitations as PCT 10, except: • US modifies numbers with "about" • US is not multiply dependent • US includes a limitation drawn to only the block copolymer limitations relating to "wet-elongation", i.e. those following the "and/or" in line 4 of PCT
15	11	US 15 contains the same limitations as PCT 11, except: • US is not multiply dependent
16	12	US 16 contains the same limitations as PCT 12, except: • US is not multiply dependent
17	13	US 17 contains the same limitations as PCT 13, except: • US modifies numbers with "about" • US is not multiply dependent

Application No.: 13/169,107

First Named Inventor: MC KIERNAN, Robin Lynn

CM3549Q Claims Correspondence Table

Claims in the US Application	Patentable Claims in the corresponding PCT Application	Explanation regarding the correspondence and Comments Regarding Box VIII Observations
18	14	US 18 contains the same limitations as PCT 14, except: • US is not multiply dependent • US lacks the "preferably" clause of PCT, indicating preferred configurations of the absorbent article, i.e. "wherein the absorbent article preferably further comprises an absorbent core and wherein the coated superabsorbent particles are comprised in the absorbent core" **Re Observation VIII(3):** The observation alleges that the presence of the word "preferably" in PCT 14 and the preferred embodiment that follows has no limiting effect on the scope of the claim. As noted immediately above, US 18 does not contain a limitation drawn to the "preferred" embodiment; such limitation appearing in US 19, discussed below.
19	14	US 19 contains the same limitations as PCT 14, except: • US is not multiply dependent • US includes a limitation drawn to the "preferably" clause of PCT, indicating preferred configurations of the absorbent article, i.e. "wherein the absorbent article preferably further comprises an absorbent core and wherein the coated superabsorbent particles are comprised in the absorbent core" **Re Observation VIII(3):** The observation alleges that the presence of the word "preferably" in PCT 14 and the preferred embodiment that follows has no limiting effect on the scope of the claim. Applicants submit that scope of US 18 (from which US 19 depends) is broader than that of US 19. For example, US 18 requires that the absorbent article comprise coated superabsorbent particles, while US 19 requires that coated superabsorbent particles be comprised in an absorbent core of the absorbent article.
20	15	US 20 contains the same limitations as PCT 15
21	16	US 21 contains the same limitations as PCT 16

UNITED STATES PATENT AND TRADEMARK OFFICE

Commissioner for Patents
United States Patent and Trademark Office
P.O. Box 1450
Alexandria, VA 22313-1450
www.uspto.gov

THE PROCTER & GAMBLE COMPANY
Global Legal Department - IP
Sycamore Building - 4th Floor
299 East Sixth Street
CINCINNATI OH 45202

MAILED

FEB 27 2012

OFFICE OF PETITIONS

In re Application of
Robin Lynn McKiernan et al.
Application No.: 13/169,107
Filed: June 27, 2011
Atty. Docket No.: CM3549Q
For: Superabsorbent Polymer Particles Coated with . . . Particles

: DECISION ON REQUEST TO
: PARTICIPATE IN THE PATENT
: PROSECUTION HIGHWAY
: PROGRAM AND PETITION
: TO MAKE SPECIAL UNDER
: 37 CFR 1.102(a)

This is a decision on the request to participate in the PCT Patent Prosecution Highway (PCT-PPH) pilot program and the petition under 37 CFR 1.102(a), filed on November 18, 2011, to make the above-identified application special.

The request and petition are **GRANTED**.

Discussion

A grantable request to participate in the PCT-PPH pilot program and petition to make special require:

1) The U.S. application must have an eligible relationship to one or more PCT applications where the ISA or IPEA are Australia, Austria, China, EPO, Finland, JPO, Korea, NPI, Russia, Spain, Sweden and the USPTO;

(2) At least one claim in the PCT application has novelty, inventive step, and industrial applicability and must be free of any observations in Box VIII in the latest work product in the international stage or applicant must identify and explain why the claim(s) is/are not subject to the observation in Box VIII;

(3) Applicant must submit a copy of the claim(s) from the PCT application(s) that have novelty, inventive step, and industrial applicability along with an English translation thereof and a statement that the English translation is accurate, if the claims are not in the English language;

(4) All the claims in the U.S. application must sufficiently correspond or be amended to sufficiently correspond to the claim(s) that have novelty, inventive step, and industrial applicability in the PCT application(s);

(5) Examination of the U.S. application has not begun;

(6) Applicant must submit a copy of the latest international work product from the PCT application indicating that the claim(s) have novelty, inventive step, and industrial applicability along with an English translation thereof and a statement that the English translation is accurate if the latest international work product is not in the English language;

(7) Applicant must submit an IDS listing the documents cited by the PCT examiner in the international work product along with copies of documents except U.S. patents or U.S. patent application publications.

The request to participate in the PCT-PPH pilot program and petition comply with the above requirements. Accordingly, the above-identified application has been accorded "special" status.

Telephone inquiries concerning this decision should be directed to Kimberly Inabinet at 571-272-4618.

All other inquiries concerning the examination or status of the application is accessible in the PAIR system at http://www.uspto.gov/ebc.index.html.

This application will be forwarded to the examiner for action on the merits commensurate with this decision.

FOR

David Bucci
Petitions Examiner
Office of Petitions

PTO/SB/20PCT-EP (01-10)
Approved for use through 01/31/2012. OMB 0651-0058
U.S. Patent and Trademark Office; U. S. DEPARTMENT OF COMMERCE
Under the Paperwork Reduction Act of 1995, no persons are required to respond to a collection of information unless it displays a valid OMB control number.

REQUEST FOR PARTICIPATION IN THE PATENT COOPERATION TREATY - PATENT PROSECUTION HIGHWAY (PCT-PPH) PILOT PROGRAM BETWEEN THE EUROPEAN PATENT OFFICE (EPO) AND THE USPTO

Application No:	13/169,113	Filing date:	27 June 2011
First Named Inventor:	MC KIERNAN, Robin Lynn		
Title of the Invention:	Substrate Coated With A Hydrophilic Elastomer		

THIS REQUEST FOR PARTICIPATION IN THE PCT-PPH PILOT PROGRAM ALONG WITH THE REQUIRED DOCUMENTS MUST BE SUBMITTED VIA EFS-WEB. INFORMATION REGARDING EFS-WEB IS AVAILABLE AT HTTP://WWW.USPTO.GOV/EBC/EFS_HELP.HTML

APPLICANT HEREBY REQUESTS PARTICIPATION IN THE PCT-PPH PROGRAM AND PETITIONS TO MAKE THE ABOVE-IDENTIFIED APPLICATION SPECIAL UNDER THE PCT-PPH PROGRAM.

The above-identified application is (1) a national stage entry of the corresponding PCT application, or (2) a national stage entry of another PCT application which claims priority to the corresponding PCT application, or (3) a national application that claims domestic/ foreign priority to the corresponding PCT application, or (4) a national application which forms the basis for the priority claim in the corresponding PCT application.

The corresponding PCT application number(s) is/are: PCT/US2011/042116

The international date of the corresponding PCT application(s) is/are: 28 June 2011

I. List of Required Documents:

a. **A copy of the latest international work product (WO/ISA, WO/IPEA, or IPER) in the above-identified corresponding PCT application(s)**

☐ is attached

☑ is not attached because the document is already in the U.S. application.

b. **A copy of all claims which were indicated as having novelty, inventive step and industrial applicability in the above-identified corresponding PCT application(s).**

☑ is attached.

☐ is not attached because the document is already in the U.S. application.

c. **English translations of the documents in a. and b. above are attached (if the documents are not in the English language). A statement that the English translation is accurate is attached for the document in b. above.**

d. **(1) An information disclosure statement listing the documents cited in the international work products (ISR, WO/ISA, WO/IPEA, IPER) of the corresponding PCT application.**

☐ is attached

☑ Has already been filed in the above-identified U.S. application on 10/28/2011 and 11/17/2011

(2) Copies of all documents (except) for U.S. patents or U.S. patent application publications)

☐ Are attached.

☑ Have already been filed in the above-identified U.S. application on 10/28/2011 and 11/17/2011

This collection of information is required by 35 U.S.C. 119, 37 CFR 1.55, and 37 CFR 1.102(d). The information is required to obtain or retain a benefit by the public, which is to file (and by the USPTO to process) an application. Confidentiality is governed by 35 U.S.C. 122 and 37 CFR 1.11 and 1.14. This collection is estimated to take 2 hours to complete, including gathering, preparing, and submitting the completed application form to the USPTO. Time will vary depending upon the individual case. Any comments on the amount of time you require to complete this form and/or suggestions for reducing this burden should be sent to the Chief Information Officer, U.S. Patent and Trademark Office, U.S. Department of Commerce, P.O. Box 1450, Alexandria, VA 22313-1450. DO NOT SEND FEES OR COMPLETED FORMS TO THIS ADDRESS.

Approved for use through 01/31/2012. OMB 0651-0058
U.S.Patent and Trademark Office; U.S. DEPARTMENT OF COMMERCE

Under the Paperwork Reduction Act of 1995, no persons are required to respond to a collection of information unless it displays a valid OMB control number.

REQUEST FOR PARTICIPATION IN THE PCT-PPH PILOT PROGRAM BETWEEN THE EPO AND THE USPTO

(continued)

Application No.:	13/169,113
First Named Inventor:	MC KIERNAN, Robin Lynn

II. Claims Correspondence Table:

Claims in US Application	Patentable Claims in the corresponding PCT Application	Explanation regarding the correspondence
		Please see attached Claims Correspondence Table

III. All the claims in the US application sufficiently correspond to the patentable claims in the corresponding PCT application.

IV. Payment of Fees:

The petition fee under 37 CFR 1.17(h) as required by 37 CFR 1.102(d) must be paid via EFS-Web (using credit card, authorization to charge a deposit account, or electronic funds transfer).

Signature /Andrew A Paul/	Date 29 November 2011
Name (Print/Typed) Andrew A Paul	Registration Number 46,405

Privacy Act Statement

The **Privacy Act of 1974 (P.L. 93-579)** requires that you be given certain information in connection with your submission of the attached form related to a patent application or patent. Accordingly, pursuant to the requirements of the Act, please be advised that: (1) the general authority for the collection of this information is 35 U.S.C. 2(b)(2); (2) furnishing of the information solicited is voluntary; and (3) the principal purpose for which the information is used by the U.S. Patent and Trademark Office is to process and/or examine your submission related to a patent application or patent. If you do not furnish the requested information, the U.S. Patent and Trademark Office may not be able to process and/or examine your submission, which may result in termination of proceedings or abandonment of the application or expiration of the patent.

The information provided by you in this form will be subject to the following routine uses:

1. The information on this form will be treated confidentially to the extent allowed under the Freedom of Information Act (5 U.S.C. 552) and the Privacy Act (5 U.S.C 552a). Records from this system of records may be disclosed to the Department of Justice to determine whether disclosure of these records is required by the Freedom of Information Act.
2. A record from this system of records may be disclosed, as a routine use, in the course of presenting evidence to a court, magistrate, or administrative tribunal, including disclosures to opposing counsel in the course of settlement negotiations.
3. A record in this system of records may be disclosed, as a routine use, to a Member of Congress submitting a request involving an individual, to whom the record pertains, when the individual has requested assistance from the Member with respect to the subject matter of the record.
4. A record in this system of records may be disclosed, as a routine use, to a contractor of the Agency having need for the information in order to perform a contract. Recipients of information shall be required to comply with the requirements of the Privacy Act of 1974, as amended, pursuant to 5 U.S.C. 552a(m).
5. A record related to an International Application filed under the Patent Cooperation Treaty in this system of records may be disclosed, as a routine use, to the International Bureau of the World Intellectual Property Organization, pursuant to the Patent Cooperation Treaty.
6. A record in this system of records may be disclosed, as a routine use, to another federal agency for purposes of National Security review (35 U.S.C. 181) and for review pursuant to the Atomic Energy Act (42 U.S.C. 218(c)).
7. A record from this system of records may be disclosed, as a routine use, to the Administrator, General Services, or his/her designee, during an inspection of records conducted by GSA as part of that agency's responsibility to recommend improvements in records management practices and programs, under authority of 44 U.S.C. 2904 and 2906. Such disclosure shall be made in accordance with the GSA regulations governing inspection of records for this purpose, and any other relevant (*i.e.*, GSA or Commerce) directive. Such disclosure shall not be used to make determinations about individuals.
8. A record from this system of records may be disclosed, as a routine use, to the public after either publication of the application pursuant to 35 U.S.C. 122(b) or issuance of a patent pursuant to 35 U.S.C. 151. Further, a record may be disclosed, subject to the limitations of 37 CFR 1.14, as a routine use, to the public if the record was filed in an application which became abandoned or in which the proceedings were terminated and which application is referenced by either a published application, an application open to public inspection or an issued patent.
9. A record from this system of records may be disclosed, as a routine use, to a Federal, State, or local law enforcement agency, if the USPTO becomes aware of a violation or potential violation of law or regulation.

CENTRAL DOCKETING
DATE REC'D
OCT 11 2011
ATTY/A&T CONTACT
☐ FAX ☐ MAIL ☒ FILE

PATENT COOPERATION TREATY

From the INTERNATIONAL SEARCHING AUTHORITY

To:
Hughett, Eileen L.
The Procter & Gamble Company
Global Patent Services
Sycamore Building, 4th Floor
299 East Sixth Street
Cincinnati, OH 45202
ETATS-UNIS D'AMERIQUE

GOPE: EPW (PPOP)

PCT

NOTIFICATION OF TRANSMITTAL OF THE INTERNATIONAL SEARCH REPORT AND THE WRITTEN OPINION OF THE INTERNATIONAL SEARCHING AUTHORITY, OR THE DECLARATION

(PCT Rule 44.1)

Applicant's or agent's file reference OM3550-AF	Date of mailing *(day/month/year)* 7 October 2011 (07-10-2011)
	FOR FURTHER ACTION See paragraphs 1 and 4 below
International application No. PCT/US2011/042116	International filing date *(day/month/year)* 28 June 2011 (28-06-2011)
Applicant THE PROCTER & GAMBLE COMPANY	

1. ☒ The applicant is hereby notified that the international search report and the written opinion of the International Searching Authority have been established and are transmitted herewith.

   Filing of amendments and statement under Article 19:
   The applicant is entitled, if he so wishes, to amend the claims of the International Application (see Rule 46):

   When? The time limit for filing such amendments is normally two months from the date of transmittal of the International Search Report.

   Where? Directly to the International Bureau of WIPO, 34 chemin des Colombettes 1211 Geneva 20, Switzerland, Fascimile No.: (41-22) 338 82.70

   For more detailed instructions, see *PCT Applicant's Guide*, International Phase, paragraphs 9.004 - 9.011.

2. ☐ The applicant is hereby notified that no international search report will be established and that the declaration under Article 17(2)(a) to that effect and the written opinion of the International Searching Authority are transmitted herewith.

3. ☐ **With regard to any protest** against payment of (an) additional fee(s) under Rule 40.2, the applicant is notified that:

   ☐ the protest together with the decision thereon has been transmitted to the International Bureau together with the applicant's request to forward the texts of both the protest and the decision thereon to the designated Offices.

   ☐ no decision has been made yet on the protest; the applicant will be notified as soon as a decision is made.

4. **Reminders**

   The applicant may submit comments on an informal basis on the written opinion of the International Searching Authority to the International Bureau. The International Bureau will send a copy of such comments to all designated Offices unless an international preliminary examination report has been or is to be established. Following the expiration of 30 months from the priority date, these comments will also be made available to the public.

   Shortly after the expiration of **18 months** from the priority date, the international application will be published by the International Bureau. If the applicant wishes to avoid or postpone publication, a notice of withdrawal of the international application, or of the priority claim, must reach the International Bureau before completion of the technical preparations for international publication (Rules 90*bis*.1 and 90*bis*.3).

   Within **19 months** from the priority date, but only in respect of some designated Offices, a demand for international preliminary examination must be filed if the applicant wishes to postpone the entry into the national phase until **30 months** from the priority date (in some Offices even later); otherwise, the applicant must, **within 20 months** from the priority date, perform the prescribed acts for entry into the national phase before those designated Offices.

   In respect of other designated Offices, the time limit of **30 months** (or later) will apply even if no demand is filed within 19 months.

   For details about the applicable time limits, Office by Office, see www.wipo.int/pct/en/texts/time_limits.html and the *PCT Applicant's Guide*, National Chapters.

Name and mailing address of the International Searching Authority European Patent Office, P.B. 5818 Patentlaan 2 NL-2280 HV Rijswijk Tel. (+31-70) 340-2040 Fax: (+31-70) 340-3016	Authorized officer FAUX, Paul Tel: +49 (0)89 2399-8269

PATENT COOPERATION TREATY

PCT

INTERNATIONAL SEARCH REPORT

(PCT Article 18 and Rules 43 and 44)

Applicant's or agent's file reference CM3550-AF	FOR FURTHER ACTION	see Form PCT/ISA/220 as well as, where applicable, item 5 below.
International application No. PCT/US2011/042116	International filing date *(day/month/year)* 28/06/2011	(Earliest) Priority Date *(day/month/year)* 28/06/2010
Applicant THE PROCTER & GAMBLE COMPANY		

This international search report has been prepared by this International Searching Authority and is transmitted to the applicant according to Article 18. A copy is being transmitted to the International Bureau.

This international search report consists of a total of 3 sheets.

[X] It is also accompanied by a copy of each prior art document cited in this report.

1. **Basis of the report**
   a. With regard to the **language**, the international search was carried out on the basis of:
      [X] the international application in the language in which it was filed
      [ ] a translation of the international application into _____, which is the language of a translation furnished for the purposes of international search (Rules 12.3(a) and 23.1(b))
   b. [ ] This international search report has been established taking into account the **rectification of an obvious mistake** authorized by or notified to this Authority under Rule 91 (Rule 43.6*bis*(a)).
   c. [ ] With regard to any **nucleotide and/or amino acid sequence** disclosed in the international application, see Box No. I.
2. [ ] **Certain claims were found unsearchable** (See Box No. II)
3. [ ] **Unity of invention is lacking** (see Box No III)
4. With regard to the **title**,
   [X] the text is approved as submitted by the applicant
   [ ] the text has been established by this Authority to read as follows:
5. With regard to the **abstract**,
   [X] the text is approved as submitted by the applicant
   [ ] the text has been established, according to Rule 38.2(b), by this Authority as it appears in Box No. IV. The applicant may, within one month from the date of mailing of this international search report, submit comments to this Authority
6. With regard to the **drawings**,
   a. the figure of the drawings to be published with the abstract is Figure No. _____
      [ ] as suggested by the applicant
      [ ] as selected by this Authority, because the applicant failed to suggest a figure
      [ ] as selected by this Authority, because this figure better characterizes the invention
   b. [ ] none of the figures is to be published with the abstract

INTERNATIONAL SEARCH REPORT

International application No
PCT/US2011/042116

A. CLASSIFICATION OF SUBJECT MATTER
INV. C08F297/04 C09D153/00 A61L15/24
ADD.

According to International Patent Classification (IPC) or to both national classification and IPC

B. FIELDS SEARCHED

Minimum documentation searched (classification system followed by classification symbols)
C09D C08F A61L

Documentation searched other than minimum documentation to the extent that such documents are included in the fields searched

Electronic data base consulted during the international search (name of data base and, where practical, search terms used)

EPO-Internal, WPI Data

C. DOCUMENTS CONSIDERED TO BE RELEVANT

Category*	Citation of document, with indication, where appropriate, of the relevant passages	Relevant to claim No.
X	EP 0 566 896 A1 (HOECHST AG [DE]) 27 October 1993 (1993-10-27) column 2, line 28 - line 32; claims; examples	1-3, 6-11,14, 15
A	US 3 567 798 A (HAEFELE WALTER R ET AL) 2 March 1971 (1971-03-02) the whole document	1-15
A	EP 0 887 368 A1 (HUELS CHEMISCHE WERKE AG [DE]) 30 December 1998 (1998-12-30) the whole document	1-15

[ ] Further documents are listed in the continuation of Box C. [X] See patent family annex.

* Special categories of cited documents :

"A" document defining the general state of the art which is not considered to be of particular relevance

"E" earlier document but published on or after the international filing date

"L" document which may throw doubts on priority claim(s) or which is cited to establish the publication date of another citation or other special reason (as specified)

"O" document referring to an oral disclosure, use, exhibition or other means

"P" document published prior to the international filing date but later than the priority date claimed

"T" later document published after the international filing date or priority date and not in conflict with the application but cited to understand the principle or theory underlying the invention

"X" document of particular relevance; the claimed invention cannot be considered novel or cannot be considered to involve an inventive step when the document is taken alone

"Y" document of particular relevance; the claimed invention cannot be considered to involve an inventive step when the document is combined with one or more other such documents, such combination being obvious to a person skilled in the art.

"&" document member of the same patent family

Date of the actual completion of the international search	Date of mailing of the international search report
28 September 2011	07/10/2011

Name and mailing address of the ISA/	Authorized officer
European Patent Office, P.B. 5818 Patentlaan 2 NL - 2280 HV Rijswijk Tel. (+31-70) 340-2040, Fax: (+31-70) 340-3016	Iraegui Retolaza, E

2

INTERNATIONAL SEARCH REPORT

Information on patent family members

International application No
PCT/US2011/042116

Patent document cited in search report		Publication date	Patent family member(s)			Publication date
EP 0566896	A1	27-10-1993	DE	4211393	A1	07-10-1993
			JP	7010941	A	13-01-1995
US 3567798	A	02-03-1971	BE	711304	A	26-08-1968
			DE	1745438	A1	09-09-1971
			FR	1574723	A	18-07-1969
			GB	1156300	A	25-06-1969
			NL	6802656	A	29-08-1968
EP 0887368	A1	30-12-1998	CA	2241381	A1	24-12-1998
			DE	19726735	A1	07-01-1999
			JP	11100429	A	13-04-1999
			NO	982942	A	28-12-1998

PATENT COOPERATION TREATY

From the
INTERNATIONAL SEARCHING AUTHORITY

To:

see form PCT/ISA/220

PCT

WRITTEN OPINION OF THE INTERNATIONAL SEARCHING AUTHORITY

(PCT Rule 43*bis*.1)

Date of mailing
(day/month/year) see form PCT/ISA/210 (second sheet)

FOR FURTHER ACTION
See paragraph 2 below

Applicant's or agent's file reference
see form PCT/ISA/220

International application No.	International filing date *(day/month/year)*	Priority date *(day/month/year)*
PCT/US2011/042116	28.06.2011	28.06.2010

International Patent Classification (IPC) or both national classification and IPC
INV. C08F297/04 C09D153/00 A61L15/24

Applicant
THE PROCTER & GAMBLE COMPANY

1. This opinion contains indications relating to the following items:

- ☒ Box No. I — Basis of the opinion
- ☐ Box No. II — Priority
- ☐ Box No. III — Non-establishment of opinion with regard to novelty, inventive step and industrial applicability
- ☐ Box No. IV — Lack of unity of invention
- ☒ Box No. V — Reasoned statement under Rule 43*bis*.1(a)(i) with regard to novelty, inventive step and industrial applicability; citations and explanations supporting such statement
- ☐ Box No. VI — Certain documents cited
- ☐ Box No. VII — Certain defects in the international application
- ☒ Box No. VIII — Certain observations on the international application

2. **FURTHER ACTION**

If a demand for international preliminary examination is made, this opinion will usually be considered to be a written opinion of the International Preliminary Examining Authority ("IPEA") except that this does not apply where the applicant chooses an Authority other than this one to be the IPEA and the chosen IPEA has notified the International Bureau under Rule 66.1*bis*(b) that written opinions of this International Searching Authority will not be so considered.

If this opinion is, as provided above, considered to be a written opinion of the IPEA, the applicant is invited to submit to the IPEA a written reply together, where appropriate, with amendments, before the expiration of 3 months from the date of mailing of Form PCT/ISA/220 or before the expiration of 22 months from the priority date, whichever expires later.

For further options, see Form PCT/ISA/220.

3. For further details, see notes to Form PCT/ISA/220.

Name and mailing address of the ISA:

European Patent Office

D-80298 Munich
Tel. +49 89 2399 - 0
Fax: +49 89 2399 - 4465

Date of completion of this opinion

see form PCT/ISA/210

Authorized Officer

Iraegui Retolaza, E

Telephone No. +49 89 2399-8490

WRITTEN OPINION OF THE INTERNATIONAL SEARCHING AUTHORITY

International application No.
PCT/US2011/042116

Box No. I Basis of the opinion

1. With regard to the **language**, this opinion has been established on the basis of:

   ☒ the international application in the language in which it was filed

   ☐ a translation of the international application into , which is the language of a translation furnished for the purposes of international search (Rules 12.3(a) and 23.1 (b)).

2. ☐ This opinion has been established taking into account the **rectification of an obvious mistake** authorized by or notified to this Authority under Rule 91 (Rule 43bis.1(a))

3. With regard to any **nucleotide and/or amino acid sequence** disclosed in the international application, this opinion has been established on the basis of a sequence listing filed or furnished:

   a. (means)

   ☐ on paper

   ☐ in electronic form

   b. (time)

   ☐ in the international application as filed

   ☐ together with the international application in electronic form

   ☐ subsequently to this Authority for the purposes of search

4. ☐ In addition, in the case that more than one version or copy of a sequence listing has been filed or furnished, the required statements that the information in the subsequent or additional copies is identical to that in the application as filed or does not go beyond the application as filed, as appropriate, were furnished.

5. Additional comments:

Box No. V Reasoned statement under Rule 43*bis*.1(a)(i) with regard to novelty, inventive step or industrial applicability; citations and explanations supporting such statement

1. Statement

Novelty (N)	Yes:	Claims	4, 5, 12, 13, 15
	No:	Claims	1-3, 6-11, 14
Inventive step (IS)	Yes:	Claims	4, 5, 12, 13
	No:	Claims	1-3, 6-11, 14, 15
Industrial applicability (IA)	Yes:	Claims	1-15
	No:	Claims	

2. Citations and explanations

see separate sheet

WRITTEN OPINION OF THE INTERNATIONAL SEARCHING AUTHORITY

International application No.
PCT/US2011/042116

Box No. VIII Certain observations on the international application

The following observations on the clarity of the claims, description, and drawings or on the question whether the claims are fully supported by the description, are made:

see separate sheet

Re Item V

Reasoned statement with regard to novelty, inventive step or industrial applicability; citations and explanations supporting such statement

Reference is made to the following document:

D1 EP 0 566 896 A1 (HOECHST AG [DE]) 27 October 1993 (1993-10-27)

1. Document D1 discloses block copolymers comprising all features of the subject-matter of claim 1 of the present application which therefore lacks novelty under Article 33(2) PCT.

The subject-matter of claim 14 is also contained in the disclosure of D1.

The additional features of claims 2, 3 and 6 to 11 do not contribute to the novelty of the application.

The additional features of claim 15 do not contribute to the patentability of the application under Article 33(3) PCT since they appear to relate to standard variations in the field.

2. The subject-matter of claim 4 is novel over the disclosure of D1 which does not disclose the application of the block copolymers according to claim 1 on substrates selected from the group consisting of woven webs, nonwoven webs, films and laminates thereof.

It was not obvious to the man skilled in the art of absorbent articles, departing from D1 either alone or in combination with the remaining documents cited in the international search report, that the coating known from D1 can be suitably applied onto substrates where mechanic stability toward bending and/or stretching is required.

The subject-matter of claim 4 is therefore novel and implies an inventive step.

For the same reasons, the subject-matter of claim 12 also complies with the provisos of Article 33(2) and(3) PCT.

The subject-matter of claims 5 and 13 is also novel and implies an inventive step.

Re Item VIII

Certain observations on the international application

Claim 10 is open to objection under Article 6 PCT, clarity in what concerns the reference to a method given herein.

Possible steps after receipt of the international search report (ISR) and written opinion of the International Searching Authority (WO-ISA)

General information	For all international applications filed on or after 01/01/2004 the competent ISA will establish an ISR. It is accompanied by the WO-ISA. Unlike the former written opinion of the IPEA (Rule 66.2 PCT), the WO-ISA is not meant to be responded to, but to be taken into consideration for further procedural steps. This document explains about the possibilities.
Amending claims under Art. 19 PCT	Within 2 months after the date of mailing of the ISR and the WO-ISA the applicant may file amended claims under Art. 19 PCT directly with the International Bureau of WIPO. The PCT reform of 2004 did not change this procedure. For further information please see Rule 46 PCT as well as form PCT/ISA/220 and the corresponding Notes to form PCT/ISA/220.
Filing a demand for international preliminary examination	In principle, the WO-ISA will be considered as the written opinion of the IPEA. This should, in many cases, make it unnecessary to file a demand for international preliminary examination. If the applicant nevertheless wishes to file a demand this must be done before expiry of 3 months after the date of mailing of the ISR/WO-ISA or 22 months after priority date, whichever expires later (Rule 54bis PCT). Amendments under Art. 34 PCT can be filed with the IPEA as before, normally at the same time as filing the demand (Rule 66.1 (b) PCT). If a demand for international preliminary examination is filed and no comments/amendments have been received the WO-ISA will be transformed by the IPEA into an IPRP (International Preliminary Report on Patentability) which would merely reflect the content of the WO-ISA. The demand can still be withdrawn (Art. 37 PCT).
Filing informal comments	After receipt of the ISR/WO-ISA the applicant may file informal comments on the WO-ISA directly with the International Bureau of WIPO. These will be communicated to the designated Offices together with the IPRP (International Preliminary Report on Patentability) at 30 months from the priority date. Please also refer to the next box.
End of the international phase	At the end of the international phase the International Bureau of WIPO will transform the WO-ISA or, if a demand was filed, the written opinion of the IPEA into the IPRP, which will then be transmitted together with possible informal comments to the designated Offices. The IPRP replaces the former IPER (international preliminary examination report).
Relevant PCT Rules and more information	Rule 43 PCT, Rule 43bis PCT, Rule 44 PCT, Rule 44bis PCT, PCT Newsletter 12/2003, OJ 11/2003, OJ 12/2003

CLAIMS

What is claimed is:

1. A substrate coated with a block copolymer, wherein the block copolymer is obtainable by
   - preparing a sequence of soft block(s) (A) and hard blocks (B), the sequence comprising at least three blocks being at least a first soft block, a first hard block and a second hard block wherein the first soft block is sandwiched between the first and second hard blocks (B),
   - combining the sequence of soft block(s) and hard blocks with a hydrophilic block (C) block, or combining the sequence of soft block(s) and hard blocks with a hydrophilic block precursor and subsequently transforming the hydrophilic block precursor into the hydrophilic block (C).
2. The substrate of claim 1, wherein the hydrophilic block (C), comprises at least 10 hydrophilic monomer units directly bound to each other.
3. The substrate according to any of the preceding claims, wherein the hydrophilic block (C), comprises 5 – 50 % by weight of the block copolymer.
4. The substrate according to any of the preceding claims, wherein the substrate is selected from the group consisting of woven webs, nonwoven webs, films and laminates thereof.
5. The substrate according to any of the preceding claims, wherein the substrate comprises fibers coated with the block copolymer.
6. The substrate according to any of the preceding claims, wherein the sequence of soft block(s) and hard blocks has at least two glass transition temperatures Tg1 and Tg2, wherein Tg1 and Tg2 differ by at least 20°C and wherein Tg1 is below or equal to 20°C and / or Tg2 is preferably above or equal to 40°C.
7. The substrate according to any of the preceding claims, wherein the hydrophilic block is comprised of hydrophilic monomeric units comprising one or more functional groups selected from the group consisting of acid groups in their free acid and salt form, ether groups, amine functionalized groups, quaternary ammonium groups, alcoholic groups and combinations thereof and/or wherein the at least one hydrophilic block comprises monomeric units selected form the group consisting of acrylic acid and salts thereof, methacrylic acid and salts thereof, itaconic acid and salts thereof, dialkylaminoacrylates and quaternary salts thereof, dialkylaminomethacrylates and quaternary salts thereof, dialakylaminoacrylamides

and quaternary salts thereof, dialakylaminomethacrylamides and quaternary salts thereof, quaternary salts of vinyl pyridine, ethyleneoxide and ethylene oxide-alkylene oxide copolymers, styrene sulfonic acid and salts thereof and ethylene oxide macromers of acrylates or methacrylates; and combinations thereof and/or wherein the at least one soft block comprises monomeric units selected from the group consisting of butadiene, isoprene, C2-C30-alkyl-substituted 1,3-dienes, C1-C30-alkyl acrylates; hydrogenated versions of butadiene, hydrogenated versions of isoprene, hydrogenated versions of C2-C30-alkyl-substituted 1,3-dienes and combinations thereof; and

wherein the at least two hard blocks comprise monomer units selected from the group consisting of styrene, C1-C30-alkyl-substituted styrenes, C1-C30-alkyl methacrylates, C1-C3-alkyl methacrylamides and combinations thereof and/or wherein the block copolymer is a tetra-block copolymer wherein the four blocks are arranged in the sequence B-A-B-C.

8. The substrate according to any of the preceding claims, wherein the first soft block has a number average molecular weight of 20 000 – 200 000 g/mol and

   wherein each of the at least two hard blocks have a number average molecular weight of 4 000 – 20 000 g/mol.

9. The substrate according to any of the preceding claims, wherein the block copolymer used for the coating exhibits a WVTR of at least 600g/m^2/day when processed into a film and measured according to the WVTR method described herein and/or wherein the block copolymer used for the coating exhibits a wet-elongation at break value of at least 300% when processed into a film and measured according to the method herein.

10. The substrate according to any of the preceding claims, wherein the contact angle measured on a film prepared from the sequence of soft block(s) and hard blocks is higher than the contact angle of the block copolymer when prepared into a film according to the method given herein.

11. The substrate according to any of the preceding claims, wherein the block copolymer used for the coating has a contact angle of less than 90° when processed into a film according to the method herein.

12. An absorbent article comprising the coated substrate according to any of the preceding claims.

13. The absorbent article of claim 12, further comprising an absorbent core, a topsheet, a core wrap and / or an acquisition system, wherein the coated substrate is comprised by one or more of the absorbent core, the topsheet, the core wrap and / or the acquisition system.
14. A process for making a coated substrate comprising the steps of
    - providing the substrate;
    - providing a block copolymer or a coating composition comprising the block copolymer;
    - coating the substrate with the block copolymer or the coating composition to form a coated substrate

    wherein the block copolymer is obtainable by
    - preparing a sequence of soft block(s) (A) and hard blocks (B), the sequence comprising at least three blocks being at least a first soft block, a first hard block and a second hard block wherein the first soft block is sandwiched between the first and second hard blocks (B), combining the sequence of soft block(s) and hard blocks with a hydrophilic block (C) block, or combining the sequence of soft block(s) and hard blocks with a hydrophilic block precursor and subsequently transforming the hydrophilic block precursor into the hydrophilic block (C).
15. The process of claim 14, further comprising the step(s) of drying and / or annealing the coated substrate.

Application No.: 13/169,113
Docket No.: CM3550
First Named Inventor: MC KIERNAN, Robin Lynn

Claims Correspondence Table

Claims in the US Application	Patentable Claims in the corresponding PCT Application	Explanation regarding the correspondence and Comments regarding Box VIII Observations (if any)
1	4	US 1 contains the same limitations as PCT 4; US is simply re-written in independent form
2	2, 4	US 2 contains the same limitations as PCT 2, except: • US includes the limitations of PCT 4 • US modifies numbers with "about"
3	3, 4	US 3 contains the same limitations as PCT 3, except: • US includes the limitations of PCT 4 • US modifies numbers with "about" • US is not multiply dependent
4	n/a	US 4 is cancelled
5	4, 5	US 5 contains the same limitations as PCT 5, except: • US includes the limitations of PCT 4 • US is not multiply dependent
6	4, 6	US 6 contains the same limitations as PCT 6, except: • US includes the limitations of PCT 4 • US modifies numbers with "about" • US is not multiply dependent • US lacks the two "preferably" clauses of PCT 6, indicating preferred Tg1 and Tg2 values, i.e. "wherein Tg1 is preferably below or equal to 20°C and/or Tg2 is preferably above or equal to 40°C"
7	4, 6	US 7 contains the same limitations as PCT 6, except: • US includes the limitations of PCT 4 • US modifies numbers with "about" • US is not multiply dependent • US contains a limitation drawn to the "preferably" clauses of PCT, indicating preferred Tg1 and Tg2 values, i.e. "wherein Tg1 is preferably below or equal to 20°C and/or Tg2 is preferably above or equal to 40°C"
8	4, 7	US 8 contains the same limitations as PCT 7, except: • US includes the limitations of PCT 4 • US is not multiply dependent • US is drawn only to the monomer limitations relating to the "hydrophilic block" contained in the first Markush group of PCT 7, i.e. those preceding the "and/or" in line 5 of PCT 7
9	4, 7	US 9 contains the same limitations as PCT 7, except: • US includes the limitations of PCT 4 • US is not multiply dependent • US is drawn only to the monomer limitations relating to the "hydrophilic block" contained in the second Markush group of PCT 7, i.e. those following the "and/or" in line 5 of PCT 7, but preceding the "and/or" in line 12 of PCT 7

Application No.: 13/169,113
Docket No.: CM3550
First Named Inventor: MC KIERNAN, Robin Lynn

Claims Correspondence Table

Claims in the US Application	Patentable Claims in the corresponding PCT Application	Explanation regarding the correspondence and Comments regarding Box VIII Observations (if any)
10	4, 7	US 10 contains the same limitations as PCT 7, except: • US includes the limitations of PCT 4 • US is not multiply dependent • US is drawn only to the monomer limitations relating to the "soft block", i.e. those following the "and/or" in line 12 of PCT 7
11	4, 7	US 11 contains the same limitations as PCT 7, except: • US includes the limitations of PCT 4 • US is not multiply dependent • US is drawn only to the monomer limitations relating to the "block copolymer" being a tetra-block copolymer and having a certain monomer sequence, i.e. those following the "and/or" in line 19 of PCT 7
12	4, 8	US 12 contains the same limitations as PCT 8, except: • US includes the limitations of PCT 4 • US modifies numbers with "about" • US is not multiply dependent
13	4, 9	US 13 contains the same limitations as PCT 9, except: • US includes the limitations of PCT 4 • US modifies numbers with "about" • US is not multiply dependent • US includes a limitation drawn to only the block copolymer limitations relating to "WVTR", i.e. those preceding the "and/or" in line 3 of PCT 9
14	4, 9	US 14 contains the same limitations as PCT 9, except: • US includes the limitations of PCT 4 • US modifies numbers with "about" • US is not multiply dependent • US includes a limitation drawn to only the block copolymer limitations relating to "wet-elongation", i.e. those following the "and/or" in line 3 of PCT 9
15	4, 10	US 15 contains the same limitations as PCT 10, except: • US includes the limitations of PCT 4 • US is not multiply dependent **Re Observation VIII:** The observation alleges that PCT 10 is "open to" lacking "clarity in what concerns the reference to a method given herein". Applicants submit that it is clear that the "method given herein" refers to the method for measuring contact angle provided in the specification, namely a modified version of ASTM D5946-09. Applicants clearly identify this modified version as being the method for measuring contact angle and describe the adaptations made from the original method, all at page 28, lines 16-32, of the Specification.

Application No.: 13/169,113
Docket No.: CM3550
First Named Inventor: MC KIERNAN, Robin Lynn

Claims Correspondence Table

Claims in the US Application	Patentable Claims in the corresponding PCT Application	Explanation regarding the correspondence and Comments regarding Box VIII Observations (if any)
16	4, 11	US 16 contains the same limitations as PCT 11, except: • US includes the limitations of PCT 4 • US modifies numbers with "about" • US is not multiply dependent
17	12	US 17 contains the same limitations as PCT 12, except: • US is not multiply dependent
18	13	US 18 contains the same limitations as PCT 13
19	4, 14	US 19 contains the same limitations as PCT 14, except: • US includes the limitations of PCT 4
20	4, 15	US 20 contains the same limitations as PCT 15, except: • US includes the limitations of PCT 4
21	5	US 21 contains the same limitations as PCT 5; US is simply re-written in independent form

UNITED STATES PATENT AND TRADEMARK OFFICE

Commissioner for Patents
United States Patent and Trademark Office
P.O. Box 1450
Alexandria, VA 22313-1450
www.uspto.gov

THE PROCTER & GAMBLE COMPANY
GLOBAL LEGAL DEPARTMENT – IP
SYCAMORE BUILDING – 4TH FLOOR
299 EAST SIXTH STREET
CINCINNATI OH 45202

MAILED
JAN 3 1 2012
OFFICE OF PETITIONS

In re Application of
MCKIERNAN, et al
Application No.: 13/169,113
Filed: June 27, 2011
Attorney Docket No.: CM3550
For: SUBSTRATE COATED WITH A HYDROPHILIC ELASTOMER

: DECISION ON REQUEST TO
: PARTICIPATE IN THE PATENT
: PROSECUTION HIGHWAY
: PROGRAM AND PETITION
: TO MAKE SPECIAL UNDER
: 37 CFR 1.102(a)

This is a decision on the request to participate in the PCT Patent Prosecution Highway (PCT-PPH) pilot program and the petition under 37 CFR 1.102(a), filed on November 29, 2011, to make the above-identified application special.

The request and petition are **GRANTED**.

Discussion

A grantable request to participate in the PCT-PPH pilot program and petition to make special require:

(1) The U.S. application must have an eligible relationship to one or more PCT applications where the ISA or IPEA are the JPO, EPO, Australia, Austria, KIPO, NPI, Russia, Spain, Sweden, Finland, China or USPTO;

(2) At least one claim in the PCT application has novelty, inventive step, and industrial applicability and must be free of any observations in Box VIII in the latest work product in the international stage or applicant must identify and explain why the claim(s) is/are not subject to the observation in Box VIII;

(3) Applicant must submit a copy of the claim(s) from the PCT application(s) that have novelty, inventive step, and industrial applicability along with an English translation thereof and a statement that the English translation is accurate, if the claims are not in the English language;

(4) All the claims in the U.S. application must sufficiently correspond or be amended to sufficiently correspond to the claim(s) that have novelty, inventive step, and industrial applicability in the PCT application(s);

(5) Examination of the U.S. application has not begun;

(6) Applicant must submit a copy of the latest international work product from the PCT application indicating that the claim(s) have novelty, inventive step, and industrial applicability along with an English translation thereof and a statement that the English translation is accurate if the latest international work product is not in the English language;

(7) Applicant must submit an IDS listing the documents cited by the PCT examiner in the international work product along with copies of documents except U.S. patents or U.S. patent application publications.

The request to participate in the PPH pilot program and petition comply with the above requirements. Accordingly, the above-identified application has been accorded "special" status.

Inquiries concerning this decision should be directed to Diane Goodwyn at (571) 272-6735.

All other inquiries concerning the examination or status of the application is accessible in the PAIR system at http://www.uspto.gov/ebc.index.html.

This application is being forwarded to Technology Center Art Unit 3761 for action on the merits commensurate with this decision.

David Bucci
Petitions Examiner
Office of Petitions

UNITED STATES PATENT AND TRADEMARK OFFICE

Commissioner for Patents
United States Patent and Trademark Office
P.O. Box 1450
Alexandria, VA 22313-1450
www.uspto.gov

In re Application of
Paul George Rasmussen

Application No. 13169300

Filed:

Attorney Docket No. VINelectrochemNP

:DECISION ON PETITION TO MAKE SPECIAL
:UNDER 37 CFR 1.102(c)(1)

This is a decision on the electronic petition under 37 CFR 1.102 (c)(1), filed 27-JUN-2011 to make the above-identified application special based on applicant's age as set forth in MPEP § 708.02, Section IV.

The petition is **GRANTED**.

A grantable petition to make an application special under 37 CFR 1.102(c)(1), MPEP § 708.02, Section IV: Applicant's Age must include a statement by applicant or a registered practitioner having evidence that applicant is at least 65 years of age. No fee is required.

Accordingly, the above-identified application has been accorded "special" status and will be taken up for action by the examiner upon the completion of all pre-examination processing.

Telephone inquiries concerning this electronic decision should be directed to the Electronic Business Center at 866-217-9197.

All other inquiries concerning either the examination or status of the application should be directed to the Technology Center.

Doc code : PET.OP.AGE
Description : Petition to make special based on Age/Health

PTO/SB/130 (07-09)
Approved for use through 07/31/2012. OMB 0651- 0031
U.S. Patent and Trademark Office; U.S. DEPARTMENT OF COMMERCE
Under the Paperwork Reduction Act of 1995, no persons are required to respond to a collection of information unless it contains a valid OMB control number

PETITION TO MAKE SPECIAL BASED ON AGE FOR ADVANCEMENT OF EXAMINATION UNDER 37 CFR 1.102(c)(1)

Application Information

Application Number	13169300	Confirmation Number	1715	Filing Date	2011-06-27
Attorney Docket Number (optional)	VINelectrochemNP	Art Unit		Examiner	
First Named Inventor	Paul George Rasmussen				
Title of Invention	Electrical Storage Device Utilizing Pyrazine-Based Cyanoazacarbons and Polymers Derived Therefrom				

Attention: Office of Petitions
An application may be made special for advancement of examination upon filing of a petition showing that the applicant is 65 years of age, or more. No fee is required with such a petition. See 37 CFR 1.102(c)(1) and MPEP 708.02 (IV).

APPLICANT HEREBY PETITIONS TO MAKE SPECIAL FOR ADVANCEMENT OF EXAMINATION IN THIS APPLICATION UNDER 37 CFR 1.102(c)(1) and MPEP 708.02 (IV) ON THE BASIS OF THE APPLICANT'S AGE.

A grantable petition requires one of the following items:
(1) Statement by one named inventor in the application that he/she is 65 years of age, or more; or
(2) Certification by a registered attorney/agent having evidence such as a birth certificate, passport, driver's license, etc. showing one named inventor in the application is 65 years of age, or more.

Name of Inventor who is 65 years of age, or older

Given Name	Middle Name	Family Name	Suffix
Paul	George	Rasmussen	

A signature of the applicant or representative is required in accordance with 37 CFR 1.33 and 10.18.
Please see 37 CFR 1.4(d) for the format of the signature.

Select (1) or (2) :

○ (1) I am an inventor in this application and I am 65 years of age, or more.

● (2) I am an attorney or agent registered to practice before the Patent and Trademark Office, and I certify that I am in possession of evidence, and will retain such in the application file record, showing that the inventor listed above is 65 years of age, or more.

Signature	/Stanley Emil Jelic, Reg. No. 61394/	Date (YYYY-MM-DD)	2011-06-27
Name	Stanley Emil Jelic	Registration Number	61394

PTO/SB/130 (07-09)
Approved for use through 07/31/2012. OMB 0651- 0031
U.S. Patent and Trademark Office; U.S. DEPARTMENT OF COMMERCE
Under the Paperwork Reduction Act of 1995, no persons are required to respond to a collection of information unless it contains a valid OMB control number

Privacy Act Statement

The Privacy Act of 1974 (P.L. 93-579) requires that you be given certain information in connection with your submission of the attached form related to a patent application or patent. Accordingly, pursuant to the requirements of the Act, please be advised that: (1) the general authority for the collection of this information is 35 U.S.C. 2(b)(2); (2) furnishing of the information solicited is voluntary; and (3) the principal purpose for which the information is used by the U.S. Patent and Trademark Office is to process and/or examine your submission related to a patent application or patent. If you do not furnish the requested information, the U.S. Patent and Trademark Office may not be able to process and/or examine your submission, which may result in termination of proceedings or abandonment of the application or expiration of the patent.

The information provided by you in this form will be subject to the following routine uses:

1. The information on this form will be treated confidentially to the extent allowed under the Freedom of Information Act (5 U.S.C. 552) and the Privacy Act (5 U.S.C. 552a). Records from this system of records may be disclosed to the Department of Justice to determine whether the Fr eedom of Information Act requires disclosure of these records.

2. A record from this system of records may be disclosed, as a routine use, in the course of presenting evidence to a court, magistrate, or administrative tribunal, including disclosures to opposing counsel in the course of settlement negotiations.

3. A record in this system of records may be disclosed, as a routine use, to a Member of Congress submitting a request involving an individual, to whom the record pertains, when the individual has requested assistance from the Member with respect to the subject matter of the record.

4. A record in this system of records may be disclosed, as a routine use, to a contractor of the Agency having need for the information in order to perform a contract. Recipients of information shall be required to comply with the requirements of the Privacy Act of 1974, as amended, pursuant to 5 U.S.C. 552a(m).

5. A record related to an International Application filed under the Patent Cooperation Treaty in this system of records may be disclosed, as a routine use, to the International Bureau of the World Intellectual Property Organization, pursuant to the Patent Cooperation Treaty.

6. A record in this system of records may be disclosed, as a routine use, to another federal agency for purposes of National Security review (35 U.S.C. 181) and for review pursuant to the Atomic Energy Act (42 U.S.C. 218(c)).

7. A record from this system of records may be disclosed, as a routine use, to the Administrator, General Services, or his/her designee, during an inspection of records conducted by GSA as part of that agency's responsibility to recommend improvements in records management practices and programs, under authority of 44 U.S.C. 2904 and 2906. Such disclosure shall be made in accordance with the GSA regulations governing inspection of records for this purpose, and any other relevant (i.e., GSA or Commerce) directive. Such disclosure shall not be used to make determinations about indivi duals.

8. A record from this system of records may be disclosed, as a routine use, to the public after either publication of the application pursuant to 35 U.S.C. 122(b) or issuance of a patent pursuant to 35 U.S.C. 151. Further, a record may be disclosed, subject to the limitations of 37 CFR 1.14, as a routine use, to the public if the record was filed in an application which became abandoned or in which the proceedings were terminated and which application is referenced by either a published application, an application open to public inspections or an issued patent.

9. A record from this system of records may be disclosed, as a routine use, to a Federal, State, or local law enforcement agency, if the USPTO becomes aware of a violation or potential violation of law or regulation.

Doc Code: PET.AUTO Document Description: Petition automatically granted by EFS-Web	PTO/SB/140 U.S. Patent and Trademark Office Department of Commerce

Electronic Petition Request	**PETITION TO WITHDRAW AN APPLICATION FROM ISSUE AFTER PAYMENT OF THE ISSUE FEE UNDER 37 CFR 1.313(c)**
Application Number	13169483
Filing Date	27-Jun-2011
First Named Inventor	Hajime KIMURA
Art Unit	2624
Examiner Name	SATHYANARAYA PERUNGAVOOR
Attorney Docket Number	0756-9379
Title	DEFECTIVE PIXEL SPECIFYING METHOD, DEFECTIVE PIXEL SPECIFYING SYSTEM, IMAGE CORRECTING METHOD, AND IMAGE CORRECTING SYSTEM

An application may be withdrawn from issue for further action upon petition by the applicant. To request that the Office withdraw an application from issue, applicant must file a petition under this section including the fee set forth in § 1.17(h) and a showing of good and sufficient reasons why withdrawal of the application from issue is necessary.

APPLICANT HEREBY PETITIONS TO WITHDRAW THIS APPLICATION FROM ISSUE UNDER 37 CFR 1.313(c).

A grantable petition requires the following items:
(1) Petition fee; and
(2) One of the following reasons:
(a) Unpatentability of one or more claims, which must be accompanied by an unequivocal statement that one or more claims are unpatentable, an amendment to such claim or claims, and an explanation as to how the amendment causes such claim or claims to be patentable;
(b) Consideration of a request for continued examination in compliance with § 1.114 (for a utility or plant application only); or
(c) Express abandonment of the application. Such express abandonment may be in favor of a continuing application, but not a CPA under 37 CFR 1.53(d).

Petition Fee

☐ Applicant claims SMALL ENTITY status. See 37 CFR 1.27.

☐ Applicant is no longer claiming SMALL ENTITY status. See 37 CFR 1.27(g)(2).

☐ Applicant(s) status remains as SMALL ENTITY.

☒ Applicant(s) status remains as other than SMALL ENTITY

Reason for withdrawal from issue

○ One or more claims are unpatentable

◉ Consideration of a request for continued examination (RCE) (List of Required Documents and Fees)

○ Applicant hereby expressly abandons the instant application (any attorney/agent signing for this reason must have power of attorney pursuant to 37 CFR 1.32(b)).

RCE request,submission, and fee.

☐ I certify, in accordance with 37 CFR 1.4(d)(4) that : The RCE request ,submission, and fee have already been filed in the above-identified application on

☒ Are attached.

THIS PORTION MUST BE COMPLETED BY THE SIGNATORY OR SIGNATORIES

I certify, in accordance with 37 CFR 1.4(d)(4) that I am:

◉ An attorney or agent registered to practice before the Patent and Trademark Office who has been given power of attorney in this application.

○ An attorney or agent registered to practice before the Patent and Trademark Office, acting in a representative capacity.

○ A sole inventor

○ A joint inventor; I certify that I am authorized to sign this submission on behalf of all of the inventors

○ A joint inventor; all of whom are signing this e-petition

○ The assignee of record of the entire interest that has properly made itself of record pursuant to 37 CFR 3.71

Signature	/Eric J. Robinson/
Name	Eric J. Robinson
Registration Number	38285

UNITED STATES PATENT AND TRADEMARK OFFICE

Commissioner for Patents
United States Patent and Trademark Office
P.O. Box 1450
Alexandria, VA 22313-1450
www.uspto.gov

Decision Date : October 18,2011

In re Application of :

Hajime KIMURA

DECISION ON PETITION

UNDER CFR 1.313(c)(2)

Application No : 13169483

Filed : 27-Jun-2011

Attorney Docket No : 0756-9379

This is an electronic decision on the petition under 37 CFR 1.313(c)(2), filed October 18,2011 , to withdraw the above-identified application from issue after payment of the issue fee.

The petition is **GRANTED.**

The above-identified application is withdrawn from issue for consideration of a submission under 37 CFR 1.114 (request for continued examination). See 37 CFR 1.313(c)(2).

Petitioner is advised that the issue fee paid in this application cannot be refunded. If, however, this application is again allowed, petitioner may request that it be applied towards the issue fee required by the new Notice of Allowance.

Telephone inquiries concerning this decision should be directed to the Patent Electronic Business Center (EBC) at 866-217-9197.

This application file is being referred to Technology Center AU 2624 for processing of the request for continuing examination under 37 CFR 1.114 .

Office of Petitions

Doc Code: PET.GREEN
Document Description: Petition for Green Tech Pilot

PTO/SB/420 (03-11)

PETITION TO MAKE SPECIAL UNDER THE GREEN TECHNOLOGY PILOT PROGRAM

Attorney Docket Number: 9598-015	Application Number (if known): 13/169,487	Filing date: June 27, 2011

First Named Inventor: Gerardo Jose la O'

Title: Electrolyte Flow Configuration for a Metal-Halogen Flow Battery

APPLICANT HEREBY REQUESTS TO PARTICIPATE IN THE GREEN TECHNOLOGY PILOT PROGRAM FOR THE ABOVE-IDENTIFIED APPLICATION. See Instruction Sheet on page 2.

This petition must be timely filed electronically using the USPTO electronic filing system, EFS-Web.

1. By filing this petition:

   Applicant is requesting early publication: Applicant hereby requests early publication under 37 CFR 1.219 and the publication fee set forth in 37 CFR 1.18(d) accompanies this request.

2. By filing this petition: applicant is agreeing to make an election without traverse in a telephonic interview and elect an invention that meets the eligibility requirements for the Green Technology Pilot Program, if the Office determines that the claims are not obviously directed to a single invention. See Instruction Sheet.

3. This request is accompanied by statements of special status for the eligibility requirement.

4. The application contains no more than three (3) independent claims and twenty (20) total claims.

5. The application does not contain any multiple dependent claims.

6. Other attachments: Preliminary Amendment

Signature Martin Sulsky	Date November 8, 2011
Name (Print/Typed) Martin S. Sulsky	Registration Number 45,403

Note: Signatures of all the inventors or assignees of record of the entire interest or their representative(s) are required in accordance with 37 CFR 1.33 and 11.18. Please see 37 CFR 1.4(d) for the form of the signature. If necessary, submit multiple forms for more than one signature, see below.*

☐ *Total of_____ forms are submitted.

If you need assistance in completing the form, call 1-800-PTO-9199 and select option 2.

IN THE UNITED STATES PATENT AND TRADEMARK OFFICE

Docket No.: 9598-015

In re the Application of: Gerardo Jose la O'

Group Art Unit: 1726

Application No. 13/169,487

Examiner:

Filed: June 27, 2011

Confirmation No. 2050

For: Electrolyte Flow Configuration for a Metal-Halogen Flow Battery

STATEMENT REGARDING PUBLICATION OF APPLICATION AND THE ELGIBILITY REQUIREMENT

Mail Stop Petitions
Commissioner for Patents
PO Box 1450
Alexandria, VA 22313-1450

Sir:

This Statement is filed in conjunction with a Petition To Make Special Under The Green Technology Pilot Program.

The undersigned representative of the Applicants' states that the publication fee for the above listed application is being paid in conjunction with the filing of the Petition To Make Special Under The Green Technology Pilot Program.

The undersigned representative of the Applicants further states that the above listed application is entitled to special status under the Green Technology Pilot Program because the invention materially contributes to the development of renewable energy resources and energy conservation.

A favorable decision on the Petition To Make Special Under The Green Technology Pilot Program is earnestly solicited.

Respectfully submitted,

Date: November 8, 2011

By: _____

The Marbury Law Group PLLC
Customer Number: 22208
Telephone: 703-391-2900
Facsimile: 703-391-2901

Martin S. Sulsky, Esq.
Attorney for Applicants
Registration No. 45,403

UNITED STATES PATENT AND TRADEMARK OFFICE

UNITED STATES DEPARTMENT OF COMMERCE
United States Patent and Trademark Office
Address: COMMISSIONER FOR PATENTS
P.O. Box 1450
Alexandria, Virginia 22313-1450
www.uspto.gov

APPLICATION NO.	FILING DATE	FIRST NAMED INVENTOR	ATTORNEY DOCKET NO.	CONFIRMATION NO.
13/169,487	06/27/2011	Gerardo Jose la O'	9598-015	2050

22208 7590 11/18/2011
The Marbury Law Group, PLLC
11800 SUNRISE VALLEY DRIVE
SUITE 1000
RESTON, VA 20191

EXAMINER
THOMAS, BRENT C

ART UNIT	PAPER NUMBER
1726	

NOTIFICATION DATE	DELIVERY MODE
11/18/2011	ELECTRONIC

Please find below and/or attached an Office communication concerning this application or proceeding.

The time period for reply, if any, is set in the attached communication.

Notice of the Office communication was sent electronically on above-indicated "Notification Date" to the following e-mail address(es):

ptonotices@marburylaw.com

UNITED STATES PATENT AND TRADEMARK OFFICE

Commissioner for Patents
United States Patent and Trademark Office
P.O. Box 1450
Alexandria, VA 22313-1450
www.uspto.gov

The Marbury Law Group, PLLC
11800 SUNRISE VALLEY DRIVE
SUITE 1000
RESTON VA 20191

11/18/11

In re Application of	:	
La O'	:	DECISION ON PETITION
Application No. 13/169,487	:	TO MAKE SPECIAL UNDER
Filed: 6/27/2011	:	THE GREEN TECHNOLOGY
Attorney Docket No. **9598-015**	:	PILOT PROGRAM

This is a decision on the petition under 37 CFR 1.102, filed 11/8/2011, to make the above-identified application special under the pilot program for applications pertaining to Green Technologies as set forth in 74 Federal Register Notice 64666 (December 8, 2009) and amended by 75 Federal Register Notice 28554 (May 21, 2010) and 75 Federal Register Notice 69049 (November 10, 2010).

The petition is **GRANTED**.

A grantable petition to make an application special under 37 CFR 1.102 and the pilot program as set forth in 74 FR 64666 must be directed to a nonprovisional application filed under 35 USC 111(a) or be a national stage entry under 35 USC 371, exclusive of any reissue applications.

In order to qualify for special status, the following requirements must be met. 1) The application must have no more than 3 independent claims and no more than 20 total claims. 2) The application must not contain any multiple dependent claims. 3) The petition must state the basis for seeking special status, i.e., the claimed invention either: A) materially enhances the quality of the environment or B) materially contributes to: i) the discovery or development of renewable energy resources, ii) the more efficient utilization and conservation of energy resources, or iii) greenhouse gas emission reduction. 4) If the disclosure is not clear on its face that the claimed invention materially contributes under category (A) or (B), the petition must be accompanied by a statement by the applicant, assignee, or an attorney/agent registered to practice before the Office explaining how the materiality standard is met. 5) A statement that applicant will agree to make an election without traverse in a telephonic interview if a restriction requirement is made by the examiner. 6) The petition to make special must be filed electronically. 7) The petition must be filed at least one day prior to the date that a first Office Action appears in the Patent Application Information Retrieval (PAIR) system. 8) The petition must be accompanied by a

request for early publication in compliance with 37 CFR 1.219 and include the publication fee as set forth in 37 CFR 1.18(d).

The requirement for a fee for consideration of the petition to make special for applications pertaining to Green Technologies has been waived.

The instant petition complies with items 1 – 8 above. Accordingly, the above-identified application has been accorded "special" status.

Telephone inquires concerning this decision should be directed to Tom Dunn at 571-272-1171.

The application is being forwarded to the Technology Center Art Unit 1726 for action on the merits commensurate with this decision.

/Tom Dunn/

Tom Dunn
Quality Assurance Specialist
Technology Center 1700

UNITED STATES PATENT AND TRADEMARK OFFICE

Commissioner for Patents
United States Patent and Trademark Office
P.O. Box 1450
Alexandria, VA 22313-1450
www.uspto.gov

SCULLY SCOTT MURPHY & PRESSER, PC
400 GARDEN CITY PLAZA
SUITE 300
GARDEN CITY NY 11530

MAILED
FEB 13 2012
OFFICE OF PETITIONS

In re Application of
Misa Takahashi et al.
Application No.: 13/169,513
Filed: June 27, 2011
Attorney Docket No.: 27776Z
For: MEDICAL APPARATUS

: DECISION ON REQUEST TO
: PARTICIPATE IN THE PATENT
: PROSECUTION HIGHWAY
: PROGRAM AND PETITION
: TO MAKE SPECIAL UNDER
: 37 CFR 1.102(a)

This is a decision on the request to participate in the Patent Prosecution Highway (PPH) program and the petition under 37 CFR 1.102(a), filed October 19, 2011, to make the above-identified application special.

The request and petition are **DISMISSED**.

A grantable request to participate in the PPH program and petition to make special require:

1. The U.S. application must validly claim priority under 35 U.S.C. 119(a) to one or more applications filed in the JPO, note where the JPO application with similar claims is not the same application from which the U.S. application claims priority then the applicant must identify the relationship between the JPO application with similar claims and the JPO priority application;

2. Applicant must submit a copy of:
   a. The allowable/patentable claim(s) from the JPO application(s) or if a copy of the allowable/patentable claims is available via the Dossier Access System (DAS) applicant may request the USPTO obtain a copy from the DAS, however if the USPTO is unable to obtain a copy from the DAS the applicant will be required to submit a copy;
   b. An English translation of the allowable/patentable claim(s) and
   c. A statement that the English translation is accurate;

3. Applicant must
   a. Ensure all the claims in the U.S. application must sufficiently correspond or be amended to sufficiently correspond to the allowable/patentable claim(s) in the JPO application(s) and
   b. Submit a claims correspondence table in English;

4. Examination of the U.S. application has not begun;

5. Applicant must submit:
    a. Documentation of prior office action:
        i. a copy of the office action(s) just prior to the "Decision to Grant a Patent" from each of the JPO application(s) containing the allowable/patentable claim(s) or
        ii. if the allowable/patentable claims(s) are from a "Notification of Reasons for Refusal" then the Notification of Reasons for Refusal or
        iii. if the JPO application is a first action allowance then no office action from the JPO is necessary should be indicated on the request/petition form;

    Further, if a copy of the documents from a or b above is available via the Dossier Access System (DAS) applicant may request the USPTO obtain a copy from the DAS, however if the USPTO is unable to obtain a copy from the DAS the applicant will be required to submit a copy;
    b. An English language translation of the JPO Office action from (5)(a)(i)-(ii) above
    c. A statement that the English translation is accurate;

6. Applicant must submit:
    a. An IDS listing the documents cited by the JPO examiner in the JPO office action (unless already submitted in this application)
    b. Copies of the documents except U.S. patents or U.S. patent application publications (unless already submitted in this application);

Conditions (1-4) above are considered to have been met. However, the request to participate in the PPH pilot program and petition fails meet conditions (5) and (6).

Regarding the requirement of condition (5), applicant has failed to submit a Japanese language copy of the office action and a statement that the translation is accurate.

Regarding the requirement of condition (6), applicant has failed to submit copies of the references cited in the JP office action.

Applicant is given **ONE** opportunity within a time period of **ONE MONTH or THIRTY DAYS**, whichever is longer, from the mailing date of this decision to correct the deficiencies. **NO EXTENSION OF TIME UNDER 37 CFR 1.136 IS PERMITTED.** If the deficiencies are not corrected with the time period given, the application will await action in its regular turn. Response must be filed via the Electronic Filing System (EFS) using the document description: Petition to make special under Patent Pros Hwy. Any preliminary amendments and IDS submitted with the PPH documents must be separately indexed as a preliminary amendment and IDS, respectively.

Telephone inquiries concerning this decision should be directed to Irvin Dingle at 571-272-3210.

All other inquiries concerning the examination or status of the application is accessible in the PAIR system at http://www.uspto.gov/ebc/index.html.

David Bucci
Petitions Examiner
Office of Petitions

UNITED STATES PATENT AND TRADEMARK OFFICE

Commissioner for Patents
United States Patent and Trademark Office
P.O. Box 1450
Alexandria, VA 22313-1450
www.uspto.gov

SCULLY SCOTT MURPHY & PRESSER, PC
400 GARDEN CITY PLAZA
SUITE 300
GARDEN CITY NY 11530

MAILED

APR 04 2012

OFFICE OF PETITIONS

In re Application of	**: DECISION ON REQUEST TO**
Misa Takahashi, et al	**: PARTICIPATE IN THE PATENT**
Application No.: 13/169,513	**: PROSECUTION HIGHWAY**
Filed: June 27, 2011	**: PROGRAM AND PETITION**
Attorney Docket No.: 27776Z	**: TO MAKE SPECIAL UNDER**
For: MEDICAL APPARATUS	**: 37 CFR 1.102(a)**

This is a decision on the request to participate in the Patent Prosecution Highway (PPH) program and the petition under 37 CFR 1.102(a), filed October 19, 2011 and renewed on March 5, 2012, to make the above-identified application special.

The request and petition are **GRANTED**.

DISCUSSION

A grantable request to participate in the PPH pilot program and petition to make special require:

1. The U.S. application is
    a. a Paris Convention application which either
        i. validly claims priority under 35 U.S.C. 119(a) and 37 CFR 1.55 to one or more applications filed in the JPO, or
        ii. validly claims priority to a PCT application that contains no priority claims, or
    b. a national stage application under the PCT (an application which entered the national stage in the U.S. from a PCT international application after compliance with 35 U.S.C. 371), which PCT application
        i. validly claims priority to an application filed in the JPO, or
        ii. validly claims priority to a PCT application that contains no priority claims, or
        iii. contains no priority claim, or
    c. a so-called bypass application filed under 35 U.S.C. 111(a) which validly claims benefit under 35 U.S.C. 120 to a PCT application, which PCT application

i. validly claims priority to an application filed in the JPO, or
ii. validly claims priority to a PCT application that contains no priority claims, or
iii. contains no priority claim;

2. Applicant must:
   a. Ensure all the claims in the U.S. application must sufficiently correspond or be amended to sufficiently correspond to the allowable/patentable claim(s) in the JPO application(s) and
   b. Submit a claims correspondence table in English;
3. Examination of the U.S. application has not begun;
4. Applicant must submit:
   a. Documentation of prior office action:
      i. a copy of the office action(s) just prior to the "Decision to Grant a Patent" from each of the JPO application(s) containing the allowable/patentable claim(s) or
      ii. if the allowable/patentable claims(s) are from a "Notification of Reasons for Refusal" then the Notification of Reasons for Refusal or
      iii. if the JPO application is a first action allowance then no office action from the JPO is necessary should be indicated on the request/petition form;
   b. An English language translation of the JPO Office action from (5)(a)(i)-(ii) above
5. Applicant must submit:
   a. An IDS listing the documents cited by the JPO examiner in the JPO office action (unless already submitted in this application)
   b. Copies of the documents except U.S. patents or U.S. patent application publications (unless already submitted in this application);

The request to participate in the PPH pilot program and petition comply with the above requirements. Accordingly, the above-identified application has been accorded "special" status.

Telephone inquiries concerning this decision should be directed to Irvin Dingle at (571) 272-3210.

All other inquiries concerning the examination or status of the application is accessible in the PAIR system at http://www.uspto.gov/ebc.index.html.

This application will be forwarded to the examiner for action on the merits commensurate with this decision once this application's formality reviews have been completed.

/SDB/

Sherry D. Brinkley
Petitions Examiner
Office of Petitions

UNITED STATES PATENT AND TRADEMARK OFFICE

UNITED STATES DEPARTMENT OF COMMERCE
United States Patent and Trademark Office
Address: COMMISSIONER FOR PATENTS
P.O. Box 1450
Alexandria, Virginia 22313-1450
www.uspto.gov

APPLICATION NO.	FILING DATE	FIRST NAMED INVENTOR	ATTORNEY DOCKET NO.	CONFIRMATION NO.
13/169,619	06/27/2011	Wenfu WU	HW708564	2286

77399 7590 07/20/2011
Leydig, Voit & Mayer, Ltd
(for Huawei Technologies Co., Ltd)
Two Prudential Plaza Suite 4900
180 North Stetson Avenue
Chicago, IL 60601

EXAMINER

ART UNIT	PAPER NUMBER
2617	

NOTIFICATION DATE	DELIVERY MODE
07/20/2011	ELECTRONIC

Please find below and/or attached an Office communication concerning this application or proceeding.

The time period for reply, if any, is set in the attached communication.

Notice of the Office communication was sent electronically on above-indicated "Notification Date" to the following e-mail address(es):

Chgpatent@leydig.com
uspatent@huawei.com

UNITED STATES PATENT AND TRADEMARK OFFICE

Commissioner for Patents
United States Patent and Trademark Office
P.O. Box 1450
Alexandria, VA 22313-1450
www.uspto.gov

Leydig, Voit & Mayer, Ltd
(for Huawei Technologies Co., Ltd)
Two Prudential Plaza Suite 4900
180 North Stetson Avenue
Chicago IL 60601

In re Application of:
WU, WENFU, et al.
Serial No.: 13/169,619
Filed: June 27, 2011

Title: **METHOD, SYSTEM, AND DEVICE FOR USER DETACHMENT WHEN A HANDOVER OR CHANGE OCCURS IN HETEROGENEOUS NETWORK**

DECISION ON PETITION TO MAKE SPECIAL FOR NEW APPLICATION UNDER 37 C.F.R. § 1.102 & M.P.E.P. § 708.02

The petition to make the application special filed June 27, 2011 is **GRANTED**.

The application is eligible for accelerated examination and the petition complies with the conditions for granting the application special status pursuant to the "Change to Practice for Petitions in Patent Applications to Make Special and for Accelerated Examination" published June 26, 2006, in the Federal Register. (71 Fed. Reg. 36323).

The prosecution of the instant application will be conducted expeditiously according to the following guidelines.

1. The application will be docketed to an examiner and taken up for action within two weeks of the date of this decision.

2. Restriction Practice:
   If the examiner determines that the claims are not directed to a single invention, a telephone request to elect one single invention will be made pursuant to MPEP 812.01. As a prerequisite to the grant of this petition, the applicant has agreed to make an oral election, by telephone, without traverse. If the applicant refuses to make an election without traverse, or the examiner cannot reach the applicant after a reasonable effort, the

examiner will treat the first claimed invention (invention defined by claim 1) as having being constructively elected without traverse for examination.

3. Office action:
If it is determined that, after appropriate consultation, there is a potential rejection or any other issue to be addressed, the examiner will telephone the applicant and arrange an interview to discuss and resolve the issue. An Office action, other than a Notice of Allowance and Fee(s) Due (Notice of Allowance), will not be issued unless either: 1) an interview was conducted but did not result in agreed to action that places the application in condition for allowance, or, 2) a determination is made that an interview would be unlikely to result in the application being placed in condition for allowance, and 3) an internal conference has been held to review any rejection of any claim.

4. Time for Reply:
An Office action other than a Notice of Allowance or a final Office action will set a shortened statutory period of one month or thirty days, whichever is longer, for reply with no extension of time available under 37 CFR 1.136(a). Failure to timely file a reply within this non-extendible period for reply will result in the abandonment of the application.

5. Reply by Applicant:
A timely reply to an Office action other than the Notice of Allowance must be submitted electronically via EFS or EFS-web and limited to addressing the rejections, objections and requirement made. Any amendment that attempts to: 1) add claims which would result in more than three pending independent claims or more than twenty pending total claims; 2) present claims not encompassed by the pre-examination search or an updated accelerated examination support document; or 3) present claims that are directed a non-elected invention or an invention other than that previously claimed and examined in the application, will be treated as not fully responsive and will not be entered.

   For any amendment to the claims (including any new claim) that is not encompassed by the accelerated examination support document, applicant must provide an updated accelerated examination support document that encompasses the amended or new claims at the time of filing of the amendment.

   To proceed expeditiously with the examination, it is recommended that a reply with amendments made to any claim or with any new claim being added be accompanied by an updated accelerated examination support document or a statement explaining how the amended or new claim is supported by the original accelerated examination support document.

6. Information Disclosure Statement (IDS):
Any IDS filed during prosecution must be submitted electronically via EFS or EFS-web, accompanied by an updated accelerated examination support document, and be in compliance with 37 CFR 1.97 and 1.98.

7. Post-Allowance Processing:
   To expedite processing of the allowed application into a patent, the applicant must: 1) pay the required fees within one month of the date of the Notice of Allowance, and 2) not file any post allowance papers not required by the Office. In no event may the issue fee be paid and accepted later than three months from the date of the Notice of Allowance.

8. After-Final and Appeal Procedures:
   To expedite prosecution, after receiving the final Office action, applicant must: 1) promptly file a notice of appeal, an appeal brief and appeal fees; and 2) not request a pre-appeal brief conference.

   Any amendment, affidavit or other evidence filed after final Office action must comply with applicable rules and the requirements outlined in numbered paragraphs 5 and 6 above.

   On appeal, the application will proceed according to normal appeal procedures. After appeal, the application will again be treated special.

9. Proceedings Outside the Normal Examination Process:
   If the application becomes involved in a proceeding that is outside the normal examination process (e.g., a secrecy order, national security review, interference proceeding, petitions under 37 CFR 1.181, 182 or 183), the application will be treated special before and after such proceeding.

10. Final Disposition:
    The twelve month goal of this accelerated examination procedure ends with a final disposition. The mailing of a final Office action, a Notice of Allowance, the filing of a Notice of Appeal, or the filing of a Request for Continued Examination (RCE) is the final disposition.

If, during prosecution, a paper is not filed electronically using EFS-web, a reply is filed but is not fully responsive, the application is involved in an appeal, or a proceeding outside normal examination process, the application will still be examined expeditiously, however, the final disposition may occur more than twelve months from the filing of the application.

Any inquiry regarding this decision should be directed to Ken Wieder, Quality Assurance Specialist, at (571) 272-2986.

/Kenneth A. Wieder/

Kenneth A. Wieder
Quality Assurance Specialist
Technology Center 2600
Communications

UNITED STATES PATENT AND TRADEMARK OFFICE

Commissioner for Patents
United States Patent and Trademark Office
P.O. Box 1450
Alexandria, VA 22313-1450
www.uspto.gov

MCANDREWS HELD & MALLOY, LTD
500 WEST MADISON STREET
SUITE 3400
CHICAGO IL 60661

MAILED
JUL 15 2011
OFFICE OF PETITIONS

In re Application of	:	
John T. Felts et. al	:	
Application No. 13/169,811	:	DECISION ON PETITION
Filed: June 27, 2011	:	TO MAKE SPECIAL UNDER
Attorney Docket No. 20675US24	:	37 CFR 1.102(c)(1)
	:	

This is a decision on the petition under 37 CFR 1.102(c)(1), filed June 27, 2011, to make the above-identified application special based on applicant's age as set forth in M.P.E.P. § 708.02, Section IV.

The petition is **GRANTED**.

A grantable petition to make an application special under 37 CFR 1.102(c)(1) and MPEP § 708.02, Section IV: Applicant's Age must be accompanied by evidence showing that at least one of the applicants is 65 years of age, or more, such as a birth certificate or a statement by applicant. No fee is required

The instant petition includes a statement by an attorney on behalf of inventor Robert S. Abrams attesting to his/her age. The above-identified application has been accorded "special" status.

Telephone inquiries concerning this decision should be directed to Kimberly Inabinet at 571-272-4618.

All other inquiries concerning either the examination or status of the application should be directed to the Technology Center.

Upon completion of the pre-examination processing by the Office of Patent Application Processing, this application will be referred to Technology Center 3736 for action on the merits commensurate with this decision.

/Kimberly Inabinet/

Kimberly Inabinet
Petitions Examiner
Office of Petitions

UNITED STATES PATENT AND TRADEMARK OFFICE

Commissioner for Patents
United States Patent and Trademark Office
P.O. Box 1450
Alexandria, VA 22313-1450
www.uspto.gov

FOLEY & LARDNER LLP
321 NORTH CLARK STREET
SUITE 2800
CHICAGO IL 60654-5313

MAILED

AUG 1 1 2011

OFFICE OF PETITIONS

In re Application of
Malackowski, et al.
Application No. 13/169,943
Filed/Deposited: 27 June, 2011
Attorney Docket No. 090068-0115

DECISION ON PETITION

This is a decision on the petition filed on 1 August, 2011, pursuant to 37 C.F.R. §1.47.

The petition as considered pursuant to 37 C.F.R. §1.47(a) is **GRANTED**.

A grantable petition pursuant to 37 C.F.R. §1.47(a) requires: (1) petition and fee; (2) proof that the non-signing inventor cannot be reached or refuses to sign the oath or declaration after having been presented with the application papers (specification: description, claims and drawings); (3) an acceptable oath or declaration in compliance with 35 U.S.C. §§ 115 and 116; and (4) a statement of the last known address of the non-signing inventor(s)—with diligence in the effort to ascertain the validity of the address set forth as the reasonably believed to be last known/current/valid address.

Petitioners always are reminded that for transmission by Email of any document to be accepted by the Office, written acknowledgment of receipt and readability of the message and all applicable attachments of required materials must be provided.

BACKGROUND

The record reflects as follows:

The application was deposited on 27 June, 2011, without, *inter alia*, a fully executed oath/declaration.

On 11 July, 2011, the Office mailed a Notice of Missing Parts requiring, inter alia, a fully-executed oath/declaration.

On 1 August, 2011, Petitioner Scott R. Kaspar (Reg. No. 54,583) filed, *inter alia*, a petition pursuant to the regulations at 37 C.F.R. §1.47, with an oath/declaration executed by co-inventors Malackhowski and Lutzker for themselves and on behalf of non-signing co-inventor Michael Lasinski (Mr. Lasinski), with a statement by Petitioner of postal transmittal (with copies of supporting transmittal documents) of the entire application (description, claims, abstract drawings) to a valid/current/reasonably believed to be last known mailing address for the non-signing inventor, who thereafter constructively refused to sign/join. Therefore, it appears that Petitioner provided a showing satisfying the requirements under the Rule to wit: showing/proof that the non-signing inventor actually and/or constructively refused to sign the oath or declaration after having been presented with the application papers (specification: description, claims and drawings); an acceptable oath or declaration in compliance with 35 U.S.C. §§ 115 and 116; and a statement of the last known address of the non-signing inventor(s)—with diligence in the effort to ascertain the validity of the address set forth as the reasonably believed to be last known/current/valid address. Thus, Petitioner sought to satisfy the requirements pursuant to the Rule and the guidance in the Commentary at MPEP §409.03, and §409.03(a) et seq.), and provide a showing that the non-signing inventor could not be found/refused to sign after diligent effort.

The availability of applications and application papers online to applicants/practitioners who diligently associate their Customer Number with the respective application(s) now provides an applicant/practitioner on-demand information as to events/transactions in an application.

Out of an abundance of caution, Petitioners always are reminded that those registered to practice and all others who make representations before the Office **must** inquire into the underlying facts of representations made to the Office and support averments with the appropriate documentation–since all owe to the Office the continuing duty to disclose.[1]

CONCLUSION

The instant petition under 37 C.F.R. §1.47(a) is **granted** (status is accorded pursuant to 37 C.F.R. §1.47(a).)

As provided in 37 C.F.R. §1.47(c), this Office will forward notice of this application's filing to the non-signing inventors at the addresses given in the petition. Notice of the filing of this application will also be published in the Official Gazette.

---

[1] See supplement of 17 June, 1999. The Patent and Trademark Office is relying on petitioner's duty of candor and good faith and accepting a statement made by Petitioner. See Changes to Patent Practice and Procedure, 62 Fed. Reg. at 53160 and 53178, 1203 Off. Gaz. Pat. Office at 88 and 103 (responses to comments 64 and 109)(applicant obligated under 37 C.F.R. §11.18, formerly §10.18 to inquire into the underlying facts and circumstances when providing statements to the Patent and Trademark Office).

Application No. 13/169,943

The instant application is released to the Office of Patent Application Processing (OPAP) for such processing as required in due course.

Telephone inquiries regarding this decision may be directed to the undersigned at (571) 272-3214—it is noted, however, that all practice before the Office is in writing (see: 37 C.F.R. §1.2[2]) and the proper authority for action on any matter in this regard are the statutes (35 U.S.C.), regulations (37 C.F.R.) and the commentary on policy (MPEP). Therefore, no telephone discussion may be controlling or considered authority for Petitioner's action(s).

/John J. Gillon, Jr./
John J. Gillon, Jr.
Senior Attorney
Office of Petitions

[2] The regulations at 37 C.F.R. §1.2 provide:

§1.2 Business to be transacted in writing.

All business with the Patent and Trademark Office should be transacted in writing. The personal attendance of applicants or their attorneys or agents at the Patent and Trademark Office is unnecessary. The action of the Patent and Trademark Office will be based exclusively on the written record in the Office. No attention will be paid to any alleged oral promise, stipulation, or understanding in relation to which there is disagreement or doubt

UNITED STATES PATENT AND TRADEMARK OFFICE

Commissioner for Patents
United States Patent and Trademark Office
P.O. Box 1450
Alexandria, VA 22313-1450
www.uspto.gov

MICHAEL J. LASINSKI
4977 ST. ANNE'S COURT
ANN ARBOR, MI 48103

MAILED

AUG 1 1 2011

OFFICE OF PETITIONS

In re Application of
Malackowski, et al.
Application No. 13/169,943
Filed/Deposited: 27 June, 2011
Attorney Docket No. 090068-0115

COMMUNICATION

Dear Michael J. Lasinski:

You are named as an inventor in the above-identified United States patent application, filed under the provisions of 35 U.S.C. §116 (United States Code), and 37 C.F.R. §1.47 (Code of Federal Regulations), Rules of Practice in Patent Cases. Should a patent be granted on the application you will be designated therein as an inventor.

As a named inventor you are entitled to inspect any paper in the file wrapper of the application, order copies of all or any part thereof (at a prepaid cost per 37 C.F.R. §1.19) or make your position of record in the application. Alternatively, you may arrange to do any of the preceding through a registered patent attorney or agent presenting written authorization from you. If you care to join the application, counsel of record (see below) would presumably assist you. Joining the application would entail the filing of an appropriate oath or declaration by you pursuant to 37 C.F.R. §1.63.

Should you elect to join in the application, the contact information for Counsel of Record is set forth at the end of this Communication.

Should you seek to identify independent Counsel, you may find the Patent Attorneys/Agents Search engine of assistance (https://oedci.uspto.gov/OEDCI/).

Requests for information regarding your application should be directed to the File Information Unit at (703) 308-2733. Information regarding how to pay for and order a copy of the application, or a specific paper in the application, should be directed to the Certification Division at (571) 272-3150 or 1 (800) 972-6382 (outside the Washington, DC area).

Telephone inquiries regarding this communication may be directed to the undersigned at (571) 272-3214—it is noted, however, that all practice before the Office is in writing (see: 37 C.F.R. §1.2[1]) and the proper authority for action on any matter in this regard are the statutes (35 U.S.C.), regulations (37 C.F.R.) and the commentary on policy (MPEP). Therefore, no telephone discussion may be controlling or considered authority for Petitioner's/your action(s) and/or inactions. Moreover, the Office can neither advise you nor recommend Counsel in this matter.

/John J. Gillon, Jr./
John J. Gillon, Jr.
Senior Attorney
Office of Petitions

Counsel of Record:
FOLEY & LARDNER LLP
321 NORTH CLARK STREET
SUITE 2800
CHICAGO IL 60654-5313

[1] The regulations at 37 C.F.R. §1.2 provide:
§1.2 Business to be transacted in writing.
All business with the Patent and Trademark Office should be transacted in writing. The personal attendance of applicants or their attorneys or agents at the Patent and Trademark Office is unnecessary. The action of the Patent and Trademark Office will be based exclusively on the written record in the Office. No attention will be paid to any alleged oral promise, stipulation, or understanding in relation to which there is disagreement or doubt

UNITED STATES PATENT AND TRADEMARK OFFICE

Commissioner for Patents
United States Patent and Trademark Office
P.O. Box 1450
Alexandria, VA 22313-1450
www.uspto.gov

POLSINELLI SHUGHART PC
700 WEST 47TH STREET
SUITE 1000
KANSAS CITY MO 64112

MAILED
SEP 12 2011
OFFICE OF PETITIONS

In re Application of	:	
MCCORMACK, et al	:	
Application No. 13/170,112	:	DECISION ON PETITION
Filed: June 27, 2011	:	TO MAKE SPECIAL UNDER
Attorney Docket No. 066093-428053	:	37 CFR 1.102(c)(1)
	:	

This is a decision on the petition under 37 CFR 1.102(c)(1), filed August 23, 2011, to make the above-identified application special based on applicant's age as set forth in M.P.E.P. § 708.02, Section IV.

The petition is **GRANTED**.

A grantable petition to make an application special under 37 CFR 1.102(c)(1) and MPEP § 708.02, Section IV: Applicant's Age must be accompanied by evidence showing that at least one of the applicants is 65 years of age, or more, such as a birth certificate or a statement by applicant. No fee is required

The instant petition includes a statement by applicant Edward Fletcher Eyster. Accordingly, the above-identified application has been accorded "special" status.

Telephone inquiries concerning this decision should be directed to the undersigned at (571) 272-6735.

All other inquiries concerning either the examination or status of the application should be directed to the Technology Center at (571) 272-3700.

The application is being forwarded to Technology Center Art Unit 3731 for action on the merits commensurate with this decision.

/Diane C. Goodwyn/
Diane C. Goodwyn
Petitions Examiner
Office of Petitions

UNITED STATES PATENT AND TRADEMARK OFFICE

Commissioner for Patents
United States Patent and Trademark Office
P.O. Box 1450
Alexandria, VA 22313-1450
www.uspto.gov

MAILED

JAN 26 2012

OFFICE OF PETITIONS

JONES DAY
222 EAST 41ST ST
NEW YORK, NY 10017

Applicants: Gosselin, et al.
Appl. No.: 13/170,118
Filing Date: June 27, 2011
Title: BETA-L-2'-DEOXY-NUCLEOSIDES FOR THE TREATMENT OF HEPATITIS B
Attorney Docket No.: 11874-263-999
Pub. No.: US 2011/0257120 A1
Pub. Date: October 20, 2011

This is a decision on the request for a corrected patent application publication under 37 CFR 1.221(b), received on December 16, 2011, for the above-identified application.

The request is DISMISSED.

Applicant requests that the application be republished because the patent application publication contains several Office mistakes in the specification.

37 CFR 1.221 (b) is applicable "only when the Office makes a material mistake which is apparent from Office records.... Any request for a corrected publication or revised patent application publication other than provided as provided in paragraph (a) of this section must be filed within two months from the date of the patent application publication. This period is not extendable." A material mistake must affect the public's ability to appreciate the technical disclosure of the patent application publication, to determine the scope of the patent application publication, or to determine the scope of the provisional rights that an applicant may seek to enforce upon issuance of a patent. [1]

The errors due to faulty optical character recognition are, in this case, not Office error. The errors are due to the quality of the text, which makes it difficult to electronically reproduce by digital imaging and optical character recognition. See 37 CFR 1.52(a)(1)(v), which states that all papers that are to become a permanent part of Office records must be presented "in a form having sufficient clarity and contrast between the paper and the writing to permit...electronic

[1] Changes to Implement Eighteen-Month Publication of Patent Applications, 65 FR 57023, 57038 (Sept. 20, 2000), 1239, Off. Gaz. Pat. Office Notices 63, 75 (Oct. 10, 2000) (final rule).

capture by use of digital imaging and optical character recognition." As set form at MPEP 1121, "applications with poor quality text, which may be acceptable for scanning and examination purposes, may lead to errors in the patent application publication. Correction of these errors and inclusion of any desired amendments into the text of the originally-filed specification and drawings will only occur if applicant files a request for republication under 37 CFR 1.221.(a). They will not be corrected by the Office in a corrected publication under 37 CFR 1.221(b).

Moreover, the errors are not material since they do not affect the public's ability to appreciate the technical disclosure of the patent application publication, to determine the scope of the patent application publication, or to determine the scope of the provisional rights that an applicant may seek to enforce upon issuance of a patent.

The applicant is advised that a "request for republication of an application previously published" may be filed under 37 CFR 1.221(a). Such a request for republication "must include a copy of the application compliance with the Office's electronic filing system requirements and be accompanied by the publication fee set forth in § 1.18(d) and the processing fee set forth in § 1.17(i)." If the request for republication does not comply with the electronic filing system requirements, the republication will not take place and the publication fee set forth in § 1.18(d) will be refunded. The processing fee will be retained.

A guide for filing a request for a Pre-Grant Publication, such as a request for republication, may be found on the link below:

http://www.uspto.gov/patents/process/file/efs/guidance/index.jsp

http://www.uspto.gov/ebc/portal/efs/pgpub_quickstart.pdf

Any request for republication under 37 CFR 1.221(a), must be submitted via the EFS system, as a "Pre-Grant Publication".

Inquiries relating to this matter may be directed to Sherry D. Brinkley at (571) 272-3204.

/Christopher Bottorff/

Christopher Bottorff
Petitions Examiner
Office of Petitions

UNITED STATES PATENT AND TRADEMARK OFFICE

Commissioner for Patents
United States Patent and Trademark Office
P.O. Box 1450
Alexandria, VA 22313-1450
www.uspto.gov

HARVEY LUNENFELD
8 PATRICIAN DRIVE
E. NORTHPORT NY 11731

MAILED

JUL 14 2011

OFFICE OF PETITIONS

In re Application of	:	
Harvey Lunenfeld	:	
Application No. 13/170,125	:	DECISION ON PETITION
Filed: June 27, 2011	:	TO MAKE SPECIAL UNDER
Attorney Docket No. Metasearch Queries Order	:	37 CFR 1.102(c)(1)
	:	

This is a decision on the petition under 37 CFR 1.102(c)(1), filed June 27, 2011, to make the above-identified application special based on applicant's age as set forth in M.P.E.P. § 708.02, Section IV.

The petition is **GRANTED**.

A grantable petition to make an application special under 37 CFR 1.102(c)(1) and MPEP § 708.02, Section IV: Applicant's Age must be accompanied by evidence showing that at least one of the applicants is 65 years of age, or more, such as a birth certificate or a statement by applicant. No fee is required

The instant petition includes a statement that inventor Harvey Lunenfeld is at least 65 years of age or older. The above-identified application has been accorded "special" status.

Telephone inquiries concerning this decision should be directed to Kimberly Inabinet at 571-272-4618.

All other inquiries concerning either the examination or status of the application should be directed to the Technology Center.

Upon completion of the pre-examination processing by the Office of Patent Application Processing, this application will be referred to Technology Center 2447 for action on the merits commensurate with this decision.

/Kimberly Inabinet/

Kimberly Inabinet
Petitions Examiner
Office of Petitions

UNITED STATES PATENT AND TRADEMARK OFFICE

Commissioner for Patents
United States Patent and Trademark Office
P.O. Box 1450
Alexandria, VA 22313-1450
www.uspto.gov

NORTH AMERICA INTELLECTUAL PROPERTY CORPORATION
P.O. BOX 506
MERRIFIELD VA 22116

MAILED
MAR 16 2012
OFFICE OF PETITIONS

In re Application of :
Staszewski and Wang :
Application No. 13/170,197 :
Filed: 06/28/2011 :
Attorney Docket No. MTKP1193USA :

DECISION ON PETITION

This is a decision on the petition under 37 CFR 1.182, filed February 9, 2012, to change the order of the names of the inventors.

The petition is **GRANTED**.

The Office of Petitions has changed the order of the names of the inventors in the USPTO computer records and printed a new bibliographic data sheet, which will be scanned into the Image File Wrapper. A corrected filing receipt, reflecting the requested change, accompanies this decision.

The application is being forwarded to Technology Center 2816 for examination in due course.

Telephone inquiries concerning this decision may be directed to the undersigned at (571) 272-3211.

Christina Tartera Donnell

Christina Tartera Donnell
Senior Petitions Attorney
Office of Petitions

Enclosure: Corrected Filing Receipt

UNITED STATES PATENT AND TRADEMARK OFFICE

UNITED STATES DEPARTMENT OF COMMERCE
United States Patent and Trademark Office
Address: COMMISSIONER FOR PATENTS
P.O. Box 1450
Alexandria, Virginia 22313-1450
www.uspto.gov

APPLICATION NUMBER	FILING or 371(c) DATE	GRP ART UNIT	FIL FEE REC'D	ATTY.DOCKET.NO	TOT CLAIMS	IND CLAIMS
13/170,197	06/28/2011	2816	1830	MTKP1193USA	30	4

CONFIRMATION NO. 3331

CORRECTED FILING RECEIPT

27765
NORTH AMERICA INTELLECTUAL PROPERTY CORPORATION
P.O. BOX 506
MERRIFIELD, VA 22116

OC000000053138761

Date Mailed: 03/15/2012

Receipt is acknowledged of this non-provisional patent application. The application will be taken up for examination in due course. Applicant will be notified as to the results of the examination. Any correspondence concerning the application must include the following identification information: the U.S. APPLICATION NUMBER, FILING DATE, NAME OF APPLICANT, and TITLE OF INVENTION. Fees transmitted by check or draft are subject to collection. Please verify the accuracy of the data presented on this receipt. **If an error is noted on this Filing Receipt, please submit a written request for a Filing Receipt Correction. Please provide a copy of this Filing Receipt with the changes noted thereon. If you received a "Notice to File Missing Parts" for this application, please submit any corrections to this Filing Receipt with your reply to the Notice. When the USPTO processes the reply to the Notice, the USPTO will generate another Filing Receipt incorporating the requested corrections**

Applicant(s)

Robert Bogdan Staszewski, Delft, NETHERLANDS;
Chi-Hsueh Wang, Kaohsiung City, TAIWAN;

Power of Attorney: The patent practitioners associated with Customer Number 27765

Domestic Priority data as claimed by applicant

This appln claims benefit of 61/368,015 07/27/2010

Foreign Applications (You may be eligible to benefit from the **Patent Prosecution Highway** program at the USPTO. Please see http://www.uspto.gov for more information.)

Permission to Access - A proper **Authorization to Permit Access to Application by Participating Offices** (PTO/SB/39 or its equivalent) has been received by the USPTO.

If Required, Foreign Filing License Granted: 07/08/2011

The country code and number of your priority application, to be used for filing abroad under the Paris Convention, is **US 13/170,197**

Projected Publication Date: Not Applicable

Non-Publication Request: No

Early Publication Request: No

Title

CLOCK GENERATOR FOR GENERATING OUTPUT CLOCK HAVING NON-HARMONIC RELATIONSHIP WITH INPUT CLOCK AND RELATED CLOCK GENERATING METHOD THEREOF

Preliminary Class

327

PROTECTING YOUR INVENTION OUTSIDE THE UNITED STATES

Since the rights granted by a U.S. patent extend only throughout the territory of the United States and have no effect in a foreign country, an inventor who wishes patent protection in another country must apply for a patent in a specific country or in regional patent offices. Applicants may wish to consider the filing of an international application under the Patent Cooperation Treaty (PCT). An international (PCT) application generally has the same effect as a regular national patent application in each PCT-member country. The PCT process **simplifies** the filing of patent applications on the same invention in member countries, but **does not result** in a grant of "an international patent" and does not eliminate the need of applicants to file additional documents and fees in countries where patent protection is desired.

Almost every country has its own patent law, and a person desiring a patent in a particular country must make an application for patent in that country in accordance with its particular laws. Since the laws of many countries differ in various respects from the patent law of the United States, applicants are advised to seek guidance from specific foreign countries to ensure that patent rights are not lost prematurely.

Applicants also are advised that in the case of inventions made in the United States, the Director of the USPTO must issue a license before applicants can apply for a patent in a foreign country. The filing of a U.S. patent application serves as a request for a foreign filing license. The application's filing receipt contains further information and guidance as to the status of applicant's license for foreign filing.

Applicants may wish to consult the USPTO booklet, "General Information Concerning Patents" (specifically, the section entitled "Treaties and Foreign Patents") for more information on timeframes and deadlines for filing foreign patent applications. The guide is available either by contacting the USPTO Contact Center at 800-786-9199, or it can be viewed on the USPTO website at http://www.uspto.gov/web/offices/pac/doc/general/index.html.

For information on preventing theft of your intellectual property (patents, trademarks and copyrights), you may wish to consult the U.S. Government website, http://www.stopfakes.gov. Part of a Department of Commerce initiative, this website includes self-help "toolkits" giving innovators guidance on how to protect intellectual property in specific countries such as China, Korea and Mexico. For questions regarding patent enforcement issues, applicants may call the U.S. Government hotline at 1-866-999-HALT (1-866-999-4158).

LICENSE FOR FOREIGN FILING UNDER

Title 35, United States Code, Section 184

Title 37, Code of Federal Regulations, 5.11 & 5.15

GRANTED

The applicant has been granted a license under 35 U.S.C. 184, if the phrase "IF REQUIRED, FOREIGN FILING LICENSE GRANTED" followed by a date appears on this form. Such licenses are issued in all applications where

the conditions for issuance of a license have been met, regardless of whether or not a license may be required as set forth in 37 CFR 5.15. The scope and limitations of this license are set forth in 37 CFR 5.15(a) unless an earlier license has been issued under 37 CFR 5.15(b). The license is subject to revocation upon written notification. The date indicated is the effective date of the license, unless an earlier license of similar scope has been granted under 37 CFR 5.13 or 5.14.

This license is to be retained by the licensee and may be used at any time on or after the effective date thereof unless it is revoked. This license is automatically transferred to any related applications(s) filed under 37 CFR 1.53(d). This license is not retroactive.

The grant of a license does not in any way lessen the responsibility of a licensee for the security of the subject matter as imposed by any Government contract or the provisions of existing laws relating to espionage and the national security or the export of technical data. Licensees should apprise themselves of current regulations especially with respect to certain countries, of other agencies, particularly the Office of Defense Trade Controls, Department of State (with respect to Arms, Munitions and Implements of War (22 CFR 121-128)); the Bureau of Industry and Security, Department of Commerce (15 CFR parts 730-774); the Office of Foreign AssetsControl, Department of Treasury (31 CFR Parts 500+) and the Department of Energy.

NOT GRANTED

No license under 35 U.S.C. 184 has been granted at this time, if the phrase "IF REQUIRED, FOREIGN FILING LICENSE GRANTED" DOES NOT appear on this form. Applicant may still petition for a license under 37 CFR 5.12, if a license is desired before the expiration of 6 months from the filing date of the application. If 6 months has lapsed from the filing date of this application and the licensee has not received any indication of a secrecy order under 35 U.S.C. 181, the licensee may foreign file the application pursuant to 37 CFR 5.15(b).

SelectUSA

The United States represents the largest, most dynamic marketplace in the world and is an unparalleled location for business investment, innovation and commercialization of new technologies. The USA offers tremendous resources and advantages for those who invest and manufacture goods here. Through SelectUSA, our nation works to encourage, facilitate, and accelerate business investment. To learn more about why the USA is the best country in the world to develop technology, manufacture products, and grow your business, visit SelectUSA.gov.

UNITED STATES PATENT AND TRADEMARK OFFICE

UNITED STATES DEPARTMENT OF COMMERCE
United States Patent and Trademark Office
Address: COMMISSIONER FOR PATENTS
P.O. Box 1450
Alexandria, Virginia 22313-1450
www.uspto.gov

APPLICATION NO.	FILING DATE	FIRST NAMED INVENTOR	ATTORNEY DOCKET NO.	CONFIRMATION NO.
13/170,227	06/28/2011	Ran ANKORY	51567	3401

67801 7590 07/14/2011
MARTIN D. MOYNIHAN d/b/a PRTSI, INC.
P.O. BOX 16446
ARLINGTON, VA 22215

EXAMINER

ART UNIT	PAPER NUMBER
2123	

MAIL DATE	DELIVERY MODE
07/14/2011	PAPER

Please find below and/or attached an Office communication concerning this application or proceeding.

The time period for reply, if any, is set in the attached communication.

UNITED STATES PATENT AND TRADEMARK OFFICE

Commissioner for Patents
United States Patent and Trademark Office
P.O. Box 1450
Alexandria, VA 22313-1450
www.uspto.gov

MARTIN D. MOYNIHAN d/b/a PRTSI, INC.
P.O. BOX 16446
ARLINGTON VA 22215

In re Application of:
ANKORY, Ran et al.
Application No. 13/170,227
Filed: June 28, 2011
For: **APPARATUS AND METHOD FOR EVALUATION OF DESIGN**

DECISION ON PETITION UNDER 37 C.F.R. § 1.84(a)(2) TO ACCEPT COLOR DRAWINGS

This is a decision on the petition under 37 C.F.R. § 1.84(a)(2), filed on June 28, 2011, requesting acceptance of color drawings.

The petition requests that the color drawings of Figures 14-16 be accepted in lieu of black and white drawings.

A grantable petition under 37 C.F.R. § 1.84(a)(2) must be accompanied by a fee set forth under 37 C.F.R. § 1.17(h), 3 (three) sets of the color drawings in question, and the specification must contain, or be amended to contain, the following language as the first paragraph in that portion of the specification relating to the brief description of the drawings:

"The patent or application file contains at least one drawing executed in color. Copies of this patent or patent application publication with color drawings will be provided by the U.S. Patent and Trademark Office upon request and payment of the necessary fee."

The petition was filed with the required fee and was filed with three (3) copies of color drawings of Figures 14-16. Page 15, lines 26-28 of the specification contains the required notification described above.

Accordingly, the petition is **GRANTED**.

Any inquiry regarding this decision should be directed to Eddie C. Lee at (571) 272-1732.

/Eddie C. Lee/

Eddie C. Lee
Quality Assurance Specialist, TC 2100

UNITED STATES PATENT AND TRADEMARK OFFICE

UNITED STATES DEPARTMENT OF COMMERCE
United States Patent and Trademark Office
Address: COMMISSIONER FOR PATENTS
P.O. Box 1450
Alexandria, Virginia 22313-1450
www.uspto.gov

APPLICATION NO.	FILING DATE	FIRST NAMED INVENTOR	ATTORNEY DOCKET NO.	CONFIRMATION NO.
13/170,323	06/28/2011	Hans-Joachim Wichmann	03100685AA	3595

30743 7590 03/02/2012
WHITHAM, CURTIS & CHRISTOFFERSON & COOK, P.C.
11491 SUNSET HILLS ROAD
SUITE 340
RESTON, VA 20190

EXAMINER

ART UNIT	PAPER NUMBER
3751	

MAIL DATE	DELIVERY MODE
03/02/2012	PAPER

Please find below and/or attached an Office communication concerning this application or proceeding.

The time period for reply, if any, is set in the attached communication.

UNITED STATES PATENT AND TRADEMARK OFFICE

Commissioner for Patents
United States Patent and Trademark Office
P.O. Box 1450
Alexandria, VA 22313-1450
www.uspto.gov

WHITHAM, CURTIS & CHRISTOFFERSON & COOK, P.C.
11491 SUNSET HILLS ROAD
SUITE 340
RESTON VA 20190

Applicant: Wichmann
Appl. No.: 13/170,323
Filing Date: June 28, 2011
Title: BAG WITH A BAG WALL DESIGNED TO DISSOLVE IN A MOIST ENVIRONMENT AND USE OF THE BAG AS A CEMENT BAG
Attorney Docket No.: 03100685AA
Pub. No.: US 2011/0315272 A1
Pub. Date: December 29, 2011

This is a decision on the request for republication of patent application publication under 37 CFR 1.221(a), filed on February 17, 2012, for the above-identified application.

The request under 37 CFR 1.221(a) is DISMISSED.

37 CFR 1.221(a) requires "a copy of the application in compliance with the Office electronic filing system requirements and be accompanied by the publication fee set forth in § 1.18(d) and the processing fee set forth in § 1.17(i)". If the request for republication does not comply with the electronic filing system requirements, the republication will not take place and the publication fee set forth in § 1.18(d) will be refunded. The processing fee will be retained.

The applicant did not supply a copy of the application in compliance with the Office electronic filing system, as required by 37 CFR 1.221(a) because **the applicant submitted the papers as a "Document for an existing application", which are entered into the application file, and not as a "Pre-Grant Publication" submission**. In addition, the applicant did not provide a copy of the application papers for publication purposes. The request for republication does not comply with the electronic filing system requirements, thus republication will not take place.

Any request for republication under 37 CFR 1.221(a), must be submitted via the EFS system, as a Pre-Grant publication submission and must include a copy of the application in compliance with the Office electronic filing system requirements. The applicant is directed to the following

website for additional instructions on how to submit a Pre-Grant Publication submission via the electronic filing system:

http://www.uspto.gov/ebc/portal/efs/pgpub_quickstart.pdf

Any questions or requests for reconsideration of the decision should be addressed as follows:

By mail to: Mail Stop PGPUB
Commissioner for Patents
P.O. Box 1450
Alexandria, Va. 22313-1450

By facsimile: 571-273-8300

Telephone inquiries regarding this correspondence should be directed to The Office of Data Management at 571-272-4200.

Tammy J. Koontz
Office of Data Management
United States Patent & Trademark Office

UNITED STATES PATENT AND TRADEMARK OFFICE

UNITED STATES DEPARTMENT OF COMMERCE
United States Patent and Trademark Office
Address: COMMISSIONER FOR PATENTS
P.O. Box 1450
Alexandria, Virginia 22313-1450
www.uspto.gov

APPLICATION NO.	FILING DATE	FIRST NAMED INVENTOR	ATTORNEY DOCKET NO.	CONFIRMATION NO.
13/170,323	06/28/2011	Hans-Joachim Wichmann	03100685AA	3595

30743 7590 03/29/2012
WHITHAM, CURTIS & CHRISTOFFERSON & COOK, P.C.
11491 SUNSET HILLS ROAD
SUITE 340
RESTON, VA 20190

EXAMINER

ART UNIT	PAPER NUMBER
3751	

MAIL DATE	DELIVERY MODE
03/29/2012	PAPER

Please find below and/or attached an Office communication concerning this application or proceeding.

The time period for reply, if any, is set in the attached communication.

UNITED STATES PATENT AND TRADEMARK OFFICE

Commissioner for Patents
United States Patent and Trademark Office
P.O. Box 1450
Alexandria, VA 22313-1450
www.uspto.gov

WHITHAM, CURTIS & CHRISTOFFERSON & COOK, P.C.
11491 SUNSET HILLS ROAD
SUITE 340
RESTON VA 20190

Applicant: Wichmann
Appl. No.: 13/170,323
Filing Date: June 28, 2011
Title: BAG WITH A BAG WALL DESIGNED TO DISSOLVE IN A MOIST ENVIRONMENT AND USE OF THE BAG AS A CEMENT BAG
Attorney Docket No.: 03100685AA
Pub. No.: US 2011/0315272 A1
Pub. Date: December 29, 2011

This is a decision on the second request for republication of patent application publication under 37 CFR 1.221(a), filed on March 7, 2012, for the above-identified application.

The request under 37 CFR 1.221(a) is DISMISSED.

37 CFR 1.221(a) requires "a copy of the application in compliance with the Office electronic filing system requirements and be accompanied by the publication fee set forth in § 1.18(d) and the processing fee set forth in § 1.17(i)". If the request for republication does not comply with the electronic filing system requirements, the republication will not take place and the publication fee set forth in § 1.18(d) will be refunded. The processing fee will be retained.

The applicant did not supply a copy of the application in compliance with the Office electronic filing system, as required by 37 CFR 1.221(a) because **the applicant submitted the papers as a "Document for an existing application", which are entered into the application file, and not as a "Pre-Grant Publication" submission**. In addition, the applicant did not provide a copy of the application papers for publication purposes. The request for republication does not comply with the electronic filing system requirements, thus republication will not take place.

Any request for republication under 37 CFR 1.221(a), must be submitted via the EFS system, as a Pre-Grant publication submission and must include a copy of the application in compliance with the Office electronic filing system requirements. The applicant is directed to the following

website for additional instructions on how to submit a Pre-Grant Publication submission via the electronic filing system:

http://www.uspto.gov/ebc/portal/efs/pgpub_quickstart.pdf

Any questions or requests for reconsideration of the decision should be addressed as follows:

By mail to: Mail Stop PGPUB
Commissioner for Patents
P.O. Box 1450
Alexandria, Va. 22313-1450

By facsimile: 571-273-8300

Telephone inquiries regarding this correspondence should be directed to The Office of Data Management at 571-272-4200.

Tammy J. Koontz
Office of Data Management
United States Patent & Trademark Office

UNITED STATES PATENT and TRADEMARK OFFICE

COMMISSIONER FOR PATENTS
UNITED STATES PATENT AND TRADEMARK OFFICE
P.O BOX 1450
ALEXANDRIA, VA 22313-1450
www.uspto.gov

WOOD, HERRON & EVANS, LLP
2700 CAREW TOWER
441 VINE STREET
CINCINNATI OH 45202

MAILED
NOV 09 2011
PCT LEGAL ADMINISTRATION

In re Application of	:	DECISION ON
HANS et al	:	
Application No.: 13/170,741	:	
Filing Date: 28 June 2011	:	PETITION UNDER
Attorney's Docket No.: SHRG-18US	:	
For: Apparatus for Dispensing...	:	
Method Therefore	:	37 CFR 1.182

This is response to applicants' "PETITION UNDER RULE 182" filed on 16 September 2011 to change the application type from 35 USC 111(a) to 35 USC 35 USC 371. The appropriate petition fee of $400.00 37 CFR 1.182 has been provided.

BACKGROUND

On 28 June 2011, applicants electronically filed the aforementioned application as a utility application. The application was processed as a filing under 35 U.S.C. §111(a) because it was electronically submitted as a "Utility under 35 USC 111(a)," rather than a national stage application under 35 U.S.C. 371. As a result, the Electronic Acknowledgment Receipt issued at the time of filing identified the application as a Utility application under 35 USC 111(a).

On 16 September 2011, petitioner filed the instant petition to convert the above application filed under 35 USC §111(a) to a national stage application filed under 35 USC §371.

DISCUSSION

The USPTO has adopted a bright-line test for determining whether application papers will be processed under 35 U.S.C. 371 or alternatively under 35 U.S.C. 111(a). Under this standard, any intended filing of an international application as a national stage application must clearly and unambiguously be identified as such and must satisfy all of the conditions set forth in 35 U.S.C. 371(c). The official USPTO Notice published in the Official Gazette at 1077 OG 13 entitled "Minimum Requirements for Acceptance of Applications Under 35 U.S.C. 371 (the National Stage of PCT)" states, in part, the following:

> The Patent and Trademark Office is continuing to receive application papers which do not clearly identify whether the papers (1) are being submitted to enter the national stage of the Patent Cooperation Treaty (PCT) under 35 U.S.C. 371 or (2) are being filed as a regular national application under 35 U.S.C. 111.
> . . .
> If there are any conflicting instructions as to which sections of the statute (371 or 111) is intended the application will be accepted under 35 U.S.C. 111. (Emphasis added.)

Moreover, section 1893.03(a) of the MPEP states that:

> If there are any conflicting instructions as to whether the filing is under 35 U.S.C. 111(a) or 35 U.S.C. 371, the application will be accepted as filed under 35 U.S.C. 111(a).

U.S. statutes and regulations do not make specific provision for the requested conversion and as such the Office does not grant such petitions for conversion as a mere matter of course. The Office will only grant such petitions upon a showing by applicant of sufficient cause (e.g., the loss of patent rights) where no other remedy is available. In the present case, petitioner has failed to make such a showing. Petitioner is advised that because international application PCT/EP2009/009318 designated the United States, the present application may be treated as a continuation of international application PCT/EP2009/009318, with no loss of priority rights, if the requirements of 35 U.S.C. 120 are met. See MPEP 1895.

Petitioner states that the ADS and the Transmittal Letter identified the application as a national stage application of PCT/EP2009/009318. As a result, petitioner requests a Corrected Filing Receipt be issued designating the captioned application as a national stage processing under 35 U.S.C. 371.

Any intended filing under 35 U.S.C. 371 as a national stage application must clearly and unambiguously be identified as such, otherwise the submission will be treated as being filed under 35 U.S.C. 111(a). Note 37 CFR 1.494(f), 1.495(g) and MPEP 1893.03(a).

At time of filing this application, petitioner had the ability to file the application under 371 by clicking on the 371 radio button in EFS-WEB but that choice was not selected. Rather, petitioner selected the radio button that identified the application as a "Utility" application as evidenced by the Electronic Acknowledgment Receipt. As a result, petitioner's selection of the application during the electronic filing process as a utility application filed under 35 U.S.C. 111(a) and the ADS and Transmittal Letter referring to the application as a national stage under 35 U.S.C. 371 is a conflicting instruction. Consequently, this is not consistent with the intent to a file a U.S. national stage application under 35 U.S.C. 371. Therefore the application was properly treated as a utility application under 35 U.S.C. 111 (a) (37 CFR 1.495(g)).

Moreover, in the present petition applicants have not made a showing that any loss of grant rights would occur if the above-captioned application remains a filing under 35 U.S.C. 111(a). Accordingly, applicants have not established sufficient cause for conversion from a 35 U.S.C. 111(a) application to an application filed under 35 U.S.C. 371. As a result, the aforementioned application was properly processed by the Office under 35 U.S.C. 111(a).

Petitioner, however, is entitled to claim benefit under 35 U.S.C. 120 and 365(c) of the filing date of the international application for the common subject matter, because this application (Serial No. 13/170,741) and the international application (PCT/EP2009/009318) designating the United States were copending on 31 June 2011. However, petitioner must comply with the provisions of 37 CFR 1.78(a) for claiming benefit to the international application

In addition, petitioner is reminded that in order to perfect the claim for priority under 35 U.S.C. 119, petitioner must submit a certified copy of the priority document. The certified copy of priority document submitted to the International Bureau cannot be relied upon to perfect the claim for priority. See MPEP § 1896.

Petitioner's request to have the application treated as a filing under 35 U.S.C. 371 is dismissed.

CONCLUSION

The petition under 37 CFR 1.182 for the reasons noted above is **DISMISSED** without prejudice.

If reconsideration of the merits of the petition is desired, applicant must file a request for reconsideration within a **TWO (2) MONTH** of the mail date of the present Decision. Any reconsideration request should include a cover letter entitled "Renewed Petition Under 37 CFR 1.182."

Any further correspondence with respect to this matter may be filed electronically via EFS-Web selecting the document description "Petition for review and processing by the PCT Legal Office" or by mail addressed to Mail Stop PCT, Commissioner for Patents, Office of PCT Legal Administration, P.O. Box 1450, Alexandria, Virginia 22313-1450, with the contents of the letter marked to the attention of the Office of PCT Legal Administration.

Rafael Bacares
Legal Examiner
PCT Legal Office
Telephone: (571) 272-3276
Facsimile: (571) 273-0459

UNITED STATES PATENT AND TRADEMARK OFFICE

UNITED STATES DEPARTMENT OF COMMERCE
United States Patent and Trademark Office
Address: COMMISSIONER FOR PATENTS
P.O. Box 1450
Alexandria, Virginia 22313-1450
www.uspto.gov

APPLICATION NO.	FILING DATE	FIRST NAMED INVENTOR	ATTORNEY DOCKET NO.	CONFIRMATION NO.
13/170,798	06/28/2011	James B. MILLER	2525.2640001	4458

66777 7590 07/29/2011
STERNE, KESSLER, GOLDSTEIN & FOX, P.L.L.C.
1100 NEW YORK AVENUE, N.W.
WASHINGTON, DC 20005

EXAMINER
LO, WEILUN

ART UNIT	PAPER NUMBER
2179	

MAIL DATE	DELIVERY MODE
07/29/2011	PAPER

Please find below and/or attached an Office communication concerning this application or proceeding.

The time period for reply, if any, is set in the attached communication.

UNITED STATES PATENT AND TRADEMARK OFFICE

Commissioner for Patents
United States Patent and Trademark Office
P.O. Box 1450
Alexandria, VA 22313-1450
www.uspto.gov

STERNE, KESSLER, GOLDSTEIN & FOX, P.L.L.C.
1100 NEW YORK AVENUE, N.W.
WASHINGTON DC 20005

In re Application of: MILLER, James et al. Serial No.: 13/170,798 Filed: June 28, 2011 Title: **DIRECT, GESTURE-BASED ACTIONS FROM DEVICE'S LOCK SCREEN**	DECISION ON PETITION TO MAKE SPECIAL FOR NEW APPLICATION UNDER 37 C.F.R. § 1.102 & M.P.E.P. § 708.02

This is a decision on the petition filed on June 28, 2011 to make the above-identified application special for accelerated examination procedure under 37 C.F.R. § 1.102(d).

The petition to make the application special is **DISMISSED**.

REGULATION AND PRACTICE

A grantable petition to make special under 37 C.F.R. § 1.102(d) and pursuant to the "Change to Practice for Petitions in Patent Applications to Make Special and for Accelerated Examination" published in the Federal Register on June 26, 2006 (71 Fed. Reg. 36323), must satisfy the following conditions:

I. Conditions Regarding the Application:

1. the application must be a non-reissue utility or design application filed under 37 CFR 1.111(a);

2. the application, the petition and the required fees must be filed electronically using the USPTO's electronic filing system (EFS), or EFS-web; if not filed electronically, a statement asserting that EFS and EFS-web were not available during the normal business hours.

3. at the time of filing, the application must be complete under 37 CFR 1.51 and in condition for examination;

4. The application must contain three or fewer independent claims and twenty or fewer total claims and the claims must be directed to a single invention.

II. Conditions Regarding the Petition:

The petition must:

1. be filed with the application;

2. include a statement that applicant agrees not to separately argue the patentability of any independent claim during any appeal in the application;

3. include a statement that applicant agrees to make an election without traverse in a telephone interview.

4. include a statement that applicant agrees to conduct such an interview when requested by the examiner.

5. include a statement, made based on a good faith belief, that a preexamination search in compliance with the following requirements, was conducted, including an identification of the filed of search by United States class and subclass, where applicable, and for database searches, the search logic or chemical structure or sequence used as a query, the name of the file(s) searched and the database service, and the date of the search.

The preexamination search must:

5.1 involve U.S. patents and patent application publications, foreign patent documents, and non-patent literature, unless the applicant can justify with reasonable certainty that no references more pertinent than those already identified are likely to be found in the eliminated sources and includes such a justification with this statement;

5.2. be directed to the claimed invention and encompass all of the features of the claims, giving the claims the broadest reasonable expectation;

5.3. encompass the disclosed features that may be claimed.

6. must provide in support of the petition an accelerated examination support document. An accelerated examination support document must include:

6.1. an information disclosure statement (IDS) in compliance with 37 CFR 1.98 citing each reference deemed most closely related to the subject matter of each of the claims;

6.2. an identification of all the limitations in the claims that are disclosed by the reference specifying where the limitation is disclosed in the cited reference;

6.3. a detailed explanation of how each of the claims are patentable over the references cited with particularity required by 37 CFR 1.111(b) and (c);

6.4. a concise statement of the utility of the invention as defined in each of the independent claims (unless the application is a design application);

6.5. a showing of where each limitation of the claims finds support under 35 USC 112, first paragraph, in the written description of the specification. If applicable, the showing must also identify: (1) each means- (or step) plus-function claim element that invokes consideration under 35 UDC 112, sixth paragraph; and (2) the structure, material, or acts in the specification that corresponds to each means- (or step) plus-function claim element that invokes consideration under 35 UDC 112, sixth paragraph; if the application claims the benefit of one or more applications under title 35, United States Code, the showing must also include where each limitation of the claims finds support under 35 USC 112, first paragraph, in each such application in which such supports exists;

6.6. an identification of any cited references that may be disqualified under 35 USC 103(c).

REVIEW OF FACTS

The conditions I1-I4, II1-II5, II5.1- II5.3, II6.1-II6.4, and II6.6 above are considered to have been met.

However, the petition fails to comply with condition II6.5 above, for the reasons listed below. Therefore, the petition fails to meet the required conditions to be accorded special status under the accelerated examination procedure.

ANALYSIS

A requirement under item II.6.5 is that "if the application claims the benefit of one or more applications under title 35, United States Code, the showing must also include where each limitation of the claims finds support under 35 USC 112, first paragraph, in each such application in which such supports exists." The instant application is a continuation of 12/780,659. Accordingly, in order to comply with this item, the accelerated examination support document must include where each limitation of the claims finds support under 35 USC 112, first paragraph, in the specification of the parent application.

DECISION

For the above-stated reasons, the petition is **DISMISSED**.

Petitioner is given a single opportunity to perfect the petition. Any request for reconsideration of this decision must be submitted within 1 (one) month or 30 (thirty) days, whichever is longer, (no extension of time under 37 CFR 1.136(a)) from the date of this decision in order to be considered timely. Any request for reconsideration must address the deficiencies indicated above.

Petitioner is reminded that, upon granting of the special status of the application on request for reconsideration, the application will be processed expeditiously. However, due to the dismissal of the instant petition, examination may not be completed within twelve months of the filing date of the application.

Any inquiry regarding this decision should be directed to Eddie C. Lee at (571) 272-1732.

/Eddie C. Lee/

Eddie C. Lee
Quality Assurance Specialist
Technology Center 2100

UNITED STATES PATENT AND TRADEMARK OFFICE

UNITED STATES DEPARTMENT OF COMMERCE
United States Patent and Trademark Office
Address: COMMISSIONER FOR PATENTS
P.O. Box 1450
Alexandria, Virginia 22313-1450
www.uspto.gov

APPLICATION NO.	FILING DATE	FIRST NAMED INVENTOR	ATTORNEY DOCKET NO.	CONFIRMATION NO.
13/170,798	06/28/2011	James B. MILLER	2525.2640001	4458

66777 7590 09/23/2011
STERNE, KESSLER, GOLDSTEIN & FOX, P.L.L.C.
1100 NEW YORK AVENUE, N.W.
WASHINGTON, DC 20005

EXAMINER
LO, WEILUN

ART UNIT	PAPER NUMBER
2179	

MAIL DATE	DELIVERY MODE
09/23/2011	PAPER

Please find below and/or attached an Office communication concerning this application or proceeding.

The time period for reply, if any, is set in the attached communication.

UNITED STATES PATENT AND TRADEMARK OFFICE

Commissioner for Patents
United States Patent and Trademark Office
P.O. Box 1450
Alexandria, VA 22313-1450
www.uspto.gov

STERNE, KESSLER, GOLDSTEIN & FOX, P.L.L.C.
1100 NEW YORK AVENUE, N.W.
WASHINGTON DC 20005

In re Application of:
MILLER, James et al.
Serial No.: 13/170,798
Filed: June 28, 2011
Docket: **2525.2640001**
Title: **DIRECT, GESTURE-BASED ACTIONS FROM DEVICE'S LOCK SCREEN**

DECISION ON PETITION TO MAKE SPECIAL FOR NEW APPLICATION UNDER 37 C.F.R. § 1.102 & M.P.E.P. § 708.02

This is a decision on the request for reconsideration of the petition to make special filed on August 29, 2011 to make the above-identified application special for accelerated examination procedure under 37 C.F.R. § 1.102(d). The decision herein is pursuant to the filing of the request for reconsideration dated June 28, 2010.

The petition to make the application special is **GRANTED**.

The application is eligible for accelerated examination and the petition complies with the conditions for granting the application special status pursuant to the "Change to Practice for Petitions in Patent Applications to Make Special and for Accelerated Examination" issued June 26, 2006, in the Federal Register. (71 Fed. Reg. 36323).

The prosecution of the instant application will be conducted expeditiously according to the following guidelines.

1. The application will be docketed to an examiner and taken up for action within two weeks of the date of this decision.

2. Restriction Practice:
   If the examiner determines that the claims are not directed to a single invention, a telephone request to elect one single invention will be made pursuant to MPEP 812.01. As a prerequisite to the grant of this petition, the applicant has agreed to make an oral election, by telephone, without traverse. If the applicant refuses to make an election without traverse, or the examiner cannot reach the applicant after a reasonable effort, the

examiner will treat the first claimed invention (invention defined by claim 1) as having being constructively elected without traverse for examination.

3. Office action:
If it is determined that, after appropriate consultation, there is a potential rejection or any other issue to be addressed, the examiner will telephone the applicant and arrange an interview to discuss and resolve the issue. An Office action, other than a Notice of Allowance and Fee(s) Due (Notice of Allowance), will not be issued unless either: 1) an interview was conducted but did not result in agreed to action that places the application in condition for allowance, or, 2) a determination is made that an interview would be unlikely to result in the application being placed in condition for allowance, and 3) an internal conference has been held to review any rejection of any claim.

4. Time for Reply:
An Office action other than a Notice of Allowance or a final Office action will set a shortened statutory period of one month or thirty days, whichever is longer, for reply with no extension of time available under 37 CFR 1.136(a). Failure to timely file a reply within this non-extendible period for reply will result in the abandonment of the application.

5. Reply by Applicant:
A timely reply to an Office action other than the Notice of Allowance must be submitted electronically via EFS or EFS-web and limited to addressing the rejections, objections and requirement made. Any amendment that attempts to: 1) add claims which would result in more than three pending independent claims or more than twenty pending total claims; 2) present claims not encompassed by the pre-examination search or an updated accelerated examination support document; or 3) present claims that are directed a non-elected invention or an invention other than that previously claimed and examined in the application, will be treated as not fully responsive and will not be entered.

For any amendment to the claims (including any new claim) that is not encompassed by the accelerated examination support document, applicant must provide an updated accelerated examination support document that encompasses the amended or new claims at the time of filing of the amendment.

To proceed expeditiously with the examination, it is recommended that a reply with amendments made to any claim or with any new claim being added be accompanied by an updated accelerated examination support document or a statement explaining how the amended or new claim is supported by the original accelerated examination support document.

6. Information Disclosure Statement (IDS):
Any IDS filed during prosecution must be submitted electronically via EFS or EFS-web, accompanied by an updated accelerated examination support document, and be in compliance with 37 CFR 1.97 and 1.98.

7. Post-Allowance Processing:
   To expedite processing of the allowed application into a patent, the applicant must: 1) pay the required fees within one month of the date of the Notice of Allowance, and 2) not file any post allowance papers not required by the Office. In no event may the issue fee be paid and accepted later than three months from the date of the Notice of Allowance.

8. After-Final and Appeal Procedures:
   To expedite prosecution, after receiving the final Office action, applicant must: 1) promptly file a notice of appeal, an appeal brief and appeal fees; and 2) not request a pre-appeal brief conference.

   Any amendment, affidavit or other evidence filed after final Office action must comply with applicable rules and the requirements outlined in numbered paragraphs 5 and 6 above.

   On appeal, the application will proceed according to normal appeal procedures. After appeal, the application will again be treated special.

9. Proceedings Outside the Normal Examination Process:
   If the application becomes involved in a proceeding that is outside the normal examination process (e.g., a secrecy order, national security review, interference proceeding, petitions under 37 CFR 1.181, 182 or 183), the application will be treated special before and after such proceeding.

10. Final Disposition:
    The twelve month goal of this accelerated examination procedure ends with a final disposition. The mailing of a final Office action, a Notice of Allowance, the filing of a Notice of Appeal, or the filing of a Request for Continued Examination (RCE) is the final disposition.

If, during prosecution, a paper is not filed electronically using EFS-web, a reply is filed but is not fully responsive, the application is involved in an appeal, or a proceeding outside normal examination process, the application will still be examined expeditiously, however, the final disposition may occur more than twelve months from the filing of the application.

Any inquiry regarding this decision should be directed to Eddie C. Lee at (571) 272-1732.

/Eddie C. Lee/

Eddie C. Lee
Quality Assurance Specialist
Technology Center 2100

PTO/SB/20PCT-KR (06-10)
Approved for use through 01/31/2012.
U.S. Patent and Trademark Office; U. S. DEPARTMENT OF COMMERCE
Under the Paperwork Reduction Act of 1995, no persons are required to respond to a collection of information unless it displays a valid OMB control number.

REQUEST FOR PARTICIPATION IN THE PATENT COOPERATION TREATY - PATENT PROSECUTION HIGHWAY (PCT-PPH) PILOT PROGRAM BETWEEN THE KOREAN INTELLECTUAL PROPERTY OFFICE (KIPO) AND THE USPTO

Application No:	13/170,903	Filing date:	06/28/2011
First Named Inventor:	Mohammad Khan		
Title of the Invention:	METHODS, SYSTEMS, AND COMPUTER READABLE MEDIA FOR REGISTERING IN A MERCHANT SPONSORED PROGRAM USING A NEAR FIELD COMMUNICATION (NFC) DEVICE		

THIS REQUEST FOR PARTICIPATION IN THE PCT-PPH PILOT PROGRAM ALONG WITH THE REQUIRED DOCUMENTS MUST BE SUBMITTED VIA EFS-WEB. INFORMATION REGARDING EFS-WEB IS AVAILABLE AT HTTP://WWW.USPTO.GOV/EBC/EFS_HELP.HTML

APPLICANT HEREBY REQUESTS PARTICIPATION IN THE PCT-PPH PROGRAM AND PETITIONS TO MAKE THE ABOVE-IDENTIFIED APPLICATION SPECIAL UNDER THE PCT-PPH PROGRAM.

The above-identified application is (1) a national stage entry of the corresponding PCT application, or (2) a national stage entry of another PCT application which claims priority to the corresponding PCT application, or (3) a national application that claims domestic/ foreign priority to the corresponding PCT application, or (4) a national application which forms the basis for the priority claim in the corresponding PCT application, or (5) a continuing application of a U.S. application that satisfies one of (1) to (4) above, or (6) a U.S. application that claims domestic benefit to a U.S. provisional application which forms the basis for the priority claim in the corresponding PCT application.

The corresponding PCT application number(s) is/are: PCT/US2011/042186

The international filing date of the corresponding PCT application(s) is/are: 06/28/2011

I. List of Required Documents:

a. **A copy of the latest international work product (WO/ISA, WO/IPEA, or IPER) in the above–identified corresponding PCT application(s)**

☒ Is attached.
☐ Is not attached because the document is already in the U.S. application.

b. **A copy of all claims which were indicated as having novelty, inventive step and industrial applicability in the above-identified corresponding PCT application(s).**

☒ Is attached.
☐ Is not attached because the document is already in the U.S. application.

c. **English translations of the documents in a. and b. above are attached (if the documents are not in the English language). A statement that the English translation is accurate is attached for the document in b. above.**

d. **(1) An information disclosure statement listing the documents cited in the international work products (ISR, WO/ISA, WO/IPEA, IPER) of the corresponding PCT application.**

☒ Is attached.
☐ Has already been filed in the above-identified U.S. application on _____

(2) Copies of all documents (except) for U.S. patents or U.S. patent application publications)

☒ Are attached.
☐ Have already been filed in the above-identified U.S. application on _____

This collection of information is required by 35 U.S.C. 119, 37 CFR 1.55, and 37 CFR 1.102(d). The information is required to obtain or retain a benefit by the public, which is to file (and by the USPTO to process) an application. Confidentiality is governed by 35 U.S.C. 122 and 37 CFR 1.11 and 1.14. This collection is estimated to take 2 hours to complete, including gathering, preparing, and submitting the completed application form to the USPTO. Time will vary depending upon the individual case. Any comments on the amount of time you require to complete this form and/or suggestions for reducing this burden should be sent to the Chief Information Officer, U.S. Patent and Trademark Office, U.S. Department of Commerce, P.O. Box 1450, Alexandria, VA 22313-1450. DO NOT SEND FEES OR COMPLETED FORMS TO THIS ADDRESS.

Under the Paperwork Reduction Act of 1995, no persons are required to respond to a collection of information unless it displays a valid OMB control number.

REQUEST FOR PARTICIPATION IN THE PCT-PPH PILOT PROGRAM BETWEEN THE KIPO AND THE USPTO

(continued)

Application No.:	13/170,903
First Named Inventor:	Mohammad Khan

II. Claims Correspondence Table:

Claims in US Application	Patentable Claims in the corresponding PCT Application	Explanation regarding the correspondence
1-21	1-21	Exactly the same

III. All the claims in the US application sufficiently correspond to the patentable claims in the corresponding PCT application.

Signature	Date March 21, 2012
Name (Printed/Typed) Gregory A. Hunt	Registration Number 41,085

CLAIMS

What is claimed is:

1. A system for registering in a merchant sponsored program using a near field communication (NFC) device, the system comprising:

   a smart poster associated with a merchant sponsored program configured for providing a merchant sponsored program identifier when interfaced with an NFC enabled mobile device; and

   a merchant backend server for receiving a request message for merchant sponsored program registration information from the NFC enabled mobile device, wherein the request message from the NFC enabled device includes the merchant sponsored program identifier, for obtaining merchant sponsored program registration information associated with the merchant sponsored program using the merchant sponsored program identifier, and for providing the merchant sponsored program registration information to the NFC enabled mobile device.

2. The system of claim 1 wherein the merchant sponsored program includes at least one of: a retailer loyalty program, a retailer promotion program, and a retailer payment program.

3. The system of claim 1 wherein the merchant backend server is configured to provide the merchant sponsored program registration information to the NFC enabled device via an over the air (OTA) provisioning server.

4. The system of claim 1 wherein the NFC enabled mobile device receives the merchant sponsored registration identifier via NFC by tapping the smart poster.

5. The system of claim 1 wherein at least one of: a tag location code (TLC), a content provider code (CPC), and an Internet protocol (IP) address is obtained with the merchant sponsored program identifier from the smart poster.

6. The system of claim 5 wherein the IP address is associated with the merchant backend server.

7. The system of claim 1 wherein the merchant backend server is configured to receive a request message that includes a subscriber identifier and the merchant sponsored program identifier.

8. The system of claim 1 wherein the merchant sponsored program registration information enables the NFC enabled mobile device to display terms and conditions of the merchant sponsored program.

9. The system of claim 1 wherein the merchant backend server is configured to receive a confirmation message from the NFC enabled mobile device, wherein the confirmation message registers a user associated with the NFC enabled mobile device into the merchant sponsored program.

10. The system of claim 9 wherein the merchant backend server is configured to instruct an over the air (OTA) provisioning server to provide an electronic merchant sponsored program softcard to the NFC enabled mobile device upon receiving the confirmation message.

11. A method for registering in a merchant sponsored program using a near field communication (NFC) device, the method comprising:

interfacing an NFC enabled mobile device with a smart poster associated with a merchant sponsored program to obtain a merchant sponsored program identifier from the smart poster;

receiving, at a merchant backend server, a request message for merchant sponsored program registration information from the NFC enabled mobile device, wherein the request message from the NFC enabled device includes the merchant sponsored program identifier;

obtaining merchant sponsored program registration information associated with the merchant sponsored program using the merchant sponsored program identifier; and

providing the merchant sponsored program registration information to the NFC enabled mobile device.

12. The method of claim 11 wherein the merchant sponsored program includes at least one of a retailer loyalty program or a retailer promotion program.

13. The method of claim 11 wherein providing the merchant sponsored program registration information includes providing the merchant sponsored program registration information to the NFC enabled device via an over the air (OTA) provisioning server.

14. The method of claim 11 wherein interfacing the NFC enabled mobile device with the smart poster includes tapping the NFC enabled mobile device with the smart poster.

15. The method of claim 11 wherein at least one of: a tag location code (TLC), a content provider code (CPC), and an Internet protocol (IP) address is obtained with the merchant sponsored program identifier from the smart poster.

16. The method of claim 15 wherein the IP address is associated with the merchant backend server.

17. The method of claim 11 wherein receiving a request message includes receiving a request message that includes a subscriber identifier and the merchant sponsored program identifier.

18. The method of claim 11 wherein the merchant sponsored program registration information enables the NFC enabled mobile device to display terms and conditions of the merchant sponsored program.

19. The method of claim 11 comprising receiving, at the merchant backend server, a confirmation message from the NFC enabled mobile device, wherein the confirmation message registers a user associated with the NFC enabled mobile device into the merchant sponsored program.

20. The method of claim 19 comprising instructing an over the air (OTA) provisioning server to provide an electronic merchant sponsored program softcard to the NFC enabled mobile device upon receiving the confirmation message.

21. A non-transitory computer readable medium having stored thereon comprising computer executable instructions that when executed by a processor of a computer performs steps comprising:

interfacing an NFC enabled mobile device with a smart poster associated with a merchant sponsored program to obtain a merchant sponsored program identifier from the smart poster;

receiving, at a merchant backend server, a request message for merchant sponsored program registration information from the NFC enabled mobile device, wherein the request message from the NFC enabled device includes the merchant sponsored program identifier;

obtaining merchant sponsored program registration information associated with the merchant sponsored program using the merchant sponsored program identifier; and

providing the merchant sponsored program registration information to the NFC enabled mobile device.

UNITED STATES PATENT AND TRADEMARK OFFICE

Commissioner for Patents
United States Patent and Trademark Office
P.O. Box 1450
Alexandria, VA 22313-1450
www.uspto.gov

In re Application of
HALBERT FISCHEL

Application No. 13171080

Filed: June 28,2011

Attorney Docket No. 11109-P-F1

:DECISION ON PETITION TO MAKE SPECIAL
:UNDER 37 CFR 1.102(c)(1)

This is a decision on the electronic petition under 37 CFR 1.102 (c)(1), filed 27-JUL-2011 to make the above-identified application special based on applicant's age as set forth in MPEP § 708.02, Section IV.

The petition is **GRANTED**.

A grantable petition to make an application special under 37 CFR 1.102(c)(1), MPEP § 708.02, Section IV: Applicant's Age must include a statement by applicant or a registered practitioner having evidence that applicant is at least 65 years of age. No fee is required.

Accordingly, the above-identified application has been accorded "special" status and will be taken up for action by the examiner upon the completion of all pre-examination processing.

Telephone inquiries concerning this electronic decision should be directed to the Electronic Business Center at 866-217-9197.

All other inquiries concerning either the examination or status of the application should be directed to the Technology Center.

Doc code : PET.OP.AGE
Description : Petition to make special based on Age/Health

PTO/SB/130 (07-09)
Approved for use through 07/31/2012. OMB 0651- 0031
U.S. Patent and Trademark Office; U.S. DEPARTMENT OF COMMERCE
Under the Paperwork Reduction Act of 1995, no persons are required to respond to a collection of information unless it contains a valid OMB control number

PETITION TO MAKE SPECIAL BASED ON AGE FOR ADVANCEMENT OF EXAMINATION UNDER 37 CFR 1.102(c)(1)

Application Information

Application Number	13/171,080	Confirmation Number	4916	Filing Date	2011-06-28
Attorney Docket Number (optional)	11109-P-F1	Art Unit	1726	Examiner	
First Named Inventor	Fischel, Halbert				
Title of Invention	CROSS-FLOW ELECTROCHEMICAL BATTERIES				

Attention: Office of Petitions
An application may be made special for advancement of examination upon filing of a petition showing that the applicant is 65 years of age, or more. No fee is required with such a petition. See 37 CFR 1.102(c)(1) and MPEP 708.02 (IV).

APPLICANT HEREBY PETITIONS TO MAKE SPECIAL FOR ADVANCEMENT OF EXAMINATION IN THIS APPLICATION UNDER 37 CFR 1.102(c)(1) and MPEP 708.02 (IV) ON THE BASIS OF THE APPLICANT'S AGE.

A grantable petition requires one of the following items:
(1) Statement by one named inventor in the application that he/she is 65 years of age, or more; or
(2) Certification by a registered attorney/agent having evidence such as a birth certificate, passport, driver's license, etc. showing one named inventor in the application is 65 years of age, or more.

Name of Inventor who is 65 years of age, or older

Given Name	Middle Name	Family Name	Suffix
Halbert	Paul	Fischel	

A signature of the applicant or representative is required in accordance with 37 CFR 1.33 and 10.18.
Please see 37 CFR 1.4(d) for the format of the signature.

Select (1) or (2) :

○ (1) I am an inventor in this application and I am 65 years of age, or more.

● (2) I am an attorney or agent registered to practice before the Patent and Trademark Office, and I certify that I am in possession of evidence, and will retain such in the application file record, showing that the inventor listed above is 65 years of age, or more.

Signature	/Sheldon Epstein/	Date (YYYY-MM-DD)	2011-07-27
Name	Sheldon L. Epstein	Registration Number	22343

PTO/SB/130 (07-09)
Approved for use through 07/31/2012. OMB 0651- 0031
U.S. Patent and Trademark Office; U.S. DEPARTMENT OF COMMERCE
Under the Paperwork Reduction Act of 1995, no persons are required to respond to a collection of information unless it contains a valid OMB control number

Privacy Act Statement

The Privacy Act of 1974 (P.L. 93-579) requires that you be given certain information in connection with your submission of the attached form related to a patent application or patent. Accordingly, pursuant to the requirements of the Act, please be advised that: (1) the general authority for the collection of this information is 35 U.S.C. 2(b)(2); (2) furnishing of the information solicited is voluntary; and (3) the principal purpose for which the information is used by the U.S. Patent and Trademark Office is to process and/or examine your submission related to a patent application or patent. If you do not furnish the requested information, the U.S. Patent and Trademark Office may not be able to process and/or examine your submission, which may result in termination of proceedings or abandonment of the application or expiration of the patent.

The information provided by you in this form will be subject to the following routine uses:

1. The information on this form will be treated confidentially to the extent allowed under the Freedom of Information Act (5 U.S.C. 552) and the Privacy Act (5 U.S.C. 552a). Records from this system of records may be disclosed to the Department of Justice to determine whether the Fr eedom of Information Act requires disclosure of these records.

2. A record from this system of records may be disclosed, as a routine use, in the course of presenting evidence to a court, magistrate, or administrative tribunal, including disclosures to opposing counsel in the course of settlement negotiations.

3. A record in this system of records may be disclosed, as a routine use, to a Member of Congress submitting a request involving an individual, to whom the record pertains, when the individual has requested assistance from the Member with respect to the subject matter of the record.

4. A record in this system of records may be disclosed, as a routine use, to a contractor of the Agency having need for the information in order to perform a contract. Recipients of information shall be required to comply with the requirements of the Privacy Act of 1974, as amended, pursuant to 5 U.S.C. 552a(m).

5. A record related to an International Application filed under the Patent Cooperation Treaty in this system of records may be disclosed, as a routine use, to the International Bureau of the World Intellectual Property Organization, pursuant to the Patent Cooperation Treaty.

6. A record in this system of records may be disclosed, as a routine use, to another federal agency for purposes of National Security review (35 U.S.C. 181) and for review pursuant to the Atomic Energy Act (42 U.S.C. 218(c)).

7. A record from this system of records may be disclosed, as a routine use, to the Administrator, General Services, or his/her designee, during an inspection of records conducted by GSA as part of that agency's responsibility to recommend improvements in records management practices and programs, under authority of 44 U.S.C. 2904 and 2906. Such disclosure shall be made in accordance with the GSA regulations governing inspection of records for this purpose, and any other relevant (i.e., GSA or Commerce) directive. Such disclosure shall not be used to make determinations about indivi duals.

8. A record from this system of records may be disclosed, as a routine use, to the public after either publication of the application pursuant to 35 U.S.C. 122(b) or issuance of a patent pursuant to 35 U.S.C. 151. Further, a record may be disclosed, subject to the limitations of 37 CFR 1.14, as a routine use, to the public if the record was filed in an application which became abandoned or in which the proceedings were terminated and which application is referenced by either a published application, an application open to public inspections or an issued patent.

9. A record from this system of records may be disclosed, as a routine use, to a Federal, State, or local law enforcement agency, if the USPTO becomes aware of a violation or potential violation of law or regulation.

UNITED STATES PATENT AND TRADEMARK OFFICE

UNITED STATES DEPARTMENT OF COMMERCE
United States Patent and Trademark Office
Address: COMMISSIONER FOR PATENTS
P.O. Box 1450
Alexandria, Virginia 22313-1450
www.uspto.gov

APPLICATION NO.	FILING DATE	FIRST NAMED INVENTOR	ATTORNEY DOCKET NO.	CONFIRMATION NO.
13/171,206	06/28/2011	Soichi OIKAWA	TOSH/0292US	5134

EXAMINER
MILLER, BRIAN E

ART UNIT	PAPER NUMBER
2627	

MAIL DATE	DELIVERY MODE
03/27/2012	PAPER

7590 03/27/2012
PATTERSON & SHERIDAN, L.L.P.
3040 POST OAK BOULEVARD
SUITE 1500
HOUSTON, TX 77056

DECISION GRANTING PETITION UNDER 37 CFR 1.138(d)

The declaration of express abandonment is recognized

This is in response to the petition under 37 CFR 1.138(d), requesting for a refund of any previously paid search fee and excess claims fee in the above-identified application.

The petition is granted.

The express abandonment is recognized. Any previously paid search fee and excess claims fee are hereby refunded.

Telephone inquiries should be directed to the Office of Data Management at (571) 272-4200.

Betty Powell
Patent Publication Branch
Office of Data Management

FORM PET651G (Rev. 08/07)

Doc Code: PET.GREEN
Document Description: Petition for Green Tech Pilot

PTO/SB/420 (11-10)
Approved for use through 01/31/2011. OMB 0651-0062
U.S. Patent and Trademark Office, U.S. DEPARTMENT OF COMMERCE
Under the Paperwork Reduction Act of 1995, no persons are required to respond to a collection of information unless it displays a valid OMB control number.

PETITION TO MAKE SPECIAL UNDER THE GREEN TECHNOLOGY PILOT PROGRAM

Attorney Docket Number: 030348-00189	Application Number (if known): TBD	Filing date: HEREWITH
First Named Inventor: ALEXANDER SHAIKEVITCH		
Title: ELONGATED LENSES FOR USE IN LIGHT EMITTING APPRATUSES		

APPLICANT HEREBY REQUESTS TO PARTICIPATE IN THE GREEN TECHNOLOGY PILOT PROGRAM FOR THE ABOVE-IDENTIFIED APPLICATION. See Instruction Sheet on page 2.

This petition must be timely filed electronically using the USPTO electronic filing system, EFS-Web.

1. By filing this petition:

   Applicant is requesting early publication: Applicant hereby requests early publication under 37 CFR 1.219 and the publication fee set forth in 37 CFR 1.18(d) accompanies this request.

2. By filing this petition: applicant is agreeing to make an election without traverse in a telephonic interview and elect an invention that meets the eligibility requirements for the Green Technology Pilot Program, if the Office determines that the claims are not obviously directed to a single invention. See Instruction Sheet.

3. This request is accompanied by statements of special status for the eligibility requirement.

4. The application contains no more than three (3) independent claims and twenty (20) total claims.

5. The application does not contain any multiple dependent claims.

6. Other attachments: _____

Signature Craig Gelfound	Date 6.28.11
Name (Print/Typed) CRAIG A. GELFOUND	Registration Number 41,032

Note: *Signatures of all the inventors or assignees of record of the entire interest or their representative(s) are required in accordance with 37 CFR 1.33 and 11.18. Please see 37 CFR 1.4(d) for the form of the signature. If necessary, submit multiple forms for more than one signature see below**

☒ *Total of 1 forms are submitted.

The information is required to obtain or retain a benefit by the public which is to file (and by the USPTO to process) an application. Confidentiality is governed by 35 U.S.C. 122 and 37 CFR 1.11 and 1.14. This collection is estimated to take 12 hours to complete, including gathering, preparing, and submitting the completed application form to the USPTO. Time will vary depending upon the individual case. Any comments on the amount of time you require to complete this form and/or suggestions for reducing this burden, should be sent to the Chief Information Officer, U.S. Patent and Trademark Office, U.S. Department of Commerce, P.O. Box 1450, Alexandria, VA 22313-1450. DO NOT SEND FEES OR COMPLETED FORMS TO THIS ADDRESS. **SEND TO: Commissioner for Patents, P.O. Box 1450, Alexandria, VA 22313-1450.**

If you need assistance in completing the form, call 1-800-PTO-9199 and select option 2.

PATENT APPLICATION

IN THE UNITED STATES PATENT AND TRADEMARK OFFICE

Docket No. 030348.00189

In re patent application of:

ALEXANDER SHAIKEVITCH

Confirmation No.: TBD

Serial No.: TBD

Art Unit: TBD

Filed: HEREWITH

Examiner: TBD

For: ELONGATED LENSES FOR USE IN LIGHT EMITTING APPRATUSES

STATEMENT OF SPECIAL STATUS

Commissioner for Patents
P.O. Box 1450
Alexandria, VA 22313-1450

June 28, 2011

Sir:

Applicant is entitled to special status because the claims are directed to a single invention that materially contributes to the more efficient utilization and conservation of energy resources. In particular, the invention is directed to various light emitting diode (LED) configurations for replacing conventional light sources, such as incandescent lamps. LEDs have substantially higher light conversion efficiencies than incandescent lamps, and therefore, can dramatically reduce energy consumption.

In the event that any fees are due with respect to this paper, please charge Deposit Account No. 01-2300, referencing Atty. Docket No. 030348.00189.

Respectfully submitted,

Craig A. Gelfound
Registration No. 41,032

Customer No.: 68543
ARENT FOX LLP
555 West Fifth Street
48th Floor
Los Angeles, California 90013
Tel: (213) 629-7400
Fax: (213) 629-7401

CAG/cah

UNITED STATES PATENT AND TRADEMARK OFFICE

UNITED STATES DEPARTMENT OF COMMERCE
United States Patent and Trademark Office
Address: COMMISSIONER FOR PATENTS
P.O. Box 1450
Alexandria, Virginia 22313-1450
www.uspto.gov

APPLICATION NO.	FILING DATE	FIRST NAMED INVENTOR	ATTORNEY DOCKET NO.	CONFIRMATION NO.
13/171,321	06/28/2011	ALEXANDER SHAIKEVITCH	030348-00189	5346

68543 7590 08/01/2011
Arent Fox LLP
555 West Fifth Street
48th Floor
Los Angeles, CA 90013

EXAMINER

ART UNIT	PAPER NUMBER
2878	

NOTIFICATION DATE	DELIVERY MODE
08/01/2011	ELECTRONIC

Please find below and/or attached an Office communication concerning this application or proceeding.

The time period for reply, if any, is set in the attached communication.

Notice of the Office communication was sent electronically on above-indicated "Notification Date" to the following e-mail address(es):

LAIPDocket@arentfox.com
Patent_Mail@arentfox.com

UNITED STATES PATENT AND TRADEMARK OFFICE

Commissioner for Patents
United States Patent and Trademark Office
P.O. Box 1450
Alexandria, VA 22313-1450
www.uspto.gov

Arent Fox LLP
555 West Fifth Street
48th Floor
Los Angeles CA 90013

In re Application of	:	
Alexander SHAIKEVITCH	:	DECISION ON PETITION
Application No. 13/171321	:	TO MAKE SPECIAL UNDER
Filed: June 28, 2011	:	THE GREEN TECHNOLOGY
Attorney Docket No. 030348-00189	:	PILOT PROGRAM

This is a decision on the petition under 37 CFR 1.102, filed on June 28, 2011, to make the above-identified application special under the pilot program for applications pertaining to Green Technologies as set forth 74 Federal Register Notice 64666 (December 8, 2009) and amended by 75 Federal Register Notice 28554 (May 21, 2010) and 75 Federal Register Notice 69049 (November 10, 2010).

The petition is **GRANTED**.

A grantable petition to make an application special under 37 CFR 1.102 and the pilot program as set forth in 74 FR 64666 must be directed to a nonprovisional application filed under 35 USC 111(a) or be a national stage entry under 35 USC 371, exclusive of any reissue applications.

In order to qualify for special status, the following requirements must be met. 1) The application must have no more than 3 independent claims and no more than 20 total claims. 2) The application must not contain any multiple dependent claims. 3) The petition must state the basis for seeking special status, i.e., the claimed invention either: A) materially enhances the quality of the environment or B) materially contributes to: i) the discovery or development of renewable energy resources, ii) the more efficient utilization and conservation of energy resources, or iii) greenhouse gas emission reduction. 4) If the disclosure is not clear on its face that the claimed invention materially contributes under category (A) or (B), the petition must be accompanied by a statement by the applicant, assignee, or an attorney/agent registered to practice before the Office explaining how the materiality standard is met. 5) A statement that applicant will agree to make an election without traverse in a telephonic interview if a restriction requirement is made by the examiner. 6) The petition to make special must be filed electronically. 7) The petition must be filed at least one day prior to the date that a first Office Action appears in the Patent Application Information Retrieval (PAIR) system. 8) The petition must be accompanied by a request for early publication in compliance with 37 CFR 1.219 and include the publication fee as set forth in 37 CFR 1.18(d).

The requirement for a fee for consideration of the petition to make special for applications pertaining to Green Technologies has been waived.

The instant petition complies with items 1 – 8 above. Accordingly, the above-identified application has been accorded "special" status.

Telephone inquires concerning this decision should be directed to Colleen Dunn at 571-272-1170.

The application is being forwarded to the appropriate Technology Center Art Unit for action on the merits commensurate with this decision.

/Colleen Dunn/

Colleen Dunn
Quality Assurance Specialist
Technology Center 2800

Doc Code: PET.GREEN
Document Description: Petition for Green Tech Pilot

PTO/SB/420 (11-10)
Approved for use through 01/31/2011. OMB 0651-0062
U.S. Patent and Trademark Office; U. S. DEPARTMENT OF COMMERCE
Under the Paperwork Reduction Act of 1995, no persons are required to respond to a collection of information unless it displays a valid OMB control number.

PETITION TO MAKE SPECIAL UNDER THE GREEN TECHNOLOGY PILOT PROGRAM

Attorney Docket Number: 030348-00210	Application Number (if known): TBD	Filing date: HEREWITH
First Named Inventor: ALEXANDER SHAIKEVITCH		
Title: METHODS OF MANUFACTURING ELONGATED LENSES FOR USE IN LIGHT EMITTING APPARATUSES		

APPLICANT HEREBY REQUESTS TO PARTICIPATE IN THE GREEN TECHNOLOGY PILOT PROGRAM FOR THE ABOVE-IDENTIFIED APPLICATION. See Instruction Sheet on page 2.

This petition must be timely filed electronically using the USPTO electronic filing system, EFS-Web.

1. By filing this petition:

   Applicant is requesting early publication: Applicant hereby requests early publication under 37 CFR 1.219 and the publication fee set forth in 37 CFR 1.18(d) accompanies this request.

2. By filing this petition: applicant is agreeing to make an election without traverse in a telephonic interview and elect an invention that meets the eligibility requirements for the Green Technology Pilot Program, if the Office determines that the claims are not obviously directed to a single invention. See Instruction Sheet.

3. This request is accompanied by statements of special status for the eligibility requirement.

4. The application contains no more than three (3) independent claims and twenty (20) total claims.

5. The application does not contain any multiple dependent claims.

6. Other attachments: _____

Signature Craig Gelfound	Date 6.28.11
Name (Print/Typed) CRAIG A. GELFOUND	Registration Number 41,032

Note: *Signatures of all the inventors or assignees of record of the entire interest or their representative(s) are required in accordance with 37 CFR 1.33 and 11.18. Please see 37 CFR 1.4(d) for the form of the signature. If necessary, submit multiple forms for more than one signature see below*.*

☒ *Total of 1 forms are submitted.

The information is required to obtain or retain a benefit by the public which is to file (and by the USPTO to process) an application. Confidentiality is governed by 35 U.S.C. 122 and 37 CFR 1.11 and 1.14. This collection is estimated to take 12 hours to complete, including gathering, preparing, and submitting the completed application form to the USPTO. Time will vary depending upon the individual case. Any comments on the amount of time you require to complete this form and/or suggestions for reducing this burden, should be sent to the Chief Information Officer, U.S. Patent and Trademark Office, U.S. Department of Commerce. P.O. Box 1450, Alexandria, VA 22313-1450. DO NOT SEND FEES OR COMPLETED FORMS TO THIS ADDRESS. **SEND TO: Commissioner for Patents, P.O. Box 1450, Alexandria, VA 22313-1450.**

If you need assistance in completing the form, call 1-800-PTO-9199 and select option 2

PATENT APPLICATION

IN THE UNITED STATES PATENT AND TRADEMARK OFFICE

Docket No. 030348.00210

In re patent application of:

ALEXANDER SHAIKEVITCH

Confirmation No.: TBD

Serial No.: TBD

Art Unit: TBD

Filed: HEREWITH

Examiner: TBD

For: METHODS OF MANUFACTURING ELONGATED LENSES FOR USE IN LIGHT EMITTING APPARATUSES

STATEMENT OF SPECIAL STATUS

Commissioner for Patents
P.O. Box 1450
Alexandria, VA 22313-1450

June 28, 2011

Sir:

Applicant is entitled to special status because the claims are directed to a single invention that materially contributes to the more efficient utilization and conservation of energy resources. In particular, the invention is directed to various light emitting diode (LED) configurations for replacing conventional light sources, such as incandescent lamps. LEDs have substantially higher light conversion efficiencies than incandescent lamps, and therefore, can dramatically reduce energy consumption.

In the event that any fees are due with respect to this paper, please charge Deposit Account No. 01-2300, referencing Atty. Docket No. 030348.00210.

Respectfully submitted,

Craig A. Gelfound
Registration No. 41,032

Customer No.: 68543
ARENT FOX LLP
555 West Fifth Street
48th Floor
Los Angeles, California 90013
Tel: (213) 629-7400
Fax: (213) 629-7401

CAG/cah

UNITED STATES PATENT AND TRADEMARK OFFICE

UNITED STATES DEPARTMENT OF COMMERCE
United States Patent and Trademark Office
Address: COMMISSIONER FOR PATENTS
P.O. Box 1450
Alexandria, Virginia 22313-1450
www.uspto.gov

APPLICATION NO.	FILING DATE	FIRST NAMED INVENTOR	ATTORNEY DOCKET NO.	CONFIRMATION NO.
13/171,335	06/28/2011	ALEXANDER SHAIKEVITCH	030348-00210	5371

68543 7590 08/01/2011
Arent Fox LLP
555 West Fifth Street
48th Floor
Los Angeles, CA 90013

EXAMINER

ART UNIT	PAPER NUMBER
2875	

NOTIFICATION DATE	DELIVERY MODE
08/01/2011	ELECTRONIC

Please find below and/or attached an Office communication concerning this application or proceeding.

The time period for reply, if any, is set in the attached communication.

Notice of the Office communication was sent electronically on above-indicated "Notification Date" to the following e-mail address(es):

LAIPDocket@arentfox.com
Patent_Mail@arentfox.com

UNITED STATES PATENT AND TRADEMARK OFFICE

Commissioner for Patents
United States Patent and Trademark Office
P.O. Box 1450
Alexandria, VA 22313-1450
www.uspto.gov

Arent Fox LLP
555 West Fifth Street
48th Floor
Los Angeles CA 90013

In re Application of	:	
Alexander SHAIKEVITCH	:	DECISION ON PETITION
Application No. 13/171335	:	TO MAKE SPECIAL UNDER
Filed: June 28, 2011	:	THE GREEN TECHNOLOGY
Attorney Docket No. 030348-00210	:	PILOT PROGRAM

This is a decision on the petition under 37 CFR 1.102, filed on June 28, 2011, to make the above-identified application special under the pilot program for applications pertaining to Green Technologies as set forth 74 Federal Register Notice 64666 (December 8, 2009) and amended by 75 Federal Register Notice 28554 (May 21, 2010) and 75 Federal Register Notice 69049 (November 10, 2010).

The petition is **GRANTED**.

A grantable petition to make an application special under 37 CFR 1.102 and the pilot program as set forth in 74 FR 64666 must be directed to a nonprovisional application filed under 35 USC 111(a) or be a national stage entry under 35 USC 371, exclusive of any reissue applications.

In order to qualify for special status, the following requirements must be met. 1) The application must have no more than 3 independent claims and no more than 20 total claims. 2) The application must not contain any multiple dependent claims. 3) The petition must state the basis for seeking special status, i.e., the claimed invention either: A) materially enhances the quality of the environment or B) materially contributes to: i) the discovery or development of renewable energy resources, ii) the more efficient utilization and conservation of energy resources, or iii) greenhouse gas emission reduction. 4) If the disclosure is not clear on its face that the claimed invention materially contributes under category (A) or (B), the petition must be accompanied by a statement by the applicant, assignee, or an attorney/agent registered to practice before the Office explaining how the materiality standard is met. 5) A statement that applicant will agree to make an election without traverse in a telephonic interview if a restriction requirement is made by the examiner. 6) The petition to make special must be filed electronically. 7) The petition must be filed at least one day prior to the date that a first Office Action appears in the Patent Application Information Retrieval (PAIR) system. 8) The petition must be accompanied by a request for early publication in compliance with 37 CFR 1.219 and include the publication fee as set forth in 37 CFR 1.18(d).

The requirement for a fee for consideration of the petition to make special for applications pertaining to Green Technologies has been waived.

The instant petition complies with items 1 – 8 above. Accordingly, the above-identified application has been accorded "special" status.

Telephone inquires concerning this decision should be directed to Colleen Dunn at 571-272-1170.

The application is being forwarded to the appropriate Technology Center Art Unit for action on the merits commensurate with this decision.

/Colleen Dunn/

Colleen Dunn
Quality Assurance Specialist
Technology Center 2800

UNITED STATES PATENT AND TRADEMARK OFFICE

Commissioner for Patents
United States Patent and Trademark Office
P.O. Box 1450
Alexandria, VA 22313-1450
www.uspto.gov

Paper No.

BANNER & WITCOFF, LTD.
TEN SOUTH WACKER DRIVE
SUITE 3000
CHICAGO IL 60606

MAILED
SEP 09 2011
OFFICE OF PETITIONS

In re Application of :
Dulac et al. : ON PETITION
Application No. 13/171,644 :
Filed: June 29, 2011 :
Atty Docket No. 027035.00009 :

This is in response to the "PETITION UNDER 37 C.F.R. § 1.57(a)" filed August 24, 2011, requesting that the above-referenced application be accorded a filing date of June 29, 2011. This petition is being treated pursuant to 37 CFR 1.53(e)(2)[1].

Application papers in the above-identified application were deposited on June 29, 2011. However, on July 14, 2011, the Office of Patent Application Processing mailed applicants a "Notice of Incomplete Nonprovisional Application," notifying applicants that the application papers had not been accorded a filing date because the application was deposited without drawings. (In addition, a substitute specification was required).

In response, applicants timely filed this petition. Applicants acknowledge that the drawings (figures 1-2) were inadvertently omitted from the nonprovisional application. Applicants state that this application is a continuation of application No.

[1] Any request for review of a notification pursuant to paragraph (e)(1) of this section, or a notification that the original application papers lack a portion of the specification or drawing(s), must be by way of a petition pursuant to this paragraph accompanied by the fee set forth in § 1.17(f). In the absence of a timely (§ 1.181(f)) petition pursuant to this paragraph, the filing date of an application in which the applicant was notified of a filing error pursuant to paragraph (e)(1) of this section will be the date the filing error is corrected.

10/596,060, contains a claim to its benefit under 37 CFR 1.78 and incorporates the 10/596,060 by reference in its entirety. Applicants state that application No. 10/596,060 filed on May 26, 2006 contains Figures 1-2 sought to be added to this specification.

Applicants' arguments and evidence have been considered. It is noted that this application was properly filed as a continuation of application No. 10/596,060. In addition, application No. 10/596,060 was incorporated by reference on filing. Thus, pursuant to 37 CFR 1.57(a) or 37 CFR 1.182, applicants may amend this application to add Figures 1-2 contained in application No. 10/596,060. However, this petition does not include an amendment as required by 37 CFR 1.57(a)(1)(or 37 CFR 1.182 for material expressly incorporated by reference) to add the omitted drawings.

Nonetheless, this application is entitled to a filing date. It is controlling that a review of the application confirms that as filed the application contained at least one method claim. MPEP 601.01(f) provides that:

> It has been USPTO practice to treat an application that contains at least one process or method claim as an application for which a drawing is not necessary for an understanding of the invention under 35 U.S.C. 113 (first sentence).

Thus, pursuant to § 601.01(f), a drawing is not considered essential for a filing date. Thus, the application is entitled to a filing date without drawings present in the application.

Accordingly, the Office should have mailed a Notice of Omitted Items and not a Notice of Incomplete Nonprovisional Application. As stated in MPEP 601.01(g), if an application is entitled to a filing date, the mailing of a Notice of Omitted Items will permit *inter alia*:

> If an application was filed on or after September 21, 2004, and contains a claim under 37 CFR 1.55 for priority of a prior-filed foreign application, or a claim under 37 CFR 1.78 for the benefit of a prior-filed provisional, nonprovisional, or international application that was present on the filing date of the application, and the omitted portion of the drawing(s) was inadvertently omitted

from the application and is completely contained in the prior-filed application, applicant may submit an amendment to include the inadvertently omitted portion of the drawing(s) pursuant to 37 CFR 1.57(a). The amendment should be submitted in response to the Office action and must comply with 37 CFR 1.57(a) and 37 CFR 1.121. See MPEP § 201.17.

Given that the application is entitled to a filing date, no petition pursuant to 37 CFR 1.57(a)(or 37 CFR 1.182) is required. An amendment directed to the examiner to include the inadvertently omitted drawings must be filed to include the inadvertently omitted drawings. This amendment in compliance with §§ 1.57 and 1.121 should be filed within **TWO (2) MONTHS** of the mailing date of this decision. See 37 CFR 1.181(f), 37 CFR 1.57(f) and MPEP 608.01(p).

To the extent the instant petition requests a filing date of June 29, 2011 with no drawings present in the application, the petition is **GRANTED**.

Given the basis for granting this petition, the petition fee is being refunded to the Deposit Account, as authorized.

The Office of Patent Application Processing (OPAP) has been advised of this decision. Pursuant to this decision, the application has been referred to OPAP for:

- **according of a filing date of June 29, 2011;**
- **for indication in Office records, as appropriate, that "0" sheets of drawings were present on filing;**
- **for processing of the substitute specification filed August 24, 2011;** and
- **for issuance of a filing receipt.**

Telephone inquiries concerning this matter may be directed to Senior Petitions Attorney, Nancy Johnson at (571) 272-3219.

Chris Bottorff
Petitions Examiner
Office of Petitions

Doc Code: PET.GREEN
Document Description: Petition for Green Tech Pilot

PTO/SB/420 (11-10)
Approved for use through 01/31/2011. OMB 0651-0062
U.S. Patent and Trademark Office; U. S. DEPARTMENT OF COMMERCE
Under the Paperwork Reduction Act of 1995, no persons are required to respond to a collection of information unless it displays a valid OMB control number.

PETITION TO MAKE SPECIAL UNDER THE GREEN TECHNOLOGY PILOT PROGRAM

Attorney Docket Number: 247842	Application Number (if known): 13/171683	Filing date: 2011-06-29
First Named Inventor: Robert Steigerwald		
Title: DC TO DC POWER CONVERTERS AND METHODS OF CONTROLLING THE SAME		

APPLICANT HEREBY REQUESTS TO PARTICIPATE IN THE GREEN TECHNOLOGY PILOT PROGRAM FOR THE ABOVE-IDENTIFIED APPLICATION. See Instruction Sheet on page 2.

This petition must be timely filed electronically using the USPTO electronic filing system, EFS-Web.

1. By filing this petition:

   Applicant is requesting early publication: Applicant hereby requests early publication under 37 CFR 1.219 and the publication fee set forth in 37 CFR 1.18(d) accompanies this request.

2. By filing this petition: applicant is agreeing to make an election without traverse in a telephonic interview and elect an invention that meets the eligibility requirements for the Green Technology Pilot Program, if the Office determines that the claims are not obviously directed to a single invention. See Instruction Sheet.

3. This request is accompanied by statements of special status for the eligibility requirement.

4. The application contains no more than three (3) independent claims and twenty (20) total claims.

5. The application does not contain any multiple dependent claims.

6. Other attachments: Statement Concerning the Basis for the Special Status

Signature /Allison W. Mages/	Date 2011-11-10
Name (Print/Typed) Allison W .Mages	Registration Number 57,275

Note: *Signatures of all the inventors or assignees of record of the entire interest or their representative(s) are required in accordance with 37 CFR 1.33 and 11.18. Please see 37 CFR 1.4(d) for the form of the signature. If necessary, submit multiple forms for more than one signature see below*.*

☐ *Total of ..... forms are submitted.

The information is required to obtain or retain a benefit by the public which is to file (and by the USPTO to process) an application. Confidentiality is governed by 35 U.S.C. 122 and 37 CFR 1.11 and 1.14. This collection is estimated to take 12 hours to complete, including gathering, preparing, and submitting the completed application form to the USPTO. Time will vary depending upon the individual case. Any comments on the amount of time you require to complete this form and/or suggestions for reducing this burden, should be sent to the Chief Information Officer, U.S. Patent and Trademark Office, U.S. Department of Commerce, P.O. Box 1450, Alexandria, VA 22313-1450. DO NOT SEND FEES OR COMPLETED FORMS TO THIS ADDRESS. **SEND TO: Commissioner for Patents, P.O. Box 1450, Alexandria, VA 22313-1450.**

If you need assistance in completing the form, call 1-800-PTO-9199 and select option 2.

Under the Paperwork Reduction Act of 1995, no persons are required to respond to a collection of information unless it displays a valid OMB control number.

Instruction Sheet for Petition to Make Special Under the Green Technology Pilot Program

(Not to be Submitted to the USPTO)

The following is a summary of the requirements (for more information see the notices (i) "Pilot Program for Green Technologies Including Greenhouse Gas Reduction," (ii) "Elimination of Classification Requirement in the Green Technology Pilot Program," and (iii) "Expansion and Extension of the Green Technology Pilot Program," available on the USPTO web site at http://www.uspto.gov/patents/init_events/green_tech.jsp):

1) The application must be a non-reissue, non-provisional utility application filed under 35 U.S.C. 111 (a), or an international application that has entered the national stage in compliance with 35 U.S.C. 371, irrespective of the filing date of the application. Reexamination proceedings are excluded from this pilot program.

2) The application must contain three or fewer independent claims and twenty or fewer total claims. The application must not contain any multiple dependent claims. For an application that contains more than three independent claims or twenty total claims, or multiple dependent claims, applicant must file a preliminary amendment in compliance with 37 CFR 1.121 to cancel the excess claims and/or the multiple dependent claims at the time the petition to make special is filed.

3) The claims must be directed to a single invention that materially enhances the quality of the environment, or that materially contributes to: (1) the discovery or development of renewable energy resources; (2) the more efficient utilization and conservation of energy resources; or (3) green house gas emission reduction (see the eligibility requirements of sections II and III of the notice (i) cited above). The petition must include a statement that, if the USPTO determines that the claims are directed to multiple inventions (e.g., in a restriction requirement), applicant will agree to make an election without traverse in a telephonic interview, and elect an invention that meets the eligibility requirements in section II or III of the notice (i) cited above.

4) The petition to make special must be timely filed electronically using the USPTO electronic filing system, EFS-Web, and selecting the document description of "Petition for Green Tech Pilot" on the EFS-Web screen. Applicant should use form PTO/SB/420, which is available as a Portable Document Format (PDF) fillable form in EFS-Web and on the USPTO Web site.

5) The petition to make special must be filed at least one day prior to the date that a first Office action (which may be an Office action containing only a restriction requirement) appears in the Patent Application Information Retrieval (PAIR) system. Applicant may check the status of the application using PAIR.

6) The petition to make special must be accompanied by a request for early publication in compliance with 37 CFR 1.219 and the publication fee set forth in 37 CFR 1.18(d).

Privacy Act Statement

The **Privacy Act of 1974 (P.L. 93-579)** requires that you be given certain information in connection with your submission of the attached form related to a patent application or patent. Accordingly, pursuant to the requirements of the Act, please be advised that: (1) the general authority for the collection of this information is 35 U.S.C. 2(b)(2); (2) furnishing of the information solicited is voluntary; and (3) the principal purpose for which the information is used by the U.S. Patent and Trademark Office is to process and/or examine your submission related to a patent application or patent. If you do not furnish the requested information, the U.S. Patent and Trademark Office may not be able to process and/or examine your submission, which may result in termination of proceedings or abandonment of the application or expiration of the patent.

The information provided by you in this form will be subject to the following routine uses:

1. The information on this form will be treated confidentially to the extent allowed under the Freedom of Information Act (5 U.S.C. 552) and the Privacy Act (5 U.S.C 552a). Records from this system of records may be disclosed to the Department of Justice to determine whether disclosure of these records is required by the Freedom of Information Act.
2. A record from this system of records may be disclosed, as a routine use, in the course of presenting evidence to a court, magistrate, or administrative tribunal, including disclosures to opposing counsel in the course of settlement negotiations.
3. A record in this system of records may be disclosed, as a routine use, to a Member of Congress submitting a request involving an individual, to whom the record pertains, when the individual has requested assistance from the Member with respect to the subject matter of the record.
4. A record in this system of records may be disclosed, as a routine use, to a contractor of the Agency having need for the information in order to perform a contract. Recipients of information shall be required to comply with the requirements of the Privacy Act of 1974, as amended, pursuant to 5 U.S.C. 552a(m).
5. A record related to an International Application filed under the Patent Cooperation Treaty in this system of records may be disclosed, as a routine use, to the International Bureau of the World Intellectual Property Organization, pursuant to the Patent Cooperation Treaty.
6. A record in this system of records may be disclosed, as a routine use, to another federal agency for purposes of National Security review (35 U.S.C. 181) and for review pursuant to the Atomic Energy Act (42 U.S.C. 218(c)).
7. A record from this system of records may be disclosed, as a routine use, to the Administrator, General Services, or his/her designee, during an inspection of records conducted by GSA as part of that agency's responsibility to recommend improvements in records management practices and programs, under authority of 44 U.S.C. 2904 and 2906. Such disclosure shall be made in accordance with the GSA regulations governing inspection of records for this purpose, and any other relevant (*i.e.*, GSA or Commerce) directive. Such disclosure shall not be used to make determinations about individuals.
8. A record from this system of records may be disclosed, as a routine use, to the public after either publication of the application pursuant to 35 U.S.C. 122(b) or issuance of a patent pursuant to 35 U.S.C. 151. Further, a record may be disclosed, subject to the limitations of 37 CFR 1.14, as a routine use, to the public if the record was filed in an application which became abandoned or in which the proceedings were terminated and which application is referenced by either a published application, an application open to public inspection or an issued patent.
9. A record from this system of records may be disclosed, as a routine use, to a Federal, State, or local law enforcement agency, if the USPTO becomes aware of a violation or potential violation of law or regulation.

UNITED STATES PATENT AND TRADEMARK OFFICE

UNITED STATES DEPARTMENT OF COMMERCE
United States Patent and Trademark Office
Address: COMMISSIONER FOR PATENTS
P.O. Box 1450
Alexandria, Virginia 22313-1450
www.uspto.gov

APPLICATION NO.	FILING DATE	FIRST NAMED INVENTOR	ATTORNEY DOCKET NO.	CONFIRMATION NO.
13/171,683	06/29/2011	Robert Louis Steigerwald	247842 (12764-280)	5932

6147 7590 12/21/2011
GENERAL ELECTRIC COMPANY
GLOBAL RESEARCH
ONE RESEARCH CIRCLE
BLDG. K1-3A59
NISKAYUNA, NY 12309

EXAMINER
FUREMAN, JARED

ART UNIT	PAPER NUMBER
2836	

NOTIFICATION DATE	DELIVERY MODE
12/21/2011	ELECTRONIC

Please find below and/or attached an Office communication concerning this application or proceeding.

The time period for reply, if any, is set in the attached communication.

Notice of the Office communication was sent electronically on above-indicated "Notification Date" to the following e-mail address(es):

ldocket@crd.ge.com
wahld@ge.com
haeckl@ge.com

UNITED STATES PATENT AND TRADEMARK OFFICE

Commissioner for Patents
United States Patent and Trademark Office
P.O. Box 1450
Alexandria, VA 22313-1450
www.uspto.gov

GENERAL ELECTRIC COMPANY
GLOBAL RESEARCH
ONE RESEARCH CIRCLE
BLDG. K1-3A59
NISKAYUNA NY 12309

In re Application of	:	
STEIGERWALD et al.	:	DECISION ON PETITION
Application No. 13/171,683	:	TO MAKE SPECIAL UNDER
Filed: June 29, 2011	:	THE GREEN TECHNOLOGY
Attorney Docket No. 247842 (12764-280)	:	PILOT PROGRAM

This is a decision on the petition under 37 CFR 1.102, filed on November 10, 2011, to make the above-identified application special under the pilot program for applications pertaining to Green Technologies as set forth 74 Federal Register Notice 64666 (December 8, 2009) and amended by 75 Federal Register Notice 28554 (May 21, 2010) and 75 Federal Register Notice 69049 (November 10, 2010).

The petition is **GRANTED**.

A grantable petition to make an application special under 37 CFR 1.102 and the pilot program as set forth in 74 FR 64666 must be directed to a nonprovisional application filed under 35 USC 111(a) or be a national stage entry under 35 USC 371, exclusive of any reissue applications.

In order to qualify for special status, the following requirements must be met. 1) The application must have no more than 3 independent claims and no more than 20 total claims. 2) The application must not contain any multiple dependent claims. 3) The petition must state the basis for seeking special status, i.e., the claimed invention either: A) materially enhances the quality of the environment or B) materially contributes to: i) the discovery or development of renewable energy resources, ii) the more efficient utilization and conservation of energy resources, or iii) greenhouse gas emission reduction. 4) If the disclosure is not clear on its face that the claimed invention materially contributes under category (A) or (B), the petition must be accompanied by a statement by the applicant, assignee, or an attorney/agent registered to practice before the Office explaining how the materiality standard is met. 5) A statement that applicant will agree to make an election without traverse in a telephonic interview if a restriction requirement is made by the examiner. 6) The petition to make special must be filed electronically. 7) The petition must be filed at least one day prior to the date that a first Office Action appears in the Patent Application Information Retrieval (PAIR) system. 8) The petition must be accompanied by a request for early publication in compliance with 37 CFR 1.219 and include the publication fee as set forth in 37 CFR 1.18(d).

The requirement for a fee for consideration of the petition to make special for applications pertaining to Green Technologies has been waived.

The instant petition complies with items 1 – 8 above. Accordingly, the above-identified application has been accorded "special" status.

Telephone inquires concerning this decision should be directed to Colleen Dunn at 571-272-1170.

The application is being forwarded to the appropriate Technology Center Art Unit for action on the merits commensurate with this decision.

/Colleen Dunn/

Colleen Dunn
TQAS, TC 2800

Doc Code: PET.GREEN
Document Description: Petition for Green Tech Pilot

PTO/SB/420 (03-11)

PETITION TO MAKE SPECIAL UNDER THE GREEN TECHNOLOGY PILOT PROGRAM

Attorney Docket Number: 83179653 / FMC 3570 PUS	Application Number (if known): 13/171,887	Filing date: June 29, 2011

First Named Inventor: Hongjie Wu et al.

Title: METHOD AND APPARATUS FOR CHARGING OR DISCHARGING AN ELECTRICAL DEVICE

APPLICANT HEREBY REQUESTS TO PARTICIPATE IN THE GREEN TECHNOLOGY PILOT PROGRAM FOR THE ABOVE-IDENTIFIED APPLICATION. See Instruction Sheet on page 2.

This petition must be timely filed electronically using the USPTO electronic filing system, EFS-Web.

1. By filing this petition:

   Applicant is requesting early publication: Applicant hereby requests early publication under 37 CFR 1.219 and the publication fee set forth in 37 CFR 1.18(d) accompanies this request.

2. By filing this petition: applicant is agreeing to make an election without traverse in a telephonic interview and elect an invention that meets the eligibility requirements for the Green Technology Pilot Program, if the Office determines that the claims are not obviously directed to a single invention. See Instruction Sheet.

3. This request is accompanied by statements of special status for the eligibility requirement.

4. The application contains no more than three (3) independent claims and twenty (20) total claims.

5. The application does not contain any multiple dependent claims.

6. Other attachments: _____

Signature /Andrew B. Turner/	Date 12-08-2011
Name (Print/Typed) Andrew B. Turner	Registration Number 63121

Note: *Signatures of all the inventors or assignees of record of the entire interest or their representative(s) are required in accordance with 37 CFR 1.33 and 11.18. Please see 37 CFR 1.4(d) for the form of the signature. If necessary, submit multiple forms for more than one signature, see below*.*

■ *Total of 1 forms are submitted.

If you need assistance in completing the form, call 1-800-PTO-9199 and select option 2.

Instruction Sheet for
Petition to Make Special Under the Green Technology Pilot Program

(Not to be Submitted to the USPTO)

The following is a summary of the requirements (for more information see the notices (i) "Pilot Program for Green Technologies Including Greenhouse Gas Reduction," (ii) "Elimination of Classification Requirement in the Green Technology Pilot Program," and (iii) "Expansion and Extension of the Green Technology Pilot Program," available on the USPTO web site at http://www.uspto.gov/patents/init_events/green_tech.jsp):

(1) The application must be a non-reissue, non-provisional utility application filed under 35 U.S.C. 111(a), or an international application that has entered the national stage in compliance with 35 U.S.C. 371, irrespective of the filing date of the application. Reexamination proceedings are excluded from this pilot program.

(2) The application must contain three or fewer independent claims and twenty or fewer total claims. The application must not contain any multiple dependent claims. For an application that contains more than three independent claims or twenty total claims, or multiple dependent claims, applicant must file a preliminary amendment in compliance with 37 CFR 1.121 to cancel the excess claims and/or the multiple dependent claims at the time the petition to make special is filed.

(3) The claims must be directed to a single invention that materially enhances the quality of the environment, or that materially contributes to: (1) the discovery or development of renewable energy resources; (2) the more efficient utilization and conservation of energy resources; or (3) green house gas emission reduction (see the eligibility requirements of sections II and III of the notice (i) cited above). The petition must include a statement that, if the USPTO determines that the claims are directed to multiple inventions (e.g., in a restriction requirement), applicant will agree to make an election without traverse in a telephonic interview, and elect an invention that meets the eligibility requirements in section II or III of the notice (i) cited above.

(4) The petition to make special must be timely filed electronically using the USPTO electronic filing system, EFS-Web, and selecting the document description of "Petition for Green Tech Pilot" on the EFS-Web screen. Applicant should use form PTO/SB/420, which is available as a Portable Document Format (PDF) fillable form in EFS-Web and on the USPTO Web site.

(5) The petition to make special must be filed at least one day prior to the date that a first Office action (which may be an Office action containing only a restriction requirement) appears in the Patent Application Information Retrieval (PAIR) system. Applicant may check the status of the application using PAIR.

(6) The petition to make special must be accompanied by a request for early publication in compliance with 37 CFR 1.219 and the publication fee set forth in 37 CFR 1.18(d).

Privacy Act Statement

The **Privacy Act of 1974 (P.L. 93-579)** requires that you be given certain information in connection with your submission of the attached form related to a patent application or patent. Accordingly, pursuant to the requirements of the Act, please be advised that: (1) the general authority for the collection of this information is 35 U.S.C. 2(b)(2); (2) furnishing of the information solicited is voluntary; and (3) the principal purpose for which the information is used by the U.S. Patent and Trademark Office is to process and/or examine your submission related to a patent application or patent. If you do not furnish the requested information, the U.S. Patent and Trademark Office may not be able to process and/or examine your submission, which may result in termination of proceedings or abandonment of the application or expiration of the patent.

The information provided by you in this form will be subject to the following routine uses:

1. The information on this form will be treated confidentially to the extent allowed under the Freedom of Information Act (5 U.S.C. 552) and the Privacy Act (5 U.S.C 552a). Records from this system of records may be disclosed to the Department of Justice to determine whether disclosure of these records is required by the Freedom of Information Act.
2. A record from this system of records may be disclosed, as a routine use, in the course of presenting evidence to a court, magistrate, or administrative tribunal, including disclosures to opposing counsel in the course of settlement negotiations.
3. A record in this system of records may be disclosed, as a routine use, to a Member of Congress submitting a request involving an individual, to whom the record pertains, when the individual has requested assistance from the Member with respect to the subject matter of the record.
4. A record in this system of records may be disclosed, as a routine use, to a contractor of the Agency having need for the information in order to perform a contract. Recipients of information shall be required to comply with the requirements of the Privacy Act of 1974, as amended, pursuant to 5 U.S.C. 552a(m).
5. A record related to an International Application filed under the Patent Cooperation Treaty in this system of records may be disclosed, as a routine use, to the International Bureau of the World Intellectual Property Organization, pursuant to the Patent Cooperation Treaty.
6. A record in this system of records may be disclosed, as a routine use, to another federal agency for purposes of National Security review (35 U.S.C. 181) and for review pursuant to the Atomic Energy Act (42 U.S.C. 218(c)).
7. A record from this system of records may be disclosed, as a routine use, to the Administrator, General Services, or his/her designee, during an inspection of records conducted by GSA as part of that agency's responsibility to recommend improvements in records management practices and programs, under authority of 44 U.S.C. 2904 and 2906. Such disclosure shall be made in accordance with the GSA regulations governing inspection of records for this purpose, and any other relevant (*i.e.*, GSA or Commerce) directive. Such disclosure shall not be used to make determinations about individuals.
8. A record from this system of records may be disclosed, as a routine use, to the public after either publication of the application pursuant to 35 U.S.C. 122(b) or issuance of a patent pursuant to 35 U.S.C. 151. Further, a record may be disclosed, subject to the limitations of 37 CFR 1.14, as a routine use, to the public if the record was filed in an application which became abandoned or in which the proceedings were terminated and which application is referenced by either a published application, an application open to public inspection or an issued patent.
9. A record from this system of records may be disclosed, as a routine use, to a Federal, State, or local law enforcement agency, if the USPTO becomes aware of a violation or potential violation of law or regulation.

UNITED STATES PATENT AND TRADEMARK OFFICE

UNITED STATES DEPARTMENT OF COMMERCE
United States Patent and Trademark Office
Address: COMMISSIONER FOR PATENTS
P.O. Box 1450
Alexandria, Virginia 22313-1450
www.uspto.gov

APPLICATION NO.	FILING DATE	FIRST NAMED INVENTOR	ATTORNEY DOCKET NO.	CONFIRMATION NO.
13/171,887	06/29/2011	Hongjie Wu	83179653	6294

28395 7590 12/20/2011
BROOKS KUSHMAN P.C./FGTL
1000 TOWN CENTER
22ND FLOOR
SOUTHFIELD, MI 48075-1238

EXAMINER
FUREMAN, JARED

ART UNIT	PAPER NUMBER
2836	

MAIL DATE	DELIVERY MODE
12/20/2011	PAPER

Please find below and/or attached an Office communication concerning this application or proceeding.

The time period for reply, if any, is set in the attached communication.

UNITED STATES PATENT AND TRADEMARK OFFICE

Commissioner for Patents
United States Patent and Trademark Office
P.O. Box 1450
Alexandria, VA 22313-1450
www.uspto.gov

BROOKS KUSHMAN P.C./FGTL
1000 TOWN CENTER
22ND FLOOR
SOUTHFIELD MI 48075-1238

In re Application of	:	
WU et al.	:	DECISION ON PETITION
Application No. 13/171,887	:	TO MAKE SPECIAL UNDER
Filed: June 29, 2011	:	THE GREEN TECHNOLOGY
Attorney Docket No. 83179653	:	PILOT PROGRAM

This is a decision on the petition under 37 CFR 1.102, filed on December 9, 2011, to make the above-identified application special under the pilot program for applications pertaining to Green Technologies as set forth 74 Federal Register Notice 64666 (December 8, 2009) and amended by 75 Federal Register Notice 28554 (May 21, 2010) and 75 Federal Register Notice 69049 (November 10, 2010).

The petition is **GRANTED**.

A grantable petition to make an application special under 37 CFR 1.102 and the pilot program as set forth in 74 FR 64666 must be directed to a nonprovisional application filed under 35 USC 111(a) or be a national stage entry under 35 USC 371, exclusive of any reissue applications.

In order to qualify for special status, the following requirements must be met. 1) The application must have no more than 3 independent claims and no more than 20 total claims. 2) The application must not contain any multiple dependent claims. 3) The petition must state the basis for seeking special status, i.e., the claimed invention either: A) materially enhances the quality of the environment or B) materially contributes to: i) the discovery or development of renewable energy resources, ii) the more efficient utilization and conservation of energy resources, or iii) greenhouse gas emission reduction. 4) If the disclosure is not clear on its face that the claimed invention materially contributes under category (A) or (B), the petition must be accompanied by a statement by the applicant, assignee, or an attorney/agent registered to practice before the Office explaining how the materiality standard is met. 5) A statement that applicant will agree to make an election without traverse in a telephonic interview if a restriction requirement is made by the examiner. 6) The petition to make special must be filed electronically. 7) The petition must be filed at least one day prior to the date that a first Office Action appears in the Patent Application Information Retrieval (PAIR) system. 8) The petition must be accompanied by a request for early publication in compliance with 37 CFR 1.219 and include the publication fee as set forth in 37 CFR 1.18(d).

The requirement for a fee for consideration of the petition to make special for applications pertaining to Green Technologies has been waived.

The instant petition complies with items 1 – 8 above. Accordingly, the above-identified application has been accórded "special" status.

Telephone inquires concerning this decision should be directed to Colleen Dunn at 571-272-1170.

The application is being forwarded to the appropriate Technology Center Art Unit for action on the merits commensurate with this decision.

/Colleen Dunn/

Colleen Dunn
TQAS, TC 2800

UNITED STATES PATENT AND TRADEMARK OFFICE

Commissioner for Patents
United States Patent and Trademark Office
P.O. Box 1450
Alexandria, VA 22313-1450
www.uspto.gov

MAILED

DEC 14 2011

OFFICE OF PETITIONS

Foley & Lardner LLP
Suite 500
3000 K STREET NW
Washington DC 20007

In re Application of	:	
Malcolm Abbott, Maxim Kelman, Eric	:	DECISION REFUSING STATUS
Rosenfeld, Elena Rogojina and Giuseppe	:	UNDER 37 CFR 1.47(a)
Scardera	:	
Application No. 13/172,040	:	
Filed: June 29, 2011	:	
Attorney Dkt. 040897-0301	:	
For: METHODS OF FORMING A	:	
FLOATING JUNCTION ON A SOLAR CELL	:	
WITH A PARTICLE MASKING LAYER	:	

This is in response to the petition under 37 CFR 1.47(a), filed December 6, 2011.

The petition is **GRANTED.**

Petitioner has shown that the non-signing inventor Rosenfeld has refused to join in the filing of the above-identified application.

The application and papers have been reviewed and found in compliance with 37 CFR 1.47(a). This application is hereby accorded Rule 1.47(a) status.

As provided in 37 CFR 1.47(c), this Office will forward notice of this application's filing to the non-signing inventor at the address given in the petition. Notice of the filing of this application will also be published in the Official Gazette.

To the extent the address in the petition is the last known address of inventor Rosenfeld, a signed supplemental application data sheet should be used to update the address.

This application is being referred to the Office of Patent Application processing for processing in the normal course of business.

Telephone inquiries should be directed to the undersigned at (571) 272-3215.

Charlema Grant

Charlema Grant
Attorney Advisor
Office of Petitions

UNITED STATES PATENT AND TRADEMARK OFFICE

Commissioner for Patents
United States Patent and Trademark Office
P.O. Box 1450
Alexandria, VA 22313-1450
www.uspto.gov

MAILED

DEC 14 2011

OFFICE OF PETITIONS

Eric Rosenfeld
605 NE Newport Drive
Lees Summit, Missouri 64064-2045

In re Application of
Malcolm Abbott, Maxim Kelman, Eric Rosenfeld,
Elena Rogojina and Giuseppe Scardera
Application No. 13/172,040
Filed: June 29, 2011
Attorney Dkt. 040897-0301
For: METHODS OF FORMING A FLOATING JUNCTION ON A SOLAR CELL WITH A PARTICLE MASKING LAYER

Dear Sir:

You are named as a joint inventor in the above-identified United States patent application, filed under the provisions of 35 U.S.C. 116 (United States Code), and 37 CFR 1.47(a), Rules of Practice in Patent Cases. Should a patent be granted on the application you will be designated therein as a co-inventor.

As a named inventor you are entitled to inspect any paper in the file wrapper of the application, order copies of all or any part thereof (at a prepaid cost per 37 CFR 1.19) or make your position of record in the application. Alternatively, you may arrange to do any of the preceding through a registered patent attorney or agent presenting written authorization from you. If you care to join the application, counsel of record (see below) would presumably assist you. Joining the application would entail the filing of an appropriate oath or declaration by you pursuant to 37 CFR 1.63.

Telephone inquiries regarding this communication should be directed to the undersigned at (571) 272-3215. Requests for information regarding your application should be directed to the File Information Unit at (703) 308-2733. Information regarding how to pay for and order a copy of the application, or a specific paper in the application, should be directed to the Certification Division at (571) 272-3150 or 1 (800) 972-6382 (outside the Washington, DC area).

Charlema Grant
Attorney Advisor
Office of Petitions

cc: Foley & Lardner LLP
Suite 500
3000 K STREET NW
Washington DC 20007

Eric Rosen, 160 Pasito Terrace, APT 716, Sunnyvale, CA 94086

UNITED STATES PATENT AND TRADEMARK OFFICE

UNITED STATES DEPARTMENT OF COMMERCE
United States Patent and Trademark Office
Address: COMMISSIONER FOR PATENTS
P.O. Box 1450
Alexandria, Virginia 22313-1450
www.uspto.gov

APPLICATION NO.	FILING DATE	FIRST NAMED INVENTOR	ATTORNEY DOCKET NO.	CONFIRMATION NO.
13/172,116	06/29/2011	Christopher M. Hanna	56233-406 (THTK-3DVCON7)	6706

23630 7590 08/05/2011
McDermott Will & Emery
600 13th Street, NW
Washington, DC 20005-3096

EXAMINER
LEE, PING

ART UNIT	PAPER NUMBER
2614	

NOTIFICATION DATE	DELIVERY MODE
08/05/2011	ELECTRONIC

Please find below and/or attached an Office communication concerning this application or proceeding.

The time period for reply, if any, is set in the attached communication.

Notice of the Office communication was sent electronically on above-indicated "Notification Date" to the following e-mail address(es):

mweipdocket@mwe.com

UNITED STATES PATENT AND TRADEMARK OFFICE

Commissioner for Patents
United States Patent and Trademark Office
P.O. Box 1450
Alexandria, VA 22313-1450
www.uspto.gov

McDermott Will & Emery
600 13th Street, NW
Washington DC 20005-3096

In re Application of: HANNA, CHRISTOPHER M. Serial No.: 13/172,116 Filed: June 29, 2011 Title: **BTSC ENCODER**	DECISION ON PETITION TO MAKE SPECIAL FOR NEW APPLICATION UNDER 37 C.F.R. § 1.102 & M.P.E.P. § 708.02

This is a decision on the petition filed on June 29, 2011, to make the above-identified application special for accelerated examination procedure under 37 C.F.R. § 1.102(d).

The petition to make the application special is **DISMISSED**.

REGULATION AND PRACTICE

A grantable petition to make special under 37 C.F.R. § 1.102(d) and pursuant to the "Change to Practice for Petitions in Patent Applications to Make Special and for Accelerated Examination" published in the Federal Register on June 26, 2006 (71 Fed. Reg. 36323), must satisfy the following conditions:

I. Conditions Regarding the Application:

1. the application must be a non-reissue utility or design application filed under 37 CFR 1.111(a);
2. the application, the petition and the required fees must be filed electronically using the USPTO's electronic filing system (EFS), or EFS-web; if not filed electronically, a statement asserting that EFS and EFS-web were not available during the normal business hours.
3. at the time of filing, the application must be complete under 37 CFR 1.51 and in condition for examination;
4. the application must contain three or fewer independent claims and twenty or fewer total claims and the claims must be directed to a single invention. Multiple dependent claims are not permitted.

II. Conditions Regarding the Petition:

The petition must:

1. be filed with the application;

2. include a statement that applicant agrees not to separately argue the patentability of any independent claim during any appeal in the application;

3. include a statement that applicant agrees to make an election without traverse in a telephone interview.

4. include a statement that applicant agrees to conduct such an interview when requested by the examiner.

5. include a statement, made based on a good faith belief, that a preexamination search in compliance with the following requirements, was conducted, including an identification of the filed of search by United States class and subclass, where applicable, and for database searches, the search logic or chemical structure or sequence used as a query, the name of the file(s) searched and the database service, and the date of the search.

The preexamination search must:

5.1 involve U.S. patents and patent application publications, foreign patent documents, and non-patent literature, unless the applicant can justify with reasonable certainty that no references more pertinent than those already identified are likely to be found in the eliminated sources and includes such a justification with this statement;

5.2. be directed to the claimed invention and encompass all of the features of the claims, giving the claims the broadest reasonable interpretation;

5.3. encompass the disclosed features that may be claimed.

6. must provide in support of the petition an accelerated examination support document. An accelerated examination support document must include:

6.1. an information disclosure statement (IDS) in compliance with 37 CFR 1.98 citing each reference deemed most closely related to the subject matter of each of the claims;

6.2. an identification of all the limitations in the claims that are disclosed by the reference specifying where the limitation is disclosed in the cited reference;

6.3. a detailed explanation of how each of the claims are patentable over the references cited with particularity required by 37 CFR 1.111(b) and (c);

6.4. a concise statement of the utility of the invention as defined in each of the independent claims (unless the application is a design application);

6.5. a showing of where each limitation of the claims finds support under 35 USC 112, first paragraph, in the written description of the specification. If applicable, the showing must also identify: (1) each means- (or step) plus-function claim element that invokes consideration under 35 USC 112, sixth paragraph; and (2) the structure, material, or acts in the specification that corresponds to each means- (or step) plus-function claim element that invokes consideration under 35 USC 112, sixth paragraph; if the application claims the benefit of one or more applications under title 35, United States Code, the showing must also include where each limitation of the claims finds support under 35 USC 112, first paragraph, in each such application in which such supports exists;

6.6. an identification of any cited references that may be disqualified under 35 USC 103(c).

REVIEW OF FACTS

The petition fails to comply with the conditions set forth under section II items 5.2 and 5.3.

For the reason cited above, the petition fails to meet the required conditions to be accorded special status under the accelerated examination procedure.

Regarding the requirements in section II items 5.2 and 5.3 above, additional search is required in classes 381/106-108 and 348/738. If applicable prior art is discovered in this new search, a revised support document must be provided meeting the requirements of section II, items 6.1-6.3 above.

DECISION

For the above-stated reasons, the petition is **dismissed**. The application will therefore be taken up by the examiner for action in its regular turn.

Petitioner is given a single opportunity to perfect the petition. Any request for reconsideration of this decision must be submitted within 1 (one) month or 30 (thirty) days, whichever is longer, (no extension of time under 37 CFR 1.136(a)) from the date of this decision in order to be considered timely. Any request for reconsideration must address the deficiencies indicated above.

Petitioner is reminded that, upon granting of the special status of the application on request for reconsideration, the application will be processed expeditiously. However, due to the dismissal of the instant petition, examination may not be completed within twelve months of the filing date of the application.

Any inquiry regarding this decision should be directed to Ken Wieder, Quality Assurance Specialist, at (571) 272-2986.

/Kenneth A. Wieder/

Kenneth A. Wieder
Quality Assurance Specialist
Technology Center 2600
Communications

UNITED STATES PATENT AND TRADEMARK OFFICE

UNITED STATES DEPARTMENT OF COMMERCE
United States Patent and Trademark Office
Address: COMMISSIONER FOR PATENTS
P.O. Box 1450
Alexandria, Virginia 22313-1450
www.uspto.gov

APPLICATION NO.	FILING DATE	FIRST NAMED INVENTOR	ATTORNEY DOCKET NO.	CONFIRMATION NO.
13/172,116	06/29/2011	Christopher M. Hanna	56233-406 (THTK-3DVCON7)	6706

23630 7590 09/08/2011
McDermott Will & Emery
600 13th Street, NW
Washington, DC 20005-3096

EXAMINER
LEE, PING

ART UNIT	PAPER NUMBER
2614	

NOTIFICATION DATE	DELIVERY MODE
09/08/2011	ELECTRONIC

Please find below and/or attached an Office communication concerning this application or proceeding.

The time period for reply, if any, is set in the attached communication.

Notice of the Office communication was sent electronically on above-indicated "Notification Date" to the following e-mail address(es):

mweipdocket@mwe.com

UNITED STATES PATENT AND TRADEMARK OFFICE

Commissioner for Patents
United States Patent and Trademark Office
P.O. Box 1450
Alexandria, VA 22313-1450
www.uspto.gov

McDermott Will & Emery
600 13th Street, NW
Washington DC 20005-3096

In re Application of: HANNA, CHRISTOPHER M. Serial No.: 13/172,116 Filed: June 29, 2011 Title: **BTSC ENCODER**	DECISION ON PETITION TO MAKE SPECIAL FOR NEW APPLICATION UNDER 37 C.F.R. § 1.102 & M.P.E.P. § 708.02

The petition requesting reconsideration to make the application special filed September 6, 2011 is **GRANTED**.

The application is eligible for accelerated examination and the petition complies with the conditions for granting the application special status pursuant to the "Change to Practice for Petitions in Patent Applications to Make Special and for Accelerated Examination" published June 26, 2006, in the Federal Register. (71 Fed. Reg. 36323).

The prosecution of the instant application will be conducted expeditiously according to the following guidelines.

1. The application will be docketed to an examiner and taken up for action within two weeks of the date of this decision.

2. Restriction Practice:
   If the examiner determines that the claims are not directed to a single invention, a telephone request to elect one single invention will be made pursuant to MPEP 812.01. As a prerequisite to the grant of this petition, the applicant has agreed to make an oral election, by telephone, without traverse. If the applicant refuses to make an election without traverse, or the examiner cannot reach the applicant after a reasonable effort, the examiner will treat the first claimed invention (invention defined by claim 1) as having being constructively elected without traverse for examination.

3. Office action:

If it is determined that, after appropriate consultation, there is a potential rejection or any other issue to be addressed, the examiner will telephone the applicant and arrange an interview to discuss and resolve the issue. An Office action, other than a Notice of Allowance and Fee(s) Due (Notice of Allowance), will not be issued unless either: 1) an interview was conducted but did not result in agreed to action that places the application in condition for allowance, or, 2) a determination is made that an interview would be unlikely to result in the application being placed in condition for allowance, and 3) an internal conference has been held to review any rejection of any claim.

4. Time for Reply:
An Office action other than a Notice of Allowance or a final Office action will set a shortened statutory period of one month or thirty days, whichever is longer, for reply with no extension of time available under 37 CFR 1.136(a). Failure to timely file a reply within this non-extendible period for reply will result in the abandonment of the application.

5. Reply by Applicant:
A timely reply to an Office action other than the Notice of Allowance must be submitted electronically via EFS or EFS-web and limited to addressing the rejections, objections and requirement made. Any amendment that attempts to: 1) add claims which would result in more than three pending independent claims or more than twenty pending total claims; 2) present claims not encompassed by the pre-examination search or an updated accelerated examination support document; or 3) present claims that are directed a non-elected invention or an invention other than that previously claimed and examined in the application, will be treated as not fully responsive and will not be entered.

   For any amendment to the claims (including any new claim) that is not encompassed by the accelerated examination support document, applicant must provide an updated accelerated examination support document that encompasses the amended or new claims at the time of filing of the amendment.

   To proceed expeditiously with the examination, it is recommended that a reply with amendments made to any claim or with any new claim being added be accompanied by an updated accelerated examination support document or a statement explaining how the amended or new claim is supported by the original accelerated examination support document.

6. Information Disclosure Statement (IDS):
Any IDS filed during prosecution must be submitted electronically via EFS or EFS-web, accompanied by an updated accelerated examination support document, and be in compliance with 37 CFR 1.97 and 1.98.

7. Post-Allowance Processing:
To expedite processing of the allowed application into a patent, the applicant must: 1) pay the required fees within one month of the date of the Notice of Allowance, and 2) not

file any post allowance papers not required by the Office. In no event may the issue fee be paid and accepted later than three months from the date of the Notice of Allowance.

8. After-Final and Appeal Procedures:
   To expedite prosecution, after receiving the final Office action, applicant must: 1) promptly file a notice of appeal, an appeal brief and appeal fees; and 2) not request a pre-appeal brief conference.

   Any amendment, affidavit or other evidence filed after final Office action must comply with applicable rules and the requirements outlined in numbered paragraphs 5 and 6 above.

   On appeal, the application will proceed according to normal appeal procedures. After appeal, the application will again be treated special.

9. Proceedings Outside the Normal Examination Process:
   If the application becomes involved in a proceeding that is outside the normal examination process (e.g., a secrecy order, national security review, interference proceeding, petitions under 37 CFR 1.181, 182 or 183), the application will be treated special before and after such proceeding.

10. Final Disposition:
    The twelve month goal of this accelerated examination procedure ends with a final disposition. The mailing of a final Office action, a Notice of Allowance, the filing of a Notice of Appeal, or the filing of a Request for Continued Examination (RCE) is the final disposition.

If, during prosecution, a paper is not filed electronically using EFS-web, a reply is filed but is not fully responsive, the application is involved in an appeal, or a proceeding outside normal examination process, the application will still be examined expeditiously, however, the final disposition may occur more than twelve months from the filing of the application.

Any inquiry regarding this decision should be directed to Ken Wieder, Quality Assurance Specialist, at (571) 272-2986.

/Kenneth A. Wieder/

Kenneth A. Wieder
Quality Assurance Specialist
Technology Center 2600
Communications

UNITED STATES PATENT AND TRADEMARK OFFICE

Commissioner for Patents
United States Patent and Trademark Office
P.O. Box 1450
Alexandria, VA 22313-1450
www.uspto.gov

PETER G. CARROLL
MEDLEN & CARROLL, LLP
SUITE 350
101 HOWARD STREET
SAN FRANCISCO CA 94105

MAILED

DEC 21 2011

OFFICE OF PETITIONS

In re Application of
Vladislav B. Bergo et al.
Application No. 13/172,164
Filed: June 29, 2011
Attorney Docket No. AMBER-17154

: DECISION ACCORDING STATUS UNDER 37 CFR 1.47(a)

This is in response to the petition filed December 12, 2011 under 37 CFR 1.47(a).

The petition is **DISMISSED**.

Rule 47 applicant is given TWO MONTHS from the mailing date of this decision to respond, correcting the below-noted deficiencies. Any response should be entitled "Request for Reconsideration of Petition Under 37 CFR 1.47(a)" and may include an oath or declaration executed by the inventor. **Failure to respond will result in abandonment of the application.** Any extensions of time will be governed by 37 CFR 1.136(a).

The above-identified application was filed on June 29, 2011 2 with an unexecuted Oath or Declaration. Accordingly, a Notice to File Missing Parts was mailed July 14, 2011. In response thereof, the instant petition was filed with an Oath executed by all joint inventors except Vladislav B. Bergo and a three month extension of time, seeking status under 37 CFR 1.47, due to the refusal of the non-signing inventor to cooperate with the filing of the instant application.

A grantable petition under 37 CFR 1.47(a) requires: (1) proof that the non-signing inventor cannot be reached or refuses to sign the oath or declaration after having been presented with the application papers (specification, claims and drawings); (2) an acceptable oath or declaration in compliance with 35 U.S.C. §§ 115 and 116; (3) the petition fee; and (4) a statement of the last known address of the non-signing inventor.

The present petition lacks items (4).

While the petition bears proof that the application papers were forwarded to Dr. Bergo, a statement of the last known address of joint inventor Bergo has not been provided as

required by 37 CFR 1.47. Petitioners must provide a statement of the last known address of the nonsigning inventor. That address should be the last known address at which the inventor customarily receives mail. Ordinarily, the last known address will be the last known residence of the nonsigning inventor.

Status under 37 CFR 1.47(a) cannot be accorded this application until such time as the last known address has been provided with a request for reconsideration.

Additionally, petitioner is advised that the fee for a petition under 37 CFR 1.47 is set at $200 not $130 as indicated in the petition. As such, per the authorization included with the petition, deposit account no. 08-1290 has been charged in the amount of $70 to make up the difference between that which was paid and that which was due.

Before the petition can be granted, the above listed deficiencies must be cured in a request for reconsideration.

Further correspondence with respect to this matter should be addressed as follows:

By mail: Mail Stop Petition
P.O. Box 1450
Alexandria, VA 22313-1450

By FAX: (571) 273-8300

Telephone inquiries concerning this matter may be directed to the undersigned Petitions Attorney at (571) 272-3212.

Patricia Faison-Ball

Patricia Faison-Ball
Senior Petitions Attorney
Office of Petitions

UNITED STATES PATENT AND TRADEMARK OFFICE

Commissioner for Patents
United States Patent and Trademark Office
P.O. Box 1450
Alexandria, VA 22313-1450
www.uspto.gov

PETER G. CARROLL
MEDLEN & CARROLL, LLP
SUITE 350
101 HOWARD STREET
SAN FRANCISCO CA 94105

MAILED
JAN 09 2012
OFFICE OF PETITIONS

In re Application of	:
Vladislav B. Bergo et al.	:
Application No. 13/172,164	: DECISION ACCORDING STATUS
Filed: June 29, 2011	: UNDER 37 CFR 1.47(a)
Attorney Docket No. AMBER-17154	:

This is in response to the renewed petition filed December 30, 2011 under 37 CFR 1.47(a)[1].

The petition is **GRANTED**.

The above-identified application was filed on June 29, 2011 2 with an unexecuted Oath or Declaration. Accordingly, a Notice to File Missing Parts was mailed July 14, 2011. In response thereof, the instant petition was filed with an Oath executed by all joint inventors except Vladislav B. Bergo and a three month extension of time, seeking status under 37 CFR 1.47, due to the refusal of the non-signing inventor to cooperate with the filing of the instant application. The petition was dismissed in a decision mailed December 21, 2011 because the petition lacked compliance with 37 CFR 1.47(a)(4).

Comes now petitioner with the instant renewed petition and the last known address of non-signing inventor Vladislav B. Bergo.

The petition bears proof that the application papers were sent via email to Dr. Bergo. The evidence submitted also establishes that the email was in fact received by the non-signing inventor but that to date, he has failed to return an executed copy of the oath or declaration.

The above-identified application and papers have been reviewed and found in compliance with 37 CFR 1.47(a). In view thereof, this application is hereby accorded Rule 1.47(a) status.

[1] A grantable petition under 37 CFR 1.47(a) requires: (1) proof that the non-signing inventor cannot be reached or refuses to sign the oath or declaration after having been presented with the application papers (specification, claims and drawings); (2) an acceptable oath or declaration in compliance with 35 U.S.C. §§ 115 and 116; (3) the petition fee; and (4) a statement of the last known address of the non-signing inventor.

Thus, as provided in Rule 1.47c, this Office will forward notice of this application's filing to the non-signing inventor at the address given in the petition. Notice of the filing of this application will also be published in the Official Gazette.

This matter is being referred to the Office of Data Management for further pre-examination processing.

Telephone inquiries concerning this matter may be directed to the undersigned Petitions Attorney at (571) 272-3212.

Patricia Faison-Ball
Senior Petitions Attorney
Office of Petitions

IN THE UNITED STATES PATENT AND TRADEMARK OFFICE

In re Application of:	)	
Stephen G. Kimmet	)	Group Art Unit: 3612
	)	
Serial No.: 13/172,213	)	Examiner:
	)	
Filing Date: June 29, 2011	)	Applicant No.: V/O2 – Pro Se
	)	
For: Vehicle Openings	)	
	)	

August 28, 2011

Commissioner for Patents
Alexandria, VA 22313-1450

PETITION TO MAKE SPECIAL UNDER GREEN TECHNOLOGY PILOT PROGRAM

Honorable Sir:

Applicant respectfully requests to petition to make special the above-indicated application under the green technology pilot program. In compliance with the requirements associated with this program, Applicant requests early publication in compliance with 37 CFR 1.219 and charges the publication fee set forth in 37 CFR 1.18(d) to applicant's credit card. Please charge any additional fees to this credit card.

As detailed in the subject application, Applicant offers at least the following reasons why the application should be considered under the green technology pilot program. These details have been taken directly from page 22, line 8 to page 26, line 7 of the subject application.

"SUVs, minivans, and pickup trucks, like those depicted in Figs. 1, 4A, 4B, and 5 are known to provide much utility to owners, for example, for hauling cargo. Unfortunately, this utility comes at the expense of low vehicle miles per gallon, which translates into using more gasoline, diesel fuel, and other energy resources and, consequently, more pollution with the emission of more greenhouse gases.

In addition, this utility of the SUVs, minivans, and pickup trucks comes at a time when energy costs are very high and purchase prices for SUVs and trucks are also very high. Using more resources for larger vehicles that use more energy per miles traveled is a detriment to the quality of the environment and a waste of money in general. Currently, the world is in need of more "green" vehicles and more conservation of the world's energy resources. Experts in the fields of the environment, energy, vehicle design, and the economy are looking for ways to reduce this waste of the world's energy resources and to lower costs of the vehicles so as to provide better ways for societies to function on a global scale.

On the other hand, current sedans do not provide the utility for hauling cargo like SUVs and pickup trucks. However, with the above detailed sedan trunk lids 34, 74, 74', 74'', 74''', 74'''', 78, gates 73, 73', 73'', 73''', 110, trunk beds 77, 77', ridges 77a, and body panels 75, 75'', the present invention provides significant additional utility at a significantly lower initial purchase price for a sedan when compared to SUVs, minivans, and pickup trucks. In addition, the 2 or 4 door sedans 30, 40, 70, 70' of the present invention with at least these features 34, 74, 74',

74", 74"', 74"", 78, 73, 73', 73", 73"', 110, 77, 77', 77a, 75, 75', 75", 75"' can provide this utility with lower continual energy operating expenditures (e.g., better miles per gallon or miles per electrical charge) and consequently less greenhouse emissions, when compared to SUVs and trucks.

Other capabilities that the features 32, 34, 42, 45, 53, 54, 59'a, 62, 74, 74', 74", 74"', 74"", 78, 73, 73', 73", 73"', 110, 77, 77', 77a, 75, 75', 75", 75"', 80, 88""' of the present invention provide by way of the 2 or 4 door sedans 30, 40, 70, 70' of the present invention, which are not currently being provided, are the ability to provide fold down and hinged rear doors for tailgate parties that are currently only provided by SUVs, minivans, pickup trucks, and other utility vehicles. Such trunk gates 73, 73', 110 and lids 34, 74, 74', 74", 74"', 74"", 78 allow for food and other items to rest horizontally for access at tail gate parties at sporting events, picnics, and other family recreational activities. Also, the pop up trunk gates 73"', 110 provide an "umbrella" effect to block moisture or sunlight when popped up and extended like SUV and minivan rear doors, which is not currently available to sedans.

These capabilities are provided without a higher purchase price that comes with larger utility vehicles and without the higher operating costs that comes with larger utility vehicles. At the same time, such sedans 30, 40, 70, 70' of the present invention retain their stature as family cars, with more luxury than SUVs and pickup trucks, and these vehicles 30, 40, 70, 70' can fit into smaller parking spots (lending to conservation of land) and smaller garages (lending to conservation of building supplies).

These 2 or 4 door sedans 30, 40, 70, 70' are more practical vehicles, while having lower profiles, and are considered more as urban

and suburban vehicles as opposed to work, utility, transport (like minivans), or country vehicles. And yet, the features 32, 34, 42, 45, 53, 54, 59'a, 62, 74, 74', 74'', 74''', 74'''', 78, 73, 73', 73'', 73''', 110, 77, 77', 77a, 75, 75', 75'', 75''', 80, 88''''' if applied to sedans 30, 40, 70, 70' of the present invention, can provide significant amounts of utility that are not currently available to current sedans.

In other words, this invention provides a path to change the paradigm and mindset that bigger is better. Instead, a more streamlined vehicle can provide better gas and charge mileage and much utility without detracting from the environment and wasting valuable resources. As a result of using more sedans, manufacturers can better meet higher mileage standards that are being proposed.

As an example, it is difficult to haul yard waste to proper landfills or to transport a lawn mower, a step ladder, 4 feet by 8 feet sheets of paneling, or other wide, long, heavy, bulky, or dirty items in current sedans. Much time and money is wasted by having such items transported from one place to another by means other than by a sedan, which better thought of in many social circles as a "family car" than say a pickup truck. However, with these features 32, 34, 42, 45, 53, 54, 59'a, 62, 74, 74', 74'', 74''', 74'''', 78, 73, 73', 73'', 73''', 110, 77, 77', 77a, 75, 75', 75'', 75''', 80, 88''''' the 2 or 4 door sedans 30, 40, 70, 70' of the present invention would in and of themselves be capable of providing these capabilities.

Very importantly, by providing the above-mentioned capabilities to the 2 or 4 door sedans 30, 40, 70, 70' of the present invention, vehicle owners are much less likely to own multiple vehicles since they would retain the capabilities of sedans and yet be able to take on many of the

utility capabilities of SUVs, minivans, and pickup trucks. As a result of the sedans 30, 40, 70, 70' of the present invention, there will be less overall money spent on vehicles, fewer vehicles will be purchased, less storage will be needed for vehicles, lower insurance costs due to fewer vehicles being perceived as needed, with less pollution and release of greenhouse gases being realized.

More sedans compared to the combined numbers of SUVs, minivans, and pickup trucks translates into a higher overall miles/gallon or miles/per charge for the entire population of vehicles. This should be a major goal of our society. The present invention will significantly contribute to diminishing the mindset that more powerful and bigger vehicles is a good thing for our society.

Also, there will be fewer vehicles on the roads, there will be fewer vehicles to block vision when backing out of parking spots, there will be better vision while driving since the overall view has less space being taken up by bigger and wider utility vehicles, and there would be fewer accidents, deaths, and lower health care costs associated with any accident, to name a few.

In some groups the vehicular mindset has become "Survival of the Biggest and Most Powerful." To some degree, a sedan with the utility capabilities of the bigger and powerful SUVs, minivans, and pickup trucks will help in changing this wasteful mindset."

If the Commissioner has any questions or concerns, the favor of a telephone call to applicant is requested.

Respectfully submitted,

Stephen G. Kimmet

118 Gross Street
Tiffin, OH 44883
Phone: (419) 448-8974

Doc Code: PET.GREEN
Document Description: Petition for Green Tech Pilot

PTO/SB/420 (03-11)

PETITION TO MAKE SPECIAL UNDER THE GREEN TECHNOLOGY PILOT PROGRAM

Attorney Docket Number: V/O2 - Pro Se	Application Number (if known): 13172213	Filing date: 29-06-2011

First Named Inventor: Stephen G. Kimmet

Title: Vehicle Openings

APPLICANT HEREBY REQUESTS TO PARTICIPATE IN THE GREEN TECHNOLOGY PILOT PROGRAM FOR THE ABOVE-IDENTIFIED APPLICATION. See Instruction Sheet on page 2.

This petition must be timely filed electronically using the USPTO electronic filing system, EFS-Web.

1. By filing this petition:

   Applicant is requesting early publication: Applicant hereby requests early publication under 37 CFR 1.219 and the publication fee set forth in 37 CFR 1.18(d) accompanies this request.

2. By filing this petition: applicant is agreeing to make an election without traverse in a telephonic interview and elect an invention that meets the eligibility requirements for the Green Technology Pilot Program, if the Office determines that the claims are not obviously directed to a single invention. See Instruction Sheet.

3. This request is accompanied by statements of special status for the eligibility requirement.

4. The application contains no more than three (3) independent claims and twenty (20) total claims.

5. The application does not contain any multiple dependent claims.

6. Other attachments: _____

Signature /Stephen G. Kimmet/	Date 28-08-2011
Name (Print/Typed) Stephen G. Kimmet	Registration Number Inventor

Note: *Signatures of all the inventors or assignees of record of the entire interest or their representative(s) are required in accordance with 37 CFR 1.33 and 11.18. Please see 37 CFR 1.4(d) for the form of the signature. If necessary, submit multiple forms for more than one signature, see below*.*

☐ *Total of _____ forms are submitted.

If you need assistance in completing the form, call 1-800-PTO-9199 and select option 2.

Instruction Sheet for
Petition to Make Special Under the Green Technology Pilot Program

(Not to be Submitted to the USPTO)

The following is a summary of the requirements (for more information see the notices (i) "Pilot Program for Green Technologies Including Greenhouse Gas Reduction," (ii) "Elimination of Classification Requirement in the Green Technology Pilot Program," and (iii) "Expansion and Extension of the Green Technology Pilot Program," available on the USPTO web site at http://www.uspto.gov/patents/init_events/green_tech.jsp):

(1) The application must be a non-reissue, non-provisional utility application filed under 35 U.S.C. 111(a), or an international application that has entered the national stage in compliance with 35 U.S.C. 371, irrespective of the filing date of the application. Reexamination proceedings are excluded from this pilot program.

(2) The application must contain three or fewer independent claims and twenty or fewer total claims. The application must not contain any multiple dependent claims. For an application that contains more than three independent claims or twenty total claims, or multiple dependent claims, applicant must file a preliminary amendment in compliance with 37 CFR 1.121 to cancel the excess claims and/or the multiple dependent claims at the time the petition to make special is filed.

(3) The claims must be directed to a single invention that materially enhances the quality of the environment, or that materially contributes to: (1) the discovery or development of renewable energy resources; (2) the more efficient utilization and conservation of energy resources; or (3) green house gas emission reduction (see the eligibility requirements of sections II and III of the notice (i) cited above). The petition must include a statement that, if the USPTO determines that the claims are directed to multiple inventions (e.g., in a restriction requirement), applicant will agree to make an election without traverse in a telephonic interview, and elect an invention that meets the eligibility requirements in section II or III of the notice (i) cited above.

(4) The petition to make special must be timely filed electronically using the USPTO electronic filing system, EFS-Web, and selecting the document description of "Petition for Green Tech Pilot" on the EFS-Web screen. Applicant should use form PTO/SB/420, which is available as a Portable Document Format (PDF) fillable form in EFS-Web and on the USPTO Web site.

(5) The petition to make special must be filed at least one day prior to the date that a first Office action (which may be an Office action containing only a restriction requirement) appears in the Patent Application Information Retrieval (PAIR) system. Applicant may check the status of the application using PAIR.

(6) The petition to make special must be accompanied by a request for early publication in compliance with 37 CFR 1.219 and the publication fee set forth in 37 CFR 1.18(d).

Privacy Act Statement

The **Privacy Act of 1974 (P.L. 93-579)** requires that you be given certain information in connection with your submission of the attached form related to a patent application or patent. Accordingly, pursuant to the requirements of the Act, please be advised that: (1) the general authority for the collection of this information is 35 U.S.C. 2(b)(2); (2) furnishing of the information solicited is voluntary; and (3) the principal purpose for which the information is used by the U.S. Patent and Trademark Office is to process and/or examine your submission related to a patent application or patent. If you do not furnish the requested information, the U.S. Patent and Trademark Office may not be able to process and/or examine your submission, which may result in termination of proceedings or abandonment of the application or expiration of the patent.

The information provided by you in this form will be subject to the following routine uses:

1. The information on this form will be treated confidentially to the extent allowed under the Freedom of Information Act (5 U.S.C. 552) and the Privacy Act (5 U.S.C 552a). Records from this system of records may be disclosed to the Department of Justice to determine whether disclosure of these records is required by the Freedom of Information Act.
2. A record from this system of records may be disclosed, as a routine use, in the course of presenting evidence to a court, magistrate, or administrative tribunal, including disclosures to opposing counsel in the course of settlement negotiations.
3. A record in this system of records may be disclosed, as a routine use, to a Member of Congress submitting a request involving an individual, to whom the record pertains, when the individual has requested assistance from the Member with respect to the subject matter of the record.
4. A record in this system of records may be disclosed, as a routine use, to a contractor of the Agency having need for the information in order to perform a contract. Recipients of information shall be required to comply with the requirements of the Privacy Act of 1974, as amended, pursuant to 5 U.S.C. 552a(m).
5. A record related to an International Application filed under the Patent Cooperation Treaty in this system of records may be disclosed, as a routine use, to the International Bureau of the World Intellectual Property Organization, pursuant to the Patent Cooperation Treaty.
6. A record in this system of records may be disclosed, as a routine use, to another federal agency for purposes of National Security review (35 U.S.C. 181) and for review pursuant to the Atomic Energy Act (42 U.S.C. 218(c)).
7. A record from this system of records may be disclosed, as a routine use, to the Administrator, General Services, or his/her designee, during an inspection of records conducted by GSA as part of that agency's responsibility to recommend improvements in records management practices and programs, under authority of 44 U.S.C. 2904 and 2906. Such disclosure shall be made in accordance with the GSA regulations governing inspection of records for this purpose, and any other relevant (*i.e.*, GSA or Commerce) directive. Such disclosure shall not be used to make determinations about individuals.
8. A record from this system of records may be disclosed, as a routine use, to the public after either publication of the application pursuant to 35 U.S.C. 122(b) or issuance of a patent pursuant to 35 U.S.C. 151. Further, a record may be disclosed, subject to the limitations of 37 CFR 1.14, as a routine use, to the public if the record was filed in an application which became abandoned or in which the proceedings were terminated and which application is referenced by either a published application, an application open to public inspection or an issued patent.
9. A record from this system of records may be disclosed, as a routine use, to a Federal, State, or local law enforcement agency, if the USPTO becomes aware of a violation or potential violation of law or regulation.

UNITED STATES PATENT AND TRADEMARK OFFICE

UNITED STATES DEPARTMENT OF COMMERCE
United States Patent and Trademark Office
Address: COMMISSIONER FOR PATENTS
P.O. Box 1450
Alexandria, Virginia 22313-1450
www.uspto.gov

APPLICATION NO.	FILING DATE	FIRST NAMED INVENTOR	ATTORNEY DOCKET NO.	CONFIRMATION NO.
13/172,213	06/29/2011	Stephen G. Kimmet	V/O2 - Pro Se	6875

7590 09/21/2011
STEPHEN G. KIMMET
118 GROSS STREET
TIFFIN, OH 44883

EXAMINER

ART UNIT	PAPER NUMBER
3612	

MAIL DATE	DELIVERY MODE
09/21/2011	PAPER

Please find below and/or attached an Office communication concerning this application or proceeding.

The time period for reply, if any, is set in the attached communication.

UNITED STATES PATENT AND TRADEMARK OFFICE

Commissioner for Patents
United States Patent and Trademark Office
P.O. Box 1450
Alexandria, VA 22313-1450
www.uspto.gov

SEP 21 2011

STEPHEN G. KIMMET
118 GROSS STREET
TIFFIN OH 44883

In re Application of	:	
STEPHEN G. KIMMET	:	DECISION ON PETITION
Application No. 13/172,213	:	TO MAKE SPECIAL UNDER
Filed: June 29, 2011	:	THE GREEN TECHNOLOGY
Attorney Docket No. V/O2 – Pro Se	:	PILOT PROGRAM

This is a decision on the petition under 37 CFR 1.102, filed August 28, 2011 to make the above-identified application special under the pilot program for applications pertaining to Green Technologies as set forth in 74 Federal Register Notice 64666 (December 8, 2009) and amended by 75 Federal Register Notice 28554 (May 21, 2010) and 75 Federal Register Notice 69049 (November 10, 2010).

The petition is **DISMISSED**.

If reconsideration of this decision is desired, a petition for reconsideration must be filed within ONE (1) MONTH OR THIRTY (30) DAYS from the mail date of this decision, whichever is longer. No extension of this time limit can be granted under 37 CFR 1.136(a) or (b). The petition for reconsideration should include an exhaustive attempt to provide the lacking item(s) noted below, since, after a decision on the petition for reconsideration, no further reconsideration or review of the matter will be undertaken by the Director.

A grantable petition to make an application special under 37 CFR 1.102 and the pilot program as set forth in 74 FR 64666 must be directed to a nonprovisional application filed under 35 USC 111(a) or be a national stage entry under 35 USC 371, exclusive of any reissue applications.

In order to qualify for special status, the following requirements must be met. 1) The application must have no more than 3 independent claims and no more than 20 total claims. 2) The application must not contain any multiple dependent claims. 3) The petition must state the basis for seeking special status, i.e., the claimed invention either: A) materially enhances the quality of the environment or B) materially contributes to: i) the discovery or development of renewable energy resources, ii) the more efficient utilization and conservation of energy resources, or iii) greenhouse gas emission reduction. 4) If the disclosure is not clear on its face that the claimed invention materially contributes under category (A) or (B), the petition must be accompanied by a statement by the applicant, assignee, or an attorney/agent registered to practice before the Office explaining how the materiality standard is met. 5) A statement that applicant will agree to

make an election without traverse in a telephonic interview if a restriction requirement is made by the examiner. 6) The petition to make special must be filed electronically. 7) The petition must be filed at least one day prior to the date that a first Office Action appears in the Patent Application Information Retrieval (PAIR) system. 8) The petition must be accompanied by a request for early publication in compliance with 37 CFR 1.219 and include the publication fee as set forth in 37 CFR 1.18(d).

The requirement for a fee for consideration of the petition to make special for applications pertaining to Green Technologies has been waived.

The petition lacks items 3 and 4.

In regard to item 3, petitioner should note that the instant petition fails to state the basis for the special status (i.e., whether the instant invention (1) materially enhances the quality of the environment or materially contributes to (2) development of renewable energy resources or energy conservation, or (3) greenhouse gas reduction) as required by sections II and III of the notice.

In regard to item 4, the claims are directed to a vehicle body with added openings. While additional openings on door panels or a vehicle body may allow for better access to the interior of a vehicle, said additional openings do not necessarily improve the hauling capability of a vehicle due to the size and shape of a vehicle, arrangement of the seats, HVAC vents, and other elements in the interior of a vehicle. In facts, additional openings would add stress and weaken the structural integrity of the door panels and vehicle body such that it negatively affects driving performance and vehicle mileage. Since there is no evidence in the present application that additional openings in a vehicle body materially contributes to reduction of energy consumption or greenhouse gas emission, petitioner's assertion of the claimed invention's contribution to the conservation of energy resources is entirely speculative. As stated in the notice, the materiality standard does not permit an applicant to speculate as to how a hypothetical end-user might specially apply the invention in a manner than could materially contribute to category (A) or (B). *Also see MPEP § 708.02 (VI).* Accordingly, it is not agreed that the application on its face meets that materiality standard.

Any reconsideration of this decision should be submitted through the USPTO electronic filing system, EFS-Web, and selecting the document description of "Petition for Green Tech Pilot" on the EFS-Web screen.

Telephone inquiries concerning this decision should be directed to Lanna Mai at 571-272-6867.

The application is being forwarded to the Technology Center Art Unit 3612 for action in its regular turn.

/Lanna Mai/

Lanna Mai
Quality Assurance Specialist
Technology Center 3600

IN THE UNITED STATES PATENT AND TRADEMARK OFFICE

In re Application of:	)	
Stephen G. Kimmet	)	Group Art Unit: 3612
	)	
Serial No.: 13/172,213	)	Examiner:
	)	
Filing Date: June 29, 2011	)	Applicant No.: V/O2 – Pro Se
	)	
For: Vehicle Openings	)	
	)	

October 19, 2011

Commissioner for Patents
Alexandria, VA 22313-1450

PETITION FOR RECONSIDERATION TO MAKE SPECIAL UNDER GREEN TECHNOLOGY PILOT PROGRAM

Honorable Sir:

Petitioner respectfully petitions for reconsideration to make special the above-indicated application under the green technology pilot program. On September 21, 2011, the U.S. Patent and Trademark Office dismissed Petitioner's petition dated August 28, 2011, wherein the USPTO's dismissal it states that Petitioner's petition lacks items 3 and 4 for special status.

Petitioner appreciates being given the opportunity to submit the following in support of this petition for reconsideration.

Item 3

In the subject dismissal of 09/21/2011, it notes that Petitioner should state the basis for special status. Petitioner, therefore, asserts that the subject application qualifies for special status because it materially contributes to more efficient utilization and conservation of energy resources, and reduces greenhouse gas emission.

Item 4

Also in the subject dismissal, it states that the claimed invention is directed to various vehicle openings that "*would add stress and weaken the structural integrity of door panels and vehicle body such that it negatively affects the driving performance and vehicle mileage.*" Petitioner, however, asserts that the claimed invention is not directed to various vehicle openings but instead is specifically directed to novel sedan trunk gates as the only independent claim 1 recites, which is listed here below:

1. A sedan automobile, comprising:

a trunk disposed at the rear of a sedan automobile; and

a sedan trunk gate pivotably attached to the sedan automobile near the lower rear portion of the trunk;

wherein the sedan trunk gate being pivotably extended substantially vertically forms the generally vertical rear back panel of

> the trunk, and the sedan trunk gate being pivotably extended substantially horizontally, extends generally horizontally beyond the rear of the sedan.

Such sedan trunk gates would not add stress and weaken the structural integrity of door panels and a vehicle body such that they negatively affect the driving performance and vehicle mileage. To the contrary, the two embodiments of the claimed trunk gate, which are shown in the illustrations below, have no negative effect on door panels and a vehicle body on a vehicle since the claimed trunk gates would replace conventional rear trunk back panels or vertical panels of rear trunk lids of sedans.

In fact, the claimed sedan trunk gates 73′, 110 would materially contribute to more efficient utilization and conservation of energy resources, and would reduce greenhouse gas emissions of vehicles, as illustrated and explained below.

The first illustration is from a portion of Fig. 6B of the subject application, which is the claimed sedan trunk gate 73′, which pivots down.

FIG. 6B

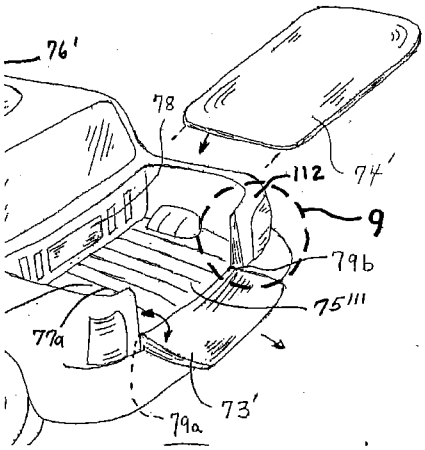

The second illustration is from Fig. 9 of the subject application, which is the claimed sedan trunk gate 110, which is capable of pivoting down from lower lid posts 148, 146 or pivoting up from upper pivot posts 138, 136.

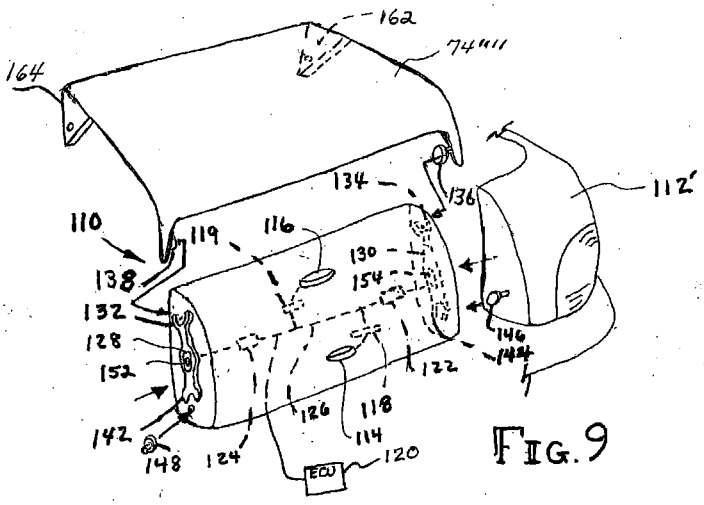

FIG. 9

Regarding the advantages provided by the claimed trunk gates, it is well known that SUVs, pick-up trucks, cross-over vehicles, and other types of current utility vehicles provide significant utility over conventional sedans. Unfortunately, it is also well known that these current utility vehicles possess more weight and present more air resistance when driven than do sedans. Because of these characteristics, these current utility vehicles disrupt the quality of the environment and materially contribute to the reliance on non-renewable energy resources, while promoting a disruption of energy conservation. This in turn leads to wasting energy resources and releasing more greenhouse gas emissions into the atmosphere.

As a result, environmental groups, some in government and business, and others have for years been working to reduce the number of SUVs, pick-up trucks, cross-over vehicles, and other types of utility vehicles that possess these negative characteristics, but more is needed.

What is proposed by the claimed sedan is to provide a vehicle purchasing consumer with an alternative choice of a sedan that has similar utility as that provided by SUVs, pick-up trucks, cross-over vehicles, and other types of utility vehicles, but in a more environmentally friendly package. This will provide the nation, and for that matter the world, with an alternate vehicle that reduces the disruption of the quality of the environment. Consequently, this will promote the conservation of energy. It also

follows that this would lead to a reduction of the wasting of energy resources, and would lead to reducing the release of a greenhouse gas emissions into the atmosphere.

For these positive environmental results, the Petitioner has invented and claims, within the subject non-provisional application, a sedan which typically is lighter in weight and presents less air resistance than SUVs, pick-up trucks, cross-over vehicles, and other types of utility vehicles. When compared to conventional sedans, the improved sedan would result in a vehicle that materially contributes to more efficient utilization and conservation of energy resources. It follows that the claimed sedan would reduce greenhouse gas emission.

Petitioner has always felt that to drive an SUV or other type of vehicle that used more gasoline was detrimental to our environment and wasteful of resources. Following years of owning only sedans and not having a means to conveniently haul or transport long, tall, or large items, or large quantities of material, Petitioner finally conceived of the pivoting down trunk gate 73′ and the selectable pivoting up/down trunk gate 110.

By modifying a sedan only slightly, as the claimed invention does, then large and long items, and larger quantities of material can be conveniently hauled or transported, without requiring an overbearing SUV or similar vehicle that wastes gasoline and other resources. The claimed sedan trunk does exactly that - it allows better access to a sedan trunk, where the vertical rear portion of the trunk or trunk lid pivots up or down to

a horizontal position, thereby allowing long items to be extended out the back of the sedan. In combination with a removable lid 74′ (see Fig. 6B above) or a collapsible trunk lid, tall items can be transported without requiring the wasteful overhead of an SUV or other such vehicle.

To summarize, the claimed invention provides a path to change the paradigm and mindset that bigger is better. For every sedan that is sold in place of an SUV, we and the environment benefit greatly. This results in a win – win situation.

Further, our economy cannot sustain the ever increasing expansion of SUVs on our highways.

On a recreational note, by having the claimed pivoting down trunk gates, tailgate parties can be attended with the use of a sedan!

Petitioner respectfully requests reconsideration to make special this application. The sooner prosecution of the claimed sedan can begin, the sooner we can take back our highways and the environment from the wasteful expansion of bigger and more powerful SUVs, minivans, and pickup trucks.

If the Commissioner has any questions or concerns, the favor of a telephone call to Petitioner is requested.

Respectfully submitted,

Stephen G. Kimmet

Stephen G. Kimmet

118 Gross Street
Tiffin, OH 44883
Phone: (419) 448-8974

UNITED STATES PATENT AND TRADEMARK OFFICE

UNITED STATES DEPARTMENT OF COMMERCE
United States Patent and Trademark Office
Address: COMMISSIONER FOR PATENTS
P.O. Box 1450
Alexandria, Virginia 22313-1450
www.uspto.gov

APPLICATION NO.	FILING DATE	FIRST NAMED INVENTOR	ATTORNEY DOCKET NO.	CONFIRMATION NO.
13/172,213	06/29/2011	Stephen G. Kimmet	V/O2 - Pro Se	6875

7590 11/08/2011
STEPHEN G. KIMMET
118 GROSS STREET
TIFFIN, OH 44883

EXAMINER

ART UNIT	PAPER NUMBER
3612	

MAIL DATE	DELIVERY MODE
11/08/2011	PAPER

Please find below and/or attached an Office communication concerning this application or proceeding.

The time period for reply, if any, is set in the attached communication.

UNITED STATES PATENT AND TRADEMARK OFFICE

Commissioner for Patents
United States Patent and Trademark Office
P.O. Box 1450
Alexandria, VA 22313-1450
www.uspto.gov

STEPHEN G. KIMMET
118 GROSS STREET
TIFFIN OH 44883

11/8/11

In re Application of	:	
Kimmet	:	DECISION ON PETITION
Application No. 13/172,213	:	TO MAKE SPECIAL UNDER
Filed: 6/26/2011	:	THE GREEN TECHNOLOGY
Attorney Docket No. **V/O2 - Pro Se**	:	PILOT PROGRAM

This is a decision on the request for reconsideration, filed 10/19/2011, to make the above-identified application special under the pilot program for applications pertaining to Green Technologies as set forth in 74 Federal Register Notice 64666 (December 8, 2009) and amended by 75 Federal Register Notice 28554 (May 21, 2010) and 75 Federal Register Notice 69049 (November 10, 2010).

The petition is **GRANTED**.

A grantable petition to make an application special under 37 CFR 1.102 and the pilot program as set forth in 74 FR 64666 must be directed to a nonprovisional application filed under 35 USC 111(a) or be a national stage entry under 35 USC 371, exclusive of any reissue applications.

In order to qualify for special status, the following requirements must be met. 1) The application must have no more than 3 independent claims and no more than 20 total claims. 2) The application must not contain any multiple dependent claims. 3) The petition must state the basis for seeking special status, i.e., the claimed invention either: A) materially enhances the quality of the environment or B) materially contributes to: i) the discovery or development of renewable energy resources, ii) the more efficient utilization and conservation of energy resources, or iii) greenhouse gas emission reduction. 4) If the disclosure is not clear on its face that the claimed invention materially contributes under category (A) or (B), the petition must be accompanied by a statement by the applicant, assignee, or an attorney/agent registered to practice before the Office explaining how the materiality standard is met. 5) A statement that applicant will agree to make an election without traverse in a telephonic interview if a restriction requirement is made by the examiner. 6) The petition to make special must be filed electronically. 7) The petition must be filed at least one day prior to the date that a first Office Action appears in the Patent Application Information Retrieval (PAIR) system. 8) The petition must be accompanied by a request for early publication in compliance with 37 CFR 1.219 and include the publication fee as set forth in 37 CFR 1.18(d).

The requirement for a fee for consideration of the petition to make special for applications pertaining to Green Technologies has been waived.

The instant petition complies with items 1 – 8 above. Accordingly, the above-identified application has been accorded "special" status.

Telephone inquires concerning this decision should be directed to Tom Dunn at 571-272-1171.

The application is being forwarded to the Technology Center Art Unit 3612 for action on the merits commensurate with this decision.

/Tom Dunn/

Tom Dunn
Quality Assurance Specialist
Technology Center 1700

Doc Code: PET.GREEN
Document Description: Petition for Green Tech Pilot

PTO/SB/420 (11-10)
Approved for use through 01/31/2011. OMB 0651-0062
U.S. Patent and Trademark Office; U. S. DEPARTMENT OF COMMERCE
Under the Paperwork Reduction Act of 1995, no persons are required to respond to a collection of information unless it displays a valid OMB control number.

PETITION TO MAKE SPECIAL UNDER THE GREEN TECHNOLOGY PILOT PROGRAM

Attorney Docket Number: 15650-000002/US/COA	Application Number (if known): Not yet assigned	Filing date: Herewith
First Named Inventor: Mahendra Dassanayake et al.		
Title: SOLID STATE LIGHT ASSEMBLY HAVING LIGHT SOURCES IN A RING		

APPLICANT HEREBY REQUESTS TO PARTICIPATE IN THE GREEN TECHNOLOGY PILOT PROGRAM FOR THE ABOVE-IDENTIFIED APPLICATION. See Instruction Sheet on page 2.

This petition must be timely filed electronically using the USPTO electronic filing system, EFS-Web.

1. By filing this petition:

   Applicant is requesting early publication: Applicant hereby requests early publication under 37 CFR 1.219 and the publication fee set forth in 37 CFR 1.18(d) accompanies this request.

2. By filing this petition: applicant is agreeing to make an election without traverse in a telephonic interview and elect an invention that meets the eligibility requirements for the Green Technology Pilot Program, if the Office determines that the claims are not obviously directed to a single invention. See Instruction Sheet.

3. This request is accompanied by statements of special status for the eligibility requirement.

4. The application contains no more than three (3) independent claims and twenty (20) total claims.

5. The application does not contain any multiple dependent claims.

6. Other attachments: MATERIALITY STATEMENT

Signature	Date June 29, 2011
Name (Print/Typed) Kevin G. Mierzwa	Registration Number 38,049

Note: *Signatures of all the inventors or assignees of record of the entire interest or their representative(s) are required in accordance with 37 CFR 1.33 and 11.18. Please see 37 CFR 1.4(d) for the form of the signature. If necessary, submit multiple forms for more than one signature see below*.*

[X] *Total of 2 forms are submitted.

The information is required to obtain or retain a benefit by the public which is to file (and by the USPTO to process) an application. Confidentiality is governed by 35 U.S.C. 122 and 37 CFR 1.11 and 1.14. This collection is estimated to take 12 hours to complete, including gathering, preparing, and submitting the completed application form to the USPTO. Time will vary depending upon the individual case. Any comments on the amount of time you require to complete this form and/or suggestions for reducing this burden, should be sent to the Chief Information Officer, U.S. Patent and Trademark Office, U.S. Department of Commerce, P.O. Box 1450, Alexandria, VA 22313-1450. DO NOT SEND FEES OR COMPLETED FORMS TO THIS ADDRESS. **SEND TO: Commissioner for Patents, P.O. Box 1450, Alexandria, VA 22313-1450.**

If you need assistance in completing the form, call 1-800-PTO-9199 and select option 2.

PATENT

IN THE UNITED STATES PATENT AND TRADEMARK OFFICE

Application No.:	Not yet assigned
Confirmation No.:	Not yet assigned
Filing Date:	Herewith
Applicant:	Mahendra Dassanayake et al.
Group Art Unit:	Not yet assigned
Examiner:	Not yet assigned
Title:	SOLID STATE LIGHT ASSEMBLY HAVING LIGHT SOURCES IN A RING
Attorney Docket:	15650-000002/US/COA

Commissioner for Patents
P.O. Box 1450
Alexandria, Virginia 22313-1450

MATERIALITY STATEMENT

Sir:

The present patent application is directed to a configuration for a light bulb that uses light-emitting diodes as the light source. The use of light-emitting diodes significantly reduces the amount of energy used for a desired light output. The amount of energy is reduced compared to conventional filament bulbs as well as compact fluorescent bulbs. Therefore, the present application materially contributes to energy conservation.

Respectfully submitted,

Dated: June 29, 2011

By: _____
Kevin G. Mierzwa, Reg. No. 38,049

HARNESS, DICKEY & PIERCE, P.L.C.
P.O. Box 828
Bloomfield Hills, Michigan 48303
(248) 641-1600

KGM/tp

15834547.1

UNITED STATES PATENT AND TRADEMARK OFFICE

UNITED STATES DEPARTMENT OF COMMERCE
United States Patent and Trademark Office
Address: COMMISSIONER FOR PATENTS
P.O. Box 1450
Alexandria, Virginia 22313-1450
www.uspto.gov

APPLICATION NO.	FILING DATE	FIRST NAMED INVENTOR	ATTORNEY DOCKET NO.	CONFIRMATION NO.
13/172,236	06/29/2011	Mahendra Dassanayake	15650-000002/US/COA	6914

27572 7590 07/29/2011
HARNESS, DICKEY & PIERCE, P.L.C.
P.O. BOX 828
BLOOMFIELD HILLS, MI 48303

EXAMINER

ART UNIT	PAPER NUMBER
2875	

MAIL DATE	DELIVERY MODE
07/29/2011	PAPER

Please find below and/or attached an Office communication concerning this application or proceeding.

The time period for reply, if any, is set in the attached communication.

UNITED STATES PATENT AND TRADEMARK OFFICE

Commissioner for Patents
United States Patent and Trademark Office
P.O. Box 1450
Alexandria, VA 22313-1450
www.uspto.gov

HARNESS, DICKEY & PIERCE, P.L.C.
P.O. BOX 828
BLOOMFIELD HILLS MI 48303

In re Application of	:	
DASSANAYAKE et al.	:	DECISION ON PETITION
Application No. 13/172236	:	TO MAKE SPECIAL UNDER
Filed: June 29, 2011	:	THE GREEN TECHNOLOGY
Attorney Docket No. 15650-000002/US/COA	:	PILOT PROGRAM

This is a decision on the petition under 37 CFR 1.102, filed on June 29, 2011, to make the above-identified application special under the pilot program for applications pertaining to Green Technologies as set forth 74 Federal Register Notice 64666 (December 8, 2009) and amended by 75 Federal Register Notice 28554 (May 21, 2010) and 75 Federal Register Notice 69049 (November 10, 2010).

The petition is **GRANTED**.

A grantable petition to make an application special under 37 CFR 1.102 and the pilot program as set forth in 74 FR 64666 must be directed to a nonprovisional application filed under 35 USC 111(a) or be a national stage entry under 35 USC 371, exclusive of any reissue applications.

In order to qualify for special status, the following requirements must be met. 1) The application must have no more than 3 independent claims and no more than 20 total claims. 2) The application must not contain any multiple dependent claims. 3) The petition must state the basis for seeking special status, i.e., the claimed invention either: A) materially enhances the quality of the environment or B) materially contributes to: i) the discovery or development of renewable energy resources, ii) the more efficient utilization and conservation of energy resources, or iii) greenhouse gas emission reduction. 4) If the disclosure is not clear on its face that the claimed invention materially contributes under category (A) or (B), the petition must be accompanied by a statement by the applicant, assignee, or an attorney/agent registered to practice before the Office explaining how the materiality standard is met. 5) A statement that applicant will agree to make an election without traverse in a telephonic interview if a restriction requirement is made by the examiner. 6) The petition to make special must be filed electronically. 7) The petition must be filed at least one day prior to the date that a first Office Action appears in the Patent Application Information Retrieval (PAIR) system. 8) The petition must be accompanied by a request for early publication in compliance with 37 CFR 1.219 and include the publication fee as set forth in 37 CFR 1.18(d).

The requirement for a fee for consideration of the petition to make special for applications pertaining to Green Technologies has been waived.

The instant petition complies with items 1 – 8 above. Accordingly, the above-identified application has been accorded "special" status.

Telephone inquires concerning this decision should be directed to Colleen Dunn at 571-272-1170.

The application is being forwarded to the appropriate Technology Center Art Unit for action on the merits commensurate with this decision.

/Colleen Dunn/

Colleen Dunn
Quality Assurance Specialist
Technology Center 2800

Doc Code: PET.GREEN
Document Description: Petition for Green Tech Pilot

PTO/SB/420 (03-11)

PETITION TO MAKE SPECIAL UNDER THE GREEN TECHNOLOGY PILOT PROGRAM

Attorney Docket Number: 3604/102	Application Number (if known): 13/172,257	Filing date: June 29, 2011

First Named Inventor: James David Marley

Title: Adjustable Racking System for Solar Array and Method of Construction of a Solar Array

APPLICANT HEREBY REQUESTS TO PARTICIPATE IN THE GREEN TECHNOLOGY PILOT PROGRAM FOR THE ABOVE-IDENTIFIED APPLICATION. See Instruction Sheet on page 2.

This petition must be timely filed electronically using the USPTO electronic filing system, EFS-Web.

1. By filing this petition:

   Applicant is requesting early publication: Applicant hereby requests early publication under 37 CFR 1.219 and the publication fee set forth in 37 CFR 1.18(d) accompanies this request.

2. By filing this petition: applicant is agreeing to make an election without traverse in a telephonic interview and elect an invention that meets the eligibility requirements for the Green Technology Pilot Program, if the Office determines that the claims are not obviously directed to a single invention. See Instruction Sheet.

3. This request is accompanied by statements of special status for the eligibility requirement.

4. The application contains no more than three (3) independent claims and twenty (20) total claims.

5. The application does not contain any multiple dependent claims.

6. Other attachments: Article by Denholm and Margolis as cited in the statement

Signature /Thomas J. Tuytschaevers, #42,190/	Date 7/14/2011
Name (Print/Typed) Thomas J.Tuytschaevers	Registration Number 42,190

Note: *Signatures of all the inventors or assignees of record of the entire interest or their representative(s) are required in accordance with 37 CFR 1.33 and 11.18. Please see 37 CFR 1.4(d) for the form of the signature. If necessary, submit multiple forms for more than one signature, see below*.*

☒ *Total of 1 forms are submitted.

If you need assistance in completing the form, call 1-800-PTO-9199 and select option 2.

Practitioner's Docket No.: 3604/102 ***PATENT***

IN THE UNITED STATES PATENT AND TRADEMARK OFFICE

In re application of: James David Marley
Application No.: 13/172,257 Group No.: 3633
Filed: June 29, 2011 Examiner: Not Yet Assigned
For: Adjustable Racking System for Solar Array and Method of Construction of a Solar Array

Mail Stop Petition
Commissioner for Patents
P.O. Box 1450
Alexandria, VA 22313-1450

Statement of Special Status for the Eligibility Requirement -- Attachment to Petition to Make Special Under The Green Technology Pilot Program

Dear Sir:

Applicant respectfully submits this Statement of Special Status for the Eligibility Requirement to accompany a Petition to Make Special Under The Green Technology Pilot Program.

The claims in the present application are directed to subject matter that will materially contribute to the development of renewable energy resources, by one or more of the following means:

(i) making available for solar arrays land that is presently not available because that land is being used for another purpose that it incompatible with existing solar array technology;

(ii) reducing the cost of building a solar array, thereby making solar power more cost-competitive, and therefore making solar arrays more attractive;

(iii) reducing the environmental impact of a solar array, and the environmental impact of the construction of a solar array.

I. <u>Making More Land Available For Solar Installations</u>

The present application will contribute to the development of solar renewable energy resources by making land available that is not currently available for solar arrays.

Solar array technology competes with other potential uses for land. In Germany, for example, cultivated farm land has been taken out of production so that solar arrays could be installed in the fields.

The U.S. Department of Energy National Renewable Energy Laboratory has recognized the problem that solar arrays "need to compete with other uses for limited land areas" (see Impacts of Array Configuration on Land-Use Requirements for Large-Scale Photovoltaic Deployment In The United States, Denholm, P. and Margolis, R., Conference Paper NREL/CP-670-42971, May 2008, page 1).

> The potential use of large amounts of area for PV raises a number of questions regarding the availability of land for and the potential land-use impacts of wide-scale PV deployment. (Denholm and Margolis, page 3).

Denholm and Margolis suggest that "less disruptive" solar arrays could allow multiple simultaneous uses of land. For example:

> The substantial amount of land surrounding each 2-axis array could potentially support multiple land uses such as grazing and the cultivation of shade tolerant crops. (Denholm and Margolis, page 4).

The present application addresses this recognized problem by allowing land to be used for both solar arrays and other uses, such as farming, or raising livestock, etc. Some land that is not currently available for solar array projects will thus become available.

For example, a farmer will realize that farm fields can grow crops and still support a solar array, and even provide power to the farm. Even if the farmer changes what crop is grown, the solar array can be adjusted to pass more (or less) sunlight, depending on the needs of the crop. The farmer will then be more willing to develop the solar potential of the farm's land.

II. Reduced Cost Makes Solar More Attractive

The present application will contribute to the development of solar renewable energy resources by making a solar array less expensive. For example, at 2011 prices, the inventor believes that a solar array can be installed at a cost of about $5/watt.

Previous solar array technology is more expensive, in part because the arrays require heavy equipment to install. An array on the ground may require bulldozers, backhoes and cement trucks to prepare the land and install the array. Those machines are expensive, and also have significant impact on the local environment.

In contrast, a solar array as in the present application does not require a concrete footing to support the array or secure it in position, and so expensive cement trucks or backhoes are not needed.

III. Reduced Environmental Impact

The present application will contribute to the development of solar renewable energy resources by reducing the environmental impact of the installation process. People are more likely to develop the solar potential of land if installing a solar array will not cause so much environmental impact.

In fact, Denholm and Margolis concluded that "ecosystem impacts of large-scale PV deployment needs to be evaluated." (Denholm and Margolis, page 4). In particular, Denholm and Margolis suggest the "the evaluation of best practices" regarding "the use of installation and maintenance techniques to provide minimum impact such as soil compaction and erosion." (Denholm and Margolis, page 4).

The present application reduces the environmental impact of the installation process by allowing much of the fabrication to be done off-site, and by reducing the amount of heavy machinery used in the installation process, and by reducing the environmental impact of the machinery that is used in the installation process.

Respectfully submitted,

July 14, 2011

/Thomas J. Tuytschaevers, # 42,190/
Thomas J. Tuytschaevers
Attorney for Applicant
Reg. No. 42,190
Sunstein Kann Murphy & Timbers LLP
125 Summer Street, 11th Floor
Boston, MA 02110-1618
(617) 443-9292

NREL National Renewable Energy Laboratory
Innovation for Our Energy Future
A national laboratory of the U.S. Department of Energy
Office of Energy Efficiency & Renewable Energy

Impacts of Array Configuration on Land-Use Requirements for Large-Scale Photovoltaic Deployment in the United States

Preprint

Paul Denholm and Robert M. Margolis
National Renewable Energy Laboratory

Presented at SOLAR 2008 - American Solar Energy Society (ASES)
San Diego, California
May 3–8, 2008

Conference Paper
NREL/CP-670-42971
May 2008

NREL is operated by Midwest Research Institute • Battelle Contract No. DE-AC36-99-GO10337

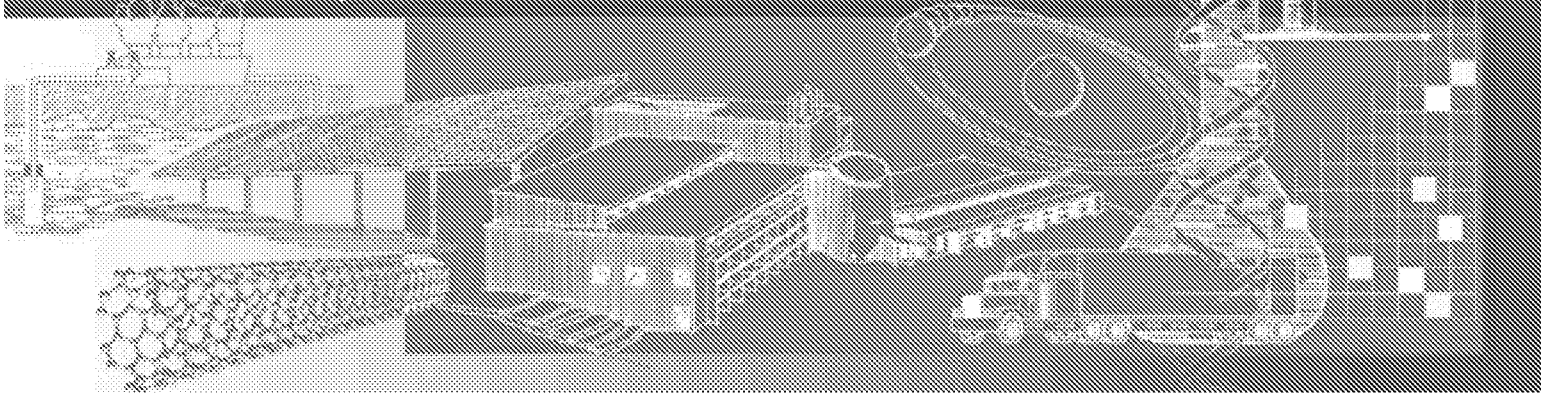

NOTICE

The submitted manuscript has been offered by an employee of the Midwest Research Institute (MRI), a contractor of the US Government under Contract No. DE-AC36-99GO10337. Accordingly, the US Government and MRI retain a nonexclusive royalty-free license to publish or reproduce the published form of this contribution, or allow others to do so, for US Government purposes.

This report was prepared as an account of work sponsored by an agency of the United States government. Neither the United States government nor any agency thereof, nor any of their employees, makes any warranty, express or implied, or assumes any legal liability or responsibility for the accuracy, completeness, or usefulness of any information, apparatus, product, or process disclosed, or represents that its use would not infringe privately owned rights. Reference herein to any specific commercial product, process, or service by trade name, trademark, manufacturer, or otherwise does not necessarily constitute or imply its endorsement, recommendation, or favoring by the United States government or any agency thereof. The views and opinions of authors expressed herein do not necessarily state or reflect those of the United States government or any agency thereof.

Available electronically at http://www.osti.gov/bridge

Available for a processing fee to U.S. Department of Energy
and its contractors, in paper, from:
U.S. Department of Energy
Office of Scientific and Technical Information
P.O. Box 62
Oak Ridge, TN 37831-0062
phone: 865.576.8401
fax: 865.576.5728
email: mailto:reports@adonis.osti.gov

Available for sale to the public, in paper, from:
U.S. Department of Commerce
National Technical Information Service
5285 Port Royal Road
Springfield, VA 22161
phone: 800.553.6847
fax: 703.605.6900
email: orders@ntis.fedworld.gov
online ordering: http://www.ntis.gov/ordering.htm

Printed on paper containing at least 50% wastepaper, including 20% postconsumer waste

IMPACTS OF ARRAY CONFIGURATION ON LAND-USE REQUIREMENTS FOR LARGE-SCALE PHOTOVOLTAIC DEPLOYMENT IN THE UNITED STATES

Paul Denholm
National Renewable Energy Laboratory
1617 Cole Blvd
Golden, CO 80401
paul_denholm@nrel.gov

Robert M. Margolis
National Renewable Energy Laboratory
901 D. Street SW, Suite 930
Washington, D.C. 20024
robert_margolis@nrel.gov

ABSTRACT

Land use is often cited as an important issue for renewable energy technologies. In this paper we examine the relationship between land-use requirements for large-scale photovoltaic (PV) deployment in the U.S. and PV-array configuration. We estimate the per capita land requirements for solar PV and find that array configuration is a stronger driver of energy density than regional variations in solar insolation. When deployed horizontally, the PV land area needed to meet 100% of an average U.S. citizen's electricity demand is about 100 m^2. This requirement roughly doubles to about 200 m^2 when using 1-axis tracking arrays. By comparing these total land-use requirements with other current per capita land uses, we find that land-use requirements of solar photovoltaics are modest, especially when considering the availability of zero impact "land" on rooftops. Additional work is need to examine the tradeoffs between array spacing, self-shading losses, and land use, along with possible techniques to mitigate land-use impacts of large-scale PV deployment.

1. INTRODUCTION

The installed price of PV systems has dropped considerably over the past couple of decades and is expected to continue to decline over the next two decades. As the price approaches grid-parity, PV systems are likely to become a significant component of future electric power systems. The fact that solar energy is a diffuse resource, in particular compared to fossil and nuclear fuels, is both a strength and a potential liability. It is a strength in that solar energy can be captured and utilized to provide energy services where these services are needed, and it is a potential liability in that it may need to compete with other uses for limited land areas. In this paper we examine the land area required for PV to contribute a significant fraction of a region's electricity demand in the U.S.

The actual land requirements are driven by both the solar resource and the configuration of the PV system. Several aspects of the land-use requirements of solar PV are considered in this analysis. First, we quantify the relationship between PV energy yield and land use, considering various array configurations and spacing. Second, we quantify the actual land area required to meet the electricity demand in several regions of the United States using PV in different configurations. Finally, we discuss the implications of this land use, and consider further steps needed to understand and potentially minimize land-use and environmental impacts from large-scale PV deployment.

2. PV POWER AND ENERGY DENSITY

A major consideration for land-use requirements is the PV energy density, or the energy yield per unit of land (or surface area) occupied by a PV system. The energy density is a function of the array power density (power per unit land area occupied) and the PV generation (energy generated per unit of power). For any given site and PV module, the energy density is ultimately a function of how the system is configured. If PV systems are tilted (or mounted on tracking arrays) the energy yield per unit of module power increases, but the spacing between modules needs to increase in order to avoid self-shading and to allow for maintenance. Ground-based arrays have the additional complication of requiring minimum spacing between rows to allow for service vehicles.

To determine the PV array energy density for different regions of the U.S., we used data from the National Solar Radiation Database (NSRDB) for the years 2003-2005

(1). We used the NSRDB data in conjunction with the PVWATTS/PVFORM model (2), assuming a 1-kW (Standard Test Conditions) module, and an average system DC-AC conversion efficiency of 77%. We then calculated an average PV array energy density over the 3 year period 2003-2005, aggregated at the state level by weighing each weather station site by the amount of electricity demand in the assigned region. Figure 1 illustrates the allocation of weather stations in the southwestern United States by census tract. A more detailed discussion of the modeling methodology is provided in reference 3.

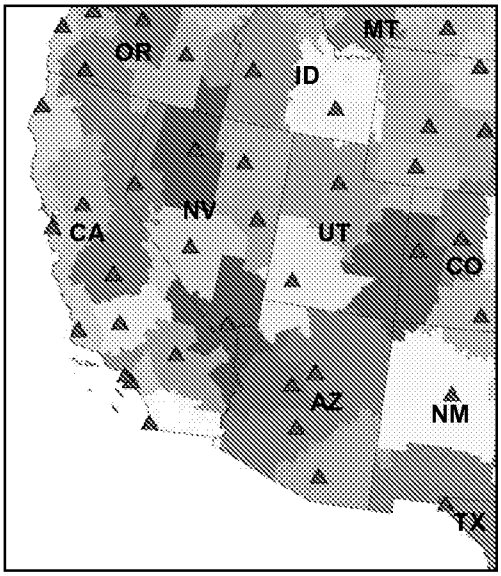

Figure 1. Allocation of the NSRDB Weather Station Data in the Southwestern United States by Census Tract

Figure 2 illustrates the resulting PV array energy density for four states (Arizona, California, Missouri, and New Jersey), and the national average, as a function of array configuration. The most notable feature of this figure is the strong dependence of energy density on system configuration, which is significantly greater than the dependence of energy density on the difference in solar resource.

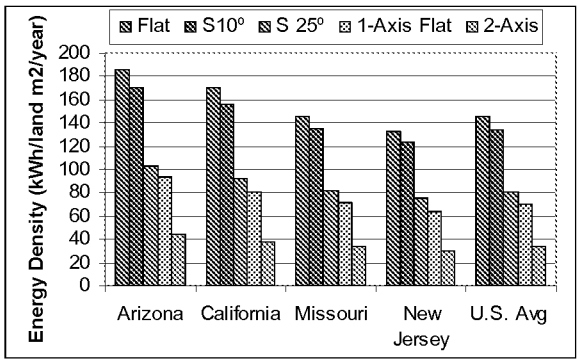

Figure 2. PV Energy Density in Four States by Array Configurations.

The highest deployable energy density is a flat array configuration, an approach often used on large commercial building rooftops. However, there are numerous tradeoffs between energy yield, mounting requirements, roof loading limits, etc., which often lead to deployment of PV systems at a low tilt angle in order to increase the collector yield. Rooftop-type systems with a 10° tilt angle increased collector yield by about 10% with a modest decrease in overall system energy density.

Increasing the tilt angle, or deploying tracking arrays can considerably increase the yield per unit of collector area – by over 50% moving from flat to 2-axis tracking. However, in terms of energy density, the increased yield from using tilted and tracking arrays does not make up for the significant additional land area required to avoid self shading. The energy density for tilted- and single-axis tracking arrays are around half of the energy density of a flat, rooftop system, while 2-axis tracking system may produce about 1/3rd of the energy per unit of land area. Ultimately, this represents a tradeoff between land costs and PV-collector costs. PV costs are such that a premium is placed on maximizing yield from each installed unit. This tends to encourage array designs that minimize self-shading. It also promotes the use of tracking arrays, especially when the value of additional yield exceeds the incremental cost of the added mechanical and structural components.

3. TOTAL LAND AREA REQUIREMENTS

The impact of array configuration on total land requirements of PV can be examined by comparing system energy density to total regional electricity use. The annual electricity production in each state was compared to the annual simulated yield from PV for the years 2003-2005 (4). We estimated the boundary condition land-use requirement, i.e., where PV provides 100% of each state's electricity demand. Meeting this condition requires the

use of energy storage. In estimating the energy storage requirements, we assumed a 75% round trip storage efficiency, and that 70% of all consumed electricity would pass through storage, resulting in a required electricity production equal 1.23 times the actual demand.

Two land-use metrics are useful for understanding the potential land-use requirements. The first is the per-capita land-use requirement, which could be considered part of the ecological footprint associated with each individual's electricity use if derived from PV.

Figure 3 illustrates the per-capita land-use requirement for several states in the U.S.

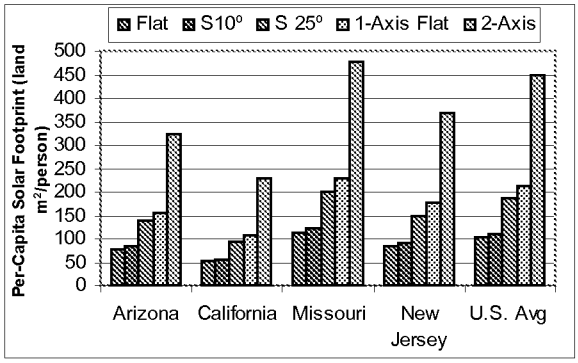

Figure 3. Solar PV Per Capital Land-use Requirement for Four States.

As shown in figure 3, when deployed horizontally, the PV land area needed to meet 100% of an average U.S. citizen's electricity demand is about 100 m^2 with California having the lowest requirement at about 50 m^2 per person due not only to good solar resource, but also the lowest per capita electricity consumption in the nation. When using 1-axis tracking arrays, the U.S. per capita PV area roughly doubles to over 200 m^2 on average, and about 100 m^2 per person in California.

In states with a low population density, this per-capita area represents a relatively small fraction of the total state area. However, in states with a high population density, this per-capita area can be a significant fraction of total state area. Figure 4 illustrates the fraction of land required by solar arrays in various configurations to meet the 100% boundary condition. In the mid-western and western states, this is a relatively small fraction of total land area. However in some eastern states, the combination of lower insolation and higher population density would require a substantial fraction of the state's area to meet the entire electricity demand with solar PV.

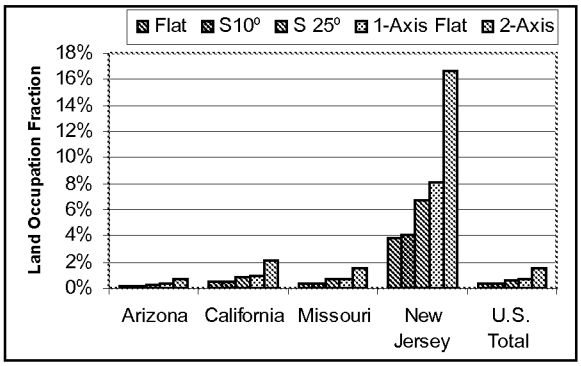

Figure 4. Fraction of Land Required to Meet 100% of Electricity Demand in Four States.

4. IMPLICATION OF PV LAND USE

The potential use of large amounts of area for PV raises a number of questions regarding the availability of land for and the potential land-use impacts of wide-scale PV deployment. Perhaps the most obvious issue is the availability of zero-impact "land" on rooftops. There is, however, considerable uncertainty in the estimates of available rooftop space that is suitable for PV in the U.S. While no comprehensive study has been performed, several estimates of the rooftop space appropriate for PV are available. One estimate assumes that 18% of all residential roofspace and 65% of all commercial roofspace are available and suitable for PV deployment (5). This results in a national average of about 65 m^2 of rooftop area available per person in the U.S. Assuming flat deployment, this number would imply that rooftop PV deployment alone could provide around two-thirds of the nation's electricity supply. However, this estimate does not take into account the sub-optimal orientation of many buildings and assumes that the PV system on each building is sized to completely fill the available roofspace, as opposed to applying a typical size to meet the economic needs of the individual building. This number is also unsatisfactory in that it assumes a uniform shading factor throughout the United States, which is extremely unlikely given the variation in vegetation between the eastern and western U.S. A more recent estimate splits the country into two zones, increasing the overall estimate of roofspace available in the southern and southwestern United States (6).

Despite tremendous uncertainty in overall availability, it is clear that roofspace could provide a significant fraction of the total area needed for PV to become a major contributor to the nation's electricity supply. It should be noted that rooftop space is not entirely without opportunity costs, since rooftop PV will compete with

other applications, such as solar water heating, green roofs, daylighting etc.

Beyond rooftops, if it assumed that large-scale ground based PV systems will be deployed, then some consideration of actual land use and land-use impacts should be considered. Several land-use applications provide a useful comparison. Golf courses and airports each currently occupy about 35 m^2 per person in the United States, while land used to grow corn for ethanol production exceeds 200 m^2 per person, although this land is concentrated in a fairly small number of states.

Comparisons between PV and other land uses must be placed in context of the actual degree to which they impact the land and potentially alter local ecosystems. Deploying tightly packed PV arrays would create the most disruption but would require the least amount of land area. In contrast, the use of pole-mounted 2-axis arrays would require significantly more land but could be substantially less disruptive. This difference is important, especially when considering the extremely low energy density of 2-axis arrays. The substantial amount of land surrounding each 2-axis array could potentially support multiple land uses such as grazing and the cultivation of shade tolerant crops.

5. CONCLUSIONS AND FUTURE WORK

The land-use requirements for wide-scale deployment of PV are modest when considering both the large area of rooftop availability and when compared to other uses of land in the United States. Additional studies are needed to better understand the potential opportunities and impacts of PV on land use. First, a more comprehensive estimate of rooftop availability is needed on a national basis. This includes detailed statistical sampling of homes and commercial buildings, considering the distribution of rooftop orientation, pitch, shading, and other availability factors. Second, better understanding of actual shading impacts of ground based PV arrays is required. Installers may be conservative when performing shading analysis, spacing arrays to produce every last possible kWh out of the system. It may be that actual shading impacts, considering real weather patterns during periods of low sun angle may not warrant the large array spacing calculated by traditional shading analysis. This could allow for increased packing density and a corresponding reduction in land-use impacts, limited of course by maintenance requirements. Evaluation of increased array density and increased shading losses at low sun angles could also consider the potentially lower value of electricity during these typically off-peak time periods. Finally, actual ecosystem impacts of large-scale PV deployment need to be evaluated. This includes studies and evaluation of shade tolerant native and beneficial species that could be grown under large-scale PV arrays. This also includes evaluation of best practices to minimize the use of herbicides and other chemicals, and the use of installation and maintenance techniques to provide minimum impact such as soil compaction and erosion.

6. REFERENCES

(1) National Renewable Energy Laboratory, 2007. National Solar Radiation Database 1991–2005 Update: User's Manual, NREL/TP-581-41364

(2) Marion, B.; Anderberg, M.; Gray-Hann, P., 2005. Recent Revisions to PVWATTS. NREL/CP-520-38975.

(3) Denholm, P., Margolis, R. M., 2007. The Regional Per-Capita Solar Electric Footprint for the United States. NREL/TP-670-42463.

(4) Energy Information Administration, 2007. Form EIA-861 Database. http://www.eia.doe.gov/cneaf/electricity/page/eia861.html

(5) Chaudhari, M., Frantzis, L., and T. E. Hoff. "PV Grid Connected market Potential in 2010 under a Cost Breakthrough Scenario," 2004. Via www.ef.org/documents/EF-Final-Final2.pdf

(6) J. Paidipati, L. Frantzis, H. Sawyer, and A. Kurrasch 2008 Rooftop Photovoltaics Market Penetration Scenarios. NREL/SR-581-42306

REPORT DOCUMENTATION PAGE

Form Approved
OMB No. 0704-0188

The public reporting burden for this collection of information is estimated to average 1 hour per response, including the time for reviewing instructions, searching existing data sources, gathering and maintaining the data needed, and completing and reviewing the collection of information. Send comments regarding this burden estimate or any other aspect of this collection of information, including suggestions for reducing the burden, to Department of Defense, Executive Services and Communications Directorate (0704-0188). Respondents should be aware that notwithstanding any other provision of law, no person shall be subject to any penalty for failing to comply with a collection of information if it does not display a currently valid OMB control number.
PLEASE DO NOT RETURN YOUR FORM TO THE ABOVE ORGANIZATION.

1. REPORT DATE *(DD-MM-YYYY)*
May 2008

2. REPORT TYPE
Conference Paper

3. DATES COVERED *(From - To)*

4. TITLE AND SUBTITLE
Impacts of Array Configuration on Land-Use Requirements for Large-Scale Photovoltaic Deployment in the United States: Preprint

5a. CONTRACT NUMBER
DE-AC36-99-GO10337

5b. GRANT NUMBER

5c. PROGRAM ELEMENT NUMBER

6. AUTHOR(S)
P. Denholm and R.M. Margolis

5d. PROJECT NUMBER
NREL/CP-670-42971

5e. TASK NUMBER
PVB7.6403

5f. WORK UNIT NUMBER

7. PERFORMING ORGANIZATION NAME(S) AND ADDRESS(ES)
National Renewable Energy Laboratory
1617 Cole Blvd.
Golden, CO 80401-3393

8. PERFORMING ORGANIZATION REPORT NUMBER
NREL/CP-670-42971

9. SPONSORING/MONITORING AGENCY NAME(S) AND ADDRESS(ES)

10. SPONSOR/MONITOR'S ACRONYM(S)
NREL

11. SPONSORING/MONITORING AGENCY REPORT NUMBER

12. DISTRIBUTION AVAILABILITY STATEMENT
National Technical Information Service
U.S. Department of Commerce
5285 Port Royal Road
Springfield, VA 22161

13. SUPPLEMENTARY NOTES

14. ABSTRACT *(Maximum 200 Words)*

Land use is often cited as an important issue for renewable energy technologies. In this paper we examine the relationship between land-use requirements for large-scale photovoltaic (PV) deployment in the U.S. and PV-array configuration. We estimate the per capita land requirements for solar PV and find that array configuration is a stronger driver of energy density than regional variations in solar insolation. When deployed horizontally, the PV land area needed to meet 100% of an average U.S. citizen's electricity demand is about 100 m2. This requirement roughly doubles to about 200 m2 when using 1-axis tracking arrays. By comparing these total land-use requirements with other current per capita land uses, we find that land-use requirements of solar photovoltaics are modest, especially when considering the availability of zero impact "land" on rooftops. Additional work is need to examine the tradeoffs between array spacing, self-shading losses, and land use, along with possible techniques to mitigate land-use impacts of large-scale PV deployment.

15. SUBJECT TERMS
NREL; Paul Denholm; Robert Margolis; solar photovoltaics; PV; land use; large-scale PV deployment; solar insolation; rooftop solar; solar arrays; electricity demand

16. SECURITY CLASSIFICATION OF:			17. LIMITATION OF ABSTRACT	18. NUMBER OF PAGES	19a. NAME OF RESPONSIBLE PERSON
a. REPORT	b. ABSTRACT	c. THIS PAGE			19b. TELEPHONE NUMBER (*Include area code*)
Unclassified	Unclassified	Unclassified	UL		

Standard Form 298 (Rev. 8/98)
Prescribed by ANSI Std. Z39.18

F1146-E(12/2004)

UNITED STATES PATENT AND TRADEMARK OFFICE

UNITED STATES DEPARTMENT OF COMMERCE
United States Patent and Trademark Office
Address: COMMISSIONER FOR PATENTS
P.O. Box 1450
Alexandria, Virginia 22313-1450
www.uspto.gov

APPLICATION NO.	FILING DATE	FIRST NAMED INVENTOR	ATTORNEY DOCKET NO.	CONFIRMATION NO.
13/172,257	06/29/2011	James David Marley	3604/102	6954

2101 7590 07/25/2011
Sunstein Kann Murphy & Timbers LLP
125 SUMMER STREET
BOSTON, MA 02110-1618

EXAMINER

ART UNIT	PAPER NUMBER
3633	

NOTIFICATION DATE	DELIVERY MODE
07/25/2011	ELECTRONIC

Please find below and/or attached an Office communication concerning this application or proceeding.

The time period for reply, if any, is set in the attached communication.

Notice of the Office communication was sent electronically on above-indicated "Notification Date" to the following e-mail address(es):

PATENTS@SUNSTEINLAW.COM

UNITED STATES PATENT AND TRADEMARK OFFICE

Commissioner for Patents
United States Patent and Trademark Office
P.O. Box 1450
Alexandria, VA 22313-1450
www.uspto.gov

JUL 2 2 2011

Sunstein Kann Murphy & Timbers LLP
125 SUMMER STREET
BOSTON MA 02110-1618

In re Application of	:	
JAMES MARLEY	:	DECISION ON PETITION
Application No. 13/172,257	:	TO MAKE SPECIAL UNDER
Filed June 29, 2011	:	THE GREEN TECHNOLOGY
Attorney Docket No. 3604/102	:	PILOT PROGRAM

This is a decision on the petition under 37 CFR 1.102, filed July 14, 2011 to make the above-identified application special under the pilot program for applications pertaining to Green Technologies as set forth in 74 Federal Register Notice 64666 (December 8, 2009) and amended by 75 Federal Register Notice 28554 (May 21, 2010) and 75 Federal Register Notice 69049 (November 10, 2010).

The petition is **DISMISSED**.

If reconsideration of this decision is desired, a petition for reconsideration must be filed within ONE (1) MONTH OR THIRTY (30) DAYS from the mail date of this decision, whichever is longer. No extension of this time limit can be granted under 37 CFR 1.136(a) or (b). The petition for reconsideration should include an exhaustive attempt to provide the lacking item(s) noted below, since, after a decision on the petition for reconsideration, no further reconsideration or review of the matter will be undertaken by the Director.

A grantable petition to make an application special under 37 CFR 1.102 and the pilot program as set forth in 74 FR 64666 must be directed to a nonprovisional application filed under 35 USC 111(a) or be a national stage entry under 35 USC 371, exclusive of any reissue applications.

In order to qualify for special status, the following requirements must be met. 1) The application must have no more than 3 independent claims and no more than 20 total claims. 2) The application must not contain any multiple dependent claims. 3) The petition must state the basis for seeking special status, i.e., the claimed invention either: A) materially enhances the quality of the environment or B) materially contributes to: i) the discovery or development of renewable energy resources, ii) the more efficient utilization and conservation of energy resources, or iii) greenhouse gas emission reduction. 4) If the disclosure is not clear on its face that the claimed invention materially contributes under category (A) or (B), the petition must be accompanied by a statement by the applicant, assignee, or an attorney/agent registered to practice before the Office explaining how the materiality standard is met. 5) A statement that applicant will agree to

make an election without traverse in a telephonic interview if a restriction requirement is made by the examiner. 6) The petition to make special must be filed electronically. 7) The petition must be filed at least one day prior to the date that a first Office Action appears in the Patent Application Information Retrieval (PAIR) system. 8) The petition must be accompanied by a request for early publication in compliance with 37 CFR 1.219 and include the publication fee as set forth in 37 CFR 1.18(d).

The requirement for a fee for consideration of the petition to make special for applications pertaining to Green Technologies has been waived.

The petition lacks items 4 and 8.

In regard to item 4, petitioner asserts that the invention contributes to the development of solar renewable energy resources by making land available for solar installations, reducing cost that make solar more attractive and reducing environmental impact. Petitioner's statement of special status, and article by Denholm and Margolis have been considered but not found persuasive. Petitioner's assertion is merely a speculation on how the instant invention can be used to incentivize use solar panels or contributes to development of solar energy as the yoke is merely a support structure which plays no part in the process of converting sunlight into electrical power or the utilization of solar energy/electrical power. As stated in the notice, the materiality standard does not permit an applicant to speculate as to how a hypothetical end-user might specially apply the invention in a manner than could materially contribute to category (A) or (B). *Also see MPEP § 708.02 (VI).* Accordingly, it is unclear as to how the claimed invention would materially contribute to category (B), and it is not agreed that the application on its face meets that materiality standard.

In regard to item 8, petitioner should note that in addition to a request for the early publication of the present application in compliance with 37 CFR 1.219, petitioner is required to submit the publication fee as set forth in 37 CFR 1.18(d). Since the publication fee has not been received, the petition is dismissed.

Any reconsideration of this decision should be submitted through the USPTO electronic filing system, EFS-Web, and selecting the document description of "Petition for Green Tech Pilot" on the EFS-Web screen.

Telephone inquiries concerning this decision should be directed to Lanna Mai at 571-272-6867.

The application is being forwarded to the Technology Center Art Unit 3633 for action in its regular turn.

/Lanna Mai/

Lanna Mai
Quality Assurance Specialist
Technology Center 3600

UNITED STATES PATENT AND TRADEMARK OFFICE

UNITED STATES DEPARTMENT OF COMMERCE
United States Patent and Trademark Office
Address: COMMISSIONER FOR PATENTS
P.O. Box 1450
Alexandria, Virginia 22313-1450
www.uspto.gov

APPLICATION NO.	FILING DATE	FIRST NAMED INVENTOR	ATTORNEY DOCKET NO.	CONFIRMATION NO.
13/172,351	06/29/2011	Takaaki HAYASHI	126684.01	7129

25944 7590 07/19/2011
OLIFF & BERRIDGE, PLC
P.O. BOX 320850
ALEXANDRIA, VA 22320-4850

EXAMINER
PHAN, HUY Q

ART UNIT	PAPER NUMBER
2858	

NOTIFICATION DATE	DELIVERY MODE
07/19/2011	ELECTRONIC

Please find below and/or attached an Office communication concerning this application or proceeding.

The time period for reply, if any, is set in the attached communication.

Notice of the Office communication was sent electronically on above-indicated "Notification Date" to the following e-mail address(es):

OfficeAction25944@oliff.com
jarmstrong@oliff.com

UNITED STATES PATENT AND TRADEMARK OFFICE

Commissioner for Patents
United States Patent and Trademark Office
P.O. Box 1450
Alexandria, VA 22313-1450
www.uspto.gov

OLIFF & BERRIDGE, PLC
P.O. BOX 320850
ALEXANDRIA VA 22320-4850

In re Application of
Takaaki HAYASHI
Application No.: 13/172,351
Filed: 29 June 2011
Attorney Docket No.: 126684.01
For: ELECTRO-OPTICAL DEVICE

: DECISION ON REQUEST TO
: PARTICIPATE IN THE PATENT
: PROSECUTION HIGHWAY
: PROGRAM AND PETITION
: TO MAKE SPECIAL UNDER
: 37 CFR 1.102(a)

This is a decision on the request to participate in the Patent Prosecution Highway (PPH) program and the petition under 37 CFR 1.102(a), filed 08 July 2011, to make the above-identified application special.

The request and petition are **GRANTED**.

Discussion

A grantable request to participate in the PPH pilot program and petition to make special require:

1. The U.S. application is

    a. a Paris Convention application which either
        i. validly claims priority under 35 U.S.C. 119(a) and 37 CFR 1.55 to one or more applications filed in the JPO, or
        ii. validly claims priority to a PCT application that contains no priority claims, or
    b. a national stage application under the PCT (an application which entered the national stage in the U.S. from a PCT international application after compliance with 35 U.S.C. 371), which PCT application
        i. validly claims priority to an application filed in the JPO, or
        ii. validly claims priority to a PCT application that contains no priority claims, or
        iii. contains no priority claim, or
    c. a so-called bypass application filed under 35 U.S.C. 111(a) which validly claims benefit under 35 U.S.C. 120 to a PCT application, which PCT application
        i. validly claims priority to an application filed in the JPO, or
        ii. validly claims priority to a PCT application that contains no priority claims, or
        iii. contains no priority claim;

2. Applicant must submit a copy of:
    a. The allowable/patentable claim(s) from the JPO application(s);
    b. An English translation of the allowable/patentable claim(s) and
    c. A statement that the English translation is accurate;
3. Applicant must:
    a. Ensure all the claims in the U.S. application must sufficiently correspond or be amended to sufficiently correspond to the allowable/patentable claim(s) in the JPO application(s) and
    b. Submit a claims correspondence table in English;
4. Examination of the U.S. application has not begun;
5. Applicant must submit:
    a. Documentation of prior office action:
        i. a copy of the office action(s) just prior to the "Decision to Grant a Patent" from each of the JPO application(s) containing the allowable/patentable claim(s) or
        ii. if the allowable/patentable claims(s) are from a "Notification of Reasons for Refusal" then the Notification of Reasons for Refusal or
        iii. if the JPO application is a first action allowance then no office action from the JPO is necessary should be indicated on the request/petition form;
    b. An English language translation of the JPO Office action from (5)(a)(i)-(ii) above
    c. A statement that the English translation is accurate;
6. Applicant must submit:
    a. An IDS listing the documents cited by the JPO examiner in the JPO office action (unless already submitted in this application)
    b. Copies of the documents except U.S. patents or U.S. patent application publications (unless already submitted in this application);

The request to participate in the PPH pilot program and petition comply with the above requirements. Accordingly, the above-identified application has been accorded "special" status.

Inquiries concerning this decision should be directed to Lee W. Young at 571-272-4549.

All other inquiries concerning the examination or status of the application is accessible in the PAIR system at http://www.uspto.gov/ebc.index.html.

This application will be forwarded to the examiner for action on the merits commensurate with this decision once this application's formality reviews have been completed.

Lee W. Young
TQAS Technology Center 2800 - Semiconductors,
Electrical & Optical Systems & Components

Doc Code: PET.GREEN
Document Description: Petition for Green Tech Pilot

PTO/SB/420 (11-10)
Approved for use through 01/31/2011. OMB 0651-0062
U.S. Patent and Trademark Office; U. S. DEPARTMENT OF COMMERCE
Under the Paperwork Reduction Act of 1995, no persons are required to respond to a collection of information unless it displays a valid OMB control number.

PETITION TO MAKE SPECIAL UNDER THE GREEN TECHNOLOGY PILOT PROGRAM

Attorney Docket Number: 15650-000002/US/COB	Application Number (if known): Not yet assigned	Filing date: Herewith
First Named Inventor: Mahendra Dassanayake et al.		
Title: SOLID STATE LIGHT ASSEMBLY HAVING LIGHT REDIRECTION ELEMENTS		

APPLICANT HEREBY REQUESTS TO PARTICIPATE IN THE GREEN TECHNOLOGY PILOT PROGRAM FOR THE ABOVE-IDENTIFIED APPLICATION. See Instruction Sheet on page 2.

This petition must be timely filed electronically using the USPTO electronic filing system, EFS-Web.

1. By filing this petition:

   Applicant is requesting early publication: Applicant hereby requests early publication under 37 CFR 1.219 and the publication fee set forth in 37 CFR 1.18(d) accompanies this request.

2. By filing this petition: applicant is agreeing to make an election without traverse in a telephonic interview and elect an invention that meets the eligibility requirements for the Green Technology Pilot Program, if the Office determines that the claims are not obviously directed to a single invention. See Instruction Sheet.

3. This request is accompanied by statements of special status for the eligibility requirement.

4. The application contains no more than three (3) independent claims and twenty (20) total claims.

5. The application does not contain any multiple dependent claims.

6. Other attachments: MATERIALITY STATEMENT

Signature	Date June 29, 2011
Name (Print/Typed) Kevin G. Mierzwa	Registration Number 38,049

Note: *Signatures of all the inventors or assignees of record of the entire interest or their representative(s) are required in accordance with 37 CFR 1.33 and 11.18. Please see 37 CFR 1.4(d) for the form of the signature. If necessary, submit multiple forms for more than one signature see below*.*

[X] *Total of 2 forms are submitted.

The information is required to obtain or retain a benefit by the public which is to file (and by the USPTO to process) an application. Confidentiality is governed by 35 U.S.C. 122 and 37 CFR 1.11 and 1.14. This collection is estimated to take 12 hours to complete, including gathering, preparing, and submitting the completed application form to the USPTO. Time will vary depending upon the individual case. Any comments on the amount of time you require to complete this form and/or suggestions for reducing this burden, should be sent to the Chief Information Officer, U.S. Patent and Trademark Office, U.S. Department of Commerce, P.O. Box 1450, Alexandria, VA 22313-1450. DO NOT SEND FEES OR COMPLETED FORMS TO THIS ADDRESS. **SEND TO: Commissioner for Patents, P.O. Box 1450, Alexandria, VA 22313-1450.**

If you need assistance in completing the form, call 1-800-PTO-9199 and select option 2.

PATENT

IN THE UNITED STATES PATENT AND TRADEMARK OFFICE

Application No.:	Not yet assigned
Confirmation No.:	Not yet assigned
Filing Date:	Herewith
Applicant:	Mahendra Dassanayake et al.
Group Art Unit:	Not yet assigned
Examiner:	Not yet assigned
Title:	SOLID STATE LIGHT ASSEMBLY HAVING LIGHT REDIRECTION ELEMENTS
Attorney Docket:	15650-000002/US/COB

Commissioner for Patents
P.O. Box 1450
Alexandria, Virginia 22313-1450

MATERIALITY STATEMENT

Sir:

The present patent application is directed to a configuration for a light bulb that uses light-emitting diodes as the light source. The use of light-emitting diodes significantly reduces the amount of energy used for a desired light output. The amount of energy is reduced compared to conventional filament bulbs as well as compact fluorescent bulbs. Therefore, the present application materially contributes to energy conservation.

Respectfully submitted,

Dated: June 29, 2011

By: _____
Kevin G. Mierzwa, Reg. No. 38,049

HARNESS, DICKEY & PIERCE, P.L.C.
P.O. Box 828
Bloomfield Hills, Michigan 48303
(248) 641-1600

KGM/tp

15834575.1

UNITED STATES PATENT AND TRADEMARK OFFICE

UNITED STATES DEPARTMENT OF COMMERCE
United States Patent and Trademark Office
Address: COMMISSIONER FOR PATENTS
P.O. Box 1450
Alexandria, Virginia 22313-1450
www.uspto.gov

APPLICATION NO.	FILING DATE	FIRST NAMED INVENTOR	ATTORNEY DOCKET NO.	CONFIRMATION NO.
13/172,379	06/29/2011	Mahendra Dassanayake	15650-000002/US/COB	7185

27572 7590 07/28/2011
HARNESS, DICKEY & PIERCE, P.L.C.
P.O. BOX 828
BLOOMFIELD HILLS, MI 48303

EXAMINER

ART UNIT	PAPER NUMBER
2875	

NOTIFICATION DATE	DELIVERY MODE
07/28/2011	ELECTRONIC

Please find below and/or attached an Office communication concerning this application or proceeding.

The time period for reply, if any, is set in the attached communication.

Notice of the Office communication was sent electronically on above-indicated "Notification Date" to the following e-mail address(es):

docketingpt@hdp.com
kgaliotti@hdp.com
stolson@hdp.com

UNITED STATES PATENT AND TRADEMARK OFFICE

Commissioner for Patents
United States Patent and Trademark Office
P.O. Box 1450
Alexandria, VA 22313-1450
www.uspto.gov

HARNESS, DICKEY & PIERCE, P.L.C.
P.O. BOX 828
BLOOMFIELD HILLS MI 48303

In re Application of	:	
Dassanayake et al.	:	DECISION ON PETITION
Application No. 13/172379	:	TO MAKE SPECIAL UNDER
Filed: June 29, 2011	:	THE GREEN TECHNOLOGY
Attorney Docket No. 15650-000002/US/COB	:	PILOT PROGRAM

This is a decision on the petition under 37 CFR 1.102, filed on June 29, 2011, to make the above-identified application special under the pilot program for applications pertaining to Green Technologies as set forth 74 Federal Register Notice 64666 (December 8, 2009) and amended by 75 Federal Register Notice 28554 (May 21, 2010) and 75 Federal Register Notice 69049 (November 10, 2010).

The petition is **GRANTED**.

A grantable petition to make an application special under 37 CFR 1.102 and the pilot program as set forth in 74 FR 64666 must be directed to a nonprovisional application filed under 35 USC 111(a) or be a national stage entry under 35 USC 371, exclusive of any reissue applications.

In order to qualify for special status, the following requirements must be met. 1) The application must have no more than 3 independent claims and no more than 20 total claims. 2) The application must not contain any multiple dependent claims. 3) The petition must state the basis for seeking special status, i.e., the claimed invention either: A) materially enhances the quality of the environment or B) materially contributes to: i) the discovery or development of renewable energy resources, ii) the more efficient utilization and conservation of energy resources, or iii) greenhouse gas emission reduction. 4) If the disclosure is not clear on its face that the claimed invention materially contributes under category (A) or (B), the petition must be accompanied by a statement by the applicant, assignee, or an attorney/agent registered to practice before the Office explaining how the materiality standard is met. 5) A statement that applicant will agree to make an election without traverse in a telephonic interview if a restriction requirement is made by the examiner. 6) The petition to make special must be filed electronically. 7) The petition must be filed at least one day prior to the date that a first Office Action appears in the Patent Application Information Retrieval (PAIR) system. 8) The petition must be accompanied by a request for early publication in compliance with 37 CFR 1.219 and include the publication fee as set forth in 37 CFR 1.18(d).

The requirement for a fee for consideration of the petition to make special for applications pertaining to Green Technologies has been waived.

The instant petition complies with items 1 – 8 above. Accordingly, the above-identified application has been accorded "special" status.

Telephone inquires concerning this decision should be directed to Colleen Dunn at 571-272-1170.

The application is being forwarded to the appropriate Technology Center Art Unit for action on the merits commensurate with this decision.

For

Colleen Dunn
Quality Assurance Specialist
Technology Center 2800

Doc Code: PET.GREEN
Document Description: Petition for Green Tech Pilot

PTO/SB/420 (11-10)
Approved for use through 01/31/2011. OMB 0651-0062
U.S. Patent and Trademark Office; U. S. DEPARTMENT OF COMMERCE
Under the Paperwork Reduction Act of 1995, no persons are required to respond to a collection of information unless it displays a valid OMB control number.

PETITION TO MAKE SPECIAL UNDER THE GREEN TECHNOLOGY PILOT PROGRAM

Attorney Docket Number: 15650-000002/US/COC	Application Number (if known): Not yet assigned	Filing date: Herewith
First Named Inventor: Mahendra Dassanayake et al.		
Title: SOLID STATE LIGHT ASSEMBLY WITH CONTROL CIRCUIT		

APPLICANT HEREBY REQUESTS TO PARTICIPATE IN THE GREEN TECHNOLOGY PILOT PROGRAM FOR THE ABOVE-IDENTIFIED APPLICATION. See Instruction Sheet on page 2.

This petition must be timely filed electronically using the USPTO electronic filing system, EFS-Web.

1. By filing this petition:

   Applicant is requesting early publication: Applicant hereby requests early publication under 37 CFR 1.219 and the publication fee set forth in 37 CFR 1.18(d) accompanies this request.

2. By filing this petition: applicant is agreeing to make an election without traverse in a telephonic interview and elect an invention that meets the eligibility requirements for the Green Technology Pilot Program, if the Office determines that the claims are not obviously directed to a single invention. See Instruction Sheet.

3. This request is accompanied by statements of special status for the eligibility requirement.

4. The application contains no more than three (3) independent claims and twenty (20) total claims.

5. The application does not contain any multiple dependent claims.

6. Other attachments: MATERIALITY STATEMENT

Signature	Date June 29, 2011
Name (Print/Typed) Kevin G. Mierzwa	Registration Number 38,049

Note: *Signatures of all the inventors or assignees of record of the entire interest or their representative(s) are required in accordance with 37 CFR 1.33 and 11.18. Please see 37 CFR 1.4(d) for the form of the signature. If necessary, submit multiple forms for more than one signature see below*.*

☒ *Total of 2 forms are submitted.

The information is required to obtain or retain a benefit by the public which is to file (and by the USPTO to process) an application. Confidentiality is governed by 35 U.S.C. 122 and 37 CFR 1.11 and 1.14. This collection is estimated to take 12 hours to complete, including gathering, preparing, and submitting the completed application form to the USPTO. Time will vary depending upon the individual case. Any comments on the amount of time you require to complete this form and/or suggestions for reducing this burden, should be sent to the Chief Information Officer, U.S. Patent and Trademark Office, U.S. Department of Commerce, P.O. Box 1450, Alexandria, VA 22313-1450. DO NOT SEND FEES OR COMPLETED FORMS TO THIS ADDRESS. **SEND TO: Commissioner for Patents, P.O. Box 1450, Alexandria, VA 22313-1450.**

If you need assistance in completing the form, call 1-800-PTO-9199 and select option 2.

PATENT

IN THE UNITED STATES PATENT AND TRADEMARK OFFICE

Application No.:	Not yet assigned
Confirmation No.:	Not yet assigned
Filing Date:	Herewith
Applicant:	Mahendra Dassanayake et al.
Group Art Unit:	Not yet assigned
Examiner:	Not yet assigned
Title:	SOLID STATE LIGHT ASSEMBLY WITH CONTROL CIRCUIT
Attorney Docket:	15650-000002/US/COC

Commissioner for Patents
P.O. Box 1450
Alexandria, Virginia 22313-1450

MATERIALITY STATEMENT

Sir:

The present patent application is directed to a configuration for a light bulb that uses light-emitting diodes as the light source. The use of light-emitting diodes significantly reduces the amount of energy used for a desired light output. The amount of energy is reduced compared to conventional filament bulbs as well as compact fluorescent bulbs. Therefore, the present application materially contributes to energy conservation.

Respectfully submitted,

Dated: June 29, 2011

By: _____
Kevin G. Mierzwa, Reg. No. 38,049

HARNESS, DICKEY & PIERCE, P.L.C.
P.O. Box 828
Bloomfield Hills, Michigan 48303
(248) 641-1600

KGM/tp

15834595.1

UNITED STATES PATENT AND TRADEMARK OFFICE

UNITED STATES DEPARTMENT OF COMMERCE
United States Patent and Trademark Office
Address: COMMISSIONER FOR PATENTS
P.O. Box 1450
Alexandria, Virginia 22313-1450
www.uspto.gov

APPLICATION NO.	FILING DATE	FIRST NAMED INVENTOR	ATTORNEY DOCKET NO.	CONFIRMATION NO.
13/172,435	06/29/2011	Mahendra Dassanayake	15650-000002/US/COC	7282

27572 7590 07/28/2011
HARNESS, DICKEY & PIERCE, P.L.C.
P.O. BOX 828
BLOOMFIELD HILLS, MI 48303

EXAMINER

ART UNIT	PAPER NUMBER
2875	

NOTIFICATION DATE	DELIVERY MODE
07/28/2011	ELECTRONIC

Please find below and/or attached an Office communication concerning this application or proceeding.

The time period for reply, if any, is set in the attached communication.

Notice of the Office communication was sent electronically on above-indicated "Notification Date" to the following e-mail address(es):

docketingpt@hdp.com
kgaliotti@hdp.com
stolson@hdp.com

UNITED STATES PATENT AND TRADEMARK OFFICE

Commissioner for Patents
United States Patent and Trademark Office
P.O. Box 1450
Alexandria, VA 22313-1450
www.uspto.gov

HARNESS, DICKEY & PIERCE, P.L.C.
P.O. BOX 828
BLOOMFIELD HILLS MI 48303

In re Application of	:	
Dassanayake et al.	:	DECISION ON PETITION
Application No. 13/172435	:	TO MAKE SPECIAL UNDER
Filed: June 29, 2011	:	THE GREEN TECHNOLOGY
Attorney Docket No. 15650-000002/US/COC	:	PILOT PROGRAM

This is a decision on the petition under 37 CFR 1.102, filed on June 29, 2011, to make the above-identified application special under the pilot program for applications pertaining to Green Technologies as set forth 74 Federal Register Notice 64666 (December 8, 2009) and amended by 75 Federal Register Notice 28554 (May 21, 2010) and 75 Federal Register Notice 69049 (November 10, 2010).

The petition is **GRANTED**.

A grantable petition to make an application special under 37 CFR 1.102 and the pilot program as set forth in 74 FR 64666 must be directed to a nonprovisional application filed under 35 USC 111(a) or be a national stage entry under 35 USC 371, exclusive of any reissue applications.

In order to qualify for special status, the following requirements must be met. 1) The application must have no more than 3 independent claims and no more than 20 total claims. 2) The application must not contain any multiple dependent claims. 3) The petition must state the basis for seeking special status, i.e., the claimed invention either: A) materially enhances the quality of the environment or B) materially contributes to: i) the discovery or development of renewable energy resources, ii) the more efficient utilization and conservation of energy resources, or iii) greenhouse gas emission reduction. 4) If the disclosure is not clear on its face that the claimed invention materially contributes under category (A) or (B), the petition must be accompanied by a statement by the applicant, assignee, or an attorney/agent registered to practice before the Office explaining how the materiality standard is met. 5) A statement that applicant will agree to make an election without traverse in a telephonic interview if a restriction requirement is made by the examiner. 6) The petition to make special must be filed electronically. 7) The petition must be filed at least one day prior to the date that a first Office Action appears in the Patent Application Information Retrieval (PAIR) system. 8) The petition must be accompanied by a request for early publication in compliance with 37 CFR 1.219 and include the publication fee as set forth in 37 CFR 1.18(d).

The requirement for a fee for consideration of the petition to make special for applications pertaining to Green Technologies has been waived.

The instant petition complies with items 1 – 8 above. Accordingly, the above-identified application has been accorded "special" status.

Telephone inquires concerning this decision should be directed to Colleen Dunn at 571-272-1170.

The application is being forwarded to the appropriate Technology Center Art Unit for action on the merits commensurate with this decision.

For Colleen Dunn
Quality Assurance Specialist
Technology Center 2800

Doc Code: PET.GREEN
Document Description: Petition for Green Tech Pilot

PTO/SB/420 (11-10)
Approved for use through 01/31/2011. OMB 0651-0062
U.S. Patent and Trademark Office; U. S. DEPARTMENT OF COMMERCE
Under the Paperwork Reduction Act of 1995, no persons are required to respond to a collection of information unless it displays a valid OMB control number.

PETITION TO MAKE SPECIAL UNDER THE GREEN TECHNOLOGY PILOT PROGRAM

Attorney Docket Number: 15650-000002/US/COD	Application Number (if known): Not yet assigned	Filing date: Herewith
First Named Inventor: Mahendra Dassanayake et al.		
Title: SOLID STATE TUBE LIGHT ASSEMBLY		

APPLICANT HEREBY REQUESTS TO PARTICIPATE IN THE GREEN TECHNOLOGY PILOT PROGRAM FOR THE ABOVE-IDENTIFIED APPLICATION. See Instruction Sheet on page 2.

This petition must be timely filed electronically using the USPTO electronic filing system, EFS-Web.

1. By filing this petition:

   Applicant is requesting early publication: Applicant hereby requests early publication under 37 CFR 1.219 and the publication fee set forth in 37 CFR 1.18(d) accompanies this request.

2. By filing this petition: applicant is agreeing to make an election without traverse in a telephonic interview and elect an invention that meets the eligibility requirements for the Green Technology Pilot Program, if the Office determines that the claims are not obviously directed to a single invention. See Instruction Sheet.

3. This request is accompanied by statements of special status for the eligibility requirement.

4. The application contains no more than three (3) independent claims and twenty (20) total claims.

5. The application does not contain any multiple dependent claims.

6. Other attachments: MATERIALITY STATEMENT

Signature	Date June 29, 2011
Name (Print/Typed) Kevin G. Mierzwa	Registration Number 38,049

Note: *Signatures of all the inventors or assignees of record of the entire interest or their representative(s) are required in accordance with 37 CFR 1.33 and 11.18. Please see 37 CFR 1.4(d) for the form of the signature. If necessary, submit multiple forms for more than one signature see below*.*

[X] *Total of 2 forms are submitted.

The information is required to obtain or retain a benefit by the public which is to file (and by the USPTO to process) an application. Confidentiality is governed by 35 U.S.C. 122 and 37 CFR 1.11 and 1.14. This collection is estimated to take 12 hours to complete, including gathering, preparing, and submitting the completed application form to the USPTO. Time will vary depending upon the individual case. Any comments on the amount of time you require to complete this form and/or suggestions for reducing this burden, should be sent to the Chief Information Officer, U.S. Patent and Trademark Office, U.S. Department of Commerce, P.O. Box 1450, Alexandria, VA 22313-1450. DO NOT SEND FEES OR COMPLETED FORMS TO THIS ADDRESS. **SEND TO: Commissioner for Patents, P.O. Box 1450, Alexandria, VA 22313-1450.**

If you need assistance in completing the form, call 1-800-PTO-9199 and select option 2.

PATENT

IN THE UNITED STATES PATENT AND TRADEMARK OFFICE

Application No.:	Not yet assigned
Confirmation No.:	Not yet assigned
Filing Date:	Herewith
Applicant:	Mahendra Dassanayake et al.
Group Art Unit:	Not yet assigned
Examiner:	Not yet assigned
Title:	SOLID STATE TUBE LIGHT ASSEMBLY
Attorney Docket:	15650-000002/US/COD

Commissioner for Patents
P.O. Box 1450
Alexandria, Virginia 22313-1450

MATERIALITY STATEMENT

Sir:

The present patent application is directed to a configuration for a light bulb that uses light-emitting diodes as the light source. The use of light-emitting diodes significantly reduces the amount of energy used for a desired light output. The amount of energy is reduced compared to conventional filament bulbs as well as compact fluorescent bulbs. Therefore, the present application materially contributes to energy conservation.

Respectfully submitted,

Dated: June 29, 2011

By: _____
Kevin G. Mierzwa, Reg. No. 38,049

HARNESS, DICKEY & PIERCE, P.L.C.
P.O. Box 828
Bloomfield Hills, Michigan 48303
(248) 641-1600

KGM/tp

15834614.1

UNITED STATES PATENT AND TRADEMARK OFFICE

UNITED STATES DEPARTMENT OF COMMERCE
United States Patent and Trademark Office
Address: COMMISSIONER FOR PATENTS
P.O. Box 1450
Alexandria, Virginia 22313-1450
www.uspto.gov

APPLICATION NO.	FILING DATE	FIRST NAMED INVENTOR	ATTORNEY DOCKET NO.	CONFIRMATION NO.
13/172,480	06/29/2011	Mahendra Dassanayake	15650-000002/US/COD	7369

27572 7590 07/28/2011
HARNESS, DICKEY & PIERCE, P.L.C.
P.O. BOX 828
BLOOMFIELD HILLS, MI 48303

EXAMINER

ART UNIT	PAPER NUMBER
2875	

NOTIFICATION DATE	DELIVERY MODE
07/28/2011	ELECTRONIC

Please find below and/or attached an Office communication concerning this application or proceeding.

The time period for reply, if any, is set in the attached communication.

Notice of the Office communication was sent electronically on above-indicated "Notification Date" to the following e-mail address(es):

docketingpt@hdp.com
kgaliotti@hdp.com
stolson@hdp.com

UNITED STATES PATENT AND TRADEMARK OFFICE

Commissioner for Patents
United States Patent and Trademark Office
P.O. Box 1450
Alexandria, VA 22313-1450
www.uspto.gov

HARNESS, DICKEY & PIERCE, P.L.C.
P.O. BOX 828
BLOOMFIELD HILLS MI 48303

In re Application of	:	
Dassanayake et al.	:	DECISION ON PETITION
Application No. 13/172480	:	TO MAKE SPECIAL UNDER
Filed: June 29, 2011	:	THE GREEN TECHNOLOGY
Attorney Docket No. 15650-000002/US/COD	:	PILOT PROGRAM

This is a decision on the petition under 37 CFR 1.102, filed on June 29, 2011, to make the above-identified application special under the pilot program for applications pertaining to Green Technologies as set forth 74 Federal Register Notice 64666 (December 8, 2009) and amended by 75 Federal Register Notice 28554 (May 21, 2010) and 75 Federal Register Notice 69049 (November 10, 2010).

The petition is **GRANTED**.

A grantable petition to make an application special under 37 CFR 1.102 and the pilot program as set forth in 74 FR 64666 must be directed to a nonprovisional application filed under 35 USC 111(a) or be a national stage entry under 35 USC 371, exclusive of any reissue applications.

In order to qualify for special status, the following requirements must be met. 1) The application must have no more than 3 independent claims and no more than 20 total claims. 2) The application must not contain any multiple dependent claims. 3) The petition must state the basis for seeking special status, i.e., the claimed invention either: A) materially enhances the quality of the environment or B) materially contributes to: i) the discovery or development of renewable energy resources, ii) the more efficient utilization and conservation of energy resources, or iii) greenhouse gas emission reduction. 4) If the disclosure is not clear on its face that the claimed invention materially contributes under category (A) or (B), the petition must be accompanied by a statement by the applicant, assignee, or an attorney/agent registered to practice before the Office explaining how the materiality standard is met. 5) A statement that applicant will agree to make an election without traverse in a telephonic interview if a restriction requirement is made by the examiner. 6) The petition to make special must be filed electronically. 7) The petition must be filed at least one day prior to the date that a first Office Action appears in the Patent Application Information Retrieval (PAIR) system. 8) The petition must be accompanied by a request for early publication in compliance with 37 CFR 1.219 and include the publication fee as set forth in 37 CFR 1.18(d).

The requirement for a fee for consideration of the petition to make special for applications pertaining to Green Technologies has been waived.

The instant petition complies with items 1 – 8 above. Accordingly, the above-identified application has been accorded "special" status.

Telephone inquires concerning this decision should be directed to Colleen Dunn at 571-272-1170.

The application is being forwarded to the appropriate Technology Center Art Unit for action on the merits commensurate with this decision.

For

Colleen Dunn
Quality Assurance Specialist
Technology Center 2800

UNITED STATES PATENT AND TRADEMARK OFFICE

Commissioner for Patents
United States Patent and Trademark Office
P.O. Box 1450
Alexandria, VA 22313-1450
www.uspto.gov

LOCKE LORD BISSELL & LIDDELL, LLP
600 TRAVIS SUITE 2800
HOUSTON, TX 77002-3095

MAILED
MAR 22 2012
OFFICE OF PETITIONS

In re Application of	:	
Robert J. Buske, et. al.	:	
Application No. 13/172,507	:	DECISION ON PETITION
Filed: June 29, 2011	:	TO WITHDRAW FROM
Attorney Docket No. 0016422-260US	:	RECORD

This is a decision on the Request to Withdraw as attorney or agent of record under 37 CFR §§ 1.36(b) or 37 CFR 10.40, filed March 7, 2012.

The request is **NOT APPROVED**.

A review of the file record shows that D. Brit Nelson and the attorneys/agents associated with Customer Number 22904 does not have power of attorney in this patent application, but have been employed or otherwise engaged in the proceedings in this patent application. Accordingly, the request to withdraw under 37 CFR § 1.36(b) is not applicable.

The Office will no longer approve requests from practitioners to withdraw from application where the requesting practitioners is acting, or has acted, in a representative capacity pursuant to 37 CFR 1.34. In these situations, the practitioner is responsible for the correspondence the practitioner files in the application while acting in a representative capacity. As such, there is no need for the practitioner to obtain the Office's permission to withdraw from representation. However, practitioners acting in a representative capacity, like practitioners who have power of attorney in the application, remain responsible for noncompliance with 37 CFR 1.56, as well as 37 CFR 10.18, with respect to the documents they file.

The Office strongly encourages practitioner(s) requesting withdrawal from representation as practitioner of record in an application to review the record to determine whether he or she is, in fact, of record and how he or she was made of record. The practitioner(s) should determine whether he or she was appointed by naming each practitioner individually or through the use of a Customer Number. If the practitioner(s) were appointed by a specific designation, then the request should ask that each specified practitioner be withdrawn and should list each practitioner(s) in the Request. Similarly, if practitioner(s) was appointed by a Customer Number, the practitioner(s) should ensure that the correct number is provided in the Request. Additionally, as set forth in MPEP 403(I), the addition or deletion of a

practitioner from the list of persons associated with a Customer Number should be done by way of a *Request for Customer umber Data Change* (PTO/SB/124) and not a *Request for Withdrawal As Attorney or Agent and Change of Correspondence Address* (PTO/SB/83).

Additionally, the request cannot be approved because the requested change in the correspondence address is improper.

The Office will no longer change the correspondence address to that of a new practitioner unless the Request is accompanied by a power of attorney to a new practitioner (e.g., Form PTO/SB/82). However, the Office will only accept correspondence address changes to the most current address information provided for the assignee of the entire interest *that properly became of record under 37 CFR 3.71,* or, if no assignee of the entire interest has properly been made of record, the most current address information provided for the first named inventor.

All future communications from the Office will continue to be directed to the above-listed address until otherwise properly notified by the applicant.

Telephone inquiries concerning this decision should be directed to the undersigned at (571) 272-3226.

/Andrea Smith/
Andrea Smith
Petitions Examiner
Office of Petitions

cc: SUTTON MCAUGHAN DEAVER, PLLC
3 RIVERWAY, SUITE 900
HOUSTON, TX 77056

Doc Code: PET.GREEN
Document Description: Petition for Green Tech Pilot

PTO/SB/420 (11-10)
Approved for use through 01/31/2011. OMB 0651-0062
U.S. Patent and Trademark Office; U. S. DEPARTMENT OF COMMERCE
Under the Paperwork Reduction Act of 1995, no persons are required to respond to a collection of information unless it displays a valid OMB control number.

PETITION TO MAKE SPECIAL UNDER THE GREEN TECHNOLOGY PILOT PROGRAM

Attorney Docket Number: 15650-000002/US/COE	Application Number (if known): Not yet assigned	Filing date: Herewith
First Named Inventor: Mahendra Dassanayake et al.		
Title: SOLID STATE SPOT LIGHT ASSEMBLY		

APPLICANT HEREBY REQUESTS TO PARTICIPATE IN THE GREEN TECHNOLOGY PILOT PROGRAM FOR THE ABOVE-IDENTIFIED APPLICATION. See Instruction Sheet on page 2.

This petition must be timely filed electronically using the USPTO electronic filing system, EFS-Web.

1. By filing this petition:

   Applicant is requesting early publication: Applicant hereby requests early publication under 37 CFR 1.219 and the publication fee set forth in 37 CFR 1.18(d) accompanies this request.

2. By filing this petition: applicant is agreeing to make an election without traverse in a telephonic interview and elect an invention that meets the eligibility requirements for the Green Technology Pilot Program, if the Office determines that the claims are not obviously directed to a single invention. See Instruction Sheet.

3. This request is accompanied by statements of special status for the eligibility requirement.

4. The application contains no more than three (3) independent claims and twenty (20) total claims.

5. The application does not contain any multiple dependent claims.

6. Other attachments: MATERIALITY STATEMENT

Signature	Date June 29, 2011
Name (Print/Typed) Kevin G. Mierzwa	Registration Number 38,049

Note: *Signatures of all the inventors or assignees of record of the entire interest or their representative(s) are required in accordance with 37 CFR 1.33 and 11.18. Please see 37 CFR 1.4(d) for the form of the signature. If necessary, submit multiple forms for more than one signature see below*.*

[X] *Total of 2 forms are submitted.

The information is required to obtain or retain a benefit by the public which is to file (and by the USPTO to process) an application. Confidentiality is governed by 35 U.S.C. 122 and 37 CFR 1.11 and 1.14. This collection is estimated to take 12 hours to complete, including gathering, preparing, and submitting the completed application form to the USPTO. Time will vary depending upon the individual case. Any comments on the amount of time you require to complete this form and/or suggestions for reducing this burden, should be sent to the Chief Information Officer, U.S. Patent and Trademark Office, U.S. Department of Commerce, P.O. Box 1450, Alexandria, VA 22313-1450. DO NOT SEND FEES OR COMPLETED FORMS TO THIS ADDRESS. **SEND TO: Commissioner for Patents, P.O. Box 1450, Alexandria, VA 22313-1450.**

If you need assistance in completing the form, call 1-800-PTO-9199 and select option 2.

PATENT

IN THE UNITED STATES PATENT AND TRADEMARK OFFICE

Application No.:	Not yet assigned
Confirmation No.:	Not yet assigned
Filing Date:	Herewith
Applicant:	Mahendra Dassanayake et al.
Group Art Unit:	Not yet assigned
Examiner:	Not yet assigned
Title:	SOLID STATE SPOT LIGHT ASSEMBLY
Attorney Docket:	15650-000002/US/COE

Commissioner for Patents
P.O. Box 1450
Alexandria, Virginia 22313-1450

MATERIALITY STATEMENT

Sir:

The present patent application is directed to a configuration for a light bulb that uses light-emitting diodes as the light source. The use of light-emitting diodes significantly reduces the amount of energy used for a desired light output. The amount of energy is reduced compared to conventional filament bulbs as well as compact fluorescent bulbs. Therefore, the present application materially contributes to energy conservation.

Respectfully submitted,

Dated: June 29, 2011

By: _____
Kevin G. Mierzwa, Reg. No. 38,049

HARNESS, DICKEY & PIERCE, P.L.C.
P.O. Box 828
Bloomfield Hills, Michigan 48303
(248) 641-1600

KGM/tp

15834620.1

UNITED STATES PATENT AND TRADEMARK OFFICE

UNITED STATES DEPARTMENT OF COMMERCE
United States Patent and Trademark Office
Address: COMMISSIONER FOR PATENTS
P.O. Box 1450
Alexandria, Virginia 22313-1450
www.uspto.gov

APPLICATION NO.	FILING DATE	FIRST NAMED INVENTOR	ATTORNEY DOCKET NO.	CONFIRMATION NO.
13/172,511	06/29/2011	Mahendra Dassanayake	15650-000002/US/COE	7430

27572 7590 07/28/2011
HARNESS, DICKEY & PIERCE, P.L.C.
P.O. BOX 828
BLOOMFIELD HILLS, MI 48303

EXAMINER

ART UNIT	PAPER NUMBER
2875	

NOTIFICATION DATE	DELIVERY MODE
07/28/2011	ELECTRONIC

Please find below and/or attached an Office communication concerning this application or proceeding.

The time period for reply, if any, is set in the attached communication.

Notice of the Office communication was sent electronically on above-indicated "Notification Date" to the following e-mail address(es):

docketingpt@hdp.com
kgaliotti@hdp.com
stolson@hdp.com

UNITED STATES PATENT AND TRADEMARK OFFICE

Commissioner for Patents
United States Patent and Trademark Office
P.O. Box 1450
Alexandria, VA 22313-1450
www.uspto.gov

HARNESS, DICKEY & PIERCE, P.L.C.
P.O. BOX 828
BLOOMFIELD HILLS MI 48303

In re Application of	:	
Dassanayake et al.	:	DECISION ON PETITION
Application No. 13/172511	:	TO MAKE SPECIAL UNDER
Filed: June 29, 2011	:	THE GREEN TECHNOLOGY
Attorney Docket No. 15650-000002/US/COE	:	PILOT PROGRAM

This is a decision on the petition under 37 CFR 1.102, filed on June 29, 2011, to make the above-identified application special under the pilot program for applications pertaining to Green Technologies as set forth 74 Federal Register Notice 64666 (December 8, 2009) and amended by 75 Federal Register Notice 28554 (May 21, 2010) and 75 Federal Register Notice 69049 (November 10, 2010).

The petition is **GRANTED**.

A grantable petition to make an application special under 37 CFR 1.102 and the pilot program as set forth in 74 FR 64666 must be directed to a nonprovisional application filed under 35 USC 111(a) or be a national stage entry under 35 USC 371, exclusive of any reissue applications.

In order to qualify for special status, the following requirements must be met. 1) The application must have no more than 3 independent claims and no more than 20 total claims. 2) The application must not contain any multiple dependent claims. 3) The petition must state the basis for seeking special status, i.e., the claimed invention either: A) materially enhances the quality of the environment or B) materially contributes to: i) the discovery or development of renewable energy resources, ii) the more efficient utilization and conservation of energy resources, or iii) greenhouse gas emission reduction. 4) If the disclosure is not clear on its face that the claimed invention materially contributes under category (A) or (B), the petition must be accompanied by a statement by the applicant, assignee, or an attorney/agent registered to practice before the Office explaining how the materiality standard is met. 5) A statement that applicant will agree to make an election without traverse in a telephonic interview if a restriction requirement is made by the examiner. 6) The petition to make special must be filed electronically. 7) The petition must be filed at least one day prior to the date that a first Office Action appears in the Patent Application Information Retrieval (PAIR) system. 8) The petition must be accompanied by a request for early publication in compliance with 37 CFR 1.219 and include the publication fee as set forth in 37 CFR 1.18(d).

The requirement for a fee for consideration of the petition to make special for applications pertaining to Green Technologies has been waived.

The instant petition complies with items 1 – 8 above. Accordingly, the above-identified application has been accorded "special" status.

Telephone inquires concerning this decision should be directed to Colleen Dunn at 571-272-1170.

The application is being forwarded to the appropriate Technology Center Art Unit for action on the merits commensurate with this decision.

For

Colleen Dunn
Quality Assurance Specialist
Technology Center 2800

Doc Code: PET.GREEN
Document Description: Petition for Green Tech Pilot

PTO/SB/420 (05-10)
Approved for use through 05/31/2010. OMB 0651-0062
U.S. Patent and Trademark Office; U. S. DEPARTMENT OF COMMERCE
Under the Paperwork Reduction Act of 1995, no persons are required to respond to a collection of information unless it displays a valid OMB control number.

PETITION TO MAKE SPECIAL UNDER THE GREEN TECHNOLOGY PILOT PROGRAM

Attorney Docket Number: 2832-0632PUS1	Application Number (if known): 13/172,585	Filing date: June 29, 2011
First Named Inventor: Kangseok MOON		
Title: SOLAR CELL MODULE AND MANUFACTURING METHOD THEREOF		

APPLICANT HEREBY REQUESTS TO PARTICIPATE IN THE GREEN TECHNOLOGY PILOT PROGRAM FOR THE ABOVE-IDENTIFIED APPLICATION. See Instruction Sheet on page 2.

This petition must be timely filed electronically using the USPTO electronic filing system, EFS-Web.

1. By filing this petition:

   Applicant is requesting early publication: Applicant hereby requests early publication under 37 CFR 1.219 and the publication fee set forth in 37 CFR 1.18(d) accompanies this request.

2. By filing this petition: applicant is agreeing to make an election without traverse in a telephonic interview and elect an invention that meets the eligibility requirements set forth in the notice titled "Pilot Program for Green Technologies Including Greenhouse Gas Reduction," as modified by the notice titled "Elimination of Classification Requirement in the Green Technology Pilot Program," each of which was published in the Federal Register, if the Office determines that the claims are not obviously directed to a single invention.

3. This request is accompanied by statements of special status for the eligibility requirement.

4. The application contains no more than three (3) independent claims and twenty (20) total claims.

5. The application does not contain any multiple dependent claims.

6. Other attachments: _____

Signature	Date October 28, 2011
Name (Print/Typed) Esther H. Chong	Registration Number 40953

Note: *Signatures of all the inventors or assignees of record of the entire interest or their representative(s) are required in accordance with 37 CFR 1.33 and 11.18. Please see 37 CFR 1.4(d) for the form of the signature. If necessary, submit multiple forms for more than one signature, see below*.*

☐ *Total of _____ forms are submitted.

The information is required to obtain or retain a benefit by the public which is to file (and by the USPTO to process) an application. Confidentiality is governed by 35 U.S.C. 122 and 37 CFR 1.11 and 1.14. This collection is estimated to take 12 hours to complete, including gathering, preparing, and submitting the completed application form to the USPTO. Time will vary depending upon the individual case. Any comments on the amount of time you require to complete this form and/or suggestions for reducing this burden, should be sent to the Chief Information Officer, U.S. Patent and Trademark Office, U.S. Department of Commerce, P.O. Box 1450, Alexandria, VA 22313-1450. DO NOT SEND FEES OR COMPLETED FORMS TO THIS ADDRESS. **SEND TO: Commissioner for Patents, P.O. Box 1450, Alexandria, VA 22313-1450.**

If you need assistance in completing the form, call 1-800-PTO-9199 and select option 2.

4

Docket No.: 2832-0632PUS1
(Patent)

IN THE UNITED STATES PATENT AND TRADEMARK OFFICE

Patent Application of:	Kangseok MOON		
Application No.:	13/172,585	Confirmation No.:	7563
Filed:	June 29, 2011	Art Unit:	1725
For:	SOLAR CELL MODULE AND MANUFACTURING METHOD THEREOF	Examiner:	Not Yet Assigned

STATEMENT OF SPECIAL STATUS FOR THE ELIGIBILITY REQUIREMENT UNDER THE GREEN TECHNOLOGY PILOT PROGRAM

Commissioner for Patents
P.O. Box 1450
Alexandria, VA 22313-1450

Sir:

In support of the Petition to Make Special Under the Green Technology Pilot Program, it is respectfully submitted that the basis for the requested special status is that the invention claimed in the above-identified patent application materially contributes to the development of renewable energy sources and/or green house gas emission reduction. Specifically, the claimed invention relates to a solar cell.

Additionally, by filing this petition, the applicant agrees to make an election without traverse in a telephone interview and elect an invention that meets the eligibility requirements set for in the notice titled "Pilot Program for Green Technologies Including Greenhouse Gas Reduction," as modified by the notice titled "Elimination of Classification Requirement in the Green Technology Pilot Program," each of which was published in the Federal Register, if the Office determines that the claims are not obviously directed to a single invention.

It is also submitted that this application meets the eligibility requirements to participate in the Green Technology Pilot Program, as listed in the attached Petition to Make Special Under the Green Technology Pilot Program.

Accordingly, it is respectfully requested that the Petition be granted.

Should there be any outstanding matters that need to be resolved in the present application, the Examiner is respectfully requested to contact Seth S. Kim, Reg. No. 54,577, at the telephone number of the undersigned below to conduct an interview in an effort to expedite prosecution in connection with the present application.

If necessary, the Director is hereby authorized in this, concurrent, and future replies to charge any fees required during the pendency of the above-identified application or credit any overpayment to Deposit Account No. 02-2448.

Dated: OCT 28 2011

Respectfully submitted,

By _____

Esther H. Chong
Registration No.: 40953
BIRCH, STEWART, KOLASCH & BIRCH, LLP
8110 Gatehouse Road, Suite 100 East
P.O. Box 747
Falls Church, VA 22040-0747
703-205-8000

UNITED STATES PATENT AND TRADEMARK OFFICE

UNITED STATES DEPARTMENT OF COMMERCE
United States Patent and Trademark Office
Address: COMMISSIONER FOR PATENTS
P.O. Box 1450
Alexandria, Virginia 22313-1450
www.uspto.gov

APPLICATION NO.	FILING DATE	FIRST NAMED INVENTOR	ATTORNEY DOCKET NO.	CONFIRMATION NO.
13/172,585	06/29/2011	Kangseok MOON	2832-0632PUS1	7563

2292 7590 11/09/2011
BIRCH STEWART KOLASCH & BIRCH
PO BOX 747
FALLS CHURCH, VA 22040-0747

EXAMINER

ART UNIT	PAPER NUMBER
1725	

NOTIFICATION DATE	DELIVERY MODE
11/09/2011	ELECTRONIC

Please find below and/or attached an Office communication concerning this application or proceeding.

The time period for reply, if any, is set in the attached communication.

Notice of the Office communication was sent electronically on above-indicated "Notification Date" to the following e-mail address(es):

mailroom@bskb.com

UNITED STATES PATENT AND TRADEMARK OFFICE

Commissioner for Patents
United States Patent and Trademark Office
P.O. Box 1450
Alexandria, VA 22313-1450
www.uspto.gov

BIRCH STEWART KOLASCH & BIRCH
PO BOX 747
FALLS CHURCH VA 22040-0747

Nov.09, 2011

In re Application of	:	
Son et al.	:	DECISION ON PETITION
Application No. 13/172,585	:	TO MAKE SPECIAL UNDER
Filed: 6/30/2011	:	THE GREEN TECHNOLOGY
Attorney Docket No. **2832-0632PUS1**	:	PILOT PROGRAM

This is a decision on the petition under 37 CFR 1.102, filed 10/28/2011, to make the above-identified application special under the pilot program for applications pertaining to Green Technologies as set forth in 74 Federal Register Notice 64666 (December 8, 2009) and amended by 75 Federal Register Notice 28554 (May 21, 2010) and 75 Federal Register Notice 69049 (November 10, 2010).

The petition is **GRANTED**.

A grantable petition to make an application special under 37 CFR 1.102 and the pilot program as set forth in 74 FR 64666 must be directed to a nonprovisional application filed under 35 USC 111(a) or be a national stage entry under 35 USC 371, exclusive of any reissue applications.

In order to qualify for special status, the following requirements must be met. 1) The application must have no more than 3 independent claims and no more than 20 total claims. 2) The application must not contain any multiple dependent claims. 3) The petition must state the basis for seeking special status, i.e., the claimed invention either: A) materially enhances the quality of the environment or B) materially contributes to: i) the discovery or development of renewable energy resources, ii) the more efficient utilization and conservation of energy resources, or iii) greenhouse gas emission reduction. 4) If the disclosure is not clear on its face that the claimed invention materially contributes under category (A) or (B), the petition must be accompanied by a statement by the applicant, assignee, or an attorney/agent registered to practice before the Office explaining how the materiality standard is met. 5) A statement that applicant will agree to make an election without traverse in a telephonic interview if a restriction requirement is made by the examiner. 6) The petition to make special must be filed electronically. 7) The petition must be filed at least one day prior to the date that a first Office Action appears in the Patent Application Information Retrieval (PAIR) system. 8) The petition must be accompanied by a request for early publication in compliance with 37 CFR 1.219 and include the publication fee as set forth in 37 CFR 1.18(d).

The requirement for a fee for consideration of the petition to make special for applications pertaining to Green Technologies has been waived.

The instant petition complies with items 1 – 8 above. Accordingly, the above-identified application has been accorded "special" status.

Telephone inquires concerning this decision should be directed to Tom Dunn at 571-272-1171.

The application is being forwarded to the Technology Center Art Unit 1725 for action on the merits commensurate with this decision.

/Tom Dunn/

Tom Dunn
Quality Assurance Specialist
Technology Center 1700

UNITED STATES PATENT AND TRADEMARK OFFICE

UNITED STATES DEPARTMENT OF COMMERCE
United States Patent and Trademark Office
Address: COMMISSIONER FOR PATENTS
P.O. Box 1450
Alexandria, Virginia 22313-1450
www.uspto.gov

APPLICATION NO.	FILING DATE	FIRST NAMED INVENTOR	ATTORNEY DOCKET NO.	CONFIRMATION NO.
13/172,628	06/29/2011	Shouling CUI	4202-11502	7649

97698 7590 12/21/2011
Huawei Technologies Co., Ltd.
c/o Conley Rose, P.C.
5601 Granite Parkway
Plano, TX 75024

EXAMINER
BUI, HANH THI MINH

ART UNIT	PAPER NUMBER
2192	

MAIL DATE	DELIVERY MODE
12/21/2011	PAPER

Please find below and/or attached an Office communication concerning this application or proceeding.

The time period for reply, if any, is set in the attached communication.

UNITED STATES PATENT AND TRADEMARK OFFICE

Commissioner for Patents
United States Patent and Trademark Office
P.O. Box 1450
Alexandria, VA 22313-1450
www.uspto.gov

MAILED

DEC 20 2011

TECHNOLOGY CENTER 2100

S. Marc Balban
Cantor Colburn LLP
20 Church Street, 22nd Floor
Hartford, CT 06103

In re Application of:
Inventor Name: Shouling Cui et al.
Serial No.: 13/172,628
Filed: June 29, 2011
Docket: 4202-11502
Title: METHOD, SYSTEM, TERMINAL AND DEVICE MANAGEMENT SERVER FOR INSTALLING SOFTWARE COMPONENTS

DECISION ON PETITION TO MAKE SPECIAL FOR NEW APPLICATION UNDER 37 C.F.R. § 1.102 & M.P.E.P. § 708.02

This is a decision on the petition filed on June 29, 2011 to make the above-identified application special for accelerated examination procedure under 37 C.F.R. § 1.102(d).

The petition to make the application special is **DISMISSED**.

REGULATION AND PRACTICE

A grantable petition to make special under 37 C.F.R. § 1.102(d) and pursuant to the "Change to Practice for Petitions in Patent Applications to Make Special and for Accelerated Examination" published in the Federal Register on June 26, 2006 (71 Fed. Reg. 36323), must satisfy the following conditions:

I. Conditions Regarding the Application:

1. the application must be a non-reissue utility or design application filed under 37 CFR 1.111(a);
2. the application, the petition and the required fees must be filed electronically using the USPTO's electronic filing system (EFS), or EFS-web; if not filed electronically, a statement asserting that EFS and EFS-web were not available during the normal business hours.
3. at the time of filing, the application must be complete under 37 CFR 1.51 and in condition for examination;
4. the application must contain three or fewer independent claims and twenty or fewer total claims and the claims must be directed to a single invention.

II. Conditions Regarding the Petition:

The petition must:

1. be filed with the application;

2. include a statement that applicant agrees not to separately argue the patentability of any independent claim during any appeal in the application;

3. include a statement that applicant agrees to make an election without traverse in a telephone interview.

4. include a statement that applicant agrees to conduct such an interview when requested by the examiner.

5. include a statement, made based on a good faith belief, that a preexamination search in compliance with the following requirements, was conducted, including an identification of the filed of search by United States class and subclass, where applicable, and for database searches, the search logic or chemical structure or sequence used as a query, the name of the file(s) searched and the database service, and the date of the search.

The preexamination search must:

5.1 involve U.S. patents and patent application publications, foreign patent documents, and non-patent literature, unless the applicant can justify with reasonable certainty that no references more pertinent than those already identified are likely to be found in the eliminated sources and includes such a justification with this statement;

5.2. be directed to the claimed invention and encompass all of the features of the claims, giving the claims the broadest reasonable expectation;

5.3. encompass the disclosed features that may be claimed.

6. must provide in support of the petition an accelerated examination support document. An accelerated examination support document must include:

6.1. an information disclosure statement (IDS) in compliance with 37 CFR 1.98 citing each reference deemed most closely related to the subject matter of each of the claims;

6.2. an identification of all the limitations in the claims that are disclosed by the reference specifying where the limitation is disclosed in the cited reference;

6.3. a detailed explanation of how each of the claims is patentable over the references cited with particularity required by 37 CFR 1.111(b) and (c);

6.4. a concise statement of the utility of the invention as defined in each of the independent claims (unless the application is a design application);

6.5. a showing of where each limitation of the claims finds support under 35 USC 112, first paragraph, in the written description of the specification. If applicable, the showing must also identify: (1) each means- (or step) plus-function claim element that invokes consideration under 35 USC 112, sixth paragraph; and (2) the structure, material, or acts in the specification that corresponds to each means- (or step) plus-function claim element that invokes consideration under 35 USC 112, sixth paragraph; if the application claims the benefit of one or more applications under title 35, United States Code, the showing must also include where each limitation of the claims finds support under 35 USC 112, first paragraph, in each such application in which such supports exists;

6.6. an identification of any cited references that may be disqualified under 35 USC 103(c).

REVIEW OF FACTS

The petition meets the requirements of items I: 1-4, and II: 1-4 and 6. However, the petition fails to comply with item II: 5.2 of condition as discussed below. Therefore, the petition fails to meet the required conditions to be accorded special status under the accelerated examination procedure.

Regarding the requirement of MPEP § 708.02(a) (I.)(H)[1] and item II.5.2 above, the pre-examination search must be directed to the (instant) claimed invention and encompass all of the features of the claims. The Pre-Examination Search Report lists subclasses in classes 280, 370, 379, 701, 705, 707, 709, 710, and 715. However, the application is currently classified in 717/178.000 and as the invention is directed to installing or upgrading software, a search of US class/subclasses 717/168-178 is appropriate. Correction is required.

DECISION

For the above-stated reasons, the petition is DISMISSED.

Petitioner is given a single opportunity to perfect the petition. Any request for reconsideration of this decision must be submitted within 1 (one) month or 30 (thirty) days, whichever is longer, (no extension of time under 37 CFR 1.136(a)) from the date of this decision in order to be considered timely. In addition, any request for reconsideration must address the deficiencies indicated above.

Petitioner is reminded that, upon granting of the special status of the application on request for reconsideration, the application will be processed expeditiously. However, due to the dismissal of the instant petition, examination may not be completed within twelve months of the filing date of the application.

Any inquiry regarding this decision should be directed Gail Hayes, Quality Assurance Specialist, at (571) 272-3591.

/Gail Hayes/

Gail Hayes, Quality Assurance Specialist
Technology Center 2100

[1] MPEP 8th ed. rev 5 August 2006

UNITED STATES PATENT AND TRADEMARK OFFICE

UNITED STATES DEPARTMENT OF COMMERCE
United States Patent and Trademark Office
Address: COMMISSIONER FOR PATENTS
P.O. Box 1450
Alexandria, Virginia 22313-1450
www.uspto.gov

APPLICATION NO.	FILING DATE	FIRST NAMED INVENTOR	ATTORNEY DOCKET NO.	CONFIRMATION NO.
13/172,652	06/29/2011	Zexin Liu	4202-13300	7690

97698 7590 09/13/2011
Huawei Technologies Co., Ltd.
c/o Conley Rose, P.C.
5601 Granite Parkway
Plano, TX 75024

EXAMINER
NGUYEN, KHAI M

ART UNIT	PAPER NUMBER
2819	

MAIL DATE	DELIVERY MODE
09/13/2011	PAPER

Please find below and/or attached an Office communication concerning this application or proceeding.

The time period for reply, if any, is set in the attached communication.

UNITED STATES PATENT AND TRADEMARK OFFICE

Commissioner for Patents
United States Patent and Trademark Office
P.O. Box 1450
Alexandria, VA 22313-1450
www.uspto.gov

Huawei Technologies Co., Ltd.
c/o Conley Rose, P.C.
5601 Granite Parkway
Plano TX 75024

In re Application of: Zexin LIU, *et al.* Serial No.: 13/172652 Filed: 29 June 2011 Title: **TRANSIENT SIGNAL ENCODING METHOD AND DEVICE, DECODING METHOD AND DEVICE, AND PROCESSING SYSTEM**	DECISION ON PETITION TO MAKE SPECIAL FOR NEW APPLICATION UNDER 37 C.F.R. § 1.102 & M.P.E.P. § 708.02

This is a decision on the petition to make the above-identified application special for accelerated examination procedure under 37 C.F.R. § 1.102(d) filed 29 June 2011, and request for reconsideration of petition decision filed 25 July 2011.

The petition to make the application special is GRANTED.

The application is eligible for accelerated examination and the petition complies with the conditions for granting the application special status pursuant to the "Change to Practice for Petitions in Patent Applications to Make Special and for Accelerated Examination" published June 26, 2006, in the Federal Register. (71 Fed. Reg. 36323).

The prosecution of the instant application will be conducted expeditiously according to the following guidelines.

1. The application will be docketed to an examiner and taken up for action within two weeks of the date of this decision.

2. Restriction Practice:
   If the examiner determines that the claims are not directed to a single invention, a telephone request to elect one single invention will be made pursuant to MPEP 812.01. As a prerequisite to the grant of this petition, the applicant has agreed to make an oral election, by telephone, without traverse. If the applicant refuses to make an election without traverse, or the examiner cannot reach the applicant after a reasonable effort, the examiner will treat the first claimed invention (invention defined by claim 1) as having being constructively elected without traverse for examination.

3. Office action:
   If it is determined that, after appropriate consultation, there is a potential rejection or any other issue to be addressed, the examiner will telephone the applicant and arrange an interview to discuss and resolve the issue. An Office action, other than a Notice of Allowance and Fee(s) Due (Notice of Allowance), will not be issued unless either: 1) an interview was conducted but did not result in agreed to action that places the application in condition for allowance, or, 2) a determination is made that an interview would be unlikely to result in the application being placed in condition for allowance, and 3) an internal conference has been held to review any rejection of any claim.

4. Time for Reply:
   An Office action other than a Notice of Allowance or a final Office action will set a shortened statutory period of one month or thirty days, whichever is longer, for reply with no extension of time available under 37 CFR 1.136(a). Failure to timely file a reply within this non-extendible period for reply will result in the abandonment of the application.

5. Reply by Applicant:
   A timely reply to an Office action other than the Notice of Allowance must be submitted electronically via EFS or EFS-web and limited to addressing the rejections, objections and requirement made. Any amendment that attempts to: 1) add claims which would result in more than three pending independent claims or more than twenty pending total claims; 2) present claims not encompassed by the pre-examination search or an updated accelerated examination support document; or 3) present claims that are directed a non-elected invention or an invention other than that previously claimed and examined in the application, will be treated as not fully responsive and will not be entered.

   For any amendment to the claims (including any new claim) that is not encompassed by the accelerated examination support document, applicant must provide an updated accelerated examination support document that encompasses the amended or new claims at the time of filing of the amendment.

   To proceed expeditiously with the examination, it is recommended that a reply with amendments made to any claim or with any new claim being added be accompanied by an updated accelerated examination support document or a statement explaining how the amended or new claim is supported by the original accelerated examination support document.

6. Information Disclosure Statement (IDS):
   Any IDS filed during prosecution must be submitted electronically via EFS or EFS-web, accompanied by an updated accelerated examination support document, and be in compliance with 37 CFR 1.97 and 1.98.

7. Post-Allowance Processing:
   To expedite processing of the allowed application into a patent, the applicant must: 1) pay the required fees within one month of the date of the Notice of Allowance, and 2) not file any post allowance papers not required by the Office. In no event may the issue fee be paid and accepted later than three months from the date of the Notice of Allowance.

8. After-Final and Appeal Procedures:
   To expedite prosecution, after receiving the final Office action, applicant must: 1) promptly file a notice of appeal, an appeal brief and appeal fees; and 2) not request a pre-appeal brief conference.

   Any amendment, affidavit or other evidence filed after final Office action must comply with applicable rules and the requirements outlined in numbered paragraphs 5 and 6 above.

   On appeal, the application will proceed according to normal appeal procedures. After appeal, the application will again be treated special.

9. Proceedings Outside the Normal Examination Process:
   If the application becomes involved in a proceeding that is outside the normal examination process (e.g., a secrecy order, national security review, interference proceeding, petitions under 37 CFR 1.181, 182 or 183), the application will be treated special before and after such proceeding.

10. Final Disposition:
    The twelve month goal of this accelerated examination procedure ends with a final disposition. The mailing of a final Office action, a Notice of Allowance, the filing of a Notice of Appeal, or the filing of a Request for Continued Examination (RCE) is the final disposition.

If, during prosecution, a paper is not filed electronically using EFS-web, a reply is filed but is not fully responsive, the application is involved in an appeal, or a proceeding outside normal examination process, the application will still be examined expeditiously, however, the final disposition may occur more than twelve months from the filing of the application.

Any inquiry regarding this decision should be directed to Quality Assurance Specialist (QAS) Michael Day at (571) 272-1568.

/Michael Day/

Michael Day, QAS
Technology Center 2800
Semiconductors, Electrical and Optical
Systems and Components

Doc Code: PET.GREEN
Document Description: Petition for Green Tech Pilot

PTO/SB/420 (03-11)

PETITION TO MAKE SPECIAL UNDER THE GREEN TECHNOLOGY PILOT PROGRAM

Attorney Docket Number: 6073-0010	Application Number (if known):	Filing date:

First Named Inventor: Robert L. Doneker

Title: NOISE DAMPENING ENERGY EFFICIENT TAPE AND GASKET MATERIAL

APPLICANT HEREBY REQUESTS TO PARTICIPATE IN THE GREEN TECHNOLOGY PILOT PROGRAM FOR THE ABOVE-IDENTIFIED APPLICATION. See Instruction Sheet on page 2.

This petition must be timely filed electronically using the USPTO electronic filing system, EFS-Web.

1. By filing this petition:

   Applicant is requesting early publication: Applicant hereby requests early publication under 37 CFR 1.219 and the publication fee set forth in 37 CFR 1.18(d) accompanies this request.

2. By filing this petition: applicant is agreeing to make an election without traverse in a telephonic interview and elect an invention that meets the eligibility requirements for the Green Technology Pilot Program, if the Office determines that the claims are not obviously directed to a single invention. See Instruction Sheet.

3. This request is accompanied by statements of special status for the eligibility requirement.

4. The application contains no more than three (3) independent claims and twenty (20) total claims.

5. The application does not contain any multiple dependent claims.

6. Other attachments: _____

Signature	Date 6/29/2011
Name (Print/Typed) David A. Crowther	Registration Number 60426

Note: *Signatures of all the inventors or assignees of record of the entire interest or their representative(s) are required in accordance with 37 CFR 1.33 and 11.18. Please see 37 CFR 1.4(d) for the form of the signature. If necessary, submit multiple forms for more than one signature, see below*.*

☐ *Total of 1 forms are submitted.

If you need assistance in completing the form, call 1-800-PTO-9199 and select option 2.

PATENT APPLICATION
Attorney's Do. No. 6073-0010

IN THE UNITED STATES PATENT AND TRADEMARK OFFICE

In re application of:
Robert L. Doneker and Kent G. R. Thompson

For: NOISE DAMPENING ENERGY EFFICIENT
TAPE AND GASKET MATERIAL

Commissioner for Patents
P.O. Box 1450
Alexandria, Virginia 22313-1450

STATEMENT OF SPECIAL STATUS FOR THE ELIGIBILITY REQUIREMENT IN CONNECTION WITH THE GREEN TECHNOLOGY PILOT PROGRAM

This statement is filed in accordance with the requirements listed in petition form PTO/SB/420, filed herewith.

The invention of the subject patent application materially contributes to energy conservation by improving noise quality characteristics of enclosures by application of noise dampening tape and gasket materials so that circuit components within the enclosures can operate at lower voltages, thereby increasing energy efficiency in the circuit components, and reducing power consumption. It is clear on the face of the above-referenced application that the claimed invention materially contributes to energy conservation. In addition, by way of further support and explanation, energy efficiency is improved by reducing unwanted effects of electromagnetic noise either penetrating or escaping enclosures having sensitive circuitry, which permits the circuit components within the enclosure to be designed and constructed using lower voltage signals and fewer components. Millions of enclosures having circuit components disposed therein are used around the world and if even a fraction of those adopt the techniques disclosed herein, significant energy conservation can be achieved.

Another basis for the special status is that aspects of the invention materially contribute to greenhouse gas emission reduction. It is clear on the face of the above-referenced application that the claimed invention materially contributes to greenhouse gas emission reduction. In

addition, by way of further support and explanation, the noise dampening energy efficient tape and gasket materials reduce greenhouse gas emission by lessening the power requirements for operating the circuit components disposed within an enclosure. As a result, a reduction in greenhouse gas emissions produced by power plants is achieved by reducing the energy consumption needs of circuit components.

Applicant respectfully requests that a favorable decision on this Petition be granted and the application be accorded special status under the Green Technology Pilot Program.

Respectfully submitted,

20575
Customer No.

MARGER JOHNSON & McCOLLOM, P.C.

By _____
David A. Crowther
Registration No. 60,426

210 S.W. Morrison Street, Suite 400
Portland, Oregon 97204
Telephone: (503) 222-3613

UNITED STATES PATENT AND TRADEMARK OFFICE

UNITED STATES DEPARTMENT OF COMMERCE
United States Patent and Trademark Office
Address: COMMISSIONER FOR PATENTS
P.O. Box 1450
Alexandria, Virginia 22313-1450
www.uspto.gov

APPLICATION NO.	FILING DATE	FIRST NAMED INVENTOR	ATTORNEY DOCKET NO.	CONFIRMATION NO.
13/172,694	06/29/2011	Robert L. Doneker	6073-0010	7772

20575 7590 07/29/2011
MARGER JOHNSON & MCCOLLOM, P.C.
210 SW MORRISON STREET, SUITE 400
PORTLAND, OR 97204

EXAMINER

ART UNIT	PAPER NUMBER
2832	

NOTIFICATION DATE	DELIVERY MODE
07/29/2011	ELECTRONIC

Please find below and/or attached an Office communication concerning this application or proceeding.

The time period for reply, if any, is set in the attached communication.

Notice of the Office communication was sent electronically on above-indicated "Notification Date" to the following e-mail address(es):

docketing@techlaw.com

UNITED STATES PATENT AND TRADEMARK OFFICE

Commissioner for Patents
United States Patent and Trademark Office
P.O. Box 1450
Alexandria, VA 22313-1450
www.uspto.gov

MARGER JOHNSON & MCCOLLOM, P.C.
210 SW MORRISON STREET, SUITE 400
PORTLAND OR 97204

In re Application of	:	
Doneker et al.	:	DECISION ON PETITION
Application No. 13/172694	:	TO MAKE SPECIAL UNDER
Filed: June 29, 2011	:	THE GREEN TECHNOLOGY
Attorney Docket No. 6073-0010	:	PILOT PROGRAM

This is a decision on the petition under 37 CFR 1.102, filed on June 29, 2011, to make the above-identified application special under the pilot program for applications pertaining to Green Technologies as set forth 74 Federal Register Notice 64666 (December 8, 2009) and amended by 75 Federal Register Notice 28554 (May 21, 2010) and 75 Federal Register Notice 69049 (November 10, 2010).

The petition is **DISMISSED**.

If reconsideration of this decision is desired, a petition for reconsideration must be filed within ONE (1) MONTH OR THIRTY (30) DAYS from the mail date of this decision, whichever is longer. No extension of this time limit can be granted under 37 CFR 1.136(a) or (b). The petition for reconsideration should include an exhaustive attempt to provide the lacking item(s) noted below, since, after a decision on the petition for reconsideration, no further reconsideration or review of the matter will be undertaken by the Director.

A grantable petition to make an application special under 37 CFR 1.102 and the pilot program as set forth in 74 FR 64666 must be directed to a nonprovisional application filed under 35 USC 111(a) or be a national stage entry under 35 USC 371, exclusive of any reissue applications and be filed prior to the date of the notice, December 8, 2009.

In order to qualify for special status, the following requirements must be met. 1) The application must have no more than 3 independent claims and no more than 20 total claims. 2) The application must not contain any multiple dependent claims. 3) The petition must state the basis for seeking special status, i.e., the claimed invention either: A) materially enhances the quality of the environment or B) materially contributes to: i) the discovery or development of renewable energy resources, ii) the more efficient utilization and conservation of energy resources, or iii) greenhouse gas emission reduction. 4) If the disclosure is not clear on its face that the claimed invention materially contributes under category (A) or (B), the petition must be accompanied by a statement by the applicant, assignee, or an attorney/agent registered to practice before the

Office explaining how the materiality standard is met. 5) A statement that applicant will agree to make an election without traverse in a telephonic interview if a restriction requirement is made by the examiner. 6) The petition to make special must be filed electronically. 7) The petition must be filed at least one day prior to the date that a first Office Action appears in the Patent Application Information Retrieval (PAIR) system. 8) The petition must be accompanied by a request for early publication in compliance with 37 CFR 1.219 and include the publication fee as set forth in 37 CFR 1.18(d).

The requirement for a fee for consideration of the petition to make special for applications pertaining to Green Technologies has been waived.

The petition lacks item 4.

In regard to item 4, applicant's statement pertaining to how the materiality standard is met does not satisfy the requirements for this pilot. The instant petition includes a statement identifying the basis for the special status as contributing to the energy conservation and energy efficiency. The claims are directed to noise dampening gasket and noise dampening tape. The materiality standard does not permit an applicant to speculate as to how a hypothetical end-user might specially apply the invention in a manner that could contribute to the development of energy conservation. Any argument that the claimed invention can be used with for energy conservation or more efficient utilization of energy resources would be considered speculative as to how a hypothetical end-user might specially apply to the claimed tape or gasket invention.

Any reconsideration of this decision should be submitted through the USPTO electronic filing system, EFS-Web, and selecting the document description of "Petition for Green Tech Pilot" on the EFS-Web screen.

Telephone inquiries concerning this decision should be directed to Colleen Dunn at 571-272-1170.

The application is being forwarded to the appropriate Technology Center Art Unit for action on the merits commensurate with this decision.

/Colleen Dunn/

Colleen Dunn
Quality Assurance Specialist
Technology Center 2800

Doc Code: PET.GREEN
Document Description: Petition for Green Tech Pilot

PTO/SB/420 (03-11)

PETITION TO MAKE SPECIAL UNDER THE GREEN TECHNOLOGY PILOT PROGRAM

Attorney Docket Number: 6073-0011	Application Number (if known):	Filing date:

First Named Inventor: Robert L. Doneker

Title: NOISE DAMPENING ENERGY EFFICIENT ENCLOSURE, BULKHEAD AND BOOT MATERIAL

APPLICANT HEREBY REQUESTS TO PARTICIPATE IN THE GREEN TECHNOLOGY PILOT PROGRAM FOR THE ABOVE-IDENTIFIED APPLICATION. See Instruction Sheet on page 2.

This petition must be timely filed electronically using the USPTO electronic filing system, EFS-Web.

1. By filing this petition:

   Applicant is requesting early publication: Applicant hereby requests early publication under 37 CFR 1.219 and the publication fee set forth in 37 CFR 1.18(d) accompanies this request.

2. By filing this petition: applicant is agreeing to make an election without traverse in a telephonic interview and elect an invention that meets the eligibility requirements for the Green Technology Pilot Program, if the Office determines that the claims are not obviously directed to a single invention. See Instruction Sheet.

3. This request is accompanied by statements of special status for the eligibility requirement.

4. The application contains no more than three (3) independent claims and twenty (20) total claims.

5. The application does not contain any multiple dependent claims.

6. Other attachments: _____

Signature	Date 6/29/2011
Name (Print/Typed) David A. Crowther	Registration Number 60426

Note: *Signatures of all the inventors or assignees of record of the entire interest or their representative(s) are required in accordance with 37 CFR 1.33 and 11.18. Please see 37 CFR 1.4(d) for the form of the signature. If necessary, submit multiple forms for more than one signature, see below*.*

☐ *Total of 1 forms are submitted.

If you need assistance in completing the form, call 1-800-PTO-9199 and select option 2.

PATENT APPLICATION
Attorney's Do. No. 6073-0011

IN THE UNITED STATES PATENT AND TRADEMARK OFFICE

In re application of:
Robert L. Doneker and Kent G. R. Thompson

For: NOISE DAMPENING ENERGY EFFICIENT ENCLOSURE, BULKHEAD AND BOOT MATERIAL

Commissioner for Patents
P.O. Box 1450
Alexandria, Virginia 22313-1450

STATEMENT OF SPECIAL STATUS FOR THE ELIGIBILITY REQUIREMENT IN CONNECTION WITH THE GREEN TECHNOLOGY PILOT PROGRAM

This statement is filed in accordance with the requirements listed in petition form PTO/SB/420, filed herewith.

The invention of the subject patent application materially contributes to energy conservation by improving noise quality characteristics of enclosure walls so that circuit components within the enclosures can operate at lower voltages, thereby increasing energy efficiency in the circuit components, and reducing power consumption. It is clear on the face of the above-referenced application that the claimed invention materially contributes to energy conservation. In addition, by way of further support and explanation, energy efficiency is improved by reducing unwanted effects of electromagnetic noise either penetrating or escaping enclosures having sensitive circuitry, which permits the circuit components within the enclosure to be designed and constructed using lower voltage signals and fewer components. Millions of enclosures having circuit components disposed therein are used around the world and if even a fraction of those adopt the techniques disclosed herein, significant energy conservation can be achieved.

Another basis for the special status is that aspects of the invention materially contribute to greenhouse gas emission reduction. It is clear on the face of the above-referenced application that the claimed invention materially contributes to greenhouse gas emission reduction. In

addition, by way of further support and explanation, the noise dampening energy efficient enclosure, bulkhead, and boot materials reduce greenhouse gas emission by lessening the power requirements for operating the circuit components. As a result, a reduction in greenhouse gas emissions produced by power plants is achieved by reducing the energy consumption needs of circuit components.

Applicant respectfully requests that a favorable decision on this Petition be granted and the application be accorded special status under the Green Technology Pilot Program.

Respectfully submitted,

20575
Customer No.

MARGER JOHNSON & McCOLLOM, P.C.

By _____
David A. Crowther
Registration No. 60,426

210 S.W. Morrison Street, Suite 400
Portland, Oregon 97204
Telephone: (503) 222-3613

UNITED STATES PATENT AND TRADEMARK OFFICE

UNITED STATES DEPARTMENT OF COMMERCE
United States Patent and Trademark Office
Address: COMMISSIONER FOR PATENTS
P.O. Box 1450
Alexandria, Virginia 22313-1450
www.uspto.gov

APPLICATION NO.	FILING DATE	FIRST NAMED INVENTOR	ATTORNEY DOCKET NO.	CONFIRMATION NO.
13/172,729	06/29/2011	Robert L. Doneker	6073-0011	7849

20575 7590 08/01/2011
MARGER JOHNSON & MCCOLLOM, P.C.
210 SW MORRISON STREET, SUITE 400
PORTLAND, OR 97204

EXAMINER

ART UNIT	PAPER NUMBER
2832	

NOTIFICATION DATE	DELIVERY MODE
08/01/2011	ELECTRONIC

Please find below and/or attached an Office communication concerning this application or proceeding.

The time period for reply, if any, is set in the attached communication.

Notice of the Office communication was sent electronically on above-indicated "Notification Date" to the following e-mail address(es):

docketing@techlaw.com

UNITED STATES PATENT AND TRADEMARK OFFICE

Commissioner for Patents
United States Patent and Trademark Office
P.O. Box 1450
Alexandria, VA 22313-1450
www.uspto.gov

MARGER JOHNSON & MCCOLLOM, P.C.
210 SW MORRISON STREET, SUITE 400
PORTLAND OR 97204

In re Application of	:	
Doneker et al.	:	DECISION ON PETITION
Application No. 13/172729	:	TO MAKE SPECIAL UNDER
Filed: June 29, 2011	:	THE GREEN TECHNOLOGY
Attorney Docket No. 6073-0011	:	PILOT PROGRAM

This is a decision on the petition under 37 CFR 1.102, filed on June 29, 2011, to make the above-identified application special under the pilot program for applications pertaining to Green Technologies as set forth 74 Federal Register Notice 64666 (December 8, 2009) and amended by 75 Federal Register Notice 28554 (May 21, 2010) and 75 Federal Register Notice 69049 (November 10, 2010).

The petition is **DISMISSED**.

If reconsideration of this decision is desired, a petition for reconsideration must be filed within ONE (1) MONTH OR THIRTY (30) DAYS from the mail date of this decision, whichever is longer. No extension of this time limit can be granted under 37 CFR 1.136(a) or (b). The petition for reconsideration should include an exhaustive attempt to provide the lacking item(s) noted below, since, after a decision on the petition for reconsideration, no further reconsideration or review of the matter will be undertaken by the Director.

A grantable petition to make an application special under 37 CFR 1.102 and the pilot program as set forth in 74 FR 64666 must be directed to a nonprovisional application filed under 35 USC 111(a) or be a national stage entry under 35 USC 371, exclusive of any reissue applications and be filed prior to the date of the notice, December 8, 2009.

In order to qualify for special status, the following requirements must be met. 1) The application must have no more than 3 independent claims and no more than 20 total claims. 2) The application must not contain any multiple dependent claims. 3) The petition must state the basis for seeking special status, i.e., the claimed invention either: A) materially enhances the quality of the environment or B) materially contributes to: i) the discovery or development of renewable energy resources, ii) the more efficient utilization and conservation of energy resources, or iii) greenhouse gas emission reduction. 4) If the disclosure is not clear on its face that the claimed invention materially contributes under category (A) or (B), the petition must be accompanied by a statement by the applicant, assignee, or an attorney/agent registered to practice before the

Office explaining how the materiality standard is met. 5) A statement that applicant will agree to make an election without traverse in a telephonic interview if a restriction requirement is made by the examiner. 6) The petition to make special must be filed electronically. 7) The petition must be filed at least one day prior to the date that a first Office Action appears in the Patent Application Information Retrieval (PAIR) system. 8) The petition must be accompanied by a request for early publication in compliance with 37 CFR 1.219 and include the publication fee as set forth in 37 CFR 1.18(d).

The requirement for a fee for consideration of the petition to make special for applications pertaining to Green Technologies has been waived.

The petition lacks item 4.

In regard to item 4, applicant's statement pertaining to how the materiality standard is met does not satisfy the requirements for this pilot. The instant petition includes a statement identifying the basis for the special status as contributing to the energy conservation and energy efficiency. The claims are directed to noise dampening boot, enclosure, and material. The materiality standard does not permit an applicant to speculate as to how a hypothetical end-user might specially apply the claimed boot, enclosure, or material, in a manner that could contribute to the development of energy conservation. Any argument that the claimed invention can be used with for energy conservation or more efficient utilization of energy resources would be considered speculative as to how a hypothetical end-user might specially apply to the claimed boot, enclosure, or material.

Any reconsideration of this decision should be submitted through the USPTO electronic filing system, EFS-Web, and selecting the document description of "Petition for Green Tech Pilot" on the EFS-Web screen.

Telephone inquiries concerning this decision should be directed to Colleen Dunn at 571-272-1170.

The application is being forwarded to the appropriate Technology Center Art Unit for action on the merits commensurate with this decision.

/Colleen Dunn/

Colleen Dunn
Quality Assurance Specialist
Technology Center 2800

UNITED STATES PATENT AND TRADEMARK OFFICE

Commissioner for Patents
United States Patent and Trademark Office
P.O. Box 1450
Alexandria, VA 22313-1450
www.uspto.gov

salesforce.com/Kilpatrick Townsend & Stockton, LLP
The Landmark @ One Market Street, Suite #300
San Francisco CA 94105

MAILED
FEB 29 2012
OFFICE OF PETITIONS

In re Application of	:
Hersh et al.	:
Application No. 13/172,756	: DECISION ON PETITION
Filed: June 29, 2011	: UNDER 37 CFR 1.78(a)(6)
Attorney Docket No. 88262-798430 (441US)	:

This is a decision on the petition captioned under 37 CFR 1.182, filed January 31, 2012, which will be treated as a petition under 37 CFR 1.78(a)(6) to accept an unintentionally delayed claim under 35 U.S.C. § 119(e) for the benefit of priority to a prior-filed provisional application.

The petition is **DISMISSED.**

A petition under 37 CFR 1.78(a)(6) is only applicable to those applications filed on or after November 29, 2000. Further, the petition is appropriate only after expiration of the period specified in 37 CFR 1.78(a)(5)(ii) and must be filed during the pendency of the nonprovisional application. In addition, the petition must be accompanied by:

(1) the reference required by 35 U.S.C. § 119(e) and 37 CFR 1.78(a)(5)(i) to the prior-filed application, unless previously submitted;
(2) the surcharge set forth in § 1.17(t); and
(3) a statement that the entire delay between the date the claim was due under 37 CFR 1.78(a)(5)(ii) and the date the claim was filed was unintentional. The Director may require additional information where there is a question whether the delay was unintentional.

This pending nonprovisional application was filed on June 29, 2011, within twelve months of the filing date of the prior-filed provisional application, Application No. 61/350,855, which was filed on July 1, 2010, and for which priority is claimed. A reference to the prior-filed provisional application has been included in an amendment to the first sentence of the specification following the title and in an ADS.

However, the amendment is not acceptable as drafted since it improperly incorporates by reference the prior-filed application. Application No. 61/350,585, not Application No. 61/350,855, was incorporated by reference on June 29, 2011. An incorporation by reference statement added after an application's filing date is not effective because no new matter can be added to an application after its filing date (*see* 35 U.S.C. § 132(a)). If an incorporation by

reference statement is included in an amendment to the specification to add a benefit claim under 35 U.S.C. § 119(e) after the filing date of the application, the amendment would not be proper. When a benefit claim under 35 U.S.C. § 119(e) is submitted after the filing of an application, the reference to the prior application cannot include an incorporation by reference statement of the prior application. *See* Dart Industries v. Banner, 636 F.2d 684, 207 USPQ 273 (C.A.D.C. 1980). *Note* MPEP §§ 201.06(c) and 608.04(b).

37 CFR § 1.78(a)(6) requires a statement that the entire delay between the date the claim was due under 37 CFR § 1.78(a)(5)(ii) and the date the claim was filed was unintentional. Since the statement appearing in the petition varies from the required language, the statement is being construed as the statement required by 37 CFR §1.78(a)(6). If this is not a correct reading of the statement appearing in the petition, petitioner should promptly notify the Office.

Accordingly, before the petition under 37 CFR 1.78(a)(6) can be granted, a renewed petition under 37 CFR 1.78(a)(6) and a substitute amendment (complying with 37 CFR 1.121 and 37 CFR 1.76(b)(5)) deleting the incorporation by reference statement, are required.

Petitioners paid a $400.00 fee. However, the fee required by 37 CFR 1.78(a)(6)(ii) is $1,410.00. As authorized, the $1,010.00 balance will be charged to petitioners' deposit account.

Further correspondence with respect to this matter should be addressed as follows:

By mail: Mail Stop PETITIONS
Commissioner for Patents
Post Office Box 1450
Alexandria, VA 22313-1450

By hand: Customer Service Window
Mail Stop Petitions
Randolph Building
401 Dulany Street
Alexandria, VA 22314

By fax: (571) 273-8300
ATTN: Office of Petitions

By internet: EFS-Web
www.uspto.gov/ebc/efs_help.html

Any questions concerning this matter may be directed to the undersigned at (571) 272-3230.

Shirene Willis Brantley
Shirene Willis Brantley
Senior Petitions Attorney
Office of Petitions

UNITED STATES PATENT AND TRADEMARK OFFICE

Commissioner for Patents
United States Patent and Trademark Office
P.O. Box 1450
Alexandria, VA 22313-1450
www.uspto.gov

MAILED
SEP 23 2011
OFFICE OF PETITIONS

PAULY, DEVRIES SMITH &
DEFFNER, L.L.C.
Plaza VII-Suite 3000
45 South Seventh Street
MINNEAPOLIS MN 55402-1630

In re Application of	:	
Dallas et al.	:	
Application No. 13/173004	:	
Filing or 371(c) Date: 06/30/2011	:	ON PETITION
Attorney Docket Number:	:	
758.2034USD2	:	

This decision is in response to the "Petition Under 37 C.F.R. § 1.182 (MPEP 605.04(c) Requesting Name Change," filed August 31, 2011, requesting correction of the name of an inventor.

MPEP 201.03, Correction of Inventorship in an Application, provides

(B) Where a typographical or transliteration error in the spelling of an inventor 's name is discovered, the Office should simply be notified of the error. A new oath or declaration is not required. See MPEP § 605.04(g). Reference to the notification will be made on the previously filed oath or declaration.

However, "[e]xcept for correction of a typographical or transliteration error in the spelling of an inventor's name, a request to have the name changed from the typewritten version to the signed version or any other corrections in the name of the inventor(s) will not be entertained, unless accompanied by a petition under 37 CFR 1.182 together with an appropriate petition fee.[1]"

MPEP 605.04(b)

Applicant is further advised that

> Although 37 CFR 1.76 does not change the practice in MPEP § 201.03 and § 605.04(b) regarding correction of a typographical or transliteration error in the spelling of an inventor's name whereby all that is required is notification of the

[1] The fee for a petition under 37 CFR 1.182 is $400.00, effective December 8, 2004. The balance of the petition fee has been charged to Petitioner's deposit account as authorized in the fee transmittal filed with the application papers on November 17, 2007.

> error to the Office, the Office strongly encourages the filing of an application data sheet or a supplemental application data sheet to correct a typographical or transliteration error in the spelling of an inventor's name. A supplemental oath or declaration is not required. If applicant merely files a statement notifying the Office of the typographical or transliteration error in the spelling of an inventor's name without submitting an application data sheet or a supplemental application data sheet, any patent to issue is less likely to reflect the correct spelling since the spelling of the inventor's name is taken from the oath or declaration, or any subsequently filed application data sheet.

MPEP 601.05

The petition is hereby **granted**.

The name of inventor Lefei Ding has been changed to William Lefei Ding and the name William Lefei Ding has been entered and made of record in the above-identified application.

The application is being referred to Technology Center Art Unit 1776 for examination in the normal course of business.

Telephone inquiries concerning this matter should be directed to the undersigned at (571) 272-3232.

/DLW/

Derek L. Woods
Attorney
Office of Petitions

Enclosures: Corrected Filing Receipt

UNITED STATES PATENT AND TRADEMARK OFFICE

UNITED STATES DEPARTMENT OF COMMERCE
United States Patent and Trademark Office
Address: COMMISSIONER FOR PATENTS
P.O. Box 1450
Alexandria, Virginia 22313-1450
www.uspto.gov

APPLICATION NUMBER	FILING or 371(c) DATE	GRP ART UNIT	FIL FEE REC'D	ATTY.DOCKET.NO	TOT CLAIMS	IND CLAIMS
13/173,004	06/30/2011	1776	1090	758.2034USD2	15	1

CONFIRMATION NO. 8373

CORRECTED FILING RECEIPT

57557
PAULY, DEVRIES SMITH & DEFFNER, L.L.C.
Plaza VII-Suite 3000
45 South Seventh Street
MINNEAPOLIS, MN 55402-1630

OC000000049960584

Date Mailed: 09/22/2011

Receipt is acknowledged of this non-provisional patent application. The application will be taken up for examination in due course. Applicant will be notified as to the results of the examination. Any correspondence concerning the application must include the following identification information: the U.S. APPLICATION NUMBER, FILING DATE, NAME OF APPLICANT, and TITLE OF INVENTION. Fees transmitted by check or draft are subject to collection. Please verify the accuracy of the data presented on this receipt. **If an error is noted on this Filing Receipt, please submit a written request for a Filing Receipt Correction. Please provide a copy of this Filing Receipt with the changes noted thereon. If you received a "Notice to File Missing Parts" for this application, please submit any corrections to this Filing Receipt with your reply to the Notice. When the USPTO processes the reply to the Notice, the USPTO will generate another Filing Receipt incorporating the requested corrections**

Applicant(s)

Andrew James Dallas, Lakeville, MN;
William Lefei Ding, St. Paul, MN;
Jon Dennis Joriman, Little Canada, MN;
Dustin Zastera, St. Paul, MN;
James R. Giertz, Eden Prairie, MN;
Veli Engin Kalayci, Farmington, MN;

Assignment For Published Patent Application

DONALDSON COMPANY, INC., Minneapolis, MN

Power of Attorney: The patent practitioners associated with Customer Number 57557

Domestic Priority data as claimed by applicant

This application is a DIV of 12/648,772 12/29/2009
which is a DIV of 11/707,761 02/13/2007 PAT 7,655,070
which claims benefit of 60/773,067 02/13/2006

Foreign Applications (You may be eligible to benefit from the **Patent Prosecution Highway** program at the USPTO. Please see http://www.uspto.gov for more information.)

If Required, Foreign Filing License Granted: 07/12/2011

The country code and number of your priority application, to be used for filing abroad under the Paris Convention, is **US 13/173,004**

Projected Publication Date: 10/20/2011

Non-Publication Request: No

Early Publication Request: No

Title

WEB COMPRISING FINE FIBER AND REACTIVE, ADSORPTIVE OR ABSORPTIVE PARTICULATE

Preliminary Class

096

PROTECTING YOUR INVENTION OUTSIDE THE UNITED STATES

Since the rights granted by a U.S. patent extend only throughout the territory of the United States and have no effect in a foreign country, an inventor who wishes patent protection in another country must apply for a patent in a specific country or in regional patent offices. Applicants may wish to consider the filing of an international application under the Patent Cooperation Treaty (PCT). An international (PCT) application generally has the same effect as a regular national patent application in each PCT-member country. The PCT process **simplifies** the filing of patent applications on the same invention in member countries, but **does not result** in a grant of "an international patent" and does not eliminate the need of applicants to file additional documents and fees in countries where patent protection is desired.

Almost every country has its own patent law, and a person desiring a patent in a particular country must make an application for patent in that country in accordance with its particular laws. Since the laws of many countries differ in various respects from the patent law of the United States, applicants are advised to seek guidance from specific foreign countries to ensure that patent rights are not lost prematurely.

Applicants also are advised that in the case of inventions made in the United States, the Director of the USPTO must issue a license before applicants can apply for a patent in a foreign country. The filing of a U.S. patent application serves as a request for a foreign filing license. The application's filing receipt contains further information and guidance as to the status of applicant's license for foreign filing.

Applicants may wish to consult the USPTO booklet, "General Information Concerning Patents" (specifically, the section entitled "Treaties and Foreign Patents") for more information on timeframes and deadlines for filing foreign patent applications. The guide is available either by contacting the USPTO Contact Center at 800-786-9199, or it can be viewed on the USPTO website at http://www.uspto.gov/web/offices/pac/doc/general/index.html.

For information on preventing theft of your intellectual property (patents, trademarks and copyrights), you may wish to consult the U.S. Government website, http://www.stopfakes.gov. Part of a Department of Commerce initiative, this website includes self-help "toolkits" giving innovators guidance on how to protect intellectual property in specific countries such as China, Korea and Mexico. For questions regarding patent enforcement issues, applicants may call the U.S. Government hotline at 1-866-999-HALT (1-866-999-4158).

LICENSE FOR FOREIGN FILING UNDER

Title 35, United States Code, Section 184

Title 37, Code of Federal Regulations, 5.11 & 5.15

GRANTED

The applicant has been granted a license under 35 U.S.C. 184, if the phrase "IF REQUIRED, FOREIGN FILING LICENSE GRANTED" followed by a date appears on this form. Such licenses are issued in all applications where

the conditions for issuance of a license have been met, regardless of whether or not a license may be required as set forth in 37 CFR 5.15. The scope and limitations of this license are set forth in 37 CFR 5.15(a) unless an earlier license has been issued under 37 CFR 5.15(b). The license is subject to revocation upon written notification. The date indicated is the effective date of the license, unless an earlier license of similar scope has been granted under 37 CFR 5.13 or 5.14.

This license is to be retained by the licensee and may be used at any time on or after the effective date thereof unless it is revoked. This license is automatically transferred to any related applications(s) filed under 37 CFR 1.53(d). This license is not retroactive.

The grant of a license does not in any way lessen the responsibility of a licensee for the security of the subject matter as imposed by any Government contract or the provisions of existing laws relating to espionage and the national security or the export of technical data. Licensees should apprise themselves of current regulations especially with respect to certain countries, of other agencies, particularly the Office of Defense Trade Controls, Department of State (with respect to Arms, Munitions and Implements of War (22 CFR 121-128)); the Bureau of Industry and Security, Department of Commerce (15 CFR parts 730-774); the Office of Foreign AssetsControl, Department of Treasury (31 CFR Parts 500+) and the Department of Energy.

NOT GRANTED

No license under 35 U.S.C. 184 has been granted at this time, if the phrase "IF REQUIRED, FOREIGN FILING LICENSE GRANTED" DOES NOT appear on this form. Applicant may still petition for a license under 37 CFR 5.12, if a license is desired before the expiration of 6 months from the filing date of the application. If 6 months has lapsed from the filing date of this application and the licensee has not received any indication of a secrecy order under 35 U.S.C. 181, the licensee may foreign file the application pursuant to 37 CFR 5.15(b).

PTO/SB/20PCT-KR (06-10)
Approved for use through 01/31/2015. OMB 0651-0058
U.S. Patent and Trademark Office; U.S DEPARTMENT OF COMMERCE
Under the Paperwork Reduction Act of 1995, no persons are required to respond to a collection of information unless it displays a valid OMB control number.

REQUEST FOR PARTICIPATION IN THE PATENT COOPERATION TREATY – PATENT PROSECUTION HIGHWAY (PCT-PPH) PILOT PROGRAM BETWEEN THE KOREAN INTELLECTUAL PROPERTY OFFICE (KIPO) AND THE USPTO

Application No.:	13/173,337	First Named Inventor:	Liviu Movileanu
Filing Date:	06/30/2011	Attorney Docket No.:	156P222A
Title of the Invention:	Bioengineered Protein Pores		

THIS REQUEST FOR PARTICIPATION IN THE PCT-PPH PILOT PROGRAM ALONG WITH THE REQUIRED DOCUMENTS MUST BE SUBMITTED VIA EFS-WEB. INFORMATION REGARDING EFS-WEB IS AVAILABLE AT HTTP://WWW.USPTO.GOV/EBC/EFS_HELP.HTML.

APPLICANT HEREBY REQUESTS PARTICIPATION IN THE PCT-PPH PILOT PROGRAM AND PETITIONS TO MAKE THE ABOVE-IDENTIFIED APPLICATION SPECIAL UNDER THE PCT-PPH PILOT PROGRAM.

The above-identified application is (1) a national stage entry of the corresponding PCT application, or (2) a national stage entry of another PCT application which claims priority to the corresponding PCT application, or (3) a national application that claims domestic/ foreign priority to the corresponding PCT application, or (4) a national application which forms the basis for the priority claim in the corresponding PCT application, or (5) a continuing application of a U.S. application that satisfies one of (1) to (4) above, or (6) a U.S. application that claims domestic benefit to a U.S. provisional application which forms the basis for the priority claim in the corresponding PCT application.

The corresponding PCT application number(s) is/are: PCT/US2011/042532

The international filing date of the corresponding PCT application(s) is/are: June 30, 2011

I. List of Required Documents:

a. **A copy of the latest international work product (WO/ISA, WO/IPEA, or IPER) in the above-identified corresponding PCT application(s)**

- ☑ is attached.
- ☐ is not attached because the document is already in the U.S. application.

b. **A copy of all claims which were indicated as having novelty, inventive step and industrial applicability in the above-identified corresponding PCT application(s)**

- ☑ is attached.
- ☐ is not attached because the document is already in the U.S. application.

c. **English translations of the documents in a. and b. above are attached (if the documents are not in the English language). A statement that the English translation is accurate is attached for the document in b. above.**

d. **(1) An information disclosure statement listing the documents cited in the international work products (ISR, WO/ISA, WO/IPEA, IPER) of the corresponding PCT application.**

- ☐ is attached.
- ☑ has already been filed in the above-identified U.S. application on February 29, 2012

(2) Copies of all documents (except for U.S. patents or U.S. patent application publications)

- ☐ are attached.
- ☑ have already been filed in the above-identified U.S. application on February 29, 2012

This collection of information is required by 35 U.S.C. 119, 37 CFR 1.55, and 37 CFR 1.102(d). The information is required to obtain or retain a benefit by the public, which is to file (and by the USPTO to process) an application. Confidentiality is governed by 35 U.S.C. 122 and 37 CFR 1.11 and 1.14. This collection is estimated to take 2 hours to complete, including gathering, preparing, and submitting the completed application form to the USPTO. Time will vary depending upon the individual case. Any comments on the amount of time you require to complete this form and/or suggestions for reducing this burden should be sent to the Chief Information Officer, U.S. Patent and Trademark Office, U.S. Department of Commerce, P.O. Box 1450, Alexandria, VA 22313-1450. DO NOT SEND FEES OR COMPLETED FORMS TO THIS ADDRESS.

Under the Paperwork Reduction Act of 1995, no persons are required to respond to a collection of information unless it displays a valid OMB control number.

REQUEST FOR PARTICIPATION IN THE PCT-PPH PILOT PROGRAM BETWEEN THE KIPO AND THE USPTO

(continued)

Application No.:	13/173,337	First Named Inventor:	Liviu Movileanu

II. Claims Correspondence Table:

Claims in US Application	Patentable Claims in the corresponding PCT application	Explanation regarding the correspondence
1-14	1-14	Claims have Novelty, Inventive Step and Industrial Applicability

III. All the claims in the US application sufficiently correspond to the patentable claims in the corresponding PCT application.

Signature /David L. Nocilly/	Date 03/01/2012
Name (Print/Typed) David L. Nocilly	Registration Number 48,259

Privacy Act Statement

The **Privacy Act of 1974 (P.L. 93-579)** requires that you be given certain information in connection with your submission of the attached form related to a patent application or patent. Accordingly, pursuant to the requirements of the Act, please be advised that: (1) the general authority for the collection of this information is 35 U.S.C. 2(b)(2); (2) furnishing of the information solicited is voluntary; and (3) the principal purpose for which the information is used by the U.S. Patent and Trademark Office is to process and/or examine your submission related to a patent application or patent. If you do not furnish the requested information, the U.S. Patent and Trademark Office may not be able to process and/or examine your submission, which may result in termination of proceedings or abandonment of the application or expiration of the patent.

The information provided by you in this form will be subject to the following routine uses:

1. The information on this form will be treated confidentially to the extent allowed under the Freedom of Information Act (5 U.S.C. 552) and the Privacy Act (5 U.S.C 552a). Records from this system of records may be disclosed to the Department of Justice to determine whether disclosure of these records is required by the Freedom of Information Act.
2. A record from this system of records may be disclosed, as a routine use, in the course of presenting evidence to a court, magistrate, or administrative tribunal, including disclosures to opposing counsel in the course of settlement negotiations.
3. A record in this system of records may be disclosed, as a routine use, to a Member of Congress submitting a request involving an individual, to whom the record pertains, when the individual has requested assistance from the Member with respect to the subject matter of the record.
4. A record in this system of records may be disclosed, as a routine use, to a contractor of the Agency having need for the information in order to perform a contract. Recipients of information shall be required to comply with the requirements of the Privacy Act of 1974, as amended, pursuant to 5 U.S.C. 552a(m).
5. A record related to an International Application filed under the Patent Cooperation Treaty in this system of records may be disclosed, as a routine use, to the International Bureau of the World Intellectual Property Organization, pursuant to the Patent Cooperation Treaty.
6. A record in this system of records may be disclosed, as a routine use, to another federal agency for purposes of National Security review (35 U.S.C. 181) and for review pursuant to the Atomic Energy Act (42 U.S.C. 218(c)).
7. A record from this system of records may be disclosed, as a routine use, to the Administrator, General Services, or his/her designee, during an inspection of records conducted by GSA as part of that agency's responsibility to recommend improvements in records management practices and programs, under authority of 44 U.S.C. 2904 and 2906. Such disclosure shall be made in accordance with the GSA regulations governing inspection of records for this purpose, and any other relevant (*i.e.*, GSA or Commerce) directive. Such disclosure shall not be used to make determinations about individuals.
8. A record from this system of records may be disclosed, as a routine use, to the public after either publication of the application pursuant to 35 U.S.C. 122(b) or issuance of a patent pursuant to 35 U.S.C. 151. Further, a record may be disclosed, subject to the limitations of 37 CFR 1.14, as a routine use, to the public if the record was filed in an application which became abandoned or in which the proceedings were terminated and which application is referenced by either a published application, an application open to public inspection or an issued patent.
9. A record from this system of records may be disclosed, as a routine use, to a Federal, State, or local law enforcement agency, if the USPTO becomes aware of a violation or potential violation of law or regulation.

CLAIMS

What is claimed is:

1. An isolated nucleic acid encoding an engineered ferric hydroxamate uptake component A ("FhuA") protein, wherein said engineered FhuA protein is missing the cork domain and at least four of the eleven loop domains found in the wild-type FhuA protein.

2. The isolated nucleic acid of claim 1, wherein said missing cork domain comprises the first 160 amino acid residues of the wild-type FhuA protein.

3. The isolated nucleic acid of claim 1, wherein said missing loop domains are replaced by a short amino acid sequence.

4. The isolated nucleic acid of claim 3, wherein said short amino acid sequence is Asparagine, Serine, Glutamate, Glycine, and Serine ("NSEGS").

5. The isolated nucleic acid of claim 1, wherein at least one of said missing loop domains are selected from the group consisting of loop 3, loop 4, loop 5, and loop 11.

6. A method for obtaining an engineered ferric hydroxamate uptake component A ("FhuA") protein, said method comprising the steps of:

expressing a modified gene sequence in a host cell whereby said engineered FhuA protein is produced, wherein said modified gene sequence encodes an engineered FhuA protein that is missing the cork domain and at least four of the eleven loop domains found in the wild-type FhuA protein.

7. The method of claim 6, wherein said missing cork domain comprises the first 160 amino acid residues of the wild-type FhuA protein.

8. The method of claim 6, wherein said missing loop domains comprise at least loop 3, loop 4, loop 5, and loop 11.

9. The method of claim 6, further comprising the step of purifying the produced engineered FhuA protein.

10. A polypeptide comprising an engineered ferric hydroxamate uptake component A ("FhuA"), wherein said engineered FhuA is missing the cork domain and at least four of the eleven loop domains found in the wild-type FhuA protein.

11. The polypeptide of claim 10, wherein said missing cork domain comprises the first 160 amino acid residues of the wild-type FhuA protein.

12. The polypeptide of claim 10, wherein at least one of said missing loop domains are selected from the group consisting of loop 3, loop 4, loop 5, and loop 11.

PATENT COOPERATION TREATY

PCT

INTERNATIONAL SEARCH REPORT

(PCT Article 18 and Rules 43 and 44)

Applicant's or agent's file reference 156P222B	**FOR FURTHER ACTION**	see Form PCT/ISA/220 as well as, where applicable, item 5 below.
International application No. **PCT/US2011/042532**	International filing date *(day/month/year)* **30 JUNE 2011 (30.06.2011)**	(Earliest) Priority Date *(day/month/year)* 30 JUNE 2010 (30.06.2010)
Applicant **SYRACUSE UNIVERSITY et al**		

This International search report has been prepared by this International Searching Authority and is transmitted to the applicant according to Article 18. A copy is being transmitted to the International Bureau.

This international search report consists of a total of **4** sheets.

☐ It is also accompanied by a copy of each prior art document cited in this report.

1. **Basis of the report**
   a. With regard to the **language**, the international search was carried out on the basis of:
      ☒ the international application in the language in which it was filed
      ☐ a translation of the international application into _____, which is the language of a translation furnished for the purposes of international search (Rules 12.3(a) and 23.1(b))
   b. ☐ This international search report has been established taking into account the **rectification of an obvious mistake** authorized by or notified to this Authority under Rule 91 (Rule 43.6*bis*(a)).
   c. ☒ With regard to any **nucleotide and/or amino acid sequence** disclosed in the international application, see Box No. I.
2. ☐ **Certain claims were found unsearchable** (See Box No. II)
3. ☐ **Unity of invention is lacking** (See Box No. III)
4. With regard to the **title,**
   ☒ the text is approved as submitted by the applicant.
   ☐ the text has been established by this Authority to read as follows:
5. With regard to the **abstract,**
   ☒ the text is approved as submitted by the applicant.
   ☐ the text has been established, according to Rule 38.2, by this Authority as it appears in Box No. IV. The applicant may, within one month from the date of mailing of this international search report, submit comments to this Authority.
6. With regard to the drawings,
   a. the figure of the **drawings** to be published with the abstract is Figure No. **1**
      ☒ as suggested by the applicant.
      ☐ as selected by this Authority, because the applicant failed to suggest a figure.
      ☐ as selected by this Authority, because this figure better characterizes the invention.
   b. ☐ none of the figure is to be published with the abstract.

INTERNATIONAL SEARCH REPORT

International application No.
PCT/US2011/042532

Box No. I Nucleotide and/or amino acid sequence(s) (Continuation of item1.b of the first sheet)

1. With regard to any nucleotide and/or amino acid sequence disclosed in the international application, the international search was carried out on the basis of :

   a. a sequence listing filed or furnished
      - ☐ on paper
      - ☒ in electronic form

   b. time of filing or furnishing
      - ☐ contained in the international application as filed
      - ☒ filed together with the international application in electronic form
      - ☐ furnished subsequently to this Authority for the purposes of search

2. ☐ In addition, in the case that more than one version or copy of a sequence listing has been filed or furnished, the required statements that the information in the subsequent or additional copies is identical to that in the application as filed or does not go beyond the application as filed, as appropriate, were furnished.

3. Additional comments:

INTERNATIONAL SEARCH REPORT

International application No.
PCT/US2011/042532

A. CLASSIFICATION OF SUBJECT MATTER

C12N 15/31(2006.01)i, C07K 14/245(2006.01)i, G01N 33/68(2006.01)i

According to International Patent Classification (IPC) or to both national classification and IPC

B. FIELDS SEARCHED

Minimum documentation searched (classification system followed by classification symbols)
C12N 15/31; G01N 33/554; C12N 1/21; C07K 14/195

Documentation searched other than minimum documentation to the extent that such documents are included in the fields searched
Korean utility models and applications for utility models
Japanese utility models and applications for utility models

Electronic data base consulted during the international search (name of data base and, where practicable, search terms used)
eKOMPASS(KIPO internal) & Keywords: FhuA, inactiveation, delation, missing, cork domain

C. DOCUMENTS CONSIDERED TO BE RELEVANT

Category*	Citation of document, with indication, where appropriate, of the relevant passages	Relevant to claim No.
PX	Noor Muhammad et al., `Engineering of the E. coli Outer Membrane Protein FhuA to overcome the Hydrophobic Mismatch in Thick Polymeric Membranes`, Journal of Nanobiotechnology, Vol. 9(8), pp. 1-9 (17 March 2011, online publication http://www.jnanobiotechnology.com/content/9/1/8) See Abstract, Whole-document	1-14
A	V. Braun et al., 'Inactivation of FhuA at the Cell Surface of Escherichia coli K-12 by a Phage T5 Lipoprotein at the Periplasmic Face of the Outer Membrane', Journal of Bacteriology, Vol. 176(15), pp. 4710-4717 (August 1994) See Abstract, Table 2, Fig. 1	1-14
A	WO 2007-119891 A1 (AJINOMOTO CO., INC. et al.) 25 October 2007 See Abstract, Pages 5, 18-19, Fig. 3, Claim 1	1-14
A	US 2006-0051362 A1 (MARIO JACQUES et al.) 09 March 2006 See Abstract, Seq ID Nos. 1, 4, Fig. 4, 5, Claims 1-27	1-14
A	RU 2333955 C2 (RYBAK KONSTANTIN VJACHESLAVOVICH et al.) 20 September 2008 See Abstract	1-14

☐ Further documents are listed in the continuation of Box C. ☒ See patent family annex.

* Special categories of cited documents:
"A" document defining the general state of the art which is not considered to be of particular relevance
"E" earlier application or patent but published on or after the international filing date
"L" document which may throw doubts on priority claim(s) or which is cited to establish the publication date of citation or other special reason (as specified)
"O" document referring to an oral disclosure, use, exhibition or other means
"P" document published prior to the international filing date but later than the priority date claimed
"T" later document published after the international filing date or priority date and not in conflict with the application but cited to understand the principle or theory underlying the invention
"X" document of particular relevance; the claimed invention cannot be considered novel or cannot be considered to involve an inventive step when the document is taken alone
"Y" document of particular relevance; the claimed invention cannot be considered to involve an inventive step when the document is combined with one or more other such documents,such combination being obvious to a person skilled in the art
"&" document member of the same patent family

Date of the actual completion of the international search	Date of mailing of the international search report
31 JANUARY 2012 (31.01.2012)	**09 FEBRUARY 2012 (09.02.2012)**
Name and mailing address of the ISA/KR Korean Intellectual Property Office Government Complex-Daejeon, 189 Cheongsa-ro, Seo-gu, Daejeon 302-701, Republic of Korea Facsimile No. 82-42-472-7140	Authorized officer PARK, Yeong-Gwan Telephone No. 82-42-481-8407

INTERNATIONAL SEARCH REPORT

Information on patent family members

International application No.

PCT/US2011/042532

Patent document cited in search report	Publication date	Patent family member(s)	Publication date
WO 2007-119891 A1	25.10.2007	WO 2007-119891 A9	14.08.2008
US 2006-0051362 A1	09.03.2006	AU 2002-351592 A1	30.06.2003
		AU 2002-351592 A8	30.06.2003
		CA 2510654 A1	26.06.2003
		EP 1458751 A2	22.09.2004
		WO 03-051913 A2	26.06.2003
RU 2333955 C2	20.09.2008	None	

PATENT COOPERATION TREATY

From the
INTERNATIONAL SEARCHING AUTHORITY

To:
NOCILLY, DAVID L.

BOND, SCHOENECK & KING, PLLC 0NE LINCOLN CENTER SYRACUSE, NEW YORK 13202 USA.

PCT

WRITTEN OPINION OF THE INTERNATIONAL SEARCHING AUTHORITY

(PCT Rule 43bis.1)

Date of mailing *(day/month/year)* **09 FEBRUARY 2012 (09.02.2012)**

Applicant's or agent's file reference
156P222B

FOR FURTHER ACTION
See paragraph 2 below

International application No.	International filing date *(day/month/year)*	Priority date *(day/month/year)*
PCT/US2011/042532	**30 JUNE 2011 (30.06.2011)**	30 JUNE 2010 (30.06.2010)

International Patent Classification (IPC) or both national classification and IPC

C12N 15/31(2006.01)i, C07K 14/245(2006.01)i, G01N 33/68(2006.01)i

Applicant

SYRACUSE UNIVERSITY et al

1. This opinion contains indications relating to the following items:

- [x] Box No. I Basis of the opinion
- [ ] Box No. II Priority
- [ ] Box No. III Non-establishment of opinion with regard to novelty, inventive step and industrial applicability
- [ ] Box No. IV Lack of unity of invention
- [x] Box No. V Reasoned statement under Rule 43bis.1(a)(i) with regard to novelty, inventive step or industrial applicability; citations and explanations supporting such statement
- [ ] Box No. VI Certain documents cited
- [ ] Box No. VII Certain defects in the international application
- [ ] Box No. VIII Certain observations on the international application

2. **FURTHER ACTION**

If a demand for international preliminary examination is made, this opinion will be considered to be a written opinion of the International Preliminary Examining Authority ("IPEA") except that this does not apply where the applicant chooses an Authority other than this one to be the IPEA and the chosen IPEA has notified the International Bureau under Rule 66.1bis(b) that written opinions of this International Searching Authority will not be so considered.

If this opinion is, as provided above, considered to be a written opinion of the IPEA, the applicant is invited to submit to the IPEA a written reply together, where appropriate, with amendments, before the expiration of 3 months from the date of mailing of Form PCT/ISA/220 or before the expiration of 22 months from the priority date, whichever expires later.
For further options, see Form PCT/ISA/220.

Name and mailing address of the ISA/KR	Date of completion of this opinion	Authorized officer
Korean Intellectual Property Office Government Complex-Daejeon, 189 Cheongsa-ro, Seo-gu, Daejeon 302-701, Republic of Korea Facsimile No. 82-42-472-7140	31 JANUARY 2012 (31.01.2012)	PARK, Yeong-Gwan Telephone No.82-42-481-8407

WRITTEN OPINION OF THE INTERNATIONAL SEARCHING AUTHORITY

International application No.

PCT/US2011/042532

Box No. I Basis of this opinion

1. With regard to the **language**, this opinion has been established on the basis of:

   ☒ the international application in the language in which it was filed

   ☐ a translation of the international application into _____, which is the language of a translation furnished for the purposes of international search (Rules 12.3(a) and 23.1(b))

2. ☐ This opinion has been established taking into account the **rectification of an obvious mistake** authorized by or notified to this Authority under Rule 91 (Rule 43*bis*.1(a))

3. With regard to any **nucleotide and/or amino acid sequence** disclosed in the international application, this opinion has been established on the basis of:

   a. a sequence listing filed or furnished
      ☐ on paper
      ☒ in electronic form

   b. time of filing or furnishing
      ☐ contained in the international application as filed.
      ☒ filed together with the international application in electronic form.
      ☐ furnished subsequently to this Authority for the purposes of search.

4. ☐ In addition, in the case that more than one version or copy of a sequence listing has been filed or furnished, the required statements that the information in the subsequent or additioanl copies is identical to that in the application as filed or does not go beyond the application as filed, as appropriate, were furnished.

5. Additional comments:

WRITTEN OPINION OF THE INTERNATIONAL SEARCHING AUTHORITY

International application No.
PCT/US2011/042532

Box No. V Reasoned statement under Rule 43bis.1(a)(i) with regard to novelty, inventive step or industrial applicability; citations and explanations supporting such statement

1. Statement

Novelty (N)	Claims	1-14	YES
	Claims	NONE	NO
Inventive step (IS)	Claims	1-14	YES
	Claims	NONE	NO
Industrial applicability (IA)	Claims	1-14	YES
	Claims	NONE	NO

2. Citations and explanations :

Reference is made to the following documents:

D1: V. Braun et al., 'Inactivation of FhuA at the Cell Surface of Escherichia coli K-12 by a Phage T5 Lipoprotein at the Periplasmic Face of the Outer Membrane', Journal of Bacteriology, Vol. 176(15), pp. 4710-4717 (August 1994)
D2: WO 2007-119891 A1 (Ajinomoto Co., Inc.) 25 October 2007

2.1 Novelty and Inventive Step
The subject matter of claims 1, 6 and 10 is the same as those of D1 or D2 in that the present invention describes FhuA inactivation or attenuation by genetic geneering. Though D1 and D2 describe the same above-configurations, they do not suggest that engineered-FhuA protein misses a cork domain and at least four of the eleven loop domains found in the wild-type FhuA protein. Specifically, the description of the present invention shows that the engineered-FhuA protein has an industrial benefit in biological biosensors. Thus, the subject matter of claims 1, 6 and 10 meets the requirement of PCT Article 33(2) and (3) in terms of novelty and inventive step.

The subject matter of claims 2-5, 7-9 and 11-14 which are directly or indirectly referring to claims 1, 6 and 10 also meets the requirements of PCT Article 33(2) and (3).

Therefore, the subject matter of claims 1-14 meets the requirements of PCT Article 33(2) and (3).

2.2 Industrial Applicability
The subject matter of claims 1-14 is considered to be industrially applicable under PCT Article 33(4).

IN THE UNITED STATES PATENT AND TRADEMARK OFFICE

In re Application of:	
Andrew D. Henroid et al.	Examiner: TBD
Application No.: TBD	Art Unit: TBD
Filed: TBD	
For: METHOD AND SYSTEM FOR DETERMINING AN ENERGY-EFFICIENT OPERATING POINT OF A PLATFORM	

Mail Stop Amendment
Commissioner for Patents
P.O. Box 1450
Alexandria, VA 22313-1450

STATEMENT OF SPECIAL STATUS

Dear Sir/Mdm:

Applicants respectfully submit that the above-identified application is eligible for the Green Technology Pilot Program in that the described subject matter materially contributes to the more efficient utilization and conservation of energy resources.

In this regard, the application describes a method and system for determining an energy-efficient operating point of a platform. The platform has logic to dynamically manage setting(s) of the processing cores and/or platform components in the platform to achieve maximum system energy efficiency by using the characteristics of the workload and/or platform.

It is respectfully submitted that the above petition should be granted and the above application should be accorded special status under the Green Technology Pilot Program.

Respectfully submitted,

BLAKELY, SOKOLOFF, TAYLOR & ZAFMAN LLP

Date: June 30, 2011

/Gregory D. Caldwell/
Gregory D. Caldwell
Reg. No. 39,926

1279 Oakmead Parkway
Sunnyvale, CA 94085-4040
(503) 439-8778

Doc Code: PET.GREEN
Document Description: Petition for Green Tech Pilot

PTO/SB/420 (03-11)

PETITION TO MAKE SPECIAL UNDER THE GREEN TECHNOLOGY PILOT PROGRAM

Attorney Docket Number: 42P37302	Application Number (if known): TBD	Filing date: Even date herewith

First Named Inventor: Andrew Henroid

Title: METHOD AND SYSTEM FOR DETERMINING AN ENERGY-EFFICIENT OPERATING POINT OF A PLATFORM

APPLICANT HEREBY REQUESTS TO PARTICIPATE IN THE GREEN TECHNOLOGY PILOT PROGRAM FOR THE ABOVE-IDENTIFIED APPLICATION. See Instruction Sheet on page 2.

This petition must be timely filed electronically using the USPTO electronic filing system, EFS-Web.

1. By filing this petition:

   Applicant is requesting early publication: Applicant hereby requests early publication under 37 CFR 1.219 and the publication fee set forth in 37 CFR 1.18(d) accompanies this request.

2. By filing this petition: applicant is agreeing to make an election without traverse in a telephonic interview and elect an invention that meets the eligibility requirements for the Green Technology Pilot Program, if the Office determines that the claims are not obviously directed to a single invention. See Instruction Sheet.

3. This request is accompanied by statements of special status for the eligibility requirement.

4. The application contains no more than three (3) independent claims and twenty (20) total claims.

5. The application does not contain any multiple dependent claims.

6. Other attachments: _____

Signature /Gregory D. Caldwell/	Date 6/30/11
Name (Print/Typed) Gregory D. Caldwell	Registration Number 39926

***Note**: Signatures of all the inventors or assignees of record of the entire interest or their representative(s) are required in accordance with 37 CFR 1.33 and 11.18. Please see 37 CFR 1.4(d) for the form of the signature. If necessary, submit multiple forms for more than one signature, see below*.*

☐ *Total of _____ forms are submitted.

If you need assistance in completing the form, call 1-800-PTO-9199 and select option 2.

UNITED STATES PATENT AND TRADEMARK OFFICE

UNITED STATES DEPARTMENT OF COMMERCE
United States Patent and Trademark Office
Address: COMMISSIONER FOR PATENTS
P.O. Box 1450
Alexandria, Virginia 22313-1450
www.uspto.gov

APPLICATION NO.	FILING DATE	FIRST NAMED INVENTOR	ATTORNEY DOCKET NO.	CONFIRMATION NO.
13/173,497	06/30/2011	Andrew D. Henroid	42P37302	9232

45209 7590 08/17/2011
MISSION/BSTZ
BLAKELY SOKOLOFF TAYLOR & ZAFMAN LLP
1279 OAKMEAD PARKWAY
SUNNYVALE, CA 94085-4040

EXAMINER
PATEL, NITIN C

ART UNIT	PAPER NUMBER
2116	

MAIL DATE	DELIVERY MODE
08/17/2011	PAPER

Please find below and/or attached an Office communication concerning this application or proceeding.

The time period for reply, if any, is set in the attached communication.

UNITED STATES PATENT AND TRADEMARK OFFICE

Commissioner for Patents
United States Patent and Trademark Office
P.O. Box 1450
Alexandria, VA 22313-1450
www.uspto.gov

MISSION/BSTZ
BLAKELY SOKOLOFF TAYLOR & ZAFMAN LLP
1279 OAKMEAD PARKWAY
SUNNYVALE CA 94085-4040

In re Application of :
HENROID, Andrew et al. :
Application No. 13/173,497 :
Filed: June 30, 2011 :
For: **METHOD AND SYSTEM FOR DETERMINING AN ENERGY-EFFICIENT OPERATING POINT OF A PLATFORM** :

DECISION ON PETITION TO MAKE SPECIAL UNDER THE GREEN TECHNOLOGY PILOT PROGRAM

This is a decision on the petition under 37 CFR 1.102, filed June 30, 2011, to make the above-identified application special under the pilot program for applications pertaining to Green Technologies as set forth in 74 Federal Register Notice 64666 (December 8, 2009) and amended by 75 Federal Register Notice 28554 (May 21, 2010) and 75 Federal Register Notice 69049 (November 10, 2010).

The petition is **GRANTED**.

A grantable petition to make an application special under 37 CFR 1.102 and the pilot program as set forth in 74 FR 64666 must be directed to a nonprovisional application filed under 35 USC 111(a) or be a national stage entry under 35 USC 371, exclusive of any reissue applications.

In order to qualify for special status, the following requirements must be met. 1) The application must have no more than 3 independent claims and no more than 20 total claims. 2) The application must not contain any multiple dependent claims. 3) The petition must state the basis for seeking special status, i.e., the claimed invention either: A) materially enhances the quality of the environment or B) materially contributes to: i) the discovery or development of renewable energy resources, ii) the more efficient utilization and conservation of energy resources, or iii) greenhouse gas emission reduction. 4) If the disclosure is not clear on its face that the claimed invention materially contributes under category (A) or (B), the petition must be accompanied by a statement by the applicant, assignee, or an attorney/agent registered to practice before the Office explaining how the materiality standard is met. 5) A statement that applicant will agree to make an election without traverse in a telephonic interview if a restriction requirement is made by the examiner. 6) The petition to make special must be filed electronically. 7) The petition

must be filed at least one day prior to the date that a first Office Action appears in the Patent Application Information Retrieval (PAIR) system. 8) The petition must be accompanied by a request for early publication in compliance with 37 CFR 1.219 and include the publication fee as set forth in 37 CFR 1.18(d).

The requirement for a fee for consideration of the petition to make special for applications pertaining to Green Technologies has been waived.

The instant petition complies with items 1 – 8 above. Accordingly, the above-identified application has been accorded "special" status.

The application is being forwarded to the Technology Center Art Unit 2115 for action on the merits commensurate with this decision.

Telephone inquires concerning this decision should be directed to Eddie C. Lee at 571-272-1732.

/Eddie C. Lee/

Eddie C. Lee
Quality Assurance Specialist
Technology Center 2100

Doc Code: PET.GREEN
Document Description: Petition for Green Tech Pilot

PTO/SB/420 (03-11)

PETITION TO MAKE SPECIAL UNDER THE GREEN TECHNOLOGY PILOT PROGRAM

Attorney Docket Number: 247478	Application Number (if known): 13/173,633	Filing date: June 30, 2011

First Named Inventor: James William Bray

Title: METHOD AND APPARATUS FOR A SUPERCONDUCTING DIRECT CURRENT GENERATOR DRIVEN BY A WIND TURBINE

APPLICANT HEREBY REQUESTS TO PARTICIPATE IN THE GREEN TECHNOLOGY PILOT PROGRAM FOR THE ABOVE-IDENTIFIED APPLICATION. See Instruction Sheet on page 2.

This petition must be timely filed electronically using the USPTO electronic filing system, EFS-Web.

1. By filing this petition:

   Applicant is requesting early publication: Applicant hereby requests early publication under 37 CFR 1.219 and the publication fee set forth in 37 CFR 1.18(d) accompanies this request.

2. By filing this petition: applicant is agreeing to make an election without traverse in a telephonic interview and elect an invention that meets the eligibility requirements for the Green Technology Pilot Program, if the Office determines that the claims are not obviously directed to a single invention. See Instruction Sheet.

3. This request is accompanied by statements of special status for the eligibility requirement.

4. The application contains no more than three (3) independent claims and twenty (20) total claims.

5. The application does not contain any multiple dependent claims.

6. Other attachments: Statement Concerning the Basis for the Special Status

Signature /Allison W. Mages/	Date November 4, 2011
Name (Print/Typed) Allison W. Mages	Registration Number 57,275

Note: Signatures of all the inventors or assignees of record of the entire interest or their representative(s) are required in accordance with 37 CFR 1.33 and 11.18. Please see 37 CFR 1.4(d) for the form of the signature. If necessary, submit multiple forms for more than one signature, see below.*

☐ *Total of _____ forms are submitted.

If you need assistance in completing the form, call 1-800-PTO-9199 and select option 2.

IN THE UNITED STATES PATENT AND TRADEMARK OFFICE

First Named Inventor: James William Bray	)
Confirmation No.: 9458	)
	)
Serial No.: 13/173,633	)
	)
Filing Date: 06-30-2011	)
	)
Atty Docket No.: 247478	)

VIA EFS
Commissioner for Patents
P.O. Box 1450
Alexandria, VA 22313-1450

Statement Concerning the Basis for the Special Status

SIR:

This invention relates to electrical generators and, particularly, relates to wind turbines and superconducting direct current (DC) generators. (See [0001]).

There is a long felt need for direct drive generators for wind turbines capable of generating higher electrical power, e.g., 10 MW. In addition, there is a need for a DC generator which allows the first stage of the converter to be either eliminated or simplified, thereby providing reductions in cost, size and weight, which allow for economical shipping and installation on a wind turbine tower and concomitant reliability increase. (See [0005]).

Applicant respectfully submits that Special Status is sought on the basis that the present invention materially contributes to the discovery or development of renewable energy resources.

The undersigned representative may be contacted at the number below to facilitate the resolution of any matters. Please charge any fees that are incurred in connection with this Statement to deposit account no. 09-0470.

Respectfully submitted,

General Electric Company

By : /Allison W. Mages/
Allison W. Mages
Reg. No. 57,275

Dated: November 4, 2011

GE Global Patent Operation
2 Corporate Drive, Suite 648
Shelton, CT 06484
203-944-6730

UNITED STATES PATENT AND TRADEMARK OFFICE

UNITED STATES DEPARTMENT OF COMMERCE
United States Patent and Trademark Office
Address: COMMISSIONER FOR PATENTS
P.O. Box 1450
Alexandria, Virginia 22313-1450
www.uspto.gov

APPLICATION NO.	FILING DATE	FIRST NAMED INVENTOR	ATTORNEY DOCKET NO.	CONFIRMATION NO.
13/173,633	06/30/2011	James William Bray	247478-1	9458

6147 7590 11/10/2011
GENERAL ELECTRIC COMPANY
GLOBAL RESEARCH
ONE RESEARCH CIRCLE
BLDG. K1-3A59
NISKAYUNA, NY 12309

EXAMINER
PATEL, TULSIDAS C

ART UNIT	PAPER NUMBER
2839	

NOTIFICATION DATE	DELIVERY MODE
11/10/2011	ELECTRONIC

Please find below and/or attached an Office communication concerning this application or proceeding.

The time period for reply, if any, is set in the attached communication.

Notice of the Office communication was sent electronically on above-indicated "Notification Date" to the following e-mail address(es):

ldocket@crd.ge.com
wahld@ge.com
haeckl@ge.com

UNITED STATES PATENT AND TRADEMARK OFFICE

Commissioner for Patents
United States Patent and Trademark Office
P.O. Box 1450
Alexandria, VA 22313-1450
www.uspto.gov

GENERAL ELECTRIC COMPANY
GLOBAL RESEARCH
ONE RESEARCH CIRCLE
BLDG. K1-3A59
NISKAYUNA NY 12309

In re Application of	:	
BRAY, James William	:	DECISION ON PETITION
Application No. 13/173,633	:	TO MAKE SPECIAL UNDER
Filed: June 30, 2011	:	THE GREEN TECHNOLOGY
Attorney Docket No. 247478-1	:	PILOT PROGRAM

This is a decision on the petition under 37 CFR 1.102, filed on November 7, 2011, to make the above-identified application special under the pilot program for applications pertaining to Green Technologies as set forth 74 Federal Register Notice 64666 (December 8, 2009) and amended by 75 Federal Register Notice 28554 (May 21, 2010) and 75 Federal Register Notice 69049 (November 10, 2010).

The petition is **GRANTED**.

A grantable petition to make an application special under 37 CFR 1.102 and the pilot program as set forth in 74 FR 64666 must be directed to a nonprovisional application filed under 35 USC 111(a) or be a national stage entry under 35 USC 371, exclusive of any reissue applications.

In order to qualify for special status, the following requirements must be met. 1) The application must have no more than 3 independent claims and no more than 20 total claims. 2) The application must not contain any multiple dependent claims. 3) The petition must state the basis for seeking special status, i.e., the claimed invention either: A) materially enhances the quality of the environment or B) materially contributes to: i) the discovery or development of renewable energy resources, ii) the more efficient utilization and conservation of energy resources, or iii) greenhouse gas emission reduction. 4) If the disclosure is not clear on its face that the claimed invention materially contributes under category (A) or (B), the petition must be accompanied by a statement by the applicant, assignee, or an attorney/agent registered to practice before the Office explaining how the materiality standard is met. 5) A statement that applicant will agree to make an election without traverse in a telephonic interview if a restriction requirement is made by the examiner. 6) The petition to make special must be filed electronically. 7) The petition must be filed at least one day prior to the date that a first Office Action appears in the Patent Application Information Retrieval (PAIR) system. 8) The petition must be accompanied by a request for early publication in compliance with 37 CFR 1.219 and include the publication fee as set forth in 37 CFR 1.18(d).

The requirement for a fee for consideration of the petition to make special for applications pertaining to Green Technologies has been waived.

The instant petition complies with items 1 – 8 above. Accordingly, the above-identified application has been accorded "special" status.

Telephone inquires concerning this decision should be directed to Colleen Dunn at 571-272-1170.

The application is being forwarded to the appropriate Technology Center Art Unit for action on the merits commensurate with this decision.

/Colleen Dunn/

Colleen Dunn
TQAS, TC 2800

Doc Code: PET.GREEN
Document Description: Petition for Green Tech Pilot

PTO/SB/420 (03-11)

PETITION TO MAKE SPECIAL UNDER THE GREEN TECHNOLOGY PILOT PROGRAM

Attorney Docket Number: PAT 2529B-2	Application Number (if known): 13/173,638	Filing date: June 30, 2011

First Named Inventor: Simon FAFARD et al.

Title: SOLAR CELL WITH EPITAXIALLY GROWN QUANTUM DOT MATERIAL

APPLICANT HEREBY REQUESTS TO PARTICIPATE IN THE GREEN TECHNOLOGY PILOT PROGRAM FOR THE ABOVE-IDENTIFIED APPLICATION. See Instruction Sheet on page 2.

This petition must be timely filed electronically using the USPTO electronic filing system, EFS-Web.

1. By filing this petition:

   Applicant is requesting early publication: Applicant hereby requests early publication under 37 CFR 1.219 and the publication fee set forth in 37 CFR 1.18(d) accompanies this request.

2. By filing this petition: applicant is agreeing to make an election without traverse in a telephonic interview and elect an invention that meets the eligibility requirements for the Green Technology Pilot Program, if the Office determines that the claims are not obviously directed to a single invention. See Instruction Sheet.

3. This request is accompanied by statements of special status for the eligibility requirement.

4. The application contains no more than three (3) independent claims and twenty (20) total claims.

5. The application does not contain any multiple dependent claims.

6. Other attachments: _____

Signature /Louis B. Allard/	Date July 14, 2011
Name (Print/Typed) Louis B. Allard	Registration Number 64014

Note: *Signatures of all the inventors or assignees of record of the entire interest or their representative(s) are required in accordance with 37 CFR 1.33 and 11.18. Please see 37 CFR 1.4(d) for the form of the signature. If necessary, submit multiple forms for more than one signature, see below*.*

☒ *Total of 1 forms are submitted.

If you need assistance in completing the form, call 1-800-PTO-9199 and select option 2.

Instruction Sheet for
Petition to Make Special Under the Green Technology Pilot Program

(Not to be Submitted to the USPTO)

The following is a summary of the requirements (for more information see the notices (i) "Pilot Program for Green Technologies Including Greenhouse Gas Reduction," (ii) "Elimination of Classification Requirement in the Green Technology Pilot Program," and (iii) "Expansion and Extension of the Green Technology Pilot Program," available on the USPTO web site at http://www.uspto.gov/patents/init_events/green_tech.jsp):

(1) The application must be a non-reissue, non-provisional utility application filed under 35 U.S.C. 111(a), or an international application that has entered the national stage in compliance with 35 U.S.C. 371, irrespective of the filing date of the application. Reexamination proceedings are excluded from this pilot program.

(2) The application must contain three or fewer independent claims and twenty or fewer total claims. The application must not contain any multiple dependent claims. For an application that contains more than three independent claims or twenty total claims, or multiple dependent claims, applicant must file a preliminary amendment in compliance with 37 CFR 1.121 to cancel the excess claims and/or the multiple dependent claims at the time the petition to make special is filed.

(3) The claims must be directed to a single invention that materially enhances the quality of the environment, or that materially contributes to: (1) the discovery or development of renewable energy resources; (2) the more efficient utilization and conservation of energy resources; or (3) green house gas emission reduction (see the eligibility requirements of sections II and III of the notice (i) cited above). The petition must include a statement that, if the USPTO determines that the claims are directed to multiple inventions (e.g., in a restriction requirement), applicant will agree to make an election without traverse in a telephonic interview, and elect an invention that meets the eligibility requirements in section II or III of the notice (i) cited above.

(4) The petition to make special must be timely filed electronically using the USPTO electronic filing system, EFS-Web, and selecting the document description of "Petition for Green Tech Pilot" on the EFS-Web screen. Applicant should use form PTO/SB/420, which is available as a Portable Document Format (PDF) fillable form in EFS-Web and on the USPTO Web site.

(5) The petition to make special must be filed at least one day prior to the date that a first Office action (which may be an Office action containing only a restriction requirement) appears in the Patent Application Information Retrieval (PAIR) system. Applicant may check the status of the application using PAIR.

(6) The petition to make special must be accompanied by a request for early publication in compliance with 37 CFR 1.219 and the publication fee set forth in 37 CFR 1.18(d).

Privacy Act Statement

The **Privacy Act of 1974 (P.L. 93-579)** requires that you be given certain information in connection with your submission of the attached form related to a patent application or patent. Accordingly, pursuant to the requirements of the Act, please be advised that: (1) the general authority for the collection of this information is 35 U.S.C. 2(b)(2); (2) furnishing of the information solicited is voluntary; and (3) the principal purpose for which the information is used by the U.S. Patent and Trademark Office is to process and/or examine your submission related to a patent application or patent. If you do not furnish the requested information, the U.S. Patent and Trademark Office may not be able to process and/or examine your submission, which may result in termination of proceedings or abandonment of the application or expiration of the patent.

The information provided by you in this form will be subject to the following routine uses:

1. The information on this form will be treated confidentially to the extent allowed under the Freedom of Information Act (5 U.S.C. 552) and the Privacy Act (5 U.S.C 552a). Records from this system of records may be disclosed to the Department of Justice to determine whether disclosure of these records is required by the Freedom of Information Act.
2. A record from this system of records may be disclosed, as a routine use, in the course of presenting evidence to a court, magistrate, or administrative tribunal, including disclosures to opposing counsel in the course of settlement negotiations.
3. A record in this system of records may be disclosed, as a routine use, to a Member of Congress submitting a request involving an individual, to whom the record pertains, when the individual has requested assistance from the Member with respect to the subject matter of the record.
4. A record in this system of records may be disclosed, as a routine use, to a contractor of the Agency having need for the information in order to perform a contract. Recipients of information shall be required to comply with the requirements of the Privacy Act of 1974, as amended, pursuant to 5 U.S.C. 552a(m).
5. A record related to an International Application filed under the Patent Cooperation Treaty in this system of records may be disclosed, as a routine use, to the International Bureau of the World Intellectual Property Organization, pursuant to the Patent Cooperation Treaty.
6. A record in this system of records may be disclosed, as a routine use, to another federal agency for purposes of National Security review (35 U.S.C. 181) and for review pursuant to the Atomic Energy Act (42 U.S.C. 218(c)).
7. A record from this system of records may be disclosed, as a routine use, to the Administrator, General Services, or his/her designee, during an inspection of records conducted by GSA as part of that agency's responsibility to recommend improvements in records management practices and programs, under authority of 44 U.S.C. 2904 and 2906. Such disclosure shall be made in accordance with the GSA regulations governing inspection of records for this purpose, and any other relevant (*i.e.*, GSA or Commerce) directive. Such disclosure shall not be used to make determinations about individuals.
8. A record from this system of records may be disclosed, as a routine use, to the public after either publication of the application pursuant to 35 U.S.C. 122(b) or issuance of a patent pursuant to 35 U.S.C. 151. Further, a record may be disclosed, subject to the limitations of 37 CFR 1.14, as a routine use, to the public if the record was filed in an application which became abandoned or in which the proceedings were terminated and which application is referenced by either a published application, an application open to public inspection or an issued patent.
9. A record from this system of records may be disclosed, as a routine use, to a Federal, State, or local law enforcement agency, if the USPTO becomes aware of a violation or potential violation of law or regulation.

UNITED STATES PATENT AND TRADEMARK OFFICE

UNITED STATES DEPARTMENT OF COMMERCE
United States Patent and Trademark Office
Address: COMMISSIONER FOR PATENTS
P.O. Box 1450
Alexandria, Virginia 22313-1450
www.uspto.gov

APPLICATION NO.	FILING DATE	FIRST NAMED INVENTOR	ATTORNEY DOCKET NO.	CONFIRMATION NO.
13/173,638	06/30/2011	Simon FAFARD	PAT 2529B-2	9469

26123 7590 08/26/2011
BORDEN LADNER GERVAIS LLP
Anne Kinsman
WORLD EXCHANGE PLAZA
100 QUEEN STREET SUITE 1100
OTTAWA, ON K1P 1J9
CANADA

EXAMINER

ART UNIT	PAPER NUMBER
1759	

NOTIFICATION DATE	DELIVERY MODE
08/26/2011	ELECTRONIC

Please find below and/or attached an Office communication concerning this application or proceeding.

The time period for reply, if any, is set in the attached communication.

Notice of the Office communication was sent electronically on above-indicated "Notification Date" to the following e-mail address(es):

ipinfo@blg.com

UNITED STATES PATENT AND TRADEMARK OFFICE

Commissioner for Patents
United States Patent and Trademark Office
P.O. Box 1450
Alexandria, VA 22313-1450
www.uspto.gov

8/26/11

BORDEN LADNER GERVAIS LLP
Anne Kinsman
WORLD EXCHANGE PLAZA
100 QUEEN STREET SUITE 1100
OTTAWA ON K1P 1J9 CA CANADA

In re Application of	:	
Simon Fafard et al.	:	DECISION ON PETITION
Application No. 13/173,638	:	TO MAKE SPECIAL UNDER
Filed: June 30, 2011	:	THE GREEN TECHNOLOGY
Attorney Docket No. PAT 2529B-2	:	PILOT PROGRAM

This is a decision on the petition under 37 CFR 1.102, filed July 14, 2011, to make the above-identified application special under the pilot program for applications pertaining to Green Technologies as set forth in 74 Federal Register Notice 64666 (December 8, 2009) and amended by 75 Federal Register Notice 28554 (May 21, 2010) and 75 Federal Register Notice 69049 (November 10, 2010).

The petition is **GRANTED**.

A grantable petition to make an application special under 37 CFR 1.102 and the pilot program as set forth in 74 FR 64666 must be directed to a nonprovisional application filed under 35 USC 111(a) or be a national stage entry under 35 USC 371, exclusive of any reissue applications.

In order to qualify for special status, the following requirements must be met. 1) The application must have no more than 3 independent claims and no more than 20 total claims. 2) The application must not contain any multiple dependent claims. 3) The petition must state the basis for seeking special status, i.e., the claimed invention either: A) materially enhances the quality of the environment or B) materially contributes to: i) the discovery or development of renewable energy resources, ii) the more efficient utilization and conservation of energy resources, or iii) greenhouse gas emission reduction. 4) If the disclosure is not clear on its face that the claimed invention materially contributes under category (A) or (B), the petition must be accompanied by a statement by the applicant, assignee, or an attorney/agent registered to practice before the Office explaining how the materiality standard is met. 5) A statement that applicant will agree to make an election without traverse in a telephonic interview if a restriction requirement is made by the examiner. 6) The petition to make special must be filed electronically. 7) The petition must be filed at least one day prior to the date that a first Office Action appears in the Patent Application Information Retrieval (PAIR) system. 8) The petition must be accompanied by a request for early publication in compliance with 37 CFR 1.219 and include the publication fee as set forth in 37 CFR 1.18(d).

The requirement for a fee for consideration of the petition to make special for applications pertaining to Green Technologies has been waived.

The instant petition complies with items 1 – 8 above. Accordingly, the above-identified application has been accorded "special" status.

Telephone inquires concerning this decision should be directed to Blaine Copenheaver at 571-272-1156.

The application is being forwarded to the examiner for action on the merits commensurate with this decision.

/Blaine Copenheaver/

Blaine Copenheaver
Quality Assurance Specialist
Technology Center 1700

UNITED STATES PATENT AND TRADEMARK OFFICE

Commissioner for Patents
United States Patent and Trademark Office
P.O. Box 1450
Alexandria, VA 22313-1450
www.uspto.gov

MARSHALL, GERSTEIN & BORUN LLP
233 SOUTH WACKER DRIVE
6300 WILLIS TOWER
CHICAGO IL 60606-6357

MAILED
FEB 15 2012
OFFICE OF PETITIONS

In re Application of	:	
Walter et al.	:	
Application No. 13/173,657	:	ON PETITION
Filed: 06/30/2011	:	
Attorney Docket Number: 27656/44227A	:	

This is in response to the PETITION TO ACCEPT COLOR DRAWINGS UNDER 37 CFR § 1.84(B)(2), filed in the United States Patent and Trademark Office (USPTO) on June 30, 2011, which is treated as a petition under 37 CFR 1.84(a)(2).

The petition is **DISMISSED**.

Any request for reconsideration of this decision must be submitted within **TWO (2) MONTHS** from the mail date of this decision. Extensions of time under 37 CFR 1.136(a) are permitted. The reconsideration request should include a cover letter entitled, "Renewed Petition under 37 CFR 1.84(a)(2)". No further petition fee is required for a renewed petition.

37 CFR 1.84(a)(2) states that the Office will accept color drawings only after granting a petition explaining why color drawings are necessary. The petition must include:

(i) The fee set forth in 1.17(h);

(ii) Three (3) sets of color drawings;[1]

(iii) An amendment to the specification to insert (unless the specification contains or has been previously amended to contain) the following language as the first paragraph of the brief description of the drawings:

[1] The requirement for three (3) sets of color drawings is not applicable to color drawings submitted via EFS-Web. Therefore, only one set of color drawings is necessary when filing via EFS-Web. See MPEP 502.05(VIII)(C).

> The patent or application file contains at least one drawing executed in color. Copies of this patent or patent application publication with color drawing(s) will be provided by the Office upon request and payment of the necessary fee.

In addition, MPEP 608.02 states that a petition to accept color drawings will only be granted where the Office "has determined that a color drawings or photograph is the only practical medium by which to disclose in a printed utility patent the subject matter to be patented."

Petitioners request acceptance of color drawings of Figures 3A-3B as reproduction as drawings in color is the only medium by which the subject matter can be presented.

Petitioner's argument has been considered, but is not persuasive. The Office has determined that color drawings or photographs are not the only practical medium by which to disclose in a printed utility patent the subject matter to be patented. As color drawings or photographs are not necessary for an understanding of the invention sought to be patented, the petition is dismissed.

Further correspondence with respect to this matter should be addressed as follows:

By mail: Mail Stop Petitions
Commissioner for Patents
PO Box 1450
Alexandria VA 22313-1450

By FAX: 571-273-8300
Attn: Office of Petitions

A reply may also be filed via EFS-Web.

The application is being forwarded to Group Art Unit 2872.

Telephone inquiries regarding this decision should be directed to the undersigned at (571)272-3231.

Douglas I. Wood
Senior Petitions Attorney
Office of Petitions

Doc Code: PET.GREEN
Document Description: Petition for Green Tech Pilot

PTO/SB/420 (03-11)

PETITION TO MAKE SPECIAL UNDER THE GREEN TECHNOLOGY PILOT PROGRAM

Attorney Docket Number: 248657-1	Application Number (if known): 13/173,703	Filing date: 06-30-2011

First Named Inventor: Kevin Wayne Kinzie

Title: SYSTEM AND METHODS FOR CONTROLLING THE AMPLITUDE MODULATION OF NOISE GENERATED BY WIND TURBINES

APPLICANT HEREBY REQUESTS TO PARTICIPATE IN THE GREEN TECHNOLOGY PILOT PROGRAM FOR THE ABOVE-IDENTIFIED APPLICATION. See Instruction Sheet on page 2.

This petition must be timely filed electronically using the USPTO electronic filing system, EFS-Web.

1. By filing this petition:

   Applicant is requesting early publication: Applicant hereby requests early publication under 37 CFR 1.219 and the publication fee set forth in 37 CFR 1.18(d) accompanies this request.

2. By filing this petition: applicant is agreeing to make an election without traverse in a telephonic interview and elect an invention that meets the eligibility requirements for the Green Technology Pilot Program, if the Office determines that the claims are not obviously directed to a single invention. See Instruction Sheet.

3. This request is accompanied by statements of special status for the eligibility requirement.

4. The application contains no more than three (3) independent claims and twenty (20) total claims.

5. The application does not contain any multiple dependent claims.

6. Other attachments: Statement Concerning the Basis for the Special Status

Signature /Allison W. Mages/	Date October 10, 2011
Name (Print/Typed) Allison W. Mages	Registration Number 57,275

Note: Signatures of all the inventors or assignees of record of the entire interest or their representative(s) are required in accordance with 37 CFR 1.33 and 11.18. Please see 37 CFR 1.4(d) for the form of the signature. If necessary, submit multiple forms for more than one signature, see below.*

☐ *Total of _____ forms are submitted.

If you need assistance in completing the form, call 1-800-PTO-9199 and select option 2.

IN THE UNITED STATES PATENT AND TRADEMARK OFFICE

First Named Inventor: Kevin Wayne Kinzie	)
Confirmation No.: 9598	)
	)
Serial No.: 13/173,703	)
	)
Filing Date: 06-30-2011	)
	)
Atty Docket No.: 248657-1	)

VIA EFS
Commissioner for Patents
P.O. Box 1450
Alexandria, VA 22313-1450

Statement Concerning the Basis for the Special Status

SIR:

The present application relates generally to wind turbines and, more particularly, to a system and methods for controlling the amplitude modulation of noise generated by wind turbines. (See [0001]).

Applicant respectfully submits that Special Status is sought on the basis that the present invention materially contributes to the discovery or development of renewable energy resources.

The undersigned representative may be contacted at the number below to facilitate the resolution of any matters. Please charge any fees that are incurred in connection with this Statement to deposit account no. 09-0470.

Respectfully submitted,

General Electric Company

By : /Allison W. Mages/
Allison W. Mages
Reg. No. 57,275

Dated: October 10, 2011

GE Global Patent Operation
2 Corporate Drive, Suite 648
Shelton, CT 06484
203-944-6730

UNITED STATES PATENT AND TRADEMARK OFFICE

UNITED STATES DEPARTMENT OF COMMERCE
United States Patent and Trademark Office
Address: COMMISSIONER FOR PATENTS
P.O. Box 1450
Alexandria, Virginia 22313-1450
www.uspto.gov

APPLICATION NO.	FILING DATE	FIRST NAMED INVENTOR	ATTORNEY DOCKET NO.	CONFIRMATION NO.
13/173,703	06/30/2011	Kevin Wayne Kinzie	248657-1/GEC-325A	9598

87853 7590 10/26/2011
Dority & Manning, PA and General Electric Company
Post Office Box 1449
Greenville, SC 29602

EXAMINER

ART UNIT	PAPER NUMBER
2839	

MAIL DATE	DELIVERY MODE
10/26/2011	PAPER

Please find below and/or attached an Office communication concerning this application or proceeding.

The time period for reply, if any, is set in the attached communication.

UNITED STATES PATENT AND TRADEMARK OFFICE

Commissioner for Patents
United States Patent and Trademark Office
P.O. Box 1450
Alexandria, VA 22313-1450
www.uspto.gov

Dority & Manning, PA and General Electric Company
Post Office Box 1449
Greenville SC 29602

In re Application of	:	
KINZIE et al	:	DECISION ON PETITION
Application No. 13/173,703	:	TO MAKE SPECIAL UNDER
Filed: June 30, 2011	:	THE GREEN TECHNOLOGY
Attorney Docket No. 248657-1/GEC-325A	:	PILOT PROGRAM

This is a decision on the petition under 37 CFR 1.102, filed on October 10, 2011, to make the above-identified application special under the pilot program for applications pertaining to Green Technologies as set forth 74 Federal Register Notice 64666 (December 8, 2009) and amended by 75 Federal Register Notice 28554 (May 21, 2010) and 75 Federal Register Notice 69049 (November 10, 2010).

The petition is **GRANTED**.

A grantable petition to make an application special under 37 CFR 1.102 and the pilot program as set forth in 74 FR 64666 must be directed to a nonprovisional application filed under 35 USC 111(a) or be a national stage entry under 35 USC 371, exclusive of any reissue applications.

In order to qualify for special status, the following requirements must be met. 1) The application must have no more than 3 independent claims and no more than 20 total claims. 2) The application must not contain any multiple dependent claims. 3) The petition must state the basis for seeking special status, i.e., the claimed invention either: A) materially enhances the quality of the environment or B) materially contributes to: i) the discovery or development of renewable energy resources, ii) the more efficient utilization and conservation of energy resources, or iii) greenhouse gas emission reduction. 4) If the disclosure is not clear on its face that the claimed invention materially contributes under category (A) or (B), the petition must be accompanied by a statement by the applicant, assignee, or an attorney/agent registered to practice before the Office explaining how the materiality standard is met. 5) A statement that applicant will agree to make an election without traverse in a telephonic interview if a restriction requirement is made by the examiner. 6) The petition to make special must be filed electronically. 7) The petition must be filed at least one day prior to the date that a first Office Action appears in the Patent Application Information Retrieval (PAIR) system. 8) The petition must be accompanied by a request for early publication in compliance with 37 CFR 1.219 and include the publication fee as set forth in 37 CFR 1.18(d).

The requirement for a fee for consideration of the petition to make special for applications pertaining to Green Technologies has been waived.

The instant petition complies with items 1 – 8 above. Accordingly, the above-identified application has been accorded "special" status.

Telephone inquiries concerning this decision should be directed to Lee W. Young at 571-272-4549.

The application is being forwarded to the Technology Center Art Unit 2839 for action on the merits commensurate with this decision.

Lee W. Young
Quality Assurance Specialist
Technology Center 2600

Doc Code: PET.GREEN
Document Description: Petition for Green Tech Pilot

PTO/SB/420 (03-11)

PETITION TO MAKE SPECIAL UNDER THE GREEN TECHNOLOGY PILOT PROGRAM

Attorney Docket Number: 248657-2	Application Number (if known): 13/173,771	Filing date: 06-30-2011

First Named Inventor: Kevin Wayne Kinzie

Title: SYSTEM AND METHODS FOR CONTROLLING THE AMPLITUDE MODULATION OF NOISE GENERATED BY WIND TURBINES

APPLICANT HEREBY REQUESTS TO PARTICIPATE IN THE GREEN TECHNOLOGY PILOT PROGRAM FOR THE ABOVE-IDENTIFIED APPLICATION. See Instruction Sheet on page 2.

This petition must be timely filed electronically using the USPTO electronic filing system, EFS-Web.

1. By filing this petition:

   Applicant is requesting early publication: Applicant hereby requests early publication under 37 CFR 1.219 and the publication fee set forth in 37 CFR 1.18(d) accompanies this request.

2. By filing this petition: applicant is agreeing to make an election without traverse in a telephonic interview and elect an invention that meets the eligibility requirements for the Green Technology Pilot Program, if the Office determines that the claims are not obviously directed to a single invention. See Instruction Sheet.

3. This request is accompanied by statements of special status for the eligibility requirement.

4. The application contains no more than three (3) independent claims and twenty (20) total claims.

5. The application does not contain any multiple dependent claims.

6. Other attachments: Statement Concerning the Basis for the Special Status

Signature /Allison W. Mages/	Date October 10, 2011
Name (Print/Typed) Allison W. Mages	Registration Number 57,275

Note: Signatures of all the inventors or assignees of record of the entire interest or their representative(s) are required in accordance with 37 CFR 1.33 and 11.18. Please see 37 CFR 1.4(d) for the form of the signature. If necessary, submit multiple forms for more than one signature, see below.*

☐ *Total of _____ forms are submitted.

If you need assistance in completing the form, call 1-800-PTO-9199 and select option 2.

IN THE UNITED STATES PATENT AND TRADEMARK OFFICE

First Named Inventor: Kevin Wayne Kinzie	)
Confirmation No.: 9710	)
	)
Serial No.: 13/173,771	)
	)
Filing Date: 06-30-2011	)
	)
Atty Docket No.: 248657-2	)

VIA EFS
Commissioner for Patents
P.O. Box 1450
Alexandria, VA 22313-1450

Statement Concerning the Basis for the Special Status

SIR:

The present application relates generally to wind turbines and, more particularly, to a system methods for controlling the amplitude modulation of noise generated by wind turbines. (See [0001]).

Applicant respectfully submits that Special Status is sought on the basis that the present invention materially contributes to the discovery or development of renewable energy resources.

The undersigned representative may be contacted at the number below to facilitate the resolution of any matters. Please charge any fees that are incurred in connection with this Statement to deposit account no. 09-0470.

Respectfully submitted,

General Electric Company

By : /Allison W. Mages/
Allison W. Mages
Reg. No. 57,275

Dated: October 10, 2011

GE Global Patent Operation
2 Corporate Drive, Suite 648
Shelton, CT 06484
203-944-6730

UNITED STATES PATENT AND TRADEMARK OFFICE

Commissioner for Patents
United States Patent and Trademark Office
P.O. Box 1450
Alexandria, VA 22313-1450
www.uspto.gov

STROOCK & STROOCK & LAVAN LLP
180 MAIDEN LANE
NEW YORK, NY 10038

MAILED

MAR 26 2012

OFFICE OF PETITIONS

In re Application of

James Henley Cornwell
Application No. 13/173,866
Filed: June 30, 2011
Attorney Docket No. 002561/0051

DECISION ON PETITION
TO WITHDRAW
FROM RECORD

This is a decision on the Request to Withdraw as attorney or agent of record under 37 C.F.R. § 1.36(b), filed February 29, 2012.

The request is **APPROVED**.

A grantable request to withdraw as attorney/agent of record must be signed by every attorney/agent seeking to withdraw or contain a clear indication that one attorney is signing on behalf of another/others.

The request was signed by Brian M. Rothery on behalf of all attorneys of record who are associated with customer No. 26610. All attorneys/agents associated with the Customer Number 26610 have been withdrawn. Applicant is reminded that there is no attorney of record at this time.

The correspondence address of record has been changed and the new correspondence address is the address indicated below.

There are no pending Office actions at the present time.

Telephone inquiries concerning this decision should be directed to undersigned at 571-272-1642. All other inquiries concerning the examination or status of this application should be directed to the Technology Center.

/AMW/
April M. Wise
Petitions Examiner
Office of Petitions

cc: KAONETICS TECHNOLOGY, INC.
C/O FIRST CAPITAL BUSINESS DEVELOPMENT, LLC
16293 EAST DORADO PLACE
CENTENNIAL, CO 80015

UNITED STATES PATENT AND TRADEMARK OFFICE

UNITED STATES DEPARTMENT OF COMMERCE
United States Patent and Trademark Office
Address: COMMISSIONER FOR PATENTS
P.O. Box 1450
Alexandria, Virginia 22313-1450
www.uspto.gov

APPLICATION NUMBER	FILING OR 371(C) DATE	FIRST NAMED APPLICANT	ATTY. DOCKET NO./TITLE
13/173,866	06/30/2011	James Henley CORNWELL	002561/0051

CONFIRMATION NO. 9880

POWER OF ATTORNEY NOTICE

26610
STROOCK & STROOCK & LAVAN LLP
180 MAIDEN LANE
NEW YORK, NY 10038

OC000000053154678

Date Mailed: 03/15/2012

NOTICE REGARDING CHANGE OF POWER OF ATTORNEY

This is in response to the Power of Attorney filed 02/29/2012.

- The withdrawal as attorney in this application has been accepted. Future correspondence will be mailed to the new address of record. 37 CFR 1.33.

/amwise/

Office of Data Management, Application Assistance Unit (571) 272-4000, or (571) 272-4200, or 1-888-786-0101

PTO/SB/20PCT-EP (05-10)
Approved for use through 01/31/2012. OMB 0651-0058
U.S. Patent and Trademark Office; U. S. DEPARTMENT OF COMMERCE
Under the Paperwork Reduction Act of 1995, no persons are required to respond to a collection of information unless it displays a valid OMB control number.

REQUEST FOR PARTICIPATION IN THE PATENT COOPERATION TREATY - PATENT PROSECUTION HIGHWAY (PCT-PPH) PILOT PROGRAM BETWEEN THE EUROPEAN PATENT OFFICE (EPO) AND THE USPTO

Application No:	13/173,979	Filing date:	06/30/2011
First Named Inventor:	Paul A. Baker		
Title of the Invention:	Power Distribution Inside Cable		

THIS REQUEST FOR PARTICIPATION IN THE PCT-PPH PILOT PROGRAM ALONG WITH THE REQUIRED DOCUMENTS MUST BE SUBMITTED VIA EFS-WEB. INFORMATION REGARDING EFS-WEB IS AVAILABLE AT HTTP://WWW.USPTO.GOV/EBC/EFS_HELP.HTML

APPLICANT HEREBY REQUESTS PARTICIPATION IN THE PCT-PPH PROGRAM AND PETITIONS TO MAKE THE ABOVE-IDENTIFIED APPLICATION SPECIAL UNDER THE PCT-PPH PROGRAM.

The above-identified application is (1) a national stage entry of the corresponding PCT application, or (2) a national stage entry of another PCT application which claims priority to the corresponding PCT application, or (3) a national application that claims domestic/ foreign priority to the corresponding PCT application, or (4) a national application which forms the basis for the priority claim in the corresponding PCT application, or (5) a continuing application of a U.S. application that satisfies one of (1) to (4) above, or (6) a U.S. application that claims domestic benefit to a U.S. provisional application which forms the basis for the priority claim in the corresponding PCT application.

The corresponding PCT application number(s) is/are: PCT/US2011/042689

The international filing date of the corresponding PCT application(s) is/are: 06/30/2011

I. List of Required Documents:

a. **A copy of the latest international work product (WO/ISA, WO/IPEA, or IPER) in the above–identified corresponding PCT application(s)**

- [x] Is attached
- [ ] Is not attached because the document is already in the U.S. application.

b. **A copy of all claims which were indicated as having novelty, inventive step and industrial applicability in the above-identified corresponding PCT application(s).**

- [x] Is attached.
- [ ] Is not attached because the document is already in the U.S. application.

c. **English translations of the documents in a. and b. above are attached (if the documents are not in the English language). A statement that the English translation is accurate is attached for the document in b. above.**

This collection of information is required by 35 U.S.C. 119, 37 CFR 1.55, and 37 CFR 1.102(d). The information is required to obtain or retain a benefit by the public, which is to file (and by the USPTO to process) an application. Confidentiality is governed by 35 U.S.C. 122 and 37 CFR 1.11 and 1.14. This collection is estimated to take 2 hours to complete, including gathering, preparing, and submitting the completed application form to the USPTO. Time will vary depending upon the individual case. Any comments on the amount of time you require to complete this form and/or suggestions for reducing this burden should be sent to the Chief Information Officer, U.S. Patent and Trademark Office, U.S. Department of Commerce, P.O. Box 1450, Alexandria, VA 22313-1450. DO NOT SEND FEES OR COMPLETED FORMS TO THIS ADDRESS.

Approved for use through 01/31/2012. OMB 0651-0058
U.S.Patent and Trademark Office; U.S. DEPARTMENT OF COMMERCE

Under the Paperwork Reduction Act of 1995, no persons are required to respond to a collection of information unless it displays a valid OMB control number.

REQUEST FOR PARTICIPATION IN THE PCT-PPH PILOT PROGRAM BETWEEN THE EPO AND THE USPTO

(continued)

Application No.:	13/173,979
First Named Inventor:	Paul A. Baker

d. **(1) An information disclosure statement listing the documents cited in the international work products (ISR, WO/ISA, WO/IPEA, IPER) of the corresponding PCT application.**

☐ Is attached

☒ Has already been filed in the above-identified U.S. application on 11/18/2011

(2) Copies of all documents (except) for U.S. patents or U.S. patent application publications)

☐ Are attached.

☒ Have already been filed in the above-identified U.S. application on 11/18/2011

II. Claims Correspondence Table:

Claims in US Application	Patentable Claims in the corresponding PCT Application	Explanation regarding the correspondence
1-18	1-18	Identical: US claims 1-18 correspond to PCT claims 10-18 respectively.

III. All the claims in the US application sufficiently correspond to the patentable claims in the corresponding PCT application.

Signature /Ryan C. Sydenham/	Date
Name (Print/Typed) Ryan C. Sydenham	Registration Number 65,409

Privacy Act Statement

The **Privacy Act of 1974 (P.L. 93-579)** requires that you be given certain information in connection with your submission of the attached form related to a patent application or patent. Accordingly, pursuant to the requirements of the Act, please be advised that: (1) the general authority for the collection of this information is 35 U.S.C. 2(b)(2); (2) furnishing of the information solicited is voluntary; and (3) the principal purpose for which the information is used by the U.S. Patent and Trademark Office is to process and/or examine your submission related to a patent application or patent. If you do not furnish the requested information, the U.S. Patent and Trademark Office may not be able to process and/or examine your submission, which may result in termination of proceedings or abandonment of the application or expiration of the patent.

The information provided by you in this form will be subject to the following routine uses:

1. The information on this form will be treated confidentially to the extent allowed under the Freedom of Information Act (5 U.S.C. 552) and the Privacy Act (5 U.S.C 552a). Records from this system of records may be disclosed to the Department of Justice to determine whether disclosure of these records is required by the Freedom of Information Act.
2. A record from this system of records may be disclosed, as a routine use, in the course of presenting evidence to a court, magistrate, or administrative tribunal, including disclosures to opposing counsel in the course of settlement negotiations.
3. A record in this system of records may be disclosed, as a routine use, to a Member of Congress submitting a request involving an individual, to whom the record pertains, when the individual has requested assistance from the Member with respect to the subject matter of the record.
4. A record in this system of records may be disclosed, as a routine use, to a contractor of the Agency having need for the information in order to perform a contract. Recipients of information shall be required to comply with the requirements of the Privacy Act of 1974, as amended, pursuant to 5 U.S.C. 552a(m).
5. A record related to an International Application filed under the Patent Cooperation Treaty in this system of records may be disclosed, as a routine use, to the International Bureau of the World Intellectual Property Organization, pursuant to the Patent Cooperation Treaty.
6. A record in this system of records may be disclosed, as a routine use, to another federal agency for purposes of National Security review (35 U.S.C. 181) and for review pursuant to the Atomic Energy Act (42 U.S.C. 218(c)).
7. A record from this system of records may be disclosed, as a routine use, to the Administrator, General Services, or his/her designee, during an inspection of records conducted by GSA as part of that agency's responsibility to recommend improvements in records management practices and programs, under authority of 44 U.S.C. 2904 and 2906. Such disclosure shall be made in accordance with the GSA regulations governing inspection of records for this purpose, and any other relevant (*i.e.*, GSA or Commerce) directive. Such disclosure shall not be used to make determinations about individuals.
8. A record from this system of records may be disclosed, as a routine use, to the public after either publication of the application pursuant to 35 U.S.C. 122(b) or issuance of a patent pursuant to 35 U.S.C. 151. Further, a record may be disclosed, subject to the limitations of 37 CFR 1.14, as a routine use, to the public if the record was filed in an application which became abandoned or in which the proceedings were terminated and which application is referenced by either a published application, an application open to public inspection or an issued patent.
9. A record from this system of records may be disclosed, as a routine use, to a Federal, State, or local law enforcement agency, if the USPTO becomes aware of a violation or potential violation of law or regulation.

UNITED STATES PATENT AND TRADEMARK OFFICE

Commissioner for Patents
United States Patent and Trademark Office
P.O. Box 1450
Alexandria, VA 22313-1450
www.uspto.gov

KILPATRICK TOWNSEND & STOCKTON, LLP/Apple
TWO EMBARCADERO CENTER
8TH FLOOR
SAN FRANCISCO, CA 94111-3834

MAILED
JAN 20 2012
OFFICE OF PETITIONS

In re Application of	:
Paul A. Baker, et. al.	: DECISION ON REQUEST TO
Application No.: 13/173,979	: PARTICIPATE IN THE PATENT
Filed: June 30, 2011	: PROSECUTION HIGHWAY
Attorney Docket No.: 90911-802886	: PROGRAM AND PETITION
For: POWER DISTRIBUTION INSIDE	: TO MAKE SPECIAL UNDER
CABLE	: 37 CFR 1.102(a)

This is a decision on the renewed request to participate in the PCT Patent Prosecution Highway (PCT-PPH) pilot program and the petition under 37 CFR 1.102(a), filed on November 28, 2011, to make the above-identified application special.

The request and petition are **GRANTED**.

Discussion

A grantable request to participate in the PCT-PPH pilot program and petition to make special require:

(1) The U.S. application must have an eligible relationship to one or more PCT applications where the ISA or IPEA are the Australia, Austria, EPO, Finland, JPO, KIPO, NPI, NBPR, Spain, Sweden, USPTO, or CHINA;

(2) At least one claim in the PCT application has novelty, inventive step, and industrial applicability and must be free of any observations in Box VIII in the latest work product in the international stage or applicant must identify and explain why the claim(s) is/are not subject to the observation in Box VIII;

(3) Applicant must submit a copy of the claim(s) from the PCT application(s) that have novelty, inventive step, and industrial applicability along with an English translation thereof and a statement that the English translation is accurate, if the claims are not in the English language;

(4) All the claims in the U.S. application must sufficiently correspond or be amended to sufficiently correspond to the claim(s) that have novelty, inventive step, and industrial applicability in the PCT application(s);

(5) Examination of the U.S. application has not begun;

(6) Applicant must submit a copy of the latest international work product from the PCT application indicating that the claim(s) have novelty, inventive step, and industrial applicability along with an English translation thereof and a statement that the English translation is accurate if the latest international work product is not in the English language;

(7) Applicant must submit an IDS listing the documents cited by the PCT examiner in the international work product along with copies of documents except U.S. patents or U.S. patent application publications.

The request to participate in the PCT-PPH pilot program and petition comply with the above requirements. Accordingly, the above-identified application has been accorded "special" status.

Telephone inquiries concerning this decision should be directed to Andrea Smith at (571) 272-3226. All other inquiries concerning the examination or status of the application is accessible in the PAIR system at http://www.uspto.gov/ebc.index.html.

This application will be forwarded to the examiner for action on the merits commensurate with this decision.

/Andrea Smith/
Andrea Smith
Petitions Examiner
Office of Petitions

David Bucci
Petitions Examiner

UNITED STATES PATENT AND TRADEMARK OFFICE

Commissioner for Patents
United States Patent and Trademark Office
P.O. Box 1450
Alexandria, VA 22313-1450
www.uspto.gov

MAILED
SEP 13 2011
OFFICE OF PETITIONS

OBLON, SPIVAK, MCCLELLAND MAIER & NEUSTADT, LLP
1940 DUKE STREET
ALEXANDRIA VA 22314

In re application of :
Masayoshi Kobayashi et al :
Application No. 13/174,001 : NOTICE
Filed: June 30, 2011 :
Attorney Docket No. 380778US41DIV :

This is a notice regarding your request for acceptance of a fee deficiency submission under 37 CFR 1.28 on August 5, 2011.

The Office no longer investigates or rejects original or reissue patent under 37 CFR 1.56. **1098 Off. Gaz. Pat. Office 502 (January 3, 1989)**. Therefore, nothing in this Notice is intended to imply that an investigation was done.

Your fee deficiency submission under 37 CFR 1.28 is hereby **ACCEPTED**.

This application is no longer entitled to small entity status. Accordingly, all future fees paid in this application must be paid at the large entity rate.

Inquiries related to this communication should be directed to the undersigned at (571) 272-3208.

/KOC/
Karen Creasy
Petitions Examiner
Office of Petitions

PTO/SB/20PCT-KR (06-10)
Approved for use through 01/31/2015. OMB 0651-0058
U.S. Patent and Trademark Office; U.S DEPARTMENT OF COMMERCE
Under the Paperwork Reduction Act of 1995, no persons are required to respond to a collection of information unless it displays a valid OMB control number.

REQUEST FOR PARTICIPATION IN THE PATENT COOPERATION TREATY – PATENT PROSECUTION HIGHWAY (PCT-PPH) PILOT PROGRAM BETWEEN THE KOREAN INTELLECTUAL PROPERTY OFFICE (KIPO) AND THE USPTO

Application No.:	13/174,002	First Named Inventor:	Kevin L. Currence
Filing Date:	June 30, 2011	Attorney Docket No.:	42088
Title of the Invention:	METHODS AND SYSTEMS FOR RECOVERING LIQUIFIED PETROLEUM GAS FROM NATURAL GAS		

THIS REQUEST FOR PARTICIPATION IN THE PCT-PPH PILOT PROGRAM ALONG WITH THE REQUIRED DOCUMENTS MUST BE SUBMITTED VIA EFS-WEB. INFORMATION REGARDING EFS-WEB IS AVAILABLE AT HTTP://WWW.USPTO.GOV/EBC/EFS_HELP.HTML.

APPLICANT HEREBY REQUESTS PARTICIPATION IN THE PCT-PPH PILOT PROGRAM AND PETITIONS TO MAKE THE ABOVE-IDENTIFIED APPLICATION SPECIAL UNDER THE PCT-PPH PILOT PROGRAM.

The above-identified application is (1) a national stage entry of the corresponding PCT application, or (2) a national stage entry of another PCT application which claims priority to the corresponding PCT application, or (3) a national application that claims domestic/ foreign priority to the corresponding PCT application, or (4) a national application which forms the basis for the priority claim in the corresponding PCT application, or (5) a continuing application of a U.S. application that satisfies one of (1) to (4) above, or (6) a U.S. application that claims domestic benefit to a U.S. provisional application which forms the basis for the priority claim in the corresponding PCT application.

The corresponding PCT application number(s) is/are: PCT/US2011/042654

The international filing date of the corresponding PCT application(s) is/are: June 30, 2011

I. List of Required Documents:

a. **A copy of the latest international work product (WO/ISA, WO/IPEA, or IPER) in the above-identified corresponding PCT application(s)**

☑ is attached.

☐ is not attached because the document is already in the U.S. application.

b. **A copy of all claims which were indicated as having novelty, inventive step and industrial applicability in the above-identified corresponding PCT application(s)**

☑ is attached.

☐ is not attached because the document is already in the U.S. application.

c. **English translations of the documents in a. and b. above are attached (if the documents are not in the English language). A statement that the English translation is accurate is attached for the document in b. above.**

d. **(1) An information disclosure statement listing the documents cited in the international work products (ISR, WO/ISA, WO/IPEA, IPER) of the corresponding PCT application.**

☑ is attached.

☐ has already been filed in the above-identified U.S. application on _____

(2) Copies of all documents (except for U.S. patents or U.S. patent application publications)

☑ are attached.

☐ have already been filed in the above-identified U.S. application on _____

This collection of information is required by 35 U.S.C. 119, 37 CFR 1.55, and 37 CFR 1.102(d). The information is required to obtain or retain a benefit by the public, which is to file (and by the USPTO to process) an application. Confidentiality is governed by 35 U.S.C. 122 and 37 CFR 1.11 and 1.14. This collection is estimated to take 2 hours to complete, including gathering, preparing, and submitting the completed application form to the USPTO. Time will vary depending upon the individual case. Any comments on the amount of time you require to complete this form and/or suggestions for reducing this burden should be sent to the Chief Information Officer, U.S. Patent and Trademark Office, U.S. Department of Commerce, P.O. Box 1450, Alexandria, VA 22313-1450. DO NOT SEND FEES OR COMPLETED FORMS TO THIS ADDRESS.

PTO/SB/20PCT-KR (06-10)
Approved for use through 01/31/2015. OMB 0651-0058
U.S. Patent and Trademark Office; U.S DEPARTMENT OF COMMERCE
Under the Paperwork Reduction Act of 1995, no persons are required to respond to a collection of information unless it displays a valid OMB control number.

REQUEST FOR PARTICIPATION IN THE PCT-PPH PILOT PROGRAM BETWEEN THE KIPO AND THE USPTO

(continued)

Application No.:	13/174002	First Named Inventor:	Kevin L. Currence

II. Claims Correspondence Table:

Claims in US Application	Patentable Claims in the corresponding PCT application	Explanation regarding the correspondence
1-21	1-21	all claims identical

III. All the claims in the US application sufficiently correspond to the patentable claims in the corresponding PCT application.

Signature	Date 4-16-2012
Name (Print/Typed) Gregory J. Skoch	Registration Number 48, 267

Privacy Act Statement

The **Privacy Act of 1974 (P.L. 93-579)** requires that you be given certain information in connection with your submission of the attached form related to a patent application or patent. Accordingly, pursuant to the requirements of the Act, please be advised that: (1) the general authority for the collection of this information is 35 U.S.C. 2(b)(2); (2) furnishing of the information solicited is voluntary; and (3) the principal purpose for which the information is used by the U.S. Patent and Trademark Office is to process and/or examine your submission related to a patent application or patent. If you do not furnish the requested information, the U.S. Patent and Trademark Office may not be able to process and/or examine your submission, which may result in termination of proceedings or abandonment of the application or expiration of the patent.

The information provided by you in this form will be subject to the following routine uses:

1. The information on this form will be treated confidentially to the extent allowed under the Freedom of Information Act (5 U.S.C. 552) and the Privacy Act (5 U.S.C 552a). Records from this system of records may be disclosed to the Department of Justice to determine whether disclosure of these records is required by the Freedom of Information Act.
2. A record from this system of records may be disclosed, as a routine use, in the course of presenting evidence to a court, magistrate, or administrative tribunal, including disclosures to opposing counsel in the course of settlement negotiations.
3. A record in this system of records may be disclosed, as a routine use, to a Member of Congress submitting a request involving an individual, to whom the record pertains, when the individual has requested assistance from the Member with respect to the subject matter of the record.
4. A record in this system of records may be disclosed, as a routine use, to a contractor of the Agency having need for the information in order to perform a contract. Recipients of information shall be required to comply with the requirements of the Privacy Act of 1974, as amended, pursuant to 5 U.S.C. 552a(m).
5. A record related to an International Application filed under the Patent Cooperation Treaty in this system of records may be disclosed, as a routine use, to the International Bureau of the World Intellectual Property Organization, pursuant to the Patent Cooperation Treaty.
6. A record in this system of records may be disclosed, as a routine use, to another federal agency for purposes of National Security review (35 U.S.C. 181) and for review pursuant to the Atomic Energy Act (42 U.S.C. 218(c)).
7. A record from this system of records may be disclosed, as a routine use, to the Administrator, General Services, or his/her designee, during an inspection of records conducted by GSA as part of that agency's responsibility to recommend improvements in records management practices and programs, under authority of 44 U.S.C. 2904 and 2906. Such disclosure shall be made in accordance with the GSA regulations governing inspection of records for this purpose, and any other relevant (*i.e.*, GSA or Commerce) directive. Such disclosure shall not be used to make determinations about individuals.
8. A record from this system of records may be disclosed, as a routine use, to the public after either publication of the application pursuant to 35 U.S.C. 122(b) or issuance of a patent pursuant to 35 U.S.C. 151. Further, a record may be disclosed, subject to the limitations of 37 CFR 1.14, as a routine use, to the public if the record was filed in an application which became abandoned or in which the proceedings were terminated and which application is referenced by either a published application, an application open to public inspection or an issued patent.
9. A record from this system of records may be disclosed, as a routine use, to a Federal, State, or local law enforcement agency, if the USPTO becomes aware of a violation or potential violation of law or regulation.

UNITED STATES PATENT AND TRADEMARK OFFICE

Commissioner for Patents
United States Patent and Trademark Office
P.O. Box 1450
Alexandria, VA 22313-1450
www.uspto.gov

SPRINKLE IP LAW GROUP / ZIMMER
1301 W. 25TH STREET
SUITE 408
AUSTIN, TX 78705

MAILED

APR 17 2012

OFFICE OF PETITIONS

In re Application of
Christian Baccelli, et al.
Application No. 13/174,074
Filed: June 30, 2011
Attorney Docket No. ZIMM1840-1

DECISION ON PETITION
TO WITHDRAW
FROM RECORD

This is a decision on the Request to Withdraw as attorney or agent of record under 37 C.F.R. § 1.36(b), filed February 25, 2012.

The request is **DISMISSED** as moot.

A review of the file record indicates that the power of attorney to Sprinkle IP Law Group / Zimmer has been revoked by the assignee of the patent application on February 16, 2012. Accordingly, the request to withdraw under 37 C.F.R. § 1.36(b) is moot.

All future communications from the Office will continue to be directed to the below-listed address until otherwise notified by applicant.

Telephone inquires concerning this decision should be directed to undersigned at 571-272-1642.

/AMW/
April M. Wise
Petitions Examiner
Office of Petitions

IN THE UNITED STATES PATENT AND TRADEMARK OFFICE

In re Application of:	
Milan Milenkovic	Examiner: TBD
Application No.: TBD	Art Unit: TBD
Filed: TBD	
For: Techniques for Determining Platform Energy Usage	

Commissioner for Patents
P.O. Box 1450
Alexandria, VA 22313-1450

STATEMENT OF SPECIAL STATUS

Dear Sir/Mdm:

Applicants respectfully submit that the above-identified application is eligible for the Green Technology Pilot Program in that the described subject matter materially contributes to the more efficient utilization and conservation of energy resources.

In this regard, the application describes a method and system for determining an energy-efficient operating point of a platform. The platform has logic to provide feedback to a user of a platform to enable the user to more efficiently and intelligently manage his/her energy consumption.

It is respectfully submitted that the above petition should be granted and the above application should be accorded special status under the Green Technology Pilot Program.

Respectfully submitted,

BLAKELY, SOKOLOFF, TAYLOR & ZAFMAN LLP

Date: June 30, 2011

/Paul A. Mendonsa/
Paul A. Mendonsa
Reg. No. 42,879

1279 Oakmead Parkway
Sunnyvale, CA 94085-4040
(503) 439-8778

Doc Code: PET.GREEN
Document Description: Petition for Green Tech Pilot

PTO/SB/420 (03-11)

PETITION TO MAKE SPECIAL UNDER THE GREEN TECHNOLOGY PILOT PROGRAM

Attorney Docket Number: 42P38304	Application Number (if known): TBD	Filing date: FILED HEREWITH

First Named Inventor: MILAN MILENKOVIC

Title: TECHNIQUES FOR DETERMINING PLATFORM ENERGY USAGE

APPLICANT HEREBY REQUESTS TO PARTICIPATE IN THE GREEN TECHNOLOGY PILOT PROGRAM FOR THE ABOVE-IDENTIFIED APPLICATION. See Instruction Sheet on page 2.

This petition must be timely filed electronically using the USPTO electronic filing system, EFS-Web.

1. By filing this petition:

   Applicant is requesting early publication: Applicant hereby requests early publication under 37 CFR 1.219 and the publication fee set forth in 37 CFR 1.18(d) accompanies this request.

2. By filing this petition: applicant is agreeing to make an election without traverse in a telephonic interview and elect an invention that meets the eligibility requirements for the Green Technology Pilot Program, if the Office determines that the claims are not obviously directed to a single invention. See Instruction Sheet.

3. This request is accompanied by statements of special status for the eligibility requirement.

4. The application contains no more than three (3) independent claims and twenty (20) total claims.

5. The application does not contain any multiple dependent claims.

6. Other attachments: _____

Signature /Paul A. Mendonsa/	Date 6/30/11
Name (Print/Typed) Paul A. Mendonsa	Registration Number 42879

Note: *Signatures of all the inventors or assignees of record of the entire interest or their representative(s) are required in accordance with 37 CFR 1.33 and 11.18. Please see 37 CFR 1.4(d) for the form of the signature. If necessary, submit multiple forms for more than one signature, see below*.*

☐ *Total of _____ forms are submitted.

If you need assistance in completing the form, call 1-800-PTO-9199 and select option 2.

Instruction Sheet for
Petition to Make Special Under the Green Technology Pilot Program

(Not to be Submitted to the USPTO)

The following is a summary of the requirements (for more information see the notices (i) "Pilot Program for Green Technologies Including Greenhouse Gas Reduction," (ii) "Elimination of Classification Requirement in the Green Technology Pilot Program," and (iii) "Expansion and Extension of the Green Technology Pilot Program," available on the USPTO web site at http://www.uspto.gov/patents/init_events/green_tech.jsp):

(1) The application must be a non-reissue, non-provisional utility application filed under 35 U.S.C. 111(a), or an international application that has entered the national stage in compliance with 35 U.S.C. 371, irrespective of the filing date of the application. Reexamination proceedings are excluded from this pilot program.

(2) The application must contain three or fewer independent claims and twenty or fewer total claims. The application must not contain any multiple dependent claims. For an application that contains more than three independent claims or twenty total claims, or multiple dependent claims, applicant must file a preliminary amendment in compliance with 37 CFR 1.121 to cancel the excess claims and/or the multiple dependent claims at the time the petition to make special is filed.

(3) The claims must be directed to a single invention that materially enhances the quality of the environment, or that materially contributes to: (1) the discovery or development of renewable energy resources; (2) the more efficient utilization and conservation of energy resources; or (3) green house gas emission reduction (see the eligibility requirements of sections II and III of the notice (i) cited above). The petition must include a statement that, if the USPTO determines that the claims are directed to multiple inventions (e.g., in a restriction requirement), applicant will agree to make an election without traverse in a telephonic interview, and elect an invention that meets the eligibility requirements in section II or III of the notice (i) cited above.

(4) The petition to make special must be timely filed electronically using the USPTO electronic filing system, EFS-Web, and selecting the document description of "Petition for Green Tech Pilot" on the EFS-Web screen. Applicant should use form PTO/SB/420, which is available as a Portable Document Format (PDF) fillable form in EFS-Web and on the USPTO Web site.

(5) The petition to make special must be filed at least one day prior to the date that a first Office action (which may be an Office action containing only a restriction requirement) appears in the Patent Application Information Retrieval (PAIR) system. Applicant may check the status of the application using PAIR.

(6) The petition to make special must be accompanied by a request for early publication in compliance with 37 CFR 1.219 and the publication fee set forth in 37 CFR 1.18(d).

Privacy Act Statement

The **Privacy Act of 1974 (P.L. 93-579)** requires that you be given certain information in connection with your submission of the attached form related to a patent application or patent. Accordingly, pursuant to the requirements of the Act, please be advised that: (1) the general authority for the collection of this information is 35 U.S.C. 2(b)(2); (2) furnishing of the information solicited is voluntary; and (3) the principal purpose for which the information is used by the U.S. Patent and Trademark Office is to process and/or examine your submission related to a patent application or patent. If you do not furnish the requested information, the U.S. Patent and Trademark Office may not be able to process and/or examine your submission, which may result in termination of proceedings or abandonment of the application or expiration of the patent.

The information provided by you in this form will be subject to the following routine uses:

1. The information on this form will be treated confidentially to the extent allowed under the Freedom of Information Act (5 U.S.C. 552) and the Privacy Act (5 U.S.C 552a). Records from this system of records may be disclosed to the Department of Justice to determine whether disclosure of these records is required by the Freedom of Information Act.
2. A record from this system of records may be disclosed, as a routine use, in the course of presenting evidence to a court, magistrate, or administrative tribunal, including disclosures to opposing counsel in the course of settlement negotiations.
3. A record in this system of records may be disclosed, as a routine use, to a Member of Congress submitting a request involving an individual, to whom the record pertains, when the individual has requested assistance from the Member with respect to the subject matter of the record.
4. A record in this system of records may be disclosed, as a routine use, to a contractor of the Agency having need for the information in order to perform a contract. Recipients of information shall be required to comply with the requirements of the Privacy Act of 1974, as amended, pursuant to 5 U.S.C. 552a(m).
5. A record related to an International Application filed under the Patent Cooperation Treaty in this system of records may be disclosed, as a routine use, to the International Bureau of the World Intellectual Property Organization, pursuant to the Patent Cooperation Treaty.
6. A record in this system of records may be disclosed, as a routine use, to another federal agency for purposes of National Security review (35 U.S.C. 181) and for review pursuant to the Atomic Energy Act (42 U.S.C. 218(c)).
7. A record from this system of records may be disclosed, as a routine use, to the Administrator, General Services, or his/her designee, during an inspection of records conducted by GSA as part of that agency's responsibility to recommend improvements in records management practices and programs, under authority of 44 U.S.C. 2904 and 2906. Such disclosure shall be made in accordance with the GSA regulations governing inspection of records for this purpose, and any other relevant (*i.e.*, GSA or Commerce) directive. Such disclosure shall not be used to make determinations about individuals.
8. A record from this system of records may be disclosed, as a routine use, to the public after either publication of the application pursuant to 35 U.S.C. 122(b) or issuance of a patent pursuant to 35 U.S.C. 151. Further, a record may be disclosed, subject to the limitations of 37 CFR 1.14, as a routine use, to the public if the record was filed in an application which became abandoned or in which the proceedings were terminated and which application is referenced by either a published application, an application open to public inspection or an issued patent.
9. A record from this system of records may be disclosed, as a routine use, to a Federal, State, or local law enforcement agency, if the USPTO becomes aware of a violation or potential violation of law or regulation.

UNITED STATES PATENT AND TRADEMARK OFFICE

UNITED STATES DEPARTMENT OF COMMERCE
United States Patent and Trademark Office
Address: COMMISSIONER FOR PATENTS
P.O. Box 1450
Alexandria, Virginia 22313-1450
www.uspto.gov

APPLICATION NO.	FILING DATE	FIRST NAMED INVENTOR	ATTORNEY DOCKET NO.	CONFIRMATION NO.
13/174,126	06/30/2011	MILAN MILENKOVIC	42P38304	1345

45209 7590 09/22/2011
MISSION/BSTZ
BLAKELY SOKOLOFF TAYLOR & ZAFMAN LLP
1279 OAKMEAD PARKWAY
SUNNYVALE, CA 94085-4040

EXAMINER

ART UNIT	PAPER NUMBER
2857	

MAIL DATE	DELIVERY MODE
09/22/2011	PAPER

Please find below and/or attached an Office communication concerning this application or proceeding.

The time period for reply, if any, is set in the attached communication.

UNITED STATES PATENT AND TRADEMARK OFFICE

Commissioner for Patents
United States Patent and Trademark Office
P.O. Box 1450
Alexandria, VA 22313-1450
www.uspto.gov

MISSION/BSTZ
BLAKELY SOKOLOFF TAYLOR & ZAFMAN LLP
1279 OAKMEAD PARKWAY
SUNNYVALE CA 94085-4040

In re Application of	:	
MILENKOVIC et al.	:	DECISION ON PETITION
Application No. 13/174126	:	TO MAKE SPECIAL UNDER
Filed: June 30, 2011	:	THE GREEN TECHNOLOGY
Attorney Docket No. 42P38304	:	PILOT PROGRAM

This is a decision on the petition under 37 CFR 1.102, filed on June 30, 2011, to make the above-identified application special under the pilot program for applications pertaining to Green Technologies as set forth 74 Federal Register Notice 64666 (December 8, 2009) and amended by 75 Federal Register Notice 28554 (May 21, 2010) and 75 Federal Register Notice 69049 (November 10, 2010).

The petition is **DISMISSED**.

If reconsideration of this decision is desired, a petition for reconsideration must be filed within ONE (1) MONTH OR THIRTY (30) DAYS from the mail date of this decision, whichever is longer. No extension of this time limit can be granted under 37 CFR 1.136(a) or (b). The petition for reconsideration should include an exhaustive attempt to provide the lacking item(s) noted below, since, after a decision on the petition for reconsideration, no further reconsideration or review of the matter will be undertaken by the Director.

A grantable petition to make an application special under 37 CFR 1.102 and the pilot program as set forth in 74 FR 64666 must be directed to a nonprovisional application filed under 35 USC 111(a) or be a national stage entry under 35 USC 371, exclusive of any reissue applications and be filed prior to the date of the notice, December 8, 2009.

In order to qualify for special status, the following requirements must be met. 1) The application must have no more than 3 independent claims and no more than 20 total claims. 2) The application must not contain any multiple dependent claims. 3) The petition must state the basis for seeking special status, i.e., the claimed invention either: A) materially enhances the quality of the environment or B) materially contributes to: i) the discovery or development of renewable energy resources, ii) the more efficient utilization and conservation of energy resources, or iii) greenhouse gas emission reduction. 4) If the disclosure is not clear on its face that the claimed invention materially contributes under category (A) or (B), the petition must be accompanied by a statement by the applicant, assignee, or an attorney/agent registered to practice before the

Office explaining how the materiality standard is met. 5) A statement that applicant will agree to make an election without traverse in a telephonic interview if a restriction requirement is made by the examiner. 6) The petition to make special must be filed electronically. 7) The petition must be filed at least one day prior to the date that a first Office Action appears in the Patent Application Information Retrieval (PAIR) system. 8) The petition must be accompanied by a request for early publication in compliance with 37 CFR 1.219 and include the publication fee as set forth in 37 CFR 1.18(d).

The requirement for a fee for consideration of the petition to make special for applications pertaining to Green Technologies has been waived.

The petition lacks item 4.

In regard to item 4, applicant's statement pertaining to how the materiality standard is met does not satisfy the requirements for this pilot. The petition alleges that the claimed invention contributes to more efficient utilization and conservation of energy resources. The claims are generally directed to monitoring the energy consumption of a device. The materiality standard does not permit an applicant to speculate as to how a hypothetical end-user might specially apply the invention in a manner that could contribute to more efficient utilization and conservation of energy resources. Any argument that the claimed invention can be used to provide more efficient utilization of energy resources is considered speculate as to how a hypothetical end-user might specially apply the claimed invention. Further, it is not readily apparent how the claimed invention results in more efficient utilization of energy resources (which is required for basis B ii above). It would stand to reason that reducing the power input to a given device would reduce the work output from the device. The reduction of input power does not equate to more efficient utilization of energy. For example, a dimmer switch for a light does not increase the efficiency of the light.

Any reconsideration of this decision should be submitted through the USPTO electronic filing system, EFS-Web, and selecting the document description of "Petition for Green Tech Pilot" on the EFS-Web screen.

Telephone inquiries concerning this decision should be directed to Colleen Dunn at 571-272-1170.

The application is being forwarded to the appropriate Technology Center Art Unit for action in its regular turn.

/Colleen Dunn/

Colleen Dunn
Quality Assurance Specialist
Technology Center 2800

Doc Code: PET.GREEN
Document Description: Petition for Green Tech Pilot

PTO/SB/420 (03-11)

PETITION TO MAKE SPECIAL UNDER THE GREEN TECHNOLOGY PILOT PROGRAM

Attorney Docket Number: 42P38305	Application Number (if known): TBD	Filing date: FILED HEREWITH

First Named Inventor: MILAN MILENKOVIC

Title: TECHNIQUES FOR PROVIDING HOLISTIC VIEWS OF PERSONAL ENERGY CONSUMPTION

APPLICANT HEREBY REQUESTS TO PARTICIPATE IN THE GREEN TECHNOLOGY PILOT PROGRAM FOR THE ABOVE-IDENTIFIED APPLICATION. See Instruction Sheet on page 2.

This petition must be timely filed electronically using the USPTO electronic filing system, EFS-Web.

1. By filing this petition:

   Applicant is requesting early publication: Applicant hereby requests early publication under 37 CFR 1.219 and the publication fee set forth in 37 CFR 1.18(d) accompanies this request.

2. By filing this petition: applicant is agreeing to make an election without traverse in a telephonic interview and elect an invention that meets the eligibility requirements for the Green Technology Pilot Program, if the Office determines that the claims are not obviously directed to a single invention. See Instruction Sheet.

3. This request is accompanied by statements of special status for the eligibility requirement.

4. The application contains no more than three (3) independent claims and twenty (20) total claims.

5. The application does not contain any multiple dependent claims.

6. Other attachments: _____

Signature /Paul A. Mendonsa/	Date 6/30/11
Name (Print/Typed) Paul A. Mendonsa	Registration Number 42879

Note: *Signatures of all the inventors or assignees of record of the entire interest or their representative(s) are required in accordance with 37 CFR 1.33 and 11.18. Please see 37 CFR 1.4(d) for the form of the signature. If necessary, submit multiple forms for more than one signature, see below*.*

☐ *Total of _____ forms are submitted.

If you need assistance in completing the form, call 1-800-PTO-9199 and select option 2.

Instruction Sheet for
Petition to Make Special Under the Green Technology Pilot Program

(Not to be Submitted to the USPTO)

The following is a summary of the requirements (for more information see the notices (i) "Pilot Program for Green Technologies Including Greenhouse Gas Reduction," (ii) "Elimination of Classification Requirement in the Green Technology Pilot Program," and (iii) "Expansion and Extension of the Green Technology Pilot Program," available on the USPTO web site at http://www.uspto.gov/patents/init_events/green_tech.jsp):

(1) The application must be a non-reissue, non-provisional utility application filed under 35 U.S.C. 111(a), or an international application that has entered the national stage in compliance with 35 U.S.C. 371, irrespective of the filing date of the application. Reexamination proceedings are excluded from this pilot program.

(2) The application must contain three or fewer independent claims and twenty or fewer total claims. The application must not contain any multiple dependent claims. For an application that contains more than three independent claims or twenty total claims, or multiple dependent claims, applicant must file a preliminary amendment in compliance with 37 CFR 1.121 to cancel the excess claims and/or the multiple dependent claims at the time the petition to make special is filed.

(3) The claims must be directed to a single invention that materially enhances the quality of the environment, or that materially contributes to: (1) the discovery or development of renewable energy resources; (2) the more efficient utilization and conservation of energy resources; or (3) green house gas emission reduction (see the eligibility requirements of sections II and III of the notice (i) cited above). The petition must include a statement that, if the USPTO determines that the claims are directed to multiple inventions (e.g., in a restriction requirement), applicant will agree to make an election without traverse in a telephonic interview, and elect an invention that meets the eligibility requirements in section II or III of the notice (i) cited above.

(4) The petition to make special must be timely filed electronically using the USPTO electronic filing system, EFS-Web, and selecting the document description of "Petition for Green Tech Pilot" on the EFS-Web screen. Applicant should use form PTO/SB/420, which is available as a Portable Document Format (PDF) fillable form in EFS-Web and on the USPTO Web site.

(5) The petition to make special must be filed at least one day prior to the date that a first Office action (which may be an Office action containing only a restriction requirement) appears in the Patent Application Information Retrieval (PAIR) system. Applicant may check the status of the application using PAIR.

(6) The petition to make special must be accompanied by a request for early publication in compliance with 37 CFR 1.219 and the publication fee set forth in 37 CFR 1.18(d).

Privacy Act Statement

The **Privacy Act of 1974 (P.L. 93-579)** requires that you be given certain information in connection with your submission of the attached form related to a patent application or patent. Accordingly, pursuant to the requirements of the Act, please be advised that: (1) the general authority for the collection of this information is 35 U.S.C. 2(b)(2); (2) furnishing of the information solicited is voluntary; and (3) the principal purpose for which the information is used by the U.S. Patent and Trademark Office is to process and/or examine your submission related to a patent application or patent. If you do not furnish the requested information, the U.S. Patent and Trademark Office may not be able to process and/or examine your submission, which may result in termination of proceedings or abandonment of the application or expiration of the patent.

The information provided by you in this form will be subject to the following routine uses:

1. The information on this form will be treated confidentially to the extent allowed under the Freedom of Information Act (5 U.S.C. 552) and the Privacy Act (5 U.S.C 552a). Records from this system of records may be disclosed to the Department of Justice to determine whether disclosure of these records is required by the Freedom of Information Act.
2. A record from this system of records may be disclosed, as a routine use, in the course of presenting evidence to a court, magistrate, or administrative tribunal, including disclosures to opposing counsel in the course of settlement negotiations.
3. A record in this system of records may be disclosed, as a routine use, to a Member of Congress submitting a request involving an individual, to whom the record pertains, when the individual has requested assistance from the Member with respect to the subject matter of the record.
4. A record in this system of records may be disclosed, as a routine use, to a contractor of the Agency having need for the information in order to perform a contract. Recipients of information shall be required to comply with the requirements of the Privacy Act of 1974, as amended, pursuant to 5 U.S.C. 552a(m).
5. A record related to an International Application filed under the Patent Cooperation Treaty in this system of records may be disclosed, as a routine use, to the International Bureau of the World Intellectual Property Organization, pursuant to the Patent Cooperation Treaty.
6. A record in this system of records may be disclosed, as a routine use, to another federal agency for purposes of National Security review (35 U.S.C. 181) and for review pursuant to the Atomic Energy Act (42 U.S.C. 218(c)).
7. A record from this system of records may be disclosed, as a routine use, to the Administrator, General Services, or his/her designee, during an inspection of records conducted by GSA as part of that agency's responsibility to recommend improvements in records management practices and programs, under authority of 44 U.S.C. 2904 and 2906. Such disclosure shall be made in accordance with the GSA regulations governing inspection of records for this purpose, and any other relevant (*i.e.*, GSA or Commerce) directive. Such disclosure shall not be used to make determinations about individuals.
8. A record from this system of records may be disclosed, as a routine use, to the public after either publication of the application pursuant to 35 U.S.C. 122(b) or issuance of a patent pursuant to 35 U.S.C. 151. Further, a record may be disclosed, subject to the limitations of 37 CFR 1.14, as a routine use, to the public if the record was filed in an application which became abandoned or in which the proceedings were terminated and which application is referenced by either a published application, an application open to public inspection or an issued patent.
9. A record from this system of records may be disclosed, as a routine use, to a Federal, State, or local law enforcement agency, if the USPTO becomes aware of a violation or potential violation of law or regulation.

IN THE UNITED STATES PATENT AND TRADEMARK OFFICE

In re Application of:	
Milan Milenkovic	Examiner: TBD
Application No.: TBD	Art Unit: TBD
Filed: TBD	
For: Techniques for Providing Holistic Views of Personal Energy Consumption	

Commissioner for Patents
P.O. Box 1450
Alexandria, VA 22313-1450

STATEMENT OF SPECIAL STATUS

Dear Sir/Mdm:

Applicants respectfully submit that the above-identified application is eligible for the Green Technology Pilot Program in that the described subject matter materially contributes to the more efficient utilization and conservation of energy resources.

In this regard, the application describes a method and system for determining an energy-efficient operating point of a platform. The platform has logic to provide feedback to a user of a platform to enable the user to more efficiently and intelligently manage his/her energy consumption.

It is respectfully submitted that the above petition should be granted and the above application should be accorded special status under the Green Technology Pilot Program.

Respectfully submitted,

BLAKELY, SOKOLOFF, TAYLOR & ZAFMAN LLP

Date: June 30, 2011

/Paul A. Mendonsa/
Paul A. Mendonsa
Reg. No. 42,879

1279 Oakmead Parkway
Sunnyvale, CA 94085-4040
(503) 439-8778

UNITED STATES PATENT AND TRADEMARK OFFICE

UNITED STATES DEPARTMENT OF COMMERCE
United States Patent and Trademark Office
Address: COMMISSIONER FOR PATENTS
P.O. Box 1450
Alexandria, Virginia 22313-1450
www.uspto.gov

APPLICATION NO.	FILING DATE	FIRST NAMED INVENTOR	ATTORNEY DOCKET NO.	CONFIRMATION NO.
13/174,159	06/30/2011	MILAN MILENKOVIC	42P38305	1400

45209 7590 09/13/2011
MISSION/BSTZ
BLAKELY SOKOLOFF TAYLOR & ZAFMAN LLP
1279 OAKMEAD PARKWAY
SUNNYVALE, CA 94085-4040

EXAMINER

ART UNIT	PAPER NUMBER
2612	

MAIL DATE	DELIVERY MODE
09/13/2011	PAPER

Please find below and/or attached an Office communication concerning this application or proceeding.

The time period for reply, if any, is set in the attached communication.

UNITED STATES PATENT AND TRADEMARK OFFICE

Commissioner for Patents
United States Patent and Trademark Office
P.O. Box 1450
Alexandria, VA 22313-1450
www.uspto.gov

MISSION/BSTZ
BLAKELY SOKOLOFF TAYLOR & ZAFMAN LLP
1279 OAKMEAD PARKWAY
SUNNYVALE CA 94085-4040

In re Application of	:	
MILENKOVIC et al.	:	DECISION ON PETITION
Application No. 13/174,159	:	TO MAKE SPECIAL UNDER
Filed: June 30, 2011	:	THE GREEN TECHNOLOGY
Attorney Docket No. 42P38305	:	PILOT PROGRAM

This is a decision on the petition under 37 CFR 1.102, filed on June 30, 2011, to make the above-identified application special under the pilot program for applications pertaining to Green Technologies as set forth 74 Federal Register Notice 64666 (December 8, 2009) and amended by 75 Federal Register Notice 28554 (May 21, 2010) and 75 Federal Register Notice 69049 (November 10, 2010).

The petition is **DISMISSED**.

If reconsideration of this decision is desired, a petition for reconsideration must be filed within ONE (1) MONTH OR THIRTY (30) DAYS from the mail date of this decision, whichever is longer. No extension of this time limit can be granted under 37 CFR 1.136(a) or (b). The petition for reconsideration should include an exhaustive attempt to provide the lacking item(s) noted below, since, after a decision on the petition for reconsideration, no further reconsideration or review of the matter will be undertaken by the Director.

A grantable petition to make an application special under 37 CFR 1.102 and the pilot program as set forth in 74 FR 64666 must be directed to a nonprovisional application filed under 35 USC 111(a) or be a national stage entry under 35 USC 371, exclusive of any reissue applications and be filed prior to the date of the notice, December 8, 2009.

In order to qualify for special status, the following requirements must be met. 1) The application must have no more than 3 independent claims and no more than 20 total claims. 2) The application must not contain any multiple dependent claims. 3) The petition must state the basis for seeking special status, i.e., the claimed invention either: A) materially enhances the quality of the environment or B) materially contributes to: i) the discovery or development of renewable energy resources, ii) the more efficient utilization and conservation of energy resources, or iii) greenhouse gas emission reduction. 4) If the disclosure is not clear on its face that the claimed invention materially contributes under category (A) or (B), the petition must be accompanied by a statement by the applicant, assignee, or an attorney/agent registered to practice before the

Office explaining how the materiality standard is met. 5) A statement that applicant will agree to make an election without traverse in a telephonic interview if a restriction requirement is made by the examiner. 6) The petition to make special must be filed electronically. 7) The petition must be filed at least one day prior to the date that a first Office Action appears in the Patent Application Information Retrieval (PAIR) system. 8) The petition must be accompanied by a request for early publication in compliance with 37 CFR 1.219 and include the publication fee as set forth in 37 CFR 1.18(d).

The requirement for a fee for consideration of the petition to make special for applications pertaining to Green Technologies has been waived.

The petition lacks item 4.

In regard to item 4, applicant's statement pertaining to how the materiality standard is met does not satisfy the requirements for this pilot. The petition alleges that the claimed invention contributes to conservation of energy. The claims are generally directed to a method of providing information to a user.. The materiality standard does not permit an applicant to speculate as to how a hypothetical end-user might specially apply the invention in a manner that could contribute to more efficient utilization and conservation of energy resources. Providing information to a user does not provide more efficient utilization or conservation of energy resource and at best is considered speculate as to how a hypothetical end-user might specially apply the claimed invention

Any reconsideration of this decision should be submitted through the USPTO electronic filing system, EFS-Web, and selecting the document description of "Petition for Green Tech Pilot" on the EFS-Web screen.

Telephone inquiries concerning this decision should be directed to Lee W. Young at 571-272-4549.

The application is being forwarded to the Technology Center Art Unit 2611 for action in its regular turn.

Lee W. Young
Quality Assurance Specialist
Technology Center 2600